BORDER
POWER PLANT
WORKING GROUP

GRUPO DE TRABAJO DE
TERMOELECTRICAS
FRONTERIZAS

DOCKET
01-AFC-24C
DATE APR 3 2006
RECD. APR 4 2006

April 3, 2006

Connie Bruins, Compliance Project Manager
California Energy Commission
1516 Ninth Street, MS-2000
Sacramento, CA 95814

Subject: Opposition to Amendment to Palomar Energy Project License to Allow Use of Raw Water Back-Up for Cooling System

Dear Connie:

The use of raw water for back-up purposes constitutes a "*substantial change*" and "*new information*" under Public Resources Code Section 21166." As such the proposal constitutes "*illegal segmentation*" of the environmental review of the project and must be rejected.

The CEC is well aware of the reliability issues surrounding use of water in California power plants. The following excerpt is for the June 2001 Water Supply Issues Workshop Summary (p. 17-18, http://www.energy.ca.gov/siting/constraints/documents/2001-6-15_WATER_SUM.PDF):

> *In light of California's looming water supply crisis, the use of fresh or even potable water for power plant cooling poses issues that are ignored by the economic or California Environmental Quality Act (CEQA) criteria used by staff in past siting cases to determine the suitability of using alternative sources of cooling water or alternative cooling technology. For example, due to the greater capital cost and efficiency penalty associated with dry cooling, the reliance on economic criteria will almost always favor wet cooling and ignores long term reliability concerns as well as issues of protection of a limited resources. The greatest emphasis in such a policy should be given to the use of dry cooling because, although more expensive, dry cooling significantly reduces facilities' water demand, removes a major siting constraint and ensures facility reliability during emergencies and droughts.*

This document was submitted as an exhibit by me during the Palomar Energy evidentiary proceedings. The statement on p. 2 of the March 29, 2006 CEC analysis of the petition to use raw water as back-up, "During the siting proceeding, the reliability of the HARRF was undisputed," implies no concern was expressed over use of water at Palomar. That concern was expressed using the CEC's own documents were the CEC expresses concern over the reliability of power plant water supply reliability during emergencies and droughts. In the case of HARRF, the emergencies happen to be occurring in the reclaimed water production step.

On p. 1 of the CEC analysis the statement is made that, "*During a seven year period beginning in 1997, the HARRF experienced only three days of operational outages in recycled water*

production." This is incorrect. The HARRF did not produce one drop of recycled water in the seven years that began in 1997. The HARRF began production of 4 million gallons per day of recycled water in September 2004. This production was increased to the target 9 Mgd production rate in January 2006. The HARRF has essentially no reliability track record for recycled water production.

Conformance with LORS: The CEC states on p. 6 that:

> *To remain consistent with LORS, the use of raw water must be prohibited at all other times, as long as it is not "economically infeasible" to do so. Staff proposes that raw water use be allowed at the PEC during the summer and otherwise only during CAISO electrical system emergencies.*

Summer is the time of critical water shortages in California. To allow use of raw water in summer at Palomar, especially during a lengthy summertime outage of the HARRF recycled water system, could cause a shortfall in Escondido's daily water balance, as the CEC notes on p. 4. How is this in any way consistent with the LORS?

Alternative solutions to this problem must be found. One obvious alternative is to retrofit Palomar with a wet-dry cooling system to reduce overall water use by 80 to 90 percent or more during summertime operations. A feasible physical arrangement for air cooling at Palomar was presented as an exhibit in the Palomar evidentiary hearing and is provided as an attachment to this letter. The lifecycle cost of dry cooling at Palomar was also presented at the hearing and is essentially the same for wet or dry cooling. The cost comparison is provided as an attachment to this letter as well. The number of dry cells needed for a wet-dry retrofit would be less than the number (36) needed for a dry-only system. Somewhere between 24 and 30 cells would likely be needed to achieve an 80 to 90 percent water reduction at summertime operating conditions. The installed cost of this modification would likely be in the range of $25 to $30 million.

Palomar is now a utility-owned project. The plant will not be operating in a market-based environment as the CEC indicates on p. 7 of the petition analysis. The cost of this retrofit would be passed on to SDGE ratepayers. This retrofit would assure the plant is 100 percent reliable at all times without raw water back-up, even if the recycled water system is not operational.

The use of raw water for back-up purposes constitutes a "*substantial change*" and "*new information*" under Public Resources Code Section 21166." As such the proposal constitutes "*illegal segmentation*" of the environmental review of the project and must be rejected. The CEC was aware of the potential unreliability of the water supply at the time of the Palomar evidentiary hearings. The most appropriate response to this issue is a wet-dry cooling retrofit, not a potential compromising of the availability of raw water to Escondido during the critical summertime water demand period.

Best regards,

Bill Powers, P.E.

Bill Powers, P.E.
Chair, Border Power Plant Working Group

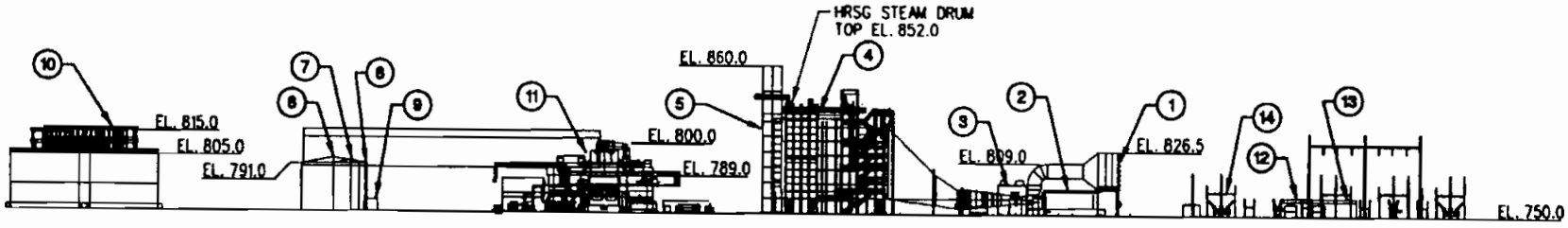

WEST ELEVATION
NOT TO SCALE

1

LEGEND

1. COMBUSTION TURBINE INLET FILTER
2. COMBUSTION TURBINE GENERATOR
3. COMBUSTION TURBINE
4. HEAT RECOVERY STEAM GENERATOR
5. HRSG STACK (110' H)
6. RAW WATER TANK (56' DIA. x 40' H)
7. DEMIN WATER TANK (30' DIA. x 40' H)
8. RO WATER TANK (15' DIA. x 40' H)
9. FIRE WATER PUMP HOUSE (12' x 25' x 10' H)
10. COOLING TOWER
11. STEAM TURBINE
12. GAS COMPRESSOR BLDG (50' x 65' x 15' H)
13. GAS METERING STATION
14. SWITCHYARD CONTROL BLDG (15' x 15' x 10' H)

ORIGINAL FIGURE 2.4-2

OBJECTS ARE NOT TO SCALE

(SOME LARGE OBJECTS – HRSG, AIR INLET FILTER HOUSING, COOLING TOWER BODY – ARE SHOWN AS SHORTER THAN THEIR ACTUAL HEIGHT)

Burns & McDonnell
SINCE 1898

date JUNE 26, 2001
designed S. ROTTINGHAUS

FIGURE 2.4-2
Elevation View

Palomar Energy Project

project 27085
contract

SK - ELEV-01

COPYRIGHT © 2001 BY BURNS & McDONNELL ENGINEERING COMPANY, INC.

U:\PWRCIVIL\1111\CADD\CIVIL\sempro\escndido\w_elev_01.dgn

08/06/01

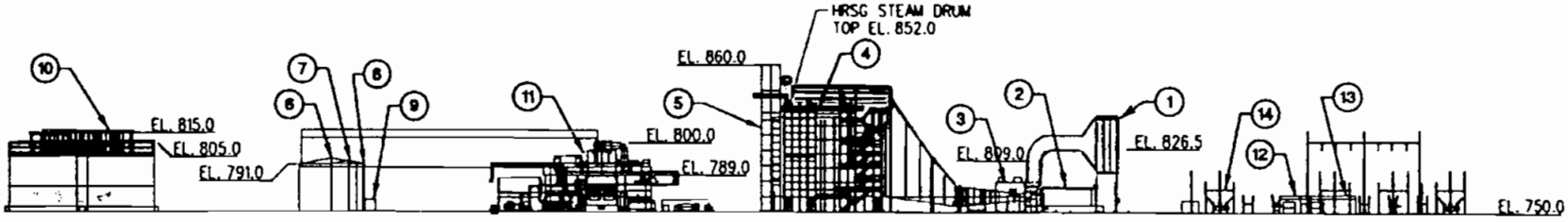

WEST ELEVATION
NOT TO SCALE

LEGEND

1. COMBUSTION TURBINE INLET FILTER
2. COMBUSTION TURBINE GENERATOR
3. COMBUSTION TURBINE
4. HEAT RECOVERY STEAM GENERATOR
5. HRSG STACK (110' H)
6. RAW WATER TANK (56' DIA. x 40' H)
7. DEMIN WATER TANK (30' DIA. x 40' H)
8. RO WATER TANK (15' DIA. x 40' H)
9. FIRE WATER PUMP HOUSE (12' x 25' x 10' H)
10. COOLING TOWER
11. STEAM TURBINE
12. GAS COMPRESSOR BLDG (50' x 65' x 15' H)
13. GAS METERING STATION
14. SWITCHYARD CONTROL BLDG (15' x 15' x 10' H)

PROPOSED WET TOWER CONFIGURATION

CORRECTED ELEVATION VIEW (EQUIPMENT IS TO SCALE)

VIEW FROM NORTH

1 CENTIMETER = 56.5 FEET

Burns & McDonnell
SINCE 1898

date JUNE 26, 2001
designed S. ROTTINGHAUS

Palomar Energy Project

FIGURE 2.4-2
Elevation View

project 27085
contract

SK - ELEV-01

COPYRIGHT © 2001 BY BURNS & McDONNELL ENGINEERING COMPANY, INC.

U:\PWRCIVIL\1111\CADD\CIVIL\sempra\escndido\w_elev_01.dgn

08/06/01

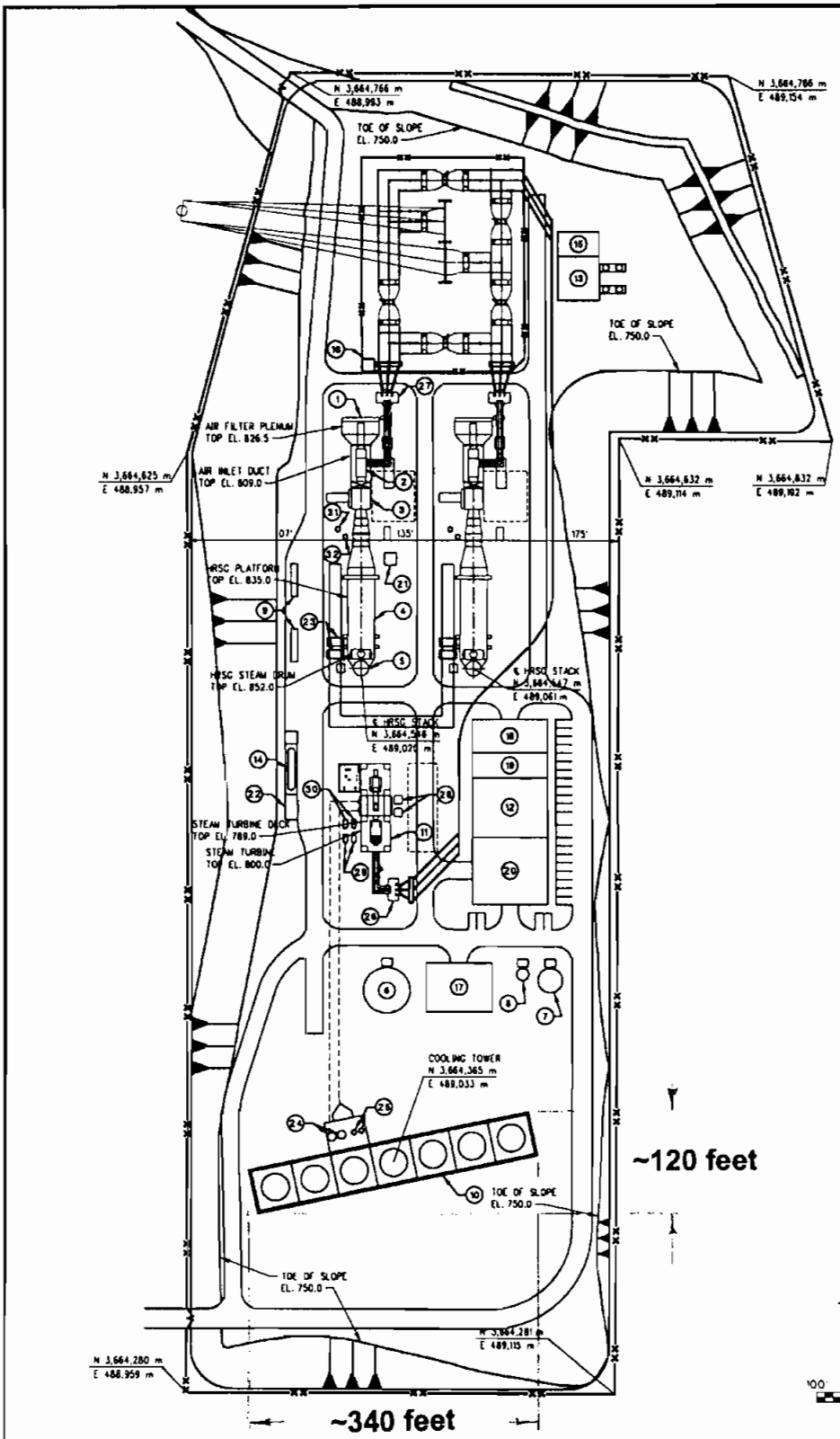

LEGEND

1. COMBUSTION TURBINE INLET FILTER
2. COMBUSTION TURBINE GENERATOR
3. COMBUSTION TURBINE
4. HEAT RECOVERY STEAM GENERATOR
5. HRSG STACK (110' H)
6. RAW WATER TANK (56' DIA. x 40' H)
7. DEMIN WATER TANK (30' DIA. x 40' H)
8. RO WATER TANK (15' DIA. x 40' H)
9. H2 AND N2 BULK TRAILER STORAGE
10. COOLING TOWER
11. STEAM TURBINE
12. ADMINISTRATION BUILDING (70' x 90' x 25' H)
13. GAS COMPRESSOR BLDG. (50' x 65' x 15' H)
14. AQUEOUS AMMONIA (19%) TANK (8'-3" DIA. x 50' L/20,000 GAL.)
15. GAS METERING STATION
16. SWITCHYARD CONTROL BLDG. (15' x 15' x 10' H)
17. WATER TREATMENT/COOLING TOWER CHEMICALS/ ELECTRICAL EQUIPMENT (60' x 80' x 25' H)
18. PROCESS (INCLUDING TREATMENT CHEMICALS) (40' x 90' x 25' H)
19. ELECTRICAL EQUIPMENT/CONTROL ROOM (30' x 90' x 25' H)
20. MAINTENANCE/WAREHOUSE (80' x 90' x 25' H)
21. COMPRESSOR WATER WASH SKID
22. AMMONIA SPILL IMPOUNDING
23. BOILER FEED PUMPS
24. CIRCULATING WATER PUMPS
25. AUXILIARY CIRCULATING WATER PUMPS
26. STEAM TURBINE GENERATOR STEP-UP TRANSFORMER
27. GAS TURBINE GENERATOR STEP-UP TRANSFORMER
28. CONDENSATE PUMPS
29. CLOSED COOLING WATER PUMPS
30. CLOSED COOLING WATER HEAT EXCHANGERS
31. FUEL GAS SCRUBBER/DRAINS TANK
32. WATER WASH DRAINS TANK

NOTE:
1. COORDINATES SHOWN ARE NAD 83 UTM, ZONE 11, METERS

100' 0 100 200
SCALE IN FEET

Burns & McDonnell
SINCE 1898

date JUNE 26, 2001
designed S. ROTTINGHAUS

FIGURE 2.4-1
Site Arrangement

Palomar Energy Project

project 27085
contract
SK - YGA1

COPYRIGHT © 2001 BY BURNS & McDONNELL ENGINEERING COMPANY, INC.
U:\PWRCIVIL\1111\CADD\CIVIL\sempra\eschd\ad\sem1g4_1.dgn

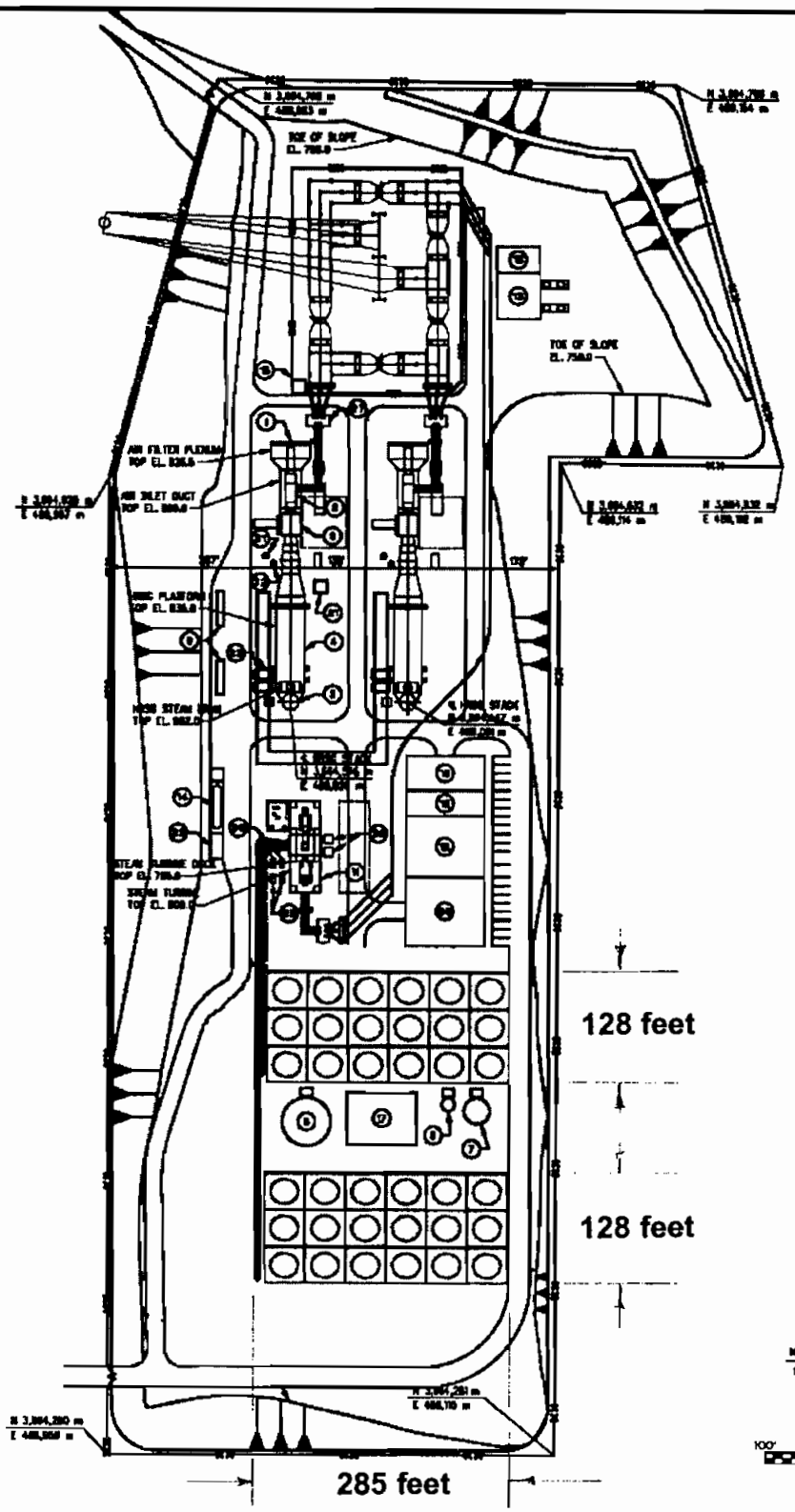

DRY COOLING ALT. 1

36 CELLS

TWO BLOCKS 3X6

75-FEET HEIGHT

LEGEND

1. COMBUSTION TURBINE INLET FILTER
2. COMBUSTION TURBINE GENERATOR
3. COMBUSTION TURBINE
4. HEAT RECOVERY STEAM GENERATOR
5. HRSG STACK (110' H)
6. RAW WATER TANK (50' DIA. x 40' H)
7. DEMIN. WATER TANK (30' DIA. x 40' H)
8. RO WATER TANK (15' DIA. x 40' H)
9. H2 AND N2 BULK TRAILER STORAGE
10. COOLING TOWER
11. STEAM TURBINE
12. ADMINISTRATION BUILDING (70' x 90' x 25' H)
13. GAS COMPRESSOR BLDG. (50' x 85' x 15' H)
14. AQUEOUS AMMONIA (19%) TANK (8'-3" DIA. x 50' L/20,000 GAL.)
15. GAS METERING STATION
16. SWITCHYARD CONTROL BLDG. (15' x 15' x 10' H)
17. WATER TREATMENT/COOLING TOWER CHEMICALS/ ELECTRICAL EQUIPMENT (60' x 60' x 25' H)
18. PROCESS (INCLUDING TREATMENT CHEMICALS) (40' x 90' x 25' H)
19. ELECTRICAL EQUIPMENT/CONTROL ROOM (30' x 90' x 25' H)
20. MAINTENANCE/WAREHOUSE (80' x 90' x 25' H)
21. COMPRESSOR WATER WASH SKID
22. AMMONIA SPILL IMPOUNDING
23. BOILER FEED PUMPS
24. CIRCULATING WATER PUMPS
25. AUXILIARY CIRCULATING WATER PUMPS
26. STEAM TURBINE GENERATOR STEP-UP TRANSFORMER
27. GAS TURBINE GENERATOR STEP-UP TRANSFORMER
28. CONDENSATE PUMPS
29. CLOSED COOLING WATER PUMPS
30. CLOSED COOLING WATER HEAT EXCHANGERS
31. FUEL GAS SCRUBBER/DRAINS TANK
32. WATER WASH DRAINS TANK

NOTE:
1. COORDINATES SHOWN ARE NAD 83 UTM, ZONE 11, METERS.

100' 0' 100' 200'
SCALE IN FEET

Burns & McDonnell

date JUNE 26, 2001
designed S. ROTTINGHAUS

FIGURE 2.4-1 ALT. 1
Site Arrangement

Palomar Energy Project

project 27085
contract

SK - YGA1

COPYRIGHT © 2001 BY BURNS & McDONNELL ENGINEERING COMPANY, INC.

U:\PWRCIVIL\1111\CADD\CIVIL\sempra\escndido\semfig4-1.dgn 07/19/01

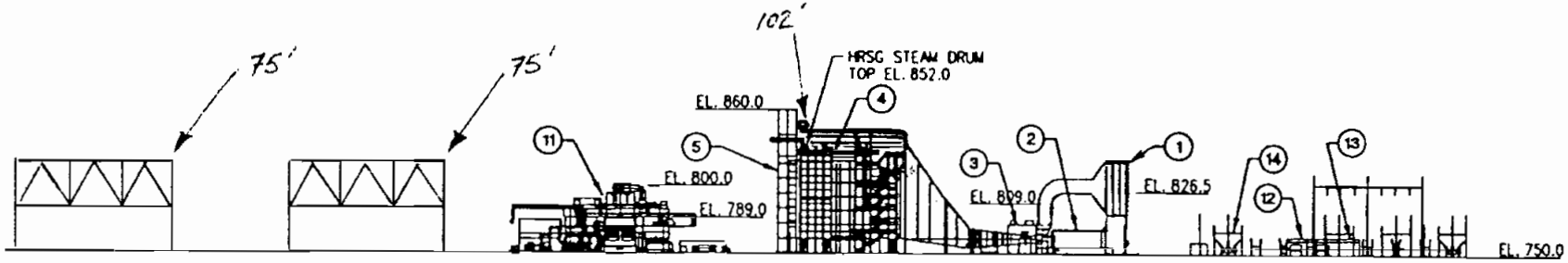

WEST ELEVATION
NOT TO SCALE

LEGEND

1. COMBUSTION TURBINE INLET FILTER
2. COMBUSTION TURBINE GENERATOR
3. COMBUSTION TURBINE
4. HEAT RECOVERY STEAM GENERATOR
5. HRSG STACK (110' H)
6. RAW WATER TANK (56' DIA. x 40' H)
7. DEMIN WATER TANK (30' DIA. x 40' H)
8. RO WATER TANK (15' DIA. x 40' H)
9. FIRE WATER PUMP HOUSE (12' x 25' x 10' H)
10. COOLING TOWER
11. STEAM TURBINE
12. GAS COMPRESSOR BLDG (50' x 65' x 15' H)
13. GAS METERING STATION
14. SWITCHYARD CONTROL BLDG (15' x 15' x 10' H)

75-FOOT DRY COOLING CONFIGURATION ALTERNATIVE

CORRECTED ELEVATION VIEW (EQUIPMENT IS TO SCALE)

VIEW FROM NORTH

1 CENTIMETER = 56.5 FEET

Burns & McDonnell
SINCE 1898

date JUNE 26, 2001
designed S. ROTTINGHAUS

Palomar Energy Project

FIGURE 2.4-2 ALT. 1
Elevation View

project 27085
contract

SK - ELEV-01

COPYRIGHT © 2001 BY BURNS & McDONNELL ENGINEERING COMPANY, INC

U:\PWRCIVIL\1111\CADD\CIVIL\sempro\escndd0\w_elev_01.dgn

08/06/01

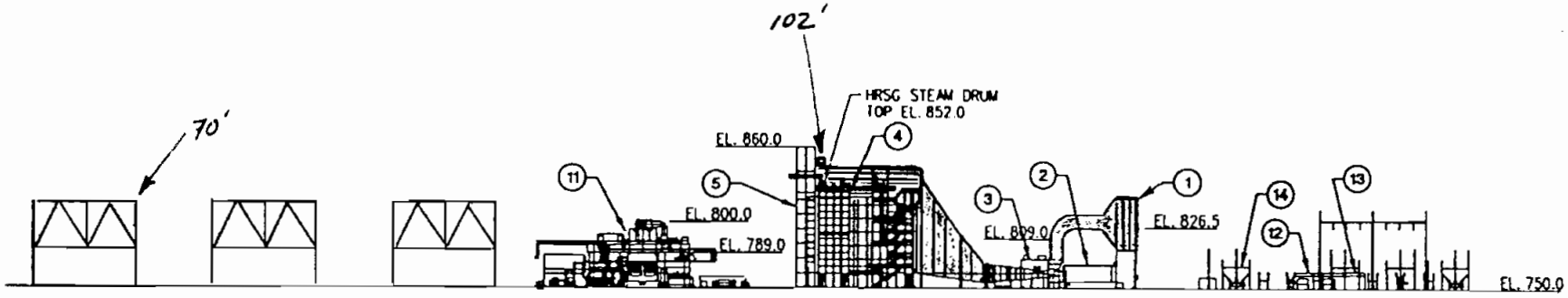

WEST ELEVATION
NOT TO SCALE

1

LEGEND

1. COMBUSTION TURBINE INLET FILTER
2. COMBUSTION TURBINE GENERATOR
3. COMBUSTION TURBINE
4. HEAT RECOVERY STEAM GENERATOR
5. HRSG STACK (110' H)
6. RAW WATER TANK (56' DIA. x 40' H)
7. DEMIN WATER TANK (30' DIA. x 40' H)
8. RO WATER TANK (15' DIA. x 40' H)
9. FIRE WATER PUMP HOUSE (12' x 25' x 10' H)
10. COOLING TOWER
11. STEAM TURBINE
12. GAS COMPRESSOR BLDG (50' x 65' x 15' H)
13. GAS METERING STATION
14. SWITCHYARD CONTROL BLDG (15' x 15' x 10' H)

70-FOOT DRY COOLING CONFIGURATION ALTERNATIVE

CORRECTED ELEVATION VIEW (EQUIPMENT IS TO SCALE)

VIEW FROM NORTH

1 CENTIMETER = 56.5 FEET

FIGURE 2.4-2 ALT. 2
Elevation View

Palomar Energy Project

Burns & McDonnell
SINCE 1898

date JUNE 26, 2001
designed S. ROTTINGHAUS

project 27085
contract

SK - ELEV-01

COPYRIGHT © 2001 BY BURNS & McDONNELL ENGINEERING COMPANY, INC.

U:\PWRCIVIL\1111\CADD\CIVIL\sempra\escondido\w_elev_01.dgn

03/06/01

Attachment A. Comparison of Cooling System Configuration, Capital, and O&M Costs[a]

Parameter	Proposed PEP Evaporative Cooling Tower	CEC Generic ACC	Optimized PEP ACC Using Otay Mesa Template[b]
Cooling System Configuration			
Cooling system height	65 ft., up to 40 ft. vapor plume in high humidity conditions	100 ft., no plume at any time	75 ft.[c], no plume at any time
Cooling system footprint	340 ft. by 55 ft., single block[d]	268 ft. by 191 ft., single 5x7 block	285 ft. by 128 ft. (each), two 3x6 blocks
Sound level, dBA	47 at 2,300 ft.	65 at 400 ft.	< 45 at 400 ft.
Capital Cost Estimates	**$14 to $18 million[e]**	**$30 to 35 million[f]**	**$30 million[g]**
O&M Cost Estimates			
Number of fans	7	35 - 40	36[h]
Fan power demand, kw	150	150	75
Parasitic load of fans, kw	1,050	5,250 – 6,000	2,700
Pump power demand, kw	1,790[i]	0	0
Parasitic power sum	2,840	5,250 – 6,000	2,700
Annual power cost at $0.03/kwh, with 90% capacity (7,884 hr/yr)	$670,000	$1,240,000 to $1,420,000	$640,000[j]
Water consumption	1.2×10^9 gal/yr (3,683 acre-ft/yr)	0	0
Unit water cost	$540/acre-ft	NA	NA
Annual water cost	$1,990,000	0	0
Annual cost of water treatment chemicals	$300,000[k]	0	0
Cooling system wastewater generation	0.3×10^9 gal/yr[l] (921 acre-ft/yr)	0	0
Annual cooling system wastewater disposal cost	not identified	0	0
ACC fuel efficiency penalty	base	1.77%	1.0 to1.5%[m]
Annual cost of fuel penalty	base	$1,300,000	$730,000 to $1,100,000
Sum of annual operating costs	$2,960,000	$2,540,000 to $2,720,000	$1,370,000 to $1,740,000
Cost Summary			
Capital Cost	$14 to $18 million	$30 to $35 million	$30 million
Present O&M worth (@ 8%, 30 years)	$33 million	$29 to $31 million	$15 to $20 million
Present worth	**$47 to $51 million**	**$59 to $66 million**	**$45 to $50 million**

Footnotes:

a. All costs shown in table are from pages 4.9-A33 to 4.9-A36 of FSA unless otherwise indicated.
b. All data from Exhibit 112. All three principal manufacturers of ACCs for power plants confirmed that a 36-cell ACC equipped with ultra-low noise 100 hp fans would maintain steam turbine backpressure at well under 8 inches Hg at maximum representative 1-hour site temperature of 101 °F.
c. A 70-foot overall height can readily be achieved by splitting the ACC into three 2x6 blocks. There is ample space at the PEP site for either the two 3x6 block ACC configuration or the three 2x6 block ACC configuration.
d. Figure 2.4-1, Application for Certification (Exhibit 1)
e. Applicant estimates a capital cost of approximately $18 million (Exhibit 90). The CEC generic evaporative tower estimate of $14 million.
f. Applicant estimated a cost of $31.5 million for the ACC (Exhibit 90).
g. Delivered equipment cost estimated at $600,000 per cell by Hamon Dry Cooling (Exhibit 112). Fifty (50) percent adder assumed for union labor installation, for an installed cost of $32 million. A $2 million credit is assumed for the less complex steam turbine used with the air-cooled condenser (Exhibit 96). Net installed capital cost of the air-cooled condenser alternative is $30 million.
h. Sempra Energy also estimates that 36 ACC cells would be necessary for the site (Exhibit 35).
i. The FSA incorrectly assumes the evaporative cooling tower proposed at PEP is a conventional tower. The proposed tower is a plume abatement tower with twice the pump head of conventional tower (55 ft. vs. 27 ft.). For this reason, pump power demand is double (1,790 kw) the FSA estimate of 895 kw.
j. Note there is essentially no difference in parasitic load between the wet cooling and optimized ACC options, therefore there is no lost revenue due to a parasitic load differential.
k. Palomar 2002b, submitted to CEC on November 14, 2002 (Exhibit 90).
l. April 2003 rebuttal response of Donald Shilling states four cycles of concentration will be used at PEP (ratio of makeup reclaimed water to cooling tower wastewater discharge is 4 to 1) – Exhibit 35.
m. CEC estimate of ACC fuel efficiency penalty at Sutter Power Plant Project is 1.5 percent (Exhibit 85). The Sutter ACC operates in a much hotter summertime climate regime than the Palomar site (Exhibit 96). It is reasonable to assume that the annual thermal efficiency penalty at Palomar will be significantly less than that at Sutter if an equally robust air-cooled condenser is used at Palomar. A 1.0 percent annual thermal efficiency penalty is assumed to represent the best case scenario for ACC thermal efficiency penalty at Palomar for the purposes of calculating the cost impact of the fuel efficiency penalty.