CITY OF BURBANK
COMMUNITY DEVELOPMENT DEPARTMENT
275 East Olive Avenue, P.O. Box 6459, Burbank, California 91510-6459
www.ci.burbank.ca.us

DOCKET
01-AFC-6C
DATE OCT 14 2008
RECD. OCT 20 2008

October 14, 2008

Ron Yasny
Compliance Project Manager
Energy Facilities Siting Division
California Energy Commission
1516 9th St. Mail Stop 2000
Sacramento, CA 95814-5512
(916) 651-1227

SUBJECT: Final Report on Work to Modify Magnolia Power Project with Additional Safety Platforms, Stairs and Ladders to Aid Maintenance Access to Plant Equipment

Mr. Yasny,

On August 9, 2007, the California Energy Commission received a petition from the Southern California Public Power Authority to modify the Magnolia Power Project by adding safety platforms, stairs, and ladders to aid in access for maintenance. On August 29, 2007 the Energy Commission issued a "Notice of Insignificant Project Change for Additional Safety Platforms for the Magnolia Power Project (01-AFC-6C)."

On September 24, 2007 word was received from the City of Burbank Attorney's Office that the CEC had agreed that Burbank's Building Division could function as the "CBO" (chief building official) for this platform work and all that would be necessary is for the "CBO" to submit a report to the CEC at the end of the project in the manner specified in MPP's conditions of approval. Thus the City's Building Division was authorized by the CEC to issue a permit for this project, conduct inspections, and issue the necessary certificate when it's finished. In February 2008, when asked about the form and content of the report to the CEC at the end of the project, you advised (in an email to Scott Galati, the Licensing Attorney for Magnolia Power Project) that "a copy of whatever 'final' the City is using would suffice."

This transmittal is to convey the completion status of this work to modify the Magnolia Power Project by adding safety platforms, stairs, and ladders to aid access for maintenance. The Building Division at the City of Burbank did collect fees, issue a Building Permit (No. BS07-12001), perform a plan check on the design, complete construction inspections, and did issue on October 1, 2008 a 'Final Permit approving the completion of this Work.

Attached for your reference and your records, please find the appropriate submittals related to the plan check, construction inspections, and the final building permit, as follows:

- Final Building Permit with the Inspection Record
- Deputy Inspector's Final Report with all the Inspector's Daily Reports
- Plan Check Correspondence

Please advise if additional information or clarification is needed.

Sincerely yours,

Thomas Zartl, A.I.A.
Senior Building Inspector
Building Division
City of Burbank

DEPARTMENT OF COMMUNITY DEVELOPMENT
BUILDING DIVISION
275 East Olive Ave.
Burbank, Calif. 91510

Permit No : **BS0712001**
Permit Status : Permit Final
Plan Check Status : PC Approved

10/01/2008

Building Permit

Job Address: **164 W MAGNOLIA BLVD**

PRE : bjohnston
Entered By : tsloan

Project No	070007269	Applied	: 12/03/2007
Activity Type	Building	Issued	: 02/21/2008
Project Name	Building	Completed	: 10/01/2008
Parcel Number		To Expire	: 03/30/2009
Project Description	Building		
Base Address	164 W MAGNOLIA BLVD		
Valuation	$690,600.00		
Job Description	Safety Platforms for MPP		
Owner	City of Burbank Lic. (818)238-5795 164 W Magnolia Burbank CA 91502		

Fees

Fee Description	Account	Units	Fee/Units	Amount	Paid
Building Permit Fee		690,600		$3,360.20	$3,360.20
Strong Motion - Commercial			$0.00	$138.12	$138.12
Plan Archive Fee (per Sheet)		16	$2.50	$40.00	$40.00
Building Plan Check Fee		690,600		$2,107.35	$2,107.35

Plan Check		Permit		Total	
Fees:	$2,107.35	Fees:	$3,538.32	Fees:	$5,645.67
				Adjustments:	$0.00
Payments:	$2,107.35	Payments:	$3,538.32	Payments:	$5,645.67
				Extend Credit:	$0.00
Balance Due:	$0.00	Balance Due:	$0.00	Balance Due:	$0.00

Date	Transaction Type	Method	Amount
01/10/2008	Payment of Balance Due	check	$5,645.67

Conditions

NPDES CERTIFICATION: National Pollution Discharge Elimination System (NPDES) is the portion of the Clean Water Act that applies to protection of receiving waters. Under permits from the Los Angeles regional Water Quality Control Board (RWQCB), certain activities are subject to RWQCB enforcement. To meet the requirements of the Los Angeles County Municipal Storm water Permit (CAS614001), the City of Burbank has adopted minimum requirements for storm water runoff management from development construction activities. These include requirements for sediment control, erosion control, and construction activities control to be implemented on each project site.

In compliance with the above requirements, I certify that I understand and will comply with the minimum requirements noted above.

Signature of Applicant

CONSTRUCTION FENCING AND DEBRIS: All construction sites shall be fenced and secured. All construction debris shall be stored and contained so as not to create a public nuisance.

DIG ALERT: The permit applicant is responsible for verifying that all utilities have been disconnected prior to starting demolition.

10.1.08

FINAL

DEPARTMENT OF COMMUNITY DEVELOPMENT
BUILDING DIVISION
275 East Olive Ave.
Burbank, Calif. 91510

Permit No : **BS0712001**
Permit Status : Permit Final
Plan Check Status : PC Approved

10/01/2008

Building Permit

Job Address: **164 W MAGNOLIA BLVD**

PRE : bjohnston
Entered By : tsloan

Call Underground Service Alert of Southern California (DigAlert) at: 800-227-2600.

INSPECTION REQUIREMENTS: Approval of the plans or issuance of any permit does not preclude any additional submittals required by the Building Inspector.

PLANS ON SITE: The approved set of plans, specifications and job card must be at job site during construction and available to the building inspector. It is unlawful to alter or change the approved plans, or deviate there from, without approval of the Building Division. The stamping of the plans and specifications shall not be held to permit or to be an approval of the violation of any provision of the City Ordinance or State law. The approval does not waive any required approvals from other Divisions, Departments, and Agencies having jurisdiction.

STORMWATER POLLUTION PREVENTION: All Construction Best Management Practices must be installed prior to, and maintained during, construction. These include requirements for sediment control, erosion control, and construction activities control to be implemented on each project site.

CONSTRUCTION HOURS: The project shall comply with the following construction hour restrictions: 1) All projects other than single-family residential construction, within 500 ft. of any residential zone: Monday-Friday 7am-7pm; Saturday 8am-5pm; Sunday and Holidays Not Allowed; 2) Single-family residential construction: 7am-10pm.

INSPECTION REQUEST: To request an inspection call 818-238-5220 between 8am-5pm Monday-Friday. The permit number must be provided when requesting an inspection.

PLAN APPROVAL: Plans are in full compliance with relevant building codes of the City of Burbank, and the Building Official issues the building permit solely on that finding. Neither the Building Official not the City of Burbank has made a determination whether the plans comply with other State or Federal laws or private contractual and/or property rights.

CITY OF BURBANK, CALIFORNIA

COMMUNITY DEVELOPMENT DEPARTMENT/BUILDING DIVISION, 150 N THIRD ST, BURBANK,CA 91502

INSPECTION RECORD

NOTICE – THIS CARD MUST BE POSTED AT FRONT OF JOB IN PLAIN SIGHT

JOB ADDRESS	164 W. MAGNOLIA
OWNER	WATER & POWER
CONTRACTOR	
TYPE OF IMPROVEMENT	SAFETY PLATFORMS FOR MPP
BUILDING PERMIT #	BS 07 - 12001
DATE ISSUED	2.21.08

EXTENDED HOURS FOR INSPECTION REQUESTS USING FAX 818 238 5242
INTERNET, GO TO: www.burbankca.org/building
BUILDING DIVISION INSPECTIONS VIA PHONE: CALL 818 238 5220 8:00 AM TO 5:00 PM MONDAY THRU FRIDAY
BUILDING INSPECTORS OFFICE HOURS 7:15 TO 8:00 AM AND FROM 3:00 TO 3:30 PM

CALL FOR INSPECTION IN THE ORDER LISTED BELOW

	INITIAL	DATE
BUILDING LOCATION/SETBACKS		
GRADING		
TRENCHES/STEEL	TAZ	6.3.08
UNDERFLOOR SLAB/FLOOR PLUMBING		
UNDER SLAB CONDUIT		
SLAB		
OTHER (SPECIFY)		
DO NOT POUR UNTIL ABOVE SIGNED		
FLOOR FRAMING		
UNDER FLOOR INSULATION		
OTHER (SPECIFY)		
DO NOT SHEATH FLOOR UNTIL ABOVE SIGNED		
PRE-REROOF INSPECTION		
FLOOR SHEATHING		
ROOF SHEATHING		
DO NOT INSTALL ROOF COVERING UNTIL ABOVE SIGNED		
ROUGH PLUMBING		
ROUGH HEATING/AIR CONDITIONING		
ROUGH ELECTRIC WALLS		
ROUGH ELECTRICAL CEILINGS		
FIRE SPRINKLERS		
ROUGH FRAMING		
OTHER (SPECIFY)		
OK TO COVER EXTERIOR		
DO NOT COVER EXTERIOR UNTIL ABOVE SIGNED		
T-BAR CEILING		
INSULATION		
OTHER (SPECITY)		
DO NOT COVER INTERIOR/DROP TILE UNTIL ABOVE SIGNED		
MASONRY – 1ST LIFT		
MASONRY – 2ND LIFT		
MASONRY – 3RD LIFT		
EXTERIOR LATH		
OTHER (SPECIFY)		
INTERIOR LATH/DRYWALL		
DO NOT PLASTER UNTIL ABOVE SIGNED		
EXTERIOR SCRATCH		
SANDBLAST		
EXTERIOR BROWN		
OTHER (SPECIFY)		

MISCELLANEOUS INSPECTIONS

	INITIAL	DATE
SHOWER PAN		
TEMPORARY POWER POLE		
SEWER		
OTHER (SPECIFY)		
FINAL INSPECTIONS		
OK TO OCCUPY		
FINAL GRADING		
FINAL GAS/GAS TEST		
FINAL PLUMBING		
FINAL HEATING/AIR CONDITIONING		
FINAL ELECTRICAL		
FINAL BWP APPROVAL		
FINAL FIRE DEPARTMENT APPROVAL		
FINAL LANDSCAPING/PLANNING		
FINAL BUILDING	TAZ	10.1.08

CITY OF BURBANK FIRE DEPARTMENT
311 E ORANGE GROVE AVE
FOR FIRE DEPT. INSPECTION CALL 818 238 3473
INSPECTORS OFFICE HOURS: 7:30-9:00 AM & 1:00-4:00 PM

FIRE SPRINKLERS/STANDPIPES		
WELD INSPECTION		
UNDERGROUND PIPING		
UNDERGROUND HYDRO		
UNDERGROUND FLUSH		
OVERHEAD HYDRO-ROUGH		
FD OK TO RELEASE UTILITIES		
OTHER (SPECIFY)		
OTHER (SPECIFY)		
FINAL FIRE PERMIT INSPECTIONS		
FIRE SPRINKLERS/STANDPIPES		
DRY CHEMICAL/HALON		
FIRE ALARM SYSTEM		
UNDERGROUND TANK		
HAZADOUS MATERIALS		
(AHM HANDLER/RMPP) KNOX BOX & KEYS		
FD-7A COMPLETED		
OTHER (SPECIFY)		
OTHER (SPECIFY)		
COMPLETED FIRE DEPARTMENT PERMIT		

B220-27 rev.2/01
Revised May/2008

CITY OF BURBANK, BUILDING DIVISION - INSPECTION RECORD

ADDRESS: 164 W. MAGNOLIA PERMIT #: BS07-12001

PROJECT/FLOOR/SUITE: SAFETY PLATFORM @ POWER PLANT

ADDITIONAL PERMITS	HVAC	PLUMBING	ELECTRICAL	BUILDING

DATE	INSPECTOR	INSPECTION / COMMENTS
2.25.08	TAZ	- PRE-CONSTRUCTION MEETING-
2.29.08	TAZ	- TOUR OF CONSTRUCTION AREA-
6.3.08	TAZ	- PAD @ STAIRS - OK
10.1.08	TAZ	- FINAL BLDG - OK

PERMIT #: BS07-12001 PROJECT/FLOOR/SUITE: SAFETY PLATFORMS ADDRESS: 164 W. MAGNOLIA

ADDRESS: 164 W. MAGNOLIA PLATFORMS SAFETY PROJECT/FLOOR/SUITE: PERMIT #: BS07-12001

DICK NIGRA INSPECTIONS, INC.

4735 Oakado Place
La Canada, CA 91011

Phone (818) 957-2759
Fax (818) 957-2885
Cell (818) 326-4291

REGISTERED INSPECTOR'S DAILY REPORT

Date August 28, 2008

TYPE OF INSPECTION REQUIRED			
	☐ Reinforced concrete	☐ Structural Steel Assembly	☐ Gunite
	☐ Post Tensioned Concrete	x Welding	☐ Epoxy
	☐ Reinforced Masonry	☐ Spray-Applied Fireproofing	☐ Other

Job Address	164 W. Magnolia Blvd.	City	Burbank
Job Name	Magnolia Power Plant	Permit No BS0712001	Issued By Burbank
Owner	Burbank Water & Power	Architect	
Material Description (type, grade, source)		Engineer	Black & Veatch
		Contractor	RND Contractors
Inspector(s) Name	Dick Nigra Inspections Inc.	Subcontractor	

TEST PERFORMED

TYPE OF SAMPLE	SLUMP	QUANTITY IN SET	ADDITIONAL REMARKS ON SAMPLES

INSPECTION SUMMARY

FINAL REPORT – CERTIFICATE OF COMPLIANCE
Welding

Dick Nigra Inspections Inc. has conducted a thorough inspection as dictated by the approved plans, codes in effect and specifications concerning special inspection of this project. area of inspection was Welding.

I hereby certify that we have inspected to the best of our knowledge, and have found this work to comply with the approved plans, specifications and applicable sections of the governing building laws.

CERTIFICATION OF COMPLIANCE

I HEREBY CERTIFY THAT I HAVE INSPECTED TO THE BEST OF MY KNOWLEDGE ALL OF THE ABOVE REPORTED WORK UNLESS OTHERWISE NOTED I HAVE FOUND THIS WORK TO COMPLY WITH THE APPROVED PLANS, SPECIFICATIONS, AND APPLICABLE SECTIONS OF THE GOVERNING BUILDING LAWS

Richard Nigra
SIGNATURE OF REGISTERED INSPECTOR

Welding – Los Angeles City — P003255
SPECIALTY NUMBER — AGENCY

PAGE 1 OF 1

TIME IN	TIME OUT	REG. HOURS	O.T. HOURS	SAMPLES

All inspections based on a minimum of 4 hours and over 4 hours — 8 hour minimum.

Approved

Project Supervisor

DICK NIGRA INSPECTIONS, INC.

4735 Oakado Place
La Canada, CA 91011

Phone (818) 957-2759
Fax (818) 957-2885
Cell (818) 326-4291
Pager (818) 541-6467

REGISTERED INSPECTOR'S DAILY REPORT

Date: 3-19-08

TYPE OF INSPECTION REQUIRED			
	☐ Reinforced concrete	☐ Structural Steel Assembly	☐ Gunite
	☐ Post Tensioned Concrete	☒ Welding	☐ Epoxy
	☐ Reinforced Masonry	☐ Spray-Applied Fireproofing	☐ Other

Job Address: 164 W. MAGNOLIA BLVD.	City: BURBANK
Job Name: MAGNOLIA POWER PROJECT	Permit No: / Issued By: BURBANK
Type of Structure: STRUCTURE FOR PLATFORM ACCESS	Architect:
Material Description (type, grade, source): A36	Engineer:
	Contractor: RND
Inspector(s) Name: BILL FOSTER	Subcontractor:

TEST PERFORMED

TYPE OF SAMPLE	SLUMP	QUANTITY IN SET	ADDITIONAL REMARKS ON SAMPLES

INSPECTION SUMMARY

OBSERVED WELDING OF FILLET WELDS OF (2) POSTS TO STEEL BEAMS. 5/16" FILLET WELDS. ALL AT UPPERMOST SHERKER ACCESS PLATFORMS. POSTS ARE W10x49

OBSERVED SOME DRILLING OF HOLES FOR A325 BOLTS.

CERTIFICATION OF COMPLIANCE

I HEREBY CERTIFY THAT I HAVE INSPECTED TO THE BEST OF MY KNOWLEDGE ALL OF THE ABOVE REPORTED WORK UNLESS OTHERWISE NOTED. I HAVE FOUND THIS WORK TO COMPLY WITH THE APPROVED PLANS, SPECIFICATIONS, AND APPLICABLE SECTIONS OF THE GOVERNING BUILDING LAWS.

Bill Foster
SIGNATURE OF REGISTERED INSPECTOR

IAC 8309089 NIGRA INSPECTION
SPECIALTY NUMBER AGENCY

PAGE ____ OF ____

TIME IN	TIME OUT	REG. HOURS	O.T. HOURS	SAMPLES
7:00	3:00	8.0		

All inspections based on a minimum of 4 hours and over 4 hours — 8 hour minimum

Approved: _____
Project Supervisor

DICK NIGRA INSPECTIONS, INC.

4735 Oakado Place
La Canada, CA 91011

Phone (818) 957-2759
Fax (818) 957-2885
Cell (818) 326-4291
Pager (818) 541-6467

REGISTERED INSPECTOR'S DAILY REPORT

Date: 3-20-08

TYPE OF INSPECTION REQUIRED			
	☐ Reinforced concrete	☐ Structural Steel Assembly	☐ Gunite
	☐ Post Tensioned Concrete	☑ Welding	☐ Epoxy
	☐ Reinforced Masonry	☐ Spray-Applied Fireproofing	☐ Other

Job Address: 1649 W. MAGNOLIA BLVD.	City: BURBANK
Job Name: MAGNOLIA POWER PROJECT	Permit No: / Issued By: BURBANK
Type of Structure: STRUCTURE FOR PLATFORM ACCESS	Architect:
Material Description (type, grade, source): A 36	Engineer: L. KASHKA / BLACK & VEATCH
	Contractor: RND
Inspector(s) Name: BILL FOSTER	Subcontractor:

TEST PERFORMED

TYPE OF SAMPLE	SLUMP	QUANTITY IN SET	ADDITIONAL REMARKS ON SAMPLES

INSPECTION SUMMARY

3-20-08 SILENCER ACCESS PLATFORMS
OBSERVED SOME SMALL WIDTH SECTIONS OF
HANDRAILS BEING WELDED AND FITTED AT
UPPERMOST PLATFORM.

OBSERVED W10x49 STEEL POSTS WITH 5/16"
FILLET WELDS TO MAIN STEEL BEAMS.

ELECTRODES NR232 (E71T-8)

CERTIFICATION OF COMPLIANCE

I HEREBY CERTIFY THAT I HAVE INSPECTED TO THE BEST OF MY KNOWLEDGE ALL OF THE ABOVE REPORTED WORK UNLESS OTHERWISE NOTED. I HAVE FOUND THIS WORK TO COMPLY WITH THE APPROVED PLANS, SPECIFICATIONS, AND APPLICABLE SECTIONS OF THE GOVERNING BUILDING LAWS.

Bill Foster
SIGNATURE OF REGISTERED INSPECTOR

KC 0809089 NIGRA INSPECTION
SPECIALTY NUMBER AGENCY

PAGE ____ OF ____

TIME IN	TIME OUT	REG. HOURS	O.T. HOURS	SAMPLES
7:00	3:30	8.0		

All inspections based on a minimum of 4 hours and over 4 hours — 8 hour minimum

Approved: [illegible] 3/20/08
Project Supervisor

DICK NIGRA INSPECTIONS, INC.

4735 Oakado Place
La Canada, CA 91011

Phone (818) 957-2759
Fax (818) 957-2885
Cell (818) 326-4291
Pager (818) 541-6467

REGISTERED INSPECTOR'S DAILY REPORT

Date: 3-21-08

TYPE OF INSPECTION REQUIRED			
	☐ Reinforced concrete	☐ Structural Steel Assembly	☐ Gunite
	☐ Post Tensioned Concrete	☒ Welding	☐ Epoxy
	☐ Reinforced Masonry	☐ Spray-Applied Fireproofing	☐ Other

Job Address: 164 W. MAGNOLIA BLVD.	City: BURBANK
Job Name: MAGNOLIA POWER PROJECT	Permit No: B50712001 — Issued By:
Type of Structure: STRUCTURE PLATFORM ACCESS	Architect:
Material Description (type, grade, source): A36	Engineer: LAKASHKA / BLACK & VEATCH
	Contractor: RND
Inspector(s) Name: BILL FOSTER	Subcontractor:

TEST PERFORMED

TYPE OF SAMPLE	SLUMP	QUANTITY IN SET	ADDITIONAL REMARKS ON SAMPLES

INSPECTION SUMMARY

3-21-08 - SILENCER ACCESS PLATFORM
- OBSERVED CLIP ANGLES WELDED TO NEW BEAM AND MISC. WT BOLTED TO BEAM.

- MAINTENCE PLATFORM - SHEET 145348-S1085
- OBSERVED WT 3½" ON EXISTING W12 x 30 WELDED TO C8x11.5 AT TOP AREA ON SIDE OF BEAM. NEW 5W x 35 MONORAIL BEAM WELDED EACH END TO LOWER PORTION OF C 8 x 11.5.
- ALL WELD NOT COMPLETE. FINISH ON 3-24-08

CERTIFICATION OF COMPLIANCE

I HEREBY CERTIFY THAT I HAVE INSPECTED TO THE BEST OF MY KNOWLEDGE ALL OF THE ABOVE REPORTED WORK UNLESS OTHERWISE NOTED. I HAVE FOUND THE WORK TO COMPLY WITH THE APPROVED PLANS, SPECIFICATIONS, AND APPLICABLE SECTIONS OF THE GOVERNING BUILDING LAWS.

Bill Foster
SIGNATURE OF REGISTERED INSPECTOR

ICC 0869089 NIGRA INSPECTION
SPECIALTY NUMBER — AGENCY

PAGE ____ OF ____

TIME IN	TIME OUT	REG. HOURS	O.T. HOURS	SAMPLES
700	330	8.0		

All inspections based on a minimum of 4 hours and over 4 hours — 8 hour minimum.

Approved: [signature] 3/21/08
Project Supervisor

DICK NIGRA INSPECTIONS, INC.

4735 Oakado Place
La Canada, CA 91011

Phone (818) 957-2759
Fax (818) 957-2885
Cell (818) 326-4291
(818) 541-6467

REGISTERED INSPECTOR'S DAILY REPORT

Date 6-27-08 FRI

TYPE OF INSPECTION REQUIRED			
	☐ Reinforced concrete	☐ Structural Steel Assembly	☐ Gunite
	☐ Post Tensioned Concrete	☒ Welding	☐ Epoxy
	☐ Reinforced Masonry	☐ Spray-Applied Fireproofing	☐ Other

Job Address: 320 N. LAKE ST	City: BURBANK
Job Name: MAGNOLIA POWER PLANT	Permit No / Issued By
Type of Structure: STAIRWAY CATWALK & LADDER SYSTEMS	Architect: AKER KVAERNER
Material Description (type, grade, source)	Engineer: BLACK & VEATCH
	Contractor: RND CONTRACTORS
Inspector(s) Name: MARK S. MILLERON 626-833-3415	Subcontractor

TEST PERFORMED

TYPE OF SAMPLE	SLUMP	QUANTITY IN SET	ADDITIONAL REMARKS ON SAMPLES

INSPECTION SUMMARY

OBSERVED WELDING OF VARIOUS PLATFORM, CATWALK, STAIRWAY AND LADDER SYSTEMS AS FOLLOWS:

AT CONDENSER WATER BOX ACCESS PLATFORM NEXT TO THE STEAM CONDENSER: FILLET WELDS ALL AROUND BASE PLATES (2) TO EXISTING WIDE FLANGE BEAM AT MID PLATFORM.

AT UPPER PLATFORM FILLET WELDS ALL AROUND 7" CHANNEL CROSSMEMBERS TO 12" CHANNEL PERIMETER. ALL GALVANIZED MATERIAL

WELDING PERFORMED BY MARCO SERRANO AWS

PROCESS USED: FCAW

ELECTRODE USED: E71T-8 LINCOLN NR 232 .072

ABOVE WORK IN PROGRESS

MARK S. MILLERON
CWI 95011101
EXP 1/10

PAGE 1 OF 1

CERTIFICATION OF COMPLIANCE

I HEREBY CERTIFY THAT I HAVE INSPECTED TO THE BEST OF MY KNOWLEDGE ALL OF THE ABOVE REPORTED WORK UNLESS OTHERWISE NOTED. I HAVE FOUND THIS WORK TO COMPLY WITH THE APPROVED PLANS, SPECIFICATIONS, AND APPLICABLE SECTIONS OF THE GOVERNING BUILDING LAWS.

SIGNATURE OF REGISTERED INSPECTOR

CWI 95011101 AWS

SPECIALTY NUMBER AGENCY

TIME IN	TIME OUT	REG. HOURS	O.T. HOURS	SAMPLES
6:30	1:30	8 PV	—	—

All inspections based on a minimum of 4 hours and over 4 hours — 8 hour minimum

Approved: Project Supervisor

DICK NIGRA INSPECTIONS, INC.

4735 Oakado Place
La Canada, CA 91011

Phone (818) 957-2759
Fax (818) 957-2885
Cell (818) 326-4291
(818) 541-6467

REGISTERED INSPECTOR'S DAILY REPORT

Date 6-30-08 MON

TYPE OF INSPECTION REQUIRED			
	❑ Reinforced concrete	❑ Structural Steel Assembly	❑ Gunite
	❑ Post Tensioned Concrete	☒ Welding	❑ Epoxy
	❑ Reinforced Masonry	❑ Spray-Applied Fireproofing	❑ Other

Job Address: 320 No. LAKE ST	City: BURBANK
Job Name: MAGNOLIA	Permit No / Issued By
Type of Structure: PLATFORMS, CATWALKS, STAIRWAYS, LADDERS	Architect: AKER KVAERNER
Material Description (type, grade, source)	Engineer: BLACK & VEATCH
	Contractor: RND CONTRACTORS
Inspector(s) Name: MARK S. MILLETRON 626-833-3415	Subcontractor

TEST PERFORMED

TYPE OF SAMPLE	SLUMP	QUANTITY IN SET	ADDITIONAL REMARKS ~~ON SAMPLES~~
			WELDING PERFORMED BY MARCO SERRANO
			PROCESS USED FCAW, E71T-8 NR 232
			PROCESS USED SMAW, E7018 WITH OVEN

INSPECTION SUMMARY

OBSERVED WELDING OF VARIOUS PLATFORMS, CATWALKS, STAIRWAYS, AND LADDER SYSTEMS AS FOLLOWS

AT CT GENERATOR NEW ACCESS LADDER WELDING OF ATTACHMENT CLIPS, 4X4 ANGLE SUPPORT LEG - FILLET WELDS

4X4 TUBE STEEL HORIZONTAL SUPPORT TO EXISTING STRUCTURE FLARE GROOVE

AT CONDENSER WATER BOX NEXT TO THE STEAM CONDENSER

LOW PLATFORM 4X4 ANGLE SUPPORT LEGS (2) - FILLET WELDS

TALL ACCESS LADDER - ATTACHMENT CLIPS

AT 2ND AREA PLATFORM

4X4 ANGLE SUPPORT LEGS (2) FILLET WELDS

ABOVE WORK IN PROGRESS

MARK S. MILLETRON
CWI 95011101
QC1 EXP. 1/10

CERTIFICATION OF COMPLIANCE

I HEREBY CERTIFY THAT I HAVE INSPECTED TO THE BEST OF MY KNOWLEDGE ALL OF THE ABOVE-REPORTED WORK UNLESS OTHERWISE NOTED. I HAVE FOUND THIS WORK TO COMPLY WITH THE APPROVED PLANS, SPECIFICATIONS, AND APPLICABLE SECTIONS OF THE GOVERNING BUILDING LAWS.

SIGNATURE OF REGISTERED INSPECTOR

CWI 95011101 — SPECIALTY NUMBER
AWS — AGENCY

PAGE 1 OF 1

TIME IN	TIME OUT	REG. HOURS	O.T. HOURS	SAMPLES
6:30	1:50	8.0		

All inspections based on a minimum of 4 hours and over 4 hours — 8 hour minimum

Approved _____ Project Supervisor

DICK NIGRA INSPECTIONS, INC.

4735 Oakado Place
La Canada, CA 91011

Phone (818) 957-2759
Fax (818) 957-2885
Cell (818) 326-4291
(818) 541-6467

REGISTERED INSPECTOR'S DAILY REPORT

Date 7-1-08 TUE

TYPE OF INSPECTION REQUIRED			
	☐ Reinforced concrete	☐ Structural Steel Assembly	☐ Gunite
	☐ Post Tensioned Concrete	☒ Welding	☐ Epoxy
	☐ Reinforced Masonry	☐ Spray-Applied Fireproofing	☐ Other

Job Address: 520 N. LAKE ST	City: BURBANK
Job Name: MAGNOLIA POWER PLANT	Permit No / Issued By
Type of Structure: PLATFORMS, CATWALKS, STAIRWAYS, LADDERS	Architect: AKER KVAERNER
Material Description (type, grade, source)	Engineer: BLACK & VEATCH
	Contractor: RND CONTRACTORS
Inspector(s) Name: MARK S. MILLERON 626-833-3415	Subcontractor

TEST PERFORMED

TYPE OF SAMPLE	SLUMP	QUANTITY IN SET	ADDITIONAL REMARKS ON SAMPLES

MARK S. MILLERON
CWI 95011101
QC1 EXP. 1/10

INSPECTION SUMMARY

OBSERVED WELDING OF STAIR LANDINGS AND 4X4 ANGLE SUPPORT LEGS ON ZLD AREA ACCESS STAIRWAYS
ALSO WELDING OF UPPER LANDING TO EXISTING STRUCTURE, WELDING OF RAILINGS AND WELDING OF GROUND LEVEL BASE PLATES, WORK INCOMPLETE RAILINGS TO BE FINISHED (RETURNS AT INTERMEDIATE LANDING NEED TO BE CONNECTED AT INTERIOR RAILING) OLD EXISTING GRAB RAIL BRACKETS NEED TO BE REMOVED

AT CT ENCLOSURE PLATFORM ON SOUTH SIDE OBSERVED TACK WELDING OF RAILING TO EXISTING STRUCTURE

ALL ABOVE WELDING FILLET WELDS PERFORMED BY MARCO SERRANO
PROCESS USED SMAW ELECTRODE E 7018

WORK IN PROGRESS

PAGE 1 OF 1

CERTIFICATION OF COMPLIANCE

I HEREBY CERTIFY THAT I HAVE INSPECTED TO THE BEST OF MY KNOWLEDGE ALL OF THE ABOVE REPORTED WORK UNLESS OTHERWISE NOTED. I HAVE FOUND THIS WORK TO COMPLY WITH THE APPROVED PLANS, SPECIFICATIONS, AND APPLICABLE SECTIONS OF THE GOVERNING BUILDING LAWS.

SIGNATURE OF REGISTERED INSPECTOR

CWI 95011101 — SPECIALTY NUMBER
AWS — AGENCY

TIME IN	TIME OUT	REG. HOURS	O.T. HOURS	SAMPLES
6:25	2:10	8 PV	—	—

All inspections based on a minimum of 4 hours and over 4 hours — 8 hour minimum.

Approved [signature] 7/8/08
Project Supervisor

DICK NIGRA INSPECTIONS, INC.

4735 Oakado Place
La Canada, CA 91011

Phone (818) 957-2759
Fax (818) 957-2885
Cell (818) 326-4291
(818) 541-6467

REGISTERED INSPECTOR'S DAILY REPORT

Date: 7-2-08 WED

TYPE OF INSPECTION REQUIRED			
	❑ Reinforced concrete	❑ Structural Steel Assembly	❑ Gunite
	❑ Post Tensioned Concrete	☒ Welding	❑ Epoxy
	❑ Reinforced Masonry	❑ Spray-Applied Fireproofing	❑ Other

Job Address: 320 N. LAKE ST	City: BURBANK
Job Name: MAGNOLIA POWER PLANT	Permit No / Issued By
Type of Structure: PLATFORMS, CATWALKS, STAIRWAYS, LADDERS	Architect: AKER KUAERNER
Material Description (type, grade, source)	Engineer: BLACK & VEATCH
	Contractor: RND CONTRACTORS
Inspector(s) Name: MARK S. MILLERON 626-833-3415	Subcontractor

TEST PERFORMED

TYPE OF SAMPLE	SLUMP	QUANTITY IN SET	ADDITIONAL REMARKS ON SAMPLES
			MARK S. MILLERON
			CWI 95011101
			QC1 EXP. 1/11

INSPECTION SUMMARY

AT CT ENCLOSURE PLATFORM ABOVE TURBINE OBSERVED WELDING OF RAILINGS TO EXISTING STRUCTURE ON NORTH, SOUTH, AND EAST SIDES.

WORK INCOMPLETE - SOUTH SIDE POST, SOUTH SIDE TOE KICK SOUTH SIDE LADDER & PLATFORM, CLEAN UP & GRIND

ABOVE FILLET WELDS PERFORMED BY
MARCO SERRANO PROCESS SMAW E7018
JOSE GARCIA PROCESS FCAW E71T-8 LINCOLN NR 232

WORK IN PROGRESS

CERTIFICATION OF COMPLIANCE

I HEREBY CERTIFY THAT I HAVE INSPECTED TO THE BEST OF MY KNOWLEDGE ALL OF THE ABOVE REPORTED WORK UNLESS OTHERWISE NOTED. I HAVE FOUND THIS WORK TO COMPLY WITH THE APPROVED PLANS, SPECIFICATIONS, AND APPLICABLE SECTIONS OF THE GOVERNING BUILDING LAWS.

SIGNATURE OF REGISTERED INSPECTOR

CWI 95011101 — SPECIALTY NUMBER
AWS — AGENCY

PAGE ____ OF ____

TIME IN	TIME OUT	REG. HOURS	O.T. HOURS	SAMPLES
6:45	2:00	8 PV		

All inspections based on a minimum of 4 hours and over 4 hours — 8 hour minimum.

Approved: Ron Maxwell 7/8/08
Project Supervisor

DICK NIGRA INSPECTIONS, INC.

4735 Oakado Place
La Canada, CA 91011

Phone (818) 957-2759
Fax (818) 957-2885
Cell (818) 326-4291
(818) 541-6467

REGISTERED INSPECTOR'S DAILY REPORT

Date 7-3-08 THUR

TYPE OF INSPECTION REQUIRED			
	☐ Reinforced concrete	☐ Structural Steel Assembly	☐ Gunite
	☐ Post Tensioned Concrete	☒ Welding	☐ Epoxy
	☐ Reinforced Masonry	☐ Spray-Applied Fireproofing	☐ Other

Job Address: 320 N. LAKE ST.		City: BURBANK	
Job Name: MAGNOLIA POWER PLANT		Permit No	Issued By
Type of Structure: PLATFORMS, CATWALKS, STAIRWAYS, LADDERS		Architect: AKER KVAERNER	
Material Description (type, grade, source)		Engineer: BLACK & VEATCH	
		Contractor: RND CONTRACTORS	
Inspector(s) Name: MARK S. MILLERON 626-833-3415		Subcontractor	

TEST PERFORMED

TYPE OF SAMPLE	SLUMP	QUANTITY IN SET	ADDITIONAL REMARKS ON SAMPLES

AWS
MARK S. MILLERON
CWI 95011101
QC1 EXP. 1/10

INSPECTION SUMMARY

AT BYPASS VALVE MAINTENANCE ACCESS PLATFORM
OBSERVED WELDING OF 4X4 ANGLE SUPPORTS AND TACK
WELDING OF TEMPORARY SUPPORTS
WORK INCOMPLETE

ABOVE FILLET WELDS PERFORMED BY
MARCO SERRANO
PROCESS USED SMAW
ELECTRODE USED E7018 H4R

WORK IN PROGRESS

CERTIFICATION OF COMPLIANCE

I HEREBY CERTIFY THAT I HAVE INSPECTED TO THE BEST OF MY KNOWLEDGE ALL OF THE ABOVE REPORTED WORK UNLESS OTHERWISE NOTED. I HAVE FOUND THIS WORK TO COMPLY WITH THE APPROVED PLANS, SPECIFICATIONS, AND APPLICABLE SECTIONS OF THE GOVERNING BUILDING LAWS.

SIGNATURE OF REGISTERED INSPECTOR

CWI 95011101 AWS
SPECIALTY NUMBER AGENCY

PAGE 1 OF 1

TIME IN	TIME OUT	REG. HOURS	O.T. HOURS	SAMPLES
6:40	2:00	8 P.V.		

All inspections based on a minimum of 4 hours and over 4 hours — 8 hour minimum

Approved Ron Maxwell 7/8/08
Project Supervisor

DICK NIGRA INSPECTIONS, INC.

4735 Oakado Place
La Canada, CA 91011

Phone (818) 957-2759
Fax (818) 957-2885
Cell (818) 326-4291
(818) 541-6467

REGISTERED INSPECTOR'S DAILY REPORT

Date 7-7-08 MON

TYPE OF INSPECTION REQUIRED			
	☐ Reinforced concrete	☒ Structural Steel Assembly	☐ Gunite
	☐ Post Tensioned Concrete	☒ Welding	☐ Epoxy
	☐ Reinforced Masonry	☐ Spray-Applied Fireproofing	☐ Other

Job Address: 320 N. LAKE ST.	City: BURBANK
Job Name: MAGNOLIA POWER PLANT	Permit No / Issued By
Type of Structure: PLATFORMS, CATWALKS, STAIRWAYS, LADDERS	Architect: AKER KUAERNER
Material Description (type, grade, source)	Engineer: BLACK & VEATCH
	Contractor: RND CONTRACTORS
Inspector(s) Name: MARK S. MILLERON 626-833-3415	Subcontractor

TEST PERFORMED

TYPE OF SAMPLE	SLUMP	QUANTITY IN SET	ADDITIONAL REMARKS ON SAMPLES

MARK S. MILLERON
CWI 95011101
QC1 EXP. 1/10

INSPECTION SUMMARY

AT GLAND STEAM CONDENSER FAN CONTROL ACCESS PLATFORM OBSERVED WELDING OF 4X4 ANGLE SUPPORTS AND LADDER CLIPS. NOTE: TOP OF LADDER HAND RAILS NEED TO BE CONNECTED TO RAILING TO PREVENT SNAGGING OF CLOTHING ETC.

AT CT GENERATOR ACCESS PLATFORMS ON END OF CT GENERATOR OBSERVED WELDING OF RAILINGS, STAIRWAY MOUNTING BRACKETS (AT SLAB) AND LADDER. WORK COMPLETED EXCEPT FOR TOP OF LADDER

FILLET WELDS BY MARCO SERRANO
PROCESS USED SMAW E7018
WORK IN PROGRESS

CERTIFICATION OF COMPLIANCE

I HEREBY CERTIFY THAT I HAVE INSPECTED TO THE BEST OF MY KNOWLEDGE ALL OF THE ABOVE REPORTED WORK UNLESS OTHERWISE NOTED. I HAVE FOUND THIS WORK TO COMPLY WITH THE APPROVED PLANS, SPECIFICATIONS, AND APPLICABLE SECTIONS OF THE GOVERNING BUILDING LAWS.

SIGNATURE OF REGISTERED INSPECTOR

CWI 95011101 — SPECIALTY NUMBER
AWS — AGENCY

PAGE ____ OF ____

TIME IN	TIME OUT	REG. HOURS	O.T. HOURS	SAMPLES
5:50	1:10	8 PV		

All inspections based on a minimum of 4 hours and over 4 hours — 8 hour minimum.

Approved: Ron Maxwell 7/8/08
Project Superintendent

DICK NIGRA INSPECTIONS, INC.

4735 Oakado Place
La Canada, CA 91011

Phone (818) 957-2759
Fax (818) 957-2885
Cell (818) 326-4291
(818) 541-6467

REGISTERED INSPECTOR'S DAILY REPORT

Date 7-8-08 TUE

TYPE OF INSPECTION REQUIRED			
	☐ Reinforced concrete	☐ Structural Steel Assembly	☐ Gunite
	☐ Post Tensioned Concrete	☒ Welding	☐ Epoxy
	☐ Reinforced Masonry	☐ Spray-Applied Fireproofing	☐ Other

Job Address: 320 N. LAKE ST.	City: BURBANK	
Job Name: MAGNOLIA POWER PLANT	Permit No	Issued By
Type of Structure: PLATFORMS, CATWALKS, STAIRWAYS, LADDERS	Architect: AKER KVAERNER	
Material Description (type, grade, source)	Engineer: BLACK & VEATCH	
	Contractor: RND CONTRACTORS	
Inspector(s) Name: MARK S. MILLERON 626-833-3415	Subcontractor	

TEST PERFORMED

TYPE OF SAMPLE	SLUMP	QUANTITY IN SET	ADDITIONAL REMARKS ON SAMPLES
			MARK S. MILLERON
			CWI 95011101
			QCI EXP. 1/10

INSPECTION SUMMARY

OBSERVED WELDING OF CT GENERATOR ACCESS PLATFORM (HIGH PLATFORM) SUPPORTS AND RAILINGS
NOTE: SUPPORTS NOT WELDED TO GENERATOR (W8 I BEAMS)
ABOVE FILLET WELDS PERFORMED BY ANTONIO CONTRERAS
PROCESS USED SMAW E7018
OBSERVED WELDING OF CT ENCLOSURE PLATFORM ACCESS LADDER FIELD MODIFIED TO MEET EXISTING CONDITIONS

ABOVE FILLET WELDS PERFORMED BY JOSE GARCIA PROCESS USED FCAW E71T-8 NR 232 AND SMAW E7018 WORK IN PROGRESS

CERTIFICATION OF COMPLIANCE

I HEREBY CERTIFY THAT I HAVE INSPECTED TO THE BEST OF MY KNOWLEDGE ALL OF THE ABOVE REPORTED WORK UNLESS OTHERWISE NOTED. I HAVE FOUND THIS WORK TO COMPLY WITH THE APPROVED PLANS, SPECIFICATIONS, AND APPLICABLE SECTIONS OF THE GOVERNING BUILDING LAWS.

SIGNATURE OF REGISTERED INSPECTOR

CWI 95011101 — SPECIALTY NUMBER
AWS — AGENCY

PAGE 1 OF 1

TIME IN	TIME OUT	REG. HOURS	O.T. HOURS	SAMPLES
6:45	12:35	8 P.V.		

All inspections based on a minimum of 4 hours and over 4 hours — 8 hour minimum

Approved Ron Maxwell
Project Supervisor

DICK NIGRA INSPECTIONS, INC.

4735 Oakado Place
La Canada, CA 91011

Phone (818) 957-2759
Fax (818) 957-2885
Cell (818) 326-4291
(818) 541-6467

REGISTERED INSPECTOR'S DAILY REPORT

Date 7-9-08 WED

TYPE OF INSPECTION REQUIRED			
	☐ Reinforced concrete	☐ Structural Steel Assembly	☐ Gunite
	☐ Post Tensioned Concrete	☒ Welding	☐ Epoxy
	☐ Reinforced Masonry	☐ Spray-Applied Fireproofing	☐ Other

Job Address: 320 N. LAKE ST	City: [redacted] BURBANK
Job Name: MAGNOLIA POWER PLANT	Permit No / Issued By
Type of Structure: PLATFORMS, CATWALKS, STAIRWAYS, LADDERS	Architect: AKER KUAERNER
Material Description (type, grade, source)	Engineer: BLACK & VEATCH
	Contractor: RNO CONTRACTORS
Inspector(s) Name: MARK S. MILLERON	Subcontractor

TEST PERFORMED

TYPE OF SAMPLE	SLUMP	QUANTITY IN SET	ADDITIONAL REMARKS ON SAMPLES
			MARK S. MILLERON
			CWI 95011101
			QC1 EXP. 1/10

INSPECTION SUMMARY

AT CT GENERATOR HIGH ACCESS PLATFORM
OBSERVED WELDING OF W8 I BEAM SUPPORTS
TO CT GENERATOR - 4 1/2" THICK PLATE AT SIDE OF UNIT
ON NORTH SIDE AND SOUTH SIDE
1/4" FILLET WELDS ALL AROUND - WELDING COMPLETED
PLATE PREHEATED TO 225° PER AWS D1.1 TABLE 3.1
WELDING PERFORMED BY ANTONIO CONTRERAS - SMAW E7018
OBSERVED WELDING OF ACCESS LADDER & RAILINGS AT CT
ENCLOSURE PLATFORM - WORK COMPLETED
ABOVE FILLET WELDS BY JOSE GARCIA
PROCESS USED FCAW ELECTRODE E71T-8 LINCOLN NR 232
OBSERVED TACK WELDING OF LADDERS ZLD AREA VESSELS WAC1, WAC2, MMF1
ANTONIO CONTRERAS WORK IN PROGRESS

CERTIFICATION OF COMPLIANCE

I HEREBY CERTIFY THAT I HAVE INSPECTED TO THE BEST OF MY KNOWLEDGE ALL OF THE ABOVE REPORTED WORK UNLESS OTHERWISE NOTED. I HAVE FOUND THIS WORK TO COMPLY WITH THE APPROVED PLANS, SPECIFICATIONS, AND APPLICABLE SECTIONS OF THE GOVERNING BUILDING LAWS.

SIGNATURE OF REGISTERED INSPECTOR

CWI 95011101 — SPECIALTY NUMBER
AWS — AGENCY

PAGE 1 OF 1

TIME IN	TIME OUT	REG. HOURS	O.T. HOURS	SAMPLES
6:25	2:00	8 PV		

All inspections based on a minimum of 4 hours and over 4 hours — 8 hour minimum.

Approved — Project Supervisor

DICK NIGRA INSPECTIONS, INC.

4735 Oakado Place
La Canada, CA 91011

Phone (818) 957-2759
Fax (818) 957-2885
Cell (818) 326-4291
(818) 541-6467

REGISTERED INSPECTOR'S DAILY REPORT

Date 7-10-08 THUR

TYPE OF INSPECTION REQUIRED			
	☐ Reinforced concrete	☐ Structural Steel Assembly	☐ Gunite
	☐ Post Tensioned Concrete	☒ Welding	☐ Epoxy
	☐ Reinforced Masonry	☐ Spray-Applied Fireproofing	☐ Other

Job Address: 320 N. LAKE ST	City: BURBANK
Job Name: MAGNOLIA POWER PLANT	Permit No / Issued By
Type of Structure: PLATFORMS, CATWALKS, STAIRWAYS, LADDERS	Architect: AKER KVAERNER
Material Description (type, grade, source)	Engineer: BLACK & VEATCH
	Contractor: RND CONTRACTORS
Inspector(s) Name: MARK S. MILLERON 626-833-3415	Subcontractor

TEST PERFORMED

TYPE OF SAMPLE	SLUMP	QUANTITY IN SET	ADDITIONAL REMARKS ON SAMPLES
			MARK S. MILLERON CWI 95011101 QC1 EXP. 1/10

INSPECTION SUMMARY

AT ZLD AREA ON VESSELS WAC1, WAC2, MMF1, MMF2 OBSERVED WELDING OF PLATFORM AND LADDER SUPPORTS, AND CLIPS ALL WELDS FILLET WELDS - INCOMPLETE WELDING PERFORMED BY ANTONIO CONTRERAS SMAW E7018

IN STG BUILDING ON BRIDGE CRANE OBSERVED WELDING ACCESS PLATFORM TO BRIDGE CRANE STRUCTURE, 3" CHANNEL (3) WELDED BOTH SIDES WITH 1/4 x 3" FILLET WELDS - WELDING OF LADDER SUPPORTS ALL FILLET WELDS. - INCOMPLETE WELDING PERFORMED BY JOSE GARCIA PROCESS USED SMAW ELECTRODE E7018

WORK IN PROGRESS

CERTIFICATION OF COMPLIANCE

I HEREBY CERTIFY THAT I HAVE INSPECTED TO THE BEST OF MY KNOWLEDGE ALL OF THE ABOVE REPORTED WORK UNLESS OTHERWISE NOTED. I HAVE FOUND THIS WORK TO COMPLY WITH THE APPROVED PLANS, SPECIFICATIONS, AND APPLICABLE SECTIONS OF THE GOVERNING BUILDING LAWS.

SIGNATURE OF REGISTERED INSPECTOR

CWI 95011101 AWS

SPECIALTY NUMBER AGENCY

PAGE ____ OF ____

TIME IN	TIME OUT	REG. HOURS	O.T. HOURS	SAMPLES
6:40	1:10	8 P.V.	—	—

All inspections based on a minimum of 4 hours and over 4 hours — 8 hour minimum.

Approved Ken A Maxwell
Project Supervisor

DICK NIGRA INSPECTIONS, INC.

4735 Oakado Place
La Canada, CA 91011

Phone (818) 957-2759
Fax (818) 957-2885
Cell (818) 326-4291
(818) 541-6467

REGISTERED INSPECTOR'S DAILY REPORT

Date 7-11-08 FRI

TYPE OF INSPECTION REQUIRED			
	☐ Reinforced concrete	☐ Structural Steel Assembly	☐ Gunite
	☐ Post Tensioned Concrete	☒ Welding	☐ Epoxy
	☐ Reinforced Masonry	☐ Spray-Applied Fireproofing	☐ Other

Job Address: 320 N. LAKE ST	City: BURBANK
Job Name: MAGNOLIA POWER PLANT	Permit No / Issued By
Type of Structure: PLATFORMS, CATWALKS, STAIRWAYS, LADDERS	Architect: AKER KVAERNER
Material Description (type, grade, source)	Engineer: BLACK & VEATCH
	Contractor: RND CONTRACTORS
Inspector(s) Name: MARK S. MILLERON 626-833-3415	Subcontractor

TEST PERFORMED

TYPE OF SAMPLE	SLUMP	QUANTITY IN SET	ADDITIONAL REMARKS ON SAMPLES

MARK S. MILLERON
CWI 95011101
QC1 EXP 1/1/10

INSPECTION SUMMARY

AT ZLO AREA ON VESSELS WAC1, WAC2, MMF1, MMF2
OBSERVED WELDING OF PLATFORM AND LADDER SUPPORTS, CCIPS
ALL FILLET WELDS BY ANTONIO CONTRERAS SMAW E7018 WORK COMPLETED
IN STG BUILDING ON BRIDGE CRANE ACCESS PLATFORM
OBSERVED WELDING OF LADDER SUPPORTS AND RAILINGS, WORK COMPLETED
FILLET WELDS BY JOSE GARCIA FCAW E71T-8 NR232
AT BYPASS VALVE MAINTENACE PLATFORM OBSERVED WELDING
& FIELD FIT UP OF SUPPORTS - INCOMPLETE
FILLET WELDS BY JOSE GARCIA SMAW E7018

WORK IN PROGRESS

CERTIFICATION OF COMPLIANCE

I HEREBY CERTIFY THAT I HAVE INSPECTED TO THE BEST OF MY KNOWLEDGE ALL OF THE ABOVE REPORTED WORK UNLESS OTHERWISE NOTED. I HAVE FOUND THIS WORK TO COMPLY WITH THE APPROVED PLANS, SPECIFICATIONS, AND APPLICABLE SECTIONS OF THE GOVERNING BUILDING LAWS.

SIGNATURE OF REGISTERED INSPECTOR

CWI 95011101 — SPECIALTY NUMBER
AMS — AGENCY

PAGE 1 OF 1

TIME IN	TIME OUT	REG. HOURS	O.T. HOURS	SAMPLES
6:40	2:05	8 P.V.		

All inspections based on a minimum of 4 hours and over 4 hours — 8 hour minimum.

Approved — Project Supervisor

DICK NIGRA INSPECTIONS, INC.

4735 Oakado Place
La Canada, CA 91011

Phone (818) 957-2759
Fax (818) 957-2885
Cell (818) 326-4291

REGISTERED INSPECTOR'S DAILY REPORT

Date 7-17-08 THUR

TYPE OF INSPECTION REQUIRED			
	❑ Reinforced concrete	❑ Structural Steel Assembly	❑ Gunite
	❑ Post Tensioned Concrete	☒ Welding	❑ Epoxy
	❑ Reinforced Masonry	❑ Spray-Applied Fireproofing	❑ Other

Job Address: 320 N. LAKE ST.	City: BURBANK
Job Name: MAGNOLIA POWER PLANT	Permit No / Issued By
Type of Structure: PLATFORMS, CATWALKS, STAIRWAYS, LADDERS	Architect: AKER KUAERNER
Material Description (type, grade, source)	Engineer: BLACK & VEATCH
	Contractor: RND CONTRACTORS
Inspector(s) Name: MARK S. MILLEROW	Subcontractor

TEST PERFORMED

TYPE OF SAMPLE	SLUMP	QUANTITY IN SET	ADDITIONAL REMARKS ON SAMPLES

INSPECTION SUMMARY

IN STG BUILDING OBSERVED WELDING OF ACCESS LADDER CLIPS & SUPPORTS TO EXISTING STRUCTURE AND 2 NEW PLATFORMS. ALL WELDS FILLET WELDS PERFORMED BY FRANCISCO MERCADO - PROCESS USED SMAW - E7018

WORK IN PROGRESS

AT BY-PASS MAINTENANCE PLATFORM OBSERVED WELDING BUTT JOINT C.J.P CONNECTIONS ON 8" CHANNEL & 4" CHANNEL SUPPORTS, WELDING OF 4" ANGLE SUPPORTS, LADDER CLIPS (FILLET WELDS)

WELDING PERFORMED BY JOSE GARCIA

PROCESS USED FCAW

ELECTRODE E71T-8 LINCOLN NR 232

WORK IN PROGRESS

CERTIFICATION OF COMPLIANCE

I HEREBY CERTIFY THAT I HAVE INSPECTED TO THE BEST OF MY KNOWLEDGE ALL OF THE ABOVE REPORTED WORK UNLESS OTHERWISE NOTED. I HAVE FOUND THIS WORK TO COMPLY WITH THE APPROVED PLANS, SPECIFICATIONS, AND APPLICABLE SECTIONS OF THE GOVERNING BUILDING LAWS.

SIGNATURE OF REGISTERED INSPECTOR

CWI 95011101 AWS

PAGE 1 OF 1

TIME IN	TIME OUT	REG. HOURS	O.T. HOURS	SAMPLES
6:40	2:[illegible]	8.PV		

All inspections based on a minimum of 4 hours and over 4 hours — 8 hour minimum

Approved Rod Maxwell
Design Engineer

DICK NIGRA INSPECTIONS, INC.

4735 Oakado Place
La Canada, CA 91011

Phone (818) 957-2759
Fax (818) 957-2885
Cell (818) 326-4291

REGISTERED INSPECTOR'S DAILY REPORT

Date 8-15-08 F21

TYPE OF INSPECTION REQUIRED			
	☐ Reinforced concrete	☐ Structural Steel Assembly	☐ Gunite
	☐ Post Tensioned Concrete	☒ Welding	☐ Epoxy
	☐ Reinforced Masonry	☐ Spray-Applied Fireproofing	☐ Other

Job Address: 320 N. LAKE ST		City: BURBANK	
Job Name: MAGNOLIA POWER PLANT		Permit No	Issued By
Type of Structure: PLATFORMS, CATWALKS, STAIRWAYS LADDERS		Architect: AKER KVAERNER	
Material Description (type, grade, source)		Engineer: BLACK & VEATCH	
		Contractor: RND CONTRACTORS	
Inspector(s) Name: MARK S. MILLERON 626-8338415		Subcontractor	

TEST PERFORMED

TYPE OF SAMPLE	SLUMP	QUANTITY IN SET	ADDITIONAL REMARKS ON SAMPLES

INSPECTION SUMMARY

PERFORMED WALK THRU OF WORK PERFORMED BY RND CONTRACTORS (LADDERS, STAIRWAYS, PLATFORMS AND CATWALKS) AT THE FOLLOWING LOCATIONS:

ZLD AREA, MMF 1, MMF 2, WAC 1, WAC 2

IN STG BUILDING - BRIDGE CRANE, CONDENSOR WATER BOX, GLAND STEAM CONDENSOR, B-1 PASS VALVE MAINT PLATFORM

CT GENERATOR, CT ENCLOSURE ABOVE TURBINE

ALL ABOVE WELDING ACCEPTABLE

MARK S. MILLERON
95011101
UCI EXP. 1/10

CERTIFICATION OF COMPLIANCE

I HEREBY CERTIFY THAT I HAVE INSPECTED TO THE BEST OF MY KNOWLEDGE ALL OF THE ABOVE REPORTED WORK UNLESS OTHERWISE NOTED. I HAVE FOUND THIS WORK TO COMPLY WITH THE APPROVED PLANS, SPECIFICATIONS, AND APPLICABLE SECTIONS OF THE GOVERNING BUILDING LAWS.

SIGNATURE OF REGISTERED INSPECTOR

CWI 95011101 AWS
SPECIALTY NUMBER AGENCY

PAGE 1 OF 1

TIME IN	TIME OUT	REG. HOURS	O.T. HOURS	SAMPLES
6:30	11:30	8 P.V.		

All inspections based on a minimum of 4 hours and over 4 hours — 8 hour minimum.

Approved

Project Supervisor

MAGNOLIA
POWER PROJECT
A SOUTHERN CALIFORNIA PUBLIC POWER AUTHORITY PROJECT

Burbank, California
January 31, 2008

City of Burbank – Building Division
Community Development Department
275 East Olive Ave – P.O. Box 6459
Burbank, California, 91510-6459
Attn: Thomas Sloan, Deputy Building Official
(818) 238-5220

Subject: Corrections to Submitted Plans for Fabrication and Erection of Additional Safety Platforms for Magnolia Power Project

Attached please find two complete sets of full-size, wet-stamped drawings for the subject project and responses to comments relating to the drawings and calculations by Black & Veatch for the subject project, as transmitted by the Building Division (based on review by Don Strand of Brandow & Johnston, Inc.). I believe this submittal fully addresses the corrections requested by the Building Division.

RND Contractors already sent to the Building Division (to your attention) a check in the amount of $5,645.67 made payable to the "City of Burbank - Building Division" to cover Permit Fees. Hopefully, with this submittal, documents are satisfactory to complete the Building Division design review process.

If there are no further comments, please proceed with issuance of the permit for this project. Contact me if further information or clarification is required. My email address is mpp@ci.burbank.ca.us, and my cell number is (818) 438-1608.

Sincerely,

Ron Maxwell

Ron S. Maxwell, P.E.

cc: Russ Sauter - RND Contractors, Inc.
(Attachments - two sets enclosed)

1. Memorandum dated 12/18/07 from Don Strand to Calvin Chang entitled Magnolia Power Plant
2. Response to Memorandum listed above – comments by Black & Veatch
3. Full size, wet-stamped drawings for the Project (including Drawings No. S1000, S1002, S1008, S1011, & S1012 – revised to incorporate corrections per comments from Building Division)
4. CTG Generator Foundation Drawings 110-C-001 thru 005
5. Concrete Pad Design Sketches provided by Black & Veatch (4 pages)
6. Stud to Trunion Weld Adequacy Verification Calculation dated 1/12/08 (3 pages)
7. Angle & Gusset Plate Support Adequacy Verification Calculation dated 1/12/08 (2 pages)
8. Comments on Sheet No. S-1011 dated 1/17/08 (3 pages)
9. Comments on Sheet No. S-1012 dated 1/17/08 (1 page)
10. Overall Site Plan for Platform Additions at MPP (1 page)

MEMORANDUM

LOS ANGELES
444 South Flower Street, Suite 400
Los Angeles, CA 90071
tel: 213/596-4500 fax: 213/596-4599

JOB# 0710421.103

DATE 12/18/07

SUBJECT Magnolia Power Plant PC #BS0712001
164 W. Magnolia Blvd.

#PAGES

TO Calvin Chang cchang@CI.Burbank.CA.US
Building Department, City of Burbank

FROM Don Strand

The following comments relate to the drawings and calculations by Black & Veatch:

Sheet No.	Comment
S1001	• For handrail post spacing and details, refer to S1012.
	• It would be helpful to have information on the existing concrete foundation (wall) and footings supporting the new posts.
S1002	• GTG-3 Plan – Who is to provide concrete pads (by others) and what size are these pads?
	• GTG-5 Section E – Provide connection detail of W8x31 beam to W8x31 column. Also verify adequacy of column to W8x31 stub welded to existing trunion plates.
	• GTG-3 Section A – Change 1/S1011 to A/S1011.
S1003	• GSC-1 Plan – Provide section of C6x and L3x brace since no detail given for connection to existing.
S1004	• ZLD Platform Section Looking South – Who provides pad (and size) "as required"?
S1006	• Weak Acid Platform Section A – Verify that bracing to the existing tank does not jeopardize the tank walls.
S1008	• Section 1 – Verify stability and capacity for vertical load of existing gusset plate to the L5x.
	• Detail A – Provide connections between beams and columns.
S1011	• Section 3 & 13 – Verify adequacy of kick plate to span 5'-0" and check C10x for bending of top flange and web for handrail load. The angle carrying the grating may need to be added also when parallel to the grating span to provide stability.

BRANDOW & JOHNSTON, INC

MEMORANDUM

LOS ANGELES
444 South Flower Street, Suite 400
Los Angeles, CA 90071
tel: 213/596-4500 fax: 213/596-4599

- Detail G – Refer to S1012.
- Detail H – Is all grating 1¼" ? – Verify for 7'-10½" span sheet S2001.
- Detail J – 3/4Φ expansion bolt requires $6d_b$ minimum spacing.

S1012

- Detail 17 – ¾"Φ bolt is maximum for C10x.
- Typical Stair Rail – Spec. calls for 6'-0" maximum spacing of posts. Also call out rail and post pipe size and verify.
- Typical Stair Landing Bracing refers to Drawing S6951.

S2001

- Bypass Valve Platform – Support framing of grating couldn't be found. At deep cut-out at P6, is there support of this grating piece?

Please note – Black & Veatch sent their original calcs for the Silencer Access Platform but there is no address to send back to them.

It would be helpful if there was an overall plan of this complex to show where all these platforms occur.

DRS:ag
G:\07\0710421.10\Doc\Memo\Calvin Chang (City of Burbank) 12-18-07.doc

CITY OF BURBANK
MAGNOLIA WATER AND POWER
Access Platforms

Response to Memorandum from Mr. Don Strand of Brandow & Johnston, Inc. to Mr. Calvin Chang at the Building Department, City of Burbank dated December 18, 2007.

The following comments are related to Mr. Strands' review of drawings and calculations prepared by Black & Veatch.

Drawing S1001

Comment: For handrail post spacing and details, refer to S1012.

Response: B&V has added a general note on drawing S1000 which reads "Typical details shall be as shown on Drawings S1011, S1012 & S1013". (see attached drawings)

Comment: It would be helpful to have information on the existing concrete foundation (wall) and footings supporting the new posts.

Response: Information on the existing concrete foundation and footings supporting the new posts are provided on CTG Generation Foundation Drawings 110-C-001 thru 005. These drawings have been provided to the steel fabricator.

Drawing S1002

Comment: GTG-3 Plan – Who is to provide concrete pads (by others) and what size are these pads?

Response: The concrete pads will be provided by BWP Craftsmen built per concrete pad design sketches as provided by Black & Veatch. (see attached sketches)

Comment: GTG-5 Section E – Provide connection detail of W8X31 beam to W8X31 column. Also verify adequacy of column to W8X31 stub welded to existing trunion plates.

Response: B&V has added a connection detail to the drawing. (see attached drawings) B&V has also provided a calculation to prove the adequacy of the weld to the trunion plates. (see attached calculations)

Comment: GTG-3 Section A – Change 1/S1011 to A/S1011.

Response: B&V has made this revision on the drawing. (see attached drawings)

Drawing S1003

Comment: GSC-1 Plan – Provide section of C6x and L3x brace since no detail given for connection to existing.

Response: The 3X3X1/4 angle brace connects to the C6 and 4X4X1/4 angle post and does not attach to any existing steel.

Drawing S1004

Comment: ZLD Platform Section looking South – Who provides pad (and size) "as required"?

Response: The concrete pads will be provided by BWP Craftsmen built per concrete pad design sketches as provided by Black & Veatch. (see attached sketches)

Drawing S1006

Comment: Weak Acid Platform Section A – Verify that bracing to the existing tank does not jeopardize tank walls.

Response: The attachments indicated were supplied with the tank. The platform designed and detailed is basically what the manufacturer would have supplied if the platform had been purchased with the tank. The Owner had an option to purchase this platform with the tank.

Drawing S1008

Comment: Section 1 – Verify stability and capacity for vertical load of existing gusset plate to the Lx5.

Response: B&V have performed a calculation to confirm this connection. (see attached calculations)

Comment: Detail A – Provide connections between beams and columns.

Response: B&V have added details Post Connection Details A, B, C, & D to this drawing, (see attached drawings)

Drawing S1011

Comment: Section 3 & 13 – Verify adequacy of kick plate to span 5' – 0" and check C10X for bending of top flange and web for handrail load. The angle carrying the grating may need to be added also when parallel to the grating span to provide stability.

Response: Sections 3 & 13 indicate that the channel forms the kick plate. B&V have performed calculations to respond to the comment on 5' – 0" span of kick plate as

indicated on Section 2 and to address the handrail attached to the top flange of the channel. (see attached calculations)

Comment: Detail G – refer to S1012.

Response: B&V have revised this detail to say "see plans for dimensions". (see attached drawings)

Comment: Detail H – Is all grating 1 ¼"? Verify for 7' 101/2" span sheet S2001.

Response: All grating is 1 ¼" as called out in the specification. The span of grating on this platform is 4' – 41/2" per steel framing detailed on S1007.

Comment: Detail J – ¾" expansion anchor requires 6 diameter minimum spacing.

Response: B&V have changed the spacing to 5". (see attached drawings)

<u>Drawing S1012</u>

Comment: Detail 17 – ¾" bolt is maximum for C10.

Response: Details are "standard" and set up to cover various useages. In the case of this project the channel is a C10 and in accordance with AISC ¾ bolts are to be used. In order to clarify B&V has removed the 7/8" bolt call-out. (see attached drawings)

Comment: Typical Stair Rail – Spec. calls for 6' – 0" maximum spacing of posts. Also call out rail and post pipe size and verify.

Response: The 6' spacing called out in the specification is for horizontal applications. The intent of the detail on S1012 is for stairways where B&V uses a maximum of 5'. The rail and post sizes are specified in Article 5A.3 in the specification. These details are "Standards" and are used across many projects, By only calling out the sizes in the specification (which is always tailored to the project) you do not have to always change the details.

Comment: Typical Stair Landing Bracing refers to Drawing S6951.

Response: One of the problems with using "standard details" is the tailoring to specific projects. On a large project the S6900 series drawings would be included. B&V has revised this drawing to provide these details on S1012. (see attached drawings)

<u>Drawing S2001</u>

Comment: Bypass Valve Platform – Support framing of grating couldn't be found. At deep cut-out at P6, is there support of this grating.

Response: The support framing for this platform is shown on S1007.

General comments:

Comment: Please note- Black & Veatch sent their original calcs. for the Silencer Access Platform but there is no address to send back to them.

Response: Return of any and all documents provided for review shall be returned to Ron S. Maxwell, c/o Burbank Water & Power, 164 W. Magnolia Blvd., Burbank, CA 91503.

Comment: It would be helpful if there was an overall plan of this complex to show where all of these platforms occur.

Response: An overall site plan has been prepared – annotated to show where each of the various platforms are to be installed. (see attached drawings)

GENERAL NOTES APPLICABLE TO ALL S1000 & S2000 SERIES DRAWINGS

1. ALL DIMENSIONS ARE UNITED STATES SYSTEM UNLESS NOTED OTHERWISE.
2. ALL STRUCTURAL STEEL SHAPES SHALL BE ASTM A36.
3. ALL COLUMN BASEPLATES, SHEAR KEYS AND UPLIFT CHAIRS SHALL BE A36 UNLESS NOTED OTHERWISE.
4. ALL BEAM CONNECTIONS SHALL HAVE CONNECTION ANGLES SHOP WELDED TO THE BEAM WEB AND FIELD BOLTED WITH A 5 1/2" GAGE TO THE SUPPORTING MEMBER, UNLESS OTHERWISE NOTED. BOLTS SHALL BE ASTM A325 UNLESS OTHERWISE NOTED.
5. ALL FIELD CONNECTIONS TO EXISTING STRUCTURES SHALL BE BY BOLTING UNLESS OTHERWISE NOTED ON DRAWINGS.
6. ERECTING CONTRACTOR SHALL FIELD DRILL ALL EXISTING STEEL MEMBERS FOR FIELD BOLTED CONNECTIONS.
7. KICKPLATE SHALL BE STRAIGHT AND TRUE AT TIME OF WELDING TO GUARDRAIL POST.
8. SEE SPECIFICATION 61.4001 FOR GUARDRAIL, HANDRAIL, AND BAR GRATING TYPE AND SIZE.
9. PLATFORM FRAMING SHALL BE SHOP ASSEMBLED TO THE MAXIMUM EXTENT ALLOWABLE. CONTRACTOR SHALL BE RESPONSIBLE FOR DETERMINING AMOUNT OF FIELD ASSEMBLY.
10. FIELD WELDING OF STRUCTURAL ATTACHMENTS TO BEAMS OR OTHER MEMBERS SHALL BE PERFORMED WITH THE MEMBER POSITIONED TO ELIMINATE BENDING STRESSES IN THE AREA BEING WELDED. FIELD ATTACHMENTS OF HANGER LUGS SHALL BE MADE WITH WELDS PLACED PARALLEL TO AND CENTERED UNDER BEAM WEBS.
11. WELDS SHALL BE WITH AWS E70 ELECTRODES. ALL FIELD AND SHOP WELDING PROCEDURES SHALL BE IN ACCORDANCE WITH AWS CODES. ATTENTION SHALL BE GIVEN TO PROPER HEAT TREATMENT.
12. DEVIATIONS SHALL BE SUBJECT TO ACCEPTANCE BY THE ENGINEER.
13. DIMENSIONS SHOWN ON PLAN AND SLOPING FRAMING ARE PLAN DIMENSIONS.
14. BOLT HOLES SHALL BE 1/16" LARGER THAN THE NOMINAL BOLT DIAMETER, UNLESS OTHERWISE NOTED.
15. EXPANSION ANCHORS SHALL BE INSTALLED ACCORDING TO MANUFACTURER'S INSTRUCTIONS USING STANDARD EMBEDMENT DEPTHS, UNLESS OTHERWISE NOTED.
16. WHEN FILLET WELD SIZE IS NOT INDICATED ON THE DETAIL DRAWINGS, WELD SIZE SHALL BE ACCORDING TO TABLE J2.4 "AISC MANUAL OF STEEL TABLE CONSTRUCTION–ALLOWABLE STRESS DESIGN", 9TH EDITION.
17. STANDARD ANGLE GAGE SHALL BE THE "USUAL GAGES FOR ANGLES" SHOWN ON PAGE 1–52 "AISC MANUAL OF STEEL CONSTRUCTION–ALLOWABLE STRESS DESIGN", 9TH EDITION.
18. TYPICAL DETAILS SHALL BE AS SHOWN ON DRAWINGS S1011, S1012 & S1013.

ABBREVIATIONS

AB	ANCHOR BOLT	LG	LENGTH
ASSY	ASSEMBLY	LLO	LONG LEG OUTSTANDING
BOT	BOTTOM	LSH	LONG–SLOTTED HOLE
BM	BEAM	MIN	MINIMUM
BOPL	BOTTOM OF BASEPLATE ELEVATION	NOM	NOMINAL
BOS EL	BOTTOM OF STEEL ELEVATION	PL	PLATE
CL	CENTER LINE	REF	REFERENCE
CTR	CENTER	REINF	REINFORCEMENT
COL	COLUMN	REQD	REQUIRED
CONC	CONCRETE	REM	REMOVABLE STEEL
CONN	CONNECTION	SECT	SECTION
CONT	CONTINUOUS	SLO	SHORT LEG OUTSTANDING
CONTR	CONTRACTOR	SSH	SHORT–SLOTTED HOLE
DIA	DIAMETER	STD	STANDARD
DIM	DIMENSION	THK	THICKNESS
DET	DETAIL	T&B	TOP & BOTTOM
DWG	DRAWING	TOC EL	TOP OF CONCRETE ELEVATION
EB	ERECTION BRACE	TOG EL	TOP OF GRATING ELEVATION
EL	ELEVATION	TOS EL	TOP OF STEEL ELEVATION
EXP	EXPANSION	TOPL	TOP OF PLATE ELEVATION
FLG	FLANGE	TYP	TYPICAL
FDN	FOUNDATION	UON	UNLESS OTHERWISE NOTED
GA	GAGE	VERT	VERTICAL
HORIZ	HORIZONTAL	WD	WIDTH
JNT	JOINT	WP	WORK POINT

LEGEND

1 / S6950 — SECTION OR DETAIL NUMBER / DRAWING NUMBER ON WHICH SECTION OR DETAIL APPEARS

W12X40 / (± 1'–0") — MEMBER SHAPE / TOP OF STEEL IF DIFFERENT FROM REFERENCE ELEVATION. (+) SIGN INDICATES DISTANCE ABOVE; (–) SIGN INDICATES DISTANCE BELOW REFERENCE ELEVATION.

W10x33 POST (OR HANGER)
FROM (REF LEVEL)
TO (REF LEVEL) — POST OR HANGER DESIGNATION

☒ VERTICAL BRACE UP FROM INDICATED LOCATION

■ VERTICAL BRACE DOWN FROM INDICATED LOCATION

◪ VERTICAL BRACE UP AND DOWN FROM INDICATED LOCATION

☒ ○ SLEEVE OR OPENING IN CONCRETE OR GRATING

MATERIAL LEGEND

CONCRETE

GRATING

CHECKERED PLATE OR FLOOR COMPOSITE

EXISTING CONCRETE OR PRECAST

APPROVED FOR CONSTRUCTION

NO	DATE	REVISIONS AND RECORD OF ISSUE	DRN	DES	CHK	PDE	APP
1	01/17/2008	GENERAL REVISIONS	MAN	LEK		FAW	
0	02/09/2007	ISSUE FOR CONSTRUCTION	MAN	LEK		FAW	

I HEREBY CERTIFY THAT THIS DOCUMENT WAS PREPARED BY ME OR UNDER MY DIRECT SUPERVISION AND THAT I AM A DULY REGISTERED PROFESSIONAL ENGINEER UNDER THE LAWS OF THE STATE OF CALIFORNIA
SIGNED GRAYLYN L. GARR
DATE 01/17/2008 REG NO. 54956

BLACK & VEATCH CORPORATION

ENGINEER	L. KASHKA	DRAWN	M. NUTT
CHECKED	A. WILEY	DATE	09/27/06

BURBANK POWER & WATER
MAGNOLIA POWER PLANT

MAINTENANCE ACCESS PLATFORMS
ERECTION NOTES AND LEGEND

PROJECT / DRAWING NUMBER: 145348–S1000
REV: 1
CODE
AREA

NUT49453 ACAD 15.05
A1ASL015 D1 1=1
12/08/06 11:22:01

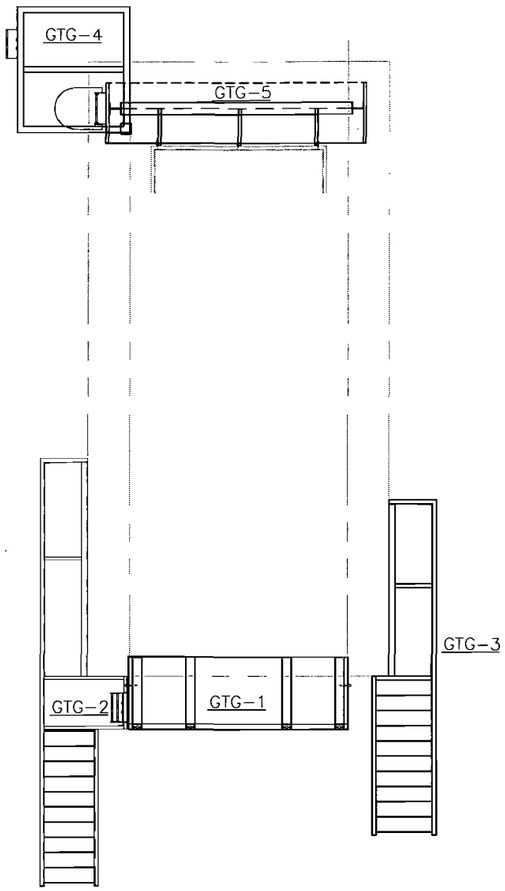

C.T. GENERATOR ACCESS PLATFORMS

SCALE: 1/4"=1'-0"

NOTE: PLAN PROVIDED TO SHOW RELATIONSHIP OF 5 GTG PLATFORMS ONLY. SEE INDIVIDUAL PLANS FOR DETAILS.

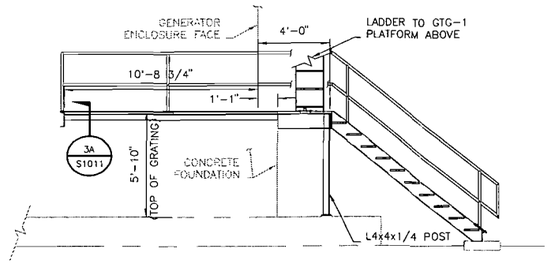

GTG-2: SECTION A-A

SCALE: 1/4"=1'-0"

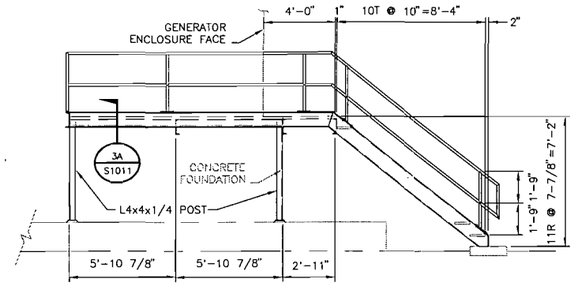

GTG-2: ELEVATION VIEW LOOKING SOUTH

SCALE: 1/4"=1'-0"

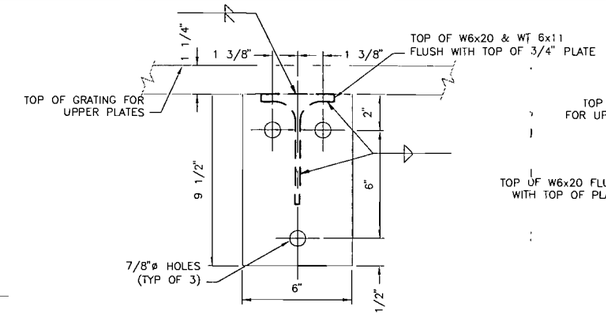

GTG-1: SECTION VIEW E (TYP OF 6)

SCALE: 3"=1'-0"

9 1/2"x6"x1" PLATE (EXIST)

9 1/2"x6"x3/4" PLATE (NEW)

NOTE: EXISTING 1" PLATES ARE TAPPED FOR RECEIVING 0.75-10 UNG-2B

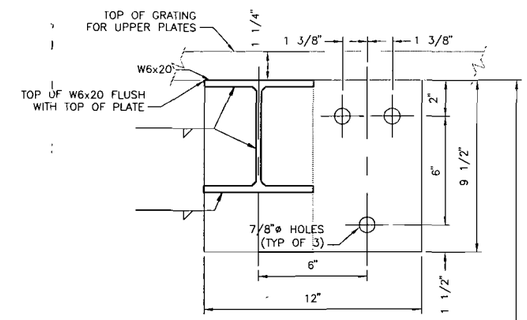

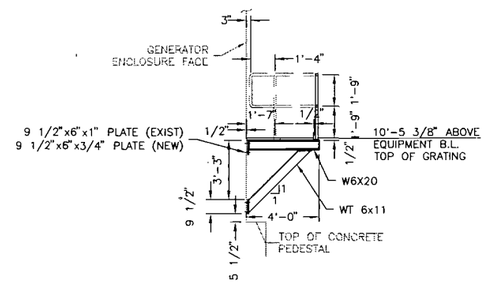

GTG-1: SECTION C-C (TYP 3 PLACES)

SCALE: 1/4"=1'-0"

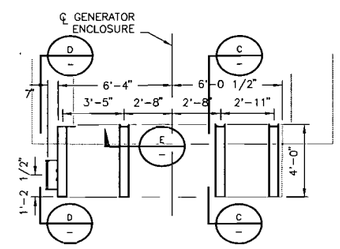

GTG-1: PLAN VIEW

SCALE: 1/4"=1'-0"

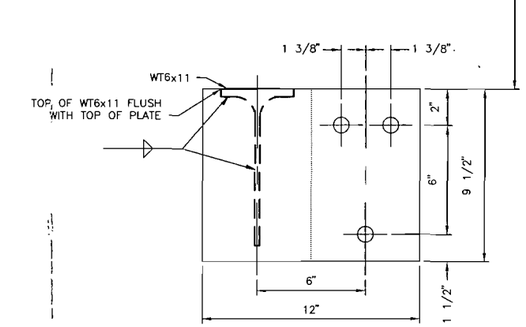

GTG-1: SECTION VIEW F-F (TYP OF 1)

SCALE: 3"=1'-0"

9 1/2"x6"x1" PLATE (EXIST)

9 1/2"x12"x3/4" PLATE (NEW)

NOTE: EXISTING 1" PLATES ARE TAPPED FOR RECEIVING 0.75-10 UNG-2B

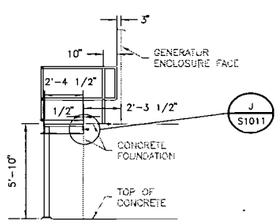

GTG-2: SECTION VIEW B-B

SCALE: 1/4"=1'-0"

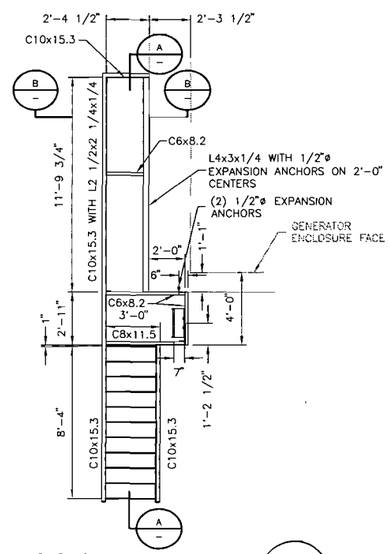

GTG-2: 1A-PLAN VIEW

SCALE: 1/4"=1'-0"

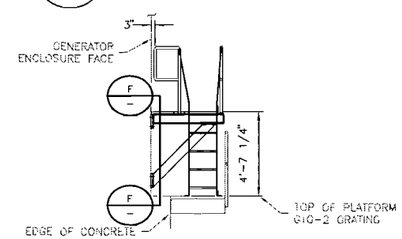

GTG-1: SECTION D-D

SCALE: 1/4"=1'-0"

APPROVED FOR CONSTRUCTION

NO	DATE	REVISIONS AND RECORD OF ISSUE	DRN	DES	CHK	PDE	APP
0	02/09/2007	ISSUE FOR CONSTRUCTION	MAN	LEK		FAW	

I HEREBY CERTIFY THAT THIS DOCUMENT WAS PREPARED BY ME OR UNDER MY DIRECT SUPERVISION AND THAT I AM A DULY REGISTERED PROFESSIONAL ENGINEER UNDER THE LAWS OF THE STATE OF CALIFORNIA

SIGNED GRAYLYN L. GARR

DATE 02/09/2007 REG NO. 54956

BLACK & VEATCH CORPORATION

ENGINEER L. KASHKA DRAWN M. NUTT

CHECKED A. WILEY DATE 09/27/06

BURBANK POWER & WATER
MAGNOLIA POWER PLANT

CT GENERATOR ACCESS PLATFORMS PLANS AND SECTIONS

PROJECT DRAWING NUMBER 145348-S1001

REV 0

CODE

AREA

NUT49453 ACAD 15.05
A1/S1015 D1 1=1
02/09/06 13:42:06

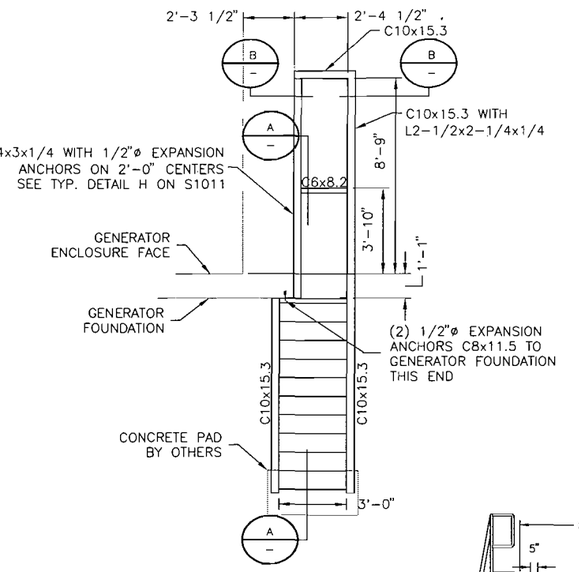

GTG-3: PLAN VIEW

SCALE: 1/4"=1'-0"

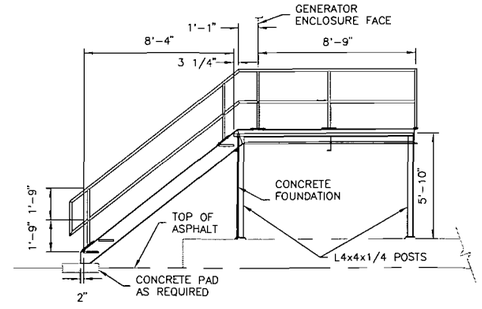

GTG-3: ELEVATION VIEW LOOKING NORTH

SCALE: 1/4"=1'-0"

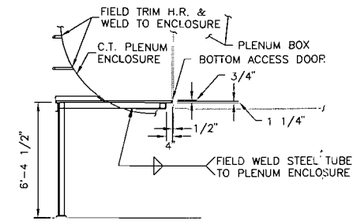

GTG-4: SECTION F-F

SCALE: 3/4"=1'-0"

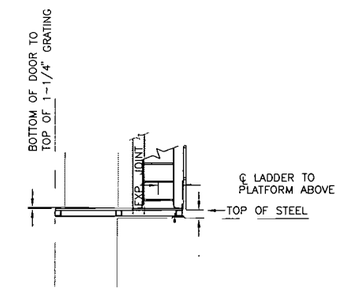

GTG-4: SECTION VIEW G-G

SCALE: 3/4"=1'-0"

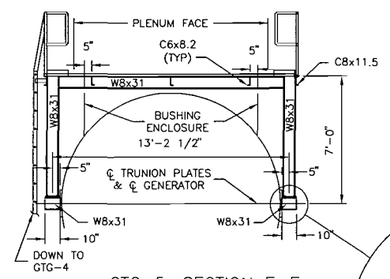

GTG-5: SECTION E-E

SCALE: 1/4"=1'-0"

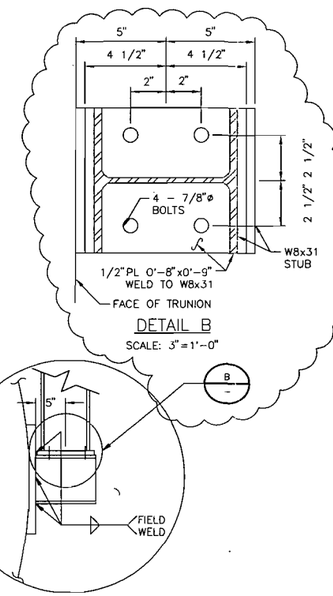

DETAIL B

SCALE: 3"=1'-0"

SCALE: 1"=1'-0"

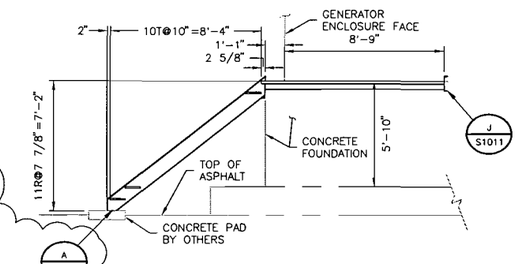

GTG-3: SECTION A-A

SCALE: 1/4"=1'-0"

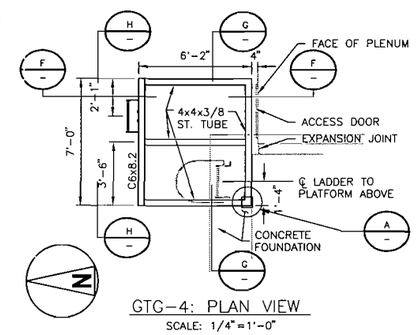

GTG-4: PLAN VIEW

SCALE: 1/4"=1'-0"

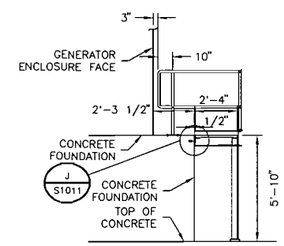

GTG-3: SECTION VIEW B-B

SCALE: 1/4"=1'-0"

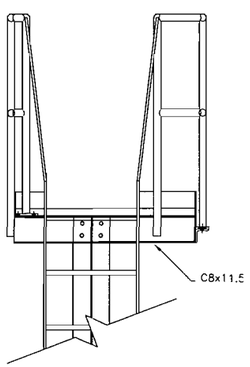

GTG-5: SECTION C-C

SCALE: 3/4"=1'-0"

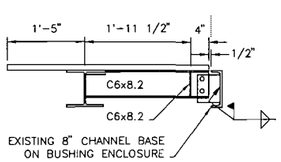

GTG-5: SECTION VIEW D-D

SCALE: 3/4"=1'-0"
TYP. 3 PLACES

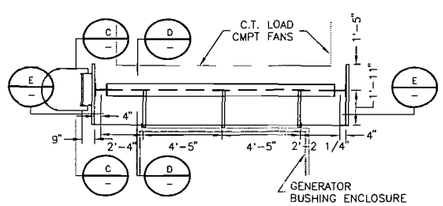

GTG-5: PLAN VIEW

SCALE: 1/4"=1'-0"

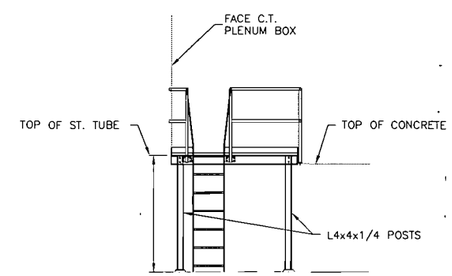

GTG-4: SECTION H-H

SCALE: 1/4"=1'-0"

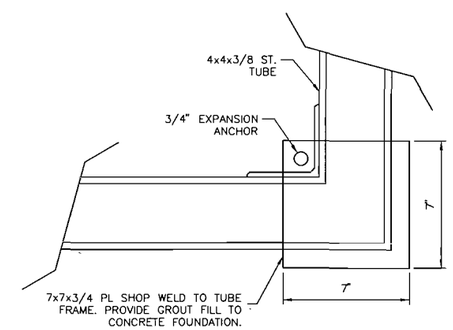

DETAIL A

SCALE: 3"=1'-0"

APPROVED FOR
CONSTRUCTION

NO	DATE	REVISIONS AND RECORD OF ISSUE	DRN	DES	CHK	PDE	APP
1	01/17/2008	GENERAL REVISIONS	MAN	LEK		FAW	
0	02/09/2007	ISSUE FOR CONSTRUCTION	MAN	LEK		FAW	

I HEREBY CERTIFY THAT THIS DOCUMENT WAS PREPARED BY ME OR UNDER MY DIRECT SUPERVISION AND THAT I AM A DULY REGISTERED PROFESSIONAL ENGINEER UNDER THE LAWS OF THE STATE OF CALIFORNIA
SIGNED GRAYLYN L. GARR
DATE 01/17/2008 REG NO. 54956

BLACK & VEATCH CORPORATION
© ADOBE53

ENGINEER L. KASHKA DRAWN M. NUTT
CHECKED A. WILEY DATE 10/09/06

BURBANK POWER & WATER
MAGNOLIA POWER PLANT

CT GENERATOR ACCESS PLATFORMS
PLANS AND SECTIONS

PROJECT DRAWING NUMBER 145348-S1002
REV 1
CODE
AREA

NUT74953 D1 ACAD 15.05
A1/S1015 1=1
12/12/06 10:23:23

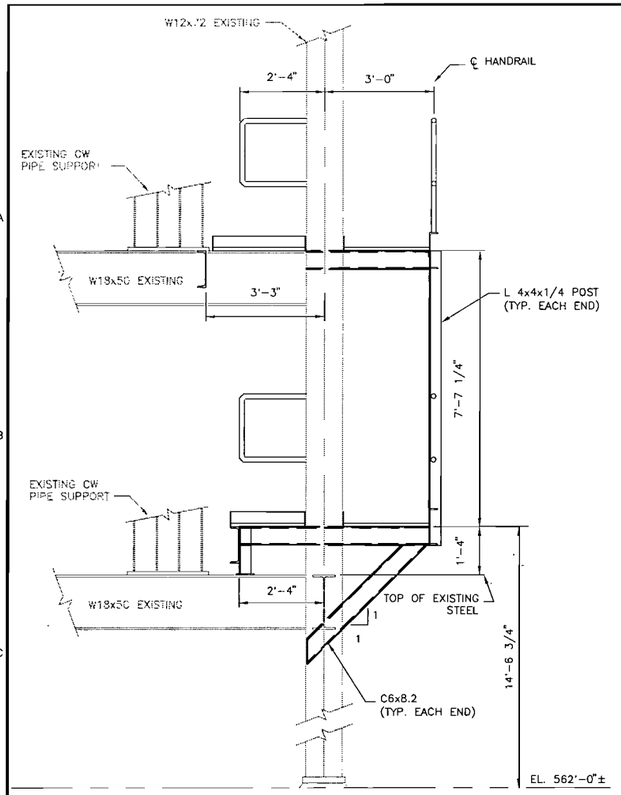

CONDENSER WATERBOX MANHOLE ACCESS-ELEVATION

SCALE: 1/2"=1'-0"

NOTE: ALL CONNECTIOS SHALL BE BOLTED

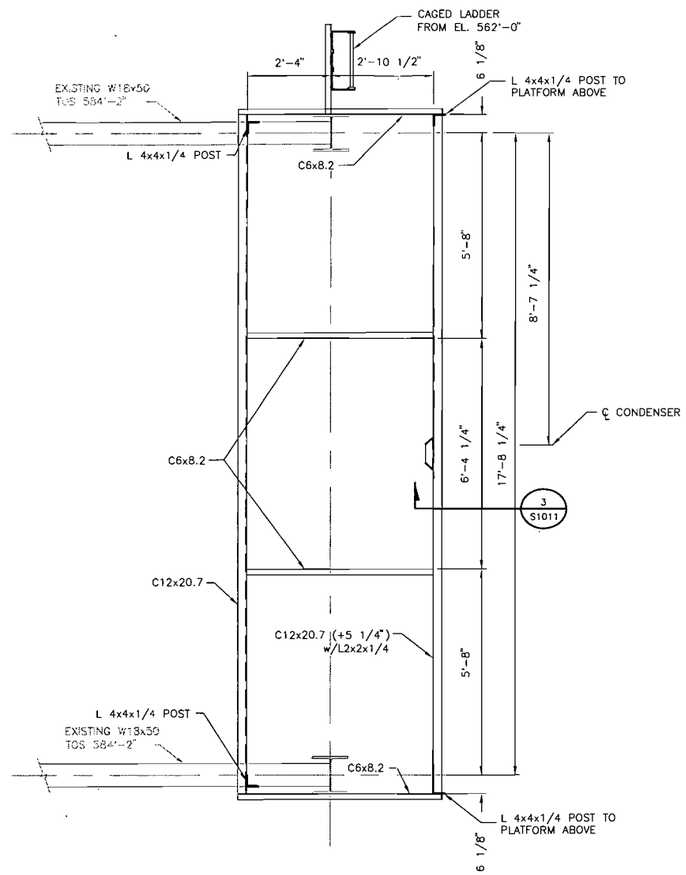

CONDENSER WATERBOX MANHOLE ACCESS PLAN @ 576'-6 3/4" T.O.S.

SCALE: 1/2"=1'-0"

NOTE: ALL CONNECTIOS SHALL BE BOLTED

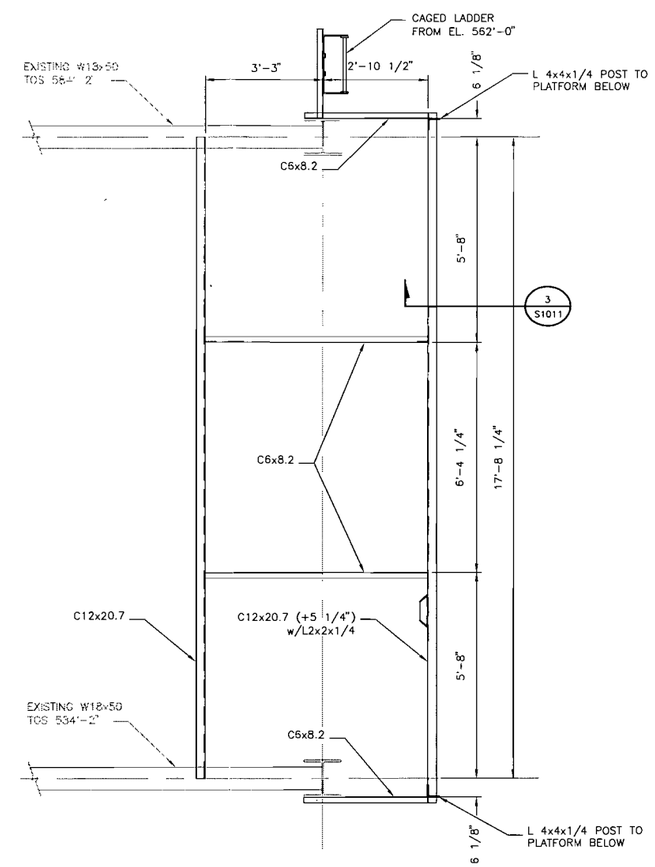

CONDENSER WATERBOX MANHOLE ACCESS PLAN @ 584'-2" T.O.S.

SCALE: 1/2"=1'-0"

NOTE: ALL CONNECTIOS SHALL BE BOLTED

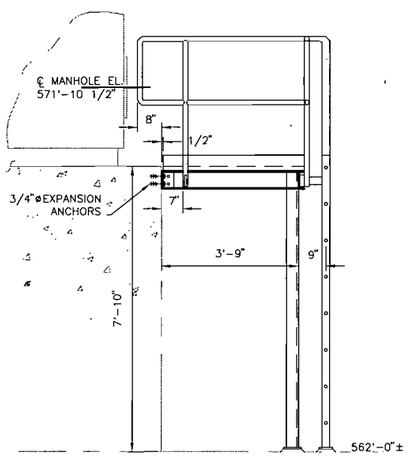

CONDENSER ACCESS PLATFORM ELEVATION LOOKING EAST

SCALE: 1/2"=1'-0"

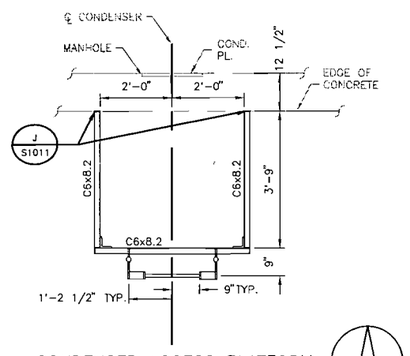

CONDENSER ACCESS PLATFORM FRAMING PLAN @ 568'-6 1/4"

SCALE: 1/2"=1'-0"

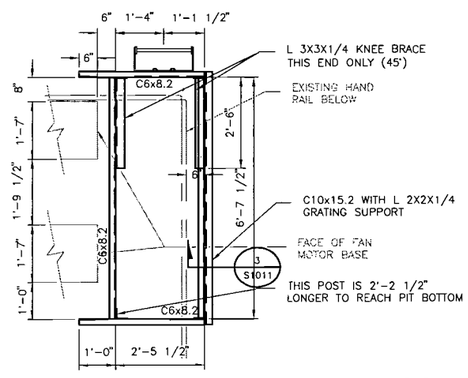

GLAND STEAM COND. VALVE ACCESS PLATFORM (GSC-1) PLAN

SCALE: 1/2"=1'-0"

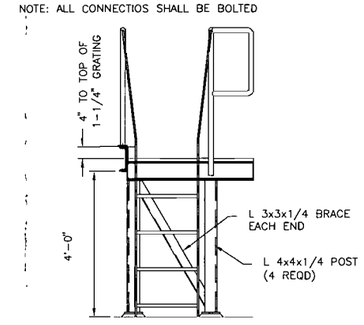

GSC-1: NORTH ELEVATION VIEW

SCALE: 1/2"=1'-0"

APPROVED FOR CONSTRUCTION

NO	DATE	REVISIONS AND RECORD OF ISSUE	DRN	DES	CHK	PDE	APP
D	02/09/2007	ISSUE FOR CONSTRUCTION	MANLEK			FAW	

I HEREBY CERTIFY THAT THIS DOCUMENT WAS PREPARED BY ME OR UNDER MY DIRECT SUPERVISION AND THAT I AM A DULY REGISTERED PROFESSIONAL ENGINEER UNDER THE LAWS OF THE STATE OF CALIFORNIA

SIGNED GRAYLYN L. GARR

DATE 02/09/2007 REG NO. 54956

BLACK & VEATCH CORPORATION

© ADDRESS

ENGINEER L. KASHKA DRAWN M. NUTT

CHECKED A. WILEY DATE 10/16/06

BURBANK POWER & WATER
MAGNOLIA POWER PLANT

STEAM CONDENSER ACCESS PLATFORMS PLANS AND SECTIONS

PROJECT DRAWING NUMBER 145348-S1003

REV 0

CODE

AREA

NUT49453 ACAD 16.1s (LMS Tech)
A1S1015 D1 1=1
02/07/07 09:10:03

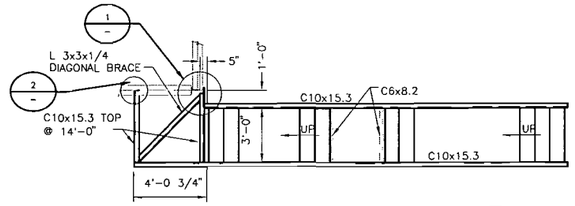

ZLD PLATFORM ACCESS PLAN

SCALE: 1/4"=1'-0"

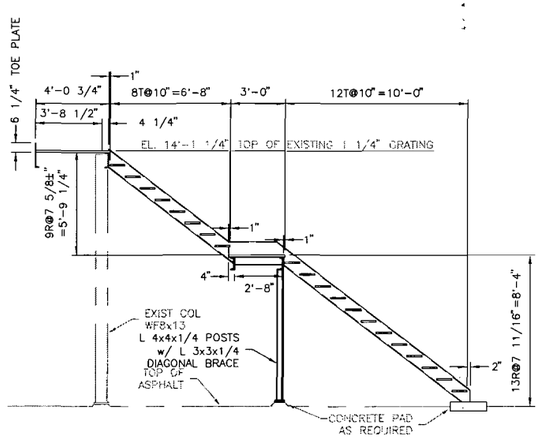

ZLD PLATFORM ACCESS
SECTION LOOKING SOUTH

SCALE: 1/4"=1'-0"

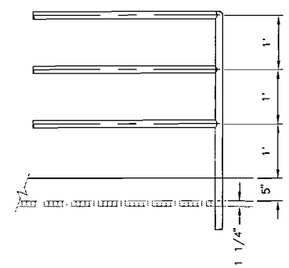

TYPICAL HANDRAIL @ ZLD AREA

SCALE: 3/4"=1'-0"

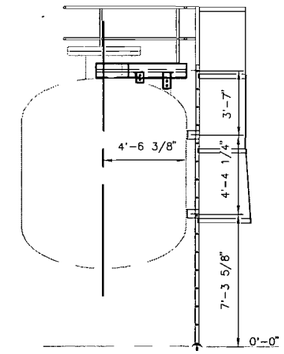

MULTI MEDIA FILTER TANK ELEVATION

SCALE: 1/4"=1'-0"

NOTE:
(1) 2 ASSEMBLIES REQUIRED

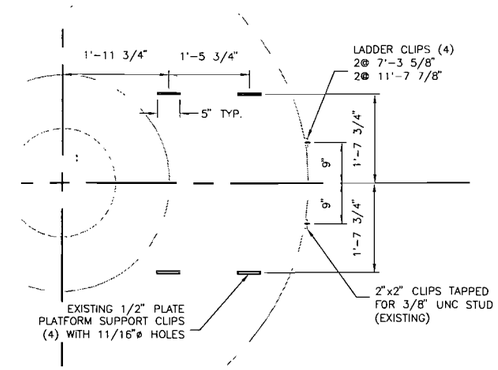

MULTI MEDIA FILTER TANK ACCESS
LADDER AND PLATFORM MOUNTING CLIP PLAN

SCALE: 3/4"=1'-0"

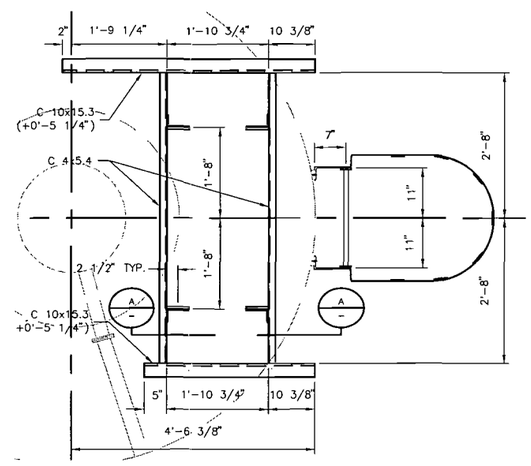

MULTI MEDIA FILTER TANK STEEL FRAMING PLAN

SCALE: 3/4"=1'-0"

NOTE:
(1) 2 ASSEMBLIES REQUIRED

(2) STEEL FRAME, INCLUDING
HANDRAIL, TO BE SHOP ASSEMBLED

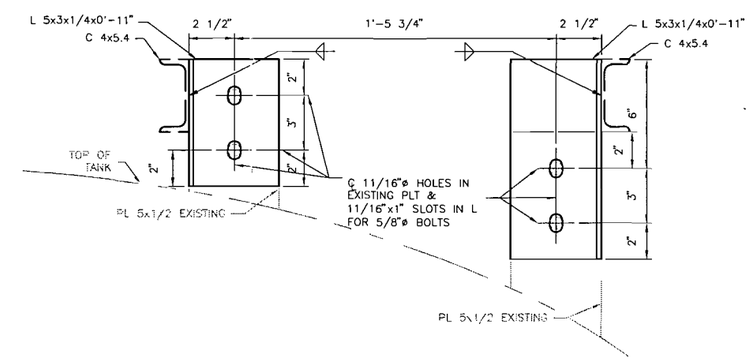

MULTI MEDIA FILTER TANK
SECTION A–A

SCALE: 3/4"=1'-0"

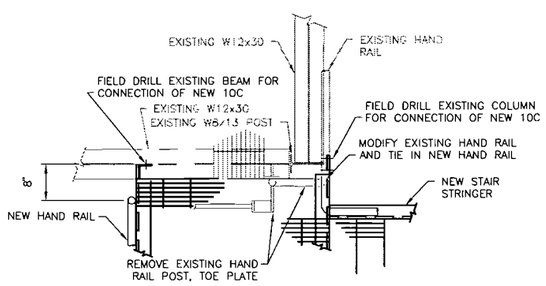

ZLD PLATFORM ACCESS
DETAIL 1

SCALE: 3/4"=1'-0"

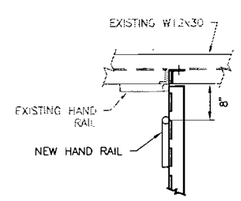

ZLD PLATFORM ACCESS
DETAIL 2

SCALE: 3/4"=1'-0"

APPROVED FOR
CONSTRUCTION

NO	DATE	REVISIONS AND RECORD OF ISSUE	DRN	DES	CHK	PDE	APP
D	02/09/2007	ISSUE FOR CONSTRUCTION	MAN	LEK		FAW	

I HEREBY CERTIFY THAT THIS DOCUMENT WAS PREPARED BY ME OR UNDER MY DIRECT SUPERVISION AND THAT I AM A DULY REGISTERED PROFESSIONAL ENGINEER UNDER THE LAWS OF THE STATE OF CALIFORNIA
SIGNED GRAYLYN L. GARR
DATE 02/09/2007 REG NO. 54956

BLACK & VEATCH CORPORATION
© ADDRESS

ENGINEER L. KASHKA DRAWN M. NUTT
CHECKED A. WILEY DATE 10/19/06

BURBANK POWER & WATER
MAGNOLIA POWER PLANT

ZLD & MULTI MEDIA FILTER TANK ACCESS PLATFORMS
PLANS AND SECTIONS

PROJECT DRAWING NUMBER 145348–S1004
REV 0
CODE
AREA

NUT49453 D1 ACAD 15.05
A1/S0105 1:1
12/08/06 11:28:22

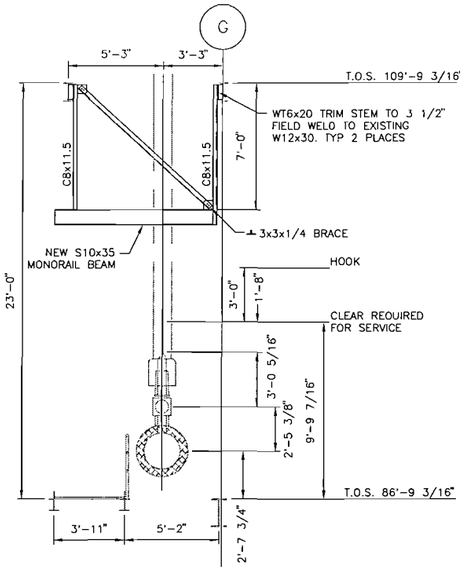

PSV213 MAINTENANCE PLATFORM ACCESS
SECTION LOOKING SOUTH
SCALE: 1/4"=1'-0"

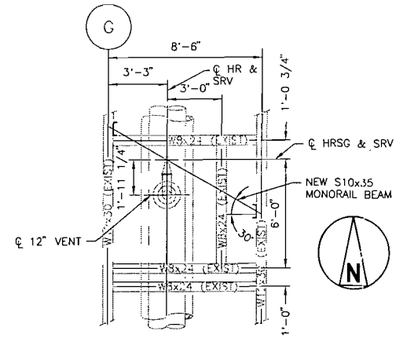

PSV213 MAINTENANCE PLATFORM ACCESS
PLAN @ EL. 109'-9 3/16" T.O.S.
SCALE: 1/4"=1'-0"

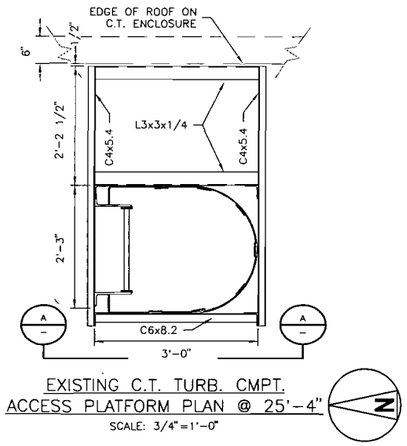

EXISTING C.T. TURB. CMPT.
ACCESS PLATFORM PLAN @ 25'-4"
SCALE: 3/4"=1'-0"

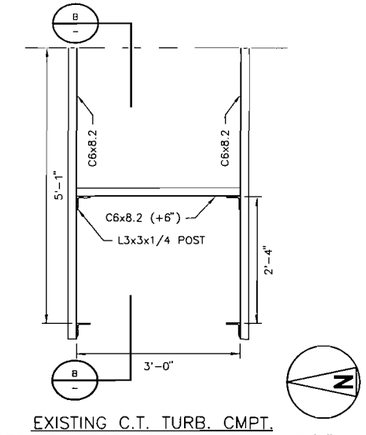

EXISTING C.T. TURB. CMPT.
ACCESS PLATFORM PLAN @ 24'-4 3/4"
SCALE: 3/4"=1'-0"

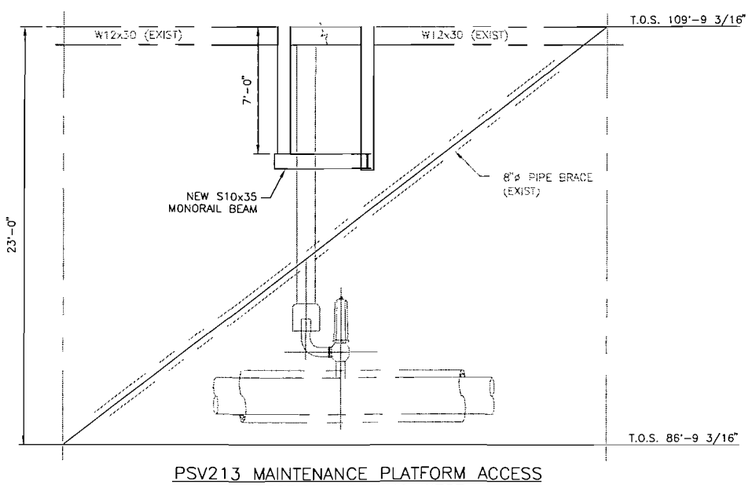

PSV213 MAINTENANCE PLATFORM ACCESS
SECTION LOOKING WEST
SCALE: 1/4"=1'-0"

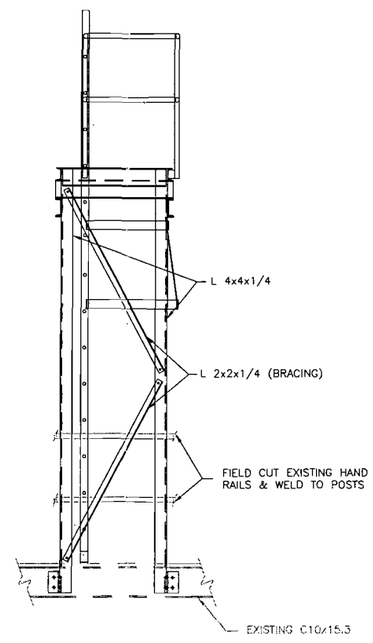

ACCESS TO EXISTING TOP C.T.
CMPT. SECTION A-A
SCALE: 1/2"=1'-0"

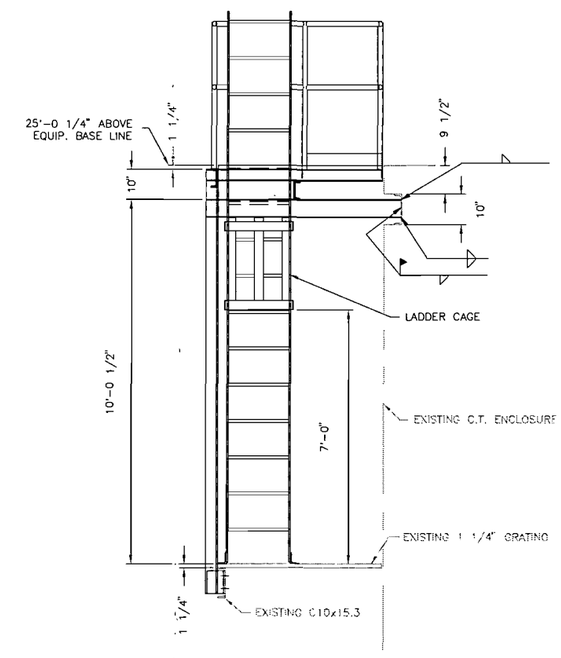

ACCESS TO EXISTING TOP C.T.
CMPT. SECTION B-B
SCALE: 1/2"=1'-0"

APPROVED FOR CONSTRUCTION

NO	DATE	REVISIONS AND RECORD OF ISSUE	DRN	DES	CHK	PDE	APP
0	02/09/2007	ISSUE FOR CONSTRUCTION	MAN	LEK		FAW	

I HEREBY CERTIFY THAT THIS DOCUMENT WAS PREPARED BY ME OR UNDER MY DIRECT SUPERVISION AND THAT I AM A DULY REGISTERED PROFESSIONAL ENGINEER UNDER THE LAWS OF THE STATE OF CALIFORNIA
SIGNED GRAYLYN L. GARR
DATE 02/09/2007 REG NO. 54956

BLACK & VEATCH CORPORATION
ADDRESS

ENGINEER	L. KASHKA	DRAWN	M. NUTT
CHECKED	A. WILEY	DATE	10/24/06

BURBANK POWER & WATER
MAGNOLIA POWER PLANT

C.T. ENCLOSURE & PSV MAINTENANCE PLATFORMS PLANS AND SECTIONS

PROJECT / DRAWING NUMBER: 145348-S1005
REV: 0
CODE
AREA

NUT49453 ACAD 15.05
A1ASL015 D1 1=1
12/08/06 11:26:15

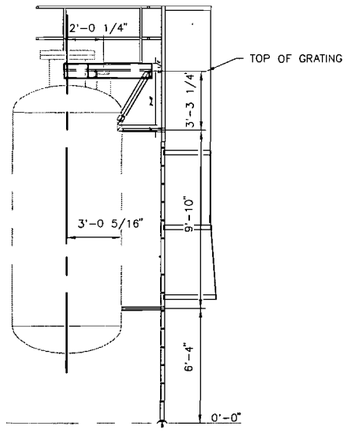

WEAK ACID CATION ELEVATION

SCALE: 1/4"=1'-0"

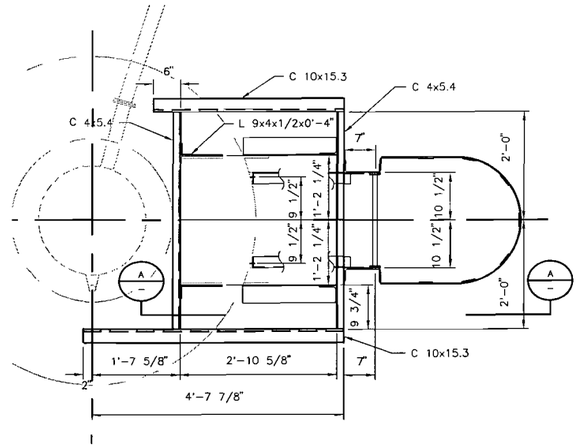

WEAK ACID CATION
PLATFORM FRAMING PLAN

SCALE: 3/4"=1'-0"

NOTES:
1. 2 ASSEMBLIES REQUIRED
2. STEEL FRAMES, INCLUDING HANDRAIL TO BE SHOP ASSEMBLED.

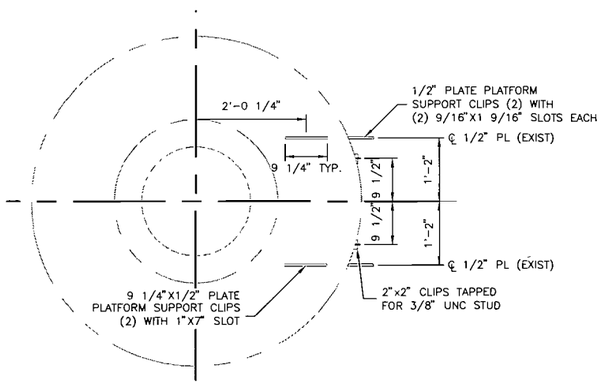

WEAK ACID CATION TANK ACCESS
LADDER AND PLATFORM MOUNTING CLIP PLAN

SCALE: 3/4"=1'-0"

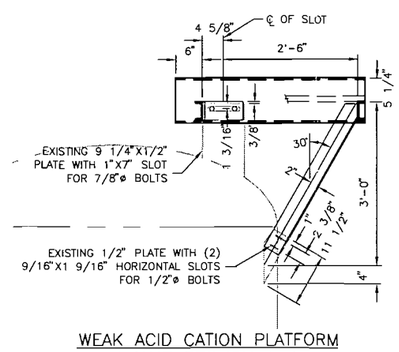

WEAK ACID CATION PLATFORM
FRAME SECTION A–A

SCALE: 3/4"=1'-0"

APPROVED FOR
CONSTRUCTION

NO	DATE	REVISIONS AND RECORD OF ISSUE	DRN	DES	CHK	PDE	APP
0	02/09/2007	ISSUE FOR CONSTRUCTION	MAN	LEK		FAW	

I HEREBY CERTIFY THAT THIS DOCUMENT WAS PREPARED BY ME OR UNDER MY DIRECT SUPERVISION AND THAT I AM A DULY REGISTERED PROFESSIONAL ENGINEER UNDER THE LAWS OF THE STATE OF CALIFORNIA
SIGNED GRAYLYN L. GARR
DATE 02/09/2007 REG NO. 54956

BLACK & VEATCH CORPORATION
ADDRESS

ENGINEER	L. KASHKA	DRAWN	M. NUTT
CHECKED	A. WILEY	DATE	10/30/06

BURBANK POWER & WATER
MAGNOLIA POWER PLANT

WEAK ACID CATION TANK ACCESS PLATFORMS
PLANS AND SECTIONS

PROJECT / DRAWING NUMBER: 145348–S1006
REV: 0
CODE
AREA

NUT49453 ACAD 15.05
A1/SIZE D1 1=1
12/08/06 11:24:30

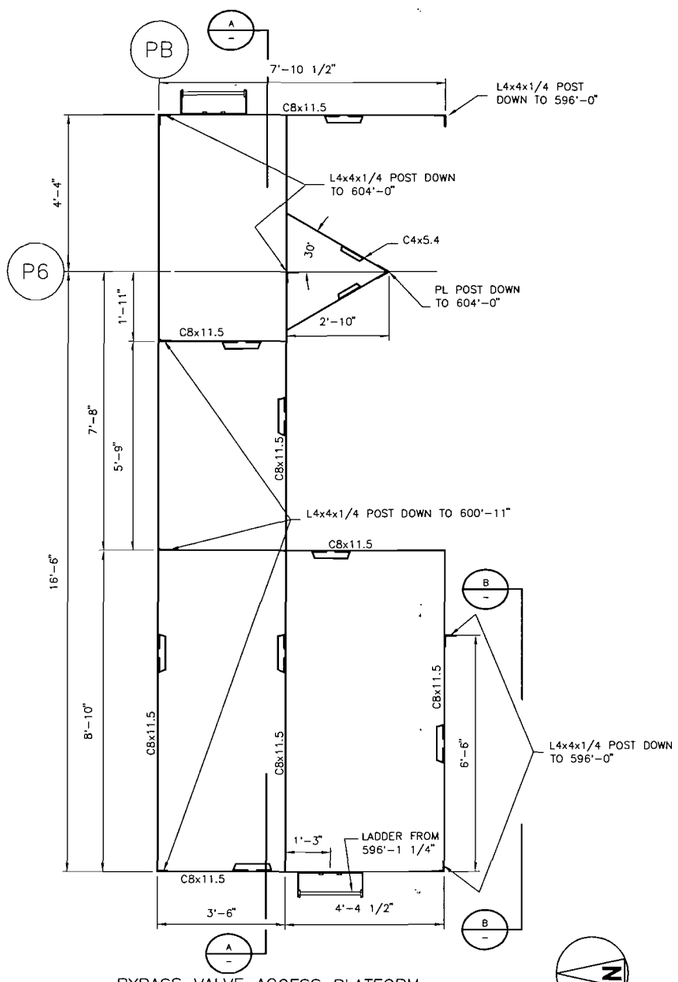

BYPASS VALVE ACCESS PLATFORM
STEEL PLAN @ 605'-10"
SCALE: 1/4"=1'-0"

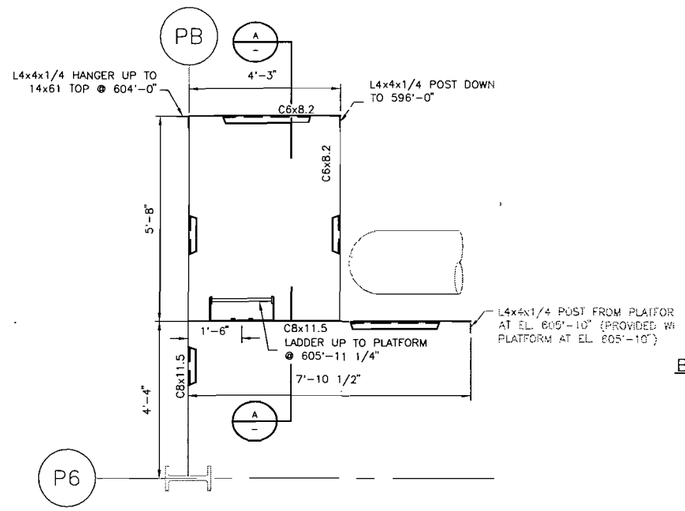

BYPASS VALVE ACCESS PLATFORMS
PLAN @ 601'-0" TOS
SCALE: 1/2"=1'-0"

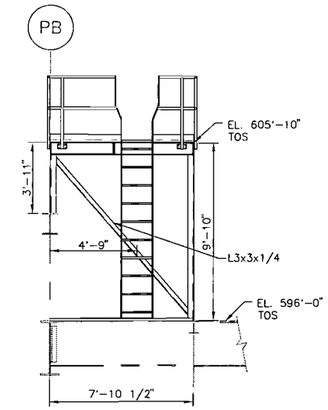

BYPASS VALVE ACCESS PLATFORMS
ELEVATION LOOKING EAST
SCALE: 1/4"=1'-0"

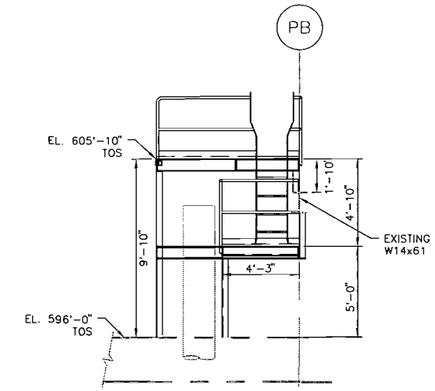

BYPASS VALVE ACCESS PLATFORMS
ELEVATION LOOKING WEST
SCALE: 1/4"=1'-0"

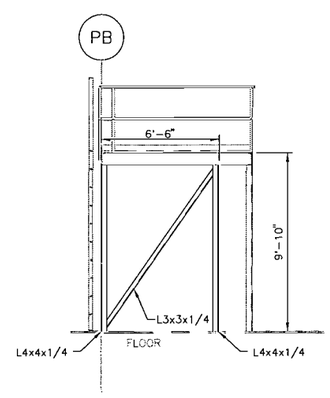

BYPASS VALVE ACCESS PLATFORMS
SECTION B-B LOOKING NORTH
SCALE: 1/4"=1'-0"

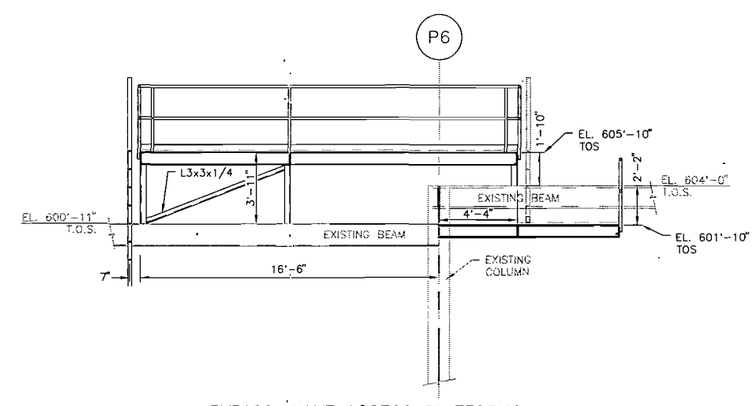

BYPASS VALVE ACCESS PLATFORMS
SECTION A-A LOOKING NORTH
SCALE: 1/4"=1'-0"

APPROVED FOR CONSTRUCTION

NO	DATE	REVISIONS AND RECORD OF ISSUE	DRN	DES	CHK	PDE	APP
0	02/09/2007	ISSUE FOR CONSTRUCTION	MAN	LEK		FAW	

I HEREBY CERTIFY THAT THIS DOCUMENT WAS PREPARED BY ME OR UNDER MY DIRECT SUPERVISION AND THAT I AM A QULY REGISTERED PROFESSIONAL ENGINEER UNDER THE LAWS OF THE STATE OF CALIFORNIA
SIGNED GRAYLYN L. GARR
DATE 02/09/2007 REG NO. 54956

BLACK & VEATCH CORPORATION
ADDRESS

ENGINEER L. KASHKA DRAWN M. NUTT
CHECKED A. WILEY DATE 11/16/06

BURBANK POWER & WATER
MAGNOLIA POWER PLANT

BYPASS VALVES MAINTENANCE ACCESS PLATFORMS PLANS AND SECTIONS

PROJECT DRAWING NUMBER 145348-S1007
REV 0
CODE
AREA

NUT49453 ACAD 15.05
A1A50015 D1 1=1
12/06/06 11:22:55

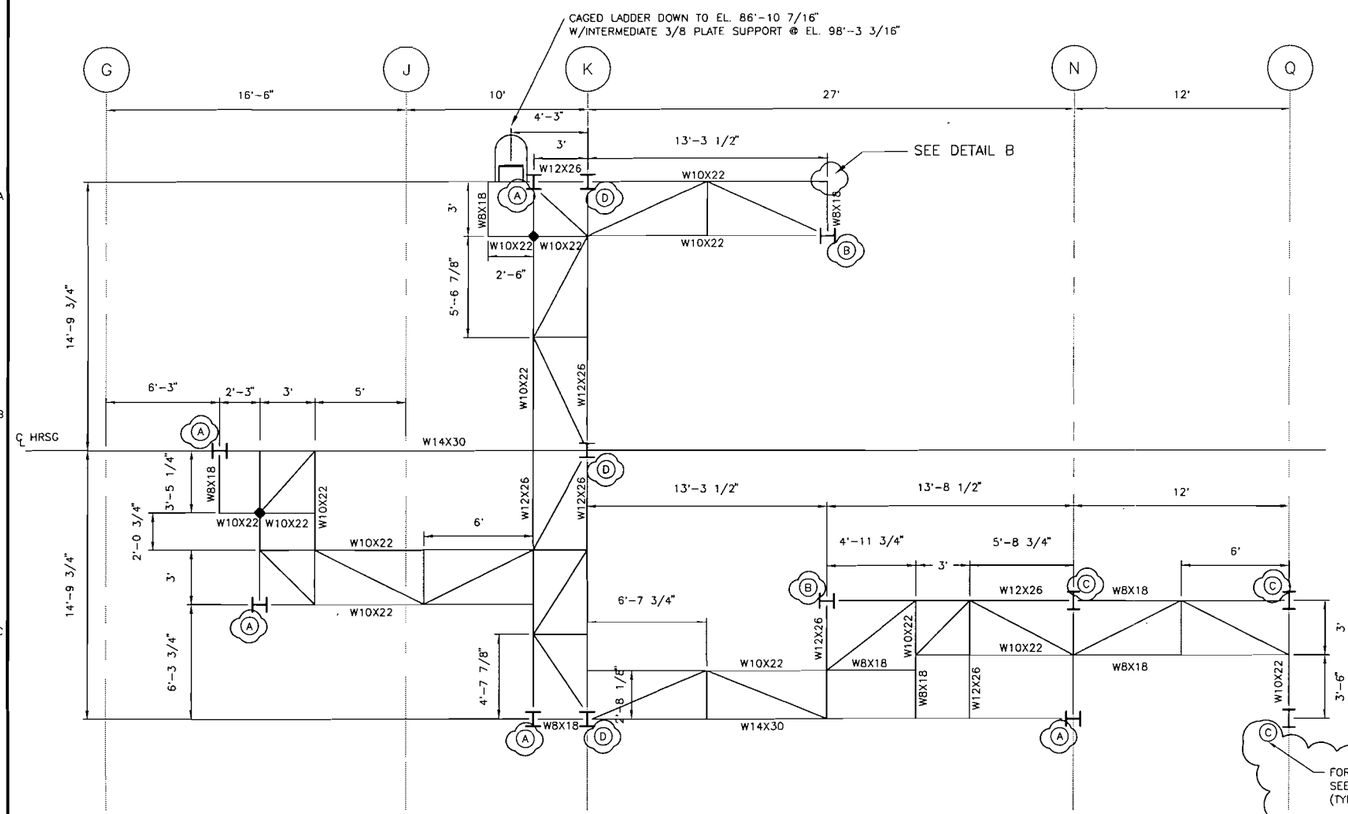

TOP OF STEEL EL. 112'-6 3/16"

SCALE 1/4"=1'-0"

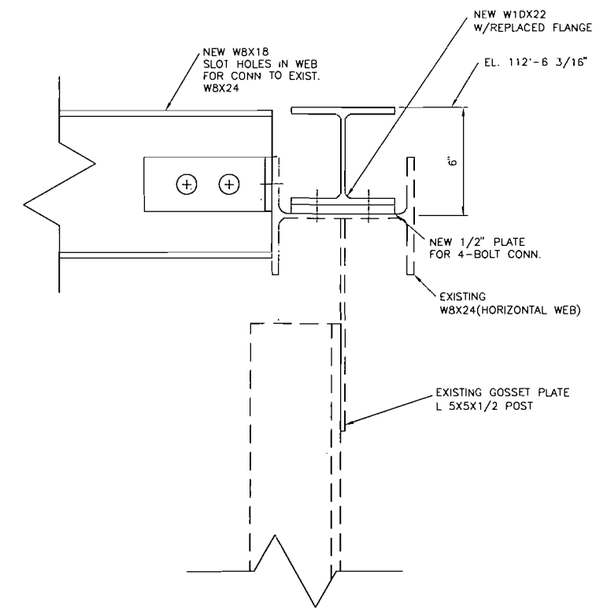

SECTION 1

SCALE 3"=1'-0"

NOTES:

1. EXISTING FRAMING TO BE FIELD DRILLED FOR 4-BOLT CONNECTION AT POSTS.
2. ALL STEEL FRAMING ON THIS SHEET SHALL BE SHOP PAINTED IN ACCORDANCE WITH COATINGS SYSTEM DATA SHEET A6. OWNER WILL SELECT COLOR.
3. HANDRAIL, TOE PLATE, AND GRATING SHALL BE GALVANIZED.
4. ALL DIAGONAL BRACING SHALL BE L3X3X3/16.

FOR POST CONNECTION
SEE DETAIL "A"
(TYP 13 PLACES)

NOTES:
SEE DETAIL A-THIS SHEET FOR NEW TO EXISTING INTERFACE.
(A) INDICATES POST CONNECTION TYPE ALSO ON THIS SHEET.

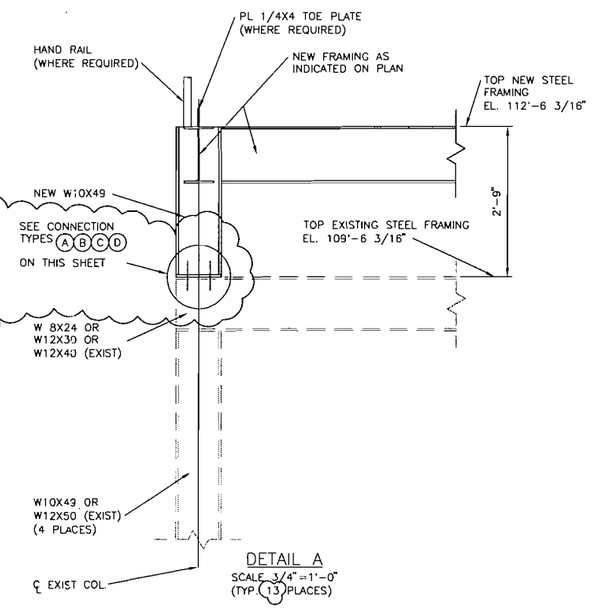

DETAIL A

SCALE 3/4"=1'-0"
(TYP. (13) PLACES)

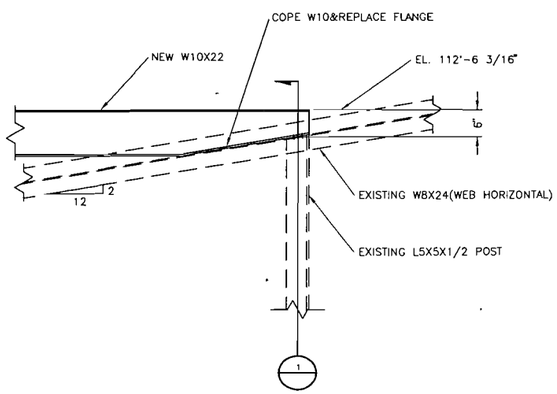

DETAIL B

SCALE 3/4"=1'-0"

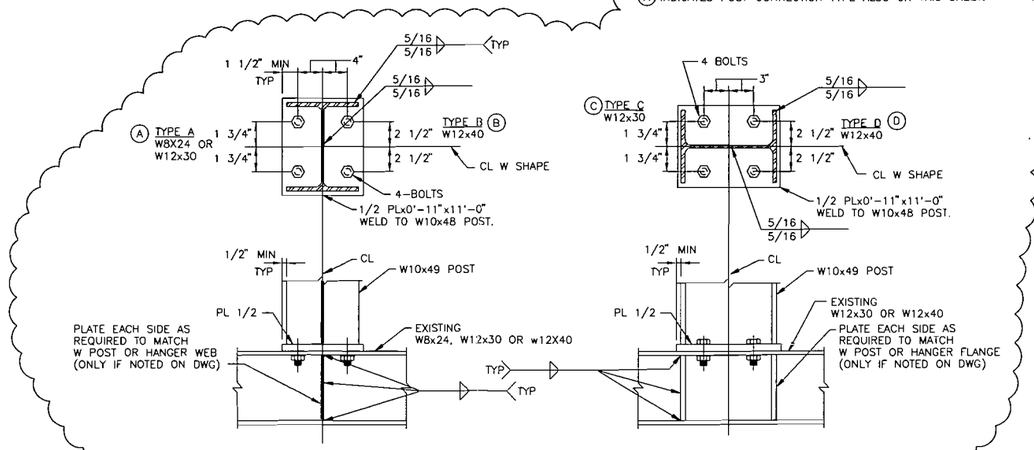

POST CONNECTION DETAILS TYPE A, B, C & D

APPROVED FOR CONSTRUCTION

NO	DATE	REVISIONS AND RECORD OF ISSUE	DRN	DES	CHK	PDE	APP
1	01/17/2008	GENERAL REVISIONS	MAN	LEK		FAW	
D	06/08/2007	ISSUE FOR CONSTRUCTION	MDB	LEK		FAW	

I HEREBY CERTIFY THAT THIS DOCUMENT WAS PREPARED BY ME OR UNDER MY DIRECT SUPERVISION AND THAT I AM A DULY REGISTERED PROFESSIONAL ENGINEER UNDER THE LAWS OF THE STATE OF CALIFORNIA

SIGNED GRAYLYN L. GARR

DATE 01/17/2008 REG NO. 54956

BLACK & VEATCH CORPORATION
@ ADDRESS

ENGINEER L. KASHKA DRAWN M.BATES
CHECKED A. WILEY DATE 11/16/06

BURBANK POWER & WATER
MAGNOLIA POWER PLANT

SILENCER ACCESS PLATFORM
PLANS AND SECTIONS

PROJECT DRAWING NUMBER 145348-S1008 REV 1

CODE

AREA

BATS2451
AVISSOLS D1
06/07/07 14:36:42
ACAD 16.1s (LMS Tech)

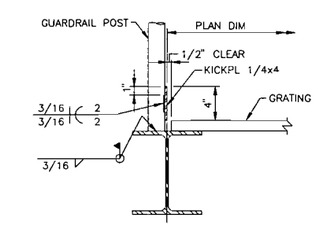

SECTION 1

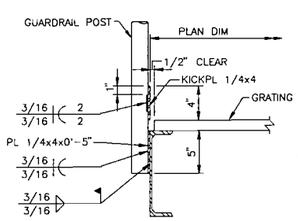

SECTION 2

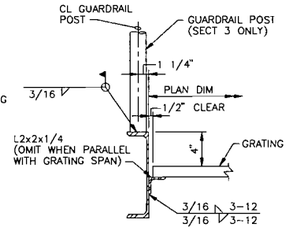

SECTION 3 & 3A

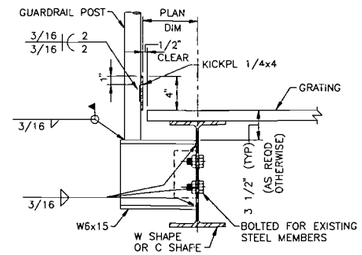

SECTION 4

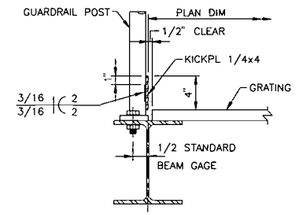

SECTION 9

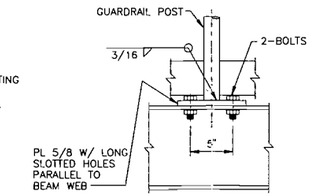

SECTION 10

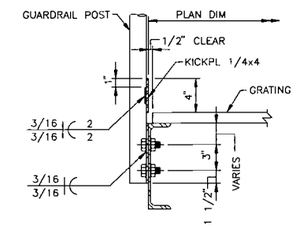

SECTION 11

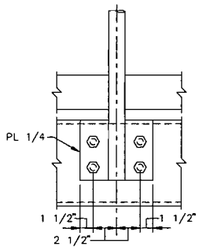

SECTION 12

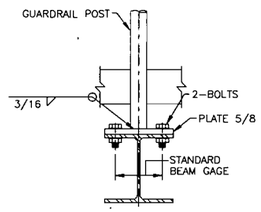

SECTION 15

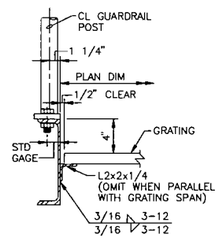

SECTION 13

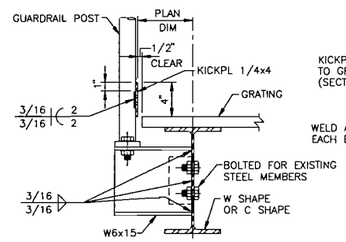

SECTION 14

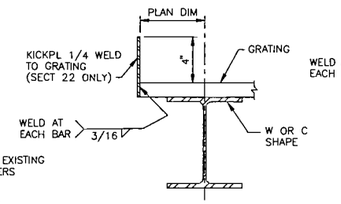

SECTION 22 & 23

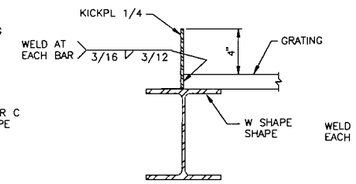

SECTION 24

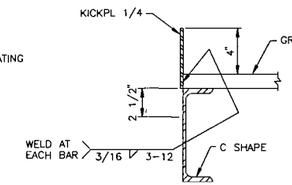

SECTION 25

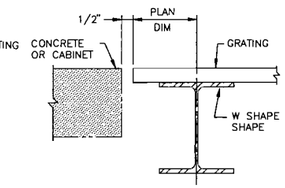

SECTION 26

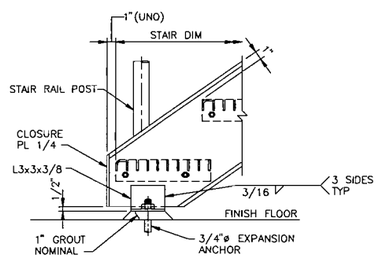

DETAIL A

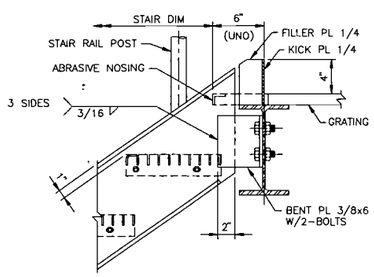

DETAIL B

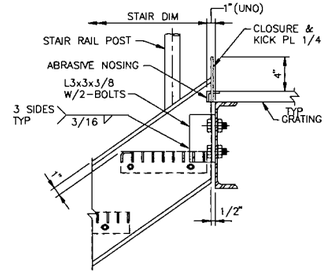

DETAIL C

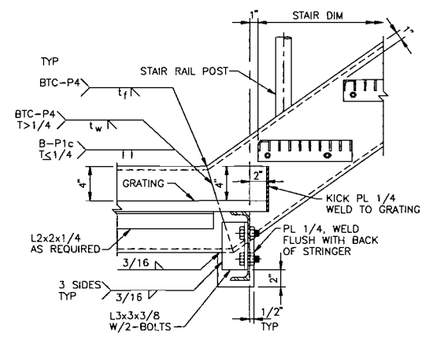

DETAIL D

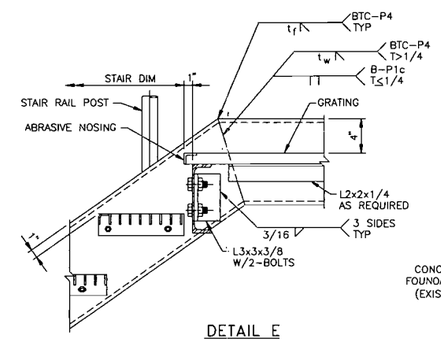

DETAIL E

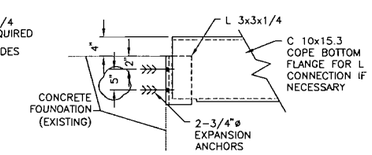

DETAIL J

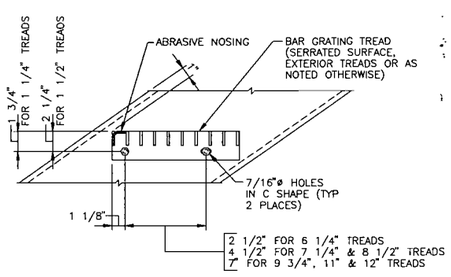

DETAIL F

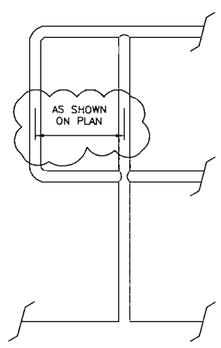

TYPICAL HANDRAIL "P" END
DETAIL G
SCALE: NONE

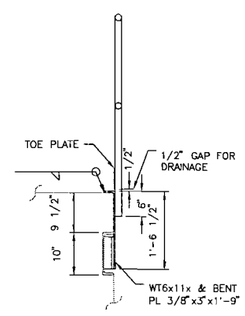

TOP OF C.T. ENCLOSURE
HAND RAIL SECTION 27
SCALE: NONE

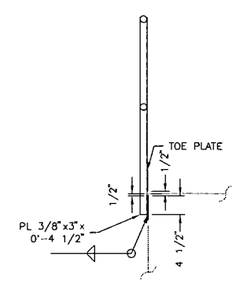

TOP OF C.T. ENCLOSURE
HAND RAIL SECTION 28
SCALE: NONE

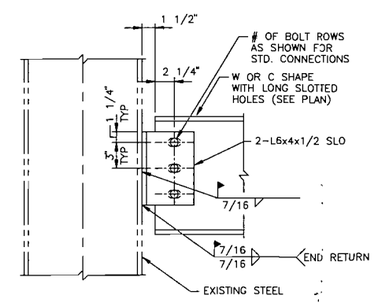

TYPICAL FIELD WELDED BEAM TO
EXISTING STEEL CONNECTION DETAIL

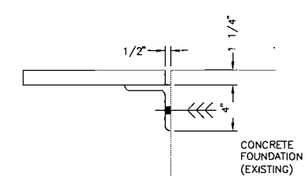

TYPICAL PLATFORM TO EXISTING
CONCRETE EXPANSION ANCHOR DETAIL
DETAIL H
SCALE: NONE

NOTES:

1. SHOP AND FIELD WELDED CONNECTIONS SHOWN ARE TO BE CONSIDERED TYPICAL DETAILS AND REPRESENTATIVE OF SIMILAR CONDITIONS NOT DETAILED. CONNECTION DETAILS SHALL BE ACCEPTED BY ENGINEER.

APPROVED FOR CONSTRUCTION

NO	DATE	REVISIONS AND RECORD OF ISSUE	DRN	DES	CHK	PDE	APP
1	01/17/2008	GENERAL REVISIONS	MAN	LEK		FAW	
0	02/09/2007	ISSUE FOR CONSTRUCTION	MAN	LEK		FAW	

I HEREBY CERTIFY THAT THIS DOCUMENT WAS PREPARED BY ME OR UNDER MY DIRECT SUPERVISION AND THAT I AM A DULY REGISTERED PROFESSIONAL ENGINEER UNDER THE LAWS OF THE STATE OF CALIFORNIA
SIGNED GRAYLYN L. GARR
DATE 01/17/2008 REG NO. 54956

BLACK & VEATCH CORPORATION
ADDRESS

ENGINEER	L. KASHKA	DRAWN	M. NUTT
CHECKED	A. WILEY	DATE	09/27/06

BURBANK POWER & WATER
MAGNOLIA POWER PLANT

MAINTENANCE ACCESS PLATFORMS
TYPICAL SECTIONS AND DETAILS

PROJECT / DRAWING NUMBER: 145348-S1011
REV: 1
CODE
AREA

NUTT9453 D1 ACAD 15.05
A1S015 1=1
12/08/06 15:55:38

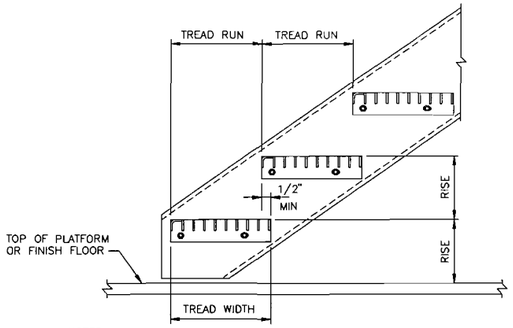

NOTES:

1. TREAD WIDTH SHALL ALWAYS BE GREATER THAN TREAD RUN BY 1/2 INCH MINIMUM.
2. FOR TREAD RUN AND RISE DIMENSIONS, SEE STAIR ELEVATION DETAILS. TREAD RUN DIMENSION ON STAIR ELEVATION DETAILS SHALL BE INDICATED BY "T (11 T @ 11").

TYPICAL STAIR TREAD DIMENSIONS DETAIL

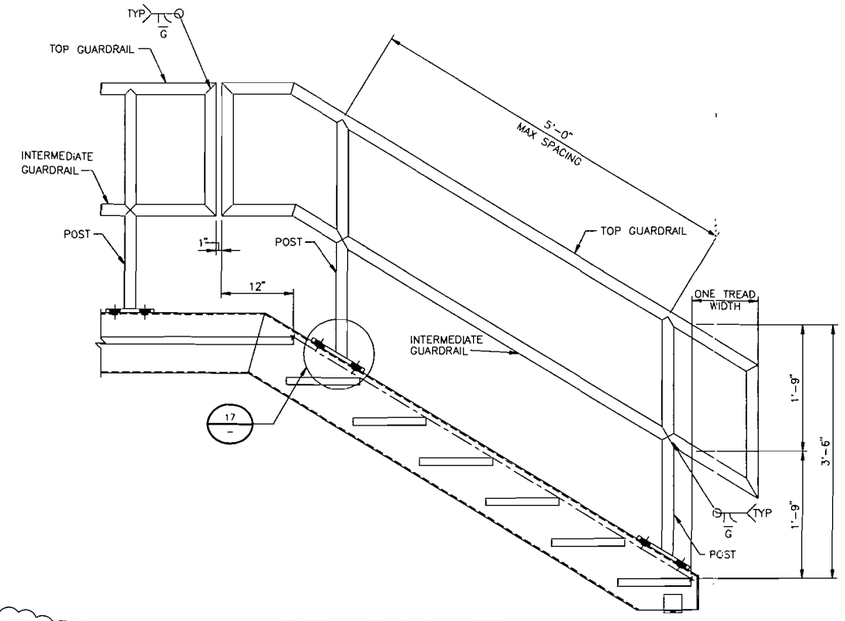

TYPICAL STAIR RAIL DETAIL

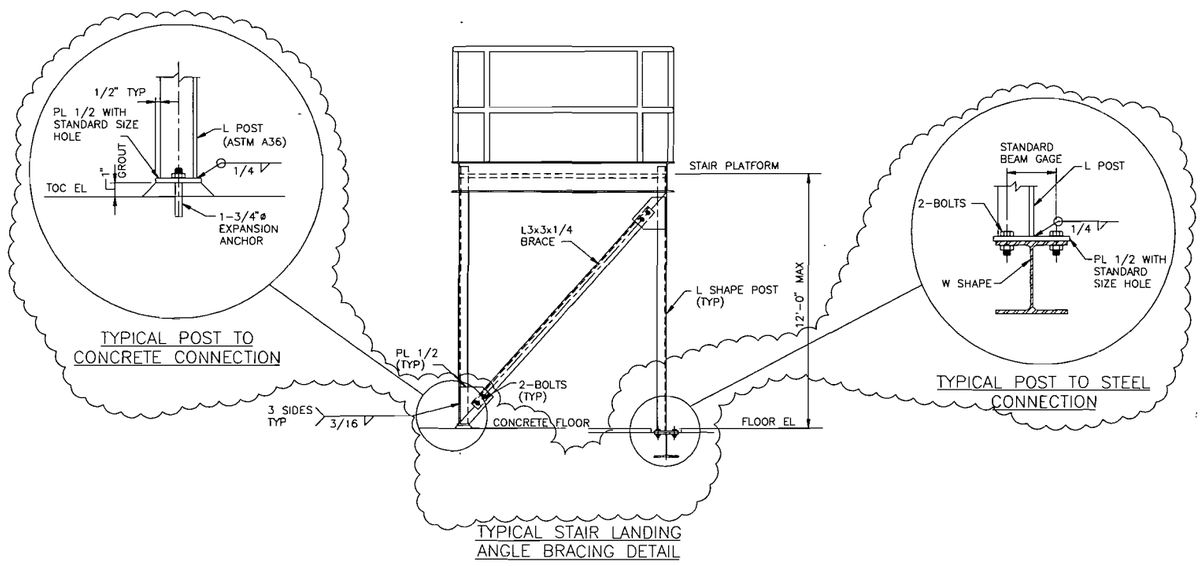

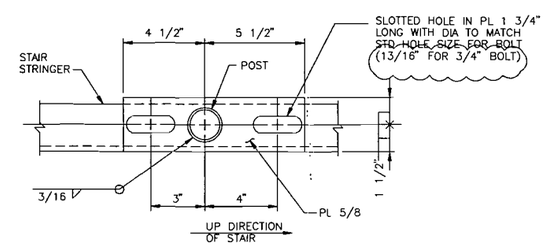

DETAIL 17

APPROVED FOR
CONSTRUCTION

NO	DATE	REVISIONS AND RECORD OF ISSUE	DRN	DES	CHK	PDE	APP
1	01/17/2008	GENERAL REVISIONS	MAN	LEK		FAW	
0	02/09/2007	ISSUE FOR CONSTRUCTION	MAN	LEK		FAW	

I HEREBY CERTIFY THAT THIS DOCUMENT WAS PREPARED BY ME OR UNDER MY DIRECT SUPERVISION AND THAT I AM A DULY REGISTERED PROFESSIONAL ENGINEER UNDER THE LAWS OF THE STATE OF CALIFORNIA

SIGNED GRAYLYN L. GARR

DATE 01/17/2008 REG NO. 54956

BLACK & VEATCH CORPORATION

ENGINEER L. KASHKA DRAWN M. NUTT

CHECKED A. WILEY DATE 09/27/06

BURBANK POWER & WATER
MAGNOLIA POWER PLANT

STAIRS AND LANDINGS
TYPICAL DETAILS

PROJECT DRAWING NUMBER 145348-S1012

REV 1

CODE

AREA

NUT49453 ACAD 15.05
A1A2D1 D1 1=1
12/08/06 11:18:47

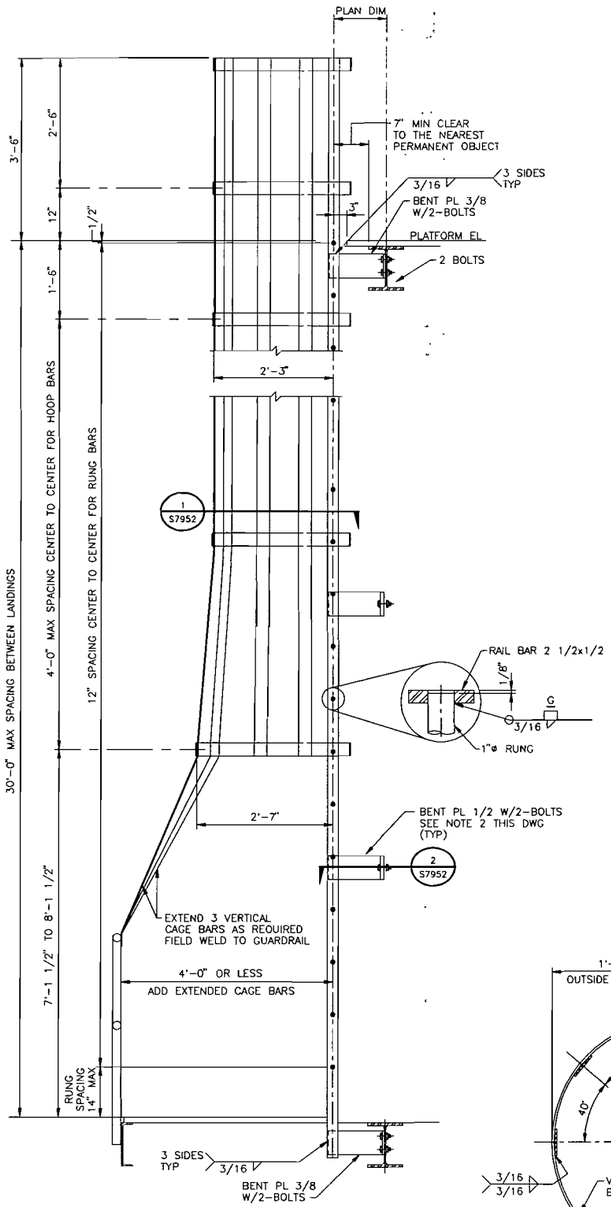

TYPICAL LADDER & CAGE DETAIL

SEE NOTES 1 AND 2

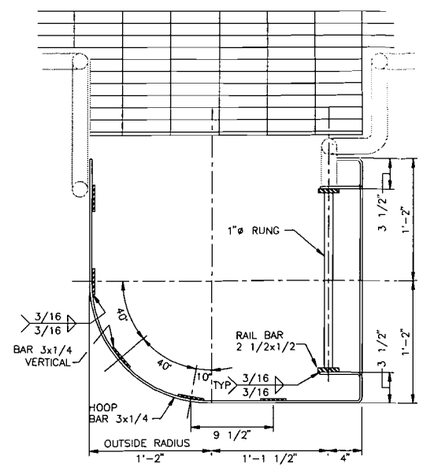

SIDE EXIT CAGE LADDER SECTION 1

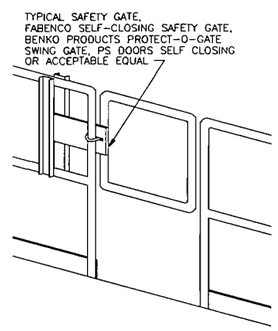

TYPICAL OSHA APPROVED SAFETY GATE

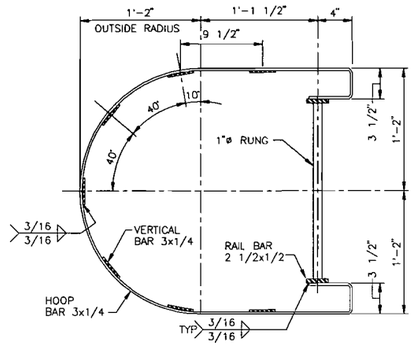

TYPICAL CAGE LADDER SECTION 1

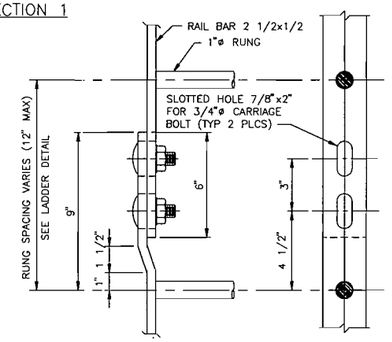

TYPICAL RAIL SPLICE DETAIL

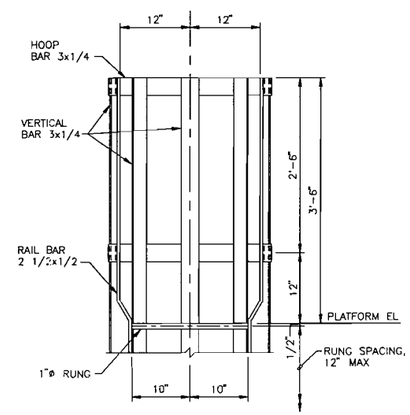

2'-0" WALK-THRU LADDER DETAIL

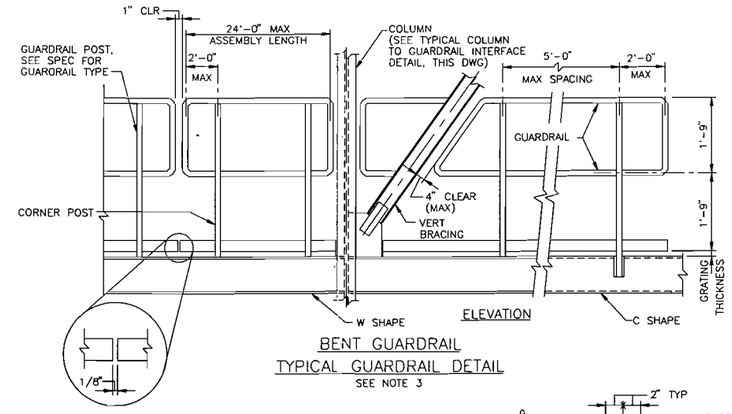

BENT GUARDRAIL

TYPICAL GUARDRAIL DETAIL

SEE NOTE 3

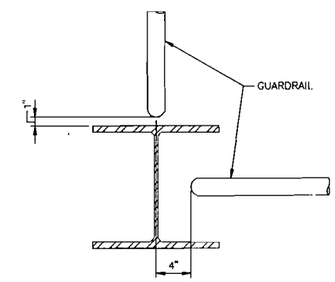

TYPICAL COLUMN TO GUARDRAIL INTERFACE

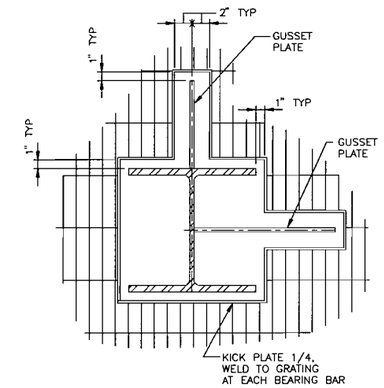

TYPICAL COLUMN OR BRACING BOXOUT

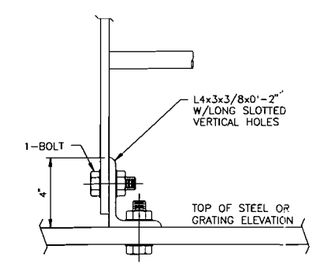

LADDER BASE CONNECTION DETAIL

DETAIL 3

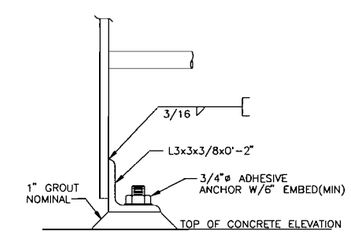

LADDER BASE CONNECTION DETAIL

DETAIL 4

NOTES

1. CAGES SHALL BE PROVIDED ON LADDERS WHERE THE LENGTH OF CLIMB IS MORE THAN 15 FEET TO A MAXIMUM UNBROKEN LENGTH OF 30 FEET OR WHERE THE LENGTH OF CLIMB IS LESS THAN 20 FEET BUT TOP OF LADDER IS MORE THAN 20 FEET ABOVE GROUND LEVEL, FLOOR OR ROOF.
2. LADDER SUPPORT SPACING MAX 10'-0" CENTERS.
3. REFER TO SPECIFICATION 61.4001 FOR GUARDRAIL, HANDRAIL, AND BAR GRATING TYPE AND SIZE.
4. ALL LADDER EXITS SHALL BE PROVIDED WITH A SAFETY GATE.

APPROVED FOR CONSTRUCTION

NO	DATE	REVISIONS AND RECORD OF ISSUE	DRN	DES	CHK	PDE	APP
0	02/09/2007	ISSUE FOR CONSTRUCTION	MAN	LEK		FAW	

I HEREBY CERTIFY THAT THIS DOCUMENT WAS PREPARED BY ME OR UNDER MY DIRECT SUPERVISION AND THAT I AM A DULY REGISTERED PROFESSIONAL ENGINEER UNDER THE LAWS OF THE STATE OF CALIFORNIA

SIGNED GRAYLYN L. GARR

DATE 02/09/2007 REG NO. 54956

BLACK & VEATCH CORPORATION

ENGINEER L. KASHKA DRAWN M. NUTT

CHECKED A. WILEY DATE 09/27/06

BURBANK POWER & WATER
MAGNOLIA POWER PLANT

MAINTENANCE ACCESS PLATFORMS
TYPICAL SECTIONS AND DETAILS

PROJECT DRAWING NUMBER 145348-S1013

REV 0

CODE

AREA

NUT49453 ACAD 15.05
A1MSL015 D1 1=1
12/08/06 11:17:58

NOTE:
1. ALUMINUM TREAD PLATE SHALL BE ATTACHED TO SUPPORT STEEL WITH COUNTERSUNK FLAT HEAD SS BOLTS.

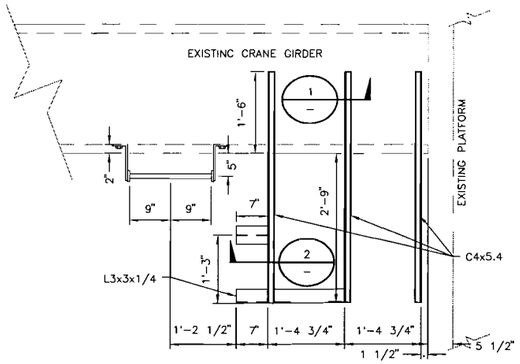

PLATFORM STEEL PLAN

SCALE: 3/4"=1'-0"

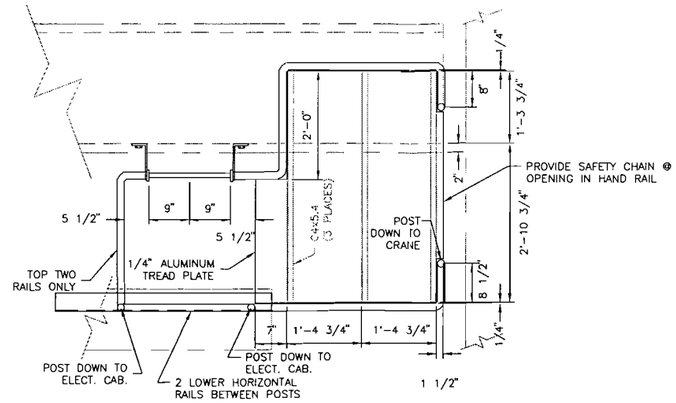

PLATFORM PLATE AND HANDRAIL PLAN

SCALE: 3/4"=1'-0"

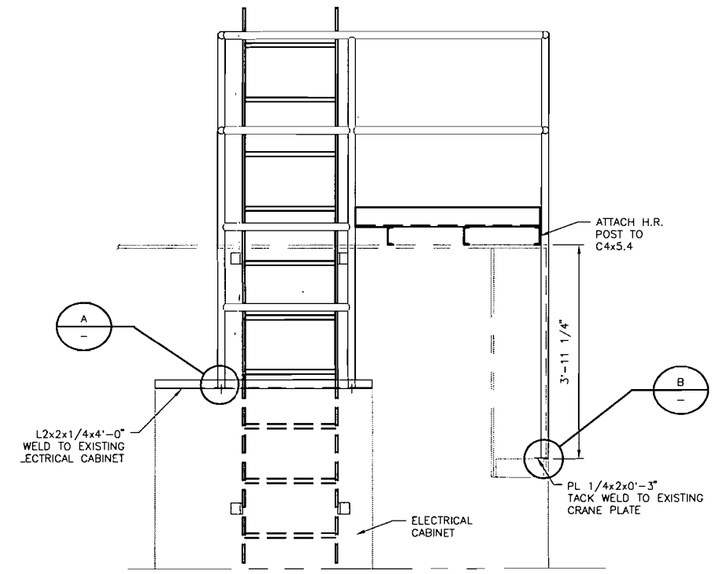

PLATFORM ELEVATION LOOKING EAST

SCALE: 3/4"=1'-0"

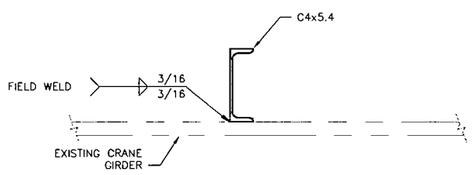

SECTION 1 (TYP 3 PLCS)

SCALE: 3/4"=1'-0"

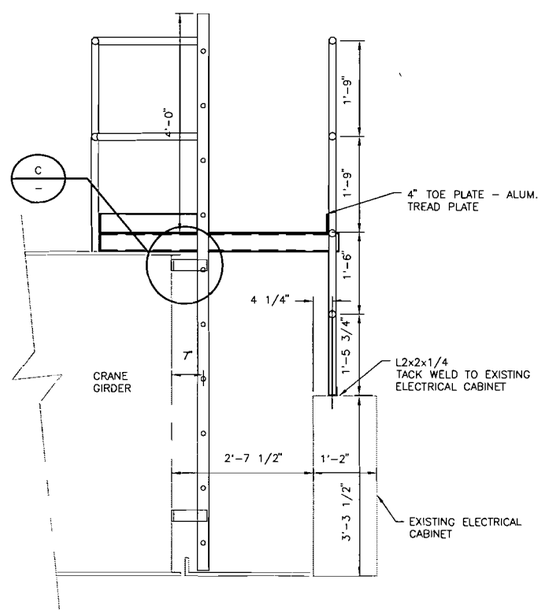

PLATFORM ELEVATION LOOKING SOUTH

SCALE: 3/4"=1'-0"

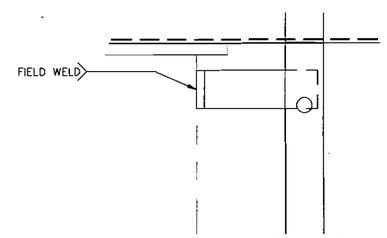

DETAIL C (TYP 4 PLCS)

SCALE: 3/4"=1'-0"

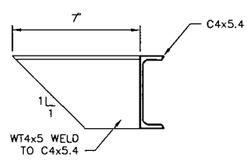

SECTION 2

SCALE: 3/4"=1'-0"

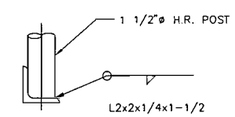

DETAIL A (TYP 2 PLCS)

SCALE: 3/4"=1'-0"

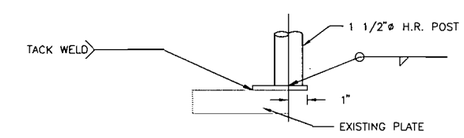

DETAIL B

SCALE: 3/4"=1'-0"

APPROVED FOR CONSTRUCTION

NO	DATE	REVISIONS AND RECORD OF ISSUE	DRN	DES	CHK	PDE	APP
0	02/09/2007	ISSUE FOR CONSTRUCTION	MAN	LEK		FAW	

I HEREBY CERTIFY THAT THIS DOCUMENT WAS PREPARED BY ME OR UNDER MY DIRECT SUPERVISION AND THAT I AM A DULY REGISTERED PROFESSIONAL ENGINEER UNDER THE LAWS OF THE STATE OF CALIFORNIA
SIGNED GRAYLYN L. GARR
DATE 02/09/2007 REG NO. 54956

BLACK & VEATCH CORPORATION
ADDRESS

ENGINEER L. KASHKA DRAWN M. NUTT
CHECKED A. WILEY DATE 03/22/07

BURBANK POWER & WATER
MAGNOLIA POWER PLANT

TURBINE ROOM CRANE ACCESS PLATFORM
STEEL, HANDRAIL & PLATE PLANS & DETAILS

PROJECT DRAWING NUMBER 145348-S1015
REV 0
CODE
AREA

NUT49453 D1 ACAD 16.1s (LMS Tech)
A1ASL015 A=1
05/11/07 10:13:12

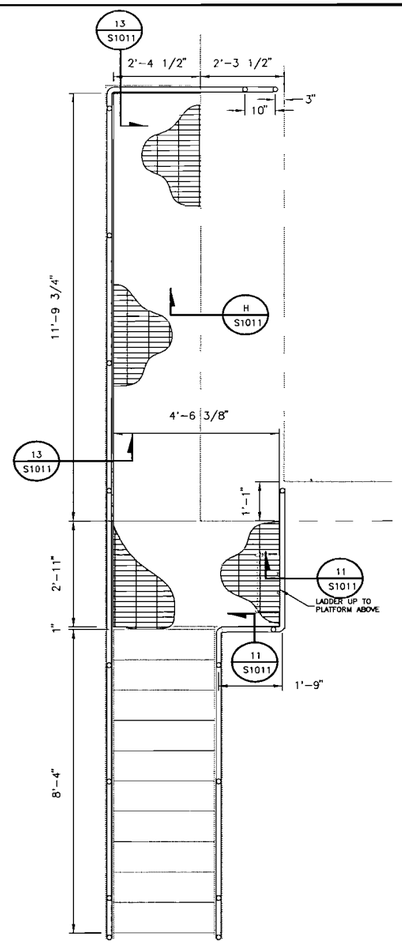

GTG-2: GRATING PLAN
SCALE: 1/2"=1'-0"

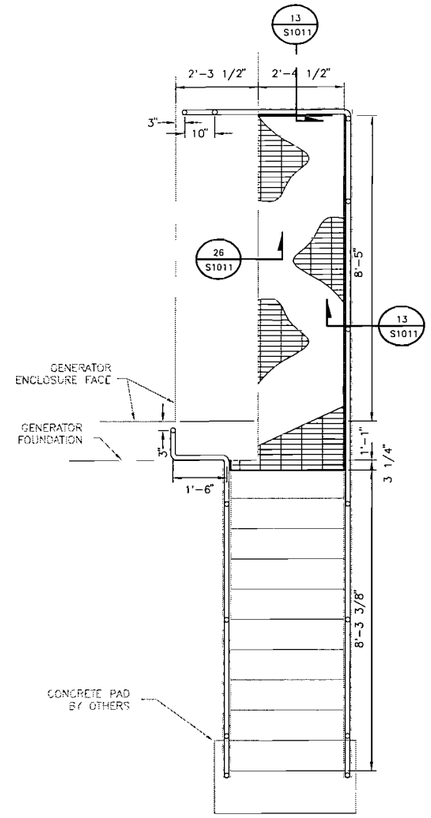

GTG-3: GRATING PLAN
SCALE: 1/2"=1'-0"

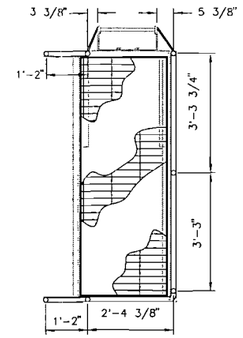

GSC-1 GRATING PLAN
SCALE: 1/2"=1'-0"

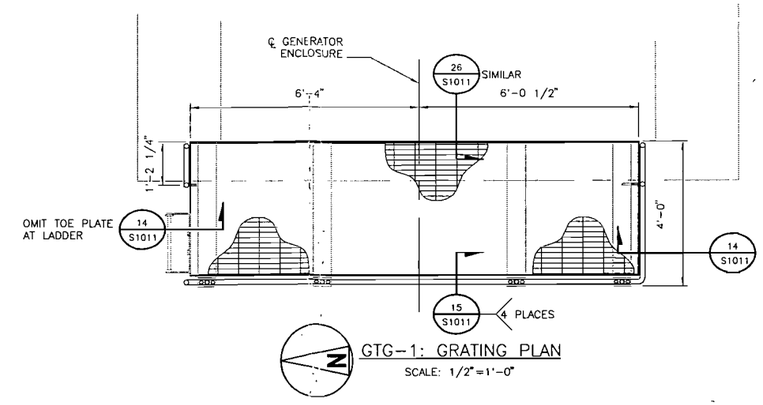

GTG-1: GRATING PLAN
SCALE: 1/2"=1'-0"

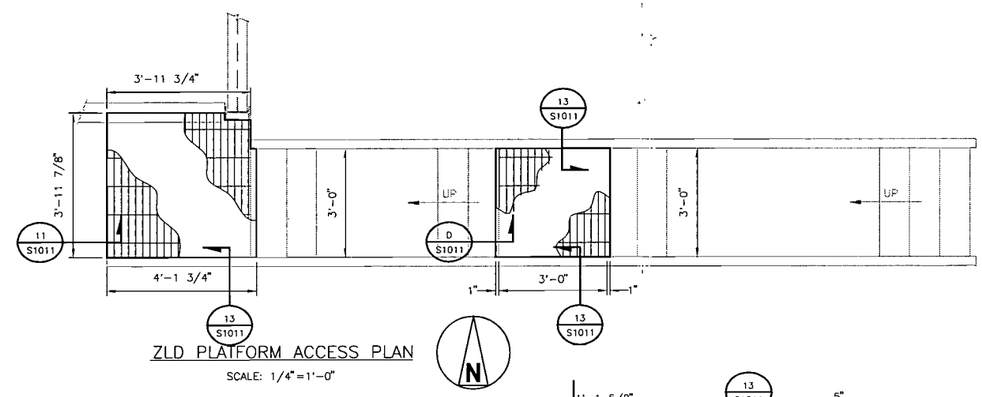

ZLD PLATFORM ACCESS PLAN
SCALE: 1/4"=1'-0"

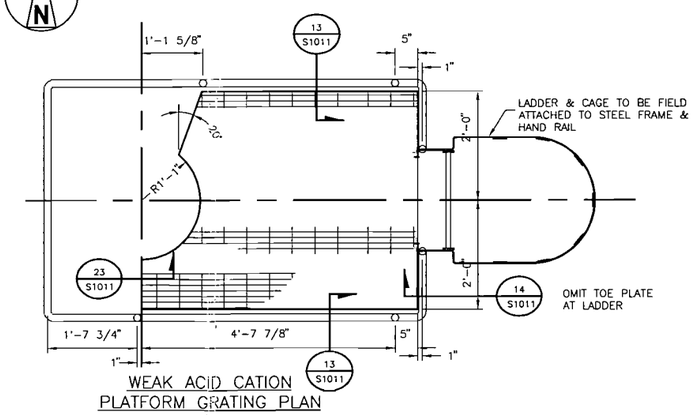

WEAK ACID CATION PLATFORM GRATING PLAN
(2 ASSEMBLIES REQUIRED)
SCALE: 3/4"=1'-0"

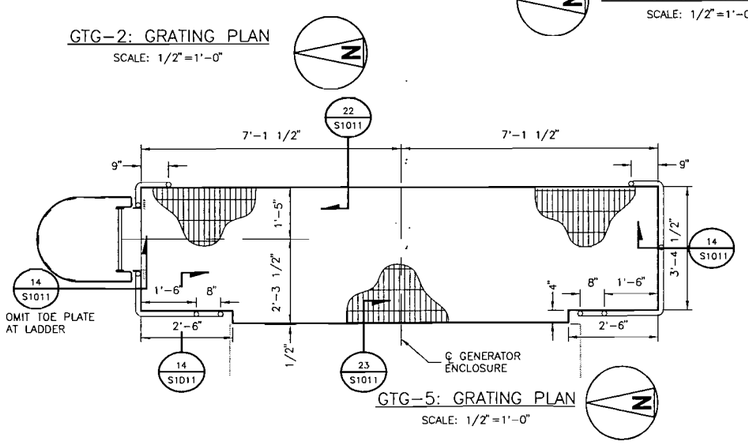

GTG-5: GRATING PLAN
SCALE: 1/2"=1'-0"

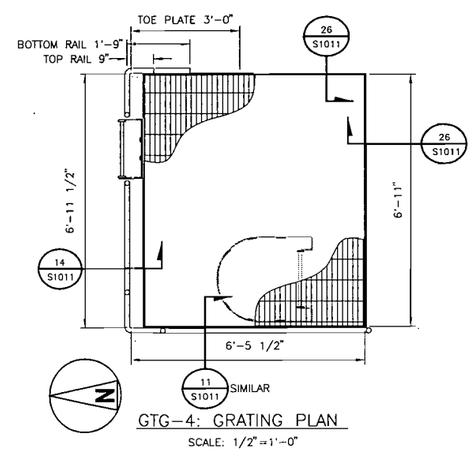

GTG-4: GRATING PLAN
SCALE: 1/2"=1'-0"

NOTE:
SEE DRAWINGS S1000-1006 FOR STEEL FRAMING DETAILS

APPROVED FOR CONSTRUCTION

NO	DATE	REVISIONS AND RECORD OF ISSUE	DRN	DES	CHK	PDE	APP
0	02/09/2007	ISSUE FOR CONSTRUCTION	MAN	LEK		FAW	

I HEREBY CERTIFY THAT THIS DOCUMENT WAS PREPARED BY ME OR UNDER MY DIRECT SUPERVISION AND THAT I AM A DULY REGISTERED PROFESSIONAL ENGINEER UNDER THE LAWS OF THE STATE OF CALIFORNIA
SIGNED GRAYLYN L. GARR
DATE 02/09/2007 REG NO. 54956

BLACK & VEATCH CORPORATION
ADDRESS

ENGINEER	L. KASHKA	DRAWN	M. NUTT
CHECKED	A. WILEY	DATE	11/21/06

BURBANK POWER & WATER
MAGNOLIA POWER PLANT

ACCESS PLATFORMS - GRATING AND HANDRAIL PLANS AND ELEVATIONS

PROJECT / DRAWING NUMBER: 145348-S2000
REV: 0
CODE
AREA

NUT49453 A1/S1015 12/08/06 15:44:54 D1 ACAD 15.05 1=1

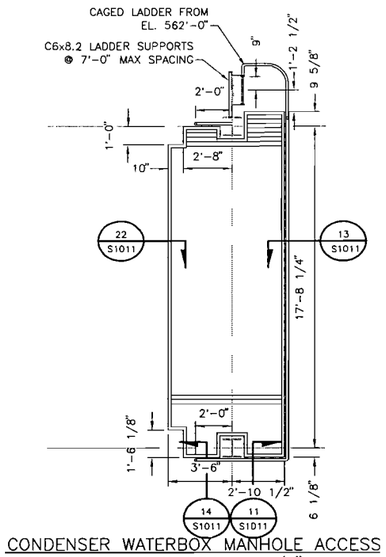

CONDENSER WATERBOX MANHOLE ACCESS GRATING PLAN @ 584'-3 1/4" T.O.G.

SCALE: 1/4"=1'-0"

NOTE:
CONTRACTOR SHALL PROVIDE ANY MISCELLANEOUS GRATING SUPPORT REQUIRED AT COLUMN OPENINGS

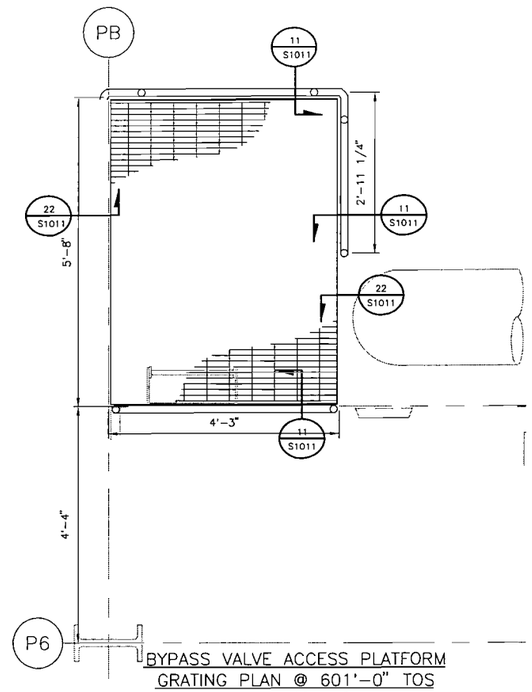

BYPASS VALVE ACCESS PLATFORM GRATING PLAN @ 601'-0" TOS

SCALE: 3/4"=1'-0"

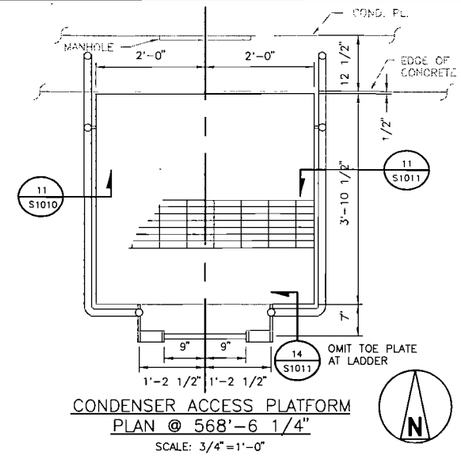

CONDENSER ACCESS PLATFORM PLAN @ 568'-6 1/4"

SCALE: 3/4"=1'-0"

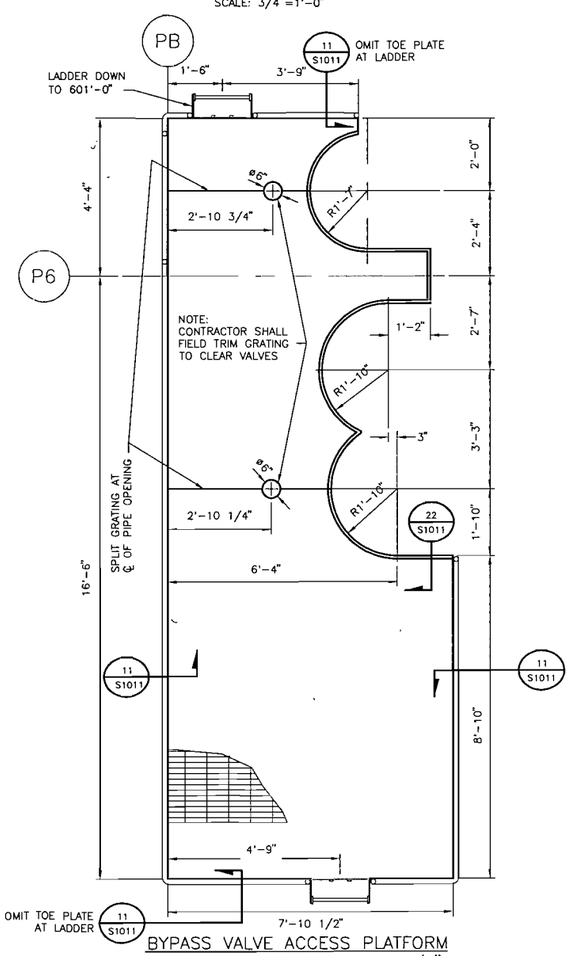

BYPASS VALVE ACCESS PLATFORM GRATING PLAN @ 605'-11 1/4"

SCALE: 1/2"=1'-0"

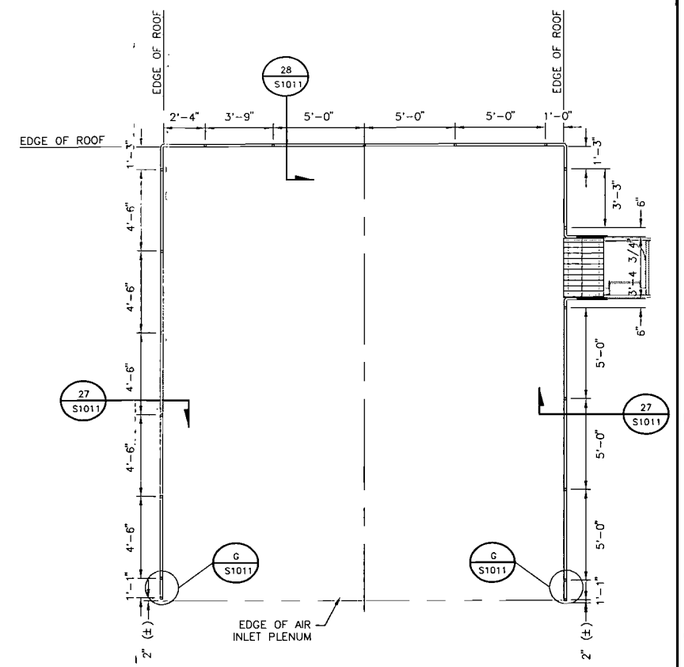

HAND RAIL PLAN AT TOP OF EXISTING C.T. ENCLOSURE

SCALE: 1/4"=1'-0"

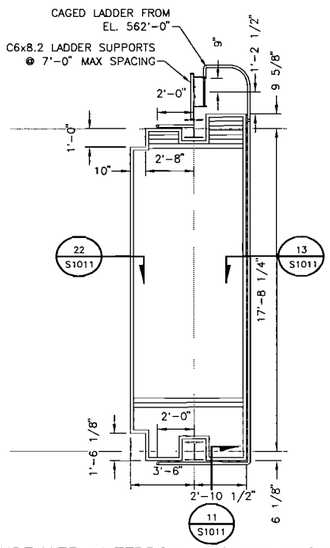

CONDENSER WATERBOX MANHOLE ACCESS GRATING PLAN @ 576'-8" T.O.G.

SCALE: 1/4"=1'-0"

NOTE:
CONTRACTOR SHALL PROVIDE ANY MISCELLANEOUS GRATING SUPPORT REQUIRED AT COLUMN OPENINGS

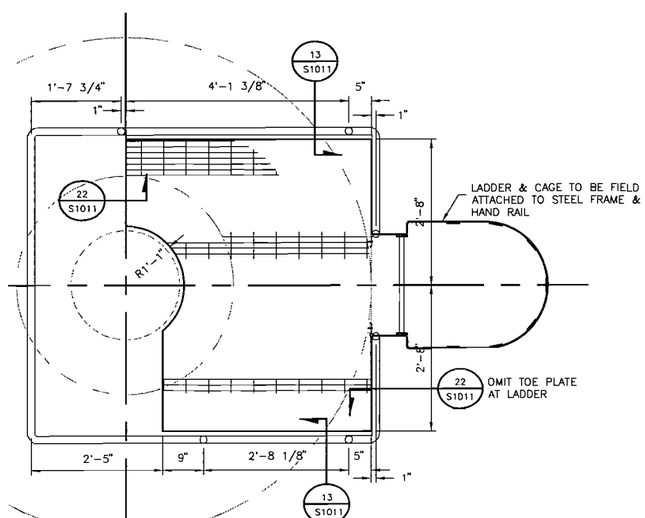

MULTI MEDIA FILTER TANK GRATING PLAN TOP OF GRATING EL. 15'-2 7/8"

SCALE: 3/4"=1'-0"
(2 ASSEMBLIES REQUIRED)

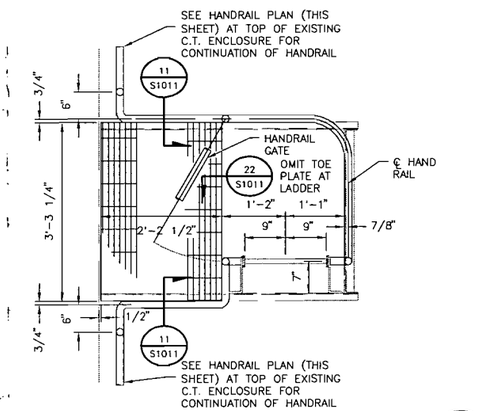

EXISTING C.T. TURB. CMPT. GRATING & HAND RAIL PLAN

SCALE: 3/4"=1'-0"

NOTE:
SEE DRAWINGS S1000-1006 FOR STEEL FRAMING DETAILS

APPROVED FOR CONSTRUCTION

NO	DATE	REVISIONS AND RECORD OF ISSUE	DRN	DES	CHK	PDE	APP
0	02/09/2007	ISSUE FOR CONSTRUCTION	MAN	LEK		FAW	

I HEREBY CERTIFY THAT THIS DOCUMENT WAS PREPARED BY ME OR UNDER MY DIRECT SUPERVISION AND THAT I AM A DULY REGISTERED PROFESSIONAL ENGINEER UNDER THE LAWS OF THE STATE OF CALIFORNIA

SIGNED GRAYLYN L. GARR
DATE 02/09/2007 REG NO. 54956

BLACK & VEATCH CORPORATION
© AQUESS

ENGINEER L. KASHKA DRAWN M. NUTT
CHECKED A. WILEY DATE 11/21/06

BURBANK POWER & WATER
MAGNOLIA POWER PLANT

ACCESS PLATFORMS – GRATING AND HANDRAIL PLANS AND SECTIONS

PROJECT / DRAWING NUMBER: 145348-S2001
REV: 0
CODE
AREA

NUT49453 ACAD 16.1s (LMS Tech)
11/16/05 D1 1=1
02/09/07 10:37:50

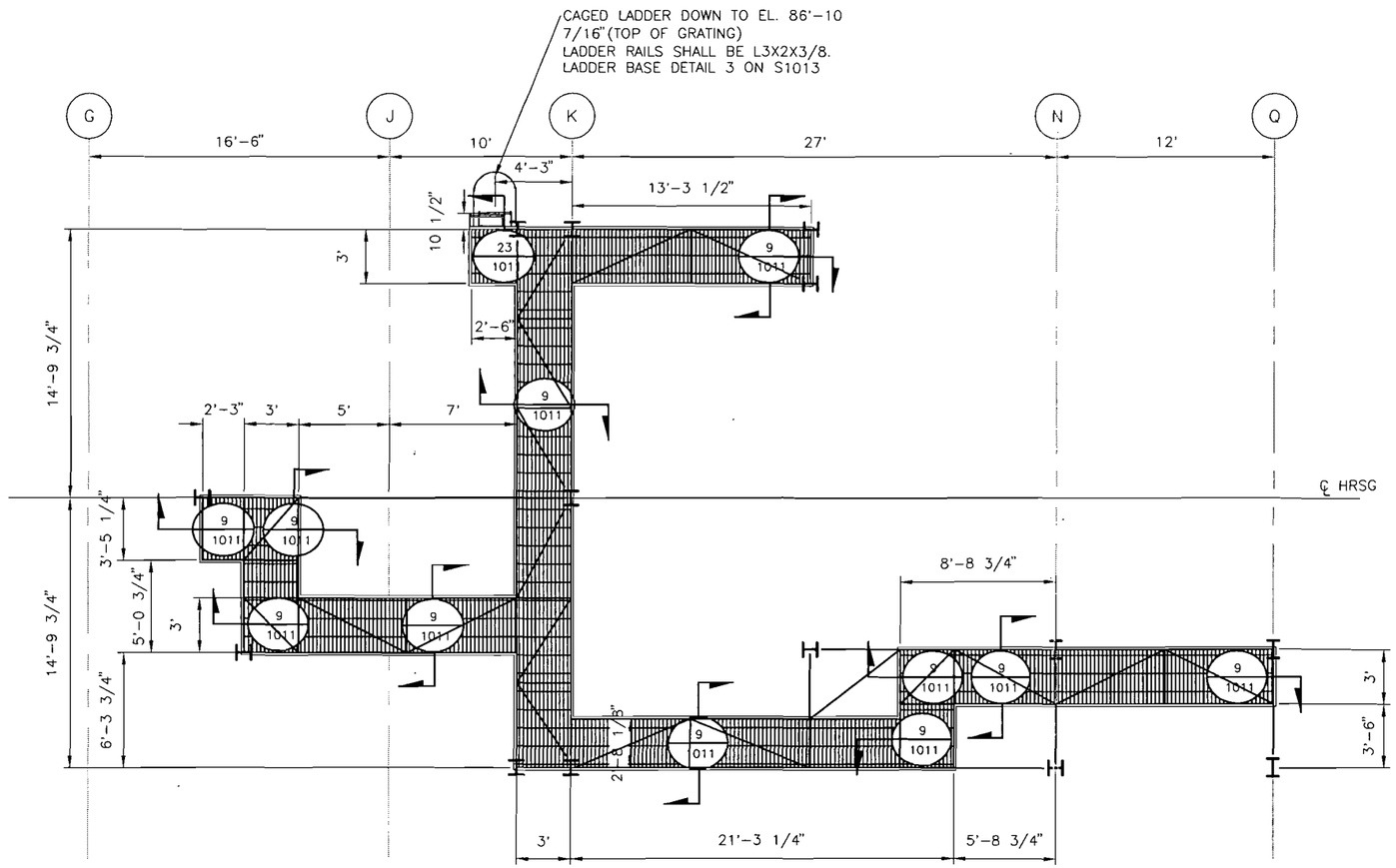

TOP OF GRATING EL. 112'-7 3/16"

SCALE 1/4"=1'-0"

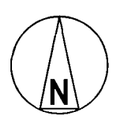

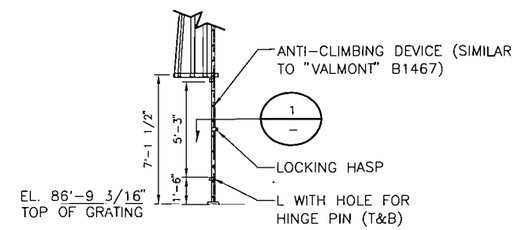

ELEVATION - LADDER ANTI-CLIMB DEVICE

SCALE 1/4"=1'-0"

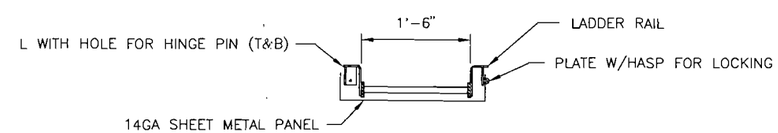

SECTION 1

SCALE 1"=1'-0"

APPROVED FOR CONSTRUCTION

NO	DATE	REVISIONS AND RECORD OF ISSUE	DRN	DES	CHK	PDE	APP
0	06/08/2007	ISSUE FOR CONSTRUCTION	MDB	LEK		FAW	

I HEREBY CERTIFY THAT THIS DOCUMENT WAS PREPARED BY ME OR UNDER MY DIRECT SUPERVISION AND THAT I AM A DULY REGISTERED PROFESSIONAL ENGINEER UNDER THE LAWS OF THE STATE OF CALIFORNIA

SIGNED GRAYLYN L. GARR

DATE 06/08/2007 REG NO. 54956

BLACK & VEATCH CORPORATION

ENGINEER L. KASHKA DRAWN M. BATES

CHECKED A. WILEY DATE 11/16/06

BURBANK POWER & WATER
MAGNOLIA POWER PLANT

ACCESS PLATFORMS-GRATING AND HANDRAIL PLANS AND SECTIONS

PROJECT DRAWING NUMBER 145348-S2002

REV 0

CODE

AREA

BA15245 1
A15245 15
06/07/07 14:36:59
D1 =1
ACAD 16.1s (LMS Tech)

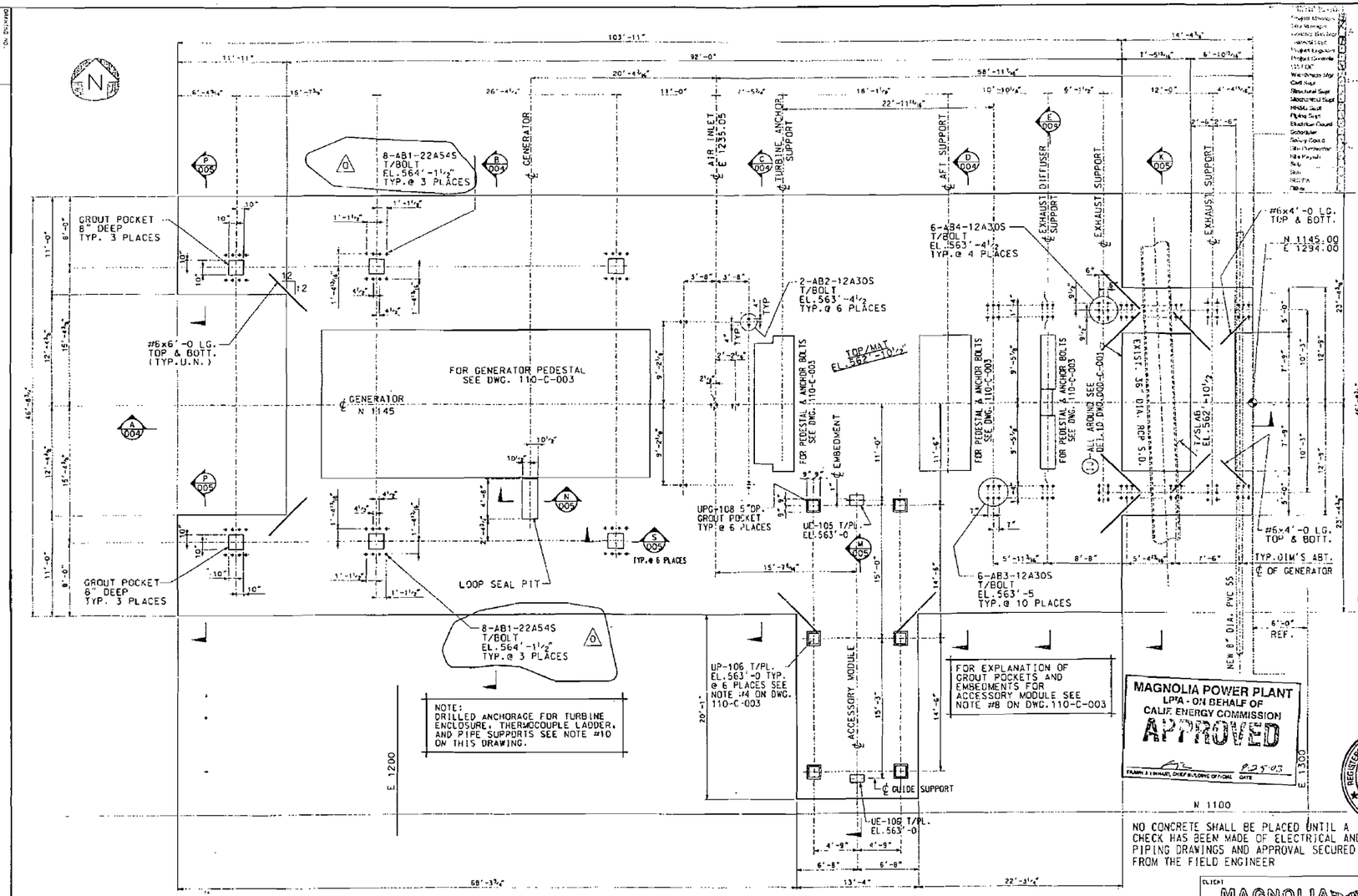

GENERAL NOTES

1. FOR GENERAL CONCRETE NOTES SEE DWG.000-C-001
2. CONCRETE SHALL NOT PROJECT ABOVE RESTRAINING BLOCK ASSEMBLIES.
3. GROUT SHALL NOT PROJECT ABOVE FOUNDATION EMBEDMENTS.
4. THE CLEARANCE SPACE BETWEEN THE ANCHOR BOLT AND BASE PL SHALL BE KEPT FREE OF GROUT.
5. FOR UNDERGROUND AND EMBEDDED ELECTRICAL SEE 112-E-124. FOR UNDERGROUND AND EMBEDDED PIPING SEE 262-P-510.
6. CONFORM TO THE INITIAL & FINAL SETTINGS TORQUES AS OUTLINED ON G.E. DWG'S.207D5165 (5 SHEETS) REV.--,123E7256 (6 SHEETS) REV.--AND GEK 106957 TURBINE GENERATOR FOUNDATION INTERFACE DETAILING,DESIGN & FOUNDATION INSTALLATION RECOMMENDATIONS NOVEMBER 1998.
7. FOUNDATION SHALL BE CONSTRUCTED IN COMPLIANCE WITH DOCUMENT GEK 106957 TURBINE-GENERATOR FOUNDATION INTERFACE DETAILING,DESIGN & FOUNDATION INSTALLATION RECOMMENDATIONS. NOVEMBER 1998. SEE THIS DOCUMENT FOR BOLT, BASE PLATE AND EMBEDMENT PLACEMENT TOLERANCES AND BASE PLATE, GROUT POCKET PREPARATION ETC.
8. REFER TO REFERENCED G.E. DRAWINGS FOR ADDITIONAL NOTES.
9. FOR REFERENCE DRAWINGS SEE DWG.110-C-002
10. ADHESIVE ANCHORING SHALL BE HILTI HIT HY150 ANCHORING SYSTEM, WITH A36 HAS THREADED ANCHOR RODS, OR ANCHORS AS SPECIFIED BY G.E.

½"DIA.ANCHOR, 4½"EMB., 3½"PROJ.
⅝"DIA.ANCHOR, 5" EMB. 3½" PROJ.
¾"DIA.ANCHOR, 6⅝"EMB., 3½"PROJ.
1"DIA.ANCHOR, 8¼"EMB., 4" PROJ.
SUBSTITUTE ½" ANCHORS FOR GE SPECIFIED ⅝" ANCHORS

LEGEND

(N) INDICATES ISOLATION JOINT

MAGNOLIA POWER PLANT
LP'A - ON BEHALF OF
CALIF. ENERGY COMMISSION
APPROVED
8-25-03
FRANK J. EHNAFT, CHIEF BUILDING OFFICIAL DATE

RECEIVED
AUG 18 2003

REGISTERED PROFESSIONAL ENGINEER
JAMES JOSEPH HEBERT
No. C 052557
Exp. 12-31-03
CIVIL
STATE OF CALIFORNIA

RECEIVED
OCT 01 2003

JAMES S. STACK
REGISTERED PROFESSIONAL ENGINEER
CIVIL
No. 28745-E
STATE OF CALIFORNIA
13 AUG 03
EXP. 30 SEP 03

NO CONCRETE SHALL BE PLACED UNTIL A CHECK HAS BEEN MADE OF ELECTRICAL AND PIPING DRAWINGS AND APPROVAL SECURED FROM THE FIELD ENGINEER

FOUNDATION PLAN

RELEASED FOR CONSTRUCTION

THIS DRAWING IS NOT VALID UNLESS THE LATEST REVISION INITIALS ARE HANDWRITTEN

REVISIONS NO	DESCRIPTION	BY	CH	APPROVED	DATE

REVISIONS NO	DESCRIPTION	BY	CH	APPROVED	DATE
0	REVISED T/BOLT & ADDED ANCHOR	ABR	JSS		
C	REVISED GENERAL NOTES & REMOVED HOLD	RLS	JSS		
B	ADDED SECTION NO.5 IN MAT	FAB	JSS		
A	ISSUED FOR APPROVAL	FAB	JSS		

RECORDS		
DESIGNED	U.PATEL	
DRAWN	T.BOMMAR	19MAY03
CHECKED	J.STACK	29MAY03
APPROVED 1		
APPROVED 2		
CLIENT APP'L		

DATE TO	A	B	C
CLIENT			
FIELD			

0	1	2	3	4	5	6	7

TITLE: GAS TURBINE & GENERATOR FOUNDATION & ANCHOR BOLTS PLAN

CLIENT: MAGNOLIA POWER PROJECT

KVAERNER BOUNDER INC.
FIELD OFFICE
AKER KVÆRNER™
E&C Division
San Francisco, California

SCALE 1/8"=1'-0" | PROJ. NO. 800400 | REVISION 0
DRAWING NO. 110-C-001 | 0

0 JSS 05AUG03 C JSS 3JUL03 B JSS 25JUN03 A JSS 19JUN03

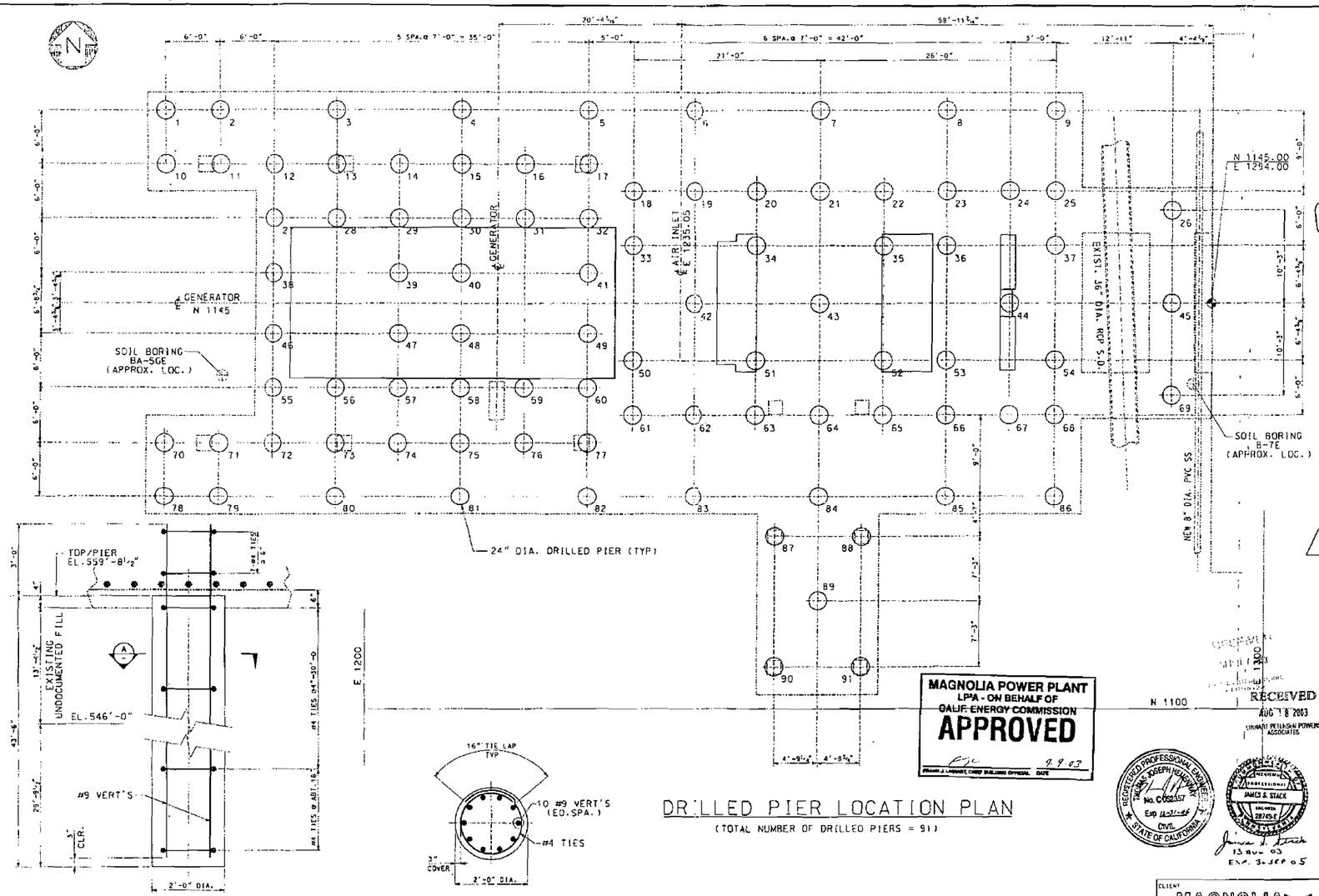

TYPICAL PIER SECTION

3/4"=1'-0

SECTION A

SCALE 3/4"=1'-0 THIS DWG.

DRILLED PIER LOCATION PLAN

(TOTAL NUMBER OF DRILLED PIERS = 91)

MAGNOLIA POWER PLANT
LPSA - ON BEHALF OF
CALIF. ENERGY COMMISSION
APPROVED
9-9-03

RECEIVED
AUG 18 2003
LINHART PETERSON POWERS ASSOCIATES

REGISTERED PROFESSIONAL ENGINEER
THOMAS JOSEPH KIRSCHMAN
No. C052357
Exp. 12-31-05
CIVIL
STATE OF CALIFORNIA

REGISTERED PROFESSIONAL ENGINEER
JAMES A. STACK
No. 28705
CIVIL
STATE OF CALIFORNIA

13 Aug 03
Exp. 30 SEP 05

NOTES

1. PIER CAPACITIES: 150K ALLOWABLE COMPRESSION AT 0.28" DEFLECTION. 22K LATERAL SHEAR AT 0.28" DEFLECTION WITH 23K MOMENT. 18K ALLOWABLE UPLIFT.
2. THE GEOTECHNICAL ENGINEER OF RECORD SHALL PROVIDE OBSERVATION AND TESTING SERVICES DURING GRADING AND FOUNDATION PHASES OF CONSTRUCTION. INSPECTION AND TESTING REPORTS SHALL BE FORWARDED TO THE CDC.
3. FOR GENERAL NOTES SEE DWG.110-C-005
4. ALL DRILLED PIERS SHALL BE CONSTRUCTED IN ACCORDANCE WITH GENERAL SPECIFICATION C-005, DRILLED PIER INSTALLATION △0

REFERENCE DWG'S

GE DRAWINGS

INLET FILTER SUPPORT FDN. INTERFACE - PLAN 361B7722 (7 SHEETS) REV.-

FDN. INTERFACE - ACCESSORY MODULE 20604185 (2 SHEETS) REV.-4

OUTLINE FDN INTRFC. - GAS TURBINE PKG.20705185 (5 SHEETS) REV.-

OUTLINE FDN. INTRFC. - INLET SUPT.ARRGNT.20705192 REV.-

OUTLINE FDN. INTRFC. - EXHAUST SUPT.ARRGNT.20705198 REV.-

OUTLINE FDN. INTRFC. - CROSS & BARRIER WALL 20705192 REV.-

OUTLINE FDN. INTRFC. - TURBINE ENCLOSURE 20705187 (2 SHEETS) REV.-

OUTLINE FDN. INTRFC. - PIPE SUPPORTS 20604165 (4 SHEETS) REV.-A △0

OUTLINE FDN. INTRFC. - TURBINE COUPLE ACCESS LADDER 20705190 REV.-

KVAERNER DRAWINGS

GENERAL CONCRETE NOTES DWG.000-C-001

SITE UNDERGROUND UTILITIES AREA LAYOUT DWG.010-V-006

GAS TURBINE & GENERATOR - FDN. & ANCH.BOLT PLAN 110-C-001

GAS TURBINE & GENERATOR - FDN. ANCH.BOLT & FDN.PLATE LOC. 110-C-003

GAS TURBINE & GENERATOR - FDN. SECTIONS & DETAILS 110-C-004 & 110-C-005

GAS TURBINE & GENERATOR - FDN. ANCHOR BOLT SCHEDULE 110-C-006

COMBUSTION TURBINE GENERATOR AREA - UNDERGROUND CONDUIT 112-E-324

COMBUSTION TURBINE GENERATOR AREA - PIPING 202 P-570

RELEASED FOR CONSTRUCTION

CLIENT: MAGNOLIA POWER PROJECT

AKER KVÆRNER™ E&C Division
San Francisco, California

TITLE: GAS TURBINE & GENERATOR DRILLED PIER LOCATION PLAN

SCALE 3/4"=1'-0 PROJ. NO. 800400

DRAWING NO. 110-C-002 △0

THIS DRAWING IS NOT VALID UNLESS THE LATEST REVISION INITIALS ARE HANDWRITTEN

REVISIONS NO.	DESCRIPTION	BY	CH	APPROVED	DATE

REVISIONS NO.	DESCRIPTION	DY	CH	APPROVED	DATE
	ADDED SPEC. REF. AND DWG. REF., REV.	AAR	JSS		
△B	REV. TYP. PIER SECT., NOTES & REF. DRAWINGS	HLS	JSS		
△A	ISSUED FOR APPROVAL	FJB	JSS		

DESIGNED	M.PATEL		DATE TO	A	B	C	0	1	2	3	4	5	6	7			
DRAWN	F.BOCHAR	23MAY03	CLIENT														
CHECKED	J.STACK	23MAY03	FIELD														
APPROVED 1			O.D.				8/15										
APPROVED 2																	
CLIENT APP'L																	

△0 JSS 05AUG03 △B JSS 3JUL03 △A JSS 19JUN03

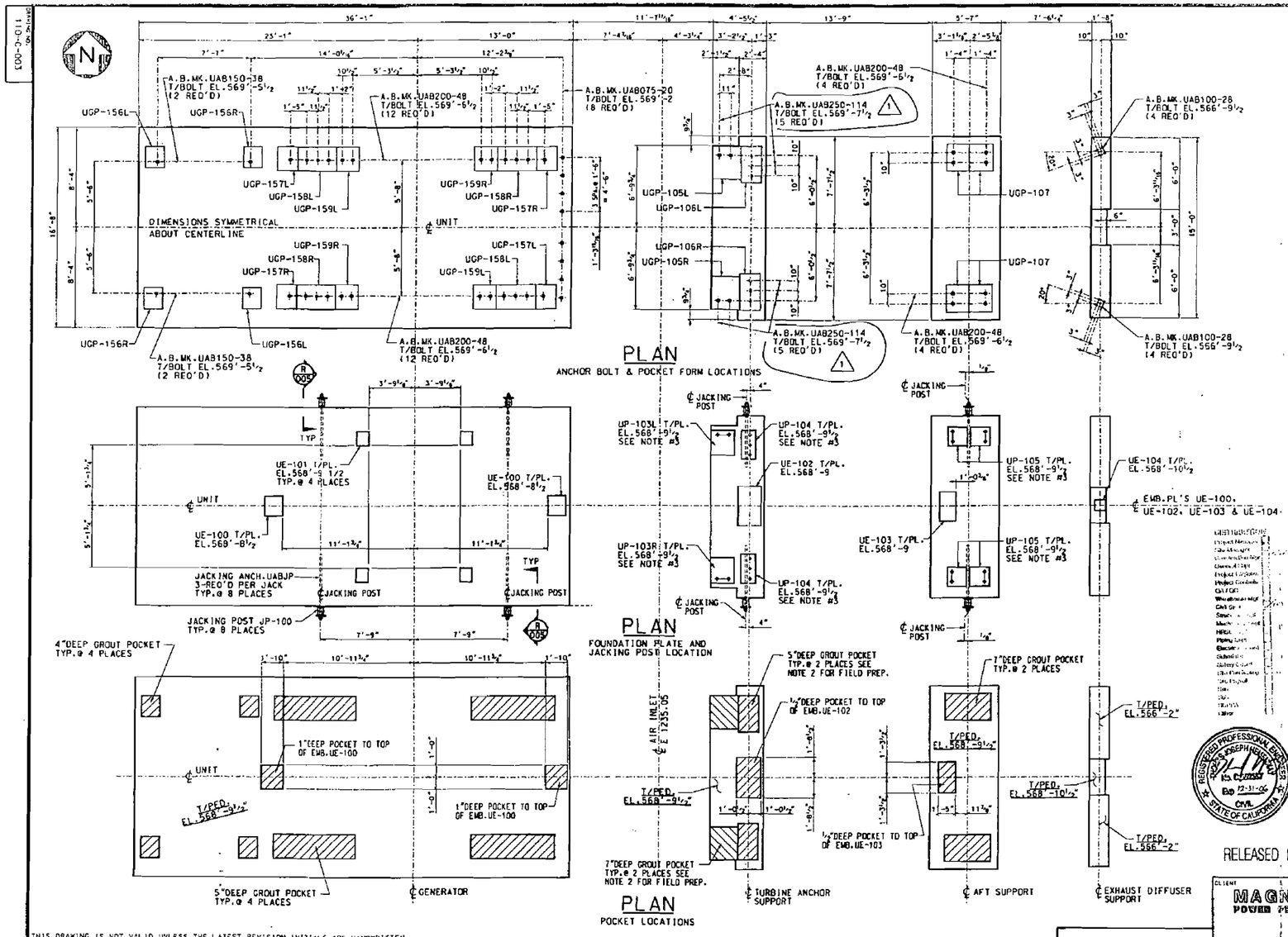

NOTES

1. FOR GENERAL NOTES SEE DWG. 110-C-001.
2. GROUT POCKETS NOTED ON TURBINE ANCHOR SUPPORT FDN., TO BE BUSH-HAMMERED (CUT) ONE ADDITIONAL INCH AFTER CONCRETE FDN. IS POURED. I.E. THE 7"DEEP POCKET WILL BECOME 8" DEEP AND THE 5"DEEP POCKET WILL BECOME 6"DEEP.
3. POSTPOUR UNISORB PLATES UP-103, UP-104, & UP-105 TO BE SET WITH UNISORB FIXATORS AS PER REQUIREMENTS OF THE UNISORB FIELD REPRESENTATIVE AND GE DWG. 355A8942
4. THE FINAL INSTALLED LOCATION OF POST-POUR PLATE UP-106 SHALL COMPLY WITH THE FOLLOWING:

   THE FINAL INSTALLED ELEVATION OF THE SURFACE OF THE FOUNDATION PLATES SHALL BE WITHIN ±1/8" OF THE SPECIFIED ELEVATION.

   THE TOP SURFACES OF THE FOUNDATION PLATES FOR EACH PIECE OF EQUIPMENT SHALL BE COPLANER WITHIN 1/8" TOTAL IN THE FINAL INSTALLED LOCATION.

   THE FOUNDATION PLATES SHALL BE SET LEVEL WITHIN 2 MILS PER FOOT PRIOR TO GROUTING. AFTER GROUT HAS CURED, PLATES SHALL BE LEVEL WITHIN 10 MILS PER FOOT
5. LOCATION OF ANCHOR BOLTS, AT THE TOP OF CONCRETE AND TOP OF BOLT, SHALL BE SET TO A TOLERANCE OF 1/8" FROM THAT SHOWN ON FOUNDATION DRAWINGS. VERTICAL AND HORIZONTAL ANCHOR BOLTS SHALL BE KEPT PLUMB & LEVEL WITHIN A TOLERANCE 3".
6. ELEVATIONS OF TOPS OF VERTICAL ANCHOR BOLTS AND PROJECTIONS OF HORIZONTAL ANCHOR BOLTS SHALL BE HELD WITHIN A TOLERANCE OF PLUS OR MINUS 1/4" FROM THAT SHOWN ON DRAWINGS.
7. FINAL INSTALLED ELEVATION OF EMBED'S SHALL BE WITHIN 1/8" OF SPECIFIED ELEVATION, AND WITHIN 1/4" OF SPECIFIED PLAN LOCATION. EMBED'S SHALL BE LEVEL WITHIN 1/8" PER FOOT AND 1/4" TOTAL IN FINAL INSTALLED POSITION.
8. ALL ANCHOR BOLTS (UAB), EMBEDED PLATES (UE), GROUT POCKET FORMS (UGP), JACKING POSTS (JP) AND POSTPOUR PLATES (UP) NOTED ON THIS DRAWING & DWG. 110-C-001 ARE SUPPLIED BY "UNISORB INSTALLATION TECHNOLOGIES". FOR ANCHOR BOLTS (UAB) SEE UNISORB DRAWING 20680-SHEET 4

MAGNOLIA POWER PLANT
LP'A - ON BEHALF OF
CALIF. ENERGY COMMISSION
APPROVED
9-25-03
FRANK J. UHRAKE, CHIEF BUILDING OFFICIAL DATE

REFERENCE DWG'S

GE DRAWINGS

FOUNDATION INTERFACE GAS TURBINE PACKAGE 207D5185 - SHEETS 1 THRU 5

UNISORB DRAWINGS

GAS TURBINE GENERATOR PREPOUR AND POSTPOUR INFORMATION, KIT U-MS7FA/7FH2-FD 20680 - SHEETS 1 THRU 8

REGISTERED PROFESSIONAL ENGINEER JOSEPH KERN No. C-20037 Exp 12-31-04 CIVIL STATE OF CALIFORNIA

RECEIVED
OCT 01 2003
KVAERNER BOHGEN, INC. FIELD OFFICE

RELEASED FOR CONSTRUCTION

THIS DRAWING IS NOT VALID UNLESS THE LATEST REVISION INITIALS ARE HANDWRITTEN

REVISIONS NO	DESCRIPTION	BY	CH	APPROVED	DATE

REVISIONS NO	DESCRIPTION	BY	CH	APPROVED	DATE
1	REVISED BOLT MK. & REFERENCE	FB	JSS	[illegible]	9-25-03
0	ISSUED FOR CONSTRUCTION	AKR	JSS	TH/BR	DEC 8/14/03
B	REMOVED HOLD	RLS	JSS		
A	ISSUED FOR APPROVAL	FAB	JSS		

REFERENCES

			DATE TO	A	B	C
DESIGNED	M.PATEL					
DRAWN	F.BOONAR	28MAY03	CLIENT			
CHECKED	J.STACK	10JUN03	FIELD			
APPROVED 1	TH/BR	14AUG03	CBO	6/15		
APPROVED 2	DJA	14AUG03				
CLIENT APP'L						

0	1	2	3	4	5	6	7
	123						
	1|5|966						

CLIENT: MAGNOLIA POWER PROJECT

AKER KVÆRNER™ E&C Division
San Francisco, California

TITLE: GAS TURBINE & GENERATOR FDN. - ANCHOR BOLT & FDN. PLATE LOCATIONS - PLAN

SCALE 1/4"=1'-0" | PROJ. NO. 800400 | DRAWING NO. 110-C-003 | REVISION 1

1 JSS 17SEP03 0 JSS 05AUG03 B JSS 3JUL03 A JSS 19JUN03

110-C-004

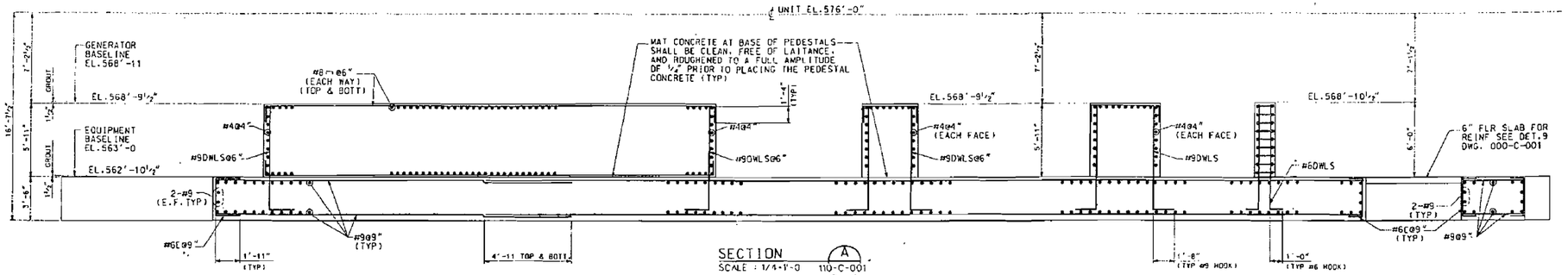

SECTION A
SCALE : 1/4"=1'-0 110-C-001

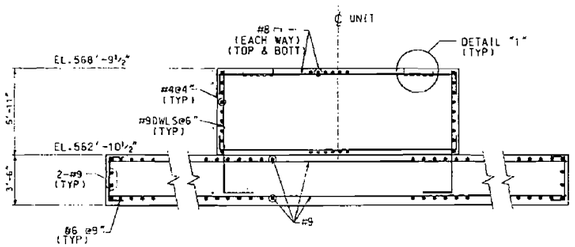

SECTION B
SCALE : 1/4"=1'-0 110-C-001

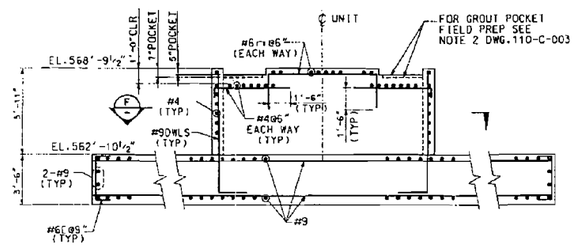

SECTION C
SCALE : 1/4"=1'-0 110-C-001

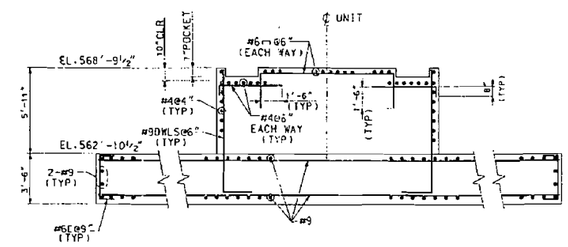

SECTION D
SCALE : 1/4"=1'-0 110-C-001

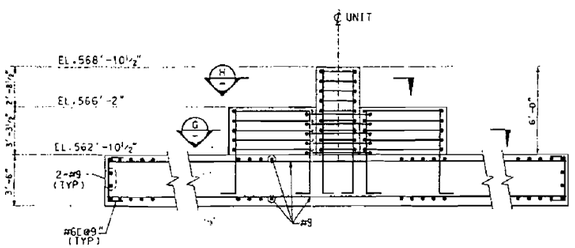

SECTION E
SCALE : 1/4"=1'-0 110-C-001

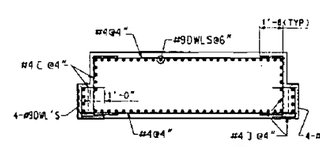

SECTION F
SCALE : 1/4"=1'-0 THIS DWG

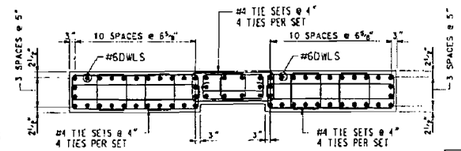

SECTION G
SCALE : 3/8"=1'-0 THIS DWG

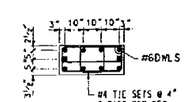

SECTION H
SCALE : 3/8"=1'-0 THIS DWG

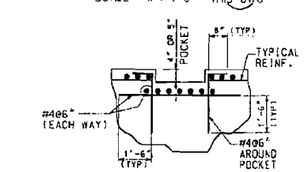

DETAIL 1
SCALE : 3/8"=1'-0" THIS DWG
(FOR POCKET LOCATIONS SEE DWG.110-C-003)

DISTRIBUTION
Project Manager
Site Manager
Construction Manager
Chief Engineer
Project Engineer
Project Controls
QA FOC
Warehouse Mgr
Civil Supt
Structural Supt
Mechanical Supt
HRSG Supt
Piping Supt
Electrical Const
Subcontractor
Safety Const
Site Purchasing
Con Trade
Sub
Sub
SCPPA
Other

NOTES

1. FOR GENERAL NOTES SEE DWG.110-C-001
2. WORK THIS DRAWING WITH DRAWINGS 110-C-001, 002 & 003.

RECEIVED
OCT 01 2003
KVAERNER WORLEY, INC. FIELD OFFICE

MAGNOLIA POWER PLANT
LPA - ON BEHALF OF
CALIF. ENERGY COMMISSION
APPROVED
FRANK J. LIMBART, CHIEF BUILDING OFFICIAL — DATE 9.25.03

REGISTERED PROFESSIONAL ENGINEER JAMES JOSEPH HERNANDEZ No. C052357 Exp. 6-30-06 CIVIL STATE OF CALIFORNIA

RECEIVED
AUG 18 2003
REGISTERED PROFESSIONAL ENGINEER JAMES S. STACK No. M 28749 Exp. 12-31-03 MECHANICAL STATE OF CALIFORNIA

RELEASED FOR CONSTRUCTION

13 NOV 03
EXP. 30 SEP 05

THIS DRAWING IS NOT VALID UNLESS THE LATEST REVISION INITIALS ARE HANDWRITTEN

REVISIONS NO.	DESCRIPTION	BY	CH	APPROVED	DATE

REVISIONS NO.	DESCRIPTION	BY	CH	APPROVED	DATE
A	ISSUED FOR CONSTRUCTION	AAR	JSS		
B	DEL.NOTE 3. ADD. BAR HOOKS – SPLICES TO DWG.	MLS	JSS		
C	ADDED TENSION LAP SPLICE NOTE #3	FAB	JSS		
D	ISSUED FOR APPROVAL	FAB	JSS		

INTERFACES

DESIGNED	M.PATEL	
DRAWN	R.L. STROW	02JUN03
CHECKED	Y. BODNAR	10JUN03
APPROVED 1		
APPROVED 2		
CLIENT		

DATE TO	A	B	C	D	1	2	3	4	5	6	7
CLIENT											
FIELD				FILO							
C&C				9/15							

TITLE
GAS TURBINE & GENERATOR FOUNDATIONS SECTIONS & DETAILS

CLIENT
MAGNOLIA POWER PROJECT

AKER KVÆRNER™
E&C Division
San Francisco, California

SCALE 1/4"=1'-0 | PROJ. NO. 800400 | REVISION

DRAWING NO.
110-C-004

REVISION 0

CON_INTR-BD
Rev. 24-OCT-2002

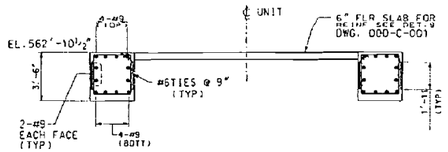

SECTION K
SCALE : 1/4=1'-0 110-C-001

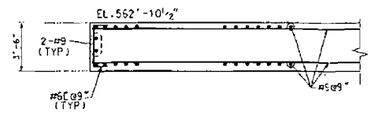

SECTION M
SCALE : 1/4=1'-0 110-C-001

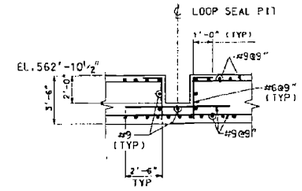

SECTION N
SCALE : 1/4=1'-0 110-C-001

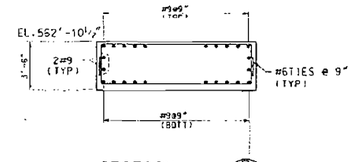

SECTION P
SCALE : 1/4=1'-0 110-C-001
TYPICAL @ 2 PLACES

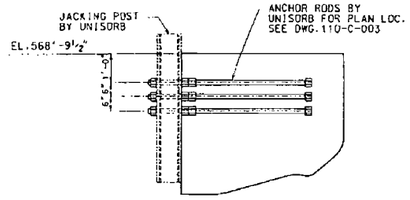

SECTION R
SCALE : 1/2=1'-0 110-C-003
TYPICAL @ 8 PLACES

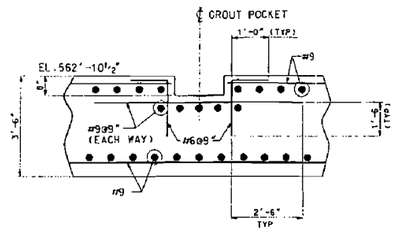

SECTION S
SCALE : 1/2=1'-0 110-C-001
TYPICAL @ 6 PLACES

DISTRIBUTION

RECEIVED
OCT 0 1 2003
KVAERNER ENGINEER, INC. FIELD OFFICE

NOTES

1. FOR GENERAL NOTES SEE DWG. 110-C-001
2. WORK THIS DRAWING WITH DRAWINGS 110-C-001, 002 & 003.

RECEIVED
OCT 1 A 2003
MAGNOLIA POWER

MAGNOLIA POWER PLANT
LP²A - ON BEHALF OF CALIF. ENERGY COMMISSION
APPROVED
2-25-03
FRANK J. UHMAR, CBO OF BUILDING OFFICIAL DATE

REGISTERED PROFESSIONAL ENGINEER THOMAS JOSEPH HENDRICKS No. C 062357 Exp. 12-31-06 CIVIL STATE OF CALIFORNIA

REGISTERED PROFESSIONAL ENGINEER JAMES S. STACK ENGINEER 28749-E

13 Aug 03
Exp. 30 Sept 03

RELEASED FOR CONSTRUCTION

THIS DRAWING IS NOT VALID UNLESS THE LATEST REVISION INITIALS ARE HANDWRITTEN

REVISIONS NO	DESCRIPTION	BY	CK	APPROVED	DATE
0	ISSUED FOR CONSTRUCTION	AAR	JSS		
A	ADDED BAR HOOK & SPLICES DIM. TO DWG.	WLS	JSS		
B	ADD SECT. "S". REV. BAR SIZE & SPA.	FAB	JSS		
C	ISSUED FOR APPROVAL	FAB	JSS		

REFERENCES

DESIGNED	M.PATEL		DATE TO
DRAWN	R.L. STROM	04JUN03	CLIENT
CHECKED	J. BODNAR	10JUN03	FIELD
APPROVED 1			
APPROVED 2			
CLIENT APP'L			

A B C 0 1 2 3 4 5 6 7

CLIENT MAGNOLIA POWER PROJECT

AKER KVÆRNER™ E&C Division
San Francisco, California

TITLE GAS TURBINE & GENERATOR FOUNDATIONS SECTIONS

SCALE 1/4"=1'-0 PROJ. NO. 800400 REVISION

DRAWING NO. 110-C-005 0

0 JSS 05AUG03 C JSS 3JUL03 B JSS 25JUN03 A JSS 19JUN03

110-C-005

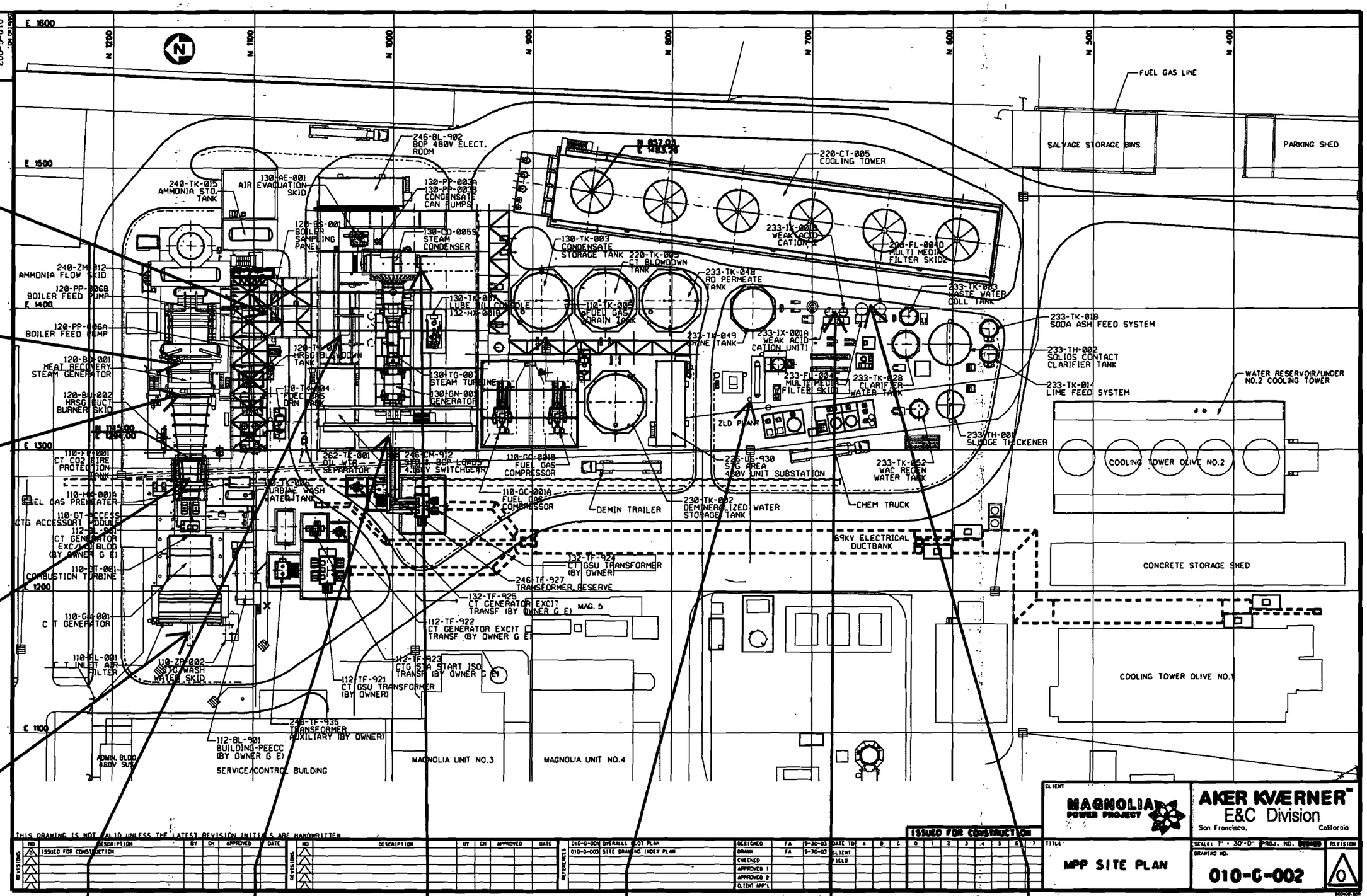

...\Plot Plan\010g002 ASBLT.dgn 12/21/2007 11:10:19 AM

BLACK & VEATCH

Owner BWP
Plant MAGNOLIA Unit
Project No. File No.
Title ZLD ACCESS PLATFORM
STAIR LANDING COVER PAD'S

Computed By KASHWA
Date 20
Verified By
Date 20
Page 1 of 2

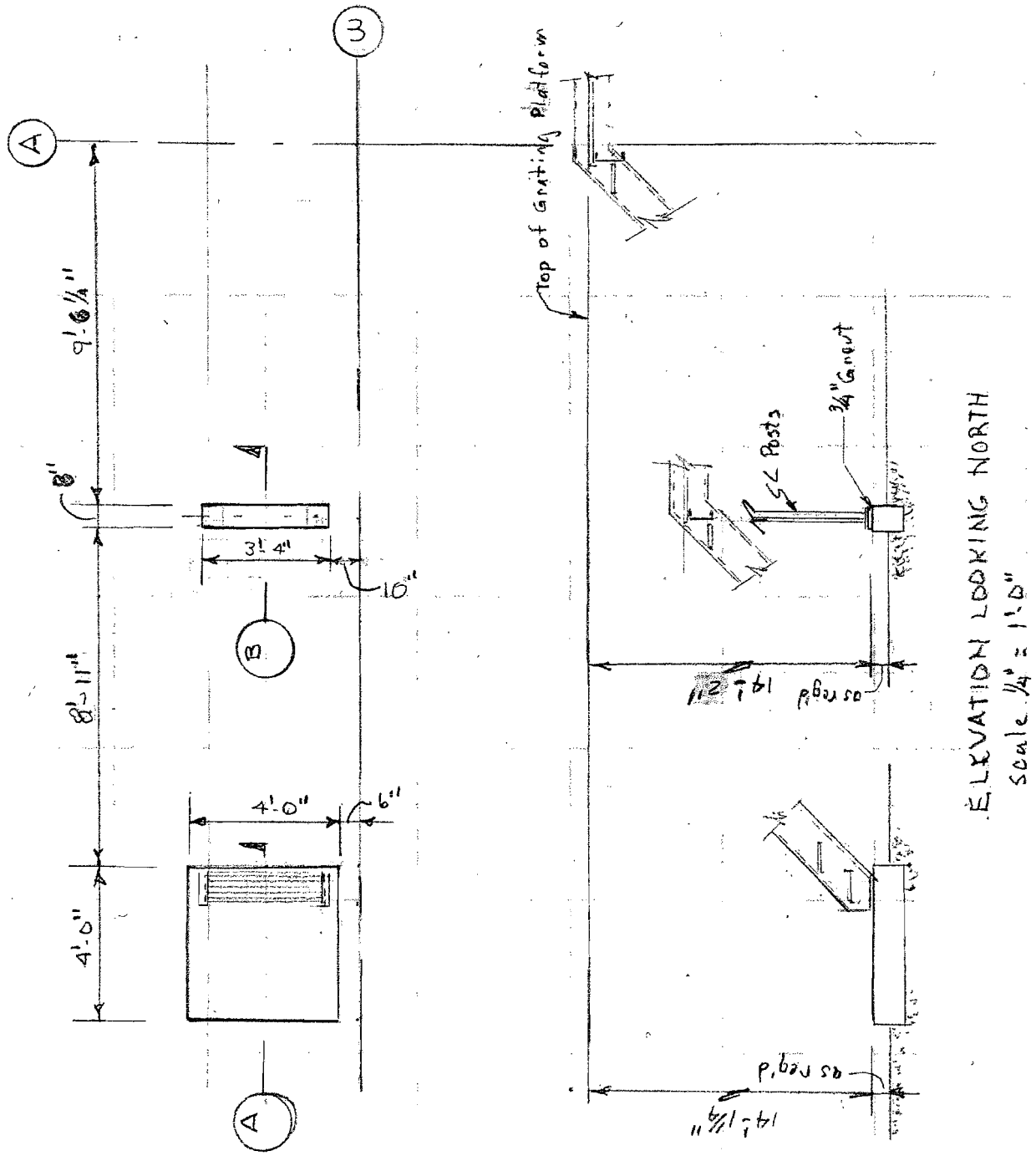

PLAN
Scale 1/4" = 1'-0"

ELEVATION LOOKING NORTH
Scale 1/4" = 1'-0"

DO NOT WRITE IN THIS SPACE

PGN-173B

REVISED, SUPERSEDED, AND VOID CALCULATIONS MUST BE CLEARLY IDENTIFIED, INITIALED, AND DATED BY THE RESPONSIBLE INDIVIDUAL.

BLACK & VEATCH

Owner BWP | Computed By KASHKA
Plant MAGNOLIA | Unit | Date | 20
Project No. 145348 | File No. | Verified By
Title ZLD Access Platform | Date | 20
Stair Landing Conc. Pads | Page 2 of 2

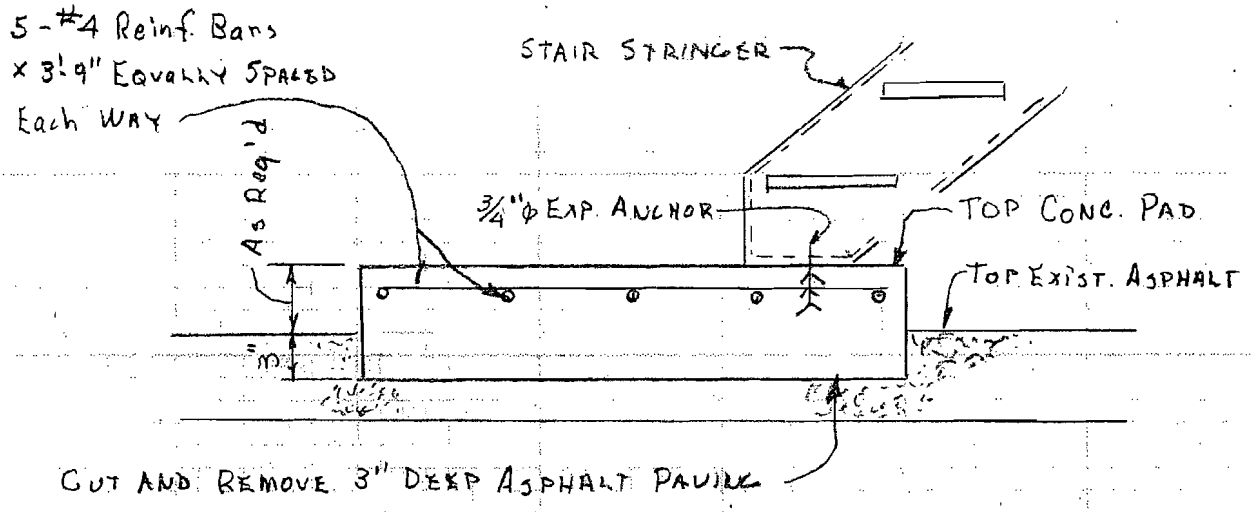

DETAIL "A"
Scale 3/4" = 1'-0"

NOTE: If pad is greater than 8" thick add second layer of #4 Reinf 2" above bottom of pad.

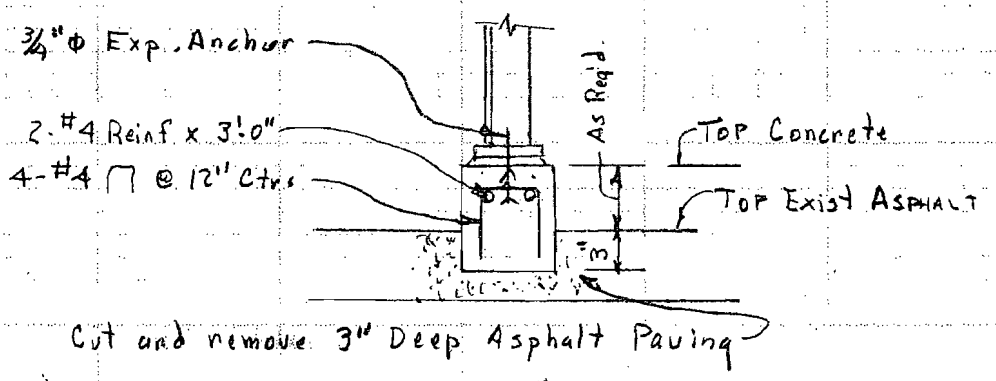

DETAIL "B"
Scale 3/4" = 1'-0"

DO NOT WRITE IN THIS SPACE

PGN-173B

REVISED, SUPERSEDED, AND VOID CALCULATIONS MUST BE CLEARLY IDENTIFIED, INITIALED, AND DATED BY THE RESPONSIBLE INDIVIDUAL.

BLACK & VEATCH

Owner BWP
Plant MAGNOLIA Unit
Project No. 145348 File No.
Title C.T.G. Stair Landings Concrete Pads

Computed By KASHKA
Date 20
Verified By
Date 20
Page 1 of 2

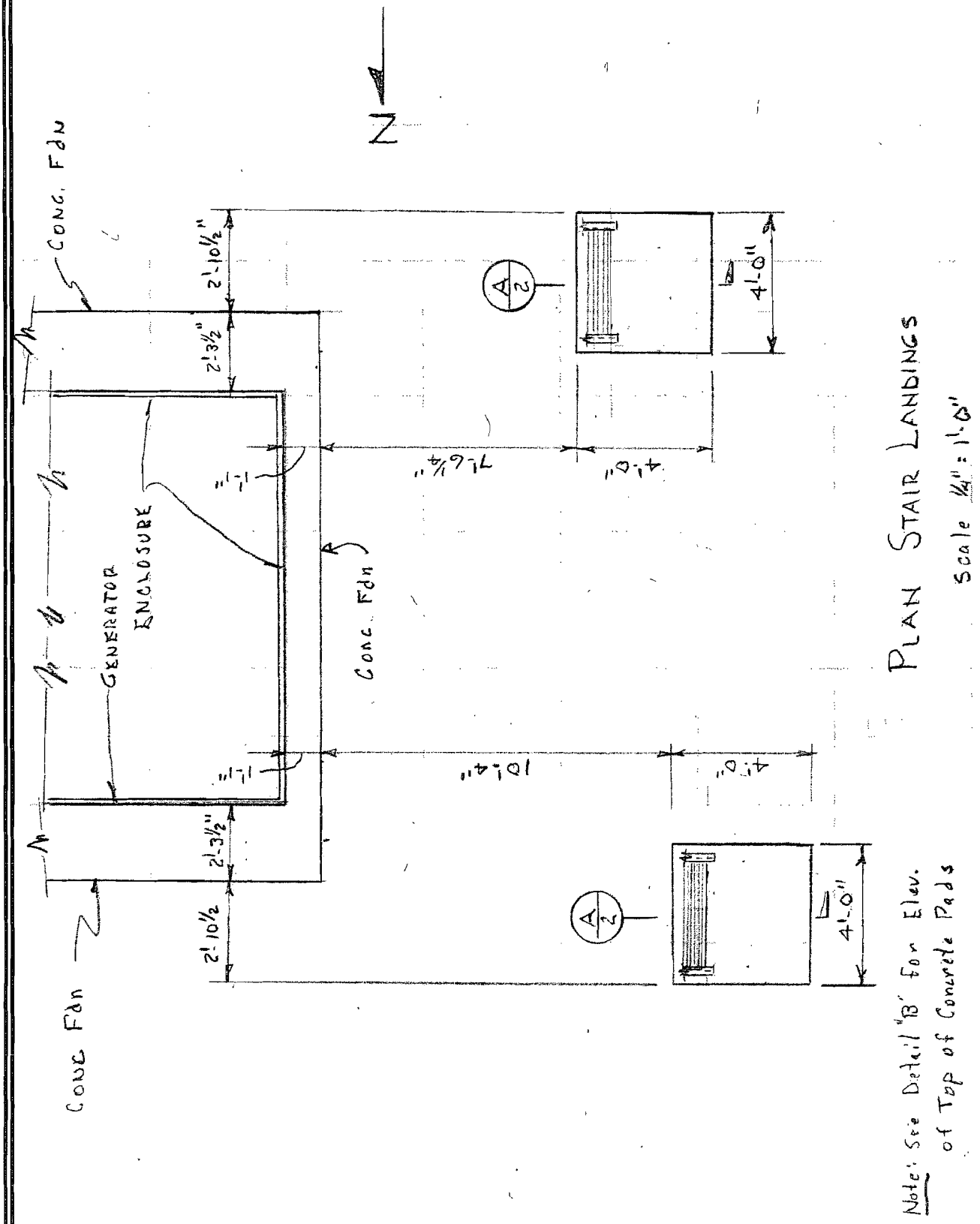

PLAN STAIR LANDINGS
Scale ¼" = 1'-0"

Note: See Detail "B" for Elev. of Top of Concrete Pads

DO NOT WRITE IN THIS SPACE

PGN-173B

REVISED, SUPERSEDED, AND VOID CALCULATIONS MUST BE CLEARLY IDENTIFIED, INITIALED, AND DATED BY THE RESPONSIBLE INDIVIDUAL.

BLACK & VEATCH

Owner BWP | Computed By Kashka
Plant Magnolia | Unit | Date | 20
Project No. 145348 | File No. | Verified By
Title C.T.G. Stair Landings Sections | Date | 20
Page 2 of 2

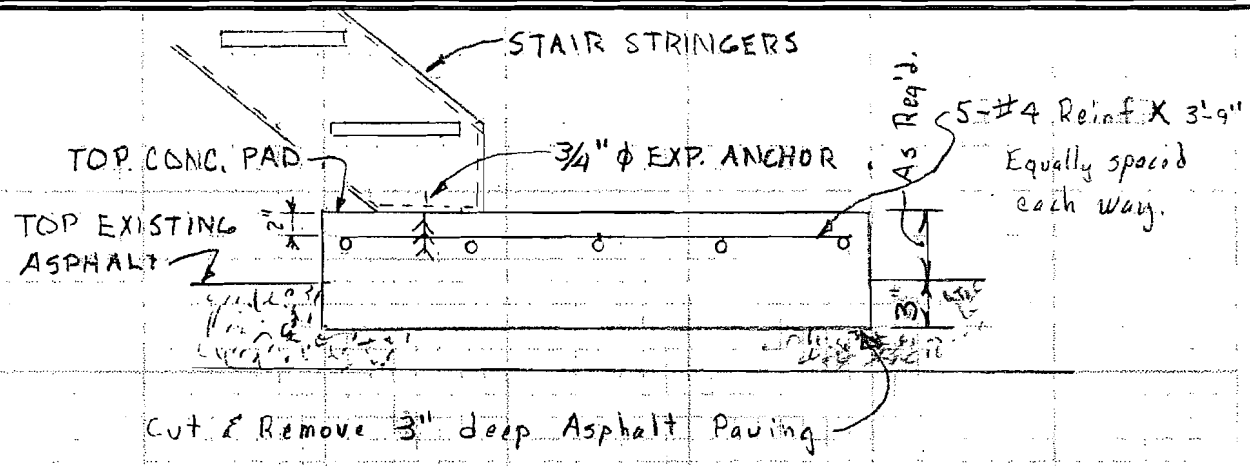

DETAIL "A"
Scale 3/4" = 1'-0"

Note: If pad is greater than 8" thick add second layer of #4 Reinf 2" above bottom of pad.

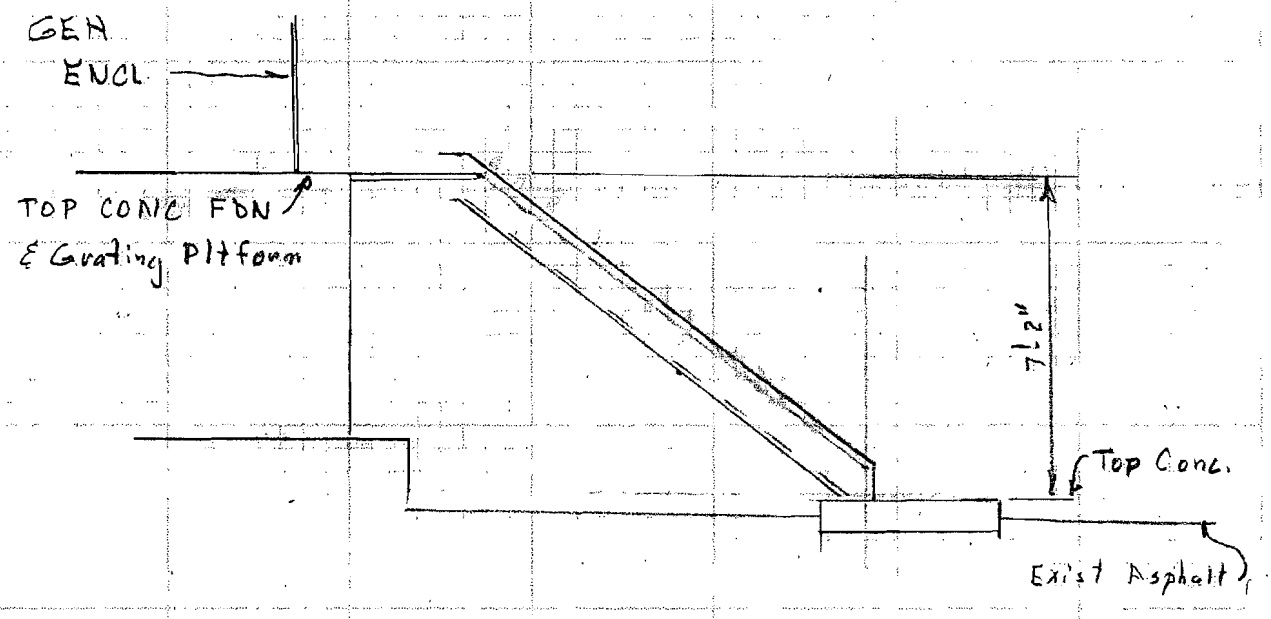

DETAL B
Scale 1/4" = 1'-0"

DO NOT WRITE IN THIS SPACE

PGN-173B

REVISED, SUPERSEDED, AND VOID CALCULATIONS MUST BE CLEARLY IDENTIFIED, INITIALED, AND DATED BY THE RESPONSIBLE INDIVIDUAL.

BLACK & VEATCH

Owner BURBANK POWER & WATER | Computed By AAK
Plant MAGNOLIA PLANT | Unit | Date JAN 12 2008
Project No. 145348 | File No. | Verified By
Title ACCESS PLATFORMS | Date 20
STUB TO TRUNION WELD ADEQUACY | Page 1 of 3

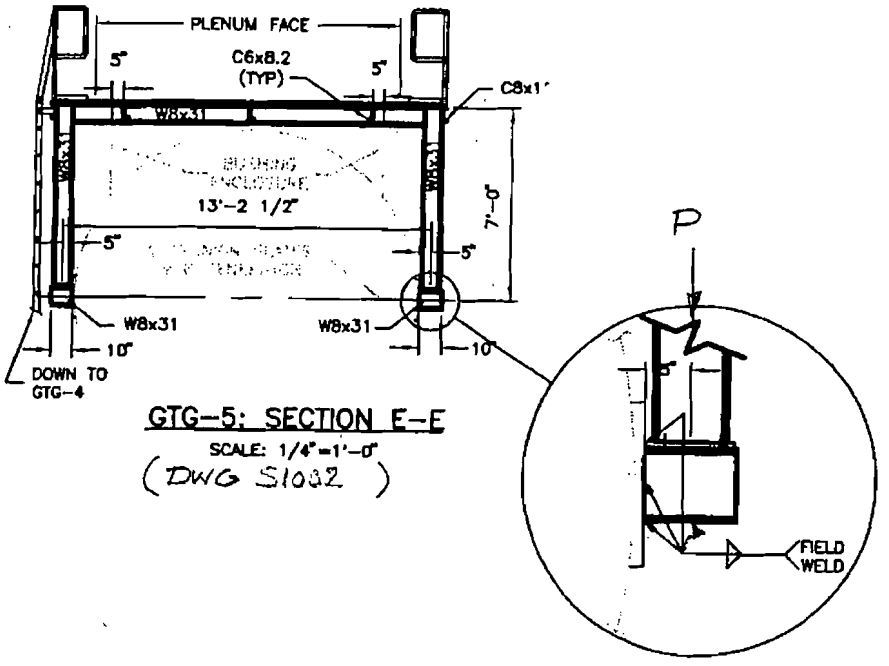

GTG-5: SECTION E-E
SCALE: 1/4"=1'-0"
(DWG S1032)

DETERMINE ADEQUACY OF WELD CONNECTION OF THE W8X31 "STUB" TO THE TRUNION

ASSUMPTIONS

- WELD ELECTRODES: E70 [DWG S1000]
- FILLET WELD SIZE: 3/16 MIN. (1/4 DWG S1000)
- WELD PATTERN AS FOLLOWS:

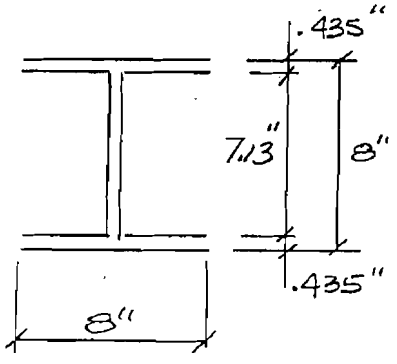

DO NOT WRITE IN THIS SPACE

PGN-173B

REVISED, SUPERSEDED, AND VOID CALCULATIONS MUST BE CLEARLY IDENTIFIED, INITIALED, AND DATED BY THE RESPONSIBLE INDIVIDUAL

• LOADING: PLATFORM FRAMING IS LATERALLY BRACED TRANSVERSLY AND LONGITUDINALLY.

WELD STRESS RESULTS FROM A COMBINATION OF SHEAR & BENDING MOMENT.

DETERMINE MOMENT OF INERTIA OF WELD PATTERN

$$I_1 = \frac{8[3(8)^2+(8)^2]}{6} = 341.34 \text{ IN}^2$$

$$I_2 = \frac{(8)^3+3(8)^2+(8)^3}{6} = 202.67$$

$$\therefore I\,(\text{COMBINED}) = I_1 + I_2 = \boxed{544 \text{ IN}^4}$$

DETERMINE WELD AREA

$$A_1 = 2 \times 8 = 16$$

$$A_2 = 2 \times [8 - 2(.435)] + 2 \times 16 = 30.26$$

$$\therefore A = A_1 + A_2 = \boxed{46.26}$$

DETERMINE ALLOWABLE WELD STRESS

MIN. FILLET WELD SIZE = .1875 = a

EFFECTIVE WELD THROAT = .707 × a = 0.132"

COMBINED ALLOWABLE STRESS (f_r)

$$f_r = 21 \text{ ksi} \times .132 = \boxed{2.77 \text{ ksi}}$$

DO NOT WRITE IN THIS SPACE

PGN-173B

REVISED, SUPERSEDED, AND VOID CALCULATIONS MUST BE CLEARLY IDENTIFIED, INITIALED, AND DATED BY THE RESPONSIBLE INDIVIDUAL

DETERMINE ALLOWABLE VERTICAL LOAD SUPPORTED BY WELDED CONNECTION

P_a = ALLOWABLE LOAD

SHEAR $V = P$

BENDING MOMENT $M = 5'' \times P$

STRESS DETERMINATION

SHEAR $f' = \frac{P}{A} = \frac{P}{46.26} = 0.0216P$

BENDING $f'' = \frac{Mc}{I} = \frac{5(P)4}{544} = 0.03676P$

COMBINED STRESS

$$f_r = \sqrt{(f')^2 + (f'')^2} = 2.77 \text{ ksi}$$

$$= \sqrt{(.0216P)^2 + (.03676P)^2} = 2.77$$

$$= \sqrt{.000466P^2 + .00135P^2} = 2.77$$

$$= \sqrt{.001817P^2} = 2.77$$

$$f_r = .0426P = 2.77$$

$$\boxed{P = 64.9^K = \text{ALLOWABLE VERTICAL LOAD/COLUMN}}$$

DETERMINE APPROX. ACTUAL LOAD

PLATFORM AREA $\approx (2 + 1.75) \times 14' = 53$ SF

APPROX. LOAD TO EACH COLUMN $\approx (\underset{LL}{.100 \text{ PSF}} + \underset{DL}{.020 \text{ PSF}}) \times 53 \times .5$

$\approx 3.18^K \lll 64.9^K$

SUMMARY

CAPACITY OF WELDED CONNECTION OF W8x31 "STUB" TO TRUNION IS MAGNITUDES MORE THAN ADEQUATE

DO NOT WRITE IN THIS SPACE

PGN—173B

REVISED, SUPERSEDED, AND VOID CALCULATIONS MUST BE CLEARLY IDENTIFIED, INITIALED, AND DATED BY THE RESPONSIBLE INDIVIDUAL

BLACK & VEATCH

Owner BURBANK POWER & WATER Computed By AAK
Plant MAGNOLIA PLANT Unit Date JAN 12, 2008
Project No. 145348 File No. Verified By
Title ACCESS PLATFORM Date 20
ANGLE & GUSSET & SUPPORT ADEQUACY Page 1 of 2

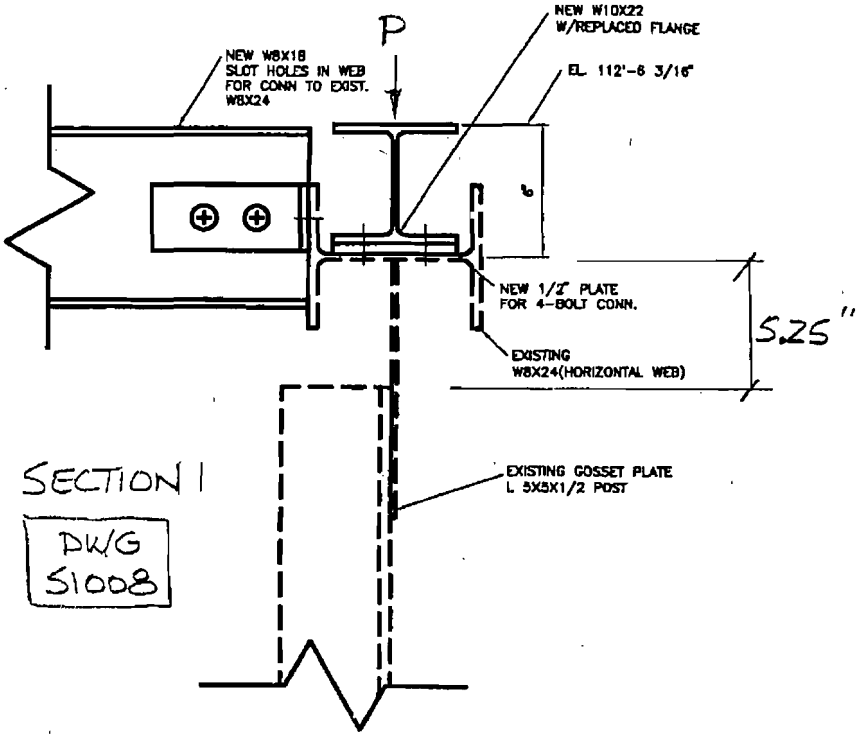

SECTION 1

DWG S1008

DETERMINE THE ADEQUACY OF L5X5X1/2 ANGLE AND GUSSET PLATE TO SUPPORT ADDED PLATFORM LOADING

ASSUMPTIONS

GUSSET MATERIAL: A36
ANGLE MATERIAL: A36
LOADING: ONE CORNER OF ACCESS PLATFORM LOAD ADDED TO L5X5

$$= \frac{13.25'}{2} \times \frac{3}{2} \times (\underset{LL}{.100} + \underset{DL}{.20}) = 1.19^k$$

DETERMINE LOAD CARRYING CAPACITY OF THE L5X5X1/2 ANGLE

$$L = \frac{13.25}{1 + 13.25} \times 4.17 = 2.28'$$

$$K = 1.0$$

DO NOT WRITE IN THIS SPACE

PGN-173B

REVISED, SUPERSEDED, AND VOID CALCULATIONS MUST BE CLEARLY IDENTIFIED, INITIALED, AND DATED BY THE RESPONSIBLE INDIVIDUAL

$r_z = .985$

$\frac{KL}{r_z} = \frac{2.78 \times 12}{.983} = 33.93 \therefore F_a = 19.65 \text{ ksi}$

$A_{(L5\times5\times1/2)} = 4.75 \text{ IN}^2$

$\boxed{P_a = 4.75 \times 19.65 = 93^k >>> 1.19^k}$

$\frac{P_{actual}}{P_{allow}} = \frac{1.19}{93} = .0128$ 1.3% ADDED TO L5x5x1/2 CAPACITY

DETERMINE ADEQUACY OF GUSSET PLATE

ASSUME: - 3/8" PLATE THICKNESS
- A36
- EFFECTIVE WIDTH OF PLATE 5"

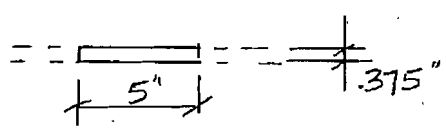

$I = \frac{5(.375)^3}{12} = .02197$

$A = 5 \times .375 = 1.875$

$r_x = \sqrt{\frac{I}{A}} = 0.108 \text{ IN}$

$\frac{KL}{r} = \frac{1 \times 5.25}{.108} = 48 \therefore F_a = 18.53 \text{ ksi}$

$\boxed{P_a = 1.875 \times 18.53 = 35^k >> P_{ACTUAL\ ADDED} = 1.19^k}$

$\frac{P_{actual}}{P_{allow}} = 0.034$ 3.4% ADDED TO GUSSET PLATE CAPACITY

DO NOT WRITE IN THIS SPACE

PGN-173B

Sheet no. S1011

SECTIONS 3 & 13 – COMMENT: Verify adequacy of kick plate to span 5'-0".

There is no kick plate provided for sections 3 & 13; grating is connected to the channel 4" below TOS, and those top 4" of the channel serve as kick plate.

Looking at the remaining sections that do have kick plate provided:

– consider 5'-0" span w/ fixed ends, with lateral force producing weak axis bending

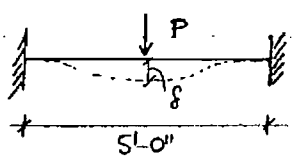

Plan

OSHA standard no. 1910.23 (e)(4) advises that the maximum opening in the kick plate shall not be over 1"

$\Rightarrow P = ?$ @ $\Delta_{max} = 1"$

$$\Delta_{max} = \frac{Pl^3}{192EI} \Rightarrow P_{max} = \frac{\Delta_{max} \cdot 192EI}{l^3} = \frac{1\,in \times 192 \times 29{,}000\,\frac{kip}{in^2} \times (\frac{1}{12} \times 4 \times 1/4^3)\,in^4}{60^3\,in^3}$$

$$P_{max} = 0.134\ kip$$

$$M_{max} = \frac{P_{max} \cdot l}{8} = \frac{0.134\,kip \cdot 60\,in}{8} = 1.0\ kip\text{-}in$$

$$\sigma = \frac{M_{max}}{S} = \frac{1.0\ kip\text{-}in}{\frac{4 \cdot 1/4^2}{6}\,in^3} = 24.17\ ksi < \sigma_y$$

$\Rightarrow$ It would take 134 lb concentrated force at the kick plate midspan to produce a maximum allowable deflection of 1".
If there is a reasonable concern by the client that forces larger than 134 lb will act on the kick plate, the span can be reduced by adding a midspan kick plate support.

DO NOT WRITE IN THIS SPACE

PGN-173B

REVISED, SUPERSEDED, AND VOID CALCULATIONS MUST BE CLEARLY IDENTIFIED, INITIALED, AND DATED BY THE RESPONSIBLE INDIVIDUAL.

Sheet no. S1011

SECTIONS 3 & 13 – COMMENT: check C10x for bending of top flange and web for guardrail load.

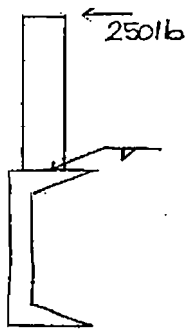

critical design load: 50 plf x 5 ft = 250 lb
OR
200 lb

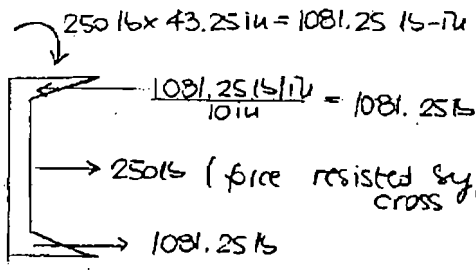

Weak axis bending

assume max. span of C10x = 9'-0"

$$M = \frac{250\,lb \cdot 9\,ft \cdot 12\,in/ft}{8} = 3375\ lb\text{-}in$$

$$S_y = 1.16\ in^3$$

$$\sigma = \frac{M}{S_y} = \frac{3375\,lb\text{-}in}{1.16\,in^3 \cdot 2} = 2.9\,ksi < 0.75F_y = 27\,ksi \checkmark$$

torsion

$$\tau = \frac{1081.25\,lb}{2.00\,in \times 0.436\,in} = 0.95\,ksi < 0.4F_y = 14.4\,ksi \checkmark$$

$$M = \frac{1081.25\,lb \cdot 9\,ft}{8} = 1.22\ kip\text{-}ft$$

$$\sigma = \frac{M}{S_y} = \frac{1.22\,kip\text{-}ft \cdot 12\,in/ft}{0.5 \cdot 1.16\,in^3} = 25.2\,ksi < 0.75F_y = 27\,ksi \checkmark$$

top half of the section contributing

REVISED, SUPERSEDED, AND VOID CALCULATIONS MUST BE CLEARLY IDENTIFIED, INITIALED, AND DATED BY THE RESPONSIBLE INDIVIDUAL.

DO NOT WRITE IN THIS SPACE

PGN-173B

BLACK & VEATCH

Owner Burbank Power & Water | Computed By MM
Plant Magnolia | Unit | Date 01/16 20 08
Project No. 145348 | File No. | Verified By SHS
Title Access Platforms | Date 01/17 20 08
Comments on 51011 | Page 3 of 3

Sheet no. 51011

SECTIONS 3 & 13 – Comment: The angle carrying the grating may need to be added also when parallel to the grating span to provide stability

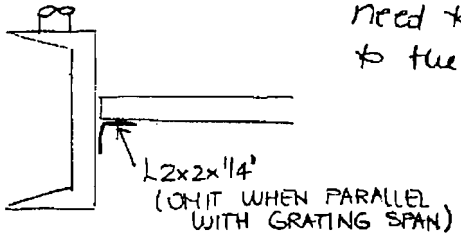

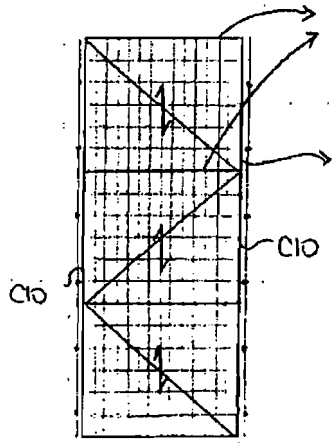

beams carrying the grating load

C10 → non-load carrying element with respect to grating load

⇒ no benefit from adding L shape to support grating,

Overall stability is provided by H-brace elements forming a horizontal truss

– even if L shape was added & grating clamped to it, cross bars would not be engaged and therefore, there is no possibility of creating 2 way system

DO NOT WRITE IN THIS SPACE

PGN–173B

REVISED, SUPERSEDED, AND VOID CALCULATIONS MUST BE CLEARLY IDENTIFIED, INITIALED, AND DATED BY THE RESPONSIBLE INDIVIDUAL.

BLACK & VEATCH

Owner: Burbank Power & Water | Computed By: HM
Plant: Magnolia | Unit: | Date: 01/16 2008
Project No. 145348 | File No. | Verified By: SMS
Title: Access Platforms | Date: 01/17 2008
Comments on S1012 | Page 1 of 1

Sheet no. S1012

DETAIL 17 – Comment: 3/4φ bolt is maximum for C10x

Response: AISC manual lists maximum flange fastener diameter for C10x to be 3/4"φ. We understand this limitation is due to standard socket size and tightening clearance considerations, therefore 7/8"φ bolts could be used in C10x flanges relying on the fact that tightening may be done by turning the bolt while the nut is prevented from rotating, i.e. using the beveled washer on the underside of the flange and tightening the upper nut or bolt only. With AISC required minimum edge distance, the "c" dimension of a 7/8"φ heavy hex nut will clear the inside face of the channel web.

DO NOT WRITE IN THIS SPACE

PGN-173B

REVISED, SUPERSEDED, AND VOID CALCULATIONS MUST BE CLEARLY IDENTIFIED, INITIALED, AND DATED BY THE RESPONSIBLE INDIVIDUAL.