NOV 09 2006

California ISO
Your Link to Power

California Independent System Operator

Gary DeShazo
Director of Regional Transmission – North
(916) 608-5880

November 7, 2006

DOCKET
01-AFC-7C
DATE NOV 07 2006
RECD. FEB 13 2007

Mr. Chris Gillis
Generator Interconnection Services
Pacific Gas and Electric Company
PO Box 770000; Mail Code: N7L
San Francisco, CA 94177-0001

Subject: Russell City Energy Center Project
Final Interconnection Approval

Dear Mr. Gillis:

Calpine Corporation (Calpine) has proposed the Russell City Energy Center Project and the Russell City Energy Center Expansion Project (collectively called the Project), a combined cycle plant consisting of two combustion gas turbines and one steam turbine generator. The nominal net output to the Pacific Gas & Electric Company (PG&E) Transmission grid will be 600 MW. The commercial operational date is June 1, 2010.

Previously, PG&E issued Facilities Study (FS) reports for both projects under Amendment 39 on March 14 and March 16, 2006 that provided work scope and cost estimates for the interconnection of the Project. Following the issuance of the FS reports, and in accordance with Section 5 of FERC's Large Generation Interconnection Procedures (LGIP), the Project transitioned from the Amendment 39 process to the Large Generator Interconnection Procedures (LGIP). On April 4, 2006, Calpine requested PG&E to engineer, procure, construct, own and maintain the generator tie lines for the Project and change the Commercial Operation Date from July 2008 to June 1, 2010. On April 7, 2006, the California Independent System Operator (CAISO) and PG&E agreed that these changes were not Material Modifications pursuant to Section 4.4 of the LGIP and that a re-study was acceptable under the terms of Section 8.5 of the LGIP. Consequently, the Interconnection Facilities Study (IFAS) Plan was issued and agreed upon to determine the work scope and cost estimates for the generation tie line facilities assuming PG&E would engineer, procure, construct, own and maintain these Interconnection Facilities.

Based on the results of this FS Re-Study, the CAISO is granting final interconnection approval to the Russell City Energy Center Project.

Please note that this letter approving the interconnection of the project allows the project to connect to the CAISO Controlled Grid and to be eligible to deliver the project's output using available transmission. However, it does not establish the generation project's level of deliverability for purposes of determining its Net Qualifying Capacity under the CAISO Tariff and in accordance with CPUC-adopted Resource Adequacy Rules. Therefore, this letter makes no representation, and Calpeak cannot rely on any statements herein, regarding the ability, or amount, of the output of the project to be eligible to sell Resource Adequacy Capacity. We encourage you to follow the baseline deliverability studies ongoing at the CAISO. For more information on generation deliverability, please reference the web links provided in the attachment to this letter.

CM LOG #
06-0975

PO Box 639014 Folsom, California 95763-9014 Telephone: 916 351-4400

If you have questions about the CAISO review of this study, please contact Larry Tobias at (916) 608-5763 (LTobias@caiso.com) or myself at (916) 608-5880 (GDeShazo@caiso.com).

Sincerely,

Gary DeShazo
Director of Regional Transmission – North

cc: Mike Hatfield (Calpine via e-mail mailto: mihatfield@calpine.com)

Mark Esguerra (PG&E via e-mail, mailto: PME8@pge.com)
Art McAuley (PG&E via e-mail, mailto: AKM3@pge.com)
Madeleine Aldridge (PG&E via e-mail, mailto: MEG5@pge.com)
Chris Gillis (PG&E via e-mail, mailto: Cxgl@pge.com)
Curt Irwin (PG&E via e-mail, mailto: CPI3@pge.com)

Armando Perez (ISO)
Dariush Shirmohammadi (ISO)
Judy Nickel (ISO via e-mail)
Dennis Peters (ISO via e-mail)
Tom French (ISO via e-mail)
Regional Transmission - North (ISO via e-mail)

Attachment

Project Overview:

The Project will consist of two gas turbine generators each rated at 180 MW and one steam turbine generator rated at 254 MW for a total output of 614 MW. The plant auxiliary load is 14 MW. The total net output to the PG&E transmission grid of the combined cycle Russell City Energy Center will be 600 MW. Each generator will have a three-phase 18/230 kV step-up transformer. The Project will be connected to PG&E's 230 kV bus at East Shore Substation in the city of Hayward, California via two 230 kV generator tie lines that will be owned and maintained by PG&E. The Commercial Operation Date is June 1, 2010.

Below is a summary of the Facilities Study (FS) Report

The Interconnection facilities work scope consists of:

- Providing transmission interconnection from the Project to the Point of Interconnection which includes a double-circuit 230 kV generator tie line from the RCEC to Esat Shore Substation.
- Install two line disconnect switches and associated substation construction to the point of interconnection.
- Providing a pre-parallel inspection, testing, SCADA, EMS setup, engineering support, etc.

The Network Upgrade facilities work scope consists of:

- Reconductoring the East Shore-San Mateo 230 kV line
- Reconductor the East Shore-Dumbarton 115 kV line.
- Reconfigure the East Shore 230 kV bus to a breaker-and-half scheme
- Protective relay replacement at San Mateo and Pittsburg Substations.
- Providing a pre-parallel inspection, testing, SCADA, EMS setup, engineering support, etc.
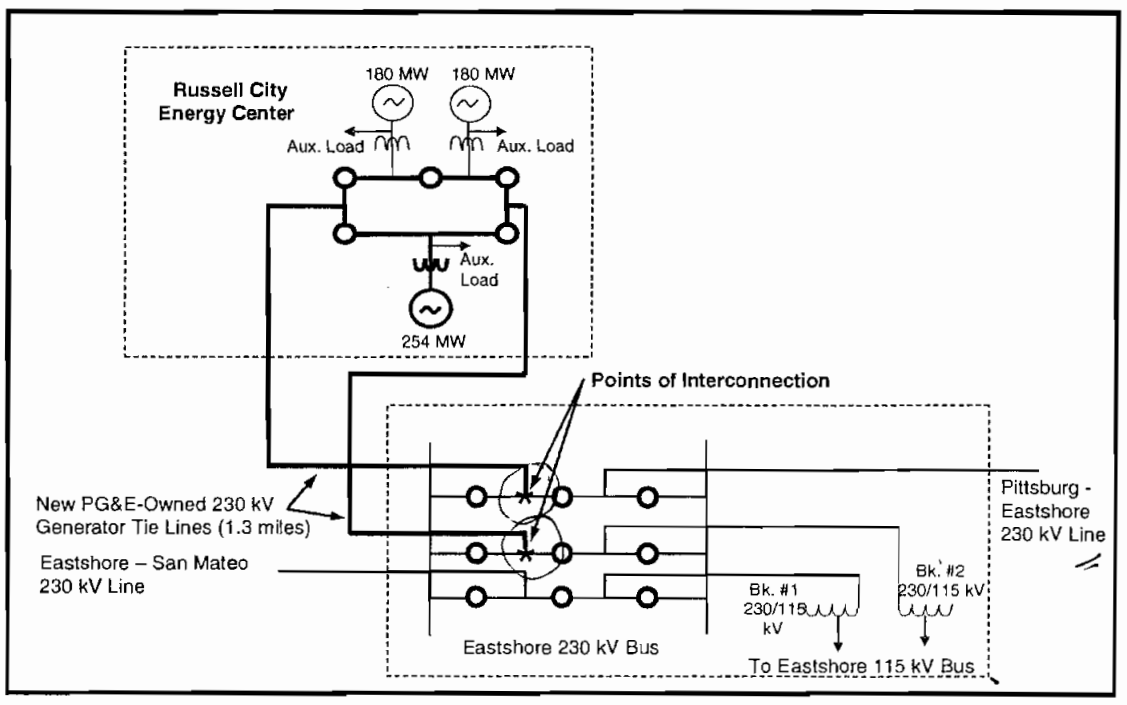
The figure below shows the approximate location of the Project and the transmission facilities in the area. The entire 230 kV generator tie line will be located within PG&E's existing Grant – East Shore 115 kV right-of-way, with the exception of an approximate 500 foot section from the PG&E right-of-way to the Project, where additional right of way must be acquired.