GALATI | BLEK LLP

455 Capitol Mall Suite 350
Sacramento CA 95814
Tel •916.441.6575
Fax •916.441.6553

March 13, 2013

California Energy Commission
DOCKETED
09-AFC-7C
TN 69909
MAR 13 2013

Christine Stora
Compliance Project Manager
Siting, Transmission and Environmental Protection Division
California Energy Commission
1516 Ninth Street, MS-2000
Sacramento, CA 95814-5512

Subject: **SUPPLEMENT NO. 2**
COMPLETE AIR QUALITY & PUBLIC HEALTH SECTIONS
PALEN SOLAR HOLDINGS, LLC'S PETITION FOR AMENDMENT
PALEN SOLAR ELECTRIC GENERATING SYSTEM
DOCKET NO. (09-AFC-7C)

Dear Ms. Stora,

In accordance with the official amendment to the proof of service list dated February 5, 2013, GalatiBlek LLP hereby submits one (1) compact disc of PSH's Supplement No. 2 Complete Air Quality & Public Health Sections for the Palen Solar Electric Generating System (PSEGS) (09-AFC-7C) on behalf of Palen Solar Holdings, LLC (PSH).

I certify under penalty of perjury that the foregoing is true, correct, and complete to the best of my knowledge. I also certify that I am authorized to submit this Supplement No.2 on behalf of PSH.

Sincerely,

Scott A. Galati
Counsel to Palen Solar Holdings, LLC

4.1 AIR QUALITY and PUBLIC HEALTH

This section presents the methodology and results of an analysis performed to assess potential impacts of airborne emissions from the construction and routine operation of the Palen Solar Energy Generating System Project. The “Applicant” (or PSEGS) is proposing to construct and operate a 500 megawatt (MW) (gross) solar power generation facility located in eastern Riverside County, California. PSEGS will be comprised of two adjacent solar fields and associated facilities with a total combined nominal output of approximately 500 MW. PSEGS will be developed in two operational phases: each phase will consist of one solar field and power block with approximately 250 MW of electricity. Each phase will also share common facilities, including a common area containing an administration building, warehouse, evaporation ponds, maintenance complex and a meter/valve station for incoming natural gas service to the site; an onsite switchyard; and a single-circuit 230 kV generation tie-line to deliver power to the electricity grid. Other onsite facilities will include access and maintenance roads (either dirt, gravel or paved), perimeter fencing, and other ancillary security facilities.

The Project would use heliostats—elevated mirrors guided by a tracking system mounted on a pylon—to focus the sun’s rays on a solar receiver steam generator (SRSG) located atop a solar tower near the center of each solar field to create steam. Each of the 250 MW units will have a dedicated SRSG/tower, solar field/heliostat array, and a dedicated non-reheat Rankine-cycle steam turbine generator/ power block. In each plant, one Rankine-cycle steam turbine will receive steam from the SRSG to generate electricity. The solar field and power generation equipment will start each morning after sunrise and will shut down (unless augmented by the auxiliary boiler) when insolation drops below the level required to keep the turbine online. To conserve water in the site’s desert environment, each plant will use an air-cooled condenser for the main steam-cycle. A wet surface air cooler (WSAC) will be used for auxiliary equipment cooling.

Station processes are as follows:

- Installation of 500 MW (gross) solar power generation equipment, consisting of two (2) 250 MW (gross) modules and two centralized power blocks.
- Installation of two (2) auxiliary boilers, one per power block, each rated at ~249.0 MMbtu/hr, fired on natural gas.
- Installation of two (2) night preservation boilers, one per power block, each rated at ~10.0 MMbtu/hr, fired on natural gas.
- Installation of two (2) emergency fire pump systems, one per power block, each consisting of a 617 horsepower (hp) diesel-fired engine coupled to a pump assembly capable of delivering sufficient water for fire suppression purposes.
- Installation of two (2) emergency electric generator systems, one per power block, each consisting of a 3633 hp (2500 kW) diesel fired engine coupled to an electrical generation assembly for emergency power purposes.
- Installation of two (2) wet-surface air condensers units, one per power block, each to provide cooling and heat rejection from a single power block process.
- Installation of all required auxiliary support systems.
- The Project requires off-site transmission line construction.
- The Project requires off-site pipeline construction for services such as natural gas.

Additional equipment to be installed and operated, which is common to both power blocks, is as follows:

- Installation of one (1) emergency fire pump system, consisting of a 617 horsepower (hp) diesel-fired engine coupled to a pump assembly capable of delivering sufficient water for fire suppression purposes.
- Installation of one (1) emergency electric generator system, consisting of a 398 hp (250 kW) diesel fired engine coupled to an electrical generation assembly for emergency power purposes.
- Mirror washing machines and site support vehicles.

4.1.1 Affected Environment

The affected environment and relevant project details are provided in the following sections.

4.1.1.1 Site Location

The Project site is located approximately 10 miles east of Desert Center and approximately 0.5 mile north of U.S. Interstate 10 (I-10) in Riverside County, California. Access to the site is via the Corn Springs Road exit on I-10. The Project will be located on public land managed by the BLM and authorized by BLM right-of-way #CACA – 48810, consisting of approximately 5,200 acres of flat, desert terrain south of the Palen Dry Lake. The Project site is within the jurisdiction of the South Coast Air Quality Management District (SCAQMD).

4.1.1.2 Project Facilities

The facility will consist of two 250 MW (gross) solar units. The Project would use heliostats—elevated mirrors guided by a tracking system mounted on a pylon—to focus the sun's rays on a solar receiver steam generator (SRSG) located atop a solar tower near the center of each solar field to create steam. Each of the 250 MW units will have a dedicated SRSG/tower, solar field/heliostat array, and a dedicated non-reheat Rankine-cycle steam turbine generator/ power block.

The Applicant is proposing to install two (2) emergency fire pump engines rated at approximately 617 hp, two (2) emergency generator sets rated at 3633 hp (2500 kW), two (2) auxiliary natural gas fired boilers each rated at ~249.0 MMbtu/hr, two (2) natural gas fired night preservation boilers rated at ~10 mmbtu/hr each, and two (2) wet-surface air condensers. In addition, the facility common area will have a separate emergency electrical generator and fir pump system. The engines will meet all applicable U.S. Environmental Protection Agency (EPA) Tier emissions standards depending upon engine size, year of manufacture, and service category.

Proposed equipment specifications, for emissions sources for both power blocks, are summarized as follows:

Auxiliary Boilers (2)

- Manufacturer: Rentech (or equivalent)
- Model: D-Type Watertube
- Fuel: Natural Gas
- Rated Heat Input: 249.0 MMbtu/hr
- Fuel consumption: ~244,118 scf/hr (Gas HHV 1020 btu/scf)
- Exhaust flow: ~74,100 acfm, at 100% load

- Exhaust temperature: ~300 degrees Fahrenheit (°F)

Night Preservation Boilers (2)

- Manufacturer: Rentech (or equivalent)
- Model: Watertube Type
- Fuel: Natural Gas
- Rated Heat Input: 10 mmbtu/hr
- Fuel Consumption: ~9,800 scf/hr
- Exhaust Flow: ~5000 acfm, at 100% load
- Exhaust temperature: ~300 degrees Fahrenheit (°F)

Fire Pump Engines (2)

- Manufacturer: Clarke (or equivalent)
- Model: JX6H-UFAD88 (or equivalent)
- Fuel: Diesel or distillate oil (15 ppmw S), 550 gal AGT
- Rated horsepower: ~617 hp
- Fuel consumption: ~34 gallons per hour (gph)
- Exhaust flow: ~4840 actual cubic feet per minute (acfm)
- Exhaust temperature: ~950 degrees Fahrenheit (°F)

Emergency Electrical Generators (2)

- Manufacturer: Caterpillar (or equivalent)
- Model: 3516C (or equivalent)
- Fuel: Diesel or distillate oil (15 ppmw S), 1500 gal AGT
- Rated horsepower: ~3633 (2500 kW)
- Fuel consumption: ~175 gph
- Exhaust flow: 19,600 acfm
- Exhaust temperature: 925 °F

Wet SAC (2)

- Manufacturer: SPX Cooling Technologies, Inc. (or equivalent)
- Number of Cells: 4
- Number of Fans: 4 (147,500 acfm each)
- Water circulation rate: 4,000 gallons per minute (gpm)
- Drift rate: <0.0005%
- Expected TDS: ~1500 ppm

Additional equipment common to both power blocks is as follows:

Fire Pump Engines (1)

- Manufacturer: Clarke (or equivalent)
- Model: JX6H-UFAD88 (or equivalent)
- Fuel: Diesel or distillate oil (15 ppmw S), 550 gal AGT
- Rated horsepower: ~617 hp
- Fuel consumption: ~34 gallons per hour (gph)

- Exhaust flow: ~4840 actual cubic feet per minute (acfm)
- Exhaust temperature: ~950 degrees Fahrenheit (°F)

Emergency Electrical Generators (1)

- Manufacturer: Caterpillar (or equivalent)
- Model: 250 kWe (or equivalent)
- Fuel: Diesel or distillate oil (15 ppmw S), 500 gal AGT
- Rated horsepower: ~398 (250 kW)
- Fuel consumption: ~20 gph
- Exhaust flow: 2,250 acfm
- Exhaust temperature: 855 °F

Mirror Washing Equipment

- Tractor-pulled crane-arm systems (diesel fuel)
- Small vehicle systems (diesel fuel)
- Three (3) – 8,000 gal AGT

The only fuels to be combusted by stationary sources on-site will be California-certified low-sulfur, low-aromatic diesel fuel used by the emergency fire pumps, the emergency generator engines, and the mirror washing equipment, and natural gas for the various boilers. Table 4.1-1 presents a fuel use summary for the facility. Fuel use values are based on the maximum heat rating of each system, fuel specifications, and maximum operational scenarios. Typical fuel analysis data is presented in Appendix 4.1A for all proposed fuels.

Table 4.1-1. Estimated Fuel Use Summary for the Project

System	Units	Per Hour	Per Day	Per Year
Auxiliary Boiler (each)	mmscf	0.2441	0.9764	313.8
Night Preservation Boiler (each)	mmscf	0.0098	0.1373	47.8
Large Fire Pump Engine (each)	gallons	34	34	6,766
Common Area FP Engine	gallons	34	34	6,766
Large Emergency Generator (each)	gallons	175	175	34,825
Common Area EG	gallons	20	20	400
MWM systems	gallons	-	-	3,212,000

Natural gas at 1020 btu/scf (HHV). Diesel fuel at 139,000 BTU/gal. See Appendix 4.1A for specific information. NG sulfur at 0.75 gr S/100 scf.

Each engine will only be tested for ~30-60 minutes on any given day (typically one day per week), and only one engine will be tested during any one 60-minute period. Maximum annual hours and fuel use for each engine is based on 199 per year.

Annual values include fuel use totals for all operating modes, while hourly and daily (except for the aux boilers) values are for normal full load firing mode only.

4.1.1.3 Climate and Meteorology

The site is located approximately 10 miles east of the Desert Center area (California), within the eastern portion of Riverside County, and experiences the following climate and meteorology patterns.

The Project site is located in the Mojave Desert Air Basin (MDAB) in California's Colorado Desert, which is a part of the larger Sonoran Desert that extends across southwest North America. The Colorado Desert region encompasses approximately seven million acres, extending from the Mexican border in the south to the higher-elevation Mojave Desert in the north and from the Colorado River in the east to the Peninsular mountain range in the west. The majority of the Colorado Desert is classified as a “low desert” and lies at a relatively low elevation, below 1,000 feet (above mean seal level), with the lowest point of the desert floor at 275 feet below sea level in the Salton Trough.

Although the highest peaks of the Peninsular Range reach elevations of nearly 10,000 feet, most of the region's mountains do not exceed 3,000 feet. These ranges block moist coastal air and rains, producing an arid climate.

The Colorado Desert's climate distinguishes it from other deserts. The region experiences greater summer daytime temperatures than higher-elevation deserts and almost never experiences frost. The mean maximum temperature in July and August exceed 100°F. In addition, the Colorado Desert, especially toward the southern portion of the region, experiences two rainy seasons per year, in the winter and late summer, while the more northerly Mojave Desert has only winter rains. During the summer, the Project Site will be generally influenced by a Pacific Subtropical High cell that sits off the coast, inhibiting cloud formation and encouraging daytime solar heating. The Colorado Desert is rarely influenced by cold air masses moving south from Canada and Alaska, as these frontal systems are typically weak and diffuse by the time they reach the desert. Most desert moisture arrives from infrequent warm, moist, and unstable air masses from the south.

The most significant large-scale phenomena affecting air quality in the Project area are the transport winds from the west. These prevailing winds are due to the proximity of the Colorado Desert to the coastal region; air masses pushed onshore in Southern California by differential heating are channeled through the San Gorgonio Pass into the Project area. (Palen 2009)

The climatic pattern for the Project region is a typical desert climate within the Mediterranean climate classification. The warmest month for the region is typically July, with the coldest month being December. The month with the highest precipitation is usually February. The eastern Mojave Desert region experiences a large number of days each year with sunshine, generally 345+ days per year. The region also traditionally experiences excellent visibility, *i.e.,* greater than 10 miles or more 95 percent of the time.

Representative climatic data for the Project Area was derived from the Blythe CAA Airport Station (#040927, Period of Record 7-1-1948 to 12-31-2008) located east of the Project Site. A summary of data from this site indicates the following:

- Average maximum daily temperature 87.7°F
- Average minimum daily temperature 59.7°F
- Highest mean maximum annual temperature 111.1°F
- Lowest mean minimum annual temperature 32.3°F
- Mean annual precipitation 4.02 inches

Air quality is determined primarily by the type and amount of pollutants emitted into the atmosphere, the nature of the emitting source, the topography of the air basin, and the local meteorological conditions. In the Project area, inversions and light winds can result in conditions for pollutants to accumulate in the region.

The predominant winds in the Project area are shown in Figure 5.2-1. Winds in the Project region are generally southerly (south-southeast through west-southwest) with a less frequent component of north-northwest and north winds. The annual and quarterly wind roses for the Blythe Airport Automated Surface Observing System (ASOS) site for the 2002 to 2006 calendar years are presented in Appendix 4.1B. Calm conditions occur approximately 16.03% of the time, with the average wind speed being 3.66 m/s.

Based on discussions with the South Coast Air Quality Management District (SCAQMD), meteorological data representative of the site (presented in Appendix 4.1B) can be derived from the Blythe ASOS station. As discussed in detail later, Blythe ASOS surface data were combined with Tucson, Arizona radiosonde data for 2002 to 2006 using the AERMOD meteorological processing programs and guidance documents.

4.1.2 Regulatory Environment

Although a regulatory compliance analysis is presented in Section 4.1.9, there are several SCAQMD regulations that directly affect the permitting and review process, such as the Determination of Compliance (DOC) for the Project as follows:

- New Source Review (NSR) Regulation XIII, Rule 1303 requires that Best Available Control Technology (BACT) be applied to:
- Any new Permit Unit which emits, or has the Potential to Emit, any increase of any Nonattainment Air Pollutant.
- Per Regulation XIII, Rule 1303, provide all required emissions mitigations prior to the issuance of the Permit to Construct.
- Provide an impact analysis per Regulation XIII, Rule 1303.
- Per Regulation XIII, Rule 1303, demonstrate prior to the issuance of the Authority to Construct (ATC) that all major stationary sources owned or operated by the Applicant, which are subject to emissions limitations, are either in compliance or on a schedule for compliance with all applicable emissions limitations under the Clean Air Act (CAA).
- Per Regulation XIII, Rule 1304, emergency equipment such as the proposed fire-pump systems, and emergency electrical generator systems are exempt from the districts modeling and emissions offset requirements.

In addition, the following should be noted:

- The SCAQMD NSR rule (Regulation XIII) does not define “cargo carriers”, but rather defines “mobile source” which includes the major cargo carrier modes, i.e., roadways, waterways, rail, and air.
- For purposes of calculating potential to emit, fugitive emissions from facility paved/unpaved roads are not included for the source.
- For purposes of calculating potential to emit, <u>secondary emissions</u> from facility operations are not included in the sources PTE calculations, except for in-plant vehicles which are “accumulated” per Rule 1306.

As such, the operational emissions from fugitive sources are included in the source’s potential to emit calculations, while in-plant vehicle emissions are accumulated, but not counted in the facility PTE values. These emissions have been quantified and are presented in Appendix 4.1A.

4.1.3 Environmental Impacts

Potential impacts for the Project are discussed in the following sections.

4.1.3.1 Current Facility Emissions and Permit Limitations

The site is currently vacant with no known emissions sources (other than natural sources). The property is the site of the previously proposed Palen Solar Power Project (Solar Millennium) per 09-AFC-7 (August 2009). A slight level of construction activity related to the previous project has taken place at the site, i.e., primarily basic access road clearing and grading.

4.1.3.2 Facility Emissions

Installation and operation of the Project will result in a change in the emissions signature for the site. Criteria pollutant emissions from the proposed auxiliary boilers, night preservation boilers, fire pump engines, emergency generator engines, wet-SACs, and on-site mobile equipment are delineated in the following sections, while emissions of hazardous air pollutants (HAPs) are discussed in Section 4.1.12, Public Health, and quantified in Appendix 4.1A.

4.1.3.3 Normal Operations

Operation of the Project will result in emissions to the atmosphere of both criteria and toxic air pollutants. Criteria pollutant emissions will consist primarily of nitrogen oxides (NO_x), carbon monoxide (CO), volatile organic compounds (VOCs), sulfur oxides (SO_x), sub 10-micron particulate matter (PM_{10}), and sub 2.5-micron particulate matter particulate matter ($PM_{2.5}$). Air toxic pollutants will consist of a combination of toxic gases and toxic particulate matter species. Table 4.1-2 lists the pollutants that may potentially be emitted from the Project.

Table 4.1-2. Criteria and Toxic Pollutants Potentially Emitted from the Project

Criteria Pollutants	Toxic Pollutants	
NO_x	Acetaldehyde	PAHs
CO	Acrolein	Propylene
VOCs	Benzene	Propylene Oxide
SO_x	1-3 Butadiene	Toluene
PM_{10}/$PM_{2.5}$	Ethylbenzene	Xylene
Lead	Formaldehyde	Diesel Particulate Matter
	Hexane Naphthalene	
	Copper	Beryllium

4.1.3.4 Criteria Pollutant Emissions

Tables 4.1-3, 4.1-4, and 4.1-5 present data on the criteria pollutant emissions expected from the plant equipment and systems under normal operating scenarios. Table 4.1-6 presents a summary of total facility operational emissions. Table 4.1-7 delineates the potential to emit for the Project.

Table 4.1-3. Fire Pump Engine Emissions for the Project

Pollutant	Emission Factor (g/hp-hr)	Max Hourly Emissions for Each Engine (lbs)	Max Daily Emissions for Each Engine (lbs)	Max Annual Emissions for All Engines (tons)

~617 HP FP Engines (2)				
NO_x	2.6	3.53	3.53	0.70
CO	0.5	0.68	0.68	0.14
VOCs	0.1	0.14	0.14	0.027
SOx	15 ppmw S	0.007	0.007	0.0014
$PM_{10/2.5}$	0.09	0.12	0.12	0.024
~617 HP FP Engine (1) Common Area				
NO_x	2.6	3.53	3.53	0.35
CO	0.5	0.68	0.68	0.07
VOCs	0.1	0.14	0.14	0.014
SOx	15 ppmw S	0.007	0.007	0.0007
$PM_{10/2.5}$	0.09	0.12	0.12	0.012

* All particulate matter is classified as diesel particulate matter (DPM).

g/hp-hr – grams per horsepower-hour

lbs – pounds

These engines are not run during the same hour as the Emergency Generator Engines noted below. Secondly, testing is for <60 minutes only, so the maximum hourly emissions above represent the maximum daily emissions as well. Each engine is run <=199 hours per year.

Per NSPS Subpart IIII, FP engines rated at 175 to 300 hp, with rpm values greater than 2650, may comply with the engine category emissions limits for 2008.

Table 4.1-4. Emergency Generator Engine Emissions for the Project

Pollutant	Emission Factor (g/hp-hr)	Max Hourly Emissions for Each Engine (lbs)	Max Daily Emissions for Each Engine (lbs)	Max Annual Emissions for All Engines (tons)
~3633 HP EGS Engines (2)				
NO_x	0.59	4.72	4.72	0.94
CO	0.03	0.24	0.24	0.05
VOCs	0.01	0.08	0.08	0.016
SOx	15 ppmw S	0.04	0.04	0.007
$PM_{10/2.5}$	0.03	0.24	0.24	0.048
~398 HP EGS Engine (1) Common Area				
NO_x	2.97	2.6	2.6	0.26
CO	0.36	0.32	0.32	0.031
VOCs	0.1	0.09	0.09	0.009
SOx	15 ppmw S	0.001	0.001	0.0004
$PM_{10/2.5}$	0.079	0.07	0.07	0.007

* All particulate matter is classified as diesel particulate matter (DPM).

g/hp-hr – grams per horsepower-hour

lbs – pounds

These engines are not run during the same hour as the Fire Pump Engines noted above. Secondly, testing is for <60 minutes only, so the maximum hourly emissions above represent the maximum daily emissions as well. Each engine is run <=199 hours per year.

Table 4.1-5. Auxiliary Boilers, Night Preservation Boilers, and Wet-SAC Emissions for the Project

Auxiliary Boilers (2)				
Pollutant	**Max Hourly Emissions for Each Boiler (lbs)**	**Max Daily Emissions for Each Boiler (lbs)**	**Max Annual Emissions for Each Boiler (tons)**	**Max Annual Emissions for Both Boilers (tons)**
NOx	2.74	11.54	1.985	3.97
CO	4.50	25.58	4.39	8.78
VOC	1.34	7.6	1.31	2.61
SOx	0.747	2.82	0.486	0.972
PM10/PM2.5	1.25	4.774	0.82	1.64
Low plus high load emissions for daily and annual, including SU. Appendix 4.1A presents emissions data for each boiler.				
Night Preservation Boilers (2)				
NOx	0.11	1.54	0.268	0.536
CO	0.366	5.12	0.892	1.78
VOC	0.054	0.756	0.132	0.263
SOx	0.0093	0.129	0.0225	0.045
PM10/PM2.5	0.05	0.70	0.122	0.244
Emissions data at full load, 14 hours per day, 4872 hours per year each. Appendix 4.1A presents emissions data for each boiler. Annual emissions are for all operating modes.				
Wet-SAC Units (2)				
Pollutant	**TDS, mg/L**	**Max Hourly Emissions for Each WSAC (lbs)**	**Max Daily Emissions for Each WSAC (lbs)**	**Max Annual Emissions for Both WSAC (tons)**
PM_{10}/ $PM_{2.5}$	~1500	0.015	0.18	0.03

Drift fraction – 0.000005

Emissions are a total from 4 cells, assuming operational time of 12 hr/day and 2000 hrs/year (each WSAC).

Auxiliary boiler startup emissions are presented in Table 4.1-6.

Table 4.1-6 Aux Boiler Startup Emissions

Pollutant	lbs/SU*	Lbs/SU Hour**	Tons Per Year (Both Boilers)
NOx	1.37	1.54	0.48
CO	2.27	4.50	0.79
VOC	0.67	1.32	0.23
SOx	0.05	0.09	0.02
PM10/PM2.5	0.15	0.23	0.05

*SU period is 30 minutes

**SU hour is 30 minutes at SU, plus 30 minutes at low load.

348 SU/yr, 174 SU hrs/yr

Table 4.1-7 presents the emissions estimates for the mirror washing equipment and in-plant dedicated vehicles.

Table 4.1-7. Operations Mobile Source Emissions

Pollutant	lbs/hr	lbs/day	tons/year
Mirror Washing Equipment (Exhaust)			
NO_x	0.46	9.11	1.66
CO	0.20	4.01	0.73
VOCs	0.21	4.2	0.77
SO_x	0.21	4.14	0.76
PM_{10}	0.014	0.27	0.05
$PM_{2.5}$	0.014	0.27	0.05
In-Plant Support Vehicles (Exhaust)			
NO_x	0.183	4.39	0.8
CO	0.167	4.01	0.73
VOCs	0.022	0.52	0.1
SO_x	neg	0.011	0.002
PM_{10}	neg	0.234	0.043
$PM_{2.5}$	neg	0.233	0.043
Fugitive Dust Emissions from Onsite Operations Activities			
Unpaved Road Use (PM10/PM2.5)	n/a	61.1/12.95	11.14/2.4
Paved Road Use (PM10/PM2.5)	n/a	0.26/0.04	0.05/0.008

Tables 4.1-8 through 4.1-11 present the summary of emissions for the various programs such as CEQA, SCAQMD, PSD, etc.

Table 4.1-8. Summary of Facility Emissions for the Project For CEC/CEQA

Pollutant	Max, lbs/hr	Max, lbs/day	Max, tons/year
NO_x	32.5	57.96	8.42
CO	30.77	74.62	11.93
VOCs	8.85	21.29	3.43
SO_x	2.07	7.94	1.37
PM_{10}	9.75	131.10	23.68
$PM_{2.5}$	5.16	31.50	5.46

Fugitive emissions from onsite paved and unpaved roads, as well as mobile equipment exhaust emissions are included.

Table 4.1-9. Summary of Facility Emissions for the Project For SCAQMD

Pollutant	Max, lbs/hr	Max, lbs/day	Max, tons/year
NO_x	32.09	49.13	6.81
CO	30.51	68.70	10.85
VOCs	8.72	18.72	2.96

Table 4.1-9. Summary of Facility Emissions for the Project For SCAQMD

Pollutant	Max, lbs/hr	Max, lbs/day	Max, tons/year
SO_x	1.98	6.08	1.03
PM_{10}	4.31	12.41	2.01
$PM_{2.5}$	4.31	12.41	2.01

Fugitive emissions from onsite paved and unpaved roads, as well as mobile equipment exhaust emissions are not included.

Table 4.1-10. Summary of Facility Emissions for the Project For SCAQMD Offset Determination

Pollutant	Max, lbs/hr	Max, lbs/day	Max, tons/year
NO_x	9.46	26.50	4.55
CO	27.67	65.86	10.56
VOCs	8.05	17.99	2.88
SO_x	1.88	5.98	1.02
PM_{10}	3.40	11.50	1.92
$PM_{2.5}$	3.40	11.50	1.92
SCAQMD 30 Day Emissions Values, lbs/day			
NO_x	27.38		
CO	68.06		
VOCs	18.59		
SO_x	6.18		
PM_{10}	11.88		
$PM_{2.5}$	11.88		

Fugitive emissions from onsite paved and unpaved roads, as well as mobile equipment exhaust emissions are not included. Emissions from equipment exempt from offsets per Rule 1302 are not included.

Table 4.1-11. Summary of Project PSD Status

Pollutant	Max, TPY	PSD Threshold, TPY (Major/SER)	PSD Applicable
NO_x	6.81	250/40	No
CO	10.85	250/100	No
VOCs	2.96	250/40	No
SO_x	1.03	250/40	No
PM_{10}	2.01	250/15	No
$PM_{2.5}$	2.01	250/10	No
CO2e	44619	100,000	No

Emissions from the use of on-site mobile equipment are not included in Table 4.1-7, per the following:

- These emissions, per Rule 1303 are classified as “secondary” and are not to be included in the source’s potential to emit.

- Mobile sources, such as the vehicles proposed for on-site operations use are clearly exempt from the AQMD permitting regulations. Appendix 4.1A contains a delineation of the estimated mobile source on-site operational emissions.
- These vehicles, depending upon type, will be properly licensed and registered through the California Department of Motor Vehicles.
- Both the AQMD and State emissions inventories clearly anticipate and forecast emissions for motor vehicles for future years. Therefore, it is reasonable to assume these emissions are already included in the AQMD and State emissions projections and air quality planning analyses. As such, the emissions are not “new” or “un-anticipated.” Appendix 4.1A presents summary data on the vehicle emissions and use growth rates for the SCAQMD.

Pursuant to District Rule 1304, the offset thresholds are applied on a facility basis at the following threshold values:

- CO 29 tons per year (tpy)
- $PM_{10/2.5}$ 4 tpy
- NOx 4 tpy
- SOx 4 tpy
- VOC 4 tpy

Based on the above noted offset thresholds, and the values in Table 4.1-7, the facility would be required to obtain offsets pursuant to Rule 1304 for NOx only. Mitigation for NOx will be accomplished by participation in the NOx RECLAIM program, i.e., ERCs for NOx will not be required. The criteria pollutant mitigation strategy for the Project is discussed in Appendix 4.1G.

Based on the values in Tables 4.1-6 and 4.1-7, the new facility will not be a “major polluting facility” per SCAQMD NSR Regulation XIII for any criteria pollutant, since the facility lies in the non-Palo Verde portion of Riverside County within the MDAB, which has the following major polluting facility emissions threshold levels:

- NOx, CO, VOC, SOx, PM10 100 tpy

Detailed emissions data on the facility are presented in Appendix 4.1A. The facility will not trigger the Prevention of Significant Deterioration (PSD) program requirements; therefore, a PSD increment and impact analysis protocol is not required (see Appendix 4.1C).

4.1.4 Greenhouse Gas Emissions

Operational emissions of greenhouse gases (GHGs) will be primarily from the combustion of fuels in the auxiliary and night preservation boilers, fire pumps, emergency generator engines, and on-site mobile equipment use. Emissions factors derived from the California Climate Action Registry General Reporting Protocol (GRP) (6/2006).

- Total operational emissions of GHG (CO2e) from onsite stationary and mobile source equipment are estimated to be 44,619 tons/yr.

See Appendix 4.1A for emissions support data and calculations.

4.1.5 Hazardous Air Pollutants

See Section 4.1.12 and Appendix 4.1A for a detailed discussion and quantification of hazardous air pollutant emissions from the Project and the results of the health risk assessment (HRA). See Appendix 4.1D for the public health analysis support materials. Section 4.1.12 also discusses the need for Risk Management Plans pursuant to 40 CFR 68 and the California Accidental Release Program (CalARP) regulations.

4.1.6 Construction

Construction-related emissions are based on the following:

- The total project site acreage is 3794. Only 337.2 acres will actually be disturbed (grading, scraping, leveling, etc.) during construction. The maximum acreage to be disturbed on any single day is 34 acres.
- Moderate site preparation will be required prior to construction of the array fields, power blocks, control building foundations, support structures, and other project features.
- Construction activity is expected to last for a total of ~33 months.

Construction-related issues and emissions at the Project site are consistent with issues and emissions encountered at any construction site. Compliance with the provisions of the following permits (as incorporated in the CEC Conditions of Certification) will generally result in minimal site emissions: (1) grading permit, (2) Storm Water Pollution Prevention Plan (SWPPP) requirements (construction site provisions), (3) use permit, (4) building permits, and (5) the SCAQMD ATC permit, which will require compliance with the provisions of all applicable fugitive dust rules that pertain to the site construction phase. An analysis of construction site emissions is presented in Appendix 4.1E. This analysis incorporates the following mitigation measures or control strategies:

- The Applicant will have an on-site construction mitigation manager who will be responsible for the implementation and compliance of the construction mitigation program. The documentation of the ongoing implementation and compliance with the proposed construction mitigations will be provided on a periodic basis.
- All unpaved roads and disturbed areas in the Project and laydown construction sites will be watered as frequently as necessary to control fugitive dust. The frequency of watering will be on an average schedule of every three-four hours during the daily construction activity period. Watering may be reduced or eliminated during periods of precipitation.
- On-site vehicle speeds will be limited to less than or equal to 15 miles per hour (mph) on unpaved areas within the Project construction site.
- The construction site entrance(s) will be posted with visible speed limit signs.
- All construction equipment vehicle tires will be inspected and cleaned as necessary to be free of dirt prior to leaving the construction site via paved roadways.
- Gravel ramps will be provided at the tire cleaning area.
- All unpaved exits from the construction site will be graveled or treated to reduce track-out to public roadways.
- All construction vehicles will enter the construction site through the treated entrance roadways, unless an alternative route has been provided.

- Construction areas adjacent to any paved roadway will be provided with sandbags or other similar measures as specified in the construction SWPPP to prevent runoff to roadways.
- All paved roads within the construction site will be cleaned on a periodic basis (or less during periods of precipitation), to prevent the accumulation of dirt and debris.
- The first 500 feet of any public roadway exiting the construction site will be cleaned on a periodic basis (or less during periods of precipitation), using wet sweepers or air-filtered dry vacuum sweepers, when construction activity occurs or on any day when dirt or runoff from the construction site is visible on the public roadways.
- Any soil storage piles and/or disturbed areas that remain inactive for longer than 10 days will be covered, or treated with appropriate dust suppressant compounds.
- All vehicles used to transport solid bulk material on public roadways and have the potential to cause visible emissions will be covered, or the materials will be sufficiently wetted and loaded onto the trucks in a manner to minimize fugitive dust emissions. A minimum freeboard height of two feet will be required on all bulk materials transport.
- Wind erosion control techniques (such as windbreaks, water, chemical dust suppressants, and/or vegetation) will be used on all construction areas that may be disturbed. Any windbreaks installed to comply with this condition will remain in place until the soil is stabilized or permanently covered with vegetation.
- Disturbed areas will be re-vegetated or covered with gravel or other dust suppressant material as soon as practical and restored in accordance with BLM requirements.

To mitigate exhaust emissions from construction equipment, the Applicant is proposing the following:

- The Applicant will work with the construction contractor to use, to the extent feasible, EPA/Air Resources Board (ARB) Tier II/Tier III engine compliant equipment for equipment over 100 hp.
- Ensure periodic maintenance and inspections per the manufacturer's specifications.
- Reduce idling time through equipment and construction scheduling.
- Use California low sulfur diesel fuels (<=15 ppmw S).

Based on the temporary nature and the time frame for construction, the Applicant believes these measures will reduce construction emissions and impacts to levels that are less than significant. Use of these mitigation measures and control strategies will ensure the site does not cause any violations of existing air quality standards as a result of construction-related activities. Appendix 4.1E presents the evaluation of construction related emissions. Appendices 4.1B and 4.1E present data on the construction related temporary ambient air quality impacts.

Table 4.1-12 presents data on the regional air quality significance thresholds currently being implemented by the SCAQMD.

Table 4.1-12. SCAQMD CEQA Significance Thresholds

Pollutant	Construction, lbs/day	Operation, lbs/day
Carbon Monoxide	550	550
Oxides of Nitrogen	100	55
Volatile Organic Compounds	75	55

Oxides of Sulfur	150	150
Particulate Matter (PM10)	150	150
Source: SCAQMD, Localized Significance Threshold Methodology, June 2003.		

A comparison of construction and operational emissions (in Appendices 4.1A and 4.1E) to the significance values in Table 4.1-8 indicates the following:

- On-site construction emissions will exceed the daily significance thresholds for NOx and VOC only.
- Operational emissions are not expected to exceed the daily significance thresholds for any pollutant.

A conformity analysis per the Code of Federal Regulations (40 CFR Parts 6 and 51), and SCAQMD Regulation XIX is not required since the project is located in an area which has a status of "unclassified/attainment" for all federal air quality standards.

4.1.7 Best Available Control Technology Evaluation

4.1.7.1 Proposed Facility Control Technologies

Table 4.1-13 presents the proposed BACT levels and technologies for the new boilers, fire pumps emergency generator engines, and wet-SACs.

Table 4.1-13. BACT for the Project Boilers, Fire Pump and Emergency Generator Engines, and Wet-SACs

Pollutant	BACT Emissions Level	BACT System(s)	Meets Current BACT Requirements
Emergency Generator IC Engines (3633 bhp)			
NO_x	2.6 g/hp-hr	Engine Design	Yes
CO	2.6 g/hp-hr	Engine Design	Yes
VOCs	0.3 g/hp-hr	Engine Design and Low Aromatic Fuel	Yes
SO_x	Fuel S <= 15 ppmw S	Fuel S <= 15 ppmw S	Yes
PM_{10}/ $PM_{2.5}$	0.07 g/hp-hr	Engine design and ultra low sulfur diesel (ULSD)	Yes
Emergency Generator IC Engine (398 bhp)			
NO_x	2.7 g/hp-hr	Engine Design	Yes
CO	2.6 g/hp-hr	Engine Design	Yes
VOCs	0.3 g/hp-hr	Engine Design and Low Aromatic Fuel	Yes
SO_x	Fuel S <= 15 ppmw S	Fuel S <= 15 ppmw S	Yes
PM_{10}/ $PM_{2.5}$	0.15 g/hp-hr	Engine design and ultra low sulfur diesel (ULSD)	Yes
Emergency Fire Pump Engines (~617 bhp)			
NO_x	2.6 g/hp-hr	Engine Design	Yes
CO	0.5 g/hp-hr	Engine Design	Yes
VOCs	0.1	Engine Design and Low Aromatic Fuel	Yes
SO_x	Fuel S <= 15 ppmw S	Fuel S <= 15 ppmw S	Yes
PM_{10}/ $PM_{2.5}$	0.09 g/hp-hr	Engine design and ultra low sulfur diesel	Yes

Table 4.1-13. BACT for the Project Boilers, Fire Pump and Emergency Generator Engines, and Wet-SACs

Pollutant	BACT Emissions Level	BACT System(s)	Meets Current BACT Requirements
		(ULSD)	
Auxiliary Boilers (240 mmbtu/hr)			
NO_x	9 ppm, 0.0110 lb/mmbtu	ULNB, FGR, GCP, Natural Gas	Yes
CO	50 ppm, 0.0366 lb/mmbtu	ULNB, FGR, GCP, Natural Gas	Yes
VOCs	12.6 ppm, 0.0054 lb/mmbtu	ULNB, FGR, GCP, Natural Gas	Yes
SO_x	0.33 g S/100 scf, 0.000924 lb/mmbtu	ULNB, FGR, GCP, Natural Gas	Yes
PM_{10}/ $PM_{2.5}$	0.33 g S/100 scf, 0.005 lb/mmbtu	ULNB, FGR, GCP, Natural Gas	Yes
ppm at 3% O2 dry, VOC as CH4			
Night Preservation Boilers (15 mmbtu/hr)			
NO_x	9 ppm, 0.0110 lb/mmbtu	LNB, FGR, GCP, Natural Gas	Yes
CO	50 ppm, 0.0366 lb/mmbtu	LNB, FGR, GCP, Natural Gas	Yes
VOCs	12.6 ppm, 0.0054 lb/mmbtu	LNB, FGR, GCP, Natural Gas	Yes
SO_x	0.33 g S/100 scf, 0.000924 lb/mmbtu	LNB, FGR, GCP, Natural Gas	Yes
PM_{10}/ $PM_{2.5}$	0.33 g S/100 scf, 0.005 lb/mmbtu	LNB, FGR, GCP, Natural Gas	Yes
ppm at 3% O2 dry, VOC as CH4			
Wet-SACs			
PM_{10}/ $PM_{2.5}$	0.015 lb/hr per WSAC	Drift Eliminators at 0.0005%	Yes
ULNB = ultra low NOx burners, FGR-flue gas recirc, GCP-good combustion practices, see Appendix 4.1A for boiler specifications, etc.			

Based on the above data, the proposed emissions levels for the new boilers, fire pumps, emergency generator engines, and wet-SACs meet the BACT requirements of the SCAQMD.

4.1.8 Air Quality Impact Analysis

This section describes the results, in both magnitude and spatial extent of ground level concentrations resulting from emissions from the Project. The maximum modeled concentrations were added to the maximum background concentrations to calculate a total impact.

Potential air quality impacts were evaluated based on air quality dispersion modeling, as described in herein. All input and output modeling files are contained on a CD-ROM disk provided to CEC Staff under separate cover. All modeling analyses were performed using the techniques and methods as discussed with the SCAQMD.

4.1.8.1 Dispersion Modeling – Primary Model Selection

For modeling the potential impact of the Project in terrain that is both below and above stack top (defined as simple terrain when the terrain is below stack top and complex terrain when it is above stack top), the EPA guideline model AERMOD (version12345) was used as well as the latest versions of the AERMOD preprocessors to determine surface characteristics (AERSURFACE version13016), process meteorological data (AERMET version12345), and determine receptor elevations and hill slope factors (AERMAP version11103). The purpose of the AERMOD modeling analysis was to evaluate compliance with California and Federal air quality standards.

The surface meteorological data processed for AERMOD were five recent years (2002 to 2006) of Automated Surface Observing Systems (ASOS) data from Blythe Airport. Due to its proximity, the Blythe Airport data are considered to be representative of dispersion conditions for the Project site. These five years of surface data were selected because they are the most recent five years available at the time of the data processing that also met the minimum 90 percent data recovery rate requirement (for each calendar year) after combining with concurrent upper-air data. ASOS surface data for Blythe Airport were downloaded from the National Climatic Data Center (NCDC) website in the hourly Integrated Surface Data (ISD) format and then combined with upper-air data from Tucson, Arizona (upper air sounding data were downloaded from the NOAA/RAOB website for the same time period and processed by AERMET).

AERMOD input data options are listed below. Use of these options follows the EPA's modeling guidance. Default model option1 for temperature gradients, wind profile exponents, and calm processing, which includes final plume rise, stack-tip downwash, and elevated receptor terrain heights option, and all sources were modeled as rural sources.

4.1.8.2 Additional Model Selections

Several other EPA models and programs were used to quantify pollutant impacts on the surrounding environment based on the emission sources operating parameters and their locations. The models used were Building Profile Input Program for PRIME (BPIP-PRIME, current version 04274), which was used to determine building dimensions input into AERMOD. Due to the relatively short release heights for all the facility stacks and distance to nearby water bodies, no inversion breakup or shoreline fumigation impacts would be expected to occur.

4.1.8.3 Good Engineering Practice Stack Height Analysis

Formula Good Engineering Practice (GEP) stack heights were calculated by BPIP-PRIME based on the Project site plans as around 262 meters in the Power Blocks for the fire pumps, auxiliary boilers, night preservations boilers and two of the four wet-surface air condenser cells in each power block (due to the 228.6 meter high solar tower) and 91.45 meters for the emergency generator and the other two wet-surface air condenser cells (due to the 36.58 meter high air cooled condenser). In the common area, GEP stack heights were calculated by BPIP-PRIME as 36.58 meters for the emergency generator and firepump (due to the 14.63 meter high mechanical/maintenance/electrical

[1]To reduce run times for the area source modeled for fugitive dust and the large number of point sources modeled for mobile combustion source equipment, the TOXICS keyword was used for modeling construction impacts as well as operational impacts when including mirror washing and other onsite vehicles, modeled as area sources for unpaved areas or line sources for paved areas.

shop). All of the design stack heights are less than the calculated formula-GEP stack heights, thus downwash effects were included in the modeling analysis.

BPIP-PRIME was used to generate the wind-direction-specific building dimensions for input into AERMOD.

4.1.8.4 Receptor Grid Selection and Coverage

Receptor elevations were determined from the U.S. Geological Survey (USGS) Digital Elevation Model (DEM) data using the 7.5-minute format DEM data for the surrounding nine USGS quads. Receptor spacing in the DEM data was 10-meters (between grid nodes) for the USGS quad containing the project (Sidewinder Well) and 30-meter spacing for the surrounding eight quads. Since DEM data coordinates are referenced to UTM North American Datum 1927 (NAD27), Zone 11, AERMOD modeling was performed for NAD27 coordinates generated by AERMAP. Except for fence line receptors, the receptor locations were placed at DEM nodes appropriate for the grid spacing (receptor x,y locations are in whole meters with integer intervals equal to the receptor spacing).

Cartesian coordinate receptor grids are used to provide adequate spatial coverage surrounding the Project area for assessing ground-level pollution concentrations, identify the extent of significant impacts, and identify maximum impact locations. The receptor grids used in this analysis are as follows:

- 50-meter resolution from the Project fence line and extending outwards in all directions at least 500 meters from the Project fence line. This is called the downwash receptor grid. In addition, receptors were placed at approximate 50-meter intervals along the Project fence line.
- 200-meter resolution extending outwards from the edge of the downwash grid to 200 meters from the Project fence line in all directions. This is referred to as the intermediate receptor grid.
- 500-meter resolution extending outwards from the edge of the intermediate grid to 10 kilometers from the center of the Project in all directions. This is referred to as the coarse receptor grid.
- 50-meter resolution around any location on the intermediate or coarse grids where a maximum impact is modeled. This is referred to as a refined receptor grid. In the modeling analyses, all overall maximum impacts occurred in the downwash receptor grid, so no refined receptor grids were required.

Concentrations within the facility fence line were not calculated. Receptor locations and DEM data files were input into AERMAP (version11103) to calculate receptor elevations and hill height scales (and fenceline receptor heights) as per EPA guidance.

4.1.8.5 Meteorological Data Selection

The use of the five (5) years of NCDC surface meteorological data collected at the Blythe Airport ASOS monitoring location would satisfy the definition of on-site data. EPA defines the term “on-site data” to mean data that would be representative of atmospheric dispersion conditions at the source and at locations where the source may have a significant impact on air quality. Specifically, the meteorological data requirement originates from the Clean Air Act in Section 165(e)(1), which

requires an analysis "of the ambient air quality at the proposed site and in areas which may be affected by emissions from such facility for each pollutant subject to regulation under [the Act] which will be emitted from such facility." This requirement and EPA's guidance on the use of on-site monitoring data are also outlined in EPA's 1987 On-Site Meteorological Program Guidance for Regulatory Modeling Applications. The representativeness of meteorological data is dependent upon: (a) the proximity of the meteorological monitoring site to the area under consideration; (b) the complexity of the topography of the area; (c) the exposure of the meteorological sensors; and (d) the period of time during which the data are collected.

Representativeness is defined in the document "Workshop on the Representativeness of Meteorological Observations" (Nappo et. al., 1982) as "the extent to which a set of measurements taken in a space-time domain reflects the actual conditions in the same or different space-time domain taken on a scale appropriate for a specific application." Judgments of representativeness should be made only when sites are climatologically similar, as is the case with the meteorological monitoring site and the Project location. In determining the representativeness of the meteorological data set for use in the dispersion models at the Project site, the consideration of the correlation of terrain features to prevailing meteorological conditions, as discussed earlier, would be nearly identical to both locations since the orientation and aspect of terrain at the Project location correlates well with the prevailing wind fields as measured by and contained in the meteorological dataset. In other words, the same mesoscale and localized geographic and topographic features that influence wind flow patterns at the meteorological monitoring site also influence the wind flow patterns at the Project site.

Surface characteristics were determined with AERSURFACE using Land Use/Land Cover (LULC) data in accordance with EPA guidance documents ("*AERMOD Implementation Guide,"* 1/09/08; and "*AERSURFACE User's Guide*," EPA-454/B-08-001, 1/08) as described below. AERSURFACE uses USGS National Land Cover Data 1992 archives (NLCD92) to determine the midday albedo, daytime Bowen ratio, and surface roughness length representative of the surface meteorological station. ***Bowen ratio*** is based on a simple unweighted geometric mean while ***albedo*** is based on a simple unweighted arithmetic mean for the 10x10 km square area centered on the selected location (*i.e.,* no direction or distance dependence for either parameter). ***Surface roughness length*** is based on an inverse distance-weighted geometric mean for upwind distances up to one (1) km from the selected location. The circular surface roughness length area (1-km radius) can be divided into any number of sectors as appropriate (EPA guidance recommends that no sector be less than 30º in width). For this analysis, only one 360-degree sector was used. Both the monitoring location and Project site are predominantly rural with desert shrub land surface characteristics.

Given the location of the ASOS data relative to the Project site, Blythe Airport data were considered the most representative. These data were then processed using AERMET (Version13016) based on one 360-degree sector for roughness lengths.

As part of the AERMET input requirements, Albedo, Bowen Ratio, and Surface Roughness must be classified by month/season. These values were calculated with AERSURFACE for the meteorological data location (33.61822ºN, 114.71581ºW, NAD83 geographic coordinates) based on arid conditions, no snow cover during the winter season, and an airport location. Based on discussions with SCAQMD, all months were tabulated into an annual average based on their seasonal defaults (December through February as winter, March through May as spring, etc.) for an arid region with

average surface moisture. This gave an annual average surface roughness of 0.094 meters, an albedo of 0.22 and a Bowen ratio of 2.51.

For these reasons as discussed above, the Blythe ASOS meteorological data selected for the Project are expected to satisfy the definition of representative meteorological data. Thus, it is our assessment the meteorological data collected at the Blythe Airport ASOS site are identical to the dispersion conditions at the Project site and to the regional area. Based on the representativeness, the ASOS data were then processed using AERMET (Version 13016) based on one 360 degree sector for roughness lengths.

4.1.8.6 Background Air Quality

In 1970, the United States Congress instructed the EPA to establish standards for air pollutants, which were of nationwide concern. This directive resulted from the concern of the effects of air pollutants on the health and welfare of the public. The resulting CAA set forth air quality standards to protect the health and welfare of the public. Two levels of standards were promulgated—primary standards and secondary standards. Primary National Ambient Air Quality Standards (NAAQS) are "those which, in the judgment of the administrator [of the EPA], based on air quality criteria and allowing an adequate margin of safety, are requisite to protect the public health (state of general health of community or population)." The secondary NAAQS are "those which in the judgment of the administrator [of the EPA], based on air quality criteria, are requisite to protect the public welfare and ecosystems associated with the presence of air pollutants in the ambient air." To date, NAAQS have been established for seven criteria pollutants as follows: sulfur dioxide (SO_2), CO, ozone, nitrogen dioxide (NO_2), PM_{10}, $PM_{2.5}$, and lead.

The criteria pollutants are those that have been demonstrated historically to be widespread and have a potential to cause adverse health impacts. EPA developed comprehensive documents detailing the basis of, or criteria for, the standards that limit the ambient concentrations of these pollutants. The State of California has also established AAQS that further limit the allowable concentrations of certain criteria pollutants. Review of the established air quality standards is undertaken by both EPA and the State of California on a periodic basis. As a result of the periodic reviews, the standards have been updated and amended over the years following adoption.

Each Federal or State AAQS is comprised of two basic elements: (1) a numerical limit expressed as an allowable concentration, and (2) an averaging time which specifies the period over which the concentration value is to be measured. Table 4.1-14 presents the current Federal/National and California/State AAQS.

Table 4.1-14. State and Federal Ambient Air Quality Standards

Pollutant	Averaging Time	California Standards Concentration	National Standards Concentration
Ozone	1-hr	0.09 ppm (180 µg/m^3)	-
	8-hr	0.070 ppm (137 µg/m^3)	0.075 ppm (147 µg/m^3) (3-year average of annual 4th-highest daily maximum)
Carbon Monoxide	8-hr	9.0 ppm (10,000 µg/m^3)	9 ppm (10,000 µg/m^3)

Table 4.1-14. State and Federal Ambient Air Quality Standards

Pollutant	Averaging Time	California Standards Concentration	National Standards Concentration
	1-hr	20 ppm (23,000 μg/m^3)	35 ppm (40,000 μg/m^3)
Nitrogen dioxide	Annual Average	0.030 ppm (57 μg/m^3)	0.053 ppm (100 μg/m^3)
	1-hr	0.18 ppm (339 μg/m^3)	100 ppb (188 μg/m^3)
Sulfur dioxide			
	24-hr	0.04 ppm (105 μg/m^3)	
	3-hr	-	0.5 ppm (1300 μg/m^3)**
	1-hr	0.25 ppm (655 μg/m^3)	75 ppb (196 μg/m^3) (3-yr average of 99th percentiles)
Respirable particulate matter (10 micron)	24-hr	50 μg/m^3	150 μg/m^3
	Annual Arithmetic Mean	20 μg/m^3	-
Fine particulate matter (2.5 micron)	Annual Arithmetic Mean	12 μg/m^3	15.0 μg/m^3 (3-yr average)
	24-hr	-	35 μg/m^3 (3-yr average of 98th percentiles)
Sulfates	24-hr	25 μg/m^3	-
Lead	30-day	1.5 μg/m^3	-
	Rolling 3 Month Avg.	-	0.15 μg/m^3

μg/m^3 -- micrograms per cubic meter
ppm—parts per million
*not applicable in certain areas (not applicable to this project)
**secondary standard, not used in impact analysis
Source: CARB website, table updated 6/7/12.

Table 4.1-15 presents the form and design values for the standards noted above.

Table 4.1-15 Form and Design Values of AAQS

Pollutant and Averaging Time	NAAQS	SAAQS
Ozone 1-Hour	Not to be exceeded more than once per year, averaged over 3 years	Not to be exceeded. Lead and sulfate state AAQS are never to be equaled or exceeded.
Ozone 8-Hour	Annual 4th high 8 hour average, averaged over 3 years	
CO 1-Hour CO 8-Hour	Not to be exceeded more than once per year	
NO_2 1-Hour	3 year average of annual 98th percentile of the daily maximum 1 hour values	
NO_2 Annual	Not to be exceeded	
SO_2 1-Hour	3-year average of annual 99th	

	percentile of the daily maximum 1 hour values	
SO_2 3-Hour	Not to be exceeded more than once per year	
PM10 24-Hour	Not to be exceeded more than once per year, averaged over 3 years	
PM2.5 24-Hour	3 year average of annual 98th percentile of the daily 24 hour values	
PM2.5 Annual	Annual average values, averaged over 3 years	
Lead 3-Month Rolling Average	High rolling 3 month average over 3 years	

Brief descriptions of health effects for the main criteria pollutants are as follows.

Ozone—Ozone is a reactive pollutant that is not emitted directly into the atmosphere, but rather is a secondary air pollutant produced in the atmosphere through a complex series of photochemical reactions involving precursor organic compounds (POC) and NO_x. POC and NO_x are therefore known as precursor compounds for ozone. Significant ozone production generally requires ozone precursors to be present in a stable atmosphere with strong sunlight for approximately three hours. Ozone is a regional air pollutant because it is not emitted directly by sources, but is formed downwind of sources of POC and NO_x under the influence of wind and sunlight. Short-term exposure to ozone can irritate the eyes and cause constriction of the airways. In addition to causing shortness of breath, ozone can aggravate existing respiratory diseases such as asthma, bronchitis, and emphysema.

Carbon Monoxide—Carbon monoxide is a non-reactive pollutant that is a product of incomplete combustion. Ambient carbon monoxide concentrations generally follow the spatial and temporal distributions of vehicular traffic and are also influenced by meteorological factors such as wind speed and atmospheric mixing. Under inversion conditions, carbon monoxide concentrations may be distributed more uniformly over an area out to some distance from vehicular sources. When inhaled at high concentrations, carbon monoxide combines with hemoglobin in the blood and reduces the oxygen-carrying capacity of the blood. This results in reduced oxygen reaching the brain, heart, and other body tissues. This condition is especially critical for people with cardiovascular diseases, chronic lung disease or anemia, as well as fetuses.

Particulate Matter (PM10 and PM2.5)—PM_{10} consists of particulate matter that is 10 microns or less in diameter (a micron is one millionth of a meter), and fine particulate matter, $PM_{2.5}$, consists of particulate matter 2.5 microns or less in diameter. Both PM_{10} and $PM_{2.5}$ represent fractions of particulate matter, which can be inhaled into the air passages and the lungs and can cause adverse health effects. Particulate matter in the atmosphere results from many kinds of dust- and fume-producing industrial and agricultural operations, combustion, and atmospheric photochemical reactions. Some of these operations, such as demolition and construction activities, contribute to increases in local PM_{10} concentrations, while others, such as vehicular traffic, affect regional PM_{10} concentrations.

Several studies the EPA relied on for its staff report have shown an association between exposure to particulate matter, both PM_{10} and $PM_{2.5}$, and respiratory ailments or cardiovascular disease. Other studies have related particulate matter to increases in asthma attacks. In general, these studies have shown that short-term and long-term exposure to particulate matter can cause acute and chronic health effects. $PM_{2.5}$, which can penetrate deep into the lungs, causes more serious respiratory ailments.

Nitrogen Dioxide and Sulfur Dioxide—NO_2 and SO_2 are two gaseous compounds within a larger group of compounds, NO_x and SO_x, respectively, which are products of the combustion of fuel. NO_x and SO_x emission sources can elevate local NO_2 and SO_2 concentrations, and both are regional precursor compounds to particulate matter. As described above, NO_x is also an ozone precursor compound and can affect regional visibility. NO_2 is the “whiskey brown-colored” gas readily visible during periods of heavy air pollution. Elevated concentrations of these compounds are associated with increased risk of acute and chronic respiratory disease.

SO_2 and NO_2 emissions can be oxidized in the atmosphere to eventually form sulfates and nitrates, which contribute to acid rain. Large power plants with high emissions of these substances from the use of coal or oil are subject to emissions reductions under the Phase I Acid Rain Program of Title IV of the 1990 CAA Amendments. Power plants, with individual equipment capacity of 25 MW or greater that use natural gas or other fuels with low sulfur content, are subject to the Phase II Program of Title IV. The Phase II program requires plants to install Continuous Emission Monitoring Systems (CEMS) in accordance with 40 CFR Part 75 and report annual emissions of SO_x and NO_x. The acid rain program provisions do not apply to the Project.

Lead—Gasoline-powered automobile engines used to be the major source of airborne lead in urban areas. Excessive exposure to lead concentrations can result in gastrointestinal disturbances, anemia, and kidney disease, and, in severe cases, neuromuscular and neurological dysfunction. The use of lead additives in motor vehicle fuel has been eliminated in California and lead concentrations have declined substantially as a result.

The most current and representative criteria pollutant air quality monitoring sites to the Project site are the stations located within the South Coast Air Basin, i.e., Blythe, Indio, Palm Springs, Banning, and Riverside (Magnolia and Rubidoux). The following monitoring stations were not used to establish background values due to distance between the site and the monitoring location, and the differences in wind flow regimes potentially affecting background air quality:

- Niland-Imperial County (~38 miles)
- Brawley-Imperial County (~53 miles)
- El Centro-Imperial County (~66 miles)
- Calexico-Imperial County (~73 miles)
- Victorville-San Bernardino County (~132 miles)

The Riverside stations (Magnolia and Rubidoux) were used to supplement the CO and SO2 data. These stations are essentially urban monitoring values and will therefore represent conservative background values for use in a remote desert area.

Table 4.1-16 presents the SCAQMD attainment status (for the project site and region) and ambient monitoring data for these sites for the most recent three-year period (2009-2011) is summarized in Table 4.1-17. Monitoring data for year 2012 was not yet complete at the time of AFC preparation. Data from these sites are a reasonable representation of background air quality for the Project site and impact area.

Table 4.1-16. SCAQMD Attainment Status Table (Project Site/Region)

Pollutant	Averaging Time	Federal Status	State Status
Ozone	1-hr	n/a	NA
Ozone	8-hr	UNC/ATT	NA
CO	All	UNC/ATT	UNC
SO_2	All	UNC/ATT	ATT
NO_2	All	UNC/ATT	ATT
PM_{10}	All	UNC	NA
$PM_{2.5}$	All	UNC/ATT	UNC/ATT

ATT -- attainment
NA—non-attainment
UNC/ATT-unclassified-attainment
Source: CARB AQ Status Maps, website, 08/2012.

Table 4.1-17 Air Quality Values for Most Recent 3 Years

Pollutant	Site	Averaging Time	2009	2010	2011
Ozone, ppm	Blythe	1 Hr State	.072	.072	.066
	Indio		.097	.10	.099
	Palm Springs		.12	.114	.124
Ozone, ppm	Blythe	8 Hr Fed	.059	.065	.060
	Indio		.085	.084	.085
	Palm Springs		.097	.092	.092
PM10, ug/m3	Indio	24 Hr State	132	107	120.4*
	Palm Springs		140	144.8	86.1*
PM10, ug/m3	Indio	24 Hr Fed	132	107	56*
	Palm Springs		140	37	42
	Banning		99	55	51
PM10, ug/m3	Indio	Annual AM State	32.7	28.8	32.6
	Palm Springs		20.4	19.4	21.7
PM2.5, ug/m3	Indio	24 Hr Fed	17	14	16
	Palm Springs		15	13	13

PM2.5, ug/m3	Indio	Annual AM State	7.8	6.8	7.1
	Palm Springs		6.6	5.9	6.0
PM2.5, ug/m3	Indio	Annual AM Fed	7.8	6.9	7.1
	Palm Springs		6.6	5.9	6.0
CO, ppm	Palm Springs	8 Hr State	.67	.56	.65
	Riverside Magn		1.75	1.73	1.49
CO, ppm	Palm Springs	1 Hr State	-	-	-
	Riverside Magn		-	-	-
CO, ppm	Palm Springs	8 Hr Fed	.7	.5	.6
	Riverside Magn		1.8	1.7	1.5
CO, ppm	Palm Springs	1 Hr Fed	2.3	1.6	3.0
	Riverside Magn		2.5	2.5	3.1
NO2, ppm	Banning	1 Hr State	.056	.066	.061
	Palm Springs		.048	.046	.045
NO2, ppm	Banning	1 Hr Fed	.053	.053	.050
	Palm Springs		.039	.039	.039
NO2, ppm	Banning	Annual AM	.011	.012	.010
	Palm Springs		.008	.009	.008
SO2, ppm	Rubidoux	Annual AM	.001	.001	.000
	Rubidoux	24 Hr	.003	.005	.001
	Rubidoux	24 Hr Fed	.003	.005	.001
	Rubidoux	1 Hr	.006	.01	.017

* For 2011, the first high and second high PM10 data were exceptional events with Indio at 375.9 ug/m3 and 323 ug/m3, respectively and Palm Springs at 265.7 ug/m3.

Table 4.1-18 shows the background air quality values based upon the data presented in Table 4.1-14, and the form and design of each standard as delineated in Table 4.1-16.

Table 4.1-18. Background Air Quality Values

Pollutant and Averaging Time	Background Value, µg/m^3
Ozone – 1-hr	248
Ozone – 8-hr	184
PM_{10} – 24-hr (State/Federal)	144.8/140.0
PM_{10} – Annual	32.7
$PM_{2.5}$ – 24-hr (Federal)	15.7
$PM_{2.5}$ – Annual (State/Federal)	7.8/7.3
CO – 1-hr (State/Federal)	3543
CO – 8-hr (State/Federal)	1944/2000

NO_2 – 1-hr (State/Federal)	124.3/97.8
NO_2 – Annual	22.6
SO_2 – 1-hr	28.6
SO_2 – 3-hr	NA
SO_2 – 24-hr	13.1

Based on monitoring data by pollutant per Table 4.1-17 and the standard form per Table 4.1-15.

4.1.8.7 Impacts on Class II Areas

Pollutant impacts due to normal operations for the facility sources can occur due to wet-surface air condenser (PM_{10} and $PM_{2.5}$ only), testing of the emergency generator or fire pump engines, and boiler operations (all criteria pollutants). Testing of the emergency generators will not occur on the same hour as testing of the fire pump engines. Testing of the engines may occur concurrent with boiler operations. So 1-hour impacts were modeled for two different source groups (i.e., all emergency generators for both power blocks and the common area operating with all the other project equipment other than the firepumps for the first source group and all firepumps and other project equipment other than the emergency generators as the second source group). All other short-term (3-hour, 8-hour, and 24-hour) and long-term annual impacts were modeled for all sources operating concurrently (*i.e.,* engine testing operations were not restricted to different days for each group of engines).

In addition to modeling the traditional point sources, modeling analyses were performed to include tailpipe and fugitive dust emissions from onsite mobile sources during project operations. This includes light-duty trucks, primarily traveling on paved roads and in the power blocks and common area, and heavy-duty diesel mirror washing trucks, primarily traveling in the unpaved areas of the site. Onsite paved roads totaling 37602 square meters were modeled as line sources (a new AERMOD option), that included the perimeter paved road for the power blocks and common area. Onsite mobile source and fugitive dust emissions for the unpaved areas where the mirrors will be located (totaling 14470756 square meters) were modeled as a single area source.

4.1.8.8 Refined Analysis

Facility sources, consisting of the emergency generators, fire pumps, boilers, and wet-surface air condensers, were modeled in the analysis for comparisons with Significant Impact Levels (SILs) and CAAQS/NAAQS, as necessary.

Testing times for the emergency generators and firepumps were limited to 30 minutes per hour, , one test per day. However, for CO and SO_2 1-hour impacts, hourly emissions were conservatively based on 60 minutes/hour of testing and 3-hour, 8-hour, and 24-hour SO_2, CO, and PM impacts were conservatively based on 60 minutes/day of testing. This is reflected in the emissions table given below, where only the hourly NOx emissions for 1-hour impacts account for 30 minutes/hour of testing, As noted above, testing of the fire pump engines would not occur on the same hour as testing of the emergency generators, so 1-hour impacts for these two source groups were modeled separately and the maximum reported. For short-term averaging times, the maximum hourly auxiliary boiler and night preservation boilers emissions were modeled for all hours of the day. For annual averages, the tons/year emissions shown earlier were modeled for 14 hours per day for the night preservation boilers (5 PM through 5 AM) and 12 hours per day for the auxiliary boilers and wet-surface air condensers (6 AM through 6 PM). Mobile sources, when modeled, were modeled for 8

hours per day (8 AM through 4 PM) for both short-term and annual averaging times. The modeling input information for each pollutant and averaging period are shown in Table 4.1-19.

Table 4.1-19. Stack Parameters and Emission Rates for Refined AERMOD Modeling

Each Emissions Source or Device	Release Height (m)	Stack Temp. (Kelvins)	Exhaust Velocity (m/s)	Stack Diameter (m)	Emission Rates (g/s) or (g/s/m^2)			
					NO_X	SO_2	CO	$PM_{10/2.5}$
Averaging Period: 1-hour for Normal Operating Conditions								
Aux Boilers (each)	36.58	422.04	15.84	1.6764	0.3452	0.0941	0.5645	-
Night Boilers (each)	36.58	422.04	20.70	0.3810	0.0139	1.17E-3	0.0461	-
Power Block EGs (each)	6.10	769,26	45.64	0.5080	0.2977[a]	4.56E-3	0.0303	-
Common Area EG	6.10	730.37	42.77	0.1778	0.1642[a]	5.22E-4	0.0398	-
Fire Pumps (each)	6.10	783.15	70.44	0.2032	0.2228[a]	8.87E-4	0.0857	-
Paved Roads	0.00	-	-	-	1.33E-7	1.06E-9	6.57E-7	-
Unpaved Area	0.00	-	-	-	3.47E-9	7.17E-12	1.79E-9	-
Averaging Period: 3-hours for Normal Operating Conditions								
Aux Boilers (each)	36.58	422.04	15.84	1.6764	-	0.0941	-	-
Night Boilers (each)	36.58	422.04	20.70	0.3810	-	1.17E-3	-	-
Power Block EGs (each)	6.10	769,26	45.64	0.5080	-	1.52E-3	-	-
Common Area EG	6.10	730.37	42.77	0.1778	-	1.74E-4	-	-
Fire Pumps (each)	6.10	783.15	70.44	0.2032	-	2.96E-4	-	-
Paved Roads	0.00	-	-	-	-	1.06E-9	-	-
Unpaved Area	0.00	-	-	-	-	7.17E-12	-	-
Averaging Period: 8-hours for Normal Operating Conditions								
Aux Boilers (each)	36.58	422.04	15.84	1.6764	-	-	0.5645	-
Night Boilers (each)	36.58	422.04	20.70	0.3810	-	-	0.0461	-
Power Block EGs (each)	6.10	769,26	45.64	0.5080	-	-	0.0038	-
Common Area EG	6.10	730.37	42.77	0.1778	-	-	0.0050	-
Fire Pumps (each)	6.10	783.15	70.44	0.2032	-	-	0.0107	-
Paved Roads	0.00	-	-	-	-	-	6.57E-7	-
Unpaved Area	0.00	-	-	-	-	-	1.79E-9	-
Averaging Period: 24-hours for Normal Operating Conditions								
Aux Boilers (each)	36.58	422.04	15.84	1.6764	-	0.0941	-	0.1575
Night Boilers (each)	36.58	422.04	20.70	0.3810	-	1.17E-3	-	6.30E-3
Power Block EGs (each)	6.10	769,26	45.64	0.5080	-	1.90E-4	-	1.26E-3
Common Area EG	6.10	730.37	42.77	0.1778	-	2.17E-5	-	3.64E-4
Fire Pumps (each)	6.10	783.15	70.44	0.2032	-	3.69E-5	-	6.42E-4
WSAC (per cell)	3.66	Ambient+5.56	12.43	2.6924	-	-	-	4.73E-4
Paved Roads	0.00	-	-	-	-	1.06E-9	-	1.01E-7/ 2.79E-8

Table 4.1-19. Stack Parameters and Emission Rates for Refined AERMOD Modeling

Each Emissions Source or Device	Release Height (m)	Stack Temp. (Kelvins)	Exhaust Velocity (m/s)	Stack Diameter (m)	Emission Rates (g/s) or (g/s/m^2)			
					NO_X	SO_2	CO	$PM_{10/2.5}$
Unpaved Area	0.00	-	-	-	-	7.17E-12	-	5.33E-8/ 1.14E-8
Averaging Period: Annual for Normal Operating Conditions								
Aux Boilers (each)	36.58	422.04	15.84	1.6764	0.0948	-	-	0.0432
Night Boilers (each)	36.58	422.04	20.70	0.3810	0.0132	-	-	6.01E-3
Power Block EGs (each)	6.10	769,26	45.64	0.5080	0.0135	-	-	6.88E-4
Common Area EG	6.10	730.37	42.77	0.1778	0.0075	-	-	1.98E-4
Fire Pumps (each)	6.10	783.15	70.44	0.2032	0.0101	-	-	3.50E-4
WSAC (per cell)	3.66	Ambient+5.56	12.43	2.6924	-	-	-	2.16E-4
Paved Roads	0.00	-	-	-	1.33E-7	-	-	1.01E-7/ 2.79E-8
Unpaved Area	0.00	-	-	-	3.47E-9	-	-	5.33E-8/ 1.14E-8

[a]Hourly NOx emissions reflect 30 minutes/hour of testing. All other EG/FP emissions and impacts are based on 60 minutes/hour and 60 minutes/day of testing.

4.1.8.9 Normal Operations Impact Analysis

In order to determine the magnitude and location of the maximum impacts for each pollutant and averaging period, the AERMOD model was used. Table 4.1-20 summarizes maximum modeled concentrations for each criteria pollutant and associated averaging periods when modeling just the traditional point sources (boilers, emergency generators, firepumps, and wet-surface air condensers). Table 4.1-21 summarized the maximum modeled impacts when modeling those sources together with the onsite mobile sources. For these impact analyses, the maximum short-term impacts for all five years are used for comparison to all CO, SO_2, PM10, and PM2.5 standards and the 1-hour NO_2 CAAQS. The maximum 5-year average of the 98th percentile 1-hour NO_2 impacts was used for comparison to the 1-hour NO_2 NAAQS. NO_2 impacts were calculated from modeled NOx impacts using the Ambient Ratio Method (ARM) and USEPA default ratios; namely, multiplying 1-hour NOx impacts by 80% and annual NOx impacts by 75%. In order to assess the significance of the modeled concentrations, the maximum concentrations were modeled and compared to the Class II PSD SILs. All modeled facility pollutant concentrations with the exception of 1-hour NO_2 concentrations are less than the SILs for those pollutants. Maximum combined impacts (modeled plus background) exceed the AAQS only when background concentrations already exceed the applicable standards (in this case, only the PM_{10} 24-hour and annual California AAQS). Facility impacts alone are less than the SILs for PM10, so no significant contribution to background exceedances would be attributed to the proposed facility emissions. The minor impacts of the proposed facility emissions, both with and without onsite mobile source emissions, is demonstrated by the fact that facility impacts are less than the SILs for all pollutants and averaging times other than 1-hour NO_2.

The maximum impacts for NO_2 (1-hour and annual averages), CO (1-hour and 8-hour averages), SO_2 (1-hour, 3-hour, 24-hour, and annual averages), and PM_{10}/$PM_{2.5}$ (24-hour and annual averages) occurred in the immediate vicinity of the facility either on the fence line or within the downwash grid in the 50-meter-spaced receptor areas. Therefore, no additional 50-meter-spaced refined receptor grids in the coarse or intermediate receptor grid areas were required.

Table 4.1-20. Air Quality Impact Summary for Normal Operating Conditions for Facility Impacts without Onsite Mobile Sources

Pollutant	Avg. Period	Modeled Concentration (µg/m^3)	Background (µg/m^3)	Total (µg/m^3)	SIL (µg/m^3)	CAAQS/NAAQS	
						(µg/m^3)	(µg/m^3)
NO_2	1-hr CAAQS	95.9	124.3	220.2	-	339	-
	1-hr NAAQS	81.8	97.8	179.6	7.5	-	188
	Annual	0.37	22.6	22.97	1	57	100
PM_{10}	24-hr	0.26	144.8*	145.1	5	50	150
	Annual	0.02	32.7	32.7	1	20	-
$PM_{2.5}$	24- hr	0.26	15.7	16.0	1.2	-	35
	Annual	0.02	7.8	7.8	0.3	12	15.0
CO	1- hr	41.3	3543	3584	2000	23,000	40,000
	8- hr	2.9	2000	2003	500	10,000	10,000
SO_2	1- hr	1.21	28.6	29.8	7.8	655	196
	3- hr	0.50	28.6	29.1	25	-	1,300
	24- hr	0.14	13.1	13.2	5	105	-

Table 4.1-21. Air Quality Impact Summary for Normal Operating Conditions for Facility Impacts with Onsite Mobile Sources

Pollutant	Avg. Period	Modeled Concentration (µg/m^3)	Background (µg/m^3)	Total (µg/m^3)	SIL (µg/m^3)	CAAQS/NAAQS	
						(µg/m^3)	(µg/m^3)
NO_2	1-hr CAAQS	95.9	124.3	220.2	-	339	-
	1-hr NAAQS	82.0	97.8	179.8	7.5	-	188
	Annual	0.42	22.6	23.0	1	57	100
PM_{10}	24-hr	1.73	144.8*	146.5	5	50	150
	Annual	0.31	32.7	33.0	1	20	-
$PM_{2.5}$	24- hr	0.46	15.7	16.2	1.2	-	35
	Annual	0.07	7.8	7.9	0.3	12	15.0
CO	1- hr	47.5	3543	3590	2000	23,000	40,000
	8- hr	6.0	2000	2006	500	10,000	10,000

SO_2	1- hr	1.21	28.6	29.8	7.8	655	196
	3- hr	0.50	28.6	29.1	25	-	1,300
	24- hr	0.15	13.1	13.3	5	105	-

* First high modeled and maximum background was used.

Facility stacks are too short to be subject to inversion breakup fumigation. Shoreline fumigation impacts were not assessed for the same reason and because the site is not located within three kilometers of a major body of water.

Based on the above modeling results, emissions from the Project will not significantly affect the ambient air quality of the area.

4.1.8.10 Impacts on Soils, Vegetation, and Sensitive Species

Impacts on soils, vegetation, and sensitive species were determined to be “insignificant” for the following reasons:

- No soils, vegetation, or sensitive species were identified in the Project area, which are recognized to have any known sensitivity to the types or amounts of air pollutants expected to be emitted by the facility.
- The facility emissions are expected to be in compliance with all applicable air quality rules and regulations.
- The facility impacts are not predicted to result in violations of existing air quality standards, nor will the emissions cause an exacerbation of an existing violation of any quality standard.

4.1.9 Compliance with Laws, Ordinances, Regulations, and Statutes (LORS)

Table 4.1-22 presents a listing of local, State, and Federal air quality LORS deemed applicable to the Project. Conformance and/or compliance for each identified LORS are noted in the table.

Table 4.1-22. Laws, Ordinances, Regulations, and Standards

Applicable LORS	LORS Requirement Summary	LORS Compliance/Conformance
Federal LORS[1]		
Title 40 CFR, Parts 51 and 52	Prevention of Significant Deterioration for new and modified major stationary sources.	The facility will not be a major stationary source per the PSD regulations. PSD will not apply.
Title 40 CFR, Parts 51 and 52	New Source Review for new and modified major stationary sources.	The facility will be subject to the local air district NSR rules and review process, including but not limited to, BACT determination, offset analysis, air quality impact assessment, etc. See AQMD Rule XIII.
Title 40 CFR, Parts 71-75	Acid Rain program provisions applicable to NOx and SOx emissions compliance, reporting, monitoring, and record keeping.	The AQMD DOC will discuss the final applicability of the Title IV provisions. The facility is not expected to be subject to the Title IV provisions. See AQMD Rule 1210.
Title 40 CFR, Part 70	Federal operating permits requirements.	The Title V application forms are included with the District permitting applications in Appendix 4.1I.
Title 40 CFR, Part 60	New Source Performance Standards (NSPS) Subparts Db, Dc, IIII	The facility will work with SCAQMD staff to assess final NSPS Subpart applicability during the DOC review. The facility will comply with all compliance and operational limits, reporting, and record keeping requirements in the final applicable NSPS. See AQMD Rule IX.
Title 40 CFR, Part 63	National Emissions Standards for Hazardous Air Pollutants (NESHAPs), Subparts (none identified)	The facility will work with SCAQMD staff to assess final NESHAPs Subpart applicability during the DOC review. The facility will comply with all compliance and operational limits, reporting, and record keeping requirements in the final applicable NESHAPs. See AQMD Regulation X.
State LORS[2]		
Air Toxics Hot Spots Program HSC 44300-44384	Requires preparation and submittal of air toxics plans and reports to the AQMD on the District delineated schedule per the HSC provisions.	The facility will comply with all submittals, plans and reports, as required by the SCAQMD upon a determination of program applicability by the AQMD.
CCR 1752, 2300-2309	Requires the CEC decision on the AFC to consider air quality compliance and protection of the environment.	The SCAQMD will issue a DOC prior to the CEC approval of the AFC. The DOC will contain the AQMD's compliance requirements and conditions. The CEC certification and approval will also contain numerous conditions relating to compliance limits, procedures, reporting, monitoring, and record keeping.

17 CCR 93115	ATCM for Stationary CI Engines, established emissions and operational requirements for diesel fueled stationary CI engines.	The emissions and impact sections of the air quality and public health analyses of the AFC establish compliance with the provisions of the ATCM. Also see the BACT determination in Appendix 4.1F.
California Global Warming Solutions Act-2006 (AB 32)	State-wide regulation for measures to reduce GHG emissions by 2020 to 1990 levels.	The facility will comply with all applicable provisions of AB 32 including, but not limited to, GHG emissions reporting, GHG cap-and-trade program, etc.
GHG Performance Standard (SB 1368)	Establishes the GHG emissions performance stds based on emissions of GHG per unit of power output.	The facility processes will comply with the performance standards, as applicable.
Local SCAQMD LORS[3]		
Regulation XIII-NSR	Requires pre-construction review for all proposed new or modified stationary sources. Review includes a BACT determination, mitigation analysis, air quality impact analysis, etc.	The air quality analysis presented in the AFC air section and Appendices 4.1A through 4.1I fulfill the filing and analysis requirements of NSR. The SCAQMD will issue a DOC with conditions insuring compliance with all provisions of the NSR rule.
Regulation XIV-Rule 1401-Toxics NSR	Requires pre-construction review for all proposed new or modified stationary sources emitting toxic pollutants. Establishes risk significance levels and review procedures.	The public health analysis presented in Section 5.15, Public Health and Appendices 4.1A through 4.1I fulfill the filing and analysis requirements of toxics NSR. The SCAQMD will issue a DOC with conditions ensuring compliance with all provisions of the toxics NSR rule.
Regulation XXX-Title V	Implements the provisions of the federal operating permits program and the requirements of the CAA Title V.	The Title V application forms are included with the District permitting applications in Appendix 4.1I.
Regulation XXXI-Acid Rain Permit Program	Implements the provisions of the federal Acid Rain Program. See rule provisions Subpart A-I.	If Title IV is deemed applicable per the AQMD DOC, the DOC will contain conditions insuring compliance with all applicable provisions of 40 CFR 71-75, including but not limited to permit application filing, monitoring, reporting, record keeping, etc.
Rule 401-Visible Emissions	Limits visible emissions from applicable processes to values no darker than Ringelmann #1 for periods greater than 3 minutes in any hour.	SCAQMD DOC will ensure compliance with Rule 401. Use of solar technology and clean fuels will also insure compliance.
Rule 402-Nuisance	Prohibits emissions in quantities that would adversely affect public health, other businesses, or property.	The facility is not expected to use or operate any equipment or process that would have the capability to cause a public nuisance.
Rule 403-Fugitive Dust	Limits fugitive PM emissions from construction and construction related activities.	The SCAQMD DOC conditions coupled with the facility proposed mitigation measures should insure compliance

		with the provisions of Rule 403. See also Appendix 4.1G.
Rule 404-Particulate Matter	Limits PM concentration in exhaust from boilers, heaters, IC engines, etc.	Use of clean fuels and application of BACT in the boilers and IC engines will insure compliance with this rule.
Rule 409-Combustion Contaminants	Limits PM emissions from combustion sources.	Use of clean fuels in the boilers and IC engines will insure compliance with this rule. See Appendix 4.1A.
Rule 429-Nox Exemptions for Startup/Shutdown	Provides NOx emissions exemptions for boiler subject to Rule 1146 for periods of startup and shutdown.	Use of clean fuel in the boilers (natural gas) and application of BACT will insure compliance with this rule.
Rule 431-Sulfur Content of Fuels (431.1-431.3)	Limits the sulfur content of fuels combusted in stationary sources.	Use of clean fuels (natural gas and low sulfur fuel oil) in the boilers and IC engines will insure compliance with this rule. See Appendix 4.1A.
Rule 433-Natural Gas Quality	Applies to all natural gas distribution system operators that convey natural gas to end users within the District.	The provisions of this regulation do not apply to the proposed facility.
Rule 442-Organic Solvents	Limits emissions of VOC from materials or processes using VOC containing products.	Normal operation of the facility is not expected to use amounts of materials that would result in emissions above the prohibitory rule limits.
Rule 463-Storage of Organic Liquids	Limits VOC emissions from the storage and transfer of VOC containing materials.	The facility will only store diesel fuel for the emergency engines, and a small amount of degreasing solvent for the maintenance shop. All such materials will be stored and used in compliance with the rule provisions.
Rule 474-Fuel Burning Equipment-NOx	Limits NOx emissions from non-mobile fuel burning equipment.	Use of clean fuels (natural gas) in the boilers and implementation of BACT for NOx will insure compliance with this rule. This rule does not apply to the emergency engines.
Regulation IX-NSPS	New Source Performance Standards (NSPS) Potentially applicable Subparts: Db, Dc, IIII	The facility will work with SCAQMD staff to assess final NSPS Subpart applicability during the DOC review. The facility will comply with all compliance and operational limits, reporting, and record keeping requirements in the final applicable NSPS.
Rule 1110.2-Gaseous and Liquid Fueled Engines	Limits NOx, VOC, and CO emissions from gaseous and liquid fueled IC engines.	The use of clean liquid fuels (CA LS diesel) in the emergency engines, coupled with low use rates, and certified Tier 4 engines will insure compliance with this rule.
Rule 1121-NOx Control from NG Fired Water Heaters	Limits NOx emissions from natural gas fired residential type water heaters.	The facility control/administration building may have such a heater. This heater will nto exceed the standards set by the rule.

Rule 1146-NOx Emissions from IIC Boilers and Process Heaters	Limits NOx from boilers, steam generators, and heaters rated at greater than 5 mmbtu/hr.	The boilers will comply with the NOX limits, reporting, and compliance plans requirements. The rule limits do not apply during startup and shutdown per Rule 429.
Rule 1171-Solvent Cleaning Operations	Limits VOC, TAC, and SODS emissions from solvent use in cleaning operations activities.	The facility will comply with the rule provisions by purchasing and using approved solvents, in approved manners. The facility may also use non-VOC solvents.
Regulation XIX-Federal Conformity	Implements the General Conformity requirements of 40 CFR Parts 6 and 51.	Due to the attainment/unclassified status of the project region a conformity analysis is not required.
Regulating agencies with respect to Federal LORS are EPA, and the SCAQMD with EPA oversight. In some instances, the SCAQMD has been granted program authority (via rule adoption or MOU) to act in the place of EPA. These instances are noted in the Local LORS. Regulating agencies with respect to State LORS are the SCAQMD with CARB oversight, and the CEC. Regulating agency with respect to Local LORS is the SCAQMD with either CARB and/or EPA oversight. The Determination of Compliance (DOC) issued by the SCAQMD will contain conditions insuring compliance with all adopted air quality related LORS (local rules, federal rules for which the AQMD has authority to implement and enforce, and state rules for which the AQMD has authority to implement and enforce.		

4.1.10 Involved Agencies and Agency Contacts

Table 4.1-23 presents data on the following: (1) air quality agencies that may or will exercise jurisdiction over air quality issues resulting from the proposed power plant, (2) the most appropriate agency contact for the Project, (3) contact address and phone information, and (4) the agency involvement in required permits or approvals.

Table 4.1-23. Agencies, Contacts, Jurisdictional Involvement, Required Permits for Air Quality

Agency	Contact	Jurisdictional Area	Permit Status
California Energy Commission (CEC)	Assigned Project Manager 1516 Ninth Street Sacramento, CA 95814	Primary reviewing and certification agency.	Will certify the facility under the energy siting regulations and CEQA. Certification will contain a variety of conditions pertaining to emissions and operation.
SCAQMD	Mohzen Nazemi Deputy EO 21865 E. Copley Dr. Diamond Bar, CA 91765 (909) 396-2662	Prepares Determination of Compliance (DOC) for CEC, Issues SCAQMD Permit to Construct (PTC) and Permit to Operate (PTO), Primary air regulatory and enforcement agency.	DOC will be prepared subsequent to AFC submittal. The AFC contains the AQMD permitting application forms. The AFC plus these forms will constitute the required AQMD permitting application.
California Air Resources Board (CARB)	Mike Tollstrup Chief, Project Assessment Branch 1001 I Street, 6th Floor Sacramento, CA 95814 (916) 322-6026	Oversight of AQMD stationary source permitting and enforcement program	CARB staff may provide comments on applicable AFC sections affecting air quality and public health. CARB staff will also have opportunity to comment on draft ATC.
Environmental Protection Agency, Region IX	Gerardo Rios Chief, Permits Section USEPA-Region 9 75 Hawthorne Street San Francisco, CA 94105 (415) 947-3974	Oversight of all AQMD programs, including permitting and enforcement programs	USEPA Region 9 staff will receive a copy of the DOC. USEPA Region 9 staff will have opportunity to comment on draft ATC.

4.1.11 Permit Requirements and Permit Schedule

A Permit to Construct (PTC) application is required in accordance with the SCAQMD rules. Appendix 4.1I contains the required SCAQMD permitting application forms. These forms in conjunction with the AFC constitute the required air district permitting application. The SCAQMD will issue a Determination of Compliance (DOC) which is equivalent to a standard PTC. Upon the completion of construction the SCAQMD will issue a PTO in conjunction with the CEC. Table 4.1-24 presents the best estimate of the permitting schedule pertaining to air quality issues.

Table 4.1-24. Air Quality Permitting Schedule

Permit Type	Permit Agency	Schedule for Submittal/Review*
Permit to Construct	SCAQMD	See Appendix 4.1I. AFC is the ATC application per Rule 1306.
Permit to Operate	SCAQMD	Issued by SCAQMD subsequent to the completion of construction, commissioning, and start-up.
Preliminary Determination of Compliance (PDOC)	SCAQMD	Approximately 90 days after AFC submittal.
Final Determination of Compliance (FDOC)	SCAQMD	Approximately 180 days after AFC submittal.
Title IV Acid Rain	SCAQMD/EPA	Not Required.
Title V Operating Permit	SCAQMD	Title V application forms will be submitted as part of the AFC submittal along with the other pertinent District permitting forms.

*all schedule timing values are best estimates.

4.1.12 Public Health

This section presents the methodology and results of a human health risk assessment (HRA) performed to assess potential impacts and public exposure associated with airborne emissions from the routine operation of the Palen Solar Energy Generating System Project (PSEGS or the Project).

Air will be the dominant pathway for public exposure to chemical substances released by the Project. Emissions to the air will consist primarily of combustion by-products produced by the auxiliary boilers, night-time preservation boilers, and the diesel-fired emergency fire pumps and electrical generator engines. Emissions from the Wet SACs as well as fugitive losses from the various support systems will also be assessed. Potential health risks from facility-wide emissions will occur almost entirely by direct inhalation. To be conservative, additional pathways were included in the health risk modeling, *i.e.,* soil ingestion, dermal exposure, mother's milk exposure. However, direct inhalation is considered the most likely exposure pathway. The HRA was conducted in accordance with guidance established by the California Office of Environmental Health Hazard Assessment (OEHHA) and the California Air Resources Board (CARB).

Emissions with established California Ambient Air Quality Standards (CAAQS) or National Ambient Air Quality Standards (NAAQS), including nitrogen oxides (NO_x), carbon monoxide (CO), sulfur oxides (SO_x), and fine particulate matter (PM_{10}/$PM_{2.5}$), are addressed in Section 4.1, Air Quality. However, some discussion of the potential health risks associated with these substances is presented in this section. Human health risks associated with the potential accidental release of stored acutely hazardous materials are discussed in the Hazardous Materials Handling section.

4.1.12.1 Affected Environment

The Project site is located in eastern Riverside County, approximately 37 miles west of Blythe, California. The site lies north of and approximately adjacent to Interstate 10 (I-10) at the Chuckwalla Valley/Corn Springs Road exit. The site is open desert land and is situated in the Chuckwalla Valley. The Palen Mountains lie to the north-northeast, the McCoy Mountains lie to the east. Desert Center,

Ca. lies to the west approximately 9.5 miles. The Chuckwalla Mountains lie to the south and southwest.

The site is situated in census tract 469 (Riverside County). Figure 4.1D-1 (Appendix 4.1D) shows the site and surrounding census tracts. The 2010 Census Data indicates a population value of 2,043 individuals for Tract 469. Presently, it is estimated that less than 200 individuals live within a 6-mile radius of the plant site.

According to the Auer land use classification scheme, a three-kilometer radius boundary around the site yields an overwhelming rural/desert classification. This is consistent with the current land use and zoning designation for the site.

Sensitive receptors are defined as groups of individuals that may be more susceptible to health risks due to chemical exposure. Schools, both public and private, day care facilities, convalescent homes, and hospitals are of particular concern. There were no sensitive receptors identified within a 6-mile radius of the site. Several residential and worker receptors were identified within the regional area of the Project site and are listed in Table 4.1-25.

Table 4.1-25. Residential and Worker Receptors Within the Regional Area of the Project

Receptor ID	Receptor Type	UTM Coordinates (E/N), m	Elevation, Ft (amsl)
Res1	Residential	663279, 3731200	547
Res2	Residential	671277, 3731139	608
Res3	Residential	662726, 3731944	531
Res4	Residential	660412, 3729285	743
Wrk1	Worker	656712, 3729799	801
Wrk2	Worker	656391, 3729993	792
Wrk3	Worker	655577, 3736169	523
Wrk4	Worker (Airport)	654590, 3736110	541
Wrk5	Worker (Radio Tower)	662419, 3728213	718
Wrk6	Worker (Radio Tower)	662353, 3728203	725
Wrk7	Worker (Radio Tower)	662364, 3728143	727
Wrk8	Worker	662276, 3728405	716

All coordinates from Google Earth (center location of each receptor location).

Based on a 6-mile radius area search. The nearest school is located approximately 10 miles west of the site.

Air quality and health risk data presented by CARB in the 2009 Almanac of Emissions and Air Quality for the State shows that over the period from 1990 through 2008, the average concentrations for the top 10 toxic air contaminants (TACs) have been substantially reduced, and the associated health risks for the State are showing a steady downward trend as well. This same trend is expected to have occurred in the South Coast Air Basin (SCAB). CARB-estimated emissions inventory values for the top 10 TACs for 2008 are presented in Table 4.1-26 for the air basin and the State. The Applicant has not identified, nor is the Applicant aware of, any public health studies prepared by the local health department or the air district, related to respiratory illnesses, cancers, or related diseases concerning the local area within a six-mile radius of the proposed Project site.

Table 4.1-26. Top Ten Toxic Air Contaminants

TAC	Statewide Year 2008 Emissions (tons/yr)	SCAB Year 2008 Emissions (tons/yr)	SCAB Predicted Cancer Risk, per 10^6
Acetaldehyde	9103	2022	5
Benzene	10794	3006	44
1,3 Butadiene	3754	673	54
Carbon tetrachloride	4.04	1	ND
Chromium 6	0.61	0	16
Para-Dichlorobenzene	1508	637	ND
Formaldehyde	20951	4923	26
Methylene Chloride	6436	3516	2
Perchloroethylene	4982	2151	2
Diesel Particulate Matter	35884	8300	ND

ND = no data

4.1.12.2 Environmental Consequences

4.1.12.2.1 Significance Criteria

Cancer Risk

Cancer risk is the probability or chance of contracting cancer over a human life span (assumed to be 70 years). Carcinogens are not assumed to have a threshold below which there would be no human health impact. In other words, any exposure to a carcinogen is assumed to have some probability of causing cancer; the lower the exposure, the lower the cancer risk (*i.e.*, a linear, no-threshold model). Under various state and local regulations, an incremental cancer risk greater than 10 in a million due to a project is considered to be a significant impact on public health. For example, the 10 in a million risk level is used by the Air Toxics Hot Spots (California Health and Safety Code [CHSC] 44300 et seq.) program and California's Proposition 65 as the public notification level for air toxic emissions from existing sources.

Non-Cancer Risk

Non-cancer health effects can be classified as either chronic or acute. In determining the potential health risks of non-cancerous air toxics, it is assumed there is a dose of the chemical of concern below which there would be no impact on human health. The air concentration corresponding to this dose is called the Reference Exposure Level (REL). Non-cancer health risks are measured in terms of a hazard quotient, which is the calculated exposure of each contaminant divided by its REL. Hazard quotients for pollutants affecting the same target organ are typically summed with the resulting totals expressed as hazard indices for each organ system. A hazard index of less than 1.0 is considered to be an insignificant health risk. For this HRA, all hazard quotients were summed regardless of target organ. This method leads to a conservative, upper-bound assessment. RELs used in the hazard index calculations were those published in the CARB/OEHHA listings dated May 2012 (see Appendix 4.1D).

Chronic toxicity is defined as adverse health effects from prolonged chemical exposure, caused by chemicals accumulating in the body, i.e. typically over a lifetime of seventy years. Because chemical accumulation to toxic levels typically occurs slowly, symptoms of chronic effects usually do not appear until long after exposure commences. The lowest no-effect chronic exposure level for a

non-carcinogenic air toxic is the chronic REL. Below this threshold, the body is capable of eliminating or detoxifying the chemical rapidly enough to prevent its accumulation. The chronic hazard index was calculated using the hazard quotients calculated with annual concentrations.

Acute toxicity is defined as adverse health effects caused by a brief chemical exposure over periods ranging from 1 to 8 hours. For most chemicals, the air concentration required to produce acute effects is higher than the level required to produce chronic effects because the exposure duration is shorter. Because acute toxicity is predominantly manifested in the upper respiratory system at threshold exposures, all hazard quotients are typically summed to calculate the acute hazard index. Average short-term modeled concentrations are divided by acute RELs to obtain a hazard index for health effects caused by relatively high, short-term exposure to air toxics.

4.1.12.3 Construction Phase Impacts

The construction phase of the Project is expected to take approximately 33 months. No significant public health effects are expected during the construction phase. Strict construction practices that incorporate safety and compliance with applicable Laws, Ordinances, Regulations, and Standards (LORS) will be followed. In addition, mitigation measures to reduce air emissions from construction impacts will be implemented as described in Section 4.1, Air Quality.

Temporary emissions from construction-related activities are discussed in Appendix 4.1E. Ambient air modeling for particulate matter less than 10 microns in aerodynamic diameter (PM_{10}), CO, sulfur dioxide (SO_2), and NO_x was performed as described in Section 4.1. Construction-related emissions are temporary and localized, resulting in no long-term impacts to the public.

Small quantities of hazardous waste may be generated during the construction phase of the Project. Hazardous waste management plans will be in place so the potential for public exposure is minimal. Refer to the Waste Management section, for more information. No acutely hazardous materials (AHMs) will be used or stored on-site during construction (see the Hazardous Materials Handling section). To ensure worker safety during construction, safe work practices will be followed (see Worker Safety section).

4.1.12.4 Operational Phase Impacts

Environmental consequences potentially associated with the operation of the Project are potential human exposure to chemical substances emitted to the air. The human health risks potentially associated with these chemical substances were evaluated in a HRA. The chemical substances potentially emitted to the air from the proposed Project boilers, diesel engines, wet SACs, and other miscellaneous support systems are listed in Table 4.1-27.

Table 4.1-27 Chemical Substances Potentially Emitted to the Air From the Project

Criteria Pollutants	Noncriteria Pollutants (Toxic Pollutants)	
Particulate Matter Carbon Monoxide Sulfur Oxides Nitrogen Oxides Volatile Organic Compounds Lead	Diesel Particulate Matter Acetaldehyde Acrolein Benzene 1-3 Butadiene Ethylbenzene Formaldehyde Hexane Naphthalene PAHs Propylene Propylene Oxide	Toluene Xylene Arsenic Cadmium Chromium Copper Nickel Manganese Selenium Mercury Zinc Biphenyl

Emissions of criteria pollutants will adhere to NAAQS and CAAQS as discussed in Section 4.1, Air Quality. The Project will also include emission control technologies necessary to meet the required emission standards specified for criteria pollutants under SCAQMD rules. Offsets will be required even though the Project will not be a major source. Finally, air dispersion modeling results (presented in Section 4.1) show emissions will not result in concentrations of criteria pollutants in air that exceed ambient air quality standards (either NAAQS or CAAQS). These standards are intended to protect the general public with a wide margin of safety. Therefore, the Project is not anticipated to have a significant impact on public health from emissions of criteria pollutants.

Potential impacts associated with emissions of toxic pollutants to the air from the proposed Project were addressed in a HRA, presented in Appendix 4.1D. The HRA was prepared using guidelines developed by OEHHA and CARB, as implemented in the latest version of the Hotspots Analysis and Reporting Program (HARP) model (Version 1.4f).

4.1.12.5 Public Health Impact Study Methods

Emissions of toxic pollutants potentially associated with the Project were estimated using emission factors approved by CARB and the U.S. Environmental Protection Agency (EPA). Concentrations of these pollutants in air potentially associated with Project emissions were estimated using the HARP dispersion modeling module. Modeling allows the estimation of both short-term and long-term average concentrations in air for use in a HRA, accounting for site-specific terrain and meteorological conditions. Health risks potentially associated with the estimated concentrations of pollutants in air were characterized in terms of excess lifetime cancer risks (for carcinogenic substances), or comparison with reference exposure levels for non-cancer health effects (for non-carcinogenic substances).

Health risks were evaluated for a hypothetical maximum exposed individual (MEI) located at the maximum impact receptor (MIR). The hypothetical MEI is an individual assumed to be located at the MIR location, which is assumed (for purposes of this worst-case analysis) to be a residential receptor where the highest concentrations of air pollutants associated with Project emissions are predicted to occur, based on the air dispersion modeling. Human health risks associated with emissions from the

proposed Project are unlikely to be higher at any other location than at the location of the MIR. If there is no significant impact associated with concentrations in air at the MIR location, it is unlikely that there would be significant impacts in any location in the vicinity of the Project. The highest off-site concentration location represents the MIR/MEI.

Health risks potentially associated with concentrations of carcinogenic air pollutants were calculated as estimated excess lifetime cancer risks. The excess lifetime cancer risk for a pollutant is estimated as the product of the concentration in air and a unit risk value. The unit risk value is defined as the estimated probability of a person contracting cancer as a result of constant exposure to an ambient concentration of 1 microgram per cubic meter ($\mu g/m^3$) over a 70-year lifetime. In other words, it represents the increased cancer risk associated with continuous exposure to a concentration in air over a 70-year lifetime. Evaluation of potential non-cancer health effects from exposure to short-term and long-term concentrations in air was performed by comparing modeled concentrations in air with the RELs. A REL is a concentration in air at or below which no adverse health effects are anticipated. RELs are based on the most sensitive adverse effects reported in the medical and toxicological literature. Potential non-cancer effects were evaluated by calculating a ratio of the modeled concentration in air and the REL. This ratio is referred to as a hazard quotient. The unit risk values and RELs used to characterize health risks associated with modeled concentrations in air were obtained from the *Consolidated Table of OEHHA/ARB Approved Risk Assessment Health Values* (CARB, 2012), and are presented in Appendix 4.1D. Emissions of toxic and/or hazardous pollutants for the various processes are presented in Appendix 4.1A.

4.1.12.6 Characterization of Risks from Toxic Air Pollutants

The excess lifetime cancer risk associated with concentrations in air estimated for the Project MIR location is estimated to be 4.03×10^{-6}. Excess lifetime cancer risks less than 10×10^{-6} (with T-BACT) are unlikely to represent significant public health impacts that require additional controls of facility emissions. Risks higher than 1×10^{-6} may or may not be of concern, depending upon several factors. These include the conservatism of assumptions used in risk estimation, size of the potentially exposed population, and toxicity of the risk-driving chemicals. Health effects risk thresholds are listed in Table 4.1-28. Risks associated with pollutants potentially emitted from the Project are presented in Table 4.1-29. Further description of the methodology used to calculate health risks associated with emissions to the air is presented in Appendix 4.1D. As described previously, human health risks associated with emissions from the proposed Project are unlikely to be higher at any other location than at the location of the MIR. If there is no significant impact associated with concentrations in air at the MIR location, it is unlikely there would be significant impacts in any other location in the vicinity of the Project.

Table 4.1-28. Significant Health Effect Threshold Levels for SCAQMD

Risk Category	Risk Threshold
Cancer Risk	$>1.0 \times 10^{-6}$ without TBACT $>10 \times 10^{-6}$ with TBACT
Chronic Hazard Index	>1.0
Acute Hazard Index	>1.0
Cancer Burden	>0.5

Per Rule 1401 SCAQMD

Table 4.1-29. Project HRA Summary

	Facility (Boilers, Engines, Wet SACs)	
Risk Category	**MIR Project Values**	**Applicable Significance Threshold**
Cancer Risk	4.03 E-06	See Table 4.1-28
Chronic Hazard Index	0.00253	
Acute Hazard Index	0.000108	
Cancer Burden[1]	0.0	
MIR Receptor #: 353, 664307mE, 3728120mN		

* No acute REL has been established for diesel PM.

[1] The 1 x 10E-6 isopleth radius is located ~6,000 ft. from the site center. There are no populated areas within this radius; therefore the cancer burden is 0.0.

Cancer risks potentially associated with facility emissions were also assessed in terms of cancer burden. Cancer burden is a hypothetical upper-bound estimate of the additional number of cancer cases that could be associated with emissions from the Project. Cancer burden is calculated as the worst-case product of excess lifetime cancer risk (at the 1×10^{-6} cancer risk level and isopleth distance) and the number of individuals at that risk level. The 1×10^{-6} isopleth radius occurs at approximately 6000 feet from the grid center. At this distance, there are no impacted populations. The calculated cancer burden for the Project is therefore 0.

As described previously, human health risks associated with emissions from the Project are unlikely to be higher at any other location than at the location of the MIR. Therefore, the risks for all of these individuals would be lower (and in most cases, substantially lower) than 4.03×10^{-6}. The estimated cancer burden was 0.0, indicating emissions from the Project would not be associated with any increase in cancer cases in the previously defined population. As stated previously, the methods used in this calculation considerably overstate the potential cancer burden, further suggesting that Project emissions are unlikely to represent a significant public health impact in terms of cancer risk.

The acute and chronic non-cancer hazard quotients associated with concentrations in air are shown in Table 4.1-29. The acute and chronic non-cancer hazard quotients for all target organs fall well below 1.0. As described previously, a hazard quotient less than 1.0 is unlikely to represent significant impact to public health. Further description of the methodology used to calculate health risks associated with emissions to the air is presented in Appendix 4.1D. As described previously, human health risks associated with emissions from the proposed Project are unlikely to be higher at any other location than at the location of the MIR. If there is no significant impact associated with concentrations in air at the MIR location, it is unlikely there would be significant impacts in any other location in the vicinity of the Project.

Detailed risk and hazard values are provided in the HARP output presented in Appendix 4.1D (electronic files on CD). No specific health related studies were identified which pertain to the local Project area for any identified toxic air pollutant or identified specific population. The various MATES studies prepared by the SCAQMD are targeted at the major district urban areas, not the eastern desert regions where the project is located.

The estimates of excess lifetime cancer risks and non-cancer risks associated with chronic or acute exposures fall below thresholds used for regulating emissions of toxic pollutants to the air.

Historically, exposure to any level of a carcinogen has been considered to have a finite risk of inducing cancer. In other words, there is no threshold for carcinogenicity. Since risks at low levels of exposure cannot be quantified directly by either animal or epidemiological studies, mathematical models have estimated such risks by extrapolation from high to low doses. This modeling procedure is designed to provide a highly conservative estimate of cancer risks based on the most sensitive species of laboratory animal for extrapolation to humans. In other words, the assumption is that humans are as sensitive as the most sensitive animal species. Therefore, the true risk is not likely to be higher than risks estimated using unit risk factors and is most likely lower, and could even be zero.

An excess lifetime cancer risk of 1×10^{-6} is typically used as a screening threshold of significance for potential exposure to carcinogenic substances in air. The excess cancer risk level of 1×10^{-6}, which has historically been judged to be an acceptable risk, originates from efforts by the Food and Drug Administration (FDA) to use quantitative HRA for regulating carcinogens in food additives in light of the zero tolerance provision of the Delany Amendment (Hutt, 1985). The associated dose, known as a “virtually safe dose,” has become a standard used by many policy makers and the lay public for evaluating cancer risks. However, a study of regulatory actions pertaining to carcinogens found that an acceptable risk level can often be determined on a case-by-case basis. This analysis of 132 regulatory decisions found that regulatory action was not taken to control estimated risks below 1×10^{-6} (one in a million), which are called de minimis risks. De minimis risks are historically considered risks of no regulatory concern. Chemical exposures with risks above 4×10^{-3} (four in ten thousand), called “de manifestis” risks, were consistently regulated. “De manifestis” risks are typically risks of regulatory concern. The risks falling between these two extremes were regulated in some cases, but not in others (Travis et al, 1987).

The estimated lifetime cancer risks to the maximally exposed individual located at the Project MIR are well below the 10×10^{-6} significance level (with T-BACT). These risk estimates were calculated using assumptions that are highly health conservative. Evaluation of the risks associated with the Project emissions should consider that the conservatism in the assumptions and methods used in risk estimation considerably overstate the risks from Project emissions. Based on the results of this HRA, there are no significant public health impacts anticipated from emissions of toxic pollutant to the air from the Project.

4.1.12.7 Hazardous Materials

Hazardous materials will be used and stored at the Project site. The hazardous materials stored in significant quantities on-site and descriptions of their uses are presented in the Hazardous Materials section. Use of chemicals at the Project will be in accordance with standard practices for storage and management of hazardous materials. Normal use of hazardous materials, therefore, will not pose significant impacts to public health. While mitigation measures will be in place to prevent releases, accidental releases that migrate off-site could result in potential impacts to the public.

The California Accidental Release Program regulations (CalARP) and Code of Federal Regulations (CFR) Title 40 Part 68 under the Clean Air Act (CAA) establish emergency response planning requirements for acutely hazardous materials. These regulations require preparation of a Risk Management Plan (RMP), which is a comprehensive program to identify hazards and predict the areas that may be affected by a release of a program listed hazardous material.

4.1.12.8 Operation Odors

The Project is not expected to emit any substances that could cause odors.

4.1.12.9 Electromagnetic Field Exposure

Because the electric transmission line (required for the project interconnect) does not travel through residential areas, and based on recent findings of the National Institute of Environmental Health Sciences (NIEHS, 1999), electromagnetic field (EMF) exposures are not expected to result in a significant impact on public health. The NIEHS report to the U.S. Congress found “the probability that EMF exposure is truly a health hazard is currently small. The weak epidemiological associations and lack of any laboratory support for these associations provide only marginal scientific support that exposure to this agent is causing any degree of harm” (NIEHS, 1999).

4.1.12.10 Legionella

In addition to being a source of potential toxic air contaminants, the possibility exists for bacterial growth to occur in the cooling towers and similar processes, including Legionella. Legionella is a bacterium that is ubiquitous in natural aquatic environments and is also widely distributed in man-made water systems. It is the principal cause of legionellosis, otherwise known as Legionnaires’ disease, which is similar to pneumonia. Transmission to people results mainly from inhalation or aspiration of aerosolized contaminated water. Untreated or inadequately treated cooling systems, such as industrial cooling towers and building heating, ventilating, and air conditioning systems, have been correlated with outbreaks of legionellosis.

Legionella can grow symbiotically with other bacteria and can infect protozoan hosts. This provides Legionella with protection from adverse environmental conditions, including making it more resistant to water treatment with chlorine, biocides, and other disinfectants. Thus, if not properly maintained, cooling water systems and their components can amplify and disseminate aerosols containing Legionella.

The State of California regulates recycled water for use in cooling towers in Title 22, Section 60303, California Code of Regulations. This section requires that, in order to protect workers and the public who may come into contact with cooling tower mists, chlorine or another biocide must be used to treat the cooling system water to minimize the growth of Legionella and other micro-organisms. This regulation does not, at this time, apply to the Project since it intends to use well water (not reclaimed water) for cooling purposes.

The EPA published an extensive review of Legionella in a human health criteria document. In 1999, the EPA noted Legionella may propagate in biofilms (collections of microorganisms surrounded by slime they secrete, attached to either inert or living surfaces) and aerosol-generating systems such as cooling towers can aid in the transmission of Legionella from water to air. The EPA has inadequate quantitative data on the infectivity of Legionella in humans to prepare a dose-response evaluation. Therefore, sufficient information is not available to support a quantitative characterization of the threshold infective dose of Legionella. Thus, the presence of even small numbers of Legionella bacteria presents a risk, however small, of disease in humans.

In 2000, the Cooling Tower Institute (CTI) issued its own report and guidelines for the best practices for control of Legionella. The CTI found that 40 to 60 percent of industrial cooling towers tested were found to contain Legionella. To minimize the risk from Legionella, the CTI noted that consensus recommendations included minimization of water stagnation, minimization of process leads into the cooling system that provide nutrients for bacteria, maintenance of overall system cleanliness, application of scale and corrosion inhibitors as appropriate, use of high-efficiency mist eliminators on cooling towers, and overall general control of microbiological populations. Good preventive maintenance is very important in the efficient operation of cooling towers and other evaporative

equipment. Preventive maintenance includes having effective drift eliminators, periodically cleaning the system if appropriate, maintaining mechanical components in working order, and maintaining an effective water treatment program with appropriate biocide concentrations. The efficacy of any biocide in ensuring that bacteria, and in particular Legionella growth, is kept to a minimum is contingent upon a number of factors including, but not limited to, proper dosage amounts, appropriate application procedures, and effective monitoring.

In order to ensure Legionella growth is kept to a minimum, thereby protecting both nearby workers as well as members of the public, an appropriate biocide program and anti-biofilm agent monitoring program would be prepared and implemented for this project. These programs would ensure proper levels of biocide and other agents are maintained within the wet SAC water at all times, periodic measurements of Legionella levels are conducted, and periodic cleaning is conducted to remove bio-film buildup. These mitigation measures would reduce the chances of Legionella growing and dispersing to insignificant (RSA, 2008).

4.1.12.11 Summary of Impacts

Results from the air toxics HRA based on emissions modeling indicate there will be no significant incremental public health risks from construction or operation of the Project. Results from criteria pollutant modeling for routine operations indicate potential ambient concentrations of NO_2, CO, SO_2, and PM_{10} will not significantly impact air quality (see Section 4.1). Potential concentrations are below the Federal and California standards established to protect public health, including the more sensitive members of the population.

4.1.12.12 Cumulative Impacts

The HRA for the Project indicates the maximum cancer risk will be approximately 4.03×10^{-6}, versus the SCAQMD significance threshold of >10 in one million at the point of maximum exposure to air toxics from power plant emissions utilizing TBACT. This risk level is considered to be insignificant. Non-cancer chronic and acute effects will also be less than significant. A cumulative risk impact analysis is not proposed at this time because of the following:

- Low project operational emissions levels of air toxic substances.
- Insignificant risk resulting from project operations.
- Lack of an established background or baseline risk value for the Project impact area. The toxics monitoring data compiled by CARB is designed to provide air quality data in support of general population exposures. The data do not provide information on localized impacts, often referred to as near-source or neighborhood exposures.
- The CARB toxics air contaminant monitoring network does not include any monitoring sites within the project impact region, *i.e.,* the sites currently operating in the most recent 3 to 5 period are confined to the major urban areas. The closest monitoring sites would be those located in the South Coast AQMD (Los Angeles urban area). These sites would not represent ambient concentrations of toxic substances in remote desert areas such as the Project site.
- CEC staff indicates, based on their review of numerous modeling studies, that unless a significantly sized source of HAPs is located within 0.5 miles of the proposed new source, it is highly unlikely that the cumulative emissions of the sources will result in any significant health related impacts. There are no significant sources (existing or proposed) of HAPs within 0.5 miles

of the project site, therefore a cumulative analysis of health risk impacts is not warranted at this time.

4.1.12.13 Mitigation Measures

4.1.12.13.1 Criteria Pollutants

Emissions of criteria pollutants will be minimized by applying Best Available Control Technology (BACT) to the Project. BACT for the boilers, fire pumps, emergency generator engines, and wet SACs is delineated in Appendix 4.1F.

The proposed Project location is in an area designated by the federal air agencies as unclassified/attainment for ozone and PM2.5, and unclassified for PM10. Pursuant to SCAQMD New Source Review (NSR) Rule, offsets are required for the Project for NOx only (see Appendix 4.1G for details on the NOx mitigation strategy). Therefore, further mitigation of emissions is not required to protect public health.

4.1.12.13.2 Toxic Pollutants

Emissions of toxic pollutants to the air will be minimized through the use of T-BACT at the proposed Project. Emissions from tanks storing liquid organic chemicals will be minimized through the use of one or a combination of the following:

- Use of small-capacity, fixed roof tanks
- Use of low vapor pressure organic substances
- Use of exempt compounds
- Use of vapor balance and/or vapor recovery systems on a case-by-case basis as deemed appropriate

Legionella Mitigation Measure: The proposed Project will develop and implement a wet SAC treatment plan to ensure the potential for bacterial growth in cooling water is kept to a minimum. The treatment plan will be consistent with the Cooling Technology Institute's "Best Practices for Control of Legionella" guidelines and will include periodic sampling and testing for the presence of Legionella bacteria in the cooling tower water (RSA, 2008).

4.1.12.14 Hazardous Materials

Mitigation measures for hazardous materials are presented below and discussed in more detail in the Hazardous Materials section. Potential public health impacts from the use of hazardous materials are only expected to occur as a result of an accidental release. The plant has many safety features designed to prevent and minimize impacts from the use and accidental release of hazardous materials. The Project site will include the following design features:

- Curbs, berms, and/or secondary containment structures will be provided where accidental release of chemicals may occur.
- A fire-protection system will be included to detect, alarm, and suppress a fire, in accordance with applicable LORS.
- Construction of all storage systems will be in accordance with applicable construction standards and LORS.

If required, a RMP for the Project will be prepared prior to commencement of Project operations. The RMP will estimate the risk presented by handling affected materials at the Project site. The RMP will include a hazard analysis, off-site consequence analysis, seismic assessment, emergency response plan, and training procedures. The RMP process will accurately identify and propose adequate mitigation measures to reduce the risk to the lowest possible level.

A safety program will be implemented and will include safety training programs for contractors and operations personnel, including instructions on: (1) the proper use of personal protective equipment (PPE), (2) safety operating procedures, (3) fire safety, and (4) emergency response actions. The safety program will also include programs on safely operating and maintaining systems that use hazardous materials. Emergency procedures for Project personnel include power plant evacuation, hazardous material spill cleanup, fire prevention, and emergency response.

Areas subject to potential leaks of hazardous materials will be paved and bermed. Incompatible materials will be stored in separate containment areas. Containment areas will be drained to either a collection sump or holding or neutralization tanks. Also, piping and tanks exposed to potential traffic hazards will be additionally protected by traffic barriers.

The facility will consult with its legal counsel on issues surrounding Proposition 65, and will comply with all signage, notifications, and reporting requirements per the statute requirements during construction and operation.

4.1.12.15 Laws, Ordinances, Regulations, and Standards (LORS)

An overview of the regulatory process for public health issues is presented in this section. The relevant LORS that affect public health and are applicable to the Project are identified in Table 4.1-30. The conformity of the Project to each of the LORS applicable to public health is also presented in this table. Table 4.1-30 summarizes the primary agencies responsible for public health, as well as the general category of the public health concern regulated by each of these agencies.

Table 4.1-30. Laws, Ordinances, Regulations, and Standards for Public Health

LORS	Public Health Concern	Primary Regulatory Agency	Project Conformance
Federal Clean Air Act Title III	Public exposure to air pollutants	USEPA Region 9 CARB SCAQMD	Based on results of HRA as per CARB/OEHHA guidelines, toxic contaminants do not exceed acceptable levels. Emissions of criteria pollutants will be minimized by applying BACT to the Project. Minor increases in emissions of criteria pollutants are not required to be offset. Section 4.1.12 and Appendices 4.1A and 4.1D.
Health and Safety Code 25249.5 et seq. (Safe Drinking Water and Toxic Enforcement Act of 1986—Proposition 65)	Public exposure to chemicals known to cause cancer or reproductive toxicity	OEHHA	Based on results of HRA as per CARB/OEHHA guidelines, toxic contaminants do not exceed thresholds that require exposure warnings. Section 4.1.12 and Appendices 4.1A and 4.1D.

Table 4.1-30. Laws, Ordinances, Regulations, and Standards for Public Health

LORS	Public Health Concern	Primary Regulatory Agency	Project Conformance
40 CFR Part 68 (Risk Management Plan) and CalARP Program Title 19	Public exposure to acutely hazardous materials	USEPA Region 9 Riverside County Department of Health Services Riverside County Fire Department	A vulnerability analysis will be performed to assess potential risks from a spill or rupture from any affected storage tank. A RMP (if required) will be prepared prior to commencement of Project operations. Section 4.1.12 and Appendices 4.1A and 4.1D.
Health and Safety Code Sections 25531 to 25541	Public exposure to acutely hazardous materials	Riverside County Department of Health Services CARB SCAQMD	A vulnerability analysis will be performed to assess potential risks from a spill or rupture from any affected storage tank. Section 4.1.12 and Appendices 4.1A and 4.1D.
CHSC 25500-25542	Hazmat Inventory	State Office of Emergency Services and Riverside County Department of Environmental Health	Prepare all required HazMat plans and inventories, distribute to affected agencies. See Hazardous Materials section.
CHSC 44300 et seq.	Air Toxics Hot Spots Program	SCAQMD	Participate in the inventory and reporting program at the District level. Section 4.1.12 and Appendices 4.1A and 4.1D.
SCAQMD Rule 1401	Toxics NSR	SCAQMD	Application of BACT and T-BACT, preparation of HRA. Section 4.1.12 and Appendices 4.1A, 4.1D, and 4.1F.
CHSC 25249.5	Proposition 65	OEHHA	Comply with all signage and notification requirements. See Hazardous Materials section.
Health and Safety Code Sections 44360 to 44366 (Air Toxics “Hot Spots” Information and Assessment Act—AB 2588)	Public exposure to toxic air contaminants	CARB SCAQMD	Based on results of HRA as per CARB/OEHHA guidelines, toxic contaminants do not exceed acceptable levels. Section 4.1.12 and Appendices 4.1A and 4.1D.

4.1.12.16 Permits Required and Schedule

Agency-required permits or submittals related to public health include the SCAQMD Permit to Construct/Permit to Operate, and potentially a Risk Management Plan. These requirements are discussed in detail in Sections 4.1 (Air Quality), and the Hazardous Materials Handling section respectively. The estimated permit schedule is presented in Section 4.1.

4.1.12.17 Involved Agencies and Agency Contacts

Table 4.1-31 provides contact information for agencies involved with Public Health.

Table 4.1-31. Summary of Agency Contacts for Public Health

Public Health Concern	Primary Regulatory Agency	Regulatory Contact
Public exposure to hazardous or toxic air pollutants	EPA Region 9	Gerardo Rios Chief, Permits Section EPA-Region 9 75 Hawthorne Street San Francisco, CA 94105 (415) 947-3974
	CARB	Mike Tollstrup 1001 1 Street, 19th Floor Sacramento, CA 95814 (916) 322-6026
	SCAQMD	Tom Chico Planning-Rule Development 21865 E. Copley Dr. Diamond Bar, CA. 91765 (909) 396-3149
Public exposure to chemicals known to cause cancer or reproductive toxicity	OEHHA	Cynthia Oshita or Susan Long P.O. Box 4010 Sacramento, CA 95812-4010 (916) 445-6900
Public exposure to acutely hazardous materials	EPA Region 9	Gerardo Rios Chief, Permits Section EPA-Region 9 75 Hawthorne Street San Francisco, CA 94105 (415) 947-3974
	Riverside County EH Dept. Hazmat Division Indio Office	Jim Ray 47-950 Arabia Street, Suite A Indio, CA 92201 (760) 863-8976

4.1.13 Air Quality Section References

Air and Waste Management Association (AWMA), 2002. Technical Paper #42752. July.

California Air Resources Board (CARB), 1999. Guidance for Power Plant Siting and Best Available Control Technology, PAB-SSD. July.

California Air Resources Board (CARB), 2009a. Best Available Control Technology Clearinghouse Program, http://www.arb.ca.gov/bact/bact.htm. August.

California Air Resources Board (CARB), 2012. California Air Quality Data Statistics, ADAM Database, http://www.arb.ca.gov/adam, Air Quality Data Branch, Sacramento, California. December.

California Air Resources Board (CARB), 2009c. The 2009 California Almanac of Emissions and Air Quality. CARB, Technical Support Division.

California Energy Commission (CEC), 2012. Energy Facilities Siting/Licensing Process Web Site. http://www.energy.ca.gov/sitingcases/index.html.

Geocommunity website, 2009. Digital Elevation Model (DEM) and Digital Raster Graphics (DRG) files purchased for local and surrounding 7.5' USGS quads, 1:100,000 scale USGS Metric maps, and 1:250,000 USGS maps. http://data.geocomm.com.

Lee and Atkinson, 1992. Procedures for Substituting Values for Missing NWS Meteorological Data for Use in Regulatory Air Quality Models, Office of Air Quality Planning and Standards, Research Triangle Park, North Carolina 27711. July.

Midwest Research Institute, 1996. Improvement of Specific Emission Factors (BACM Project No. 1), Final Report. Prepared by Midwest Research Institute for South Coast AQMD. March.

South Coast Air Quality Management District (SCAQMD), 1993. CEQA Air Quality Handbook. 11/93.

South Coast Air Quality Management District (SCAQMD) website, January 2013. http://www.SCAQMD.ca.gov/.

Nappo et. Al., 1982. Workshop on the Representativeness of Meteorological Observations, 1982,

National Climatic Data Center (NCDC), 2009. NCDC Climate Data Online (CDO) purchased for Blythe Airport surface data in 3505 format. http://cdo.ncdc.noaa.gov/CDO/cdo.

NationalClimatic Data Center (NCDC), 2009. California Climate data — Normals, Means, and Extremes for the Blythe Station #040519.

National Oceanic and Atmospheric Administration (NOAA), Earth System Research Laboratory, 2009. Radiosonde Database Access for Tucson, AZ. http://raob.fsl.noaa.gov.

Palen Solar Power Project, Application for Certification, Air Quality Section 5.2, August 2009.

U.S. Department of Agriculture Forest Service, 2002. USDA Forest Service Class I Area Information. http://www.fs.fed.us/r6/aq/natarm/r5/. August.

U.S. Environmental Protection Agency (EPA), 1985. Guideline for Determination of Good Engineering Stack Height (Technical Support Document for the Stack Height Regulation) (Revised), USEPA-450/4-80-023R. Office of Air Quality Planning and Standards, Research Triangle Park, North Carolina 27711. June.

U.S. Environmental Protection Agency (EPA), 1991. Nonroad Engine and Vehicle Emission Study Report, 21A-2001, Office of Mobile Sources, Washington, D.C. 20460. November.

U.S. Environmental Protection Agency (EPA), 1992. Workbook for Plume Visual Impact Screening and Analysis (Revised), USEPA-454/R-92-023, Office of Air and Radiation, Office of Air Quality Planning and Standards, Research Triangle Park, North Carolina 27711. October.

U.S. Environmental Protection Agency (EPA), 1995a. Compilation of Air Pollution Emission Factors, Volume I, Fifth Edition; AP-42.

U.S. Environmental Protection Agency (EPA), 1995b. On-Site Meteorological Program Guidance for Regulatory Model Applications, USEPA-450/4-87-013, August.

U.S. Environmental Protection Agency (EPA), 1995c. User's Guide to the Building Profile Input Program (Revised), USEPA-454/R-93-038, Office of Air Quality Planning and Standards, Research Triangle Park, North Carolina 27711. February.

U.S. Environmental Protection Agency (EPA), 2004a. User's Guide for the AERMOD Model, USEPA-454/B-03-001, Office of Air Quality Planning and Standards, Research Triangle Park, North Carolina 27711. September. With October 2004 and December 2006 Addendums.

U.S. Environmental Protection Agency (EPA), 2004b. User's Guide for the AERMOD Terrain Preprocessor (AERMAP), EPA-454/B-03-003, Office of Air Quality Planning and Standards, Research Triangle Park, North Carolina 27711. October. With February 2009 Addendum.

U.S. Environmental Protection Agency (EPA), 2004c. User's Guide for the AERMOD Meteorological Preprocessor (AERMET), EPA-454/B-03-002, Office of Air Quality Planning and Standards, Research Triangle Park, North Carolina 27711. November. With December 2006 Addendum.

U.S. Environmental Protection Agency (EPA), 2008a. AERMOD Implementation Guide, Office of Air Quality Planning and Standards, Research Triangle Park, North Carolina 27711. January 9, 2008.

U.S. Environmental Protection Agency (EPA), 2008b. AERSURFACE User's Guide, USEPA-454/B-08-001, Office of Air Quality Planning and Standards, Research Triangle Park, North Carolina 27711. January.

U.S. Environmental Protection Agency (EPA), 2008c. 40 CFR Part 51, Appendix W: Guideline on Air Quality Models.

U.S. Environmental Protection Agency (EPA), 2012. AirData Reports for local air quality monitoring sites. http://www.epa.gov/air/data/reports.html.

U.S. Geological Survey, National Land Cover Database website, 2009. Southern California Land Use and Land Cover (LULC). http://edcftp.cr.usgs.gov/pub/data/landcover/states.

4.1.14 Public Health Section References

California Air Resources Board (CARB), 2012. Consolidated table of OEHHA/ARB approved risk assessment health values. (http://arbis.arb.ca.gov/toxics/healthval/contable.pdf).

HARP Express User Manual. Dillingham Software Engineering, Inc., Version 2.07, September 2004.

HARP User Guide, Version 1.4f (2012). CalEPA-Air Resources Board, December 2003.

Hutt, P.B., 1985. Use of quantitative risk assessment in regulatory decision making under federal health and safety statutes, in Risk Quantitation and Regulatory Policy. Eds. D.G. Hoel, R.A. Merrill and F.P. Perera. Banbury Report 19, Cold Springs Harbor Laboratory.

National Institute of Environmental Health Sciences (NIEHS), 1999. Environmental Health Institute report concludes evidence is 'weak' that EMFs cause cancer. Press release. National Institute of Environmental Health Sciences, National Institutes of Health.

OEHHA/CARB, 2003. Air Toxics Hot Spots Program Risk Assessment Guidelines, CalEPA, August 2003. HARP Model, Version 1.4f, Updated 2012.

Risk Science Associates, Inc. (RSA, 2008), Liberty Energy XXIII-Renewable Energy Power Plant Project, Draft EIR, Public Health Section D.11, Aspen Environmental Group, June 2008.

SCAQMD, 2005. Supplemental Guidelines for Preparing Risk Assessments for the Air Toxics Hot Spots Information and Assessment Act (AB2588). July 2005.

Travis, C.C., E.A.C. Crouch, R. Wilson and E.D. Klema, 1987. Cancer risk management: A review of 132 federal regulatory cases. Environ. Sci. Technol. 21:415-420.

APPENDIX 4.1 – AIR QUALITY AND PUBLIC HEALTH

APPENDIX 4.1A	OPERATIONS EMISSIONS QUANTIFICATION AND SUPPORT DATA
APPENDIX 4.1B	MODELING SUPPORT DATA
APPENDIX 4.1C	PROTOCOL FOR INCREMENT ANALYSIS
APPENDIX 4.1D	HEALTH RISK ASSESSMENT SUPPORT DATA
APPENDIX 4.1E	CONSTRUCTION EMISSIONS QUANTIFICATION AND SUPPORT DATA
APPENDIX 4.1F	BACT ANALYSIS AND SUPPORT DATA
APPENDIX 4.1G	MITIGATION STRATEGY
APPENDIX 4.1H	CUMULATIVE ANALYSIS PROTOCOL
APPENDIX 4.1I	SCAQMD PERMITTING FORMS

APPENDIX 4.1A

Calculation of Maximum Hourly, Daily, and Annual Emissions

Tables presented in this Appendix are as follows:

4.1A-1 Auxiliary Boilers #1 and #2 Criteria Pollutant Emissions
4.1A-2 Auxiliary Boilers #1 and #2 HAP Emissions
4.1A-3 NTP Boilers #1 and #2 Criteria Pollutant Emissions
4.1A-4 NTP Boilers #1 and #2 HAP Emissions
4.1A-5 Emergency Generators #1, #2, #3 Criteria and DPM Emissions
4.1A-6 Fire Pump Engines #1, #2, #3 Criteria and DPM Emissions
4.1A-7 WSAC #1 and #2 Criteria Pollutant Emissions
4.1A-8 WSAC #1 and #2 HAP Emissions
4.1A-9 Dedicated Site Vehicle Emissions (Mirror Washing Equipment)
4.1A-10 Site Support Vehicle Emissions LDTs and Water Trucks
4.1A-11 Site Support Vehicle Emissions-Deliveries and Employee Commutes
4.1A-12 Diesel Fuel Storage Tank VOC Emissions
4.1A-13 Emissions Summary Matrix
4.1A-14 Commissioning Emissions Estimates

Also included in this appendix:

Attachment 4.1A-1 System Operational Support Data
Attachment 4.1A-2 Auxiliary Boiler Specification Sheets
Attachment 4.1A-3 Engine Specification Sheets
Attachment 4.1A-4 NTP Boiler Specification Sheets
Attachment 4.1A-5 WSAC Specification Sheets
Attachment 4.1A-6 Diesel Fuel Analysis Data
Attachment 4.1A-7 Natural Gas Fuel Analysis Data
Attachment 4.1A-8 South Coast Air Basin Vehicle Data/EI Data for 2010

Table 4.1A-1 Auxiliary Boilers #1 and #2 Page 1

Calculation of Criteria Pollutant Emissions for Boilers Firing Gaseous Fuels

Boiler Operation Mode: 25-100% MCR Load Case

Ops Hr/Day: 3.5 eq to full load ops

Ops Hr/Yr: 1202 eq to full load ops

1446 actual annual hours at all loads (not eq full load)

# of Units: 2

Fuel Type: Nat Gas

Calculation of Criteria Pollutant Emissions from Each Identical Unit

Compound	Emission Factor, lb/MMscf (1)	Maximum Hourly Emissions, lb/hr (2)	Maximum Daily Emissions, lb/day	Maximum Annual Emissions, lbs/yr	Annual Emissions, ton/yr (3)	All Units: Maximum Hourly Emissions, lb/hr	All Units: Maximum Daily Emissions, lb/day	All Units: Maximum Annual Emissions, lbs/yr	All Units: Annual Emissions, ton/yr
NOx	11.220	2.74E+00	9.59E+00	3.29E+03	1.65E+00	5.48E+00	1.92E+01	6.58E+03	3.29E+00
CO	18.360	4.48E+00	1.57E+01	5.39E+03	2.69E+00	8.96E+00	3.14E+01	1.08E+04	5.39E+00
VOC	5.508	1.34E+00	4.71E+00	1.62E+03	8.08E-01	2.69E+00	9.41E+00	3.23E+03	1.62E+00
SOx	3.060	7.47E-01	2.61E+00	8.98E+02	4.49E-01	1.49E+00	5.23E+00	1.80E+03	8.98E-01
PM10	5.100	1.25E+00	4.36E+00	1.50E+03	7.48E-01	2.49E+00	8.72E+00	2.99E+03	1.50E+00
PM2.5	5.100	1.25E+00	4.36E+00	1.50E+03	7.48E-01	2.49E+00	8.72E+00	2.99E+03	1.50E+00
	lbs/mmbtu								
CO2	116.95	2.91E+04	1.02E+05	3.50E+07	1.75E+04	5.82E+04	2.04E+05	7.00E+07	3.50E+04
Methane	0.0130	3.24E+00	1.13E+01	3.89E+03	1.95E+00	6.47E+00	2.27E+01	7.78E+03	3.89E+00
N2O	0.0002	5.49E-02	1.92E-01	6.60E+01	3.30E-02	1.10E-01	3.84E-01	1.32E+02	6.60E-02
CO2e									3.51E+04

Notes:

(1) natural gas criteria pollutant EF factors

(2) Based on maximum hourly boiler fuel use of 249 MMBtu/hr/boiler

and fuel HHV of 1020 Btu/scf gives 0.2441 MMscf/hr/boiler.

(3) Based on maximum annual boiler fuel use of 299,298 MMBtu/yr/boiler

and fuel HHV of 1020 Btu/scf gives 293.4294 MMscf/yr/boiler.

(4) LNBs with FGR and GCPs

(5) PM2.5 = PM10

(6) NG fuel S at 0.75 grains/100scf

Refs:

(1) EFs from Palen project team 11-15-12

(2) GHG EFs from CCAR General Protocol, January 2009.

Table 4.1A-1 Auxiliary Boilers #1 and #2 **Page 2**

Calculation of Criteria Pollutant Emissions for Boilers Firing Gaseous Fuels

Boiler Operation Mode: 12.5% Low Load Case

Ops Hr/Day: 1.7

Ops Hr/Yr: 580

# of Units: 2

Fuel Type: Nat Gas

Calculation of Criteria Pollutant Emissions from Each Identical Unit

Compound	Emission Factor, lb/MMscf (1)	Maximum Hourly Emissions, lb/hr (2)	Maximum Daily Emissions, lb/day	Maximum Annual Emissions, lbs/yr	Annual Emissions, ton/yr (3)	All Units Maximum Hourly Emissions, lb/hr	All Units Maximum Daily Emissions, lb/day	All Units Maximum Annual Emissions, lbs/yr	All Units Annual Emissions, ton/yr
NOx	11.220	3.42E-01	5.82E-01	1.98E+02	9.92E-02	6.84E-01	1.16E+00	3.97E+02	1.98E-01
CO	146.880	4.48E+00	7.61E+00	2.60E+03	1.30E+00	8.96E+00	1.52E+01	5.19E+03	2.60E+00
VOC	42.840	1.31E+00	2.22E+00	7.58E+02	3.79E-01	2.61E+00	4.44E+00	1.52E+03	7.58E-01
SOx	3.060	9.33E-02	1.59E-01	5.41E+01	2.71E-02	1.87E-01	3.17E-01	1.08E+02	5.41E-02
PM10	5.100	1.56E-01	2.64E-01	9.02E+01	4.51E-02	3.11E-01	5.29E-01	1.80E+02	9.02E-02
PM2.5	5.100	1.56E-01	2.64E-01	9.02E+01	4.51E-02	3.11E-01	5.29E-01	1.80E+02	9.02E-02
	lbs/mmbtu								
CO2	116.95	3.64E+03	6.18E+03	2.11E+06	1.05E+03	7.27E+03	1.24E+04	4.22E+06	2.11E+03
Methane	0.0130	4.04E-01	6.87E-01	2.34E+02	1.17E-01	8.09E-01	1.37E+00	4.69E+02	2.34E-01
N2O	0.0002	6.86E-03	1.17E-02	3.98E+00	1.99E-03	1.37E-02	2.33E-02	7.95E+00	3.98E-03
CO2e									2.12E+03

Notes:

(1) natural gas criteria pollutant EF factors

(2) Based on maximum hourly boiler fuel use of 31.1 MMBtu/hr/boiler and fuel HHV of 1020 Btu/scf gives 0.0305 MMscf/hr/boiler.

(3) Based on maximum annual boiler fuel use of 18,038 MMBtu/yr/boiler and fuel HHV of 1020 Btu/scf gives 17.6843 MMscf/yr/boiler.

(4) LNBs with FGR and GCPs

(5) PM2.5 = PM10

(6) NG fuel S at 0.75 grains/100scf

Refs:

(1) EFs from Palen project team 11-15-12

(2) GHG EFs from CCAR General Protocol, January 2009.

Table 4.1A-1 Aux Boiler Startup Emissions Estimates **Page 3**

			SU/yr:	348
Boiler Operation Mode:	Startup		# of Units:	2
Startup Period, hrs:	0.5	low load case	SU hrs/yr:	174
Remainder of SU hour:	0.5	assumed at low load Ops case (12.5% load) These emissions hours are accounted for under the low load Ops case.		

Emissions Factors:

Pollutant	SU lb/mmscf
Nox	89.76
CO	148.92
VOC	43.86
SOx	3.06
PM10/2.5	10.1
CO2e	117.285 lb/mmbtu (composite NG boiler factor)

Fuel use rate for SU low load case:

31.1	mmbtu/hr low load case hour
15.55	mmbtu per SU period
0.0152	mmscf per SU period

Startup Emissions Estimates

	Single Unit			All Units		
Pollutant	lbs/SU	lbs/yr	TPY	lbs/SU hr	lbs/yr	TPY
Nox	1.37	476.20	0.24	2.74	952.41	0.48
CO	2.27	790.06	0.40	4.54	1580.13	0.79
VOC	0.67	232.69	0.12	1.34	465.38	0.23
SOx	0.05	16.23	0.01	0.09	32.47	0.02
PM10/2.5	0.15	53.58	0.03	0.31	107.17	0.05
CO2e	1824	634676	317	3648	1269352	635

Startup Hour Emissions(0.5 hr SU and 0.5 hr low load)

	lbs/hr
Nox	1.54
CO	4.51
VOC	1.32
SOx	0.09
PM10/2.5	0.23
CO2e	3642

Notes:
1. EFs and ops data supplied by Palen project engineers, 11-15-12.
2. SU EFs derived from Hidden Hill Solar Project, Table 5.1B-2R, April 2012.

Table 4.1A-1 Aux Boiler Daily Emissions Estimates

Daily Emissions Estimate (SU, low load, high load)

Emissions Values by Load

	SU lbs/hr	Low lbs/hr	High lbs/hr
Nox	1.54	0.342	2.74
CO	4.51	4.48	4.48
VOC	1.32	1.31	1.34
SOx	0.09	0.0933	0.747
PM10	0.23	0.156	1.25
PM2.5	0.23	0.156	1.25

SU hour = 0.5 hr in SU mode plus 0.5 hr at low load
1 SU hr per day
1.7 hrs per day of low load ops
3.5 hrs per day of high load ops

Estimated Maximum Daily Emissions (each aux boiler)

	lbs/day
Nox	11.71
CO	27.81
VOC	8.24
SOx	2.86
PM10	4.87
PM2.5	4.87

Table 4.1A-2 Aux Boilers #1 and #2
Calculation of Hazardous Air Pollutant Emissions for Boilers Firing Gaseous Fuels

Boiler Operation Mode:	All modes-Annual		# of Units:	2
Max Hourly Fuel Use:	0.24412	mmscf	Fuel Type:	Nat Gas
Max Daily Fuel Use:	0.9765	mmscf at 4 hrs/day	Hrs/day:	4
Max Annual Fuel Use:	293.43	mmscf/yr	Hrs/Yr:	1956

Calculation of Hazardous Air Pollutant Emissions from Each Identical Unit

HAP	Emission Factor, lb/MMscf (1)	Maximum Hourly Emissions, lb/hr	Maximum Daily Emissions, lb/day	Maximum Annual Emissions, lbs/yr	Annual Emissions, ton/yr	All Units: Maximum Hourly Emissions, lb/hr	All Units: Maximum Daily Emissions, lb/day	All Units: Maximum Annual Emissions, lbs/yr	All Units: Annual Emissions, ton/yr
Acetaldehyde	9.00E-04	2.20E-04	8.79E-04	2.64E-01	1.32E-04	4.39E-04	1.76E-03	5.28E-01	2.64E-04
Acrolein	8.00E-04	1.95E-04	7.81E-04	2.35E-01	1.17E-04	3.91E-04	1.56E-03	4.69E-01	2.35E-04
Ammonia		0.00E+00	0.00E+00	0.00E+00	0.00E+00	0.00E+00	0.00E+00	0.00E+00	0.00E+00
Benzene	1.70E-03	4.15E-04	1.66E-03	4.99E-01	2.49E-04	8.30E-04	3.32E-03	9.98E-01	4.99E-04
1,3-Butadiene	0.00E+00	0.00E+00	0.00E+00	0.00E+00	0.00E+00	0.00E+00	0.00E+00	0.00E+00	0.00E+00
Ethylbenzene	2.00E-03	4.88E-04	1.95E-03	5.87E-01	2.93E-04	9.76E-04	3.91E-03	1.17E+00	5.87E-04
Formaldehyde	3.60E-03	8.79E-04	3.52E-03	1.06E+00	5.28E-04	1.76E-03	7.03E-03	2.11E+00	1.06E-03
Hexane	1.30E-03	3.17E-04	1.27E-03	3.81E-01	1.91E-04	6.35E-04	2.54E-03	7.63E-01	3.81E-04
Naphthalene	3.00E-04	7.32E-05	2.93E-04	8.80E-02	4.40E-05	1.46E-04	5.86E-04	1.76E-01	8.80E-05
PAHs (4)	1.00E-04	2.44E-05	9.77E-05	2.93E-02	1.47E-05	4.88E-05	1.95E-04	5.87E-02	2.93E-05
Propylene	1.55E-02	3.78E-03	1.51E-02	4.55E+00	2.27E-03	7.57E-03	3.03E-02	9.10E+00	4.55E-03
Propylene oxide	0.00E+00	0.00E+00	0.00E+00	0.00E+00	0.00E+00	0.00E+00	0.00E+00	0.00E+00	0.00E+00
Toluene	7.80E-03	1.90E-03	7.62E-03	2.29E+00	1.14E-03	3.81E-03	1.52E-02	4.58E+00	2.29E-03
Xylene	5.80E-03	1.42E-03	5.66E-03	1.70E+00	8.51E-04	2.83E-03	1.13E-02	3.40E+00	1.70E-03
		0.00E+00	0.00E+00	0.00E+00	0.00E+00	0.00E+00	0.00E+00	0.00E+00	0.00E+00
		0.00E+00	0.00E+00	0.00E+00	0.00E+00	0.00E+00	0.00E+00	0.00E+00	0.00E+00
		0.00E+00	0.00E+00	0.00E+00	0.00E+00	0.00E+00	0.00E+00	0.00E+00	0.00E+00
		0.00E+00	0.00E+00	0.00E+00	0.00E+00	0.00E+00	0.00E+00	0.00E+00	0.00E+00
		0.00E+00	0.00E+00	0.00E+00	0.00E+00	0.00E+00	0.00E+00	0.00E+00	0.00E+00
		0.00E+00	0.00E+00	0.00E+00	0.00E+00	0.00E+00	0.00E+00	0.00E+00	0.00E+00
		0.00E+00	0.00E+00	0.00E+00	0.00E+00	0.00E+00	0.00E+00	0.00E+00	0.00E+00
		0.00E+00	0.00E+00	0.00E+00	0.00E+00	0.00E+00	0.00E+00	0.00E+00	0.00E+00
		0.00E+00	0.00E+00	0.00E+00	0.00E+00	0.00E+00	0.00E+00	0.00E+00	0.00E+00

Notes:
(1) natural gas HAPs emission factors
(2) Fuel HHV 1020 btu/scf
(3) Polycyclic aromatic hydrocarbons, excluding naphthalene (treated separately).
(4) LNB with FGR and GCPs
(5) all fuel values based on full load equivalents per Palen Aux boiler data sheets

Refs: Efs derived from Hidden Hill Solar AFC, Table 5.1B-14R, April 2012

Rev. 2/27/2013

Table 4.1A-3 NTP Boilers #1 and #2
Calculation of Criteria Pollutant Emissions for Boilers Firing Gaseous Fuels

Boiler Operation Mode: Normal firing mode
Ops Hr/Day: 14 includes 1 hr SU (7)
Ops Hr/Yr: 4872 includes SU (7)

# of Units: 2
Fuel Type: Nat Gas

Calculation of Criteria Pollutant Emissions from Each Identical Unit

Compound	Emission Factor, lb/MMscf (1)	Maximum Hourly Emissions, lb/hr (2)	Maximum Daily Emissions, lb/day	Maximum Annual Emissions, lbs/yr	Annual Emissions, ton/yr (3)	All Units: Maximum Hourly Emissions, lb/hr	All Units: Maximum Daily Emissions, lb/day	All Units: Maximum Annual Emissions, lbs/yr	All Units: Annual Emissions, ton/yr
NOx	11.220	1.10E-01	1.54E+00	5.36E+02	2.68E-01	2.20E-01	3.08E+00	1.07E+03	5.36E-01
CO	37.332	3.66E-01	5.12E+00	1.78E+03	8.92E-01	7.32E-01	1.02E+01	3.57E+03	1.78E+00
VOC	5.508	5.40E-02	7.56E-01	2.63E+02	1.32E-01	1.08E-01	1.51E+00	5.26E+02	2.63E-01
SOx	0.943	9.25E-03	1.29E-01	4.50E+01	2.25E-02	1.85E-02	2.59E-01	9.01E+01	4.50E-02
PM10	5.100	5.00E-02	7.00E-01	2.44E+02	1.22E-01	1.00E-01	1.40E+00	4.87E+02	2.44E-01
PM2.5	5.100	5.00E-02	7.00E-01	2.44E+02	1.22E-01	1.00E-01	1.40E+00	4.87E+02	2.44E-01
	lbs/mmbtu								
CO2	116.95	1.17E+03	1.64E+04	5.70E+06	2.85E+03	2.34E+03	3.27E+04	1.14E+07	5.70E+03
Methane	0.0130	1.30E-01	1.82E+00	6.33E+02	3.17E-01	2.60E-01	3.64E+00	1.27E+03	6.33E-01
N2O	0.0002	2.21E-03	3.09E-02	1.07E+01	5.37E-03	4.41E-03	6.17E-02	2.15E+01	1.07E-02
CO2e									5.71E+03

Notes:
(1) natural gas criteria pollutant EF factors
(2) Based on maximum hourly boiler fuel use of 10 MMBtu/hr/boiler
and fuel HHV of 1020 Btu/scf gives 0.0098 MMscf/hr/boiler.
(3) Based on maximum annual boiler fuel use of 48,720 MMBtu/yr/boiler
and fuel HHV of 1020 Btu/scf gives 47.7647 MMscf/yr/boiler.
(4) LNBs with FGR and GCPs
(5) PM2.5 = PM10
(6) Fuel S at 0.75 grains/100 scf
(7) this unit is so small that SU hour emissions are considered to be equivalent to full load hourly emissions

Refs:
(1) EFs and Ops data from Palen project team NTP boiler data sheets
(2) GHG EFs from CCAR General Protocol, January 2009.

Table 4.1A-4 NTP Boilers #1 and #2
Calculation of Hazardous Air Pollutant Emissions for Boilers Firing Gaseous Fuels

Boiler Operation Mode:	All modes-Annual		# of Units:	2
Max Hourly Fuel Use:	0.009804	mmscf	Fuel Type:	Nat Gas
Max Daily Fuel Use:	0.1373	mmscf	Hrs/day:	14
Max Annual Fuel Use:	47.765	mmscf	Hrs/Yr:	4872

Calculation of Hazardous Air Pollutant Emissions from Each Identical Unit

HAP	Emission Factor, lb/MMscf (1)	Maximum Hourly Emissions, lb/hr	Maximum Daily Emissions, lb/day	Maximum Annual Emissions, lbs/yr	Annual Emissions, ton/yr	All Units: Maximum Hourly Emissions, lb/hr	All Units: Maximum Daily Emissions, lb/day	All Units: Maximum Annual Emissions, lbs/yr	All Units: Annual Emissions, ton/yr
Acetaldehyde	3.10E-03	3.04E-05	4.26E-04	1.48E-01	7.40E-05	6.08E-05	8.51E-04	2.96E-01	1.48E-04
Acrolein	2.70E-03	2.65E-05	3.71E-04	1.29E-01	6.45E-05	5.29E-05	7.41E-04	2.58E-01	1.29E-04
Ammonia		0.00E+00	0.00E+00	0.00E+00	0.00E+00	0.00E+00	0.00E+00	0.00E+00	0.00E+00
Benzene	5.80E-03	5.69E-05	7.96E-04	2.77E-01	1.39E-04	1.14E-04	1.59E-03	5.54E-01	2.77E-04
1,3-Butadiene	0.00E+00	0.00E+00	0.00E+00	0.00E+00	0.00E+00	0.00E+00	0.00E+00	0.00E+00	0.00E+00
Ethylbenzene	6.90E-03	6.76E-05	9.47E-04	3.30E-01	1.65E-04	1.35E-04	1.89E-03	6.59E-01	3.30E-04
Formaldehyde	1.23E-02	1.21E-04	1.69E-03	5.88E-01	2.94E-04	2.41E-04	3.38E-03	1.18E+00	5.88E-04
Hexane	4.60E-03	4.51E-05	6.32E-04	2.20E-01	1.10E-04	9.02E-05	1.26E-03	4.39E-01	2.20E-04
Naphthalene	3.00E-04	2.94E-06	4.12E-05	1.43E-02	7.16E-06	5.88E-06	8.24E-05	2.87E-02	1.43E-05
PAHs (4)	1.00E-04	9.80E-07	1.37E-05	4.78E-03	2.39E-06	1.96E-06	2.75E-05	9.55E-03	4.78E-06
Propylene	5.30E-01	5.20E-03	7.28E-02	2.53E+01	1.27E-02	1.04E-02	1.46E-01	5.06E+01	2.53E-02
Propylene oxide	0.00E+00	0.00E+00	0.00E+00	0.00E+00	0.00E+00	0.00E+00	0.00E+00	0.00E+00	0.00E+00
Toluene	2.65E-02	2.60E-04	3.64E-03	1.27E+00	6.33E-04	5.20E-04	7.28E-03	2.53E+00	1.27E-03
Xylene	1.97E-02	1.93E-04	2.70E-03	9.41E-01	4.70E-04	3.86E-04	5.41E-03	1.88E+00	9.41E-04
		0.00E+00	0.00E+00	0.00E+00	0.00E+00	0.00E+00	0.00E+00	0.00E+00	0.00E+00
		0.00E+00	0.00E+00	0.00E+00	0.00E+00	0.00E+00	0.00E+00	0.00E+00	0.00E+00
		0.00E+00	0.00E+00	0.00E+00	0.00E+00	0.00E+00	0.00E+00	0.00E+00	0.00E+00
		0.00E+00	0.00E+00	0.00E+00	0.00E+00	0.00E+00	0.00E+00	0.00E+00	0.00E+00
		0.00E+00	0.00E+00	0.00E+00	0.00E+00	0.00E+00	0.00E+00	0.00E+00	0.00E+00
		0.00E+00	0.00E+00	0.00E+00	0.00E+00	0.00E+00	0.00E+00	0.00E+00	0.00E+00
		0.00E+00	0.00E+00	0.00E+00	0.00E+00	0.00E+00	0.00E+00	0.00E+00	0.00E+00
		0.00E+00	0.00E+00	0.00E+00	0.00E+00	0.00E+00	0.00E+00	0.00E+00	0.00E+00
		0.00E+00	0.00E+00	0.00E+00	0.00E+00	0.00E+00	0.00E+00	0.00E+00	0.00E+00

Notes:
(1) natural gas HAPs emission factors
(2) Fuel HHV 1020 btu/scf
(3) Polycyclic aromatic hydrocarbons, excluding naphthalene (treated separately).
(4) LNB with FGR and GCPs

Refs: Efs derived from Hidden Hills AFC, Table 5.1B-16R, April 2012

Rev. 2/27/2013

Table 4.1A-5 EXPECTED INTERNAL COMBUSTION ENGINE EMISSIONS

Liquid Fuel

Large Emergency Generators

# of Identical Engines: 2

Mfg:	Caterpillar	
Engine #:	3516C or equiv.	
Kw	2500	approx.
BHP:	3633	
RPM:	-	
Fuel:	#2 Diesel	
Fuel Use:	175	Gph (1)
FuelHHV	139000	Btu/gal
mmbtu/hr	24.33	HHV
EPA Tier:	4	

Stack Data

Height:	20	Ft.
Diameter:	1.67	Ft.
Temp:	925	deg F
ACFM:	19600	

input the mfg ACFM or calculate per Exhaust sheet)

Area:	2.190	Sq.Ft.
Velocity:	149	Ft/Sec
Max Daily Op Hrs:	1	
Max Annual Op Hrs:	199	

Fuel Wt:	6.9	Lbs/gal
Fuel S:	0.0015	% wt.
Fuel S:	0.1035	Lbs/1000 gal
SO2:	0.207	Lbs/1000 gal

			Single Engine				*All Engines*			
EFs (g/bhp-hr) (5)			**Lb/Hr**	**Lb/Day**	**Lbs/Yr**	**Tons/Yr**	*Lb/Hr*	*Lb/Day*	*Lbs/Yr*	*Tons/Yr*
NOx	0.59		4.72	4.72	939.54	0.470	*9.44*	*9.44*	*1879.08*	*0.94*
CO	0.03		0.24	0.24	47.77	0.024	*0.48*	*0.48*	*95.55*	*0.05*
VOC	0.01		0.08	0.08	15.92	0.008	*0.16*	*0.16*	*31.85*	*0.016*
PM10	0.03	(2,3)	0.24	0.24	47.77	0.024	*0.48*	*0.48*	*95.55*	*0.048*
SOx	NA		0.04	0.04	7.21	0.0036	*0.07*	*0.07*	*14.42*	*0.007*
	lbs/gal (4)									
CO2	22.38		3917	3917	779384	390	*7833*	*7833*	*1558767*	*779*
Methane	0.00066		0.12	0.12	22.98	0.011	*0.23*	*0.23*	*45.97*	*0.023*
N2O	0.00022		0.04	0.04	7.66	0.0038	*0.08*	*0.08*	*15.32*	*0.0077*
CO2e						391.1				*782.2*

Notes:

1. fuel consumption based on 0.055 gal/hp-hr (avg EPA and SCAQMD values) if no value given by mfg for specific engine.
2. PM10 equals PM2.5.
3. PM10 used in HRA to represent DPM emissions.
4. GHG EFs from CCAR General Protocol, January 2009.
5. EFs from Cat data sheet (nominal emissions values), EPD0028-E, Oct 2011.

Table 4.1A-5 EXPECTED INTERNAL COMBUSTION ENGINE EMISSIONS

Liquid Fuel

Small Emergency Generator

# of Identical Engines: 1

Mfg:	Caterpillar	
Engine #:	C9	
Kw	250	approx.
BHP:	398	
RPM:	-	
Fuel:	#2 Diesel	
Fuel Use:	20	Gph (1)
FuelHHV	139000	Btu/gal
mmbtu/hr	2.78	HHV
EPA Tier:	3	

Stack Data

Height:	16	Ft.
Diameter:	0.583	Ft.
Temp:	855	deg F
ACFM:	2250	

input the mfg ACFM or calculate per Exhaust sheet)

Area:	0.267	Sq.Ft.
Velocity:	140	Ft/Sec
Max Daily Op Hrs:	1	
Max Annual Op Hrs:	199	

Fuel Wt:	6.9	Lbs/gal
Fuel S:	0.0015	% wt.
Fuel S:	0.1035	Lbs/1000 gal
SO2:	0.207	Lbs/1000 gal

			Single Engine				*All Engines*			
EFs (g/bhp-hr) (5)			**Lb/Hr**	**Lb/Day**	**Lbs/Yr**	**Tons/Yr**	***Lb/Hr***	***Lb/Day***	***Lbs/Yr***	***Tons/Yr***
NOx	2.97		2.60	2.60	518.13	0.259	*2.60*	*2.60*	*518.13*	*0.26*
CO	0.36		0.32	0.32	62.80	0.031	*0.32*	*0.32*	*62.80*	*0.03*
VOC	0.1		0.09	0.09	17.45	0.009	*0.09*	*0.09*	*17.45*	*0.009*
PM10	0.079	(2,3)	0.07	0.07	13.78	0.007	*0.07*	*0.07*	*13.78*	*0.007*
SOx	NA		0.00	0.00	0.82	0.0004	*0.00*	*0.00*	*0.82*	*0.000*
	lbs/gal (4)									
CO2	22.38		448	448	89072	45	*448*	*448*	*89072*	*45*
Methane	0.00066		0.01	0.01	2.63	0.001	*0.01*	*0.01*	*2.63*	*0.001*
N2O	0.00022		0.00	0.00	0.88	0.0004	*0.00*	*0.00*	*0.88*	*0.0004*
CO2e						44.7				*44.7*

Notes:

1. fuel consumption based on 0.055 gal/hp-hr (avg EPA and SCAQMD values) if no value given by mfg for specific engine.
2. PM10 equals PM2.5.
3. PM10 used in HRA to represent DPM emissions.
4. GHG EFs from CCAR General Protocol, Janaury 2009.
5. EFs from Cat data sheet (nominal emissions values) 17804067, June 2011.

Table 4.1A-6 EXPECTED INTERNAL COMBUSTION ENGINE EMISSIONS

Liquid Fuel

# of Identical Engines: 2

Large Emergency Fire Pumps

Mfg:	Clarke/John Deere	
Engine #:	JX6H-UFAD88	
Kw	0	approx.
BHP:	617	
RPM:	1750	
Fuel:	#2 Diesel	
Fuel Use:	34	Gph (1)
FuelHHV	139000	Btu/gal
mmbtu/hr	4.73	HHV
EPA Tier:	3	

Stack Data

Height:	20	Ft.
Diameter:	0.67	Ft.
Temp:		deg F
ACFM:		

input the mfg ACFM or calculate per Exhaust sheet)

Area:	0.353	Sq.Ft.
Velocity:	0	Ft/Sec
Max Daily Op Hrs:	1	
Max Annual Op Hrs:	199	

Fuel Wt:	6.9	Lbs/gal
Fuel S:	0.0015	% wt.
Fuel S:	0.1035	Lbs/1000 gal
SO2:	0.207	Lbs/1000 gal

			Single Engine				*All Engines*			
EFs (g/bhp-hr) (5)			**Lb/Hr**	**Lb/Day**	**Lbs/Yr**	**Tons/Yr**	***Lb/Hr***	***Lb/Day***	***Lbs/Yr***	***Tons/Yr***
NOx	2.6		3.53	3.53	703.16	0.352	*7.07*	*7.07*	*1406.33*	*0.70*
CO	0.5		0.68	0.68	135.22	0.068	*1.36*	*1.36*	*270.45*	*0.14*
VOC	0.1		0.14	0.14	27.04	0.014	*0.27*	*0.27*	*54.09*	*0.027*
PM10	0.09	(2,3)	0.12	0.12	24.34	0.012	*0.24*	*0.24*	*48.68*	*0.024*
SOx	NA		0.007	0.007	1.40	0.0007	*0.01*	*0.01*	*2.80*	*0.0014*
	lbs/gal (4)									
CO2	22.38		761	761	151423	76	*1522*	*1522*	*302846*	*151*
Methane	0.00066		0.022	0.022	4.47	0.002	*0.045*	*0.045*	*8.93*	*0.004*
N2O	0.00022		0.007	0.007	1.49	0.0007	*0.015*	*0.015*	*2.98*	*0.0015*
CO2e						76.0				*152.0*

Notes:

1. fuel consumption based on 0.055 gal/hp-hr (avg EPA and SCAQMD values) if no value given by mfg for specific engine.
2. PM10 equals PM2.5.
3. PM10 used in HRA to represent DPM emissions.
4. GHG EFs from CCAR General Protocol, Janaury 2009.
5. EFs derived from Clarke data sheet JDPS 4/21/2012. Rated emissions data.

Table 4.1A-6 EXPECTED INTERNAL COMBUSTION ENGINE EMISSIONS

Liquid Fuel

# of Identical Engines: 1

Common Area Emergency Fire Pump

Mfg:	Cummins	
Engine #:	JX6H-UFAD88	
Kw	0	approx.
BHP:	617	
RPM:	1750	
Fuel:	#2 Diesel	
Fuel Use:	34	Gph (1)
FuelHHV	139000	Btu/gal
mmbtu/hr	4.73	HHV
EPA Tier:	3	

Stack Data

Height:	20	Ft.
Diameter:	0.67	Ft.
Temp:		deg F
ACFM:		

input the mfg ACFM or calculate per Exhaust sheet)

Area:	0.353	Sq.Ft.
Velocity:	0	Ft/Sec
Max Daily Op Hrs:	1	
Max Annual Op Hrs:	199	

Fuel Wt:	6.9	Lbs/gal
Fuel S:	0.0015	% wt.
Fuel S:	0.1035	Lbs/1000 gal
SO2:	0.207	Lbs/1000 gal

			Single Engine				*All Engines*			
EFs (g/bhp-hr) (5)			**Lb/Hr**	**Lb/Day**	**Lbs/Yr**	**Tons/Yr**	***Lb/Hr***	***Lb/Day***	***Lbs/Yr***	***Tons/Yr***
NOx	2.6		3.53	3.53	703.16	0.352	*3.53*	*3.53*	*703.16*	*0.35*
CO	0.5		0.68	0.68	135.22	0.068	*0.68*	*0.68*	*135.22*	*0.07*
VOC	0.1		0.14	0.14	27.04	0.014	*0.14*	*0.14*	*27.04*	*0.014*
PM10	0.09	(2,3)	0.12	0.12	24.34	0.012	*0.12*	*0.12*	*24.34*	*0.012*
SOx	NA		0.007	0.007	1.40	0.0007	*0.01*	*0.01*	*1.40*	*0.0007*
	lbs/gal (4)									
CO2	22.38		761	761	151423	76	*761*	*761*	*151423*	*76*
Methane	0.00066		0.022	0.022	4.47	0.002	*0.022*	*0.022*	*4.47*	*0.002*
N2O	0.00022		0.007	0.007	1.49	0.0007	*0.007*	*0.007*	*1.49*	*0.0007*
CO2e						76.0				*76.0*

Notes:

1. fuel consumption based on 0.055 gal/hp-hr (avg EPA and SCAQMD values) if no value given by mfg for specific engine.
2. PM10 equals PM2.5.
3. PM10 used in HRA to represent DPM emissions.
4. GHG EFs from CCAR General Protocol, January 2009.
5. EFs derived from Clarke data sheet JDPS 4/21/2012. Rated emissions data.

Table 4.1A-7 Wet SAC #1 and #2 Emissions Estimates

Wet SAC Particulate Emissions

				Per Wet SAC	Per Cell	All WSACs
# of Identical WSACs:	2					
Operational Schedule:	Hrs/day	Days/Yr	Hrs/Yr			
	12	n/a	2000			
Cells per WSAC:	4					
Pumping rate of recirculation pumps (gal/min)				4,000.0		
Flow of cooling water (lbs/hr)				1,999,200.0		
Avg TDS of circ water (mg/l or ppmw)				1,500.0		
Flow of dissolved solids (lbs/hr)				2998.80		
Fraction of flow producing drift*				1.00		
Control efficiency of drift eliminators, %	0.0005			0.000005		
Calculated drift rate (lbs water/hr)				10.0		
PM10 emissions (lbs/hr)				**0.015**	**0.004**	**0.030**
PM10 emissions (lbs/day)				**0.180**	**0.045**	**0.360**
PM10 emissions (tpy)				**0.015**	**0.004**	**0.030**
PM2.5 fraction of PM10				1.00		
PM2.5 emissions (lbs/hr)				**0.015**	**0.004**	**0.030**
PM2.5 emissions (lbs/day)				**0.180**	**0.045**	**0.360**
PM2.5 emissions (tpy)				**0.015**	**0.004**	**0.030**

Notes:
Based on Method AP 42, Section 13.4, Jan 1995
*Technical Report EPA-600-7-79-251a, Page 63
Effects of Pathogenic and Toxic Materials Transported Via Cooling Device Drift - Volume 1.

Table 4.1A-8
Calculation of Hazardous and Toxic Pollutant Emissions from Wet SACs

Cells per Wet SAC: 4 Max Tower Drift Rate: 10 lbs/hr Op Hrs/Day: 12
# of Identical WSACs: 2 Op Hrs/Yr: 2000

Constituent	Concentration in Cooling Tower Water		Total Single Tower Emissions, lb/hr	Total Single Tower Emissions, lb/day	Total Single Tower Emissions, ton/yr	Single Cell Emissions, lb/hr	Single Cell Emissions, lb/day	Single Cell Emissions, ton/yr	Total All Towers Emissions, lb/hr	Total All Towers Emissions, lb/day	Total All Towers Emissions, ton/yr
Ammonia	0	ppm	0.00E+00	0.00E+00	0.00E+00	0.00E+00	0.00E+00	0.00E+00	0.00E+00	0.00E+00	0.00E+00
Copper	0.01	ppm	1.00E-07	1.20E-06	1.00E-07	2.50E-08	3.00E-07	2.50E-08	2.00E-07	2.40E-06	2.00E-07
Silver	0	ppm	0.00E+00	0.00E+00	0.00E+00	0.00E+00	0.00E+00	0.00E+00	0.00E+00	0.00E+00	0.00E+00
Zinc	0	ppm	0.00E+00	0.00E+00	0.00E+00	0.00E+00	0.00E+00	0.00E+00	0.00E+00	0.00E+00	0.00E+00
Arsenic	0	ppm	0.00E+00	0.00E+00	0.00E+00	0.00E+00	0.00E+00	0.00E+00	0.00E+00	0.00E+00	0.00E+00
Beryllium	0.0025	ppm	2.50E-08	3.00E-07	2.50E-08	6.25E-09	7.50E-08	6.25E-09	5.00E-08	6.00E-07	5.00E-08
Cadmium	0	ppm	0.00E+00	0.00E+00	0.00E+00	0.00E+00	0.00E+00	0.00E+00	0.00E+00	0.00E+00	0.00E+00
Chromium	0	ppm	0.00E+00	0.00E+00	0.00E+00	0.00E+00	0.00E+00	0.00E+00	0.00E+00	0.00E+00	0.00E+00
Lead	0	ppm	0.00E+00	0.00E+00	0.00E+00	0.00E+00	0.00E+00	0.00E+00	0.00E+00	0.00E+00	0.00E+00
Mercury	0	ppm	0.00E+00	0.00E+00	0.00E+00	0.00E+00	0.00E+00	0.00E+00	0.00E+00	0.00E+00	0.00E+00
Nickel	0	ppm	0.00E+00	0.00E+00	0.00E+00	0.00E+00	0.00E+00	0.00E+00	0.00E+00	0.00E+00	0.00E+00
Vanadium	0	ppm	0.00E+00	0.00E+00	0.00E+00	0.00E+00	0.00E+00	0.00E+00	0.00E+00	0.00E+00	0.00E+00
Barium	0	ppm	0.00E+00	0.00E+00	0.00E+00	0.00E+00	0.00E+00	0.00E+00	0.00E+00	0.00E+00	0.00E+00
Cobalt	0	ppm	0.00E+00	0.00E+00	0.00E+00	0.00E+00	0.00E+00	0.00E+00	0.00E+00	0.00E+00	0.00E+00
Antimony	0	ppm	0.00E+00	0.00E+00	0.00E+00	0.00E+00	0.00E+00	0.00E+00	0.00E+00	0.00E+00	0.00E+00
Thallium	0	ppm	0.00E+00	0.00E+00	0.00E+00	0.00E+00	0.00E+00	0.00E+00	0.00E+00	0.00E+00	0.00E+00
Molybdenum	0	ppm	0.00E+00	0.00E+00	0.00E+00	0.00E+00	0.00E+00	0.00E+00	0.00E+00	0.00E+00	0.00E+00
	0	ppm	0.00E+00	0.00E+00	0.00E+00	0.00E+00	0.00E+00	0.00E+00	0.00E+00	0.00E+00	0.00E+00
	0	ppm	0.00E+00	0.00E+00	0.00E+00	0.00E+00	0.00E+00	0.00E+00	0.00E+00	0.00E+00	0.00E+00
	0	ppm	0.00E+00	0.00E+00	0.00E+00	0.00E+00	0.00E+00	0.00E+00	0.00E+00	0.00E+00	0.00E+00

Notes:
(1) Water analysis data supplied by project applicant. See support data on next page.
(2) analysis values for 800 bgs well
(3) mg/l = ppmw

Table 4.1A-9 Palen Solar Mirror Washing Activity Emissions

Activity Schedule:

Days/yr:	365
Hrs/day:	20

Data supplied by Palen project engineers, 11-15-12.
*East and West power sites combined w/o TES.

Input Values

FFT MWM Ops:

# of vehicles on site:*	24
HP/each unit:	310
Fuel use, gal/hr/FFT:	17.6
Fuel use, gal/day/FFT:	352
VMT/yr/FFT:	2700
2013 On-road certified engines	
Fuel type:	Std Diesel

NT MWM Ops:

# of vehicles on site:*	2
HP/each unit:	145
Fuel use, gal/hr/FFT:	8.8
Fuel use, gal/day/FFT:	176
VMT/yr/FFT:	4000
Tier 4 certified non-road engines	
Fuel type:	Std Diesel

*Calculated Values**

Total VMT/year:	64800
Total Ops hrs/yr:	7300
Fuel use, 10^3 gal/yr:	3083.52

Total VMT/year:	8000
Total Ops hrs/yr:	7300
Fuel use, 10^3 gal/yr:	128.48
Total bhp-hr/yr:	2117000

Emissions Factors

Pollutant	gm/VMT	
Nox	2.332	
CO	2.027	
VOC	0.951	
SO2	0.21	lb/10^3 gal
PM10/2.5	0.038	
CO2e	22.51	composite lbs/gal per CCAR, 1/09, Ver 3.1, Tables C.5 and C.6.

Pollutant	gm/bhp-hr	
Nox	0.276	
CO	0.087	
VOC	0.1314	
SO2	0.21	lb/10^3 gal
PM10/2.5	0.0092	

Emissions Estimates-By MWM Type

Pollutant	lbs/hr	lbs/day	lbs/yr	TPY
Nox	0.0456	0.91	333.2	0.167
CO	0.0397	0.79	289.6	0.145
VOC	0.0186	0.37	135.9	0.068
SO2	0.0887	1.77	647.5	0.324
PM10/2.5	0.0007	0.01	5.4	0.003
CO2e				34705

Pollutant	lbs/hr	lbs/day	lbs/yr	TPY
Nox	0.1765	3.53	1288.2	0.644
CO	0.0556	1.11	406.0	0.203
VOC	0.0840	1.68	613.3	0.307
SO2	0.0037	0.07	27.0	0.013
PM10/2.5	0.0059	0.12	42.9	0.021
CO2e				1446

Total Facility Emissions Estimates

Pollutant	lbs/hr	lbs/day	lbs/yr	TPY
Nox	0.222	4.442	1621.300	0.811
CO	0.095	1.906	695.625	0.348
VOC	0.103	2.052	749.132	0.375
SO2	0.092	1.848	674.520	0.337
PM10/2.5	0.007	0.133	48.367	0.024
CO2e				36151

Fugitive Dust Emissions for MWM Activities

PM10, lb/VMT:	0.3
PM2.5, lb/VMT:	0.03

PM10, lb/VMT:	0.17
PM2.5, lb/VMT:	0.02

Emissions Estimates-By MWM Type

Pollutant	lbs/hr	lbs/day	lbs/yr	TPY
PM10	2.663	53.26	19440	9.72
PM2.5	0.266	5.33	1944	0.97

Pollutant	lbs/hr	lbs/day	lbs/yr	TPY
PM10	0.186	3.73	1360	0.68
PM2.5	0.020	0.40	146	0.073

Total Facility Emissions Estimates-Fugitive Dust

Pollutant	lbs/hr	lbs/day	lbs/yr	TPY
PM10	2.85	56.99	20800.00	10.40
PM2.5	0.29	5.73	2090.00	1.05

Table 4.1A-10 Onsite Operations Support Vehicle Emissions

Ref: Riverside County, Emfac 2007, V2.3, Nov 2006
LDTs (1970-2014)

Emissions data on this page is for both power block units, i.e., the entire facility.

Onsite Operations Support Vehicle Use Data

Vehicle Type:	LDT (gasoline)	
# of Vehicles used on facility:	8	
Avg VMT/day/vehicle:	50	
Total daily VMT:	400	
Total Annual VMT:	146000	
% of Annual VMT on unpaved roads:	30	0.30
% of Annual VMT on paved roads:	70	0.70
Annual VMT on unpaved roads:	43800	
Annual VMT on paved roads:	102200	

Emissions Factors (lbs/vmt)

NOx	CO	VOC	SOx	PM10	CO2	
0.000684	0.00677	0.000567	0.00001	0.000107	1.0893	LDT

Daily Emissions (lbs)

NOx	**CO**	**VOC**	**SOx**	**PM10**	**CO2**	**PM2.5**	
0.2736	2.7080	0.2268	0.0040	0.0428	435.7200	0.0424	LDT

Tons per Year

0.0499	0.4942	0.0414	0.0007	0.0078	79.5189	0.0077	LDT

Fugitive Dust Emissions from Onsite Support Vehicle Use

Avg Unpaved road PM10 EF, lbs/VMT:	0.197	(1)
Avg PM2.5 fraction of PM10:	0.212	per CARB CEIDARS, 2011
Avg Unpaved road PM2.5 EF, lbs/VMT:	0.041764	

Unpaved Road Fugitive Emissions

	lbs/day	lbs/yr	TPY
PM10	23.64	8628.6	4.31
PM2.5	5.01	1829.3	0.91

Avg Paved road PM10 EF, lbs/VMT:	0.0009	(1)
Avg PM2.5 fraction of PM10:	0.169	per CARB CEIDARS, 2011
Avg Paved road PM2.5 EF, lbs/VMT:	0.0001521	

Paved Road Fugitive Emissions

	lbs/day	lbs/yr	TPY
PM10	0.25	92.0	0.046
PM2.5	0.04	15.5	0.008

Notes:

1. fugitive dust factors for paved and unpaved roads from PSPP Appendix E.3, Tables E.3-7b and E.3-8c, 2009.
   (assumes unpaved onsite and offsite access roads have been stabilized or watered, and speed is controlled)
   (assumes paved road areas are periodically cleaned and speed is controlled)

Table 4.1A-10 Onsite Operations Support Vehicle Emissions

Ref: Riverside County, Emfac 2007, V2.3, Nov 2006
HDDTs (1970-2014)

Emissions data on this page is for both power block units, i.e., the entire facility.

Onsite Operations Support Vehicle Use Data

			Emissions Factors (lbs/vmt)							
			NOx	CO	VOC	SOx	PM10	CO2		
Vehicle Type:	HDDT (water trucks)		0.020568	0.006521	0.001482	0.000037	0.000958	4.0073	HDDT	
# of Vehicles used on facility:	4									
Avg VMT/day/vehicle:	50				Daily Emissions (lbs)					
Total daily VMT:	200		**NOx**	**CO**	**VOC**	**SOx**	**PM10**	**CO2**	**PM2.5**	
Total Annual VMT:	73000		4.1136	1.3042	0.2964	0.0074	0.1916	801.4600	0.1899	HDDT
% of Annual VMT on unpaved roads:	95	0.95								
% of Annual VMT on paved roads:	5	0.05			Tons per Year					
Annual VMT on unpaved roads:	69350		0.7507	0.2380	0.0541	0.0014	0.0350	146.2665	0.0347	HDDT
Annual VMT on paved roads:	3650									

Fugitive Dust Emissions from Onsite Support Vehicle Use

Avg Unpaved road PM10 EF, lbs/VMT:	0.197	(1)
Avg PM2.5 fraction of PM10:	0.212	per CARB CEIDARS, 2011
Avg Unpaved road PM2.5 EF, lbs/VMT:	0.041764	

Unpaved Road Fugitive Emissions

	lbs/day	lbs/yr	TPY
PM10	37.43	13662.0	6.83
PM2.5	7.94	2896.3	1.45

Avg Paved road PM10 EF, lbs/VMT:	0.0009	(1)
Avg PM2.5 fraction of PM10:	0.169	per CARB CEIDARS, 2011
Avg Paved road PM2.5 EF, lbs/VMT:	0.0001521	

Paved Road Fugitive Emissions

	lbs/day	lbs/yr	TPY
PM10	0.009	3.3	0.0016
PM2.5	0.002	0.6	0.0003

Notes:

1. fugitive dust factors for paved and unpaved roads from PSPP Appendix E.3, Tables E.3-7b and E.3-8c, 2009.
   (assumes unpaved onsite and offsite access roads have been stabilized or watered, and speed is controlled)
   (assumes paved road areas are periodically cleaned and speed is controlled)
2. max water truck speed is 5 mph, at 10 hrs/day, = 50 VMT/day

Table 4.1A-11 Offsite Operations Delivery and Commute Emissions

Ref: Riverside County, Emfac 2007, V2.3, Nov 2006
MDGT and HDDT (1970-2014)

Operations Site Delivery Emissions

Deliveries per Avg Month:	46	
Per trip delivery VMT:	75	
Total monthly VMT:	3450	
Total annual VMT:	41400	
Fraction annual VMT (MDGT):	0.5	
Fraction annual VMT (HDDT):	0.5	Daily VMT*
Annual gasoline VMT:	20700	80
Annual diesel VMT:	20700	80

*Daily VMT based on 260 days/year.

Emissions Factors (lbs/vmt)

NOx	CO	VOC	SOx	PM10	CO2	
0.02057	0.006521	0.001482	0.000037	0.000958	4.0073	HDDT
0.001246	0.00818	0.000772	0.000015	0.000108	1.4979	MDGT

Daily Emissions (lbs)

NOx	**CO**	**VOC**	**SOx**	**PM10**	**CO2**	**PM2.5**	
1.6377	0.5192	0.1180	0.0029	0.0763	319.0427	0.0756	HDDT
0.0992	0.6513	0.0615	0.0012	0.0086	119.2559	0.0085	MDGT

Tons per Year

0.2129	0.0675	0.0153	0.0004	0.0099	41.4756	0.0098	HDDT
0.0129	0.0847	0.0080	0.0002	0.0011	15.5033	0.0011	MDGT

Employee Commute Emissions

Ref: Riverside County, Emfac 2007, V2.3, Nov 2006
LDP/LDT (1970-2014)

# of FTE's:	120
Avg Commute VMT/day roundtrip):	75 (1)
Carpool ratio:	1.2
Avg Daily VMT:	7500
Avg Annual VMT:	2737500

(1) commute from Blythe regional area

Emissions Factors (lbs/vmt)

NOx	CO	VOC	SOx	PM10	CO2
0.00049	0.00548	0.00047	0.00001	0.00009	0.95934

Daily Emissions (lbs)

NOx	CO	VOC	SOx	PM10	CO2
3.68	41.10	3.53	0.08	0.68	7195.05

Tons per Year

NOx	CO	VOC	SOx	PM10	CO2
0.67	7.50	0.64	0.01	0.12	1313.10

Table 4.1A-12

FIXED ROOF TANK EMISSION CALCULATION

Reference: AP-42, Section 7.1, 9/97

Emissions Scenario

X : PTE

: Actual

***** Input *****					
Number of Similar Tanks:	3	Year:	Any		
Stored Substance ID:	Diesel Fuel	Tank Cap.	8000	gallons	
Tank ID:	n/a	Kn =	842.1	* Eq 41	
Vapor Molecular Wt.:	130	Table 6*			
Vapor Pressure (psia):	0.00648	Table 6*			
Tank Diameter (ft):	5	or equivalent diameter if tank is not round			
Tank Height/Length (ft):	16				
Avg. Vapor Space Height (ft):	2				
Avg. Diurnal Temp Change (degF):	28	Table 4 (Phoenix data used to simulate site)*			
Paint Factor:	1				
Small Tank Adj. Factor:	1				
Product Factor:	1	* Section 19.1.2.2.3.3			
Turnover Factor:	0.20				
Throughput (gals/yr):	1200000				

Intermediate Calculations

TP =	1200.00
Q =	0.01
D =	16.19
H =	1.42
T =	5.29

***** Output *****	Single Tank	All Tanks
Uncontrolled Emissions		
Breathing Loss (lb/yr):	1.87	5.62
Working Loss (lb/yr):	4.91	14.72
Total VOC Losses (lb/yr):	6.78	20.34
Controlled Emissions		
Control System Eff. (frac):	0	0
Total VOC Losses (lb/yr):	6.78	20.34
(lb/day):	0.0186	0.0557
(lb/hr):	0.0008	0.0023
(TPY):	0.0034	0.0102

Additional References: *API Bulletin #2518, October 1991

ConVault or equivalent (above ground vault type tanks)

Table 4.1A-13 Palen Source Emissions Summary **2 Pages**

(Before using the values on this table, the notes presented below should be carefully considered.)

	lbs/hr						lbs/day						TPY						
Source	**NOx**	**CO**	**VOC**	**SOx**	**PM10**	**PM2.5**	**NOx**	**CO**	**VOC**	**SOx**	**PM10**	**PM2.5**	**NOx**	**CO**	**VOC**	**SOx**	**PM10**	**PM2.5**	**CO2e**
aux blr 1 high	2.74	4.48	1.34	0.747	1.25	1.25	11.71	27.81	8.24	2.86	4.87	4.87	1.65	2.69	0.808	0.449	0.748	0.748	17550
aux blr 1 low	0.342	4.48	1.31	0.0933	0.156	0.156	0	0	0	0	0	0	0.0992	1.3	0.379	0.0271	0.0451	0.0451	1060
aux blr 1 SU	1.54	4.51	1.32	0.09	0.23	0.23	0	0	0	0	0	0	0.24	0.4	0.12	0.01	0.03	0.03	317
aux blr 2 high	2.74	4.48	1.34	0.747	1.25	1.25	11.71	27.81	8.24	2.86	4.87	4.87	1.65	2.69	0.808	0.449	0.748	0.748	17550
aux blr 2 low	0.342	4.48	1.31	0.0933	0.156	0.156	0	0	0	0	0	0	0.0992	1.3	0.379	0.0271	0.0451	0.0451	1060
aux blr 2 SU	1.54	4.51	1.32	0.09	0.23	0.23	0	0	0	0	0	0	0.24	0.4	0.12	0.01	0.03	0.03	317
ntp blr 1	0.11	0.366	0.054	0.00925	0.05	0.05	1.54	5.12	0.756	0.129	0.7	0.7	0.286	0.892	0.132	0.0225	0.122	0.122	2855
ntp blr 2	0.11	0.366	0.054	0.00925	0.05	0.05	1.54	5.12	0.756	0.129	0.7	0.7	0.286	0.892	0.132	0.0225	0.122	0.122	2855
L-EGS-1	4.72	0.24	0.08	0.04	0.24	0.24	4.72	0.24	0.08	0.04	0.24	0.24	0.47	0.024	0.008	0.0036	0.024	0.024	391.1
L-EGS-2	4.72	0.24	0.08	0.04	0.24	0.24	4.72	0.24	0.08	0.04	0.24	0.24	0.47	0.024	0.008	0.0036	0.024	0.024	391.1
S-EGS	2.6	0.32	0.09	0.001	0.07	0.07	2.6	0.32	0.09	0.001	0.07	0.07	0.259	0.031	0.009	0.0004	0.007	0.007	44.7
L-FP-1	3.53	0.68	0.14	0.007	0.12	0.12	3.53	0.68	0.14	0.007	0.12	0.12	0.352	0.068	0.014	0.0007	0.012	0.012	76
L-FP-2	3.53	0.68	0.14	0.007	0.12	0.12	3.53	0.68	0.14	0.007	0.12	0.12	0.352	0.068	0.014	0.0007	0.012	0.012	76
S-FP	3.53	0.68	0.14	0.007	0.12	0.12	3.53	0.68	0.14	0.007	0.12	0.12	0.352	0.068	0.014	0.0007	0.012	0.012	76
WSAC 1	0	0	0	0	0.015	0.015	0	0	0	0	0.18	0.18	0	0	0	0	0.015	0.015	0
WSAC 2	0	0	0	0	0.015	0.015	0	0	0	0	0.18	0.18	0	0	0	0	0.015	0.015	0
Diesel tanks	0	0	0.0023	0	0	0	0	0	0.0557	0	0	0	0	0	0.0102	0	0	0	0
MWMs Exhaust	0.222	0.095	0.103	0.092	0.007	0.007	4.442	1.906	2.052	1.848	0.133	0.133	0.811	0.348	0.375	0.337	0.024	0.024	36151
MWM Fug Dust	0	0	0	0	2.85	0.29	0	0	0	0	56.99	5.73	0	0	0	0	10.4	1.05	0
LDT Exhaust	0.0114	0.1128	0.00945	0	0.00178	0.00177	0.274	2.708	0.2268	0.004	0.0428	0.0424	0.0499	0.4942	0.0414	0.0007	0.0078	0.0077	79.52
LDT Fug Dust	0	0	0	0	0.9954	0.21	0	0	0	0	23.89	5.05	0	0	0	0	4.36	0.92	0
Water Trks Exhaust	0.1714	0.0543	0.0124	0	0.00798	0.00791	4.114	1.3042	0.2964	0.0074	0.1916	0.1899	0.7507	0.238	0.0541	0.0014	0.035		146.3
Water Trk Fug Dust	0	0	0	0	1.574	0.331	0	0	0	0	37.44	7.94	0	0	0	0	6.84	1.45	0
Max Sum Total	32.50	30.77	8.85	2.07	9.75	5.16	57.96	74.62	21.29	7.94	131.10	31.50	8.42	11.93	3.43	1.37	23.68	5.46	80996

	lbs/hr						lbs/day						TPY						
	NOx	**CO**	**VOC**	**SOx**	**PM10**	**PM2.5**	**NOx**	**CO**	**VOC**	**SOx**	**PM10**	**PM2.5**	**NOx**	**CO**	**VOC**	**SOx**	**PM10**	**PM2.5**	**CO2e**
aux blr 1 high	2.74	4.48	1.34	0.747	1.25	1.25	11.71	27.81	8.24	2.86	4.87	4.87	1.65	2.69	0.808	0.449	0.748	0.748	17550
aux blr 1 low	0.342	4.48	1.31	0.0933	0.156	0.156	0	0	0	0	0	0	0.0992	1.3	0.379	0.0271	0.0451	0.0451	1060
aux blr 1 SU	1.54	4.51	1.32	0.09	0.23	0.23	0	0	0	0	0	0	0.24	0.4	0.12	0.01	0.03	0.03	317
aux blr 2 high	2.74	4.48	1.34	0.747	1.25	1.25	11.71	27.81	8.24	2.86	4.87	4.87	1.65	2.69	0.808	0.449	0.748	0.748	17550
aux blr 2 low	0.342	4.48	1.31	0.0933	0.156	0.156	0	0	0	0	0	0	0.0992	1.3	0.379	0.0271	0.0451	0.0451	1060
aux blr 2 SU	1.54	4.51	1.32	0.09	0.23	0.23	0	0	0	0	0	0	0.24	0.4	0.12	0.01	0.03	0.03	317
ntp blr 1	0.11	0.366	0.054	0.00925	0.05	0.05	1.54	5.12	0.756	0.129	0.7	0.7	0.286	0.892	0.132	0.0225	0.122	0.122	2855
ntp blr 2	0.11	0.366	0.054	0.00925	0.05	0.05	1.54	5.12	0.756	0.129	0.7	0.7	0.286	0.892	0.132	0.0225	0.122	0.122	2855
L-EGS-1	4.72	0.24	0.08	0.04	0.24	0.24	4.72	0.24	0.08	0.04	0.24	0.24	0.47	0.024	0.008	0.0036	0.024	0.024	391.1
L-EGS-2	4.72	0.24	0.08	0.04	0.24	0.24	4.72	0.24	0.08	0.04	0.24	0.24	0.47	0.024	0.008	0.0036	0.024	0.024	391.1
S-EGS	2.6	0.32	0.09	0.001	0.07	0.07	2.6	0.32	0.09	0.001	0.07	0.07	0.259	0.031	0.009	0.0004	0.007	0.007	44.7
L-FP-1	3.53	0.68	0.14	0.007	0.12	0.12	3.53	0.68	0.14	0.007	0.12	0.12	0.352	0.068	0.014	0.0007	0.012	0.012	76
L-FP-2	3.53	0.68	0.14	0.007	0.12	0.12	3.53	0.68	0.14	0.007	0.12	0.12	0.352	0.068	0.014	0.0007	0.012	0.012	76
S-FP	3.53	0.68	0.14	0.007	0.12	0.12	3.53	0.68	0.14	0.007	0.12	0.12	0.352	0.068	0.014	0.0007	0.012	0.012	76
WSAC 1	0	0	0	0	0.015	0.015	0	0	0	0	0.18	0.18	0	0	0	0	0.015	0.015	0
WSAC 2	0	0	0	0	0.015	0.015	0	0	0	0	0.18	0.18	0	0	0	0	0.015	0.015	0
Diesel tanks	0	0	0.0023	0	0	0	0	0	0.0557	0	0	0	0	0	0.0102	0	0	0	0
SCAQMD Base Total	32.09	30.51	8.72	1.98	4.31	4.31	49.13	68.70	18.72	6.08	12.41	12.41	6.81	10.85	2.96	1.03	2.01	2.01	44619

	lbs/hr						lbs/day						TPY						
	NOx	**CO**	**VOC**	**SOx**	**PM10**	**PM2.5**	**NOx**	**CO**	**VOC**	**SOx**	**PM10**	**PM2.5**	**NOx**	**CO**	**VOC**	**SOx**	**PM10**	**PM2.5**	**CO2e**
aux blr 1 high	2.74	4.48	1.34	0.747	1.25	1.25	11.71	27.81	8.24	2.86	4.87	4.87	1.65	2.69	0.808	0.449	0.748	0.748	17550

aux blr 1 low	0.342	4.48	1.31	0.0933	0.156	0.156	0	0	0	0	0	0	0.0992	1.3	0.379	0.0271	0.0451	0.0451	1060
aux blr 1 SU	1.54	4.51	1.32	0.09	0.23	0.23	0	0	0	0	0	0	0.24	0.4	0.12	0.01	0.03	0.03	317
aux blr 2 high	2.74	4.48	1.34	0.747	1.25	1.25	11.71	27.81	8.24	2.86	4.87	4.87	1.65	2.69	0.808	0.449	0.748	0.748	17550
aux blr 2 low	0.342	4.48	1.31	0.0933	0.156	0.156	0	0	0	0	0	0	0.0992	1.3	0.379	0.0271	0.0451	0.0451	1060
aux blr 2 SU	1.54	4.51	1.32	0.09	0.23	0.23	0	0	0	0	0	0	0.24	0.4	0.12	0.01	0.03	0.03	317
ntp blr 1	0.11	0.366	0.054	0.00925	0.05	0.05	1.54	5.12	0.756	0.129	0.7	0.7	0.286	0.892	0.132	0.0225	0.122	0.122	2855
ntp blr 2	0.11	0.366	0.054	0.00925	0.05	0.05	1.54	5.12	0.756	0.129	0.7	0.7	0.286	0.892	0.132	0.0225	0.122	0.122	2855
WSAC 1	0	0	0	0	0.015	0.015	0	0	0	0	0.18	0.18	0	0	0	0	0.015	0.015	0
WSAC 2	0	0	0	0	0.015	0.015	0	0	0	0	0.18	0.18	0	0	0	0	0.015	0.015	0
SCAQMD Offset Total	9.46	27.67	8.05	1.88	3.40	3.40	26.50	65.86	17.99	5.98	11.50	11.50	4.55	10.56	2.88	1.02	1.92	1.92	43564
SCAQMD 30DA							27.38	68.06	18.59	6.18	11.88	11.88							
			lbs/hr						lbs/day							TPY			
	NOx	**CO**	**VOC**	**SOx**	**PM10**	**PM2.5**	**NOx**	**CO**	**VOC**	**SOx**	**PM10**	**PM2.5**	**NOx**	**CO**	**VOC**	**SOx**	**PM10**	**PM2.5**	**CO2e**
aux blr 1 high	2.74	4.48	1.34	0.747	1.25	1.25	11.71	27.81	8.24	2.86	4.87	4.87	1.65	2.69	0.808	0.449	0.748	0.748	17550
aux blr 1 low	0.342	4.48	1.31	0.0933	0.156	0.156	0	0	0	0	0	0	0.0992	1.3	0.379	0.0271	0.0451	0.0451	1060
aux blr 1 SU	1.54	4.51	1.32	0.09	0.23	0.23	0	0	0	0	0	0	0.24	0.4	0.12	0.01	0.03	0.03	317
aux blr 2 high	2.74	4.48	1.34	0.747	1.25	1.25	11.71	27.81	8.24	2.86	4.87	4.87	1.65	2.69	0.808	0.449	0.748	0.748	17550
aux blr 2 low	0.342	4.48	1.31	0.0933	0.156	0.156	0	0	0	0	0	0	0.0992	1.3	0.379	0.0271	0.0451	0.0451	1060
aux blr 2 SU	1.54	4.51	1.32	0.09	0.23	0.23	0	0	0	0	0	0	0.24	0.4	0.12	0.01	0.03	0.03	317
ntp blr 1	0.11	0.366	0.054	0.00925	0.05	0.05	1.54	5.12	0.756	0.129	0.7	0.7	0.286	0.892	0.132	0.0225	0.122	0.122	2855
ntp blr 2	0.11	0.366	0.054	0.00925	0.05	0.05	1.54	5.12	0.756	0.129	0.7	0.7	0.286	0.892	0.132	0.0225	0.122	0.122	2855
L-EGS-1	4.72	0.24	0.08	0.04	0.24	0.24	4.72	0.24	0.08	0.04	0.24	0.24	0.47	0.024	0.008	0.0036	0.024	0.024	391.1
L-EGS-2	4.72	0.24	0.08	0.04	0.24	0.24	4.72	0.24	0.08	0.04	0.24	0.24	0.47	0.024	0.008	0.0036	0.024	0.024	391.1
S-EGS	2.6	0.32	0.09	0.001	0.07	0.07	2.6	0.32	0.09	0.001	0.07	0.07	0.259	0.031	0.009	0.0004	0.007	0.007	44.7
L-FP-1	3.53	0.68	0.14	0.007	0.12	0.12	3.53	0.68	0.14	0.007	0.12	0.12	0.352	0.068	0.014	0.0007	0.012	0.012	76
L-FP-2	3.53	0.68	0.14	0.007	0.12	0.12	3.53	0.68	0.14	0.007	0.12	0.12	0.352	0.068	0.014	0.0007	0.012	0.012	76
S-FP	3.53	0.68	0.14	0.007	0.12	0.12	3.53	0.68	0.14	0.007	0.12	0.12	0.352	0.068	0.014	0.0007	0.012	0.012	76
WSAC 1	0	0	0	0	0.015	0.015	0	0	0	0	0.18	0.18	0	0	0	0	0.015	0.015	0
WSAC 2	0	0	0	0	0.015	0.015	0	0	0	0	0.18	0.18	0	0	0	0	0.015	0.015	0
Diesel tanks	0	0	0.0023	0	0	0	0	0	0.0557	0	0	0	0	0	0.0102	0	0	0	0
PSD Total	32.09	30.51	8.72	1.98	4.31	4.31	49.13	68.70	18.72	6.08	12.41	12.41	6.81	10.85	2.96	1.03	2.01	2.01	44619

Notes:

Hourly Values

1. this table does not account for the run "spacing" of the various IC engines, i.e., only one engine is run in any hour.
2. for each aux boiler, it should be noted that you cannot have a SU/low load hour and a full load hour at the same time.

Daily Values

3. this table assumes that all the IC engines are run for readiness/maintenance testing on the same day.
4. this table assumes each aux boiler has one cold start per day, with all other transient starts at warm conditions (i.e., a low load hour for emissions purposes).
5. for SCAQMD 30 DA, the maximum days per month is 31.

Annual Values

6. annual values incorporate all operating modes.

Table 4.1A-14 Palen Solar - Commissioning Activity Emisisons Estimates

Assumptions:

1. no commissioning activity for the various stationary diesel engines is required.
2. no commissioning activity for the various mobile site support vehicles is required.
3. no commissioning activity will be required for the WSACs
4. commissioning activities will be confined to the Aux and NTP boilers

Commissioning Schedule:

Aux Boilers (each):

4 hours (cold start mode)
4 hours (warm start mode)
12 hours (at low load-25%)
12 hours (at medium load-50%)
8 hours (at high load-100%)
Total hours: 40

1. for startups (cold or warm) use SU emissions factors
2. for low loads<=25% use the low load emissions factors.
3. for loads >25%, use the 25-100% load emissions factors.
4. assume 31.1 mmbtu/hr for SU
3. assume 63 mmbtu/hr for low load hours (<=25%)
4. assume 125 mmbtu/hr for medium load hours (50%)
5. Assume 249 mmbut/hr for high load hours (100%)

Emissions Factors:

Pollutant	SU	Low load	High Load	
Nox	0.088	0.011	0.011	lb/mmbtu
CO	0.146	0.144	0.018	lb/mmbtu
VOC	0.043	0.042	0.0054	lb/mmbtu
SOx	0.003	0.003	0.003	lb/mmbtu
PM10/2.5	0.01	0.005	0.005	lb/mmbtu

Calculated heat input during commissioning period:

SU:	249	mmbtu/period
Low load:	756	mmbtu/period
Medium load:	1500	mmbtu/period
High load:	1992	mmbtu/period
Total	4497	mmbtu/period

Commissioning Emissions for One Plant:

Emissions per Period, lbs

	Nox	CO	VOC	SOx	PM10/2.5
SU	21.89	36.32	10.70	0.75	2.49
Low Load	8.32	108.86	31.75	2.27	3.78
Med Load	16.50	27.00	8.10	4.50	7.50
High Load	21.91	35.86	10.76	5.98	9.96
Total	68.62	208.04	61.31	13.49	23.73

Commissioning Emissions for Two Plants:

Nox	CO	VOC	SOx	PM10/2.5
137.2448	416.0896	122.6144	26.9808	47.456

Total All Boiler Commissioning Emissions:

LBS per Period

Nox	CO	VOC	SOx	PM10/2.5	CO2e
140	424	130	28	49	540309
					270.2 tons

Commissioning Schedule:

NTP Boilers (each):

4 hours (cold start mode)
4 hours (at low load-25%)
6 hours (at medium load-50%)
6 hours (at high load-100%)
Total hours: 20

1. use high load emissions factors for all hours
2. assume 2.5 mmbtu/hr for low load and SU hours (25%)
3. assume 5 mmbtu/hr for medium load hours (50%)
4. assume 10 mmbtu/hr for high load hours (100%)

Emissions Factors:

Pollutant	High Load	
Nox	0.011	lb/mmbtu
CO	0.036	lb/mmbtu
VOC	0.033	lb/mmbtu
SOx	0.003	lb/mmbtu
PM10/2.5	0.005	lb/mmbtu

Calculated heat input during commissioning period:

Low load:	20	mmbtu/period
Medium load:	30	mmbtu/period
High load:	60	mmbtu/period
Total	110	mmbtu/period

Commissioning Emissions for One Plant:

Emissions per Period, lbs

Nox	CO	VOC	SOx	PM10/2.5
1.21	3.96	3.63	0.33	0.55

Commissioning Emissions for Two Plants:

Nox	CO	VOC	SOx	PM10/2.5
2.42	7.92	7.26	0.66	1.1

Cumulative CO2e EF: 117.285 lbs/mmbtu

Attachment 4.1A-1

System Operational Support Data

Palen - West / East Field

12/6/2012

Summary Emissions Calculations: Annual Emissions

Equipment	Total Number of Units	Size/Rating	Adjusted rating (average)		Operating Hours/yr	Average Operating Hours/d	Emissions, tons per year						
							NOx	SO2	CO	VOC	PM10	PM2.5	GHG
Auxiliary boiler													
1) for SRSG warm&cooling/ Turbine Boosting mode	2	249		MMBtu/hr	1202	3.5	1.7	0.5	2.8	0.8	0.8	0.8	18,017
2) during Aux boiler warm startup ~12.5% MCR load	2	249	31.13	MMBtu/hr	580	1.7	0.1	0.0	1.0	0.3	0.1	0.1	840
Nighttime boilers (1) (2)	2	10		MMBtu/hr	4872		0.3	0.1	0.9	0.8	0.1	0.1	2,833
Power Plant Emergency engines	2	2500		kW	200		4.3	0.0	0.3	0.1	0.0	0.0	375
Common area emergency engine	1	250		kW	200		0.3	4.0E-03	0.03	0.01	0.01	0.01	41
Fire pump engines	3	200		hp	200		0.11	2.0E-03	0.07	0.01	0.01	0.01	21
WSACs	2	4000		gpm	2000	12	-	-	-	-	0.03	0.03	-
Total							12.7	1.2	12.2	5.8	2.1	2.1	39002.9
Threshold													

Total annual natural gas use	732,141	MMBtu/yr	366,071	calculated per plant	364,216	by model for West Plant	370,981	by model for East Plant
Total annual Diesel use	11,043	MMBtu/yr			225,336	for start-up/cool-dowm/nightwatch	225,814	for start-up/cool-dowm/nightwatch
					138,880	For MWe	145,167	For MWe

1. NPB (night time boiler)- 13 hours (annual average) of normal operation at full load during night plus 1 hour startup
2. NPB startup emission level is not considered

An assumption is that lb/hr emission rate during startup is the same as full load for both aux boiler and NPB. Actual startup duration is 20-40 min (depends on boiler's drum temperature)

Total	365	days/yr
Days of operation (SRSG start-ups)	348	days/yr
Cloudy days/ plant maintenance	17	days/yr

Auxiliary Boiler MOO	Boiler Load, %	Adjusted for partial load MMBTU/hr	Days with Boosting Mode (Solar Boiler operation ~ 11 hr)		Days - without Boosting Mode (Solar Boiler operation ~ 7 hr)		300 days Days with Boosting Mode		48 days Days - without Boosting Mode	
			Schedule	Equivalent Duration, min	Schedule	Equivalent Duration, min	hr/year	MMBTU/yr	hr/year	MMBTU/yr
Aux Boiler startup from warm standby	12.5	31.1	5:20 - 6:00	40.0	7:20 - 8:00	40.0	200.0	6,225	32.0	996
Solar Boiler Piping heating (morning) with aux boiler steam	90	224.1	6:00 - 7:00	60.0	8:00 - 9:00	60.0	300.0	67,230	48.0	10,757
Aux Boiler bottled up/warm stand by	0		7:00-12:10		9:00-12:10					
Aux Boiler startup from warm standby	12.5	31.1	12:10-12:30	30.0	12:10-12:30	30.0	150.0	4,669	24.0	747
Aux Boiler bottled up/warm stand by	0		12:30-14:30		12:30-15:40					
Aux Boiler startup from warm standby	12.5	31.1	14:30 -15.00	30.0			150.0	4,669		
IP turbine boosting mode (aux boiler)	50	124.5	15:30 - 16.00	30.0			150.0	18,675		
total - hours/year	100	249.0	16:00 - 17:30	90.0			450.0	112,050		
750.0	80	199.2	17:30 - 18:00	30.0			150.0	29,880		
Aux Boiler startup from warm standby	12.5	31.1			15:40-16:00	30.0			24.0	747
Solar Boiler Piping cooling (evening) with aux boiler steam	70	174.3	18:00 - 19:00	60.00	16:00 - 17:00	60.0	300.0	52,290	48.0	8,366
								295,688		**21,613**

Type of startup	Turbine shutdown period	Startups/ year
Very Cold startup	~ 80 hours	3
Cold startup	~ 36 hours	10
Warm startup (daily start-up)	~ 12 hours	210
Warm startup (daily start-up, winter)	~ 16 hours	125
		348

Aux Boiler Operation at 12.5% load (high emission)	580	hr/yr	1.7 hours/day (eq)@31.1 MMBtu/hr
Aux Boiler Operation at 25-100%MCR	1446.0	hr/yr	3.5 hours/day (eq)@249MMBtu/hr
Aux Boiler Operation at 25-100%MCR (average, equiv to full load of operation)	**1202.0**	**hr/yr**	
Total annual natural gas use (not incl NPB and 12.5 % Aux boiler operation)	299,248	MMBTU/yr	
Adjusted Aux Boiler rating (SRSG warm&cooling/ Boosting mode)	207	MMBtu/hr (equiv) if use 1446 hr operation at diff loads	

Palen - 250 MW - East Field

UPDATE -06-Dec-2012

Operation Hours

Auxiliary Boiler	Auxiliary Boiler MOO	Boiler Load, %	Adjusted for partial load MMBTU/hr	Days with Boosting Mode Solar Boiler operation ~ 11 h Schedule	Equivalent Duration, min	Days - without Boosting Mod Solar Boiler operation ~ 7 h Schedule	Equivalent Duration, min
SU	Aux Boiler startup from warm standby	12.5	31.1	5:20 - 6:00	40.0	7:20 - 8:00	40.0
	Solar Boiler Piping heating (morning) with aux boiler st	90	224.1	6:00 - 7:00	60.0	8:00 - 9:00	60.0
	Aux Boiler bottled up/warm stand by	0		7:00-12:10		9:00-12:10	
	Aux Boiler startup from warm standby	12.5	31.1	12:10-12:30	20.0	12:10-12:30	20.0
	Aux Boiler bottled up/warm stand by	0		12:30-14:30		12:30-15:40	
	Aux Boiler startup from warm standby	12.5	31.1	14:30 -15.00	20.0		
	IP turbine boosting mode (aux boiler)	50	124.5	15:30 - 16.00	30.0		
	total - hours/year	100	249.0	16:00 - 17:30	90.0		
	717.5	80	199.2	17:30 - 18:00	30.0		
	Aux Boiler startup from warm standby	12.5	31.1			15:40-16:00	20.0
	Solar Boiler Piping cooling (evening) with aux boiler ste	70	174.3	18:00 - 19:00	60.00	16:00 - 17:00	60.0
NPB	Night Preservation	100	10	19:00 - 06:00	660.00	17:00 - 08:00	900.0

Days of operation (SRSG start-ups)	348	days/yr
Days with Boosting Mode	300	days/yr
Days - without Boosting Mode	48	days/yr

Annual gas consumption

Auxiliary Boiler	Description	Total (HHV) MWth	Total Gas Use (HHV) MMBtu	Operation Hours hrs
SU	Start-Up	22,344	94,122	812
SU	Cool-Down	21,162	89,142	348
SU	IP turbine boosting mode	34,462	145,167	750
NPB	Nightwatch	10,101	42,550	4,020
			370,981	

Annual gas consumption

Palen East Field	ELECTRICAL OUTPUT, MWhe TOTAL	Gas Use, HHV Nightwatch (MMBtu)	Start-Up (MMBtu)	CoolDown (MMBtu)	Electrical Generation (MMBtu)	
January	46,836	4,450	7,968	7,719	4,542	
February	42,665	3,220	7,221	6,225	6,154	
March	63,277	3,520	7,719	7,470	8,400	
April	63,326	3,380	8,217	7,470	9,072	
May	73,171	3,140	8,715	7,719	8,321	
June	76,452	2,880	7,470	7,470	24,528	
July	68,824	3,250	7,968	7,719	21,822	
August	67,266	3,440	7,968	7,719	21,769	
September	63,439	3,530	7,470	7,470	17,638	
October	56,286	3,810	8,715	7,719	9,023	
November	50,844	4,060	7,470	7,470	7,229	
December	34,712	3,870	7,221	6,972	6,669	
	707,098	42,550	94,122	89,142	145,167	370,981

Annual Average Electricity Production

Plant	Capacity (Nominal MW, net)	No. of Heliostats (maximum)	Annual Production (MWh, Net) Solar Boiler (SRSG)	Nat. Gas Boiler (*)	Total	Annual Production (MWh, Gross)
Solar Plant 2 – East Field	250 MW	85,000	701,800	5,300	707,100	784,000
				0.75%		

(*) Contribution to Electricity Production

PB efficiency	27%		
Total electrical output	707,098	MWhe	

Gas Use [% of electrical contribution, design Point storage eff.]		Total MWth	Total MWhe
Gas for Start-Up	0.9%	22,344	6,033
Gas for CoolDown	0.8%	21,162	5,714
Gas for MWe	1.3%	34,462	9,305
Gas for Night Preservation	0.4%	10,101	2,727

Ambient Temperature	Number of Hours of Operation by Actual Load (Solar & Storage) MWt & Temperature 0-112	112-225	225-281	281-422	422-450	450-506	506-562	562-633	TOTAL
-1 - 12°C	0	5	27	17	20	7	5	64	145
12 - 20oC	0	8	36	39	45	43	44	395	610
20 - 28oC	0	5	35	52	60	43	91	615	901
28 - 36oC	0	1	14	33	54	47	91	643	883
36 - 40oC	0	0	1	10	16	23	21	270	341
40 - 42oC	0	0	2	6	12	10	20	181	231
42 - 44oC	0	0	0	4	7	17	9	167	204
44 - 48°C	0	0	0	0	5	4	7	149	165
TOTAL HRS	0	19	115	161	219	194	288	2,484	3,480

Palen - 250 MW - West Field

UPDATE -06-Dec-2012

Operation Hours

Auxiliary Boiler	Auxiliary Boiler MOO	Boiler Load, %	Adjusted for partial load MMBTU/hr	Days with Boosting Mode (Solar Boiler operation ~ 11 hr) Schedule	Equivalent Duration, min	Days - without Boosting Mode (Solar Boiler operation ~ 7 hr) Schedule	Equivalent Duration, min
	Aux Boiler startup from warm standby	12.5	31.1	5:20 - 6:00	40.0	7:20 - 8:00	40.0
	Solar Boiler Piping heating (morning) with aux boiler stear	90	224.1	6:00 - 7:00	60.0	8:00 - 9:00	60.0
	Aux Boiler bottled up/warm stand by	0		7:00-12:10		9:00-12:10	
	Aux Boiler startup from warm standby	12.5	31.1	12:10-12:30	20.0	12:10-12:30	20.0
	Aux Boiler bottled up/warm stand by	0		12:30-14:30		12:30-15:40	
SU	Aux Boiler startup from warm standby	12.5	31.1	14:30 -15.00	20.0		
	IP turbine boosting mode (aux boiler)	50	124.5	15:30 - 16.00	30.0		
	total - hours/year	100	249.0	16:00 - 17:30	90.0		
	717.5	80	199.2	17:30 - 18:00	30.0		
	Aux Boiler startup from warm standby	12.5	31.1			15:40-16:00	20.0
	Solar Boiler Piping cooling (evening) with aux boiler steam	70	174.3	18:00 - 19:00	60.00	16:00 - 17:00	60.0
NPB	Night Preservation	100	10	19:00 - 06:00	660.00	17:00 - 08:00	900.0

Days of operation (SRSG start-ups)	348	days/yr
Days with Boosting Mode	300	days/yr
Days - without Boosting Mode	48	days/yr

Annual gas consumption

Auxiliary Boiler	Description	Total (HHV) MWth	Total Gas Use (HHV) MMBtu	Operation Hours hrs
SU	Start-Up	22,226	93,624	812
SU	Cool-Down	21,162	89,142	348
SU	IP turbine boosting mode	32,970	138,880	750
NPB	Nightwatch	10,106	42,570	4,020
			364,216	

Annual gas consumption

Palen West Field	ELECTRICAL OUTPUT, MWhe TOTAL	Gas Use, HHV Nightwatch (MMBtu)	Start-Up (MMBtu)	CoolDown (MMBtu)	Electrical Generation (MMBtu)	
January	46,300	4,450	7,968	7,719	4,483	
February	42,514	3,220	7,221	6,225	5,989	
March	63,115	3,520	7,719	7,470	7,788	
April	63,174	3,400	7,719	7,470	8,416	
May	73,139	3,140	8,715	7,719	7,528	
June	76,419	2,880	7,470	7,470	22,623	
July	68,871	3,250	7,968	7,719	21,393	
August	67,282	3,440	7,968	7,719	20,751	
September	63,427	3,530	7,470	7,470	18,035	
October	55,993	3,810	8,715	7,719	8,365	
November	50,531	4,060	7,470	7,470	7,135	
December	34,419	3,870	7,221	6,972	6,374	
	705,184	42,570	93,624	89,142	138,880	364,216

Annual Average Electricity Production

Plant	Capacity (Nominal MW, net)	No. of Heliostats (maximum)	Annual Production (MWh, Net) Solar Boiler (SRSG)	Nat. Gas Boiler (*)	Total
Solar Plant 1 – West Field	250 MW	85,000	700,100	5,100	705,200
				0.72%	

(*) Contribution to Electricity Production

Annual Production (MWh, Gross)
781,400

PB efficiency	26%		
Total electrical output	705,184	MWhe	

Gas Use [% of electrical contribution, design Point storage eff.]		Total MWth	Total MWhe
Gas for Start-Up	0.8%	22,226	5,801
Gas for CoolDown	0.8%	21,162	5,523
Gas for MWe	1.2%	32,970	8,605
Gas for Night Preservation	0.4%	10,106	2,638

Ambient Temperature	Number of Hours of Operation by Actual Load (Solar & Gas) MWt & Temperature 0-17	17-105	105-193	193-281	281-370	370-458	458-546	546-634	TOTAL
-1 - 12°C	0	6	29	21	12	6	13	53	140
12 - 20oC	0	5	35	41	46	36	53	386	602
20 - 28oC	0	2	38	52	54	44	102	603	895
28 - 36oC	0	1	15	31	53	46	86	649	881
36 - 40oC	0	0	1	10	15	21	26	268	341
40 - 42oC	0	0	2	3	13	12	17	184	231
42 - 44oC	0	0	0	4	2	21	9	168	204
44 - 48°C	0	0	0	0	3	6	3	153	165
TOTAL HRS	0	14	120	162	198	192	309	2,464	3,459

Aux Boilers Summery

12/6/2012

Aux Boiler (25%-100% Load)

Emissions Calculations: 249 MMBtu/hr boilers
Boilers: 1 units total/plant

Pollutant	Emission Rate	
	ppmvd @ 3% O_2	lb/MMBtu
NO_x	9	0.011
SO_2 *	1.7	0.003
CO	25	0.018
VOC	12.6	0.0054
PM10**	--	0.005
PM2.5**	--	0.005
	kg/MMBtu	GWP
CO2 (3)	52.870	1
CH4 (4)	9.00E-04	21
N2O (4)	1.00E-04	310
CO2e		

0.005 lb PM/MMBtu (per NG-fired gas turbine test results)
* Based on maximum natural gas sulfur content of 0.75 grains/100 scf.
** Based on natural gas-fired gas turbine test results

Aux Boiler (12.5% Load)

Emissions Calculations: 31.1 MMBtu/hr boilers
Boilers: 1 units total/plant

Pollutant	Emission Rate	
	ppmvd @ 3% O_2	lb/MMBtu
NO_x	9	0.011
SO_2 *	1.7	0.003
CO	25	0.144
VOC	12.6	0.042
PM10**	--	0.005
PM2.5**	--	0.005
	kg/MMBtu	GWP
CO2 (3)	52.870	1
CH4 (4)	9.00E-04	21
N2O (4)	1.00E-04	310
CO2e		

0.005 lb PM/MMBtu (per NG-fired gas turbine test results)
* Based on maximum natural gas sulfur content of 0.75 grains/100 scf.
** Based on natural gas-fired gas turbine test results

Nighttime Boilers

Emissions Calculations: 10 MMBtu/hr boilers
Boilers: 1 units total/plant

Pollutant	Emission Rate	
	ppmvd @ 3% O_2	lb/MMBtu
NO_x	9	0.011
SO_2 *	1.7	0.003
CO	50	0.036
VOC	10	0.033
PM10**	--	0.0000
PM2.5**	--	0.0000
	kg/MMBtu	GWP
CO2 (3)	52.870	1
CH4 (4)	9.00E-04	21
N2O (4)	1.00E-04	310
CO2e		

0.005 lb PM/MMBtu (per NG-fired gas turbine test results)
* Based on maximum natural gas sulfur content of 0.75 grains/100 scf.
** Based on natural gas-fired gas turbine test results

Emissions from Mirrors Cleaning Activities

12/6/2012

FFT MWM Operation: assume 2013 MY onroad-certified engine

Cleaning operations occur: 365 days/y
20 hr/day average

310 HP (each)
17.6 gal fuel/hr per FFT MWM
352 gal fuel/day per FFT MWM
2,700 VMT/y per FFT MWM

Number of Vehicles per Plant:
West / East Field 12

Pollutant	Emission Factor	Units
NO_x	2.332	g/mi
SO_2	0.21	lb/1000 gal
CO	2.027	g/mi
VOC	0.951	g/mi
PM10/PM2.5 (combustion)	0.038	g/mi
PM10 (road dust)	0.3	lb/VMT
PM2.5 (road dust)	0.03	lb/VMT

NT MWM Operation: assume Tier 4 certified nonroad engine

Cleaning operations occur: 365 days/y
20 hr/day average

145 HP (each)
8.8 gal fuel/hr per NT MWM
176 gal fuel/day per NT MWM
4,000 VMT/y per NT MWM

Number of Vehicles per Plant:
West / East Field 1

Pollutant	Emission Factor	Units
NO_x	0.276	g/bhp-hr
SO_2	0.21	lb/1000 gal
CO	0.087	g/bhp-hr
VOC	0.1314	g/bhp-hr
PM10/PM2.5 (combustion)	0.0092	g/bhp-hr
PM10 (road dust)	0.17	lb/VMT
PM2.5 (road dust)	0.02	lb/VMT

WSACs 12/6/2012

Typical Worst-Case Design Parameters	
Water Flow Rate, 10E6 lbm/hr	2.00
Water Flow Rate, gal/min	**4000**
Drift Rate, %	0.0005
Drift, lbm water/hr	10.00
PM10 Emissions based on TDS Level	
TDS level, ppm	1500
PM10, lb/hr	0.015
PM10, lb/day	0.180
PM10, tpy	0.015

Based on 2000 hrs/yr
12 hrs/day

Attachment 4.1A-2

Auxiliary Boiler Specifications

BrightSource

Table of Contents

1. INTRODUCTION 3

2. STARTUP AUXILIARY BOILER 4

3. AUXILIARY NIGHT PRESERVATION BOILER 5

~~4. AUXILIARY ISH ..... 6~~ N/A

5. OPERATION & EMISSIONS 7

List of Figures

Figure 1: Natural Gas Consumption During June-September (Representative Day) – w/o TES ... 9

Figure 2: Natural Gas Consumption During October-May (Representative Day) – w/o TES 9

Figure 3: Natural Gas Consumption During June-September (Representative Day) – w/ TES ... 10

Figure 4: Natural Gas Consumption During October-May (Representative Day) – w/ TES 11

List of Tables

Table 1: Auxiliary Start-up Boiler Steam Parameters 4

Table 2: NPB & Electrical Superheater Steam Parameters* 5

~~Table 3: Auxiliary ISH – Steam Parameters ..... 6~~

Table 4: Number of Operation Hours of Start-up/ NPB Auxiliary Boilers – w/o TES 7

Table 5: Number of Operation Hours of Start-up/ NPB / ISH Auxiliary Boilers – w/ TES 7

Table 6: Start-up Boiler's Maximum Emissions 8

Table 7: Expected Natural Gas Consumption Pattern – 250MW Plant w/o TES 8

Table 8: Expected Natural Gas Consumption Pattern – 250MW Plant w/ TES 10

1. INTRODUCTION

This document describes the auxiliary boilers used in the 250MW Subcritical Solar Thermal Power Plant System:

- Start-up boiler
- Night preservation boiler
- ~~Auxiliary ISH (Independent Super Heater)~~

Auxiliary Boiler Description	250 MW Plant w/o TES	250 MW Plant w/ TES
Start-up boiler	Included	Included
NPB	Included	Included
~~ISH~~		~~Included~~ N/A

Definitions & Abbreviations

Definitions	
ACC	Air Cooled Condenser
BFP	Boiler Feed Pump
BFPT	Boiler Feed Pump Turbine
ISH	Independent Superheater
MBFP	Main Boiler Feed Pump
MCR	Maximum Continuous Rating
NPB	Night Preservation Boiler
SH	Superheater
SRSG	Solar Receiver Steam Generator
STG	Steam Turbine-Generator

2. STARTUP AUXILIARY BOILER

This auxiliary boiler will be used during the morning start-up cycle before the sun rises to preheat the superheater (SH) panels and the piping of the Solar Receiver Steam Generator (SRSG) so that solar flux will maximize output in minimal time. It is also used for: SRSG hot restart; to provide augmentation steam during the few expected cloudy days; or to boost the turbine to increase the power output.

This auxiliary boiler will provide auxiliary steam to the gland systems during the plant start-up, and to the Main Boiler Feed Pump (MBFP) turbine when the turbine extraction steam is not available.

Table 1: Auxiliary Start-up Boiler Steam Parameters

Steam	Capacity (249 MMBtu/hr)		Operating Temperature		Operating Pressure	
	kg/sec	lbs/hr	°C	°F	bara	psia
Superheated	~ 23.3 (1)	~ 185,000	410	770	~45	~650

Note: The boiler steam flow (~ 21 to 24 kg/s) will vary depending on the temperature in the deaerator (~ 150 to 187°C).

The startup auxiliary boiler and its blowdown system will be designed to produce steam quality that meets the turbine steam quality requirements.

The auxiliary boiler feed pump (BFP) will supply spray water to the SRSG auxiliary steam attemperation stations during the SRSG cold/warm startup and hot restart.

The auxiliary BFPs shall have enough capacity to feed both the auxiliary boiler and auxiliary steam attemperators at 100% maximum continuous rating (MCR) if spray water is required for processes external to the auxiliary boiler.

Adequate thermal insulation and a flue gas isolation damper shall be provided to reduce heat loss when the boiler is in standby mode.

The boiler subsystems will include start-up bypasses to the air cooled condenser (ACC), de-superheater stations, and associated piping, valves, and instruments.

3. AUXILIARY NIGHT PRESERVATION BOILER

The Night Preservation Boiler (NPB) will be a standard commercial packaged boiler that produces superheated steam, with a separate, standalone electric heater for further steam superheating. The NPB will provide superheated steam to the steam turbine-generator (STG) and boiler feed pump turbine (BFPT) gland systems overnight and during other shutdown periods when steam is not available from the SRSG and startup auxiliary boiler. The NPB will also provide pegging steam (saturated) to the deaerator during these shutdowns.

The electrical gland steam superheater installed downstream of the NPB will allow adjustment of the gland steam temperature in accordance with the STG metal temperature.

The boiler and electrical superheater steam parameters are specified in Table 2.

Table 2: NPB & Electrical Superheater Steam Parameters*

Steam	Capacity (10 MMBtu/hr)		Operating Temperature		Operating Pressure	
	kg/sec	lbs/hr	°C	°F	bara	psia
NPB Outlet	~ 1.3	~ 10,000	260	500	~12	~175
Electrical SH Outlet	~ 0.63	~ 5,000	400	752	~12	~175

Note: (*) The actual figures (flow, temperature and pressure) shall be determined on the basis of the STG and BFPT Manufacturers' data

The NPB boiler and its blowdown system will be designed to produce steam quality that meets the turbine steam quality requirements.

The NPB shall have its own deaerator. A dedicated chemical injection skid shall be provided for dosing amine and oxygen scavenger to feedwater of the NPB.

5. OPERATION & EMISSIONS

The boilers will be provided with ultra-low-NOx burners and flue gas recirculation to minimize NOx emissions.

Table 4: Number of Operation Hours of Start-up/ NPB Auxiliary Boilers – w/o TES

Boiler Operation	For Plant Startup /Shutdown Cooling	For Power Generation (Boosting mode)	Nighttime	Notes
Start-up Boiler	~ 800 hr/year	~ 900 hr/year		Equivalent to full load
	~ 2 hr/day	~ 3 hr/day		
NPB			~ 12 hr/day in summer ~ 16 hr/day in winter	Equivalent to full load
			~ 5,000 hr/year	

Table 5: Number of Operation Hours of Start-up/ NPB / ISH Auxiliary Boilers – w/ TES

Boiler Operation	For Plant Startup /Shutdown Cooling	For TES Discharge mode	Nighttime	Notes
Start-up Boiler	~ 800 hr/year			Equivalent to full load
	~ 2 hr/day			
NPB			~ 12 hr/day in summer ~ 16 hr/day in winter	Equivalent to full load
			~ 5,000 hr/year	
~~ISH~~		~~~ 2 hr/day~~		~~Equivalent to full load~~
		~~ 800 hr/year~~		

The emission limits for the auxiliary boilers throughout the turndown range (normal operation) are expected to be as shown in Table 6.

Table 6: Start-up Boiler's Maximum Emissions

Pollutant	Auxiliary Boiler	
	ppmvd @ 3% O2	lb/MMBtu
NOx	9.0	0.011
SO2*	1.7	0.0021
CO	25	0.018
VOC	12.6	0.0054
PM10	N/A	0.005

* Based on maximum natural gas sulfur content of 0.75 grains/100 scf.

The NPB shall be designed for 9 ppmvd NOx and 50 ppmvd CO.

The ISH aux. boiler's emissions – TBD

Table 7 and Figures 1 and 2 represent an approximation of the expected natural gas consumption pattern for 250MW Plant w/o TES.

Table 7: Expected Natural Gas Consumption Pattern – 250MW Plant w/o TES

Hour	01-04	05	06	07	08	09-10	11	12	13	14	15	16	17	18	19-24
June-September, MMBtu/hr	10	35	150	0	0	0	25	0	0	25	65	249	65	150	10
October-May, MMBtu/hr	10	10	10	35	150	0	0	25	0	0	25	150	10	10	10

Attachment 4.1A-3

IC Engine Specifications

TABLE OF CONTENTS

SECTION **PAGE**

Tables:

1 Equipment List and Ratings

2 Emergency Diesel Generators

3 Diesel Fire Pumps

Attachments:

1 0-ELV-GEN-001, Emergency Diesel Generator, Common Area, Datasheet

2 1-EMV-GEN-001 & 2-EMV-GEN-001, Emergency Diesel Generators, Power Blocks 1 & 2, Datasheet

3 0-FP-CP-001, Diesel Fire Pump, Common Area, Datasheet

4 1-FP-CP-001 & 2-FP-CP-001, Diesel Fire Pump, Power Blocks 1 & 2, Datasheet

5 Drawing C-1000, Revision D, Civil Overall Site Plan

6 Drawing P-1000A, Revision 3, Equipment Arrangement Plan, 250 MW Power Block #2 with Thermal Storage

7 Drawing P-1000B, Revision 3, Equipment arrangement Plan 250 MW Power Block #1 No Thermal Storage

8 Drawing P-1001, Revision 2, Equipment Arrangement Plan, Common Area

Copyright © 2012 CH2M HILL

TABLE 1
Equipment List and Ratings

Equipment Number	Description	Equipment Rating
0-ELV-GEN-001	Emergency Diesel Generator, Common Area	250 eKW, 480 VAC
1- EMV-GEN-001	Emergency Diesel Generator, Power Block #1	2,500 eKW, 4,160 VAC
2- EMV-GEN-001	Emergency Diesel Generator, Power Block #2	2,500 eKW, 4,160 VAC
0-FP-CP-001	Diesel Fire Water Pump, Common Area	4,000 GPM @ 323 TDH, 581 BHP
1-FP-CP-001	Diesel Fire Water Pump, Power Block #1	5,000 GPM @ 323 TDH, 609 BHP
2-FP-CP-001	Diesel Fire Water Pump, Power Block #2	5,000 GPM @ 323 TDH, 609 BHP

Copyright © 2012 CH2M HILL

Table 2

Emissions Data

Emergency Diesel Generators

Document: 459892-PSEGS-DOC-001
Client: BrightSource Industries Israel
Project: Palen Solar Electric Generating Facility

By: CH2M HILL
Date: 19 DEC 2012
Revision: 1

ATTRIBUTE	1	2	3	REMARKS
Description:	Common Area Emergency Diesel Generator	Power Block #1 Emergency Diesel Generator	Power Block #2 Emergency Diesel Generator	
Equipment Number:	0-ELV-GEN-001	1-EMV-GEN-001	2-EMV-GEN-001	
Quantity:	1	1	1	
Manufacturer:	Caterpillar	Caterpillar	Caterpillar	
Model:	CAT C9 ATAAC	CAT 3516C-HD ATAAC	CAT 3516C-HD ATAAC	
Model Year:	2014	2014	2014	Assumed Year of Purchase
Rated Horsepower:				
Generator Power Output:	250 ekW	2,500 ekW	2,500 ekW	
EPA Tier:	3	4	4	
Manufacturer Emission Data Sheet:	See Attachment 1	See Attachment 2	See Attachment 2	
Technical Data Sheet showing engine exhaust temperature, flow, fuel usage:	See Attachment 1	See Attachment 2	See Attachment 2	
Engine Stack Height	16.00	20.00	20.00	Elevation above grade (feet)
Stack Outlet Elevation	660.50	565.50	555.50	Elevation (feet)
Engine Stack Diameter	7.00	20.00	20.00	(Inches)
Exhaust Direction	Vertical	Vertical	Vertical	
Exhaust Cap or Flapper:	Neither	Neither	Neither	Vertical Stack with Drain
Stack Location:	N 71,958.06 E 32,996.29 N 3,728,396.186 E 664,165.167	N 77,275.88 E 34,419.55 N 3,730,020.069 E 664,587.004	N 72,563.45 E 41,308.27 N 3,728,599.323 E 666,697.033	Project Grid (feet) Project Grid (feet) UTM Coordinates NAD 83 (meters) UTM Coordinates NAD 83 (meters)
Manufacturer of Verified Diesel Emission Control System (VDECS):	N/A	N/A	N/A	
Model of VDECS:	N/A	N/A	N/A	

Copyright © 2012 CH2M HILL

Table 2

Emissions Data

Emergency Diesel Generators

Document: 459892-PSEGS-DOC-001
Client: BrightSource Industries Israel
Project: Palen Solar Electric Generating Facility

By: CH2M HILL
Date: 19 DEC 2012
Revision: 1

ATTRIBUTE	1	2	3	REMARKS
Description:	Common Area Emergency Diesel Generator	Power Block #1 Emergency Diesel Generator	Power Block #2 Emergency Diesel Generator	
Equipment Number:	0-ELV-GEN-001	1-EMV-GEN-001	2-EMV-GEN-001	
Maximum Usage: hours/day, hours/quarter, hours/year:	52 hrs/yr	52 hrs/yr	52 hrs/yr	Weekly test of 1 hour or less
Description of other equipment powered (lights, construction office, etc.)	Control System, Control Room Lights and HVAC Equipment	Emergency Electrical Bus, Lubricating Oil Systems, Turbine Turning Gear	Emergency Electrical Bus, Lubricating Oil Systems, Turbine Turning Gear	
Maximum length of time that the unit will remain in the same footprint:	Life of the Plant	Life of the Plant	Life of the Plant	
If the unit will be moved, reason for move (i.e., shorten haul distances).	No unit movement anticipated	No unit movement anticipated	No unit movement anticipated	
Site plan of where engine will be located, showing property lines, existing buildings, and surrounding land uses.	See Drawing P-1001 (Item 112) and C-1000	See Drawing P-1000B (Item 12) and C-1000	See Drawing P-1000A (Item 12) and C-1000	

Copyright © 2012 CH2M HILL

Table 3

Emissions Data

Diesel Fire Water Pumps

Document: 459892-PSEGS-DOC-001
Client: BrightSource Industries Israel
Project: Palen Solar Electric Generating Facility

By: CH2M HILL
Date: 19 DEC 2012
Revision: 1

ATTRIBUTE	1	2	3	REMARKS
Description:	Common Area Diesel Fire Water Pump	Power Block #1 Diesel Fire Water Pump	Power Block #2 Diesel Fire Water Pump	
Equipment Number:	0-FP-CP-001	1-FP-CP-001	2-FP-CP-001	
Quantity:	1	1	1	
Pump Manufacturer:	Aurora Pump	Aurora Pump	Aurora Pump	
Diesel Manufacturer:	Clark / John Deere	Clark / John Deere	Clark / John Deere	
Diesel Model:	JX6H-UFAD88	JX6H-UFAD88	JX6H-UFAD88	
Model Year:	2014	2014	2014	Assumed Year of Purchase
Rated Horsepower:	617	617	617	
Generator Power Output:	N/A	N/A	N/A	
EPA Tier:	3	3	3	
Manufacturer Emission Data Sheet:	See Attachment 3	See Attachment 4	See Attachment 4	
Technical Data Sheet showing engine exhaust temperature, flow, fuel usage:	See Attachment 3	See Attachment 4	See Attachment 4	
Engine Stack Height	20.00	20.00	20.00	Elevation above grade (feet)
Stack Outlet Elevation	664.50	571.50	561.50	Elevation (feet)
Engine Stack Diameter	8.00	8.00	8.00	(Inches)
Exhaust Direction	Vertical	Vertical	Vertical	
Exhaust Cap or Flapper:	Neither	Neither	Neither	Vertical Stack with Drain
Stack Location:	N 71,956.84 E 33,063.80 N 3,728,395.966 E 664,185.744	N 77,089.48 E 33,751.65 N 3,729,961.763 E 664,383.869	N 72,377.08 E 40,640.37 N 3,728,541.027 E 666,493.896	Project Coordinate (feet) Project Coordinate (feet) UTM Coordinates NAD 83 (meters) UTM Coordinates NAD 83 (meters)
Manufacturer of Verified Diesel Emission Control System (VDECS):	N/A	N/A	N/A	

Copyright © 2012 CH2M HILL

Table 3

Emissions Data

Diesel Fire Water Pumps

Document: 459892-PSEGS-DOC-001
Client: BrightSource Industries Israel
Project: Palen Solar Electric Generating Facility

By: CH2M HILL
Date: 19 DEC 2012
Revision: 1

ATTRIBUTE	1	2	3	REMARKS
Description:	Common Area Diesel Fire Water Pump	Power Block #1 Diesel Fire Water Pump	Power Block #2 Diesel Fire Water Pump	
Equipment Number:	0-FP-CP-001	1-FP-CP-001	2-FP-CP-001	
Model of VDECS:	N/A	N/A	N/A	
Maximum Usage: hours/day, hours/quarter, hours/year:	199 hrs/yr	199 hrs/yr	199 hrs/yr	Weekly test of 1 hour or less
Description of other equipment powered (lights, construction office, etc.)	Fire Pump Only	Fire Pump Only	Fire Pump Only	
Maximum length of time that the unit will remain in the same footprint:	Life of the Plant	Life of the Plant	Life of the Plant	
If the unit will be moved, reason for move (i.e., shorten haul distances).	No unit movement anticipated	No unit movement anticipated	No unit movement anticipated	
Site plan of where engine will be located, showing property lines, existing buildings, and surrounding land uses.	See Drawing P-1001 (Item 114) and C-1000	See Drawing P-1000B (Item 28)	See Drawing P-1000A (Item 28)	

Copyright © 2012 CH2M HILL

DIESEL GENERATOR SET

0-ELV-GEN-001
Emergency Diesel Generator - Common Area

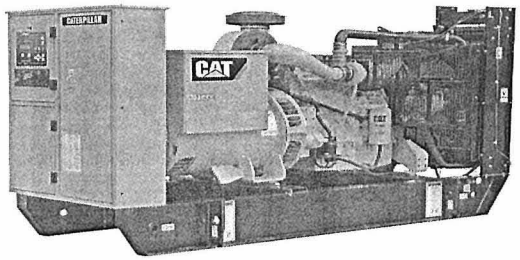

Image shown may not reflect actual package.

STANDBY
250 ekW 313 kVA
60 Hz 1800 rpm 480 Volts

Caterpillar is leading the power generation marketplace with Power Solutions engineered to deliver unmatched flexibility, expandability, reliability, and cost-effectiveness.

FEATURES

FUEL/EMISSIONS STRATEGY
- EPA Certified for Stationary Emergency Application (EPA Tier 3 emissions levels)

DESIGN CRITERIA
- The generator set accepts 100% rated load in one step per NFPA 110 and meets ISO 8528-5 transient response.

UL 2200
- UL 2200 listed packages available. Certain restrictions may apply. Consult with your Cat® Dealer.

FULL RANGE OF ATTACHMENTS
- Wide range of bolt-on system expansion attachments, factory designed and tested
- Flexible packaging options for easy and cost effective installation

SINGLE-SOURCE SUPPLIER
- Fully prototype tested with certified torsional vibration analysis available

WORLDWIDE PRODUCT SUPPORT
- Cat dealers provide extensive post sale support including maintenance and repair agreements
- Cat dealers have over 1,800 dealer branch stores operating in 200 countries
- The Cat® S•O•S℠ program cost effectively detects internal engine component condition, even the presence of unwanted fluids and combustion by-products

CAT® C9 ATAAC DIESEL ENGINE
- Utilizes ACERT™ Technology
- Reliable, rugged, durable design
- Field-proven in thousands of applications worldwide
- Four-stroke diesel engine combines consistent performance and excellent fuel economy with minimum weight
- ADEM™A4 electronic engine control

CAT GENERATOR
- Matched to the performance and output characteristics of Cat engines
- Load adjustment module provides engine relief upon load impact and improves load acceptance and recovery time
- UL 1446 Recognized Class H insulation

CAT EMCP 4 CONTROL PANELS
- Simple user friendly interface and navigation
- Scalable system to meet a wide range of customer needs
- Integrated Control System and Communications Gateway

FACTORY INSTALLED STANDARD & OPTIONAL EQUIPMENT

System	Standard	Optional
Air Inlet	• Light Duty Air filter • Service indicator	[ ] Single element air filter [ ] Dual element air filter [ ] Heavy-duty dual element air filter with precleaner [ ] Air inlet shut-off
Cooling	• Radiator package mounted • Coolant level sight gauge • Coolant drain line with valve • Fan and belt guards • Cat® Extended Life Coolant	[ ] Radiator duct flange [ ] Low coolant level sensor
Exhaust	• Dry exhaust manifold • Exhaust flange outlet	[ ] Industrial [ ] Residential [ ] Critical Mufflers [ ] Stainless steel exhaust flex fittings with split-cuff [ ] Manifold and turbocharger guards [ ] Elbows and through-wall kits
Fuel	• Primary fuel filter with integral water separator • Secondary fuel filters • Fuel priming pump • Engine fuel transfer pump • Fuel cooler	[ ] Integral dual wall UL listed fuel tank bases [ ] Sub-base dual wall UL listed fuel tank base [ ] Manual transfer pump [ ] Fuel level switch [ ] Flexible fuel lines
Generator	• Class H insulation • Class H temperature Rise • VR6 voltage regulator with 3-phase sensing with load adjustment module • IP23 Protection • Power cable termination box (NEMA mech lug holes)	[ ] Oversize generators [ ] Digital voltage regulator with kVAR/PF control [ ] Anti-condensation heaters [ ] Coastal Insulation Protection (CIP) [ ] Permanent magnet excitation (PMG) [ ] Internal excited (IE) [ ] Reactive droop
Power Termination	• Power center houses EMCP controller and control terminations (rear mounted) • Segregated low voltage wiring termination panel • Bottom cable entry • IP22 Protection	[ ] Power center mounting option (right side) [ ] Circuit breakers, UL listed, 3 pole (80% & 100% rated) [ ] Circuit breakers, IEC compliant, 3-4 pole (100%) [ ] Power terminal strips (NEMA or IEC mechanical lug holes) [ ] Multiple circuit breakers [ ] Shunt trip [ ] Auxiliary contacts
Governor	• ADEM™A4	[ ] Load share module
Control Panel	• EMCP 4.1 (mounted in power center) • Speed adjust • Voltage adjustment • Emergency stop pushbutton	[ ] EMCP 4.2 [ ] Local annunciator module (NFPA 99/110) [ ] Remote annunicator module (NFPA 99/110) [ ] Digital I/O module
Lube	• Lubricating oil and filter • Oil drain line with valves • Fumes disposal • Lube oil level indicator • Oil cooler	[ ] Oil temperature sensor [ ] Manual sump pump
Mounting	• Formed steel wide base frame • Linear vibration isolation-seismic zone 4	[ ] Oil skid base [ ] Formed steel wide base frame
Starting/Charging	• 24 volt starting motor • 24 volt, 45 amp charging alternator	[ ] Jacket water heater with shut off valves [ ] Block heater [ ] Ether starting aid [ ] Battery disconnect switch [ ] Battery chargers (5 or 10 amp) [ ] Oversize batteries [ ] Batteries with rack and cables
General	• Paint - Caterpillar Yellow except rails and radiators gloss black • Flywheel housing - SAE No.1	[ ] UL 2200 package [ ] CSA Certification [ ] Weather protective enclosure [ ] Sound attenuated protective enclosure

SPECIFICATIONS

CAT GENERATOR

Frame size..... LC5014H
Excitation..... Self Excitation
Pitch..... 0.6667
Number of poles..... 4
Number of bearings..... Single bearing
Number of Leads..... 012
Insulation..... UL 1446 Recognized Class H with tropicalization and antiabrasion
- Consult your Caterpillar dealer for available voltages
IP Rating..... Drip Proof IP23
Alignment..... Pilot Shaft
Overspeed capability..... 125
Wave form Deviation (Line to Line)..... 2%
Voltage regulator..... Three phase sensing
Voltage regulation..... Less than +/- 1/2% (steady state)
Telephone influence factor..... Less than 50
Harmonic Distortion..... Less than 5%

CAT DIESEL ENGINE

C9 ATAAC, I-6, 4-Stroke Water-cooled Diesel
Bore..... 112.00 mm (4.41 in)
Stroke..... 149.00 mm (5.87 in)
Displacement..... 8.80 L (537.01 in³)
Compression Ratio..... 16.1:1
Aspiration..... Air-to-Air Aftercooled
Fuel System..... Hydraulic electronic unit injection
Governor Type..... Caterpillar ADEM control system

CAT EMCP 4 SERIES CONTROLS

EMCP 4 controls including:
- Run / Auto / Stop Control
- Speed and Voltage Adjust
- Engine Cycle Crank
- 24-volt DC operation
- Environmental sealed front face
- Text alarm/event descriptions

Digital indication for:
- RPM
- DC volts
- Operating hours
- Oil pressure (psi, kPa or bar)
- Coolant temperature
- Volts (L-L & L-N), frequency (Hz)
- Amps (per phase & average)
- ekW, kVA, kVAR, kW-hr, %kW, PF (4.2 only)

Warning/shutdown with common LED indication of:
- Low oil pressure
- High coolant temperature
- Overspeed
- Emergency stop
- Failure to start (overcrank)
- Low coolant temperature
- Low coolant level

Programmable protective relaying functions:
- Generator phase sequence
- Over/Under voltage (27/59)
- Over/Under Frequency (81 o/u)
- Reverse Power (kW) (32) (4.2 only)
- Reverse reactive power (kVAr) (32RV)
- Overcurrent (50/51)

Communications:
- Four digital inputs (4.1)
- Six digital inputs (4.2 only)
- Four relay outputs (Form A)
- Two relay outputs (Form C)
- Two digital outputs
- Customer data link (Modbus RTU) (4.2 only)
- Accessory module data link (4.2 only)
- Serial annunciator module data link (4.2 only)
- Emergency stop pushbutton

Compatible with the following:
- Digital I/O module
- Local Annunciator
- Remote CAN annunciator
- Remote serial annunciator

TECHNICAL DATA

Open Generator Set - - 1800 rpm/60 Hz/480 Volts	DM8501	
Tier 3		
Generator Set Package Performance		
Genset Power rating @ 0.8 pf	312.5 kVA	
Genset Power rating with fan	250 ekW	
Coolant to aftercooler		
Coolant to aftercooler temp max	49 ° C	120 ° F
Fuel Consumption		
100% load with fan	73.3 L/hr	19.4 Gal/hr
75% load with fan	58.8 L/hr	15.5 Gal/hr
50% load with fan	43.8 L/hr	11.6 Gal/hr
Cooling System[1]		
Air flow restriction (system)	0.12 kPa	0.48 in. water
Air flow (max @ rated speed for radiator arrangement)	497 m³/min	17551 cfm
Engine Coolant capacity with radiator/exp. tank	36.0 L	9.5 gal
Engine coolant capacity	22.0 L	5.8 gal
Radiator coolant capacity	14.0 L	3.7 gal
Inlet Air		
Combustion air inlet flow rate	25.0 m³/min	882.9 cfm
Exhaust System		
Exhaust stack gas temperature	456.6 ° C	853.9 ° F
Exhaust gas flow rate	63.5 m³/min	2242.5 cfm
Exhaust flange size (internal diameter)	170 mm	7 in
Exhaust system backpressure (maximum allowable)	5.9 kPa	23.7 in. water
Heat Rejection		
Heat rejection to coolant (total)	105 kW	5971 Btu/min
Heat rejection to exhaust (total)	277 kW	15753 Btu/min
Heat rejection to aftercooler	83 kW	4720 Btu/min
Heat rejection to atmosphere from engine	21 kW	1194 Btu/min
Heat rejection to atmosphere from generator	19.7 kW	1120.3 Btu/min
Alternator[2]		
Motor starting capability @ 30% voltage dip	543 skVA	
Frame	LC5014H	
Temperature Rise	150 ° C	270 ° F
Lube System		
Sump refill with filter	39.0 L	10.3 gal
Emissions (Nominal)[3]		
NOx g/hp-hr	2.97 g/hp-hr	
CO g/hp-hr	.36 g/hp-hr	
HC g/hp-hr	.1 g/hp-hr	
PM g/hp-hr	.079 g/hp-hr	

[1] For ambient and altitude capabilities consult your Cat dealer. Air flow restriction (system) is added to existing restriction from factory.
[2] Generator temperature rise is based on a 40° C (104° F) ambient per NEMA MG1-32.
[3] Emissions data measurement procedures are consistent with those described in EPA CFR 40 Part 89, Subpart D & E and ISO8178-1 for measuring HC, CO, PM, NOx. Data shown is based on steady state operating conditions of 77°F, 28.42 in HG and number 2 diesel fuel with 35° API and LHV of 18,390 btu/lb. The nominal emissions data shown is subject to instrumentation, measurement, facility and engine to engine variations. Emissions data is based on 100% load and thus cannot be used to compare to EPA regulations which use values based on a weighted cycle.

RATING DEFINITIONS AND CONDITIONS

Meets or Exceeds International Specifications: AS1359, CSA, IEC60034-1, ISO3046, ISO8528, NEMA MG 1-22, NEMA MG 1-33, UL508A, 72/23/EEC, 98/37/EC, 2004/108/EC

Standby - Output available with varying load for the duration of the interruption of the normal source power. Average power output is 70% of the standby power rating. Typical operation is 200 hours per year, with maximum expected usage of 500 hours per year. Standby power in accordance with ISO8528. Fuel stop power in accordance with ISO3046. Standby ambients shown indicate ambient temperature at 100% load which results in a coolant top tank temperature just below the shutdown temperature.

Ratings are based on SAE J1349 standard conditions. These ratings also apply at ISO3046 standard conditions. **Fuel rates** are based on fuel oil of 35° API [16° C (60° F)] gravity having an LHV of 42 780 kJ/kg (18,390 Btu/lb) when used at 29° C (85° F) and weighing 838.9 g/liter (7.001 lbs/U.S. gal.). Additional ratings may be available for specific customer requirements, contact your Cat representative for details. For information regarding Low Sulfur fuel and Biodiesel capability, please consult your Cat dealer.

STANDBY 250 ekW 313 kVA

60 Hz 1800 rpm 480 Volts

0-ELV-GEN-001

Emergency Diesel Generator - Common Area

DIMENSIONS

Package Dimensions		
Length	3292.0 mm	129.61 in
Width	1110.0 mm	43.7 in
Height	1844.5 mm	72.62 in
Weight	2308 kg	5,088 lb

NOTE: For reference only - do not use for installation design. Please contact your local dealer for exact weight and dimensions. (General Dimension Drawing #2778059).

Performance No.: DM8501

Feature Code: C09DE02

Gen. Arr. Number: 2541292

Source: U.S. Sourced

June 13 2011

17804067

www.Cat-ElectricPower.com

© 2011 Caterpillar
All rights reserved.

Materials and specifications are subject to change without notice. The International System of Units (SI) is used in this publication.

CAT, CATERPILLAR, their respective logos, "Caterpillar Yellow," the "Power Edge" trade dress, as well as corporate and product identity used herein, are trademarks of Caterpillar and may not be used without permission.

Diesel Generator Set

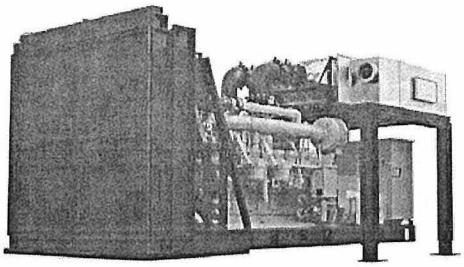

Image shown may not reflect actual package

Standby
2500 ekW 3125 kVA
60 Hz 1800 rpm 4160 Volts

Caterpillar is leading the power generation Market place with Power Solutions engineered to deliver unmatched flexibility, expandability, reliability, and cost-effectiveness.

FUEL/EMISSIONS STRATEGY
- EPA Tier 4 Interim

DESIGN CRITERIA
- The generator set accepts 100% rated load in one step per NFPA 110 and meets ISO 8528-5 transient response.

FULL RANGE OF ATTACHMENTS
- Wide range of bolt-on system expansion attachments, factory designed and tested
- Flexible packaging options for easy and cost effective installation

SINGLE-SOURCE SUPPLIER
- Fully prototype tested with certified torsional vibration analysis available

WORLDWIDE PRODUCT SUPPORT
- Cat® dealers provide extensive post sale support including maintenance and repair agreements
- Cat dealers have over 1,800 dealer branch stores operating in 200 countries.
- The Cat® SOS℠ program effectively detects internal engine component condition, even the presence of unwanted fluids and combustion by products.

CAT 3516C-HD ATAAC DIESEL ENGINE
- Reliable, rugged, durable design
- Field proven in thousands of applications worldwide
- Four-stroke diesel engine combines consistent performance and excellent fuel economy with minimum weight
- Engine performance optimized for use with Cat clean emissions module (CEM)

CAT CLEAN EMISSIONS MODULE (CEM)
- Diesel oxidation catalyst for particulate matter (PM) and hydrocarbon (HC) control
- Selective catalytic reduction (SCR) with integrated sound attenuation
- Integrated electronics for monitoring, protection, and closed loop NO_x control
- Reliable, compact, and lightweight system gives maximum installation flexibility

CAT GENERATOR
- Matched to the performance and output characteristics of Caterpillar engines
- Single point access to accessory connections
- UL 1446 Recognized Class H insulation

CAT EMCP 4 CONTROL PANELS
- Simple user friendly interface and navigation
- Scalable system to meet a wide range of customer needs
- Integrated Control System and Communications Gateway

1-EMV-GEN-001 & 2-EMV-GEN-001
Emergency Diesel Generator - Power Blocks 1 & 2

STANDBY 2500 ekW 3125 kVA

60 Hz 1800 rpm 4160 Volts

Factory Installed Standard & Optional Equipment

System	Standard	Optional
Air Inlet	• Single element canister type air cleaner with service indicator	[ ] Dual element air cleaners [ ] Air inlet adapters & shutoff
Cooling	• Radiator with guard • Fan and belt guards • Coolant drain line with valve • Coolant level sensors* • Cat Extended Life Coolant*	[ ] Jacket water heater [ ] Radiator duct flange [ ] Radiator options
Exhaust	• Exhaust manifold - dry - dual • 254 mm (10 in) ID round flanged engine outlets • Clean Emissions Module (CEM) • CEM control cabinet • Flanged outlet	[ ] Mufflers [ ] Stainless steel exhaust flex fittings [ ] Elbows, flanges, expanders, & Y adapters [ ] CEM installation package including support, exhaust connection kit, harness, and heated urea lines.
Fuel	• Secondary fuel filters • Fuel cooler* • Fuel priming pump • Flexible fuel lines-shipped loose	[ ] Duplex secondary fuel filter [ ] Primary fuel filter with fuel waters separator
Generator	• 3 Phase brushless, Salient pole • Class H insulation • Cat digital voltage regulator (CDVR) with VAR/PF control, 3-phase sensing • Winding temperature detectors • Anti-condensation space heaters	[ ] Oversize generators
Power Termination	• Bus bar (NEMA mechanical lug holes) • Right hand bottom cable entry	[ ] Left and/or rear power termination
Governor	• ADEM™ A4	[ ] Load share module
Control Panel	• User interface panel (UIP) - rear mount • EMCP 4.2 Genset Controller • AC & DC customer wiring area (right side) • Emergency Stop Pushbutton	[ ] Local & remote annunciator modules [ ] Digital I/O Module [ ] Generator temperature monitoring & protection
Lube	• Lubricating oil • Gear type lube oil pump • Integral lube oil cooler • Oil filter, filler and dipstick • Oil drain line and valve • Closed crankcase ventilation (CCV) system	[ ] Oil level regulator [ ] Deep sump oil pan [ ] Electric & air prelube pumps [ ] Manual prelube with sump pump [ ] Duplex oil filter
Mounting	• Rails - engine / generator / radiator mounting • Rubber anti-vibration mounts (shipped loose)	[ ] Spring type vibration isolator
Starting / Charging	• 24 volt starting motor(s) • Batteries with rack and cables • Battery disconnect switch • 60A charging alternator	[ ] Battery chargers (10, 20, & 50 Amp) [ ] Oversize batteries [ ] Ether starting aids [ ] Heavy duty starting motors [ ] Barring device (manual) [ ] Air starting motor with control & silencer
General	• Right hand service • Paint – Cat yellow except rails and radiators gloss black • SAE standard rotation • Flywheel and flywheel housing – SAE No. 00	

*Not included with packages without radiators

1-EMV-GEN-001 & 2-EMV-GEN-001
Emergency Diesel Generator - Power Blocks 1 & 2

STANDBY 2500 ekW 3125 kVA

60 Hz 1800 rpm 4160 Volts

SPECIFICATIONS

CAT GENERATOR

Frame 1846
Excitation .....Permanent Magnet
Pitch.....0.6667
Number of poles.....4
Number of leads.....6
Number of bearings .....Two Bearing
Insulation .....Class H
IP rating .....Drip proof IP23
Over speed capability - % of rated.....125%
Wave form deviation.....3 %
Voltage regulator..... 3 phase sensing with load adjustable module
Voltage regulation....Less than ±1/2% (steady state)
Less than ±1/2% (3% speed change)
Telephone Influence Factor .....Less than 50
Harmonic Distortion .....Less than 5%

CAT DIESEL ENGINE

3516C-HD ATAAC, V-12, 4 stroke, water-cooled diesel

Bore .....170.00 mm (6.69 in)
Stroke .....215.00 mm (8.64in)
Displacement .....78.08 L (4764.73 in^3)
Compression ratio.....14.0:1
Aspiration.....TA
Fuel system.....Electronic unit injection
Governor Type..... ADEM™ A4

CAT EMCP 4 CONTROL PANELS

EMCP 4 controls including:
- Run / Auto / Stop Control
- Speed & Voltage Adjust
- Engine Cycle Crank
- Emergency stop pushbutton

EMCP 4.2 controller features:
- 24-volt DC operation
- Environmental sealed front face
- Text alarm/event descriptions

Digital indication for:
- RPM
- DC volts
- Operating hours
- Oil pressure (psi, kPa or bar)
- Coolant temperature
- Volts (L-L & L-N), frequency (Hz)
- Amps (per phase & average)
- Power Factor (per phase & average)
- kW (per phase, average & percent)
- kVA (per phase, average & percent)
- kVAr (per phase, average & percent)
- kW-hr & kVAr-hr (total)

Warning/shutdown with common LED indication of shutdowns for:
- Low oil pressure
- High coolant temperature
- Overspeed
- Emergency stop
- Failure to start (overcrank)
- Low coolant temperature
- Low coolant level

Programmable protective relaying functions:
- Generator phase sequence
- Over/Under voltage (27/59)
- Over/Under Frequency (81 o/u)
- Reverse Power (kW) (32)
- Reverse Reactive Power (kVAr) (32RV)
- Overcurrent (50/51)

Communications
- Customer data link (Modbus RTU)
- Accessory module data link
- Serial annunciator module data link

- 6 programmable digital inputs
- 4 programmable relay outputs (Form A)
- 2 programmable relay outputs (Form C)
- 2 programmable digital outputs

Compatible with the following optional modules:
- Digital I/O module
- Local Annunciator
- Remote annunciator
- RTD module
- Thermocouple module

1-EMV-GEN-001 & 2-EMV-GEN-001
Emergency Diesel Generator - Power Blocks 1 & 2

STANDBY 2500 ekW 3125 kVA

60 Hz 1800 rpm 4160 Volts

Technical Data

Open Generator Set - 1800 rpm/60 Hz/4160 Volts	DM9370	
Tier 4 Interim		
Generator Set Package Performance		
Genset Power rating @ 0.8 pf	3125 kVA	
Genset Power Rating with fan	2500 ekW	
Fuel Consumption[1]		
100% Load with fan	654.5 L/hr	172.9 Gal/hr
75% Load with fan	495.9 L/hr	131.0 Gal/hr
50% Load with fan	355.6 L/hr	93.9 Gal/hr
Diesel Exhaust Fluid (DEF) Consumption[2]		
100% Load with fan	50.8 L/hr	13.4 Gal/hr
75% Load with fan	35.0 L/hr	9.2 Gal/hr
50% Load with fan	18.1 L/hr	4.8 Gal/hr
Cooling System[3]		
Engine coolant capacity with radiator	537 L	141.9 gal
Engine coolant capacity	233 L	61.6 gal
Radiator coolant capacity	304 L	80.3 gal
Inlet Air		
Combustion air inlet flow rate	197.8 mm^3/min	6985.4 cfm
Exhaust System[4]		
Exhaust stack gas temperature (engine out)	522.7 °C	972.9 °F
Exhaust gas flow rate	556.8 mm^3/min	19660 cfm
Exhaust system backpressure (maximum allowable)	6.7 kPA	26.9 in water
Heat Rejection		
Heat rejection to cooolant (total)	842 kW	47859 Btu/min
Heat rejection to exhaust (total)	2570 kW	146173 Btu/min
Heat rejection to aftercooler	665 kW	37831 Btu/min
Heat rejection to atmosphere from engine	168 kW	9535 Btu/min
Heat rejection to atmosphere from CEM	311 kW	17702 Btu/min
Heat rejection to atmosphere from generator	101.5 kW	5777 Btu/min
Alternator[5]		
Motor starting capabiliy @30% voltage dip	6996 skVA	
Frame	1824	
Temperature Rise	125 °C	225 °F
Lube System[6]		
Sump refil with filter	401.3 L	106 gal
Emissions (Nominal)[7]		
NOx g/hp-hr	0.59 g/hp-hr	
CO g/hp-hr	0.03 g/hp-hr	
HC g/hp-hr	0.00 g/hp-hr	
PM g/hp-hr	0.03 g/hp-hr	

[1] EPA Tier 4 Interim diesel engines required the use of Ultra Low Sulfur Diesel (ULSD) fuel in order to protect emissions control systems, help comply with emissions standards, and meet published maintenance intervals. ULSD fuel will have ≤ 15 ppm (0.0015%) sulfur using the ASTM D5453, ASTM 2622, or SIN 51400 test methods.

[2] Diesel Exhaust Fluid (DEF) is 32.5% urea in de-ionized water, defined by ISO-22241

[3] For ambient and altitude capabilities consult your Caterpillar dealer. Air flow restriction (system) is added to existing restriction from factory.

[4] Backpressure allowance is total backpressure available for the customer excluding the clean emissions module (CEM).

[5] Some packages may have oversized generators with a different temperature rise and motor starting characteristics. Generator temperature rise is based on a 40 degree C ambient per NEMA MG1-32.

[6] Requires the use of CJ4 oil in order to meet published maintenance intervals.

[7] Emissions data measurement procedures are consistent with those described in EPA CFR 40 Part 89, Subpart D & E and ISO8178-1 for measuring HC, CO, PM, NOx. Data shown is based on steady state operating conditions of 77°F, 28.42 in HG and number 2 diesel fuel with 35° API and LHV of 18,390 btu/lb. The nominal emissions data shown is subject to instrumentation, measurement, facility and engine to engine variations. Emissions data is based on 100% load and thus cannot be used to compare to EPA regulations which use values based on a weighted cycle. Emissions values are tailpipe out with aftertreatment installed. Values shown as zero may be greater than zero but were below the detection level of the equipment used at the time of measurement.

STANDBY 2500 ekW 3125 kVA

60 Hz 1800 rpm 4160 Volts

RATING DEFINITIONS AND CONDITIONS

Meets or Exceeds International Specifications: · AS1359, CSA, IEC60034-1, ISO3046, ISO8528, NEMA MG 1-22, NEMA MG 1-33, UL508A, 72/23/EEC, 98/37/EC, 2004/108/EC

Standby - Output available with varying load for the duration of the interruption of the normal source power. Average power output is 70% of the standby power rating. Typical operation is 200 hours per year, with maximum expected usage of 500 hours per year. Standby power in accordance with ISO8528. Fuel stop power in accordance with ISO3046. Standby ambients shown indicate ambient temperature at 100% load which results in a coolant top tank temperature just below the shutdown temperature.

Ratings are based on SAE J1349 standard conditions. These ratings also apply at ISO3046 standard conditions

Fuel Rates are based on fuel oil of 35° API [16° C (60° F)] gravity having an LHV of 42 780 kJ/kg (18,390 Btu/lb) when used at 29° C (85° F) and weighing 838.9 g/liter (7.001 lbs/U.S. gal.). Additional ratings may be available for specific customer requirements, contact your Cat representative for details. For information regarding Low Sulfur fuel and Biodiesel capability, please consult your Cat dealer.

1-EMV-GEN-001 & 2-EMV-GEN-001
Emergency Diesel Generator - Power Blocks 1 & 2

STANDBY 2500 ekW 3125 kVA

60 Hz 1800 rpm 4160 Volts

Dimensions

Package Dimensions		
Length	7100mm	279.5 in
Width	2588 mm	101.88 in
Height	2880 mm	113.38 in
Weight	19400 kg	42769 lb

NOTE: For reference only - do not use for installation design. Please contact your local dealer for exact weight and dimensions.

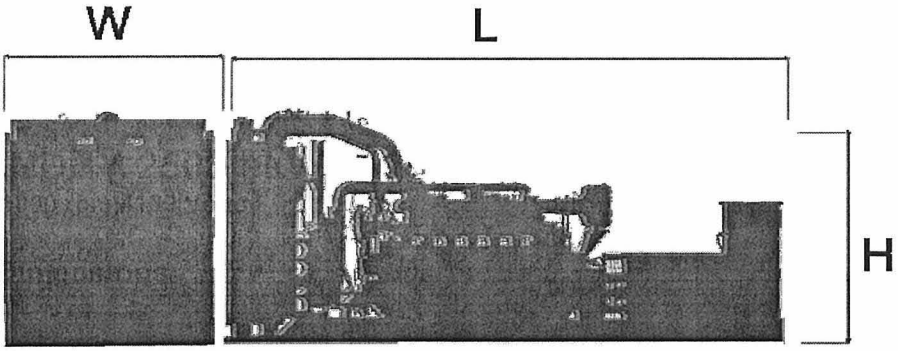

CEM Dimensions		
Length	3366 mm	132.5 in
Width	2230 mm	87.8 in
Height	894 mm	35.2 in
Weight	1814 kg	4000 lb

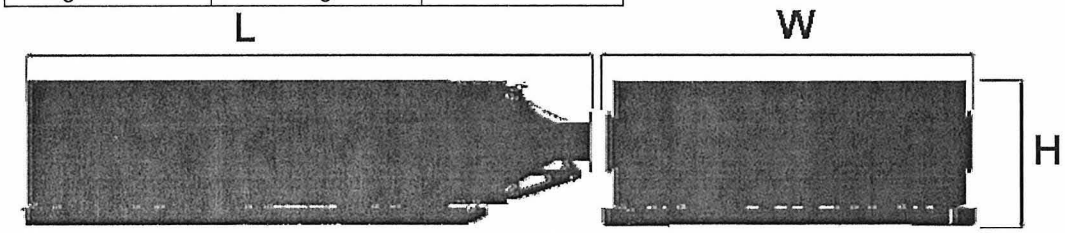

www.Cat-EectricPower.com

©2011 Caterpillar
All rights reserved.

Sourced: U.S. Sourced

October 2011

EPD0028-E

Materials and specifications are subject to change without notice. The International System of Units (SI) is used in this publication.

CAT, CATERPILLAR, SAFETY.CAT.COM their respective logos, "Caterpillar Yellow," the "Power Edge" trade dress as well as corporate and product identity used herein, are trademarks of Caterpillar and may not be used without permission.

SELECTION TABLES
Horizontal Split Case Fire Pump
Diesel Engine Drive

0-FP-CP-001
Diesel Fire Water Pump - Common Area

	Diesel Driven							
Flow GPM	Pressure (PSI)	Pressure (TDH)	Speed (RPM)	Horse Power (BHP)	Pump Size & Model	Engine Model	Engine HP	WT.
4000 GPM	64	148	1460	203	10-481-18D	CFP7E-F50	205	3800
	65	150	1460	207	10-481-18D	CFP7E-F60	218	3800
	67	155	1460	240	12-481-18A	CFP9E-F30	248	3800
	70	162	1460	252	12-481-18A	CFP9E-F40	271	5150
			1460	226	10-481-18D	CFP9E-F20	230	4300
	75	173	1460	274	12-481-18A	CFP9E-F50	289	5150
			1460	247	10-481-18D	CFP9E-F30	248	4300
	80	185	1460	297	12-481-18A	CFP9E-F60	305	5150
			1460	269	10-481-18D	CFP9E-F40	271	4300
	85	196	1460	322	12-481-18A	CFP15E-F10	382	7629
			1750	273	10-481-18D	JU6H-UFADW8	282	3947
			1460	288	10-481-18D	CFP9E-F50	289	4300
	90	208	1460	352	12-481-18A	CFP15E-F10	382	7629
			1750	302	10-481-18D	JU6H-UFADX8	305	3947
			1460	315	10-481-18D	CFP15E-F10	382	6379
	92	213	1460	325	10-481-18D	CFP15E-F10	382	6379
	94	217	1750	363	10-491-20	JW6H-UFAD70	376	7634
	95	219	1460	385	12-481-18A	CFP15E-F20	410	7629
			1750	317	10-481-18	JW6H-UFADF0	327	4769
			1750	366	10-491-20	JW6H-UFAD70	376	7634
			1750	324	10-481-18D	JW6H-UFADF0	327	4294
	100	231	1460	430	12-481-18A	CFP15E-F30	450	7629
			1750	330	10-481-18	JW6H-UFADJ0	350	4769
			1750	383	10-491-20	JW6H-UFAD80	422	7634
			1750	347	10-481-18D	JW6H-UFADJ0	350	4294
	102	236	1460	450	12-481-18A	CFP15E-F30	450	7629
	105	243	1750	365	10-481-18	JW6H-UFAD70	376	4769
			1750	401	10-491-20	JW6H-UFAD80	422	7634
			1750	373	10-481-18D	JW6H-UFAD70	376	4294
	109	252	1750	381	10-481-18	JW6H-UFAD80	422	4769
			1750	417	10-491-20	JW6H-UFAD80	422	7634
	110	254	1750	381	10-481-18	JW6H-UFAD80	422	4769
			1750	421	10-491-20	JW6H-UFAD80	422	7634
			1900	438	10-491-20	CFP15E-F10	488	9719
			1750	397	10-481-18D	JW6H-UFAD80	422	4294
	115	266	1750	444	10-491-20	JX6H-UFADF0	460	8790
			1900	464	10-491-20	CFP15E-F10	488	9719
			1750	419	10-481-18D	JW6H-UFAD80	422	4294
	120	277	1750	468	10-491-20	JX6H-UFAD60	510	8790
			1900	491	10-491-20	CFP15E-F20	524	9719
			1750	447	10-481-18D	JX6H-UFADF0	460	5450
	125	289	1750	494	10-491-20	JX6H-UFAD60	510	8790
			1900	518	10-491-20	CFP15E-F20	524	9719
			1750	475	10-481-18D	JX6H-UFAD60	510	5450
	130	300	1750	522	10-491-20	JX6H-UFADN0	542	8845
			1900	546	10-491-20	CFP15E-F30	575	9719
			1750	500	10-481-18D	JX6H-UFAD60	510	5450
	134	310	1750	527	10-481-18D	JX6H-UFADN0	542	5450
	135	312	1750	551	10-491-20	JX6H-UFADP0	575	8845
			1900	574	10-491-20	CFP15E-F30	575	9774
	140	323	1750	581	10-491-20	JX6H-UFAD88	617	8845
			1900	603	10-491-20	CFP15E-F40	610	9774
	145	335	1750	613	10-491-20	JX6H-UFAD88	617	8,845
			1900	632	10-491-20	Cat 18 (700)	700	10,695
	150	347	1750	645	10-491-20	Cat 18 (700)	700	10,695
			1900	662	10-491-20	Cat 18 (700)	700	10,695
	155	358	1750	671	10-491-20	Cat 18 (700)	700	10,695
			1900	693	10-491-20	Cat 18 (700)	700	10,695
	160	370	1750	698	10-491-20	Cat 18 (700)	700	10,695
			1900	724	10-491-20	Cat 18 (800)	800	10,695
	165	381	1750	728	10-491-20	Cat 18 (800)	800	10,695
			1900	753	10-491-20	Cat 18 (800)	800	10,695

*UL listed only.

CLARKE®

FIRE PUMP ENGINES

MODELS

JX6H-UFADF0 JX6H-UFADN0
JX6H-UFAD60 JX6H-UFADP0
JX6H-UFADK0 JX6H-UFAD88

FM-UL-cUL APPROVED RATINGS BHP/*KW*

JX6H MODEL ♦	RATED SPEED 1760		RATED SPEED 2100		US-EPA (NSPS) Available Until ●
UFADF0	460	*343*	488	*364*	*No Expiration*
UFAD60	510	*380*	525	*392*	*No Expiration*
UFADN0	542	*404*	575	*429*	*No Expiration*
UFADP0	575	*429*	600	*447*	*No Expiration*
UFAD88	617	*460*			*No Expiration*

● USA EPA (NSPS) Tier 3 Emissions Certified Off-Road (40 CFR Part 89) and NSPS Stationary (40 CFR Part 60 Sub Part IIII). Meet EU Stage IIIA emission levels.

♦ All Models are available for Export

0-FP-CP-001
Diesel Fire Water Pump - Common Area

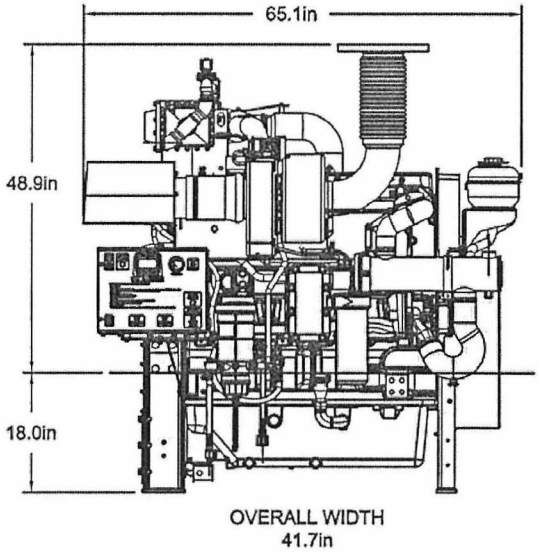

SPECIFICATIONS

ITEM	JX6H MODELS UFADF0	UFAD60	UFADN0	UFADP0	UFAD88
Number of Cylinders	6				
Aspiration	TRWA				
Rotation*	CW				
Weight – lb (kg)	3315 (1500)				
Compression Ratio	16.0:1				
Displacement – cu. in. (l)	824 (13.5)				
Engine Type	4 Stroke Cycle – Inline Construction				
Bore & Stroke – in. (mm)	5.20 X 6.50 (132 X 165)				
Installation Drawing	D626				
Wiring Diagram AC	C07651				
Wiring Diagram DC	C071360, C071361, C071371				
Engine Series	John Deere 6135 Series Power Tech Plus				
Speed Interpolation	N/A				

Abbreviations: CW – Clockwise TRWA – Turbocharged with Raw Water Aftercooling N/A – Not Available

*Rotation viewed from Heat Exchanger / Front of engine

CERTIFIED POWER RATING

- Each engine is factory tested to verify power and performance.
- FM-UL power ratings are shown at specific speeds, Clarke engines can be applied at a single rated RPM setting ± 50 RPM.

ENGINE RATINGS BASELINES

- Engines are to be used for stationary emergency standby fire pump service only. Engines are to be tested in accordance with NFPA 25.
- Engines are rated at standard SAE conditions of 29.61 in. (752.1 mm) Hg barometer and 77°F (25°C) inlet air temperature [approximates 300 ft. (91.4 m) above sea level] by the testing laboratory (see SAE Standard J 1349).
- A deduction of 3 percent from engine horsepower rating at standard SAE conditions shall be made for diesel engines for each 1000 ft. (305 m) altitude above 300 ft. (91.4 m)
- A deduction of 1 percent from engine horsepower rating as corrected to standard SAE conditions shall be made for diesel engines for every 10°F (5.6°C) above 77°F (25°C) ambient temperature.

c UL us

Meets NFPA 20 Requirements

FM c us APPROVED

MODELS

JX6H-UFADF0 JX6H-UFADN0
JX6H-UFAD60 JX6H-UFADP0
JX6H-UFADK0 JX6H-UFAD88

ENGINE EQUIPMENT

EQUIPMENT	STANDARD	OPTIONAL
Air Cleaner	Direct Mounted, Washable, Indoor Service with Drip Shield	Disposable, Drip Proof, Indoor Service Outdoor Type, Single or Two Stage
Alternator	24V-DC, 40 Amps with Poly-Vee Belt and Guard	
Exhaust Protection	Metal Guards on Manifolds and Turbocharger	
Coupling	Bare Flywheel	Driveshaft and Guard, SC2160A
Electronic Control Module	24V-DC, Energized to Stop, Primary ECM always Powered on	
Exhaust Flex Connection*	Stainless Steel Flex, 150# ANSI Flanged Connection, 8"	Stainless Steel Flex, 150# ANSI Flanged Connection, 10"
Flywheel Housing	SAE #1	
Flywheel Power Take Off	11.5" SAE Industrial Flywheel Connection	
Fuel Connections	Fire Resistant, Flexible, USA Coast Guard Approved, Supply and Return Lines	Stainless Steel, Braided, cUL Listed, Supply and Return Lines
Fuel Filter	Primary Filter with Priming Pump	
Fuel Injection System	Unit Injector	
Engine Heater	240V-AC, 2500 Watt	120V-AC, 2500 Watt
Governor, Speed	Electronic, Dual Electronic Engine Control Modules	
Heat Exchanger	Tube and Shell Type, 60 PSI (4 BAR), NPT(F) Connections – Sea/Salt Water Compatible	
Instrument Panel	Multimeter to Display English and Metric, Tachometer, Hourmeter, Water Temperature, Oil Pressure and One (1) Voltmeter with Toggle Switch, Front Opening	
Junction Box	Integral with Instrument Panel; For DC Wiring Interconnection to Engine Controller	
Lube Oil Cooler	Engine Water Cooled, Plate Type	
Lube Oil Filter	Full Flow with By-Pass Valve	
Lube Oil Pump	Gear Driven, Gear Type	
Manual Start Control	On Instrument Panel with Control Position Warning Light	
Overspeed Control	Electronic, Factory Set, Not Field Adjustable	
Raw Water Solenoid Operation	Automatic from Fire Pump Controller and from Engine Instrument Panel	
Run – Stop Control	On Instrument Panel with Control Position Warning Light	
Starters	One (1) 24V-DC with Two (2) Start Contactors	
Throttle Control	Adjustable Speed Control by Increase/Decrease Button, Tamper Proof in Instrument Panel	
Water Pump	Centrifugal Type, Gear Driven	

Abbreviations : DC – Direct Current, AC – Alternating Current, SAE – Society of Automotive Engineers, NPT(F) – National Pipe Tapered Thread (Female), NPT(M) – National Pipe Tapered Thread (Male), ANSI – American National Standards Institute

Note : Engine Controller needs two (2) additional signals: Injector Failure, Alternate ECM Selected

*JX6H-UFADF0/60/K0/N0/P0/88 All provided with orifice plate mounted in flex exhaust.

0-FP-CP-001
Diesel Fire Water
Pump - Common
Area

MODEL NOMENCLATURE (10 Digit Models)

J X 6 H - UF A D F0

- J — John Deere Base Engine
- X — 650 Series
- 6 — 6 Cylinder
- H — Heat Exchanger Cooled
- UF — UL Listed and FM Approved
- A — Built in USA
- D — EPA Tier 3 Certified
- F0 — Power Curve Number

CLARKE®

CLARKE Fire Protection Products, Inc.
3133 E. Kemper Rd., Cincinnati, Ohio 45241
United States of America
Tel +1-513-475-FIRE(3473) Fax +1-513-771-0726
www.clarkefire.com

CLARKE UK, Ltd.
Grange Works, Lomond Rd., Coatbridge, ML5-2NN
United Kingdom
Tel +44-1236-429946 Fax +44-1236-427274
www.clarkefire.com

C133423 revl
10APR12

Specifications and information contained in this brochure subject to change without notice.

Rating Specific Emissions Data - John Deere Power Systems

JOHN DEERE

Nameplate Rating Information

Clarke Model	JX6H-UFAD88
Power Rating (BHP / kW)	617 / 460
Certified Speed (RPM)	1760

Rating Data

Rating	6135HFC48B	
Certified Power (kW)	460	
Rated Speed	1760	
Vehicle Model Number	Clarke Fire Pump	
Units	g/kW-hr	g/hp-hr
NOx	3.5	2.6
HC	0.1	0.1
NOx + HC	3.6	2.7
Pm	0.12	0.09
CO	0.7	0.5

Certificate Data

Engine Model Year	2012
EPA Family Name	CJDXL13.5103
EPA JD Name	650HAA
EPA Certificate Number	CJDXL13.5103-020
CARB Executive Order	Not Applicable
Parent of Family	6135HF485A
Units	g/kW-hr
NOx	3.3
HC	0.1
NOx + HC	3.4
Pm	0.10
CO	0.6

* The emission data listed is measured from a laboratory test engine according to the test procedures of 40 CFR 89 or 40 CFR 1039, as applicable. The test engine is intended to represent nominal production hardware, and we do not guarantee that every production engine will have identical test results. The family parent data represents multiple ratings and this data may have been collected at a different engine speed and load. Emission results may vary due to engine manufacturing tolerances, engine operating conditions, fuels used, or other conditions beyond our control.

This information is property of Deere & Company. It is provided solely for the purpose of obtaining certification or permits of Deere powered equipment. Unauthorized distribution of this information is prohibited

DATUMS:

-A- - MOUNTING FACE OF FLYWHEEL

-B- - ENGINE CRANKSHAFT HORIZONTAL CENTERLINE

-C- - ENGINE CRANKSHAFT VERTICAL CENTERLINE

- CENTER OF GRAVITY OF ENGINE

- CLOCKWISE ROTATION WHEN VIEWED FROM FRONT OF ENGINE

CAUTION:

ALL PLUMBING MUST BE SUPPORTED AND/OR ISOLATED SO THAT NO WEIGHT OR STRESS IS APPLIED TO ANY ENGINE COMPONENT

ATTENTION

REFER TO THE SPECIFIC MODEL "INSTALLATION AND OPERATION DATA" FOR INSTALLATION GUIDELINES

"TRWA" (TURBOCHARGED w/ RAW WATER AFTERCOOLING) MODELS	JX6H-UFADF0, -UFAD60, JX6H-UFADK0*, -UFADN0, JX6H-UFADP0, -UFAD88

(*) INDICATES PLD ENGINE MODEL ONLY

Attachment 3
Revision 1
Page 5 of 6

0-FP-CP-001
Diesel Fire Water Pump
Common Area

FOR ENGINES BUILT IN USA BEGINNING JANUARY 2013

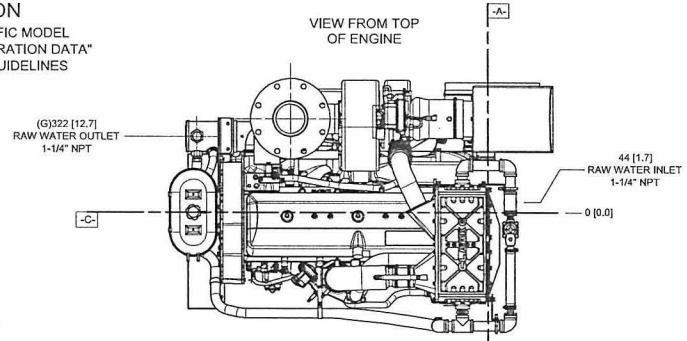

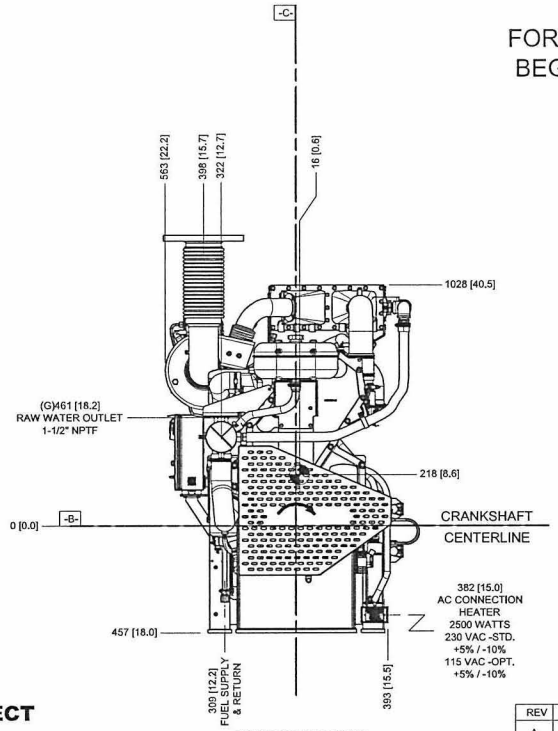

VIEW FROM FRONT OF ENGINE

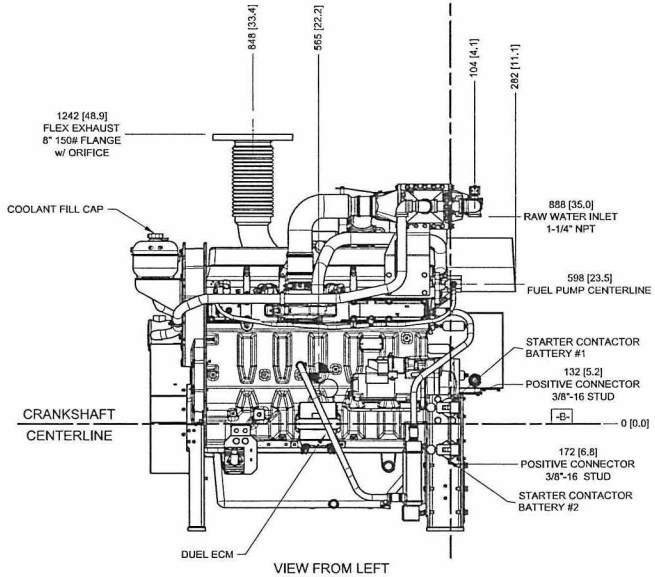

VIEW FROM LEFT SIDE OF ENGINE

DRAWING SUBJECT TO CHANGE WITHOUT NOTICE

DO NOT SCALE

REV	DESCRIPTION	ECN#	DWN	APVD	DATE
A	ISSUED ENGINEERING DRAWING	574	MAL	RTE	02SEP08
B	GENERAL CHANGES MADE TO DRAWING	574	MWL	RTE	27FEB09
C	FLYWHEEL HOUSING WAS INCORRECTLY LABELED AS SAE #2 (PAGE 2)	1858	MJD	MJD	04DEC09
D	TEMP CONTROL LAYOUT CHANGED	2260	JCA	RTE	09JUN11
E	REMOVED JX6H-UFADK0 AS NON-PLD	—	MLL	KRW	18JUL11
F	*FLYWHEEL DIM. REF. B.C. INSTEAD OF O.D.	—	DGP	KRW	02AUG11
G	RAW WATER OUTLET WAS 1-1/4" NPTF	2649	MOH	RTE	29OCT12

THIS DRAWING AND THE INFORMATION HEREON ARE OUR PROPERTY AND MAY BE USED BY OTHERS ONLY AS AUTHORIZED BY US. UNPUBLISHED—ALL RIGHTS RESERVED UNDER THE COPYRIGHT LAWS.

MACHINE TOLERANCE

DECIMAL	mm	inch
X	± 1.5	
X.X	± 0.3	± 0.01
X.XX	± 0.3	± 0.01
X.XXX	± 0.025	± 0.001
X.XXXX		± 0.0001

ANGULAR: ± 0.5°

FABRICATION TOLERANCE

DECIMAL	mm	inch
X	± 3	
X.X	± 1.5	± 0.12
X.XX		± 0.06

ANGULAR: ± 1.0°

MS1 MS2 CONTROLLED DRAWING

CLARKE *Fire Protection Products, Inc.*

DRWN	MWLEMING
DATE	8/1/2008
ENGR.	KJKUNKLER
MATERIAL	
ASSEMBLY	

NAME: INSTALLATION DRAWING, FIRE PUMP ENGINE JX6H TIER 3 MODELS

PART NO. D626 REV. G

SCALE: NTS UNITS: MM [INCH] PAGE 1 OF 2

0-FP-CP-001
Diesel Fire Water Pump
Common Area

FOR ENGINE SPECIFIC OPTIONS
SEE www.CLARKEFIRE.com

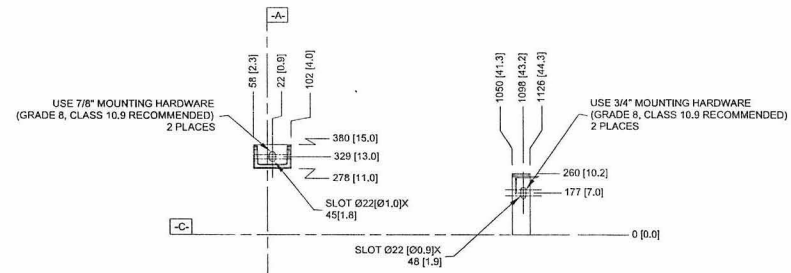

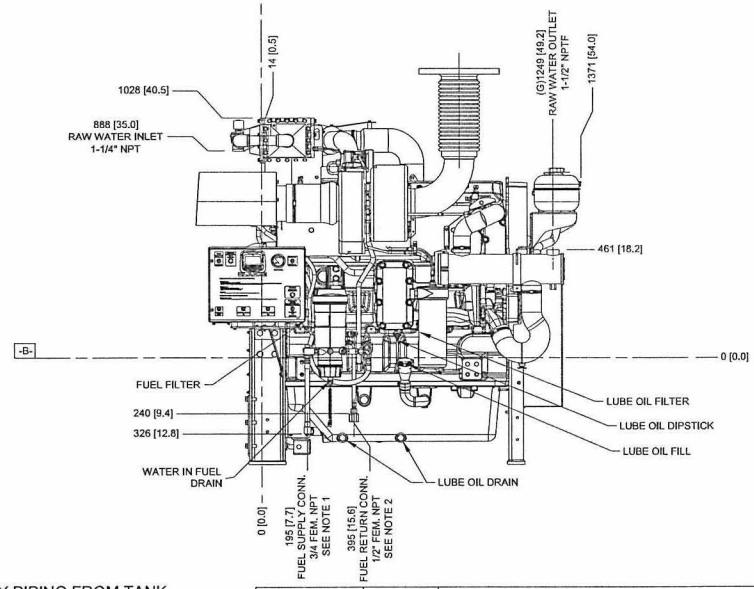

DETAIL DATUM -A-

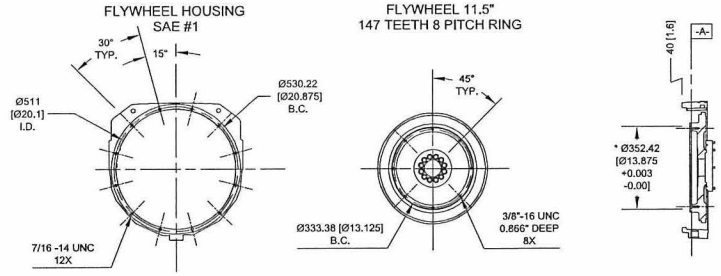

NOTES:
1. FUEL SUPPLY PIPING FROM TANK TO ENGINE SHOULD BE 3/4" MINIMUM PIPE DIAMETER.
2. FUEL RETURN PIPING FROM ENGINE TO TANK SHOULD BE 1/2" MINIMUM PIPE DIAMETER.

THIS DRAWING AND THE INFORMATION HEREON ARE OUR PROPERTY AND MAY BE USED BY OTHERS ONLY AS AUTHORIZED BY US. UNPUBLISHED--ALL RIGHTS RESERVED UNDER THE COPYRIGHT LAWS.

MACHINE TOLERANCE

DECIMAL	mm	Inch
X.	± 1.6	
X.X	± 0.4	± 0.06
X.XX	± 0.3	± 0.03
X.XXX	± 0.05	± 0.01
X.XXXX		± 0.001

ANGULAR: ± 0.5°

FABRICATION TOLERANCE

DECIMAL	mm	Inch
X.	± 3	
X.X	± 1.5	± 0.12
X.XX		± 0.06

ANGULAR: ± 1.0°

CONTROLLED DRAWING

CLARKE
Fire Protection Products, Inc.

DRAWN: MWLEMING
DATE: 8/1/2008
ENGR: KJKUNKLER
MATERIAL
ASSEMBLY

NAME: INSTALLATION DRAWING, FIRE PUMP ENGINE JX6H TIER 3 MODELS

PART NO.: D626
REV: G
SCALE: NTS
UNITS: MM [INCH]
PAGE 2 OF 2

SELECTION TABLES
Horizontal Split Case Fire Pump
Diesel Engine Drive

1-FP-CP-001
2-FP-CP-001
Diesel Fire Water Pump - Power Blocks 1 & 2

	Diesel Driven							
	Pressure							
Flow GPM	(PSI)	(TDH)	Speed (RPM)	Horse Power (BHP)	Pump Size & Model	Engine Model	Engine HP	WT.
50000 GPM	88	203	1750	363	10-491-20	JW6H-UFAD70	376	7634
	90	208	1750	368	10-491-20	JW6H-UFAD70	376	7634
	91	210	1750	348	10-481-18D	JW6H-UFADJ0	350	4294
	95	219	1750	380	10-491-20	JW6H-UFAD80	422	7634
			1750	367	10-481-18D	JW6H-UFAD70	376	4294
	100	231	1750	396	10-491-20	JW6H-UFAD80	422	7634
			1750	394	10-481-18D	JW6H-UFAD80	422	4294
	101	233	1750	400	10-491-20	JW6H-UFAD80	422	7634
	102	236	1750	404	10-491-20	JW6H-UFAD80	422	7634
			1900	438	10-491-20	CFP15E-F10	488	9719
	105	243	1750	415	10-491-20	JW6H-UFAD80	422	7634
			1900	452	10-491-20	CFP15E-F10	488	9719
			1750	419	10-481-18D	JW6H-UFAD80	422	4294
	110	254	1750	436	10-491-20	JX6H-UFADF0	460	8790
			1900	476	10-491-20	CFP15E-F10	488	9719
			1750	445	10-481-18D	JX6H-UFADF0	460	5450
	114	263	1750	456	10-491-20	JX6H-UFADF0	460	8790
			1900	496	10-491-20	CFP15E-F20	524	9719
	115	266	1750	460	10-491-20	JX6H-UFADF0	460	8790
			1900	501	10-491-20	CFP15E-F20	524	9719
			1750	469	10-481-18D	JX6H-UFAD60	510	5450
	120	277	1750	486	10-491-20	JX6H-UFAD60	510	8790
			1900	526	10-491-20	CFP15E-F30	575	9719
			1750	499	10-481-18D	JX6H-UFAD60	510	5450
	125	289	1750	515	10-491-20	JX6H-UFADN0	542	8845
			1900	553	10-491-20	CFP15E-F30	575	9719
			1750	529	10-481-18D	JX6H-UFADN0	542	5530
	130	300	1750	545	10-491-20	JX6H-UFADP0	575	8845
			1900	579	10-491-20	CFP15E-F40	610	9719
			1750	553	10-481-18D	JX6H-UFADP0	575	5530
	135	312	1750	576	10-491-20	JX6H-UFAD88	617	8790
			1900	607	10-491-20	CFP15E-F40	610	9719
	140	323	1750	609	10-491-20	JX6H-UFAD88	617	8790
			1900	635	10-491-20	Cat 18 (700)	700	10640
	145	335	1750	643	10-491-20	Cat 18 (700)	700	10640
			1900	663	10-491-20	Cat 18 (700)	700	10640
	150	347	1750	670	10-491-20	Cat 18 (700)	700	10640
			1900	693	10-491-20	Cat 18 (700)	700	10640
	155	358	1750	699	10-491-20	Cat 18 (700)	700	10640
			1900	723	10-491-20	Cat 18 (800)	800	10640
	160	370	1750	728	10-491-20	Cat 18 (800)	800	10640
			1900	753	10-491-20	Cat 18 (800)	800	10640
	165	381	1750	757	10-491-20	Cat 18 (800)	800	10640
			1900	784	10-491-20	Cat 18 (800)	800	10640
	170	393	1750	785	10-491-20	Cat 18 (800)	800	10640
			1900	815	10-491-20	RTF	860	10640
	175	404	1750	820	10-491-20	RTF	RTF	RTF
			1900	846	10-491-20	RTF	860	10640
	180	416	1750	845	10-491-20	RTF	RTF	RTF
			1900	877	10-491-20	RTF	RTF	RTF
	185	427	1750	875	10-491-20	RTF	RTF	RTF
			1900	908	10-491-20	RTF	RTF	RTF
	190	439	1750	905	10-491-20	RTF	RTF	RTF
			1900	938	10-491-20	RTF	RTF	RTF
	195	450	1750	935	10-491-20	RTF	RTF	RTF
			1900	969	10-491-20	RTF	RTF	RTF
	200	462	1900	1000	10-491-20	RTF	RTF	RTF
	205	474	1900	1031	10-491-20	RTF	RTF	RTF
	210	485	1900	1062	10-491-20	RTF	RTF	RTF
	215	497	1900	1093	10-491-20	RTF	RTF	RTF
	220	508	1900	1124	10-491-20	RTF	RTF	RTF
	221	511	1900	1130	10-491-20	RTF	RTF	RTF

*UL listed only.

MODELS

JX6H-UFADF0 JX6H-UFADN0
JX6H-UFAD60 JX6H-UFADP0
JX6H-UFADK0 JX6H-UFAD88

FM-UL-cUL APPROVED RATINGS BHP/*KW*

JX6H MODEL ♦	RATED SPEED 1760		RATED SPEED 2100		US-EPA (NSPS) Available Until ●
UFADF0	460	*343*	488	*364*	*No Expiration*
UFAD60	510	*380*	525	*392*	*No Expiration*
UFADN0	542	*404*	575	*429*	*No Expiration*
UFADP0	575	*429*	600	*447*	*No Expiration*
UFAD88	617	*460*			*No Expiration*

● USA EPA (NSPS) Tier 3 Emissions Certified Off-Road (40 CFR Part 89) and NSPS Stationary (40 CFR Part 60 Sub Part IIII). Meet EU Stage IIIA emission levels.

♦ All Models are available for Export

1-FP-CP-001
2-FP-CP-001
Diesel Fire Water Pump - Power Blocks 1 & 2

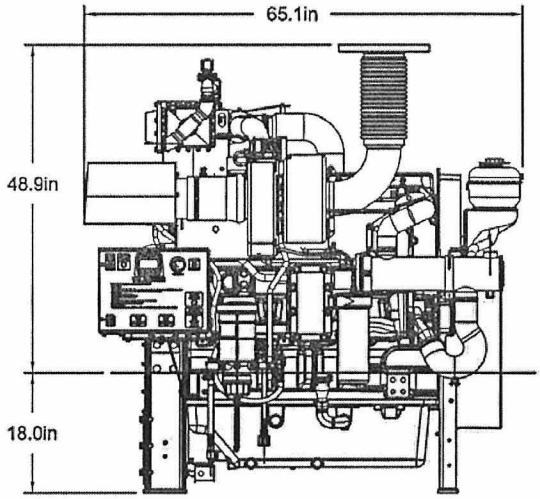

OVERALL WIDTH
41.7in

SPECIFICATIONS

ITEM	JX6H MODELS UFADF0	UFAD60	UFADN0	UFADP0	UFAD88
Number of Cylinders	6				
Aspiration	TRWA				
Rotation*	CW				
Weight – lb (kg)	3315 (1500)				
Compression Ratio	16.0:1				
Displacement – cu. in. (l)	824 (13.5)				
Engine Type	4 Stroke Cycle – Inline Construction				
Bore & Stroke – in. (mm)	5.20 X 6.50 (132 X 165)				
Installation Drawing	D626				
Wiring Diagram AC	C07651				
Wiring Diagram DC	C071360, C071361, C071371				
Engine Series	John Deere 6135 Series Power Tech Plus				
Speed Interpolation	N/A				

Abbreviations: CW – Clockwise TRWA – Turbocharged with Raw Water Aftercooling N/A – Not Available

*Rotation viewed from Heat Exchanger / Front of engine

CERTIFIED POWER RATING

- Each engine is factory tested to verify power and performance.
- FM-UL power ratings are shown at specific speeds, Clarke engines can be applied at a single rated RPM setting ± 50 RPM.

ENGINE RATINGS BASELINES

- Engines are to be used for stationary emergency standby fire pump service only. Engines are to be tested in accordance with NFPA 25.
- Engines are rated at standard SAE conditions of 29.61 in. (752.1 mm) Hg barometer and 77°F (25°C) inlet air temperature [approximates 300 ft. (91.4 m) above sea level] by the testing laboratory (see SAE Standard J 1349).
- A deduction of 3 percent from engine horsepower rating at standard SAE conditions shall be made for diesel engines for each 1000 ft. (305 m) altitude above 300 ft. (91.4 m)
- A deduction of 1 percent from engine horsepower rating as corrected to standard SAE conditions shall be made for diesel engines for every 10°F (5.6°C) above 77°F (25°C) ambient temperature.

c UL us

Meets NFPA 20 Requirements

FM APPROVED

MODELS
JX6H-UFADF0 JX6H-UFADN0
JX6H-UFAD60 JX6H-UFADP0
JX6H-UFADK0 JX6H-UFAD88

ENGINE EQUIPMENT

EQUIPMENT	STANDARD	OPTIONAL
Air Cleaner	Direct Mounted, Washable, Indoor Service with Drip Shield	Disposable, Drip Proof, Indoor Service Outdoor Type, Single or Two Stage
Alternator	24V-DC, 40 Amps with Poly-Vee Belt and Guard	
Exhaust Protection	Metal Guards on Manifolds and Turbocharger	
Coupling	Bare Flywheel	Driveshaft and Guard, SC2160A
Electronic Control Module	24V-DC, Energized to Stop, Primary ECM always Powered on	
Exhaust Flex Connection*	Stainless Steel Flex, 150# ANSI Flanged Connection, 8"	Stainless Steel Flex, 150# ANSI Flanged Connection, 10"
Flywheel Housing	SAE #1	
Flywheel Power Take Off	11.5" SAE Industrial Flywheel Connection	
Fuel Connections	Fire Resistant, Flexible, USA Coast Guard Approved, Supply and Return Lines	Stainless Steel, Braided, cUL Listed, Supply and Return Lines
Fuel Filter	Primary Filter with Priming Pump	
Fuel Injection System	Unit Injector	
Engine Heater	240V-AC, 2500 Watt	120V-AC, 2500 Watt
Governor, Speed	Electronic, Dual Electronic Engine Control Modules	
Heat Exchanger	Tube and Shell Type, 60 PSI (4 BAR), NPT(F) Connections – Sea/Salt Water Compatible	
Instrument Panel	Multimeter to Display English and Metric, Tachometer, Hourmeter, Water Temperature, Oil Pressure and One (1) Voltmeter with Toggle Switch, Front Opening	
Junction Box	Integral with Instrument Panel; For DC Wiring Interconnection to Engine Controller	
Lube Oil Cooler	Engine Water Cooled, Plate Type	
Lube Oil Filter	Full Flow with By-Pass Valve	
Lube Oil Pump	Gear Driven, Gear Type	
Manual Start Control	On Instrument Panel with Control Position Warning Light	
Overspeed Control	Electronic, Factory Set, Not Field Adjustable	
Raw Water Solenoid Operation	Automatic from Fire Pump Controller and from Engine Instrument Panel	
Run – Stop Control	On Instrument Panel with Control Position Warning Light	
Starters	One (1) 24V-DC with Two (2) Start Contactors	
Throttle Control	Adjustable Speed Control by Increase/Decrease Button, Tamper Proof in Instrument Panel	
Water Pump	Centrifugal Type, Gear Driven	

Abbreviations : DC – Direct Current, AC – Alternating Current, SAE – Society of Automotive Engineers, NPT(F) – National Pipe Tapered Thread (Female), NPT(M) – National Pipe Tapered Thread (Male), ANSI – American National Standards Institute

Note : Engine Controller needs two (2) additional signals: Injector Failure, Alternate ECM Selected

*JX6H-UFADF0/60/K0/N0/P0/88 All provided with orifice plate mounted in flex exhaust.

MODEL NOMENCLATURE (10 Digit Models)

J X 6 H - UF A D F0

- J — John Deere Base Engine
- X — 650 Series
- 6 — 6 Cylinder
- H — Heat Exchanger Cooled
- UF — UL Listed and FM Approved
- A — Built in USA
- D — EPA Tier 3 Certified
- F0 — Power Curve Number

1-FP-CP-001
2-FP-CP-001
Diesel Fire Water Pump - Power Blocks 1 & 2

CLARKE®

CLARKE Fire Protection Products, Inc.
3133 E. Kemper Rd., Cincinnati, Ohio 45241
United States of America
Tel +1-513-475-FIRE(3473) Fax +1-513-771-0726
www.clarkefire.com

CLARKE UK, Ltd.
Grange Works, Lomond Rd., Coatbridge, ML5-2NN
United Kingdom
Tel +44-1236-429946 Fax +44-1236-427274
www.clarkefire.com

C133423 revl
10APR12

Specifications and information contained in this brochure subject to change without notice.

Rating Specific Emissions Data - John Deere Power Systems

JOHN DEERE

1-FP-CP-001
2-FP-CP-001
Diesel Fire Water Pump
Power Blocks 1 & 2

Nameplate Rating Information

Clarke Model	JX6H-UFAD88
Power Rating (BHP / kW)	617 / 460
Certified Speed (RPM)	1760

Rating Data

Rating	6135HFC48B	
Certified Power (kW)	460	
Rated Speed	1760	
Vehicle Model Number	Clarke Fire Pump	
Units	g/kW-hr	g/hp-hr
NOx	3.5	2.6
HC	0.1	0.1
NOx + HC	3.6	2.7
Pm	0.12	0.09
CO	0.7	0.5

Certificate Data

Engine Model Year	2012
EPA Family Name	CJDXL13.5103
EPA JD Name	650HAA
EPA Certificate Number	CJDXL13.5103-020
CARB Executive Order	Not Applicable
Parent of Family	6135HF485A
Units	g/kW-hr
NOx	3.3
HC	0.1
NOx + HC	3.4
Pm	0.10
CO	0.6

* The emission data listed is measured from a laboratory test engine according to the test procedures of 40 CFR 89 or 40 CFR 1039, as applicable. The test engine is intended to represent nominal production hardware, and we do not guarantee that every production engine will have identical test results. The family parent data represents multiple ratings and this data may have been collected at a different engine speed and load. Emission results may vary due to engine manufacturing tolerances, engine operating conditions, fuels used, or other conditions beyond our control.

This information is property of Deere & Company. It is provided solely for the purpose of obtaining certification or permits of Deere powered equipment. Unauthorized distribution of this information is prohibited

DATUMS:

-A- - MOUNTING FACE OF FLYWHEEL

-B- - ENGINE CRANKSHAFT HORIZONTAL CENTERLINE

-C- - ENGINE CRANKSHAFT VERTICAL CENTERLINE

- CENTER OF GRAVITY OF ENGINE

- CLOCKWISE ROTATION WHEN VIEWED FROM FRONT OF ENGINE

CAUTION:

ALL PLUMBING MUST BE SUPPORTED AND/OR ISOLATED SO THAT NO WEIGHT OR STRESS IS APPLIED TO ANY ENGINE COMPONENT

"TRWA" (TURBOCHARGED w/ RAW WATER AFTERCOOLING) MODELS	JX6H-UFADF0, -UFAD60, JX6H-UFADK0*, -UFADN0, JX6H-UFADP0, -UFAD88

(*) INDICATES PLD ENGINE MODEL ONLY

ATTENTION

REFER TO THE SPECIFIC MODEL "INSTALLATION AND OPERATION DATA" FOR INSTALLATION GUIDELINES

Attachment 4
Revision 1
Page 5 of 6

1-FP-CP-001 & 2-FP-CP-001
Diesel Fire Water Pump
Power Blocks 1 & 2

FOR ENGINES BUILT IN USA
BEGINNING JANUARY 2013

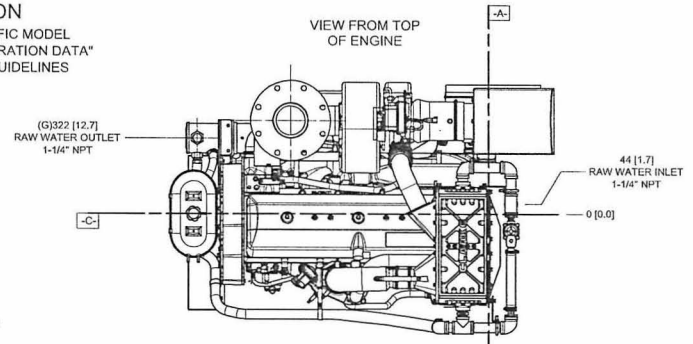

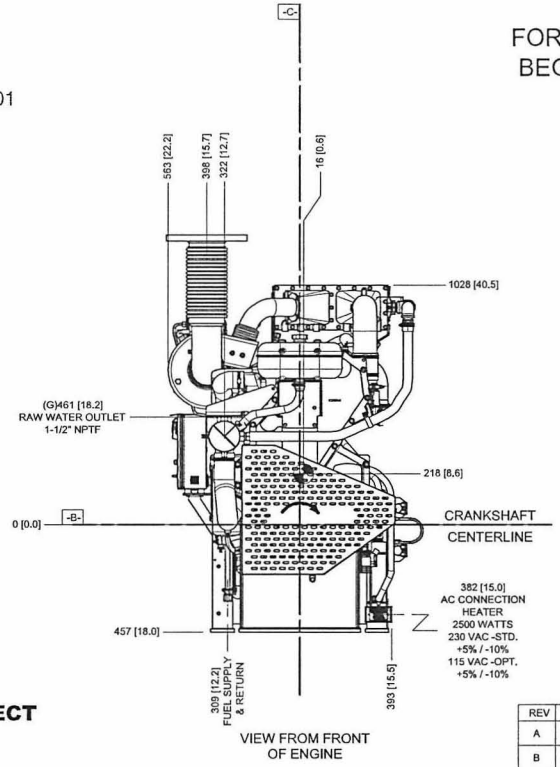

VIEW FROM FRONT OF ENGINE

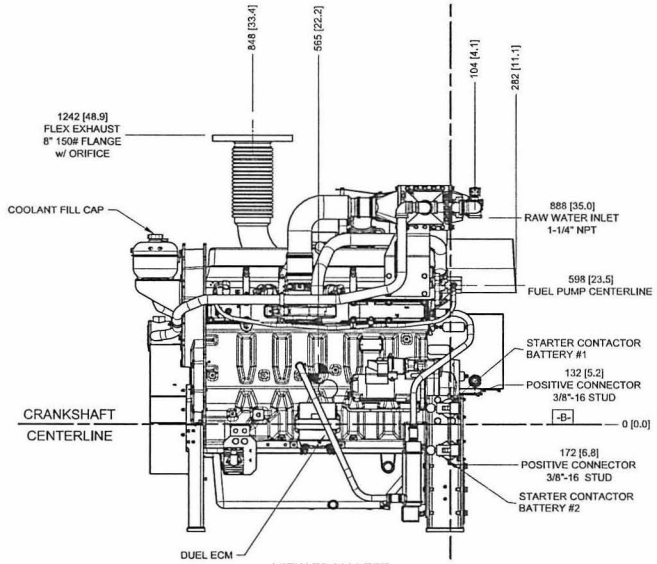

VIEW FROM LEFT SIDE OF ENGINE

DRAWING SUBJECT TO CHANGE WITHOUT NOTICE

DO NOT SCALE

REV	DESCRIPTION	ECN#	DWN	APVD	DATE
A	ISSUED ENGINEERING DRAWING	574	MAL	TTF	02SEP08
B	GENERAL CHANGES MADE TO DRAWING	574	MWL	TTF	27FEB09
C	FLYWHEEL HOUSING WAS INCORRECTLY LABELED AS SAE #2 (PAGE 2)	1858	MJD	MJD	04DEC09
D	TEMP CONTROL LAYOUT CHANGED	2260	JCA	TTF	09JUN11
E	REMOVED JX6H-UFADK0 AS NON-PLD	—	MLL	KRW	18JUL11
F	*FLYWHEEL DIM. REF. B.C. INSTEAD OF O.D.	—	DGP	KRW	02AUG11
G	RAW WATER OUTLET WAS 1-1/4" NPTF	2649	MOH	TTF	29OCT12

THE DRAWING AND THE INFORMATION HEREON ARE OUR PROPERTY AND MAY BE USED BY OTHERS ONLY AS AUTHORIZED BY US. UNPUBLISHED—ALL RIGHTS RESERVED UNDER THE COPYRIGHT LAWS.

MACHINE TOLERANCE

DECIMAL	mm	Inch
X.	± 1.5	
X.X	± 0.8	± 0.06
X.XX	± 0.3	± 0.03
X.XXX	± 0.025	± 0.01
X.XXXX		± 0.001

ANGULAR: ± 0.5°

FABRICATION TOLERANCE

DECIMAL	mm	Inch
X.	± 3	
X.X	± 1.5	± 0.12
X.XX		± 0.06

ANGULAR: ± 1.0°

YES / NO CONTROLLED DRAWING

CLARKE
Fire Protection Products, Inc.

DRAWN: MWLEMING
DATE: 8/1/2008
ENGR: KJKUNKLER
MATERIAL
ASSEMBLY

NAME: INSTALLATION DRAWING, FIRE PUMP ENGINE JX6H TIER 3 MODELS

PART NO.: D626 REV: G

SCALE: NTS UNITS: MM [INCH] PAGE 1 OF 2

Attachment 4
Revision 1
Page 6 of 6

1-FP-CP-001 & 2-FP-CP-001
Diesel Fire Water Pump
Power Blocks 1 & 2

FOR ENGINE SPECIFIC OPTIONS
SEE www.CLARKEFIRE.com

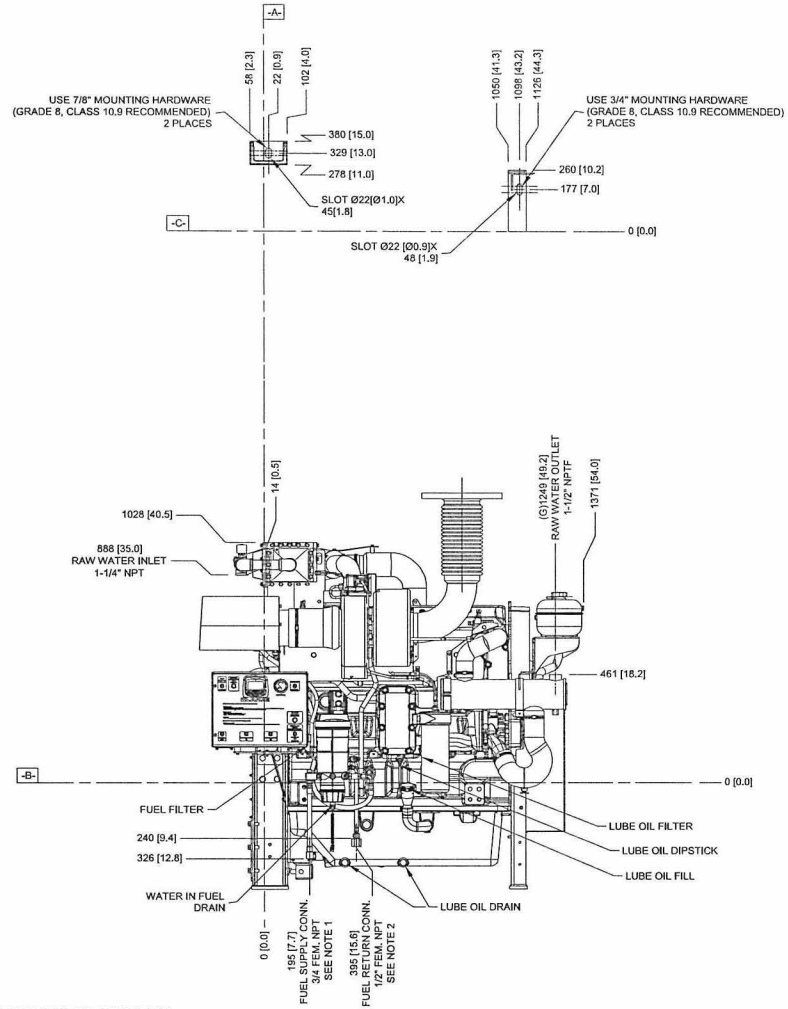

DETAIL DATUM -A-

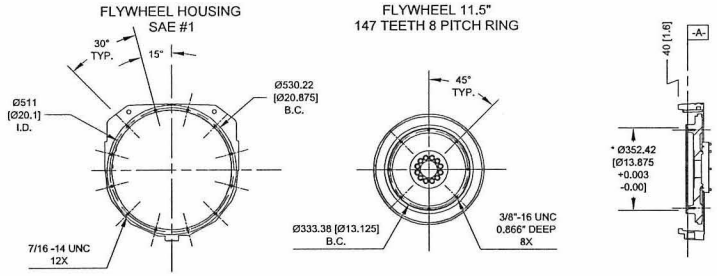

NOTES:
1. FUEL SUPPLY PIPING FROM TANK TO ENGINE SHOULD BE 3/4" MINIMUM PIPE DIAMETER.
2. FUEL RETURN PIPING FROM ENGINE TO TANK SHOULD BE 1/2" MINIMUM PIPE DIAMETER.

THIS DRAWING AND THE INFORMATION HEREON ARE OUR PROPERTY AND MAY BE USED BY OTHERS ONLY AS AUTHORIZED BY US. UNPUBLISHED—ALL RIGHTS RESERVED UNDER THE COPYRIGHT LAWS.

YES / NO CONTROLLED DRAWING

CLARKE
Fire Protection Products, Inc.

MACHINE TOLERANCE		
DECIMAL	mm	Inch
X	± 1.5	
X.X	± 0.4	± 0.06
X.XX	± 0.3	± 0.03
X.XXX	± 0.25	± 0.01
X.XXXX		± 0.001
ANGULAR: ± 0.5°		

FABRICATION TOLERANCE		
DECIMAL	mm	Inch
X	± 3	
X.X	± 1.5	± 0.12
X.XX		± 0.06
ANGULAR: ± 1.0°		

DRWN	MWLEMING
DATE	8/1/2008
ENGR	KJKUNKLER
MATERIAL	
ASSEMBLY	

NAME: INSTALLATION DRAWING, FIRE PUMP ENGINE JX6H TIER 3 MODELS

PART NO. D626 REV G

SCALE NTS | UNITS MM [INCH] | PAGE 2 OF 2

Attachment 4.1A-4

NTP Boiler Specifications

(see Attachment 4.1A-2)

Attachment 4.1A-5

Wet SAC Specifications

Attachment 4.1A-6

Diesel Fuel Analysis

Low Sulfur Diesel Fuel Characteristics

Property	Typical Value
Aromatics, V%	20.9
Aromatics, Wt%	21.4
Sulfur, ppm	11
PNA, Wt%	2.77
T10, deg C	199
T50, deg C	248
T90, deg C	317
Density, g/ml	0.8285
CA-Methane Min Limit %	88
CA-Ethane Max Limit %	6
CA-Propane Max Limit	3
HHV, btu/gallon	139,000
Ref: BP-ARCO	

Attachment 4.1A-7

Natural Gas Fuel Analysis

Typical Natural Gas Properties

Component Analysis		Chemical Analysis	
Component	Average Concentration, Volume	Constituent	Percent by Weight
C_2H_6	1.3%	H	24 %
C_3H_8	0.2%	N	1 %
Iso-C_4H_{10}	0.04%	O	2 %
n-C_4H_{10}	0.04%	S	0.75 gr/100 scf
iso-C_5H_{12}	0.01%	Higher Heating Value	1,020 Btu/scf
n-C_5H_{12}	0.01%		22,840 Btu/lb
C_6+	0.01%		
N_2	0.30%		
CO_2	0.99%		
S	<0.0001%		
Total	100%		

Attachment 4.1A-8

SCAQMD Vehicle Statistics Data

South Coast Air Basin

Surface Area = 6480 square miles

Parameter	1980	1985	1990	1995	2000	2005	2010	2015	2020
Population	10604663	11698030	13083594	13745292	14685008	15954332	16839106	17738828	18638550
Avg. Daily VMT/1000	161397	228818	282561	292884	323009	393767	377734	397696	414267

Table D-78

Los Angeles County

Surface Area = 2538 square miles

Parameter	1980	1985	1990	1995	2000	2005	2010	2015	2020
Population	7402796	8030358	8629028	8839010	9275290	9877053	10184503	10523307	10862110
Avg. Daily VMT/1000	112914	156791	182709	181641	193986	229225	211882	219707	225189

Table D-79 A portion of Los Angeles County lies within the Mojave Desert Air Basin.

Orange County

Surface Area = 789 square miles

Parameter	1980	1985	1990	1995	2000	2005	2010	2015	2020
Population	1944800	2166300	2411976	2604532	2863394	3056814	3227836	3374051	3520265
Avg. Daily VMT/1000	28849	43196	55940	60031	67138	78333	78937	82529	85272

Table D-80

Riverside County

Surface Area = 2024 square miles

Parameter	1980	1985	1990	1995	2000	2005	2010	2015	2020
Population	521774	651556	925658	1070642	1206858	1487982	1733251	1990947	2248643
Avg. Daily VMT/1000	8295	12324	21330	25384	32792	47891	49080	54224	58942

Table D-81 Portions of Riverside County lie within the Mojave Desert and Salton Sea Air Basins.

San Bernardino County

Surface Area = 1129 square miles

Parameter	1980	1985	1990	1995	2000	2005	2010	2015	2020
Population	735293	849816	1116932	1231108	1339466	1532483	1693516	1850524	2007532
Avg. Daily VMT/1000	11339	16507	22582	25828	29093	38318	37835	41236	44864

Table D-82 A portion of San Bernardino County lies within the Mojave Desert Air Basin.

2010 Estimated Annual Average Emissions

SOUTH COAST AIR BASIN

All emissions are represented in Tons per Day and reflect the most current data provided to ARB.

See detailed information.

Start a new query.

STATIONARY SOURCES	TOG	ROG	CO	NOX	SOX	PM	PM10	PM2.5
FUEL COMBUSTION	26.6	5.8	34.1	46.5	8.2	5.6	5.5	5.4
WASTE DISPOSAL	70.8	9.1	1.1	2.1	0.5	1.3	0.7	0.3
CLEANING AND SURFACE COATINGS	50.3	40.7	0.1	0.2	0.0	0.6	0.6	0.5
PETROLEUM PRODUCTION AND MARKETING	38.2	33.2	8.9	4.6	6.6	3.8	2.5	2.1
INDUSTRIAL PROCESSES	22.2	20.2	2.5	2.5	2.8	25.3	15.2	7.0
*** TOTAL STATIONARY SOURCES**	**208.1**	**109.0**	**46.8**	**55.9**	**18.1**	**36.6**	**24.5**	**15.4**
AREAWIDE SOURCES	**TOG**	**ROG**	**CO**	**NOX**	**SOX**	**PM**	**PM10**	**PM2.5**
SOLVENT EVAPORATION	148.2	129.4	-	-	-	0.0	0.0	0.0
MISCELLANEOUS PROCESSES	77.7	14.7	112.3	23.1	0.9	433.3	219.5	53.1
*** TOTAL AREAWIDE SOURCES**	**225.9**	**144.1**	**112.3**	**23.1**	**0.9**	**433.4**	**219.5**	**53.1**
MOBILE SOURCES	**TOG**	**ROG**	**CO**	**NOX**	**SOX**	**PM**	**PM10**	**PM2.5**
ON-ROAD MOTOR VEHICLES	201.1	182.8	1817.6	400.3	2.1	25.0	24.7	17.7
OTHER MOBILE SOURCES	153.2	140.1	973.2	262.9	18.0	18.5	17.8	15.7
*** TOTAL MOBILE SOURCES**	**354.4**	**322.9**	**2790.8**	**663.2**	**20.1**	**43.5**	**42.5**	**33.4**
NATURAL (NON-ANTHROPOGENIC) SOURCES	**TOG**	**ROG**	**CO**	**NOX**	**SOX**	**PM**	**PM10**	**PM2.5**
NATURAL SOURCES	100.6	86.5	164.2	5.0	1.5	17.3	16.6	14.1
*** TOTAL NATURAL (NON-ANTHROPOGENIC) SOURCES**	**100.6**	**86.5**	**164.2**	**5.0**	**1.5**	**17.3**	**16.6**	**14.1**
GRAND TOTAL FOR SOUTH COAST AIR BASIN	**889.0**	**662.5**	**3114.1**	**747.1**	**40.6**	**530.7**	**303.1**	**116.0**

APPENDIX 4.1B

Modeling Support Data

Tables presented in this Appendix are as follows:

4.1B-1	Operations Impact Summary
4.1B-2	Construction Impact Summary
4.1B-3	Blythe/Blythe AP Regional Climate Summaries (4 Pages)
4.1B-4	SCAQMD Air Quality Data for Most Recent Years (2008-2010) (6 Pages)
4.1B-5	Proposed Building Dimensions and Height Data

In addition, this appendix contains the following Figures:

4.1B-1a-e	Proposed Facility Plot Plans
4.1B-2	Expanded View of Process Area
4.1B-3	BPIP Modeling Structure Map
4.1B-4	Coarse and Fine Receptor Grids
4.1B-5a-c	SCAB, SSAB, MDAB Monitoring Station Maps (3 Pages)
4.1B-6	Wind Roses (Quarterly and Annual)

Modeling input/output files are included in the enclosed CD's.

Table 4.1B-1

Air Quality Impact Summary for Normal Operating Conditions for Facility Impacts without Onsite Mobile Sources							
Pollutant	Avg. Period	Modeled Concentration ($\mu g/m^3$)	Background ($\mu g/m^3$)	Total ($\mu g/m^3$)	SIL ($\mu g/m^3$)	CAAQS/NAAQS	
						($\mu g/m^3$)	($\mu g/m^3$)
NO_2	1-hr CAAQS	95.9	124.3	220.2	-	339	-
	1-hr NAAQS	81.8	97.8	179.6	7.5	-	188
	Annual	0.37	22.6	22.97	1	57	100
PM_{10}	24-hr	0.26	144.8*	145.1	5	50	150
	Annual	0.02	32.7	32.7	1	20	-
$PM_{2.5}$	24- hr	0.26	15.7	16.0	1.2	-	35
	Annual	0.02	7.8	7.8	0.3	12	15.0
CO	1- hr	41.3	3543	3584	2000	23,000	40,000
	8- hr	2.9	2000	2003	500	10,000	10,000
SO_2	1- hr	1.21	28.6	29.8	7.8	655	196
	3- hr	0.50	28.6	29.1	25	-	1,300
	24- hr	0.14	13.1	13.2	5	105	-

Air Quality Impact Summary for Normal Operating Conditions for Facility Impacts with Onsite Mobile Sources							
Pollutant	Avg. Period	Modeled Concentration ($\mu g/m^3$)	Background ($\mu g/m^3$)	Total ($\mu g/m^3$)	SIL ($\mu g/m^3$)	CAAQS/NAAQS	
						($\mu g/m^3$)	($\mu g/m^3$)
NO_2	1-hr CAAQS	95.9	124.3	220.2	-	339	-
	1-hr NAAQS	82.0	97.8	179.8	7.5	-	188
	Annual	0.42	22.6	23.0	1	57	100
PM_{10}	24-hr	1.73	144.8*	146.5	5	50	150
	Annual	0.31	32.7	33.0	1	20	-
$PM_{2.5}$	24- hr	0.46	15.7	16.2	1.2	-	35
	Annual	0.07	7.8	7.9	0.3	12	15.0
CO	1- hr	47.5	3543	3590	2000	23,000	40,000
	8- hr	6.0	2000	2006	500	10,000	10,000
SO_2	1- hr	1.21	28.6	29.8	7.8	655	196
	3- hr	0.50	28.6	29.1	25	-	1,300
	24- hr	0.15	13.1	13.3	5	105	-

* First high modeled and maximum background was used.

TABLE 4.1B-2 (2 Pages)

Modeling Inputs/Results for PSEGS Site Prep Construction Impacts (Combustion Sources as Point Sources) - FASTALL/Fence+50m Recs/NAD27

Short Term Impacts (24 hrs and less)						Long Term Impacts (annual)					
	NOx	CO	SOx	PM10	PM2.5		NOx	CO	SOx	PM10	PM2.5
Combustion (lbs/day)	760.97	397.63	1.0025	37.726	37.726	Combustion (tons/year)	95.88	50.1	0.131	4.76	4.76
						Combustion (days/year)*	252	252	252	252	252
Combustion (hrs/day)	12	12	12	12	12	Combustion (hrs/day)	12	12	12	12	12
Combustion (lbs/hr)	63.41	33.14	0.08	3.14	3.14	Combustion (lbs/hr)*	43.78	22.88	0.06	2.17	2.17
Combustion (g/sec)	7.99E+00	4.18E+00	1.05E-02	3.96E-01	3.96E-01	Combustion (g/sec)	5.52E+00	2.88E+00	7.54E-03	2.74E-01	2.74E-01
Construction Dust (lbs/day)				18.03	3.10	Construction Dust (tons/year)				2.81	0.5
						Construction Dust (days/year)				252	252
Construction Dust (hrs/day)				12	12	Construction Dust (hrs/day)				12	12
Construction Dust (lbs/hr)				1.50	0.26	Construction Dust (lbs/hr)*				1.283	0.228
Construction Dust (g/sec)	33.9 acres			1.89E-01	3.26E-02	Construction Dust (g/sec)	3576 acres			1.62E-01	2.88E-02
AERMOD Inputs	**137,279 m^2**		**17 Pt.Srcs**				**14,470,756 m^2**		**50 Pt.Srcs**		
Combustion (g/s/src)	4.700E-01	2.456E-01	6.192E-04	2.330E-02	2.330E-02	Combustion (g/s/src)	1.103E-01	5.765E-02	1.507E-04	5.477E-03	5.477E-03
Construction Dust (g/s/m^2)				1.379E-06	2.371E-07	Construction Dust (g/s/m^2)				1.117E-08	1.988E-09
AERMOD Results (ug/m^3)											
Combustion Only						Combustion Only					
1-hour Max	250.706	131.001	0.330	12.42903							
3-hour Max			0.211	7.95518							
8-hour Max		52.196		4.95218							
24-hour Max			0.074	2.79625	2.79625	Annual	0.889			0.04414	0.04414
All Particulate Sources						All Particulate Sources					
24-hour Max				10.29124	3.36192	Annual				0.10366	0.05473
1-hour NO2 w/ ARM	200.564	based on ARM Ratio of:		80%		Annual NO2 w/ ARM	0.667	based on ARM Ratio of:		75%	
Background (ug/m^3)	124.3	CAAQS				Background (ug/m^3)					
1-hour Max	97.8	3543	28.6								
3-hour Max			28.6								
8-hour Max		2000									
24-hour Max			13.1	375.9	15.7	Annual	22.6			32.7	7.8
Total + Background (ug/m^3)	324.9	CAAQS				Total + Background (ug/m^3)					
1-hour Max	298.4	3674	28.93								
3-hour Max			28.81								
8-hour Max		2052									
24-hour Max			13.17	386.2	19.1	Annual	23.3			32.8	7.9

Maximum NOx/CO/SO2 impacts ratioed from PM10 combustion source impact.

*Even for construction projects taking less than 12-months or 7 days/wk, the hourly emissions for modeling are still based on total tons (projects<12 months) or tons/year (projects>12months) divided by 365 days since all days in the met dataset (i.e., all 12 months and all 365 days - i.e., 7 days/week) are modeled.

Modeling Inputs/Results for PSEGS Erection Construction Impacts (Combustion Sources as Point Sources) - FASTALL/Fence+50m Recs/NAD27

Short Term Impacts (24 hrs and less)						Long Term Impacts (annual)					
	NOx	CO	SOx	PM10	PM2.5		NOx	CO	SOx	PM10	PM2.5
Combustion (lbs/day)	760.97	397.63	1.0025	37.726	37.726	Combustion (tons/year)	95.88	50.1	0.131	4.76	4.76
						Combustion (days/year)*	252	252	252	252	252
Combustion (hrs/day)	12	12	12	12	12	Combustion (hrs/day)	12	12	12	12	12
Combustion (lbs/hr)	63.41	33.14	0.08	3.14	3.14	Combustion (lbs/hr)*	43.78	22.88	0.06	2.17	2.17
Combustion (g/sec)	7.99E+00	4.18E+00	1.05E-02	3.96E-01	3.96E-01	Combustion (g/sec)	5.52E+00	2.88E+00	7.54E-03	2.74E-01	2.74E-01
Construction Dust (lbs/day)				21.74	3.54	Construction Dust (tons/year)				2.81	0.5
						Construction Dust (days/year)				252	252
Construction Dust (hrs/day)				12	12	Construction Dust (hrs/day)				12	12
Construction Dust (lbs/hr)				1.81	0.30	Construction Dust (lbs/hr)*				1.283	0.228
Construction Dust (g/sec)	27.0 acres			2.28E-01	3.72E-02	Construction Dust (g/sec)	3576 acres			1.62E-01	2.88E-02
AERMOD Inputs	**109,276 m^2**		17	**Pt.Srcs**			**14,470,756 m^2**		50	**Pt.Srcs**	
Combustion (g/s/src)	4.700E-01	2.456E-01	6.192E-04	2.330E-02	2.330E-02	Combustion (g/s/src)	1.103E-01	5.765E-02	1.507E-04	5.477E-03	5.477E-03
Construction Dust (g/s/m^2)				2.089E-06	3.401E-07	Construction Dust (g/s/m^2)				1.117E-08	1.988E-09
AERMOD Results (ug/m^3)											
Combustion Only						Combustion Only					
1-hour Max	250.706	131.001	0.330	12.42903							
3-hour Max			0.211	7.95518							
8-hour Max		52.196		4.95218							
24-hour Max			0.074	2.79625	2.79625	Annual	0.889			0.04414	0.04414
All Particulate Sources						All Particulate Sources					
24-hour Max				15.32503	3.37948	Annual				0.10366	0.05473
5-yr Avg 8th High Daily 1-hr NO2 Max	200.564	based on ARM Ratio of:		80%		Annual NO2 w/ ARM	0.667	based on ARM Ratio of:		75%	
Background (ug/m^3)	124.3	CAAQS				Background (ug/m^3)					
1-hour Max	97.8	3543	28.6								
3-hour Max			28.6								
8-hour Max		2000									
24-hour Max			13.1	375.9	15.7	Annual	22.6			32.7	7.8
Total + Background (ug/m^3)	324.9	CAAQS				Total + Background (ug/m^3)					
1-hour Max	298.4	3674	28.93								
3-hour Max			28.81								
8-hour Max		2052									
24-hour Max			13.17	391.2	19.1	Annual	23.3			32.8	7.9

Maximum NOx/CO/SO2 impacts ratioed from PM10 combustion source impact.

*Even for construction projects taking less than 12-months or 7 days/wk, the hourly emissions for modeling are still based on total tons (projects<12 months) or tons/year (projects>12months) divided by 365 days since all days in the met dataset (i.e., all 12 months and all 365 days - i.e., 7 days/week) are modeled.

BLYTHE, CALIFORNIA (040924)

Table 4.1B-3 (4 Pages)

Period of Record Monthly Climate Summary

Period of Record : 1/ 1/1913 to 9/30/2012

	Jan	Feb	Mar	Apr	May	Jun	Jul	Aug	Sep	Oct	Nov	Dec	Annual
Average Max. Temperature (F)	67.6	73.0	79.4	87.4	95.5	104.2	108.4	106.8	101.8	90.5	76.7	67.7	88.3
Average Min. Temperature (F)	37.4	41.8	46.5	52.7	59.9	67.4	76.1	75.4	67.3	54.8	43.4	37.6	55.0
Average Total Precipitation (in.)	0.51	0.46	0.34	0.12	0.03	0.05	0.20	0.61	0.39	0.27	0.27	0.57	3.81
Average Total SnowFall (in.)	0.0	0.0	0.0	0.0	0.0	0.0	0.0	0.0	0.0	0.0	0.0	0.0	0.0
Average Snow Depth (in.)	0	0	0	0	0	0	0	0	0	0	0	0	0

Percent of possible observations for period of record.
Max. Temp.: 97.3% Min. Temp.: 97.2% Precipitation: 97.4% Snowfall: 72.5% Snow Depth: 72.4%
Check Station Metadata or Metadata graphics for more detail about data completeness.

Western Regional Climate Center, wrcc@dri.edu

BLYTHE, CALIFORNIA

NCDC 1981-2010 Monthly Normals

	Jan	Feb	Mar	Apr	May	Jun	Jul	Aug	Sep	Oct	Nov	Dec	Annual Monthly
Mean Max. Temperature (F)	67.9	73.0	80.1	88.1	97.2	105.4	108.9	107.6	102.1	90.0	76.5	66.3	88.6
Highest Mean Max. Temperature (F)													
Year Highest Occurred													
Lowest Mean Max. Temperature (F)													
Year Lowest Occurred													
Mean Temperature (F)	54.1	58.4	64.5	71.5	80.1	87.7	93.3	92.4	85.8	73.4	61.3	52.7	73.0
Highest Mean Temperature (F)													
Year Highest Occurred													
Lowest Mean Temperature (F)													
Year Lowest Occurred													
Mean Min. Temperature (F)	40.2	43.8	49.0	54.9	62.9	70.1	77.7	77.3	69.5	56.8	46.1	39.1	57.3
Highest Mean Min. Temperature (F)													
Year Highest Occurred													
Lowest Mean Min. Temperature (F)													
Year Lowest Occurred													
Mean Precipitation (in.)	0.56	0.58	0.40	0.09	0.04	0.00	0.22	0.42	0.45	0.20	0.23	0.58	3.77
Highest Precipitation (in.)													
Year Highest Occurred													
Lowest Precipitation (in.)													
Year Lowest Occurred													
Heating Degree Days (F)	340.	192.	78.	19.	1.	0.	0.	0.	0.	9.	144.	382.	1163.
Cooling Degree Days (F)	1.	7.	64.	214.	468.	682.	877.	851.	624.	269.	33.	0.	4089.

Western Regional Climate Center, wrcc@dri.edu

BLYTHE CAA AIRPORT, CALIFORNIA (040927)

Period of Record Monthly Climate Summary

Period of Record : 7/ 1/1948 to 9/30/2012

	Jan	Feb	Mar	Apr	May	Jun	Jul	Aug	Sep	Oct	Nov	Dec	Annual
Average Max. Temperature (F)	66.9	71.9	78.5	86.4	95.2	104.5	108.4	106.7	101.5	89.8	75.9	66.6	87.7
Average Min. Temperature (F)	41.7	45.4	50.2	56.5	64.5	72.7	81.1	80.3	73.1	60.8	48.6	41.3	59.7
Average Total Precipitation (in.)	0.48	0.44	0.35	0.15	0.02	0.02	0.28	0.60	0.34	0.26	0.19	0.41	3.55
Average Total SnowFall (in.)	0.0	0.0	0.0	0.0	0.0	0.0	0.0	0.0	0.0	0.0	0.0	0.0	0.0
Average Snow Depth (in.)	0	0	0	0	0	0	0	0	0	0	0	0	0

Percent of possible observations for period of record.
Max. Temp.: 98.4% Min. Temp.: 98.5% Precipitation: 98.5% Snowfall: 98.5% Snow Depth: 98.3%
Check Station Metadata or Metadata graphics for more detail about data completeness.

Western Regional Climate Center, wrcc@dri.edu

BLYTHE CAA AIRPORT, CALIFORNIA

NCDC 1981-2010 Monthly Normals

	Jan	Feb	Mar	Apr	May	Jun	Jul	Aug	Sep	Oct	Nov	Dec	Annual Monthly
Mean Max. Temperature (F)	67.7	72.0	78.7	86.6	95.8	104.6	108.2	106.8	101.1	89.0	75.9	66.0	87.8
Highest Mean Max. Temperature (F)													
Year Highest Occurred													
Lowest Mean Max. Temperature (F)													
Year Lowest Occurred													
Mean Temperature (F)	55.0	58.8	64.5	71.4	80.3	88.4	94.2	93.4	86.8	74.4	62.0	53.4	73.6
Highest Mean Temperature (F)													
Year Highest Occurred													
Lowest Mean Temperature (F)													
Year Lowest Occurred													
Mean Min. Temperature (F)	42.3	45.6	50.4	56.3	64.7	72.3	80.3	80.0	72.4	59.9	48.1	40.8	59.5
Highest Mean Min. Temperature (F)													
Year Highest Occurred													
Lowest Mean Min. Temperature (F)													
Year Lowest Occurred													
Mean Precipitation (in.)	0.49	0.59	0.50	0.09	0.03	0.01	0.27	0.53	0.41	0.17	0.25	0.49	3.83
Highest Precipitation (in.)													
Year Highest Occurred													
Lowest Precipitation (in.)													
Year Lowest Occurred													
Heating Degree Days (F)	311.	183.	84.	20.	1.	0.	0.	0.	0.	7.	132.	360.	1098.
Cooling Degree Days (F)	1.	10.	70.	213.	474.	703.	907.	880.	652.	300.	42.	1.	4253.

Western Regional Climate Center, wrcc@dri.edu

2008 AIR QUALITY
SOUTH COAST AIR QUALITY MANAGEMENT DISTRICT

Table 4/1B-4 (6 Pages)

2008

Source/Receptor Area		Station No.		Carbon Monoxide a)			Ozone										Nitrogen Dioxide d)			Sulfur Dioxide e)			
											No. Days Standard Exceeded												
											Health Advisory	Federal b)			State c)								
No.	Location	State Code	District Code	No. Days of Data	Max. Conc. in ppm 1-hour	Max Conc. in ppm 8-hour	No. Days of Data	Max. Conc. in ppm 1-hour	Max. Conc. in ppm 8-hour	Fourth High Conc. ppm 8-hour	≥ 0.150 ppm 1-hour	Old > 0.12 ppm 1-hour	Old > 0.08 ppm 8-hour	Current > 0.075 ppm 8-hour	Current > 0.09 ppm 1-hour	Current > 0.070 ppm 8-hour	No. Days of Data	Max Conc. in ppm 1-hour	Annual Average AAM Conc. ppm	No. Days of Data	Max. Conc. in ppm 1-hour	Max. Conc. in ppm 24-hour	Annual Average AAM Conc. ppm
LOS ANGELES COUNTY																							
1	Central LA	70087	087	366	3	2.1	356	0.109	0.090	0.073	0	0	1	3	3	7	343	0.12	0.0275	366	0.01	0.002	0.0003
2	Northwest Coastal LA County	70091	091	366	3	2.0	366	0.11	0.097	0.073	0	0	1	2	3	8	364	0.09	0.0184	--	--	--	--
3	Southwest Coastal LA County	70111	820	358	4	2.5	360	0.086	0.075	0.065	0	0	0	0	0	1	359	0.09	0.0143	357	0.02	0.005	0.0014
4	South Coastal LA County 1	70072	072	366	3	2.6	366	0.093	0.074	0.064	0	0	0	0	0	1	366	0.13	0.0208	366	0.09	0.012	0.0022
4	South Coastal LA County 2	70110	077	--	--	--	--	--	--	--	--	--	--	--	--	--	--	--	--	--	--	--	--
6	West San Fernando Valley	70074	074	366	4	2.9	366	0.123	0.103	0.095	0	0	14	25	23	40	366	0.09	0.0180	--	--	--	--
7	East San Fernando Valley	70069	069	366	3	2.6	366	0.133	0.109	0.092	0	1	8	17	20	35	364	0.11	0.0285	366	0.01	0.003	0.0008
8	West San Gabriel Valley	70088	088	366	3	2.1	366	0.122	0.100	0.091	0	0	6	16	16	26	365	0.11	0.0235	--	--	--	--
9	East San Gabriel Valley 1	70060	060	366	2	1.6	366	0.135	0.111	0.101	0	7	14	28	34	39	366	0.10	0.0230	--	--	--	--
9	East San Gabriel Valley 2	70591	591	366	3	3.0	366	0.156	0.118	0.112	2	12	25	45	48	61	366	0.10	0.0182	--	--	--	--
10	Pomona/Walnut Valley	70075	075	366	3	2.0	366	0.141	0.110	0.100	0	5	19	35	32	47	366	0.11	0.0302	--	--	--	--
11	South San Gabriel Valley	70185	085	357	3	2.1	366	0.107	0.093	0.077	0	0	1	5	7	13	341	0.10	0.0263	--	--	--	--
12	South Central LA County+	70084+	084+	310*	6*	4.3*	310*	0.078*	0.060*	0.055*	0*	0*	0*	0*	0*	0*	305*	0.12*	0.0301*	--	--	--	--
13	Santa Clarita Valley	70090	090	363	2	1.1	363	0.160	0.131	0.108	2	8	35	60	54	81	363	0.07	0.0165	--	--	--	--
ORANGE COUNTY																							
16	North Orange County	30177	3177	366	5	2.9	366	0.104	0.084	0.078	0	0	0	5	7	15	361	0.08	0.0206	--	--	--	--
17	Central Orange County	30178	3176	366	4	3.6	366	0.105	0.086	0.076	0	0	1	4	2	10	366	0.09	0.0203	--	--	--	--
18	North Coastal Orange County	30195	3195	366	3	2.0	366	0.094	0.079	0.075	0	0	0	3	0	6	365	0.08	0.0132	366	0.01	0.003	0.0011
19	Saddleback Valley	30002	3812	365	2	1.1	365	0.118	0.104	0.092	0	0	6	15	9	25	--	--	--	--	--	--	--
RIVERSIDE COUNTY																							
22	Norco/Corona	33155	4155	--	--	--	--	--	--	--	--	--	--	--	--	--	--	--	--	--	--	--	--
23	Metropolitan Riverside County 1	33144	4144	366	3	2.0	366	0.146	0.116	0.111	0	8	38	64	54	88	366	0.09	0.0192	366	0.01	0.003	0.0009
23	Metropolitan Riverside County 2	33146	4146	366	7	2.0	--	--	--	--	--	--	--	--	--	--	70*	0.09*	0.0258*	--	--	--	--
23	Mira Loma	33165	5214	366	3	1.9	366	0.135	0.107	0.104	0	4	23	47	38	62	366	0.10	0.0174	--	--	--	--
24	Perris Valley	33149	4149	--	--	--	366	0.142	0.114	0.106	0	4	41	77	65	94	--	--	--	--	--	--	--
25	Lake Elsinore	33158	4158	365	1	1.0	365	0.139	0.118	0.108	0	6	32	69	49	92	362	0.06	0.0129	--	--	--	--
29	Banning Airport	33164	4164	--	--	--	365	0.149	0.120	0.108	0	10	45	74	57	95	366	0.08	0.0128	--	--	--	--
30	Coachella Valley 1**	33137	4137	366	1	0.6	366	0.11	0.101	0.098	0	0	20	51	26	70	366	0.05	0.0093	--	--	--	--
30	Coachella Valley 2**	33157	4157	--	--	--	355	0.12	0.092	0.090	0	0	11	27	11	44	--	--	--	--	--	--	--
SAN BERNARDINO COUNTY																							
32	Northwest San Bernardino Valley	36175	5175	365	2	1.6	365	0.155	0.122	0.111	2	9	30	50	51	65	365	0.09	0.0235	--	--	--	--
33	Southwest San Bernardino Valley	36025	5817	--	--	--	--	--	--	--	--	--	--	--	--	--	--	--	--	--	--	--	--
34	Central San Bernardino Valley 1	36197	5197	363	2	1.9	364	0.162	0.124	0.111	1	8	35	58	55	82	364	0.10	0.0207	364	0.01	0.003	0.0018
34	Central San Bernardino Valley 2	36203	5203	366	2	1.8	366	0.157	0.122	0.113	2	11	43	62	62	90	366	0.09	0.0217	--	--	--	--
35	East San Bernardino Valley	36204	5204	--	--	--	366	0.154	0.120	0.112	1	12	50	75	72	100	--	--	--	--	--	--	--
37	Central San Bernardino Mountains	36181	5181	--	--	--	362	0.176	0.126	0.120	2	16	67	97	78	115	--	--	--	--	--	--	--
38	East San Bernardino Mountains	36001	5818	--	--	--	--	--	--	--	--	--	--	--	--	--	--	--	--	--	--	--	--
DISTRICT MAXIMUM				366	7	4.3	366	0.176	0.131	0.120	2	16	67	97	78	115		0.13	0.0302		0.09	0.012	0.0022
SOUTH COAST AIR BASIN					7	4.3		0.176	0.131	0.120	7	28	80	120	102	140		0.13	0.0302		0.09	0.012	0.0022

ppm - Parts Per Million parts of air, by volume. AAM = Annual Arithmetic Mean -- - Pollutant not monitored.

* Less than 12 full months of data; may not be representative. ** Salton Sea Air Basin.

\+ Site was relocated.

a) - The federal 8-hour standard (8-hour average CO > 9 ppm) and state 8-hour standard (8-hour average CO > 9.0 ppm) were not exceeded. The federal and state 1-hour standards (35 ppm and 20 ppm) were not exceeded, either.

b) - The federal 1-hour ozone standard was revoked and replaced by the 8-hour average ozone standard effective June 15, 2005. U.S. EPA has revised the federal 8-hour ozone standard from 0.084 ppm to 0.075 ppm, effective May 27, 2008.

c) - The 8-hour average California ozone standard of 0.070 ppm was established effective May 17, 2006.

d) - The federal standard is annual arithmetic mean NO_2 > 0.0534 ppm. California Air Resources Board has revised the NO_2 1-hour state standard from 0.25 ppm to 0.18 ppm and has established a new annual standard of 0.030 ppm, effective March 20, 2008.

e) - The state standards are 1-hour average SO_2 > 0.25 ppm and 24-hour average SO_2 > 0.04 ppm. The federal standards are annual arithmetic mean SO_2 > 0.03 ppm, 24-hour average > 0.14 ppm, and 3-hour average > 0.50 ppm. The federal and state SO_2 standards were not exceeded.

South Coast Air Quality Management District
21865 Copley Drive
Diamond Bar, CA 91765-4182
www.aqmd.gov

Maps showing the source/receptor area boundaries can be accessed via the Internet by entering your address in the AQMD Current Hourly Air Quality Map, accessed from http://www2.aqmd.gov/webappl/gisaqi2/VEMap3D.aspx or at http://www.aqmd.gov/map/MapAQMD2.pdf. A map is also available free of charge from the AQMD Public Information Center at 1-800-CUT-SMOG.

2008 AIR QUALITY
SOUTH COAST AIR QUALITY MANAGEMENT DISTRICT

2008

Source/Receptor Area No.	Location	Station No. State Code	Station No. District Code	Suspended Particulates PM10 f) No. Days of Data	Max. Conc. in µg/m³ 24-hour	No. (%) Samples Exceeding Standards: Federal > 150 µg/m³ 24-hour	State > 50 µg/m³ 24-hour	Annual Average Conc. i) (AAM) µg/m³	Fine Particulates PM2.5 g) No. Days of Data	Max. Conc. in µg/m³ 24-hour	98th Percentile Conc. in µg/m³	No. (%) Samples Exceeding Federal Standard: Current > 35 j) µg/m³ 24-hour	Old > 65 j) µg/m³ 24-hour	Annual Average Conc. k) (AAM) µg/m³	Particulates TSP h) No. Days of Data	Max. Conc. in µg/m³ 24-hour	Annual Average Conc. (AAM) µg/m³	Lead h) Max. Monthly Average Conc. l) µg/m³	Max. Quarterly Average Conc. l) µg/m³	Sulfate h) Max. Conc. in µg/m³ 24-hour	%Samples Exceeding State Standard ≥ 25 µg/m³ 24-hour
LOS ANGELES COUNTY																					
1	Central LA	70087	087	45*	66*	0*	2(4%)*	30.9*	337	78.3	40.4	10(3.0)	1(0.3)	15.7	63	112	65.6	0.02	0.02	14.4	0
2	Northwest Coastal LA County	70091	091	--	--	--	--	--	--	--	--	--	--	--	56	88	45.9	--	--	11.1	0
3	Southwest Coastal LA County	70111	820	60	50	0	0(0%)	25.6	--	--	--	--	--	--	54	85	42.4	0.01	0.01	14.0	0
4	South Coastal LA County 1	70072	072	57	62	0	1(2%)	29.1	346	57.2	38.9	8(2.3)	0	14.2	61	117	55.7	0.01	0.01	11.0	0
4	South Coastal LA County 2	70110	077	58	81	0	9(16%)	35.8	349	60.9	36.4	7(2.0)	0	13.7	59	130	61.2	0.01	0.01	13.2	0
6	West San Fernando Valley	70074	074	--	--	--	--	--	113	50.5	26.2	2(1.8)	0	11.9	--	--	--	--	--	--	--
7	East San Fernando Valley	70069	069	54	66	0	7(13%)	35.6	116	57.5	34.6	2(1.7)	0	14.1	--	--	--	--	--	--	--
8	West San Gabriel Valley	70088	088	--	--	--	--	--	118	66.0	32.1	2(1.7)	1(0.9)	12.9	55	108	46.7	--	--	14.1	0
9	East San Gabriel Valley 1	70060	060	49	98	0	13(27%)	35.3	321	53.1	34.8	5(1.6)	0	14.1	59	146	74.9	--	--	18.7	0
9	East San Gabriel Valley 2	70591	591	--	--	--	--	--	--	--	--	--	--	--	--	--	--	--	--	--	--
10	Pomona/Walnut Valley	70075	075	--	--	--	--	--	--	--	--	--	--	--	--	--	--	--	--	--	--
11	South San Gabriel Valley	70185	085	--	--	--	--	--	114.	47.3	38.0	4(3.5)	0	15.0	57	119	63.2	0.02	0.02	10.1	0
12	South Central LA County+	70084+	084+	--	--	--	--	--	118	44.2	36.5	3(2.5)	0	15.5	51	103	70.4	0.03	0.02	10.6	0
13	Santa Clarita Valley	70090	090	57	91	0	2(4%)	25.8	--	--	--	--	--	--	--	--	--	--	--	--	--
ORANGE COUNTY																					
16	North Orange County	30177	3177	--	--	--	--	--	--	--	--	--	--	--	--	--	--	--	--	--	--
17	Central Orange County	30178	3176	58	61	0	3(5%)	28.6	336	67.9	39.4	13(3.9)	1(0.3)	13.7	--	--	--	--	--	--	--
18	North Coastal Orange County	30195	3195	--	--	--	--	--	--	--	--	--	--	--	--	--	--	--	--	--	--
19	Saddleback Valley	30002	3812	55	42	0	0(0%)	22.6	120	32.6	27.1	0	0	10.4	--	--	--	--	--	--	--
RIVERSIDE COUNTY																					
22	Norco/Corona	33155	4155	61	86	0	9(15%)	34.4	--	--	--	--	--	--	--	--	--	--	--	--	--
23	Metropolitan Riverside County 1	33144	4144	120	115	0	49(41%)	46.6	348	57.7	41.5	14(4.0)	0	16.4	59	222	100.6	0.01	0.01	9.1	0
23	Metropolitan Riverside County 2	33146	4146	--	--	--	--	--	116	43.0	39.1	4(3.4)	0	13.4	63	130	69.4	0.01	0.01	7.1	0
23	Mira Loma	33165	5214	61	135	0	35(57%)	57.4	111	50.9	47.1	10(9.0)	0	18.2	--	--	--	--	--	--	--
24	Perris Valley	33149	4149	45*	85*	0*	12(27%)*	38.3*	--	--	--	--	--	--	--	--	--	--	--	--	--
25	Lake Elsinore	33158	4158	--	--	--	--	--	--	--	--	--	--	--	--	--	--	--	--	--	--
29	Banning Airport	33164	4164	56	51	0	1(2%)	26.1	--	--	--	--	--	--	--	--	--	--	--	--	--
30	Coachella Valley 1**	33137	4137	47*	75*	0*	4(9%)*	23.2*	110	18.1	17.1	0	0	7.2	--	--	--	--	--	--	--
30	Coachella Valley 2**	33157	4157	112	128	0	25(22%)	39.9	113	21.6	18.8	0	0	8.4	--	--	--	--	--	--	--
SAN BERNARDINO COUNTY																					
32	Northwest San Bernardino Valley	36175	5175	--	--	--	--	--	--	--	--	--	--	--	54	87	52.2	0.01	0.01	8.4	0
33	Southwest San Bernardino Valley	36025	5817	62	90	0	15(24%)	38.8	113	54.2	45.0	6(5.3)	0	15.8	--	--	--	--	--	--	--
34	Central San Bernardino Valley 1	36197	5197	60	75	0	14(23%)	40.3	112	49.0	47.1	6(5.4)	0	15.4	57	139	80	--	--	9.5	0
34	Central San Bernardino Valley 2	36203	5203	60	76	0	19(32%)	42.7	110	43.5	40.1	3(2.7)	0	13.5	59	166	83.6	0.02	0.02	8.6	0
35	East San Bernardino Valley	36204	5204	61	58	0	4(7%)	29.0	--	--	--	--	--	--	--	--	--	--	--	--	--
37	Central San Bernardino Mountains	36181	5181	39*	41*	0*	0(0%)*	23.9*	--	--	--	--	--	--	--	--	--	--	--	--	--
38	East San Bernardino Mountains	36001	5818	--	--	--	--	--	58	36.8	33.3	1(1.7)	0	9.2							
DISTRICT MAXIMUM					135	0	49	57.4		78.3	47.1	14	1	18.2		222	100.6	0.03	0.02	18.7	0
SOUTH COAST AIR BASIN					135	0	68	57.4		78.3	47.1	28	2	18.2		222	100.6	0.03	0.02	18.7	0

µg/m³ - Micrograms per cubic meter of air. AAM = Annual Arithmetic Mean -- - Pollutant not monitored.

* Less than 12 full months of data; may not be representative. ** Salton Sea Air Basin.

\+ Site was relocated.

f) - PM10 samples were collected every 6 days at all sites except for Station Numbers 4144 and 4157 where samples were collected every 3 days.

g) - PM2.5 samples were collected every 3 days at all sites except for the following sites: Station Numbers 060, 072, 077, 087, 3176, and 4144 where samples were taken every day, and Station Number 5818 where samples were taken every 6 days.

h) - Total suspended particulates, lead, and sulfate were determined from samples collected every 6 days by the high volume sampler method, on glass fiber filter media.

i) - Federal annual PM10 standard (AAM > 50 µg/m³) was revoked effective December 17, 2006. State standard is annual average (AAM) > 20 µg/m³.

j) - U.S. EPA has revised the federal 24-hour PM2.5 standard from 65 µg/m³ to 35 µg/m³; effective December 17, 2006.

k) - Federal PM2.5 standard is annual average (AAM) > 15 µg/m³. State standard is annual average (AAM) > 12 µg/m³.

l) - Federal lead standard is quarterly average > 1.5 µg/m³; and state standard is monthly average ≥ 1.5 µg/m³. U.S. EPA has established the federal standard of 0.15 ug/m3, rolling 3-month average, as of October 15, 2008.

Printed on Recycled Paper

Maps showing the source/receptor area boundaries can be accessed via the Internet by entering your address in the AQMD Current Hourly Air Quality Map, accessed from http://www2.aqmd.gov/webappl/gisaqi2/VEMap3D.aspx or at http://www.aqmd.gov/map/MapAQMD2.pdf. A map is also available free of charge from the AQMD Public Information Center at 1-800-CUT-SMOG.

2009 AIR QUALITY
SOUTH COAST AIR QUALITY MANAGEMENT DISTRICT

2009

Source/Receptor Area No.	Location	Station No.	Carbon Monoxide[a] No. Days of Data	Carbon Monoxide Max. Conc. in ppm 1-hour	Carbon Monoxide Max Conc. in ppm 8-hour	Ozone No. Days of Data	Ozone Max. Conc. in ppm 1-hour	Ozone Max. Conc. in ppm 8-hour	Ozone Fourth High Conc. ppm 8-hour	Ozone Health Advisory ≥ 0.15 ppm 1-hour	Ozone No. Days Standard Exceeded Federal[b] Old > 0.12 ppm 1-hour	Ozone No. Days Standard Exceeded Federal[b] Current > 0.075 ppm 8-hour	Ozone No. Days Standard Exceeded State[c] Current > 0.09 ppm 1-hour	Ozone No. Days Standard Exceeded State[c] Current > 0.070 ppm 8-hour	Nitrogen Dioxide[d] No. Days of Data	Nitrogen Dioxide Max Conc. in ppm 1-hour	Nitrogen Dioxide 98th Percentile Conc. ppm 1-hour	Nitrogen Dioxide Annual Average AAM Conc. ppm	Sulfur Dioxide[e] No. Days of Data	Sulfur Dioxide Max. Conc. in ppm 1-hour	Sulfur Dioxide Max. Conc. in ppm 24-hour
LOS ANGELES COUNTY																					
1	Central LA	087	357	3	2.2	365	0.139	0.100	0.073	0	1	2	3	5	365	0.12	0.07	0.0281	365	0.01	0.002
2	Northwest Coastal LA County	091	365	2	1.5	365	0.131	0.094	0.075	0	1	3	6	5	355	0.08	0.06	0.0170	--	--	--
3	Southwest Coastal LA County	820	349	2	1.9	352	0.077	0.070	0.061	0	0	0	0	0	362	0.08	0.07	0.0159	362	0.02	0.006
4	South Coastal LA County 1	072	362	3	2.2	363	0.089	0.068	0.064	0	0	0	0	0	362	0.11	0.07	0.0212	361	0.02	0.005
4	South Coastal LA County 2	077	--	--	--	--	--	--	--	--	--	--	--	--	--	--	--	--	--	--	--
6	West San Fernando Valley	074	365	4	2.8	365	0.135	0.100	0.093	0	1	19	15	31	365	0.07	0.06	0.0171	--	--	--
7	East San Fernando Valley	069	365	3	2.9	365	0.145	0.096	0.086	1	1	14	16	28	353	0.09	0.07	0.0274	362	0.01	0.003
8	West San Gabriel Valley	088	365	4	2.1	365	0.176	0.114	0.095	1	3	12	12	19	365	0.08	0.06	0.0221	--	--	--
9	East San Gabriel Valley 1	060	357	3	1.7	365	0.150	0.107	0.091	1	4	17	23	32	365	0.10	0.07	0.0194	--	--	--
9	East San Gabriel Valley 2	591	351	3	2.1	352	0.150	0.118	0.108	3	7	42	45	64	350	0.09	0.06	0.0170	--	--	--
10	Pomona/Walnut Valley	075	365	3	1.8	365	0.138	0.099	0.095	0	1	23	25	37	365	0.10	0.08	0.0274	--	--	--
11	South San Gabriel Valley	085	365	3	2.1	365	0.131	0.101	0.072	0	1	3	8	6	361	0.10	0.07	0.0259	--	--	--
12	South Central LA County	112+	354	7	4.6	354	0.104	0.086	0.064	0	0	1	2	1	354	0.09	0.07	0.0214	--	--	--
13	Santa Clarita Valley	090	361	2	1.4	357	0.140	0.122	0.103	0	5	64	57	77	357	0.06	0.05	0.0151	--	--	--
ORANGE COUNTY																					
16	North Orange County	3177	365	4	2.3	365	0.115	0.082	0.075	0	0	3	4	9	365	0.10	0.06	0.0206	--	--	--
17	Central Orange County	3176	365	3	2.7	365	0.093	0.077	0.068	0	0	1	0	2	365	0.07	0.06	0.0179	--	--	--
18	North Coastal Orange County	3195	362	3	2.2	365	0.087	0.075	0.066	0	0	0	0	3	365	0.07	0.06	0.0130	364	0.01	0.004
19	Saddleback Valley	3812	362	2	1.0	362	0.121	0.095	0.084	0	0	10	7	14	--	--	--	--	--	--	--
RIVERSIDE COUNTY																					
22	Norco/Corona	4155	--	--	--	--	--	--	--	--	--	--	--	--	--	--	--	--	--	--	--
23	Metropolitan Riverside County 1	4144	364	2	1.9	346	0.116	0.100	0.089	0	0	35	25	57	357	0.08	0.06	0.0171	364	0.01	0.003
23	Metropolitan Riverside County 2	4146	365	3	1.8	--	--	--	--	--	--	--	--	--	365	0.08	0.06	0.0200	--	--	--
23	Mira Loma	4165	364	3	2.4	364	0.118	0.090	0.086	0	0	22	15	37	364	0.08	0.05	0.0158	--	--	--
24	Perris Valley	4149	--	--	--	354	0.125	0.108	0.101	0	1	67	53	88	--	--	--	--	--	--	--
25	Lake Elsinore	4158	365	1	0.7	365	0.128	0.105	0.096	0	1	37	24	65	365	0.06	0.04	0.0129	--	--	--
29	Banning Airport	4164	--	--	--	359	0.133	0.104	0.100	0	1	70	55	93	359	0.06	0.05	0.0109	--	--	--
30	Coachella Valley 1**	4137	365	2	0.7	365	0.120	0.098	0.096	0	0	53	28	73	349	0.05	0.04	0.0081	--	--	--
30	Coachella Valley 2**	4157	--	--	--	365	0.097	0.090	0.085	0	0	24	6	41	--	--	--	--	--	--	--
SAN BERNARDINO COUNTY																					
32	Northwest San Bernardino Valley	5175	365	2	1.5	365	0.146	0.121	0.102	1	3	49	51	71	363	0.11	0.07	0.0239	--	--	--
33	Southwest San Bernardino Valley	5817	--	--	--	--	--	--	--	--	--	--	--	--	--	--	--	--	--	--	--
34	Central San Bernardino Valley 1	5197	365	2	1.5	365	0.142	0.128	0.100	0	3	48	45	65	365	0.11	0.07	0.0235	365	0.01	0.002
34	Central San Bernardino Valley 2	5203	363	3	1.9	363	0.150	0.126	0.101	1	2	62	53	79	363	0.08	0.06	0.0196	--	--	--
35	East San Bernardino Valley	5204	--	--	--	365	0.145	0.122	0.100	1	1	73	62	91	--	--	--	--	--	--	--
37	Central San Bernardino Mountains	5181	--	--	--	364	0.149	0.117	0.110	2	7	92	70	107	--	--	--	--	--	--	--
38	East San Bernardino Mountains	5818	--	--	--	--	--	--	--	--	--	--	--	--	--	--	--	--	--	--	--
DISTRICT MAXIMUM				7	4.6		0.176	0.128	0.110	3	7	92	70	107		0.12	0.08	0.0281		0.02	0.006
SOUTH COAST AIR BASIN				7	4.6		0.176	0.128	0.110	6	15	113	102	133		0.12	0.08	0.0281		0.02	0.006

ppm - Parts Per Million parts of air, by volume. AAM = Annual Arithmetic Mean -- - Pollutant not monitored.

** Salton Sea Air Basin.

+ Site was relocated.

a) - The federal 8-hour standard (8-hour average CO > 9 ppm) and state 8-hour standard (8-hour average CO > 9.0 ppm) were not exceeded. The federal and state 1-hour standards (35 ppm and 20 ppm) were not exceeded, either.

b) - The federal 1-hour ozone standard was revoked and replaced by the 8-hour average ozone standard effective June 15, 2005. U.S. EPA has revised the federal 8-hour ozone standard from 0.084 ppm to 0.075 ppm, effective May 27, 2008.

c) - The 8-hour average California ozone standard of 0.070 ppm was established effective May 17, 2006.

d) - The federal standard is annual arithmetic mean NO_2 > 0.0534 ppm. California Air Resources Board has revised the NO_2 1-hour state standard from 0.25 ppm to 0.18 ppm and has established a new annual standard of 0.030 ppm, effective March 20, 2008. U.S. EPA has established a new NO2 1-hour standard of 100 ppb (0.100 ppm), effective April 7, 2010.

e) - The state standards are 1-hour average SO_2 > 0.25 ppm and 24-hour average SO_2 > 0.04 ppm. U.S. EPA has revised the federal standard by establishing a new SO2 1-hour standard of 75 ppb (0.075 ppm) and revoking the existing annual (0.03 ppm) and 24-hour (0.14 ppm) SO2 standards, effective August 2, 2010. The federal and state SO_2 standards were not exceeded.

South Coast
Air Quality Management District
21865 Copley Drive
Diamond Bar, CA 91765-4182
www.aqmd.gov

2009 AIR QUALITY
SOUTH COAST AIR QUALITY MANAGEMENT DISTRICT

2009			Suspended Particulates PM10 f)					Fine Particulates PM2.5 g)					Particulates TSP			Lead		Sulfate	
					No. (%) Samples Exceeding Standards														
Source/Receptor Area No.	Location	Station No.	No. Days of Data	Max. Conc. in µg/m³ 24-hour	Federal > 150 µg/m³ 24-hour	State > 50 µg/m³ 24-hour	Annual Average Conc. h) (AAM) µg/m³	No. Days of Data	Max. Conc. in µg/m³ 24-hour	98th Percentile Conc. in µg/m³ 24-hour	No. (%) Samples Exceeding Federal Std > 35 µg/m³ 24-hour	Annual Average Conc. i) (AAM) µg/m³	No. Days of Data	Max. Conc. in µg/m³ 24-hour	Annual Average Conc. (AAM) µg/m³	Max. Monthly Average Conc. j) µg/m³	Max. Quarterly Average Conc. j) µg/m³	Max. Conc. in µg/m³ 24-hour	No. Days Exceeding State Std ≥ 25 µg/m³ 24-hour
LOS ANGELES COUNTY																			
1	Central LA	087	60	72	0	4(6.7)	33.1	359	61.7	34.0	7(1.9)	14.3	61	148	66.8	0.02	0.01	9.8	0
2	Northwest Coastal LA County	091	--	--	--	--	--	--	--	--	--	--	59	99	50.8	--	--	9.1	0
3	Southwest Coastal LA County	820	60	52	0	1(1.7)	25.4	--	--	--	--	--	48	87	42.4	0.01	0.01	8.6	0
4	South Coastal LA County 1	072	57	62	0	3(5.3)	30.5	328	63.0	34.2	6(1.8)	13.0	60	128	55.4	0.01	0.01	13.6	0
4	South Coastal LA County 2	077	56	83	0	5(8.9)	33.2	350	55.8	30.5	4(1.1)	12.5	59	159	65.2	0.01	0.01	12.1	0
6	West San Fernando Valley	074	--	--	--	--	--	110	39.9	27.2	1(0.9)	11.4	--	--	--	--	--	--	--
7	East San Fernando Valley	069	60	80	0	11(18.3)	39.2	243	67.5	34.4	4(1.6)	14.4	--	--	--	--	--	--	--
8	West San Gabriel Valley	088	--	--	--	--	--	109	52.0	35.7	3(2.8)	12.3	59	153	48.5	--	--	8.8	0
9	East San Gabriel Valley 1	060	52	74	0	7(13.5)	32.0	153	72.1	42.9	6(3.9)	12.8	58	208	74.9	--	--	7.9	0
9	East San Gabriel Valley 2	591	--	--	--	--	--	--	--	--	--	--	--	--	--	--	--	--	--
10	Pomona/Walnut Valley	075	--	--	--	--	--	--	--	--	--	--	--	--	--	--	--	--	--
11	South San Gabriel Valley	085	--	--	--	--	--	118	71.1	35.4	2(1.7)	14.8	59	194	69.7	0.04	0.02	9.9	0
12	South Central LA County+	112+	--	--	--	--	--	114	69.2	37.7	3(2.6)	14.7	57	118	59.6	0.03	0.02	9.9	0
13	Santa Clarita Valley	090	53	56	0	1(1.9)	23.4	--	--	--	--	--	--	--	--	--	--	--	--
ORANGE COUNTY																			
16	North Orange County	3177	--	--	--	--	--	--	--	--	--	--	--	--	--	--	--	--	--
17	Central Orange County	3176	56	63	0	1(1.8)	30.9	334	64.6	32.1	4(1.2)	11.8	--	--	--	--	--	--	--
18	North Coastal Orange County	3195	--	--	--	--	--	--	--	--	--	--	--	--	--	--	--	--	--
19	Saddleback Valley	3812	60	56	0	1(1.7)	23.5	116	39.2	23.8	1(0.9)	9.5	--	--	--	--	--	--	--
RIVERSIDE COUNTY																			
22	Norco/Corona	4155	59	79	0	7(11.9)	35.6	--	--	--	--	--	--	--	--	--	--	--	--
23	Metropolitan Riverside County 1	4144	119	77	0	35(29.4)	42.5	347	54.5	39.6	13(3.7)	15.3	60	161	87.6	0.01	0.01	7.3	0
23	Metropolitan Riverside County 2	4146	--	--	--	--	--	114	42.2	34.0	2(1.8)	13.4	61	162	66.0	0.01	0.01	6.8	0
23	Mira Loma	4165	59	108	0	33(55.9)	53.4	229	49.2	40.6	14(6.1)	16.9	--	--	--	--	--	--	--
24	Perris Valley	4149	58	80	0	9(15.5)	34.8	--	--	--	--	--	--	--	--	--	--	--	--
25	Lake Elsinore	4158	--	--	--	--	--	--	--	--	--	--	--	--	--	--	--	--	--
29	Banning Airport	4164	59	99	0	1(1.7)	25.9	--	--	--	--	--	--	--	--	--	--	--	--
30	Coachella Valley 1**	4137	54	140	0	1(1.9)	22.6	112	21.8	14.6	0	6.7	--	--	--	--	--	--	--
30	Coachella Valley 2**	4157	120	132	0	9(7.5)	32.5	112	27.5	17.0	0	7.9	--	--	--	--	--	--	--
SAN BERNARDINO COUNTY																			
32	Northwest San Bernardino Valley	5175	--	--	--	--	--	--	--	--	--	--	59	123	58.5	0.01	0.01	6.8	0
33	Southwest San Bernardino Valley	5817	62	70	0	9(14.5)	35.6	114	46.9	35.9	3(2.6)	14.7	--	--	--	--	--	--	--
34	Central San Bernardino Valley 1	5197	60	75	0	13(21.7)	40.2	118	46.4	32.7	2(1.7)	14.3	58	185	84.3	--	--	6.7	0
34	Central San Bernardino Valley 2	5203	52	66	0	11(21.2)	41.5	110	37.8	35.2	2(1.8)	13.0	61	125	74.3	0.01	0.01	7.1	0
35	East San Bernardino Valley	5204	60	52	0	2(3.3)	30.2	--	--	--	--	--	--	--	--	--	--	--	--
37	Central San Bernardino Mountains	5181	51	57	0	1(2.0)	24.5	--	--	--	--	--	--	--	--	--	--	--	--
38	East San Bernardino Mountains	5818	--	--	--	--	--	56	40.8	29.4	1(1.8)	9.9	--	--	--	--	--	--	--
	DISTRICT MAXIMUM			140	0	35	53.4		72.1	42.9	14	16.9		208	87.6	0.04	0.02	13.6	0
	SOUTH COAST AIR BASIN			108	0	60	53.4		72.1	42.9	27	16.9		208	87.6	0.04	0.02	13.6	0

µg/m³ - Micrograms per cubic meter of air. AAM = Annual Arithmetic Mean -- - Pollutant not monitored.

** Salton Sea Air Basin.

+ Site was relocated.

f) - PM10 samples were collected every 6 days at all sites except for Station Numbers 4144 and 4157 where samples were collected every 3 days.

g) - PM2.5 samples were collected every 3 days at all sites except for the following sites: Station Numbers 069, 072, 077, 087, 3176, 4144 and 4165 where samples were taken every day, and Station Number 5818 where samples were taken every 6 days.

h) - Federal annual PM10 standard (AAM > 50 µg/m³) was revoked effective December 17, 2006. State standard is annual average (AAM) > 20 µg/m³.

i) - Federal PM2.5 standard is annual average (AAM) > 15.0 µg/m³. State standard is annual average (AAM) > 12.0 µg/m³.

j) - Federal lead standards are rolling 3-month average > 0.15 µg/m3, and quarterly average > 1.5 µg/m³. State standard is monthly average ≥ 1.5 µg/m³.

Printed on Recycled Paper

Maps showing the source/receptor area boundaries can be accessed via the Internet by entering your address in the AQMD Current Hourly Air Quality Map, accessed from http://www2.aqmd.gov/webappl/gisaqi2/VEMap3D.aspx or at http://www.aqmd.gov/map/MapAQMD2.pdf . A map is also available free of charge from the AQMD Public Information Center at 1-800-CUT-SMOG.

2010 AIR QUALITY
SOUTH COAST AIR QUALITY MANAGEMENT DISTRICT

2010

Source/Receptor Area No.	Location	Station No.	Suspended Particulates PM10 d) No. Days of Data	Max. Conc. in µg/m³ 24-hour	No. (%) Samples Exceeding Standards Federal > 150 µg/m³ 24-hour	State > 50 µg/m³ 24-hour	Annual Average Conc. (AAM) µg/m³	Fine Particulates PM2.5 e) No. Days of Data	Max. Conc. in µg/m³ 24-hour	98th Percentile Conc. in µg/m³ 24-hour	No. (%) Samples Exceeding Fzederal Std > 35 µg/m³ 24-hour	Annual Average Conc. (AAM) µg/m³	Particulates TSP f) No. Days of Data c)	Max. Conc. in µg/m³ 24-hour	Annual Average Conc. (AAM) µg/m³	Lead f) Max. Monthly Average Conc. µg/m³	Max. Quarterly Average Conc. µg/m³	Sulfate f) Max. Conc. in µg/m³ 24-hour	No. Days Exceeding State Std ≥ 25 µg/m³ 24-hour
LOS ANGELES COUNTY																			
1	Central LA	087	56	42	0	0	27.1	335	39.2	27.1	2(0.6%)	11.9	53	105	53.3	0.02	0.01	9.1	0
2	Northwest Coastal LA County	091	--	--	--	--	--	--	--	--	--	--	59	82	40.8	--	--	7.5	0
3	Southwest Coastal LA County	820	55	37	0	0	20.6	--	--	--	--	--	55	85	36.7	0.01	0.01	9.7	0
4	South Coastal LA County 1	072	58	44	0	0	22.0	338	35.0	28.3	0	10.5	60	129	45.5	0.01	0.01	11.8	0
4	South Coastal LA County 2	077	59	76	0	2(3.4%)	27.3	351	33.7	26.5	0	10.4	57	130	50.8	0.01	0.01	12.2	0
6	West San Fernando Valley	074	--	--	--	--	--	100	40.7	30.4	1(1.0%)	10.2	--	--	--	--	--	--	--
7	East San Fernando Valley	069	55	51	0	1(1.8%)	29.6	322	43.7	31.8	4(1.2%)	12.5	--	--	--	--	--	--	--
8	West San Gabriel Valley	088	--	--	--	--	--	97	35.2	24.0	0	10.2	58	58	36.4	--	--	7.7	0
9	East San Gabriel Valley 1	060	55	70	0	5(9.1%)	29.8	93	44.4	35.4	1(1.1%)	10.9	53	136	58.2	--	--	6.4	0
9	East San Gabriel Valley 2	591	--	--	--	--	--	--	--	--	--	--	--	--	--	--	--	--	--
10	Pomona/Walnut Valley	075	--	--	--	--	--	--	--	--	--	--	--	--	--	--	--	--	--
11	South San Gabriel Valley	085	--	--	--	--	--	117	34.9	32.0	0	12.5	59	265	86.1	0.02	0.01	8.5	0
12	South Central LA County	112	--	--	--	--	--	111	38.2	31.8	1(0.9%)	12.5	58	94	49.2	0.01	0.01	7.8	0
13	Santa Clarita Valley	090	57	40	0	0	21.0	--	--	--	--	--	--	--	--	--	--	--	--
ORANGE COUNTY																			
16	North Orange County	3177	--	--	--	--	--	--	--	--	--	--	--	--	--	--	--	--	--
17	Central Orange County	3176	57	43	0	0	22.4	331	31.7	25.2	0	10.2	--	--	--	--	--	--	--
18	North Coastal Orange County	3195	--	--	--	--	--	--	--	--	--	--	--	--	--	--	--	--	--
19	Saddleback Valley	3812	58	34	0	0	18.1	116	19.9	17.3	0	8.0	--	--	--	--	--	--	--
RIVERSIDE COUNTY																			
22	Norco/Corona	4155	61	50	0	0	27.2	--	--	--	--	--	--	--	--	--	--	--	--
23	Metropolitan Riverside County 1	4144	122	75	0	7(5.7%)	32.8	351	46.5	32.0	4(1.1%)	13.2	60	131	64.3	0.01	0.01	6.7	0
23	Metropolitan Riverside County 2	4146	--	--	--	--	--	115	43.7	27.3	2(1.7%)	11.0	59	88	45.0	0.01	0.01	5.0	0
23	Mira Loma	4165	60	89	0	25(41.7%)	42.3	340	54.2	36.1	8(2.4%)	15.2	--	--	--	--	--	--	--
24	Perris Valley	4149	61	51	0	1(1.6%)	28.0	--	--	--	--	--	--	--	--	--	--	--	--
25	Lake Elsinore	4158	--	--	--	--	--	--	--	--	--	--	--	--	--	--	--	--	--
29	Banning Airport	4164	60	55	0	1(1.7%)	21.8	--	--	--	--	--	--	--	--	--	--	--	--
30	Coachella Valley 1**	4137	61	37	0	0	18.7	111	12.8	12.6	0	6.0	--	--	--	--	--	--	--
30	Coachella Valley 2**	4157	119	107	0	6(5%)	29.3	112	16.0	12.2	0	6.8	--	--	--	--	--	--	--
SAN BERNARDINO COUNTY																			
32	Northwest San Bernardino Valley	5175	--	--	--	--	--	--	--	--	--	--	59	86	46.7	0.01	0.01	10.1	0
33	Southwest San Bernardino Valley	5817	60	87	0	3(5%)	31.8	112	46.1	31.2	1(0.9%)	13.0	--	--	--	--	--	--	--
34	Central San Bernardino Valley 1	5197	53	62	0	9(17%)	33.9	112	42.6	30.8	2(1.8%)	12.0	61	142	73.3	--	--	6.3	0
34	Central San Bernardino Valley 2	5203	59	63	0	3(5.1%)	32.4	119	39.3	29.7	2(1.7%)	11.1	60	106	57.7	0.01	0.01	11.4	0
35	East San Bernardino Valley	5204	58	57	0	1(1.7%)	25.8	--	--	--	--	--	--	--	--	--	--	--	--
37	Central San Bernardino Mountains	5181	57	39	0	0	18.9	--	--	--	--	--	--	--	--	--	--	--	--
38	East San Bernardino Mountains	5818	--	--	--	--	--	53	35.4	27.5	0	8.4	--	--	--	--	--	--	--
	DISTRICT MAXIMUM			107	0	25	42.3		54.2	36.1	8	15.2		265	86.1	0.02	0.01	12.2	0
	SOUTH COAST AIR BASIN			89	0	34	42.3		54.2	36.1	13	15.2		265	86.1	0.02	0.01	12.2	0

** Salton Sea Air Basin µg/m³ - Micrograms per cubic meter of air AAM = Annual Arithmetic Mean -- - Pollutant not monitored

- In 2010, Particulate Matter concentrations met the Ambient Air Quality Standard levels for the federal PM10 Standard, the State and Federal Lead Standards, and the State Sulfate standard at the regular monitoring sites, listed above.

d) - PM10 samples were collected every 6 days at all sites except for Station Numbers 4144 and 4157, where samples were collected every 3 days. The Federal annual PM10 standard (AAM > 50 µg/m³) was revoked in 2006. State standard is annual average (AAM) > 20 µg/m³.

e) - PM2.5 samples were collected every 3 days at all sites except for station numbers 069, 072, 077, 087, 3176, 4144 and 4165, where samples were taken daily, and station number 5818 where samples were taken every 6 days. Federal annual PM2.5 standard is annual average (AAM) > 15.0 µg/m³. State standard is annual average (AAM) > 12.0 µg/m³.

f) - TSP Particulate, Lead and Sulfate samples were taken every 6 days at all sites monitored.

- Federal Equivalent Method (FEM) continuous monitoring instruments were operated at some of the above locations for PM10 and PM2.5 monitoring. The Federal Reference Method (FRM) data is used for the above statistics.

Printed on Recycled Paper

For information on the current standard levels and most recent revisions please refer to the previous year "Air Quality" summary card or access the "Ambient Air Quality Standards" chart at http://www.arb.ca.gov/research/aaqs/aaqs2.pdf.

Maps showing the source/receptor area boundaries can be accessed via the Internet by entering your address in the AQMD Current Hourly Air Quality Map, accessed from http://www2.aqmd.gov/webappl/gisaqi2/VEMap3D.aspx or at http://www.aqmd.gov/map/MapAQMD2.pdf. A map is also available free of charge from the AQMD Public Information Center at 1-800-CUT-SMOG.

2010 AIR QUALITY
SOUTH COAST AIR QUALITY MANAGEMENT DISTRICT

2010

Source/Receptor Area No.	Location	Station No.	Carbon Monoxide[a] No. Days of Data	Carbon Monoxide Max. Conc. in ppm 1-hour	Carbon Monoxide Max Conc. in ppm 8-hour	Ozone No. Days of Data	Ozone Max. Conc. in ppm 1-hour	Ozone Max. Conc. in ppm 8-hour	Ozone Fourth High Conc. ppm 8-hour	Ozone Health Advisory ≥ 0.15 ppm 1-hour	Ozone No. Days Standard Exceeded Federal Old > 0.12 ppm 1-hour	Ozone No. Days Standard Exceeded Federal Current > 0.075 ppm 8-hour	Ozone No. Days Standard Exceeded State Current > 0.09 ppm 1-hour	Ozone No. Days Standard Exceeded State Current > 0.070 ppm 8-hour	Nitrogen Dioxide[b] No. Days of Data	Nitrogen Dioxide Max Conc. in ppb 1-hour	Nitrogen Dioxide 98th Percentile Conc. ppb 1-hour	Nitrogen Dioxide Annual Average AAM Conc. ppb	Sulfur Dioxide[c] No. Days of Data	Sulfur Dioxide Max. Conc. in ppb 1-hour	Sulfur Dioxide Max. Conc. in ppb 24-hour
LOS ANGELES COUNTY																					
1	Central LA	087	364	3	2.3	357	0.098	0.080	0.064	0	0	1	1	1	364	89.0	70.5	25.0	355	9.8	1.5
2	Northwest Coastal LA County	091	364	2	1.4	360	0.099	0.078	0.069	0	0	1	2	4	365	70.8	57.4	15.6	--	--	--
3	Southwest Coastal LA County	820	344	3	2.2	319	0.089	0.070	0.059	0	0	0	0	1	358	75.8	60.9	12.1	327	25.9	3.5
4	South Coastal LA County 1	072	358	3	2.1	358	0.101	0.084	0.057	0	0	1	1	1	360	92.8	70.2	19.8	329	40.0	6.0
4	South Coastal LA County 2	077	--	--	--	--	--	--	--	--	--	--	--	--	--			--	--	--	--
6	West San Fernando Valley	074	365	3	2.6	295	0.122	0.091	0.086	0	0	19	11	40	365	75.0	56.0	16.7	--	--	--
7	East San Fernando Valley	069	364	3	2.4	317	0.111	0.084	0.076	0	0	4	3	11	359	82.0	64.3	24.1	233*	14.9	4.1
8	West San Gabriel Valley	088	355	3	2.0	325	0.101	0.081	0.075	0	0	3	1	6	355	71.0	63.0	19.6	--	--	--
9	East San Gabriel Valley 1	060	355	3	1.3	356	0.104	0.081	0.075	0	0	3	5	10	364	77.2	59.6	18.5	--	--	--
9	East San Gabriel Valley 2	591	360	2	1.3	350	0.124	0.099	0.090	0	0	20	25	48	360	78.5	55.5	15.4	--	--	--
10	Pomona/Walnut Valley	075	365	3	1.8	342	0.115	0.082	0.076	0	0	4	9	20	365	97.0	72.5	26.2	--	--	--
11	South San Gabriel Valley	085	364	2	1.9	358	0.112	0.086	0.059	0	0	1	1	1	364	79.0	65.4	22.9	--	--	--
12	South Central LA County	112	353	6	3.6	358	0.081	0.062	0.050	0	0	0	0	0	364	76.8	68.8	17.9	--	--	--
13	Santa Clarita Valley	090	355	2	1.1	331	0.126	0.105	0.087	0	1	23	18	44	364	59.3	54.2	14.3	--	--	--
ORANGE COUNTY																					
16	North Orange County	3177	356	3	1.8	351	0.118	0.096	0.071	0	0	1	2	4	333	82.5	61.6	20.1	--	--	--
17	Central Orange County	3176	358	3	2.0	331	0.104	0.088	0.060	0	0	1	1	1	364	73.3	61.1	17.5	--	--	--
18	North Coastal Orange County	3195	364	2	2.1	353	0.097	0.076	0.060	0	0	1	1	2	364	70.0	56.0	11.3	348	9.5	2.1
19	Saddleback Valley	3812	362	1	0.9	353	0.117	0.082	0.069	0	0	2	2	2	--			--	--	--	--
RIVERSIDE COUNTY																					
22	Norco/Corona	4155	--	--	--	--	--	--	--	--	--	--	--	--	--			--	--	--	--
23	Metropolitan Riverside County 1	4144	364	3	1.8	341	0.128	0.098	0.092	0	1	47	31	78	333	64.5	57.0	16.8	349	17.6	4.6
23	Metropolitan Riverside County 2	4146	355	3	1.7	--	--	--	--	--	--	--	--	--	361	60.8	51.5	17.2	--	--	--
23	Mira Loma	4165	360	3	1.9	324	0.121	0.094	0.090	0	0	38	22	63	365	62.2	50.3	15.1	--	--	--
24	Perris Valley	4149	--	--	--	343	0.122	0.107	0.099	0	0	50	42	82	--			--	--	--	--
25	Lake Elsinore	4158	363	1	0.6	355	0.107	0.091	0.086	0	0	24	15	42	363	51.2	40.6	10.1	--	--	--
29	Banning Airport	4164	--	--	--	328	0.124	0.107	0.099	0	0	60	31	84	365	65.7	53.2	11.6	--	--	--
30	Coachella Valley 1**	4137	365	2	0.5	361	0.114	0.099	0.092	0	0	52	23	83	365	45.7	39.0	8.5	--	--	--
30	Coachella Valley 2**	4157	--	--	--	348	0.100	0.087	0.084	0	0	19	7	47	--			--	--	--	--
SAN BERNARDINO COUNTY																					
32	Northwest San Bernardino Valley	5175	353	2	1.8	349	0.131	0.097	0.090	0	1	39	31	59	365	78.9	58.0	20.4	--	--	--
33	Southwest San Bernardino Valley	5817	--	--	--	--	--	--	--	--	--	--	--	--	--			--	--	--	--
34	Central San Bernardino Valley 1	5197	359	3	1.4	350	0.143	0.100	0.094	0	2	33	28	55	363	71.9	64.8	23.1	330*	6.6	1.6
34	Central San Bernardino Valley 2	5203	326	2	1.7	354	0.129	0.105	0.095	0	1	40	27	63	365	69.2	56.6	18.8	--	--	--
35	East San Bernardino Valley	5204	--	--	--	363	0.128	0.112	0.097	0	1	61	43	86	--			--	--	--	--
37	Central San Bernardino Mountains	5181	--	--	--	364	0.142	0.123	0.109	0	6	74	52	101	--			--	--	--	--
38	East San Bernardino Mountains	5818	--	--	--	--	--	--	--	--	--	--	--	--	--			--	--	--	--
DISTRICT MAXIMUM				6	3.6		0.143	0.123	0.109	0	6	74	52	101		97.0	72.5	26.2		40.0	6.0
SOUTH COAST AIR BASIN				6	3.6		0.143	0.123	0.109	0	7	102	79	131		97.0	72.5	26.2		40.0	6.0

ppm - Parts Per Million parts of air, by volume ppb – Parts Per Billion parts of air, by volume AAM = Annual Arithmetic Mean -- - Pollutant not monitored

** Salton Sea Air Basin

- In 2010, the State and Federal Ambient Air Quality Standards were met for the gaseous pollutants CO, NO2 and SO2 at all District regular monitoring sites, listed above.
  a) - The federal 8-hour standard is 8-hour average CO > 9 ppm and state 8-hour standard is 8-hour average CO > 9.0 ppm. The federal and state 1-hour standards are 35 ppm and 20 ppm.
  b) - The NO2 federal 1-hour standard is 100 ppb and the annual standard is annual arithmetic mean NO_2 > 0.0534 ppm. The state 1-hour and annual standards are 0.18 ppm and 0.030 ppm.
  c) - The federal SO2 1-hour standard is 75 ppb (0.075 ppm). The state standards are 1-hour average SO_2 > 0.25 ppm and 24-hour average SO_2 > 0.04 ppm.
- Revised/New Standards in 2010:
  -- U.S. EPA established the new NO2 1-hour federal standard of 100 ppb (0.100 ppm), effective April 7, 2010.
  -- U.S. EPA revised the SO2 federal standard by establishing the new 1-hour standard of 75 ppb (0.075 ppm) and revoking the existing annual (0.03 ppm) and 24-hour (0.14 ppm) standards, effective August 2, 2010.

South Coast Air Quality Management District
21865 Copley Drive
Diamond Bar, CA 91765-4182
www.aqmd.gov

Table 4.1B-5
Building and Structure Dimensions

CH2MHILL.

CLIENT	BRIGHTSOURCE INDUSTRIES ISRAEL
PROJECT	PALEN SOLAR ELECTRIC GENERATING SYSTEM (PSEGS)
DOCUMENT TITLE	BUILDING AND STRUCTURE DIMENSIONS
DOCUMENT NUMBER	459892- PSEGS -DOC-003

Rev. No.	Date	By	Checked	Approval	Pages	Nature of Revisions
0	5 Dec 2012	CSH				Initial Issue
1	21 Dec 2012	CSH				Resize Service/Firewater Tanks

Copyright © 2012 CH2M HILL

TABLE OF CONTENTS

SECTION **PAGE**

TABLES

1 Building and Structure Dimensions, Common Area 1

2 Building and Structure Dimensions, Power Block #1 2

3 Building and Structure Dimensions, Power Block #2 6

Attachments:

A Drawing C-1000, Revision D, Civil Overall Site Plan

B Drawing P-1000A, Revision 4, Equipment Arrangement Plan, 250 MW Plant Power Block #2

C Drawing P-1000B, Revision 4, Equipment Arrangement Plan, 250 MW Plant Power Block #1

D Drawing P-1001, Revision 3, Equipment Arrangement Plan, Common Area

Copyright © 2012 CH2M HILL

TABLE 1
Building and Structure Dimensions, Common Area

Description	Item Number[1]	Length N to S (feet)	Width E to W (feet)	Height (feet)	Building Area[2] (sq. feet)	Location[3] UTM Coordinates (m) (NAD 83) Grade Elevation (ft)	Remarks
Administration Building including Control Room	106, 108	80	180	34	14,400	N 3,728,336.443 m E 664,136.147 m EL 645. ft	Sloped Roof[4]
Mechanical/Maintenance Shop, Electrical/ Instrument Maintenance Shop, Vehicle Maintenance Shop and Warehouse Building	101, 102, 104, 109	90	120	48	10,800	N 3,728,336.950 m E 664,191.309 m EL 645. ft	Sloped Roof[4]
Firewater Storage Tank	113	52	N/A	36	N/A	N 3,728,396.807 m E 664,199.532 m EL 643. ft	Round[5], ~480,000 gal
Fire Water Pump House	114	12	36	10	432	N 3,728,391.360 m E 664,184.305 m EL 643. ft	
Emergency Diesel Generator Enclosure	112	12	18	10	216	N 3,728,394.589 m E 664,163.538 m EL 643. ft	250 kWe

Notes:
1 Reference Drawing P-1001, Attachment D
2 Building area provided for enclosed buildings only.
3 Location: Coordinates of southwest corner of rectangular objects and center of round objects.
4 Height for sloped roof is to peak.
5 For round structures the length is the structure's diameter.

Copyright © 2012 CH2M HILL

TABLE 2
Building and Structure Dimensions, Power Block #1

Description	Item Number[1]	Length N to S (feet)	Width E to W (feet)	Height (feet)	Building Area[2] (sq. feet)	Location[3] UTM Coordinates (m) (NAD 83) Grade Elevation (ft)	Remarks
Solar Tower including Solar Receiver Steam Generator	1, 11	75	N/A	750	N/A	N 3,730,027.350 m E 664,445.796 m EL 548. ft	Round[5]
Steam Turbine Generator Enclosure	2	34	46	52	1,564	N 3,730,022.149 m E 664,486.191 m EL 546. ft	Sloped Roof[4]
Air Cooled Condenser	3	220	300	120	N/A	N 3,729,935.559 m E 664,508.453 m EL 548. ft	Open Structure
Steam Turbine Enclosure	4	40	56	52	2,240	N 3,730,023.776 m E 664,503.080 m EL 545. ft	
Steam Turbine Generator Lube Oil Enclosure	15	22	38	18	836	N 3,730,034.145 m E 664,486.103 m EL 546. ft	
Deaerator/Feedwater Heater Structure	5, 25, 26	56	66	80	N/A	N 3,729,973.803 m E 664,443.137 m EL 549. ft	Open Structure
Emergency Diesel Generator Enclosure	12	12	32	12	384	N 3,730,018.444 m E 664,583.054 m EL 542. ft	2,500 kWe

Copyright © 2012 CH2M HILL

TABLE 2
Building and Structure Dimensions, Power Block #1

Description	Item Number[1]	Length N to S (feet)	Width E to W (feet)	Height (feet)	Building Area[2] (sq. feet)	Location[3] UTM Coordinates (m) (NAD 83) Grade Elevation (ft)	Remarks
Plant Service Building	13	56	100	16	5,600	N 3,730,048.461 m E 664,532.247 m EL 543. ft	Sloped Roof[4]
ACC Power Distribution Center – North	22	14	50	16	700	N 3,729,977.490 m E 664,559.371 m EL 544. ft	Under ACC (Item 3)
ACC Power Distribution Center – South	22	14	50	16	700	N 3,729,945.609 m E 664,559.606 m EL 546. ft	Under ACC (Item 3)
Fire Water Pump House	28	36	12	12	432	N 3,729,953.950 m E 664,382.454 m EL 552. ft	
Demineralized Water Storage Tank	31	26	N/A	26	N/A	N 3,729,964.043 m E 664,421.182 m EL 551. ft	Round[5], ~95,000 gal
Service/ Firewater Storage Tank	34	60	N/A	46	N/A	N 3,729,960.961 m E 664,398.835 m EL 551. ft	Round[5], ~800,000 gal
Mirror Wash Water Storage Tank	54	25	N/A	21	N/A	N 3,729,959.152 m E 664,465.022 m EL 549. ft	Round[5], ~70,000 gal

Copyright © 2012 CH2M HILL

TABLE 2
Building and Structure Dimensions, Power Block #1

Description	Item Number[1]	Length N to S (feet)	Width E to W (feet)	Height (feet)	Building Area[2] (sq. feet)	Location[3] UTM Coordinates (m) (NAD 83) Grade Elevation (ft)	Remarks
Boiler Pump Power Distribution Center	80	50	14	16	700	N 3,729,960.409 m E 664,476.769 m EL 548. ft	
Waste Water Storage Tank	42	25	N/A	23	N/A	N 3,729,936.747 m E 664,420.459 m EL 550. ft	Round[5], ~75,000 gal
Water Treatment Power Distribution Center	43	30	14	16	420	N 3,729,942.641 m E 664,418.727 m EL 551. ft	
Night Preservation Auxiliary Boiler	9	10	12	12	N/A	N 3,729,983.509 m E 664,424.848 m EL 550. ft	~ 10,000 lbs/hr, 10 MMBtu/hr
Start-up Auxiliary Boiler	8	14	56	16	N/A	N 3,729,976.244 m E 664,387.466 m EL 552. ft	~ 185,000 lbs/hr, 249 MMBtu/hr
Mirror Wash Vehicle Refueling and Storage Area Canopy	6	74	116	24	N/A	N 3,729,918.912 m E 664,454.038 m EL 550. ft	Open Structure, Flat Roof
Mirror Wash Vehicle Storage Area Canopy	44	40	184	20	N/A	N 3,729,908.891 m E 664,498.891 m EL 549. ft	Open Structure, Flat Roof

Copyright © 2012 CH2M HILL

TABLE 2
Building and Structure Dimensions, Power Block #1

Description	Item Number[1]	Length N to S (feet)	Width E to W (feet)	Height (feet)	Building Area[2] (sq. feet)	Location[3] UTM Coordinates (m) (NAD 83) Grade Elevation (ft)	Remarks
Wet Surface Air Cooler (WSAC)	36	48	36	26	N/A	N 3,729,911.417 m E 664,397.219 m EL 552. ft	
Thermal Evaporation Unit	72	34	18	64	N/A	N 3,729,920.876 m E 664,417.418 m EL 552. ft	Open Structure
Residue Tank	70	12	N/A	13	N/A	N 3,729,913.861 m E 664,417.583 m EL 552. ft	Round[5], ~ gal
Water Treatment Building	N/A	66	90	26	5940	N 3,729,928.347 m E 664,382.074 m EL 552. ft	Sloped Roof[4]
Generator Step-up Transformer	23	12	26	22	N/A	N 3,730,057.938 m E 664,504.480 m EL 545. ft	
Drains Tank	75	12	N/A	13	N/A	N 3,729,970.911 m E 664,467.001 m EL 552. ft	Round[5], ~ gal

Notes:
1 Reference Drawing P-1000B, Attachment C
2 Building area provided for enclosed buildings only.
3 Location: Coordinates of southwest corner of rectangular objects and center of round objects.
4 Height for sloped roof is to peak.
5 For round structures the length is the structure's diameter.

Copyright © 2012 CH2M HILL

TABLE 3
Building and Structure Dimensions, Power Block #2

Description	Item Number[1]	Length N to S (feet)	Width E to W (feet)	Height (feet)	Building Area[2] (sq. feet)	Location[3] UTM Coordinates (m) (NAD 83) Grade Elevation (ft)	Remarks
Solar Tower including Solar Receiver Steam Generator	1, 11	75	N/A	750	N/A	N 3,728,606.614 m E 666,555.824 m EL 538. ft	Round[5]
Steam Turbine Generator Enclosure	2	34	46	52	1,564	N 3,728,601.413 m E 666,596.219 m EL 536. ft	Sloped Roof[4]
Air Cooled Condenser	3	220	300	120	N/A	N 3,728,514.822 m E 666,618.481 m EL 537. ft	Open Structure
Steam Turbine Enclosure	4	40	56	52	2,240	N 3,728,603.040 m E 666,613.108 m EL 535. ft	
Steam Turbine Generator Lube Oil Enclosure	15	22	38	18	836	N 3,728,613.409 m E 666,596.131 m EL 536. ft	
Deaerator/Feedwater Heater Structure	5, 25, 26	56	66	80	N/A	N 3,728,553.066 m E 666,553.164 m EL 539. ft	Open Structure
Emergency Diesel Generator Enclosure	12	12	32	12	384	N 3,728,597.707 m E 666,693.083 m EL 532. ft	2,500 kWe

Copyright © 2012 CH2M HILL

TABLE 3
Building and Structure Dimensions, Power Block #2

Description	Item Number[1]	Length N to S (feet)	Width E to W (feet)	Height (feet)	Building Area[2] (sq. feet)	Location[3] UTM Coordinates (m) (NAD 83) Grade Elevation (ft)	Remarks
Plant Service Building	13	56	100	16	5,600	N 3,728,627.725 m E 666,642.276 m EL 533. ft	Sloped Roof[4]
ACC Power Distribution Center – North	22	14	50	16	700	N 3,728,556.752 m E 666,669.399 m EL 534. ft	Under ACC (Item 3)
ACC Power Distribution Center – East	22	14	50	16	700	N 3,728,524.871 m E 666,669.634 m EL 536. ft	Under ACC (Item 3)
Fire Water Pump House	28	36	12	12	432	N 3,728,533.213 m E 666,492.480 m EL 542. ft	
Demineralized Water Storage Tank	31	26	N/A	26	N/A	N 3,728,543.306 m E 666,531.209 m EL 541. ft	Round[5], ~95,000 gal
Service/ Firewater Storage Tank	34	60	N/A	46	N/A	N 3,728,540.224 m E 666,508.862 m EL 541. ft	Round[5], ~800,000 gal
Mirror Wash Water Storage Tank	54	25	N/A	21	N/A	N 3,728,538.415 m E 666,575.050 m EL 539. ft	Round[5], ~70,000 gal

Copyright © 2012 CH2M HILL

TABLE 3
Building and Structure Dimensions, Power Block #2

Description	Item Number[1]	Length N to S (feet)	Width E to W (feet)	Height (feet)	Building Area[2] (sq. feet)	Location[3] UTM Coordinates (m) (NAD 83) Grade Elevation (ft)	Remarks
Boiler Pump Power Distribution Center	80	50	14	16	700	N 3,728,539.672 m E 666,586.797 m EL 538. ft	
Waste Water Storage Tank	42	25	N/A	23	N/A	N 3,728,516.010 m E 666,530.486 m EL 540. ft	Round[5], ~75,000 gal
Water Treatment Power Distribution Center	43	30	14	16	420	N 3,728,521.904 m E 666,528.754 m EL 541. ft	
Night Preservation Auxiliary Boiler	9	10	12	12	N/A	N 3,728,562.772 m E 666,534.875 m EL 540. ft	~ 10,000 lbs/hr, 10 MMBtu/hr
Start-up Auxiliary Boiler	8	14	56	16	N/A	N 3,728,555.508 m E 666,497.493 m EL 542. ft	~ 185,000 lbs/hr, 249 MMBtu/hr
Mirror Wash Vehicle Refueling and Storage Area Canopy	6	74	116	24	N/A	N 3,728,498.175 m E 666,564.065 m EL 540. ft	Open Structure, Flat Roof
Mirror Wash Vehicle Storage Area Canopy	44	40	184	20	N/A	N 3,728,488.153 m E 666,608.918 m EL 539. ft	Open Structure, Flat Roof

Copyright © 2012 CH2M HILL

TABLE 3
Building and Structure Dimensions, Power Block #2

Description	Item Number[1]	Length N to S (feet)	Width E to W (feet)	Height (feet)	Building Area[2] (sq. feet)	Location[3] UTM Coordinates (m) (NAD 83) Grade Elevation (ft)	Remarks
Wet Surface Air Cooler (WSAC)	36	48	36	26	N/A	N 3,728,490.680 m E 666,507.246 m EL 542. ft	
Thermal Evaporation Unit	72	34	18	64	N/A	N 3,728,500.139 m E 666,527.445 m EL 542. ft	Open Structure
Residue Tank	70	12	N/A	13	N/A	N 3,728,493.124 m E 666,527.610 m EL 542. ft	Round[5], ~ gal
Water Treatment Building	N/A	66	90	26	5940	N 3,728,507.610 m E 666,492.100 m EL 542. ft	Sloped Roof[4]
Generator Step-up Transformer	23	12	26	22	N/A	N 3,728,637.201 m E 666,614.508 m EL 535. ft	
Drains Tank	75	12	N/A	13	N/A	N 3,728,550.174 m E 666,577.028 m EL 542. ft	Round[5], ~ gal

Notes:
1 Reference Drawing P-1000A, Attachment B
2 Building area provided for enclosed buildings only.
3 Location: Coordinates of southwest corner of rectangular objects and center of round objects.
4 Height for sloped roof is to peak.
5 For round structures the length is the structure's diameter.

Copyright © 2012 CH2M HILL

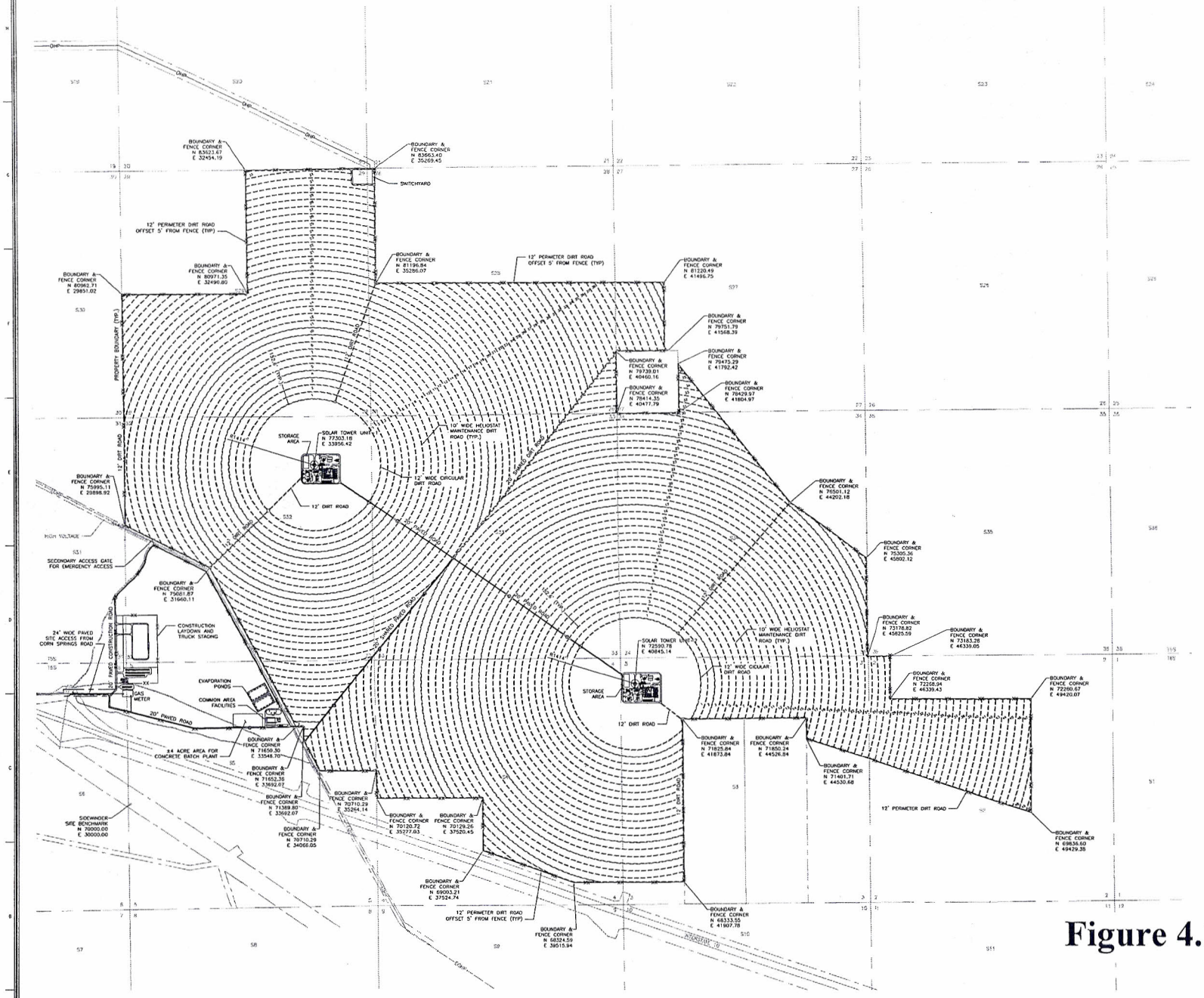

Figure 4.1B-1a

GENERAL NOTES:

1. FOR CIVIL PROJECT INFORMATION, ABBREVIATIONS AND LEGEND SEE SHEET C-0001.
2. ALL EXISTING SITE INFORMATION: TOPOGRAPHY, BUILDING LOCATIONS, ROADS & PAVEMENT LOCATIONS, SITE UTILITIES, AND PROPERTY LINE INFORMATION WERE OBTAINED FROM OWNER PROVIDED DOCUMENTS/DRAWINGS.
3. FOR CIVIL OVERALL GRADING AND DRAINAGE PLAN SEE SHEET C-2000.
4. ALL NECESSARY LICENSES SHALL BE OBTAINED PRIOR TO COMMENCEMENT OF WORK.
5. VERIFY ALL MEASUREMENTS AND DIMENSIONS PRIOR TO ORDERING ANY MATERIALS OR CONDUCTING ANY WORK.
6. ALL WORK SHALL BE PERFORMED IN A FINISHED AND WORKMAN LIKE MANNER AND CONSISTENT WITH THE BEST RECOGNIZED TRADE PRACTICES.
7. COORDINATES SHOWN ARE IN PALEN / PROJECT LOCAL GRID SYSTEM.
8. NO BOUNDARY SURVEY INFORMATION IS SHOWN OR IMPLIED ON THESE DRAWINGS.

*NOTE:

QUANTITIES SHOWN ARE FOR PRELIMINARY INTERNAL ESTIMATING AND NOT TO BE USED FOR BIDING PURPOSES. IT IS THE CONTRACTORS RESPONSIBILITY TO ESTABLISH THERE OWN QUANTITY TAKE-OFF'S FROM APPROVED PLANS.

*HARDSCAPE AREA DATA:

1. TOWER UNIT #1
   HEAVY DUTY ASPHALT PAVEMENT AREA: ±10,100 S.Y.
   LIGHT DUTY ASPHALT PAVEMENT AREA: ±900 S.Y.
   CONCRETE PAVEMENT AREA: ±2,850 S.Y.
   GRAVEL (INTERIOR ISLANDS) AREA: ±47,000 S.Y.
2. TOWER UNIT #2
   HEAVY DUTY ASPHALT PAVEMENT AREA: ±10,100 S.Y.
   LIGHT DUTY ASPHALT PAVEMENT AREA: ±900 S.Y.
   CONCRETE PAVEMENT AREA: ±2,850 S.Y.
   GRAVEL (INTERIOR ISLANDS) AREA: ±47,000 S.Y.
3. PAVED ROADS
   HEAVY DUTY ASPHALT PAVEMENT AREA: ±45,000 S.Y.
4. COMMON AREA
   HEAVY DUTY ASPHALT PAVEMENT AREA: ±8,900 S.Y.
   LIGHT DUTY ASPHALT PAVEMENT AREA: ±1,450 S.Y.
   CONCRETE PAVEMENT AREA: ±100 S.Y.
   GRAVEL (INTERIOR ISLANDS) AREA: ±5,300 S.Y.

*EARTHWORK QUANITITIES:

1. TOWER UNIT #1
   CUT: 9,260 CUBIC YARDS
   FILL: 45,589 CUBIC YARDS
   NET (FILL) 36,329 CUBIC YARDS
2. TOWER UNIT #2
   CUT: 3,169 CUBIC YARDS
   FILL: 95,925 CUBIC YARDS
   NET (FILL) 92,756 CUBIC YARDS
3. COMMON AREA-ADMIN/MAINTENANCE WAREHOUSE BLDG.
   CUT: 35,665 CUBIC YARDS
   FILL: 23,459 CUBIC YARDS
   NET (CUT) 12,206 CUBIC YARDS

DRAFT
800-227-2600
Call 2 Full Working Days in Advance

PRELIMINARY
NOT FOR CONSTRUCTION

NO	DATE	REVISION	BY	CK.	APPR.
D	13-DEC-2012	ISSUE FOR PERMIT	T.O.C.	D.E.M.	C.S.H.
C	04-DEC-2012	ADDED EARTHWORK QUANTITIES	T.O.C.	D.E.M.	C.S.H.
B	27-NOV-2012	REVISED PER MEETING ON 19-NOV-2012	T.O.C.	D.E.M.	C.S.H.
A	19-NOV-2012	ISSUE FOR REVIEW	T.O.C.	D.E.M.	C.S.H.

BrightSource

DESIGNED BY T.O.C
DRAWN BY D.E.M
APPR. BY C.S.H.
SLIDE APPR.

CH2MHILL
Atlanta, Georgia

SHEET TITLE: CIVIL OVERALL SITE PLAN

JOB NAME: PALEN SOLAR ELECTRIC GENERATION STATION

JOB NO. 459892
FILENAME C-1000.dwg
SCALE 1" = 750'
REV. NO. D
DWG. NO. C-1000

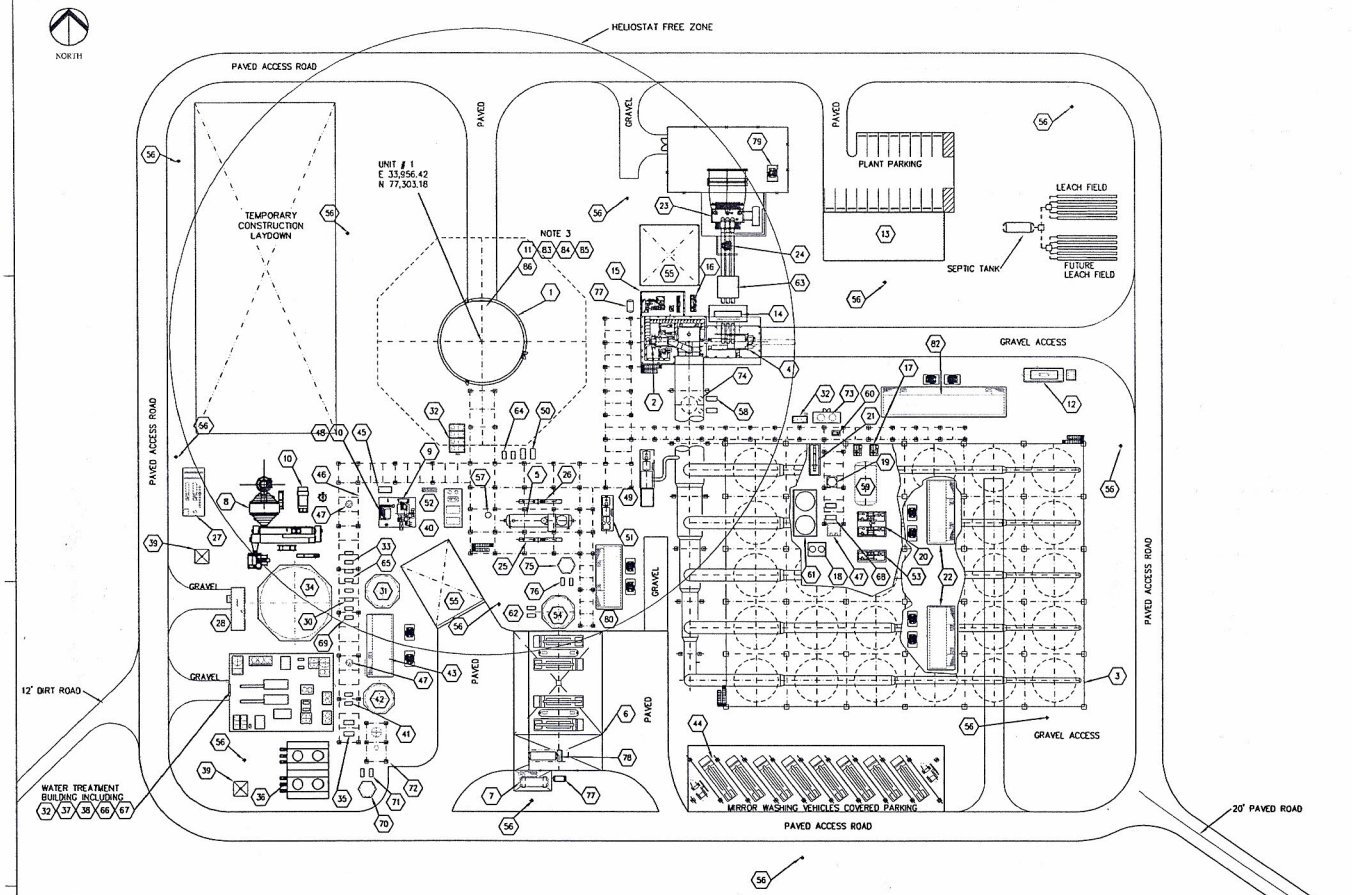

Figure 4.1B-1b

NOTES:

1. SOLAR POWER TOWER WILL INCLUDE STAIRS, ELEVATOR WITH THE SRSG ON THE TOP.
2. FEED WATER DEAERATOR WILL BE INSTALLED ON THE TOP PLATFORM OF 5 TOTAL. EACH PLATFORM WILL BE AT ± 20 FEET BETWEEN LEVELS.
3. ITEMS 11, & 83-86 TO BE PLACED ON ELEVATED PLATFORMS IN THE (SRSG) TOWER.

EQUIPMENT LEGEND

1	SOLAR POWER TOWER
2	STEAM TURBINE
3	AIR COOLED CONDENSER (ACC)
4	STEAM TURBINE GENERATOR
5	FEED WATER DEAERATOR
6	WASH VEHICLE FILLING / FUELING STATION & PARKING
7	6000 GAL. DIESEL FUEL STORAGE TANK
8	START-UP AUXILARY BOILER
9	NIGHT PRESERVATION AUXILARY BOILER (NPAB)
10	START-UP BOILER & PUMP SKID
11	SOLAR RECEIVER STEAM GENERATOR (SRSG)
12	EMERGENCY DIESEL GENERATOR
13	PLANT SERVICES BUILDING
14	STEAM TURBINE EXCITATION CONTAINER
15	STEAM TURBINE OIL SYSTEMS
16	STEAM TURBINE GLAND STEAM CONDENSER
17	CONDENSATE PUMPS (2 REQ'D)
18	CONDENSATE POLISHER PREFILTER SKID
19	CONDENSATE FILTER AIR RECEIVER
20	ACC VACUUM SKID (NORMAL OPERATION)
21	ACC AIR EJECTOR SKID
22	ACC POWER DISTRIBUTION CENTER TRANSFORMERS
23	GSU STEP-UP TRANSFORMER
24	UNIT AUXILRY TRANSFORMER
25	LP FEED WATER HEATERS (4 REQ'D)
26	HP FEED WATER HEATERS (3 REQ'D)
27	FUEL GAS FILTER/METERING STATION
28	FIRE WATER PUMP HOUSE W/1 DIESEL, 1 ELEC. & 1 JOCKEY PUMP
29	NOT USED
30	DEMIN. WATER TRANSFER PUMPS (2 REQ'D)
31	DEMIN. WATER STORAGE TANK
32	CHEMICAL FEED STATION
33	SERVICE WATER DISTRIBUTION PUMPS (2 REQ'D)
34	SERVICE / FIRE WATER STORAGE TANK
35	CLOSED COOLING WATER (CCW) PUMPS (2 REQ'D)
36	CCW WET SURFACE AIR COOLER (WSAC)
37	POTABLE WATER PUMPS (2 REQ'D)
38	POTABLE WATER GENERATION SKID
39	GROUND WATER WELLS W/PUMPS (2 REQ'D)
40	DUEL AIR COMPRESSOR SKID
41	WASTE WATER PUMPS (2 REQ'D)
42	WASTE WATER STORAGE TANK
43	WATER SYSTEMS POWER DISTRIBUTION CENTER AND TRANSFORMERS
44	MIRROR WASH TRUCKS
45	SAMPLE PANEL
46	NOT USED
47	WASTE WATER SUMP W/ 2 PUMPS (3 REQ'D)
48	NP AUXILARY BOILER DEAERATOR / PUMP SKID
49	TURBINE DRIVE BOILER FEED WATER PUMP
50	START-UP AUXILARY BOILER FEED PUMPS (2 REQ'D)
51	ELECTRIC BOILER FEED WATER PUMP
52	BULK STORAGE NITROGEN BOTTLES
53	ACC VACUUM SKID (NIGHT OPERATION)
54	WASH WATER STORAGE TANK
55	CONSTRUCTION AND MAINTENANCE CRANE PAD
56	FIRE HYDRANT W/HOSE (10)
57	CCW EXPANSION TANK
58	ACC DRAIN PUMPS (2 REQ'D)
59	CONDENSATE TANK
60	ACC WASHING SKID
61	POLISHING SKID
62	WASH WATER PUMPS (2 REQ'D)
63	GENERATOR CIRCUIT BREAKER
64	CLOSED COOLING WATER BOOSTER PUMPS (2 REQ'D)
65	RAW WATER FORWARDING PUMPS (2 REQ'D)
66	SERVICE WATER BAG FILTERS
67	DEMINERALIZED WATER CARTRIDGE FILTERS
68	POLISHER SLUICE PUMPS (2 REQ'D)
69	WSAC MAKE-UP WATER PUMPS (2 REQ'D)
70	RESIQUE TANK
71	RESIQUE TANK PUMPS (2 REQ'D)
72	THERMAL EVAPORATION UNIT
73	SPENT AND CLEAN RESIN STORAGE TANKS
74	CONDENSATE FILTERS (2 REQ'D)
75	DRAINS TANK
76	DRAINS TANK PUMPS (2 REQ'D)
77	OIL WATER SEPARATOR
78	DIESEL FUEL TRUCK REFUELING
79	STATION SERVICE TRANSFORMER
80	BOILER PUMP POWER DISTRIBUTION CENTER AND TRANSFORMER
81	FIN FAN COOLER
82	MAIN PLANT POWER DISTRIBUTION CENTER
83	SRSG CIRCULATING PUMPS (4 REQ'D)
84	SRSG CIRCULATING PUMPS COOLING EXPANSION TANK
85	SRSG FLASH TANK
86	SRSG BLOWDOWN TANK

50 0 50 100
Scale: 1 INCH = 50 FEET

NO.	DATE	REVISION	BY	CHK
0		ISSUED FOR REVIEW	WAN	
1	11/13/12	INCORPORATED CLIENT COMMENTS	WAN	
2	11/20/12	INCORPORATE 11/19/12 MEETING COMMENTS	JBA	
3	12/5/2012	ISSUED FOR PERMITTING	MTC	
4	12/21/2012	REVISED FOR FW/SW TANK SIZE	JBA	

REVISION APPROVAL		REV DATE	
DISCIPLINE	REVIEWED	DISCIPLINE	REVIEWED
CIVIL		ELECTRICAL	
STRUCTURAL		INST & CNTRL	
MECHANICAL		ARCHITECTURAL	
PROCESS		PLANT LAYOUTS	
PIPING			

STATUS					
ISSUED	REV	DATE	DM	SDE	PEM
PRELIMINARY					
FOR REVIEW AND APPROVAL					
APPROVED FOR CONSTRUCTION					
REVISED & APPROVED FOR CONSTRUCTION					

RESPONSIBLE ENGINEER

PE #

SCALE 1"=50'-0"

BrightSource
BRIGHTSOURCE INDUSTRIES ISRAEL
PROJECT NO. 459892

CH2MHILL

EQUIPMENT ARRANGEMENT PLAN
250MW POWER BLOCK #1

DWG. NO. P-1000B

REV. 4

BAR IS ONE INCH ON ORIGINAL DRAWING.
0 1"

REUSE OF DOCUMENTS: THIS DOCUMENT, AND THE IDEAS AND DESIGNS INCORPORATED HEREIN, AS AN INSTRUMENT OF PROFESSIONAL SERVICE, IS THE PROPERTY OF CH2M HILL AND IS NOT TO BE USED, IN WHOLE OR IN PART, FOR ANY OTHER PROJECT WITHOUT THE WRITTEN AUTHORIZATION OF CH2MHILL. ©

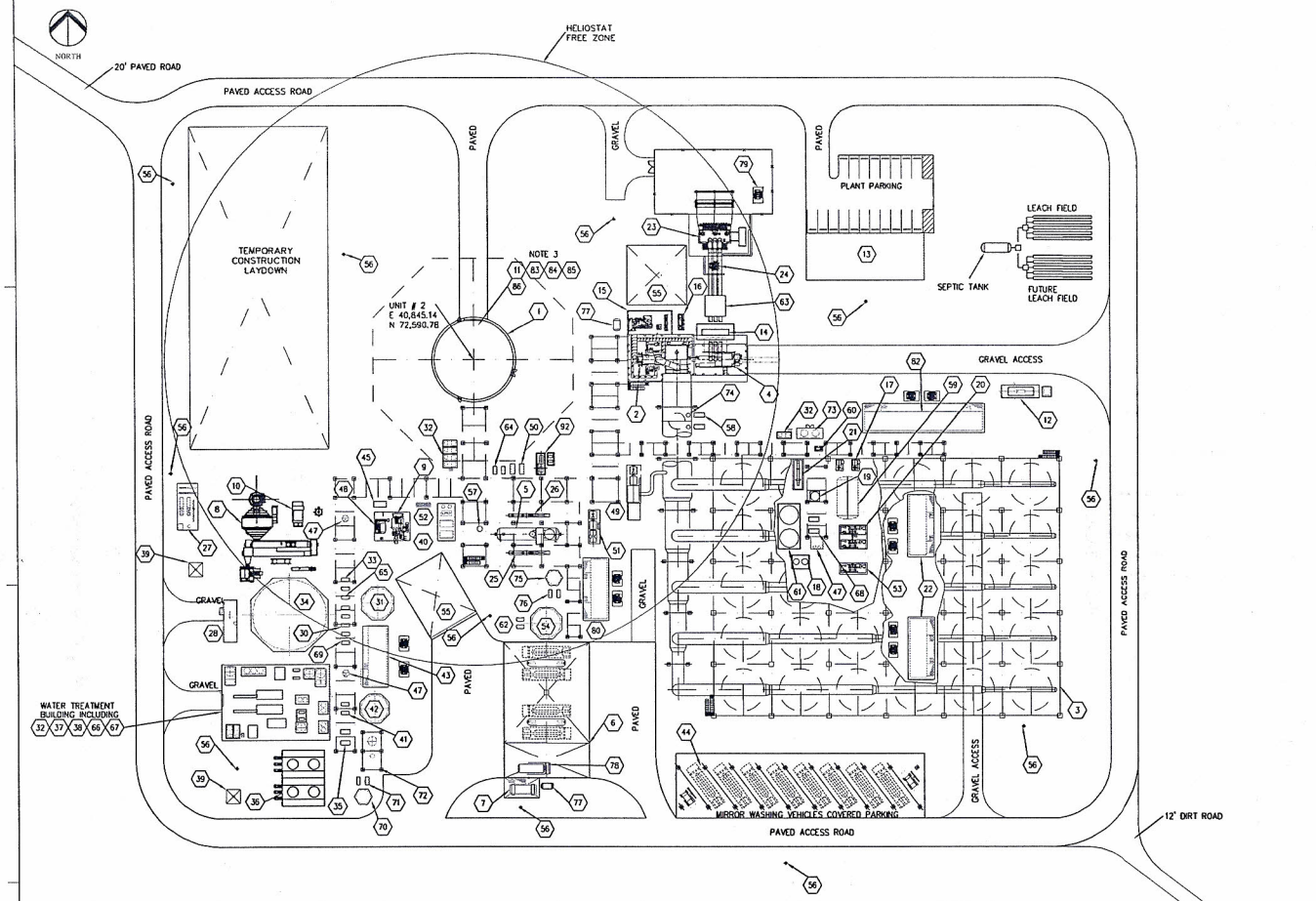

SOLAR TOWER #2 GRADE ELEV. 538'-0"

Figure 4.1B-1c

NOTES:

1. SOLAR POWER TOWER WILL INCLUDE STAIRS, ELEVATOR WITH THE SRSG ON THE TOP.
2. FEED WATER DEAERATOR WILL BE INSTALLED ON THE TOP PLATFORM OF 5 TOTAL. EACH PLATFORM WILL BE AT ± 20 FEET BETWEEN LEVELS.
3. ITEMS 11, & 83-86 TO BE PLACED ON ELEVATED PLATFORMS IN THE (SRSG) TOWER.

EQUIPMENT LEGEND

1	SOLAR POWER TOWER	46	NOT USED
2	STEAM TURBINE	47	WASTE WATER SUMP W/ 2 PUMPS (3 REQ'D)
3	AIR COOLED CONDENSER (ACC)	48	NP AUXILARY BOILER DEAERATOR / PUMP SKID
4	STEAM TURBINE GENERATOR	49	TURBINE DRIVE BOILER FEED WATER PUMP
5	FEED WATER DEAERATOR	50	START-UP AUXILARY BOILER FEED PUMPS (2 REQ'D)
6	WASH VEHICLE FILLING / FUELING STATION & PARKING	51	ELECTRIC BOILER FEED WATER PUMP
7	8000 GAL. DIESEL FUEL STORAGE TANK	52	BULK STORAGE NITROGEN BOTTLES
8	START-UP AUXILARY BOILER	53	ACC VACUUM SKID (NIGHT OPERATION)
9	NIGHT PRESERVATION AUXILARY BOILER (NPAB)	54	WASH WATER STORAGE TANK
10	START-UP DEAERATOR & PUMP SKID	55	CONSTRUCTION AND MAINTENANCE CRANE PAD
11	SOLAR RECEIVER STEAM GENERATOR (SRSG)	56	FIRE HYDRANT W/HOSE (10)
12	EMERGENCY DIESEL GENERATOR	57	CCW EXPANSION TANK
13	PLANT SERVICES BUILDING	58	ACC DRAIN PUMPS (2 REQ'D)
14	STEAM TURBINE EXCITATION CONTAINER	59	CONDENSATE TANK
15	STEAM TURBINE OIL SYSTEMS	60	ACC WASHING SKID
16	STEAM TURBINE GLAND STEAM CONDENSER	61	POLISHING SKID
17	CONDENSATE PUMPS (2 REQ'D)	62	WASH WATER PUMPS (2 REQ'D)
18	CONDENSATE POLISHER PREFILTER SKID	63	GENERATOR CIRCUIT BREAKER
19	CONDENSATE FILTER AIR RECEIVER	64	CLOSED COOLING WATER BOOSTER PUMPS (2 REQ'D)
20	ACC VACUUM SKID (NORMAL OPERATION)	65	RAW WATER FORWARDING PUMPS (2 REQ'D)
21	ACC AIR EJECTOR SKID	66	SERVICE WATER BAG FILTERS
22	ACC POWER DISTRIBUTION CENTER TRANSFORMERS	67	DEMINERALIZED WATER CARTRIDGE FILTERS
23	GSU STEP-UP TRANSFORMER	68	POLISHER SLUICE PUMPS (2 REQ'D)
24	UNIT AUXILRY TRANSFORMER	69	WSAC MAKE-UP WATER PUMPS (2 REQ'D)
25	LP FEED WATER HEATERS (4 REQ'D)	70	RESIDUE TANK
26	HP FEED WATER HEATERS (3 REQ'D)	71	RESIDUE TANK PUMPS (2 REQ'D)
27	FUEL GAS FILTER/METERING STATION	72	THERMAL EVAPORATION UNIT
28	FIRE WATER PUMP HOUSE W/1 DIESEL, 1 ELEC. & 1 JOCKEY PUMP	73	SPENT AND CLEAN RESIN STORAGE TANKS
29	NOT USED	74	CONDENSATE FILTERS (2 REQ'D)
30	DEMIN. WATER TRANSFER PUMPS (2 REQ'D)	75	DRAINS TANK
31	DEMIN. WATER STORAGE TANK	76	DRAINS TANK PUMPS (2 REQ'D)
32	CHEMICAL FEED STATION	77	OIL WATER SEPARATOR
33	SERVICE WATER DISTRIBUTION PUMPS (2 REQ'D)	78	DIESEL FUEL TRUCK REFUELING
34	SERVICE / FIRE WATER STORAGE TANK	79	STATION SERVICE TRANSFORMER
35	CLOSED COOLING WATER (CCW) PUMPS (2 REQ'D)	80	BOILER PUMP POWER DISTRIBUTION CENTER AND TRANSFORMER
36	CCW WET SURFACE AIR COOLER (WSAC)	81	FIN FAN COOLER
37	POTABLE WATER PUMPS (2 REQ'D)	82	MAIN PLANT POWER DISTRIBUTION CENTER
38	POTABLE WATER GENERATION SKID	83	SRSG CIRCULATING PUMPS (4 REQ'D)
39	GROUND WATER WELLS W/PUMPS (2 REQ'D)	84	SRSG CIRCULATING PUMPS COOLING EXPANSION TANK
40	DUEL AIR COMPRESSOR SKID	85	SRSG FLASH TANK
41	WASTE WATER PUMPS (2 REQ'D)	86	SRSG BLOWDOWN TANK
42	WASTE WATER STORAGE TANK		
43	WATER SYSTEMS POWER DISTRIBUTION CENTER AND TRANSFORMERS		
44	MIRROR WASH TRUCKS		
45	SAMPLE PANEL		

50 0 50 100
Scale: 1 INCH = 50 FEET

NO.	DATE	REVISION	BY	CHK
0		ISSUED FOR REVIEW	WAN	
1	11/13/12	INCORPORATED CLIENT COMMENTS	WAN	
2	11/20/12	INCORPORATE 11/15/12 MEETING COMMENTS	JBA	
3	12/5/2012	ISSUED FOR PERMITTING	MTC	
4	12/21/2012	REVISED FOR FW/SW TANK SIZE	JBA	

REVISION APPROVAL		REV DATE	
DISCIPLINE	REVIEWED	DISCIPLINE	REVIEWED
CIVIL		ELECTRICAL	
STRUCTURAL		INST & CNTRL	
MECHANICAL		ARCHITECTURAL	
PROCESS		PLANT LAYOUTS	
PIPING			

STATUS					
ISSUED	REV	DATE	DM	SDE	PEM
PRELIMINARY	2/5/2012				
FOR REVIEW AND APPROVAL					
APPROVED FOR CONSTRUCTION					
REVISED & APPROVED FOR CONSTRUCTION					

RESPONSIBLE ENGINEER

PE #

SCALE 1"=50'-0"

BrightSource
BRIGHTSOURCE INDUSTRIES ISRAEL
ENERGY SOLAR
ELECTRIC GENERATING SYSTEM

PROJECT NO. 459892

CH2MHILL

EQUIPMENT ARRANGEMENT PLAN
250MW POWER BLOCK #2

DWG. NO. P-1000A

REV. 4

BAR IS ONE INCH ON ORIGINAL DRAWING.
0 1"

REUSE OF DOCUMENTS: THIS DOCUMENT, AND THE IDEAS AND DESIGNS INCORPORATED HEREIN, AS AN INSTRUMENT OF PROFESSIONAL SERVICE, IS THE PROPERTY OF CH2M HILL AND IS NOT TO BE USED, IN WHOLE OR IN PART, FOR ANY OTHER PROJECT WITHOUT THE WRITTEN AUTHORIZATION OF CH2MHILL. ©

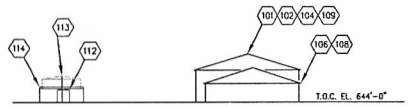

COMMONS AREA LOOKING EAST

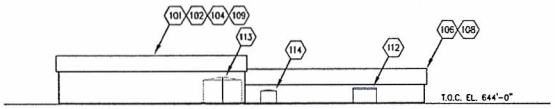

COMMONS AREA LOOKING SOUTH

EQUIPMENT LEGEND CONTINUED FROM DWG. P-1000

- 100 BATTERY CHARGING STATION
- 101 MECHANICAL MAINTENANCE SHOP
- 102 ELECTRICAL / INSTRUMENT MAINTENANCE SHOP
- 103 BULK CHEMICAL STORAGE
- 104 VEHICLE MAINTENANCE SHOP
- 105 GROUND WATER WELLS
- 106 CONTROL ROOM
- 107 PARKING
- 108 ADMINISTRATION
- 109 WAREHOUSE
- 110 POTABLE WATER GENERATION
- 111 AIR COMPRESSOR SKID
- 112 EMERGENCY DIESEL GENERATOR
- 113 FIRE / SERVICE WATER STORAGE TANK
- 114 FIRE WATER PUMP HOUSE
- 115 SPARE WASH TRUCKS
- 116 DIESEL FUEL TRUCK PARKING
- 117 FIRE HYDRANT WITH HOSE (4)
- 118 EVAPORATION POND (2)
- 119 WASTE WATER TRUCK

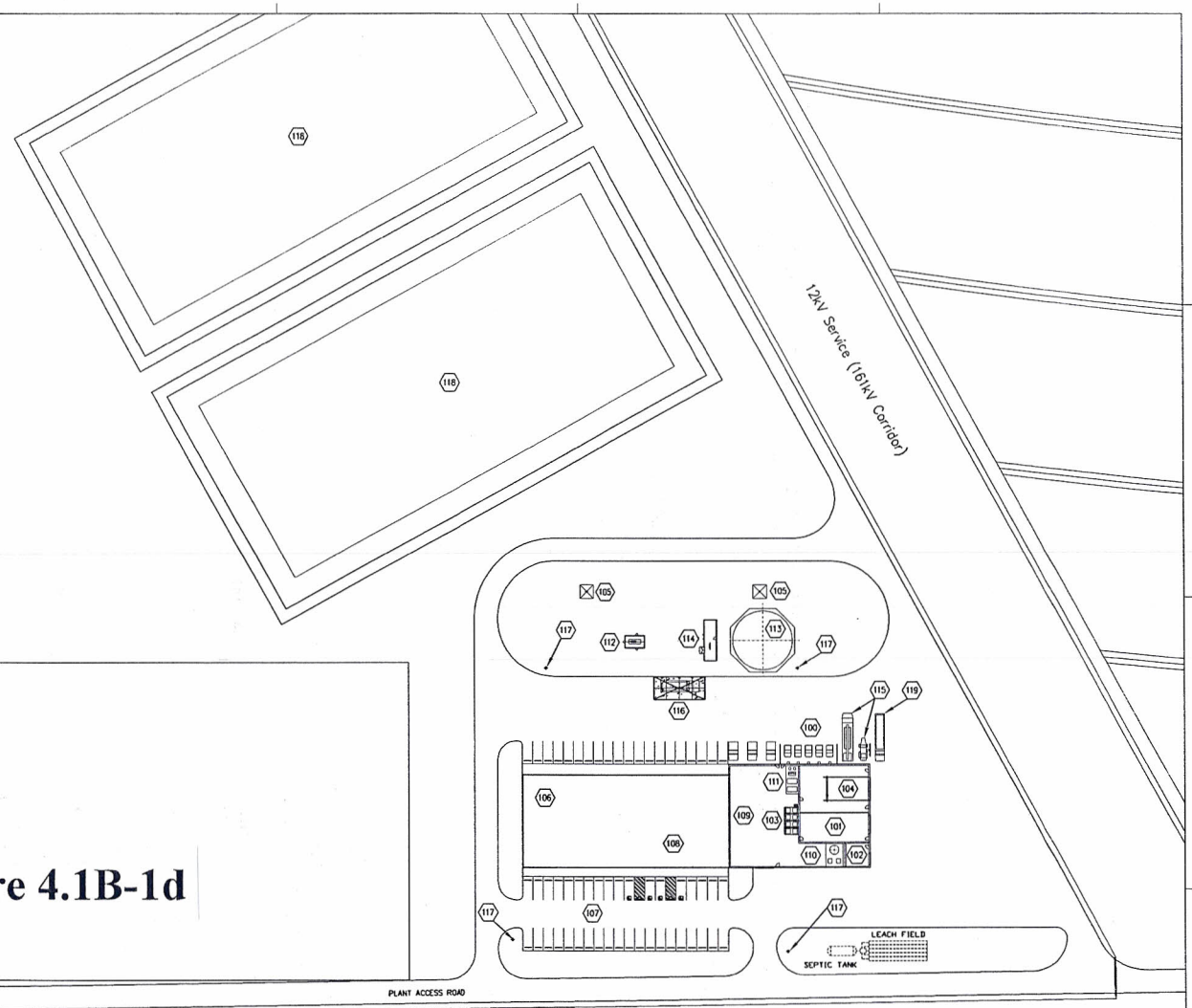

Figure 4.1B-1d

NO.	DATE	REVISION	BY	CHK
0		ISSUED FOR REVIEW	WAN	
1	11/20/12	INCORPORATE 11/19/12 MEETING COMMENTS	JBA	
2	12/5/2012	ISSUED FOR PERMITTING	MTC	
3	12/21/2012	REVISED FOR FW/SW TANK SIZE	JBA	

REVISION APPROVAL		REV DATE	
DISCIPLINE	REVIEWED	DISCIPLINE	REVIEWED
CIVIL		ELECTRICAL	
STRUCTURAL		INST & CNTRL	
MECHANICAL		ARCHITECTURAL	
PROCESS		PLANT LAYOUTS	
PIPING			

STATUS					
ISSUED	REV	DATE	DM	SDE	PEM
PRELIMINARY					
FOR REVIEW AND APPROVAL					
APPROVED FOR CONSTRUCTION					
REVISED & APPROVED FOR CONSTRUCTION					

RESPONSIBLE ENGINEER

PE #

SCALE 1"=50'-0"

BrightSource
BRIGHTSOURCE INDUSTRIES (ISRAEL) LTD. SOLAR ELECTRIC GENERATING SYSTEM

PROJECT NO. 459892

CH2MHILL

EQUIPMENT ARRANGEMENT PLAN
COMMON AREA

DWG. NO. P-1001

REV. 3

BAR IS ONE INCH ON ORIGINAL DRAWING.
0 1"

REUSE OF DOCUMENTS: THIS DOCUMENT, AND THE IDEAS AND DESIGNS INCORPORATED HEREIN, AS AN INSTRUMENT OF PROFESSIONAL SERVICE, IS THE PROPERTY OF CH2M HILL AND IS NOT TO BE USED, IN WHOLE OR IN PART, FOR ANY OTHER PROJECT WITHOUT THE WRITTEN AUTHORIZATION OF CH2M HILL. ©

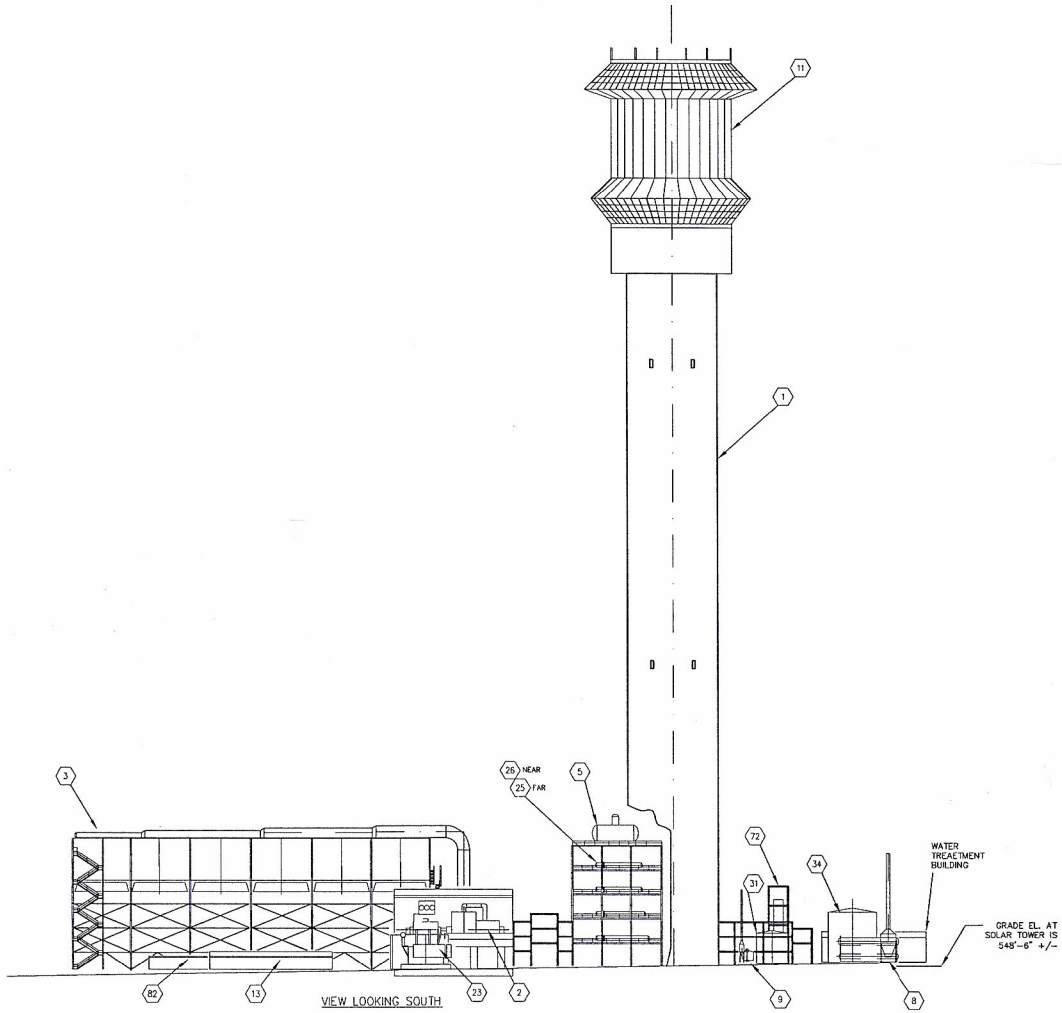

EQUIPMENT LEGEND

1	SOLAR POWER TOWER
2	STEAM TURBINE
3	AIR COOLED CONDENSER (ACC)
5	FEED WATER DEAERATOR
8	START-UP AUXILARY BOILER
9	NIGHT PRESERVATION AUXILARY BOILER (NPAB)
11	SOLAR RECEIVER STEAM GENERATOR (SRSG)
13	PLANT SERVICES BUILDING
23	GSU STEP-UP TRANSFORMER
25	LP WATER HEATERS (4 REQ'D)
26	HP WATER HEATERS (3 REQ'D)
31	DEMIN. WATER STORAGE TANK
34	SERVICE / FIRE WATER STORAGE TANK
72	THERMAL EVAPORATION UNIT
82	MAIN PLANT POWER DISTRIBUTION CENTER

Figure 4.1B-1e

NOTES:

1. FAA OBSTRUCTION LIGHTING:
MEDIUM INTENSITY FLASHING WHITE OBSTRUCTION LIGHT SYSTEM (MWOL). SIX LIGHT UNITS PER LEVEL (0° NORTH 60°, 120°, 180° SOUTH, 240°, 300°).

50 0 50 100
Scale: 1 INCH = 50 FEET

REUSE OF DOCUMENTS: THIS DOCUMENT, AND THE IDEAS AND DESIGNS INCORPORATED HEREIN, AS AN INSTRUMENT OF PROFESSIONAL SERVICE, IS THE PROPERTY OF CH2M HILL AND IS NOT TO BE USED, IN WHOLE OR IN PART, FOR ANY OTHER PROJECT WITHOUT THE WRITTEN AUTHORIZATION OF CH2M HILL. ©

RESPONSIBLE ENGINEER
PE #

NO.	DATE	REVISION	BY	CHK
0	11/14/2012	ISSUED FOR REVIEW	JBA	
1	12/5/2012	ISSUED FOR PERMITTING	MTC	

REVISION APPROVAL		REV	DATE
DISCIPLINE	REVIEWED	DISCIPLINE	REVIEWED
CIVIL		ELECTRICAL	
STRUCTURAL		INST & CNTRL	
MECHANICAL		ARCHITECTURAL	
PROCESS		PLANT LAYOUTS	
PIPING			

STATUS					
ISSUED	REV	DATE	DM	SDE	PEM
PRELIMINARY					
FOR REVIEW AND APPROVAL					
APPROVED FOR CONSTRUCTION					
REVISED & APPROVED FOR CONSTRUCTION					

SCALE 1" = 50'-0"

BrightSource
BRIGHTSOURCE INDUSTRIES (ISRAEL) PALEN SOLAR ELECTRIC GENERATING SYSTEM

PROJECT NO. 459892

CH2MHILL

EQUIPMENT ARRANGEMENT ELEVATION
250MW POWER BLOCK #1
WITHOUT THERMAL STORAGE

DWG. NO. P-1003B

REV. 1

BAR IS ONE INCH ON ORIGINAL DRAWING.
0 1"

Figure 4.1B-2

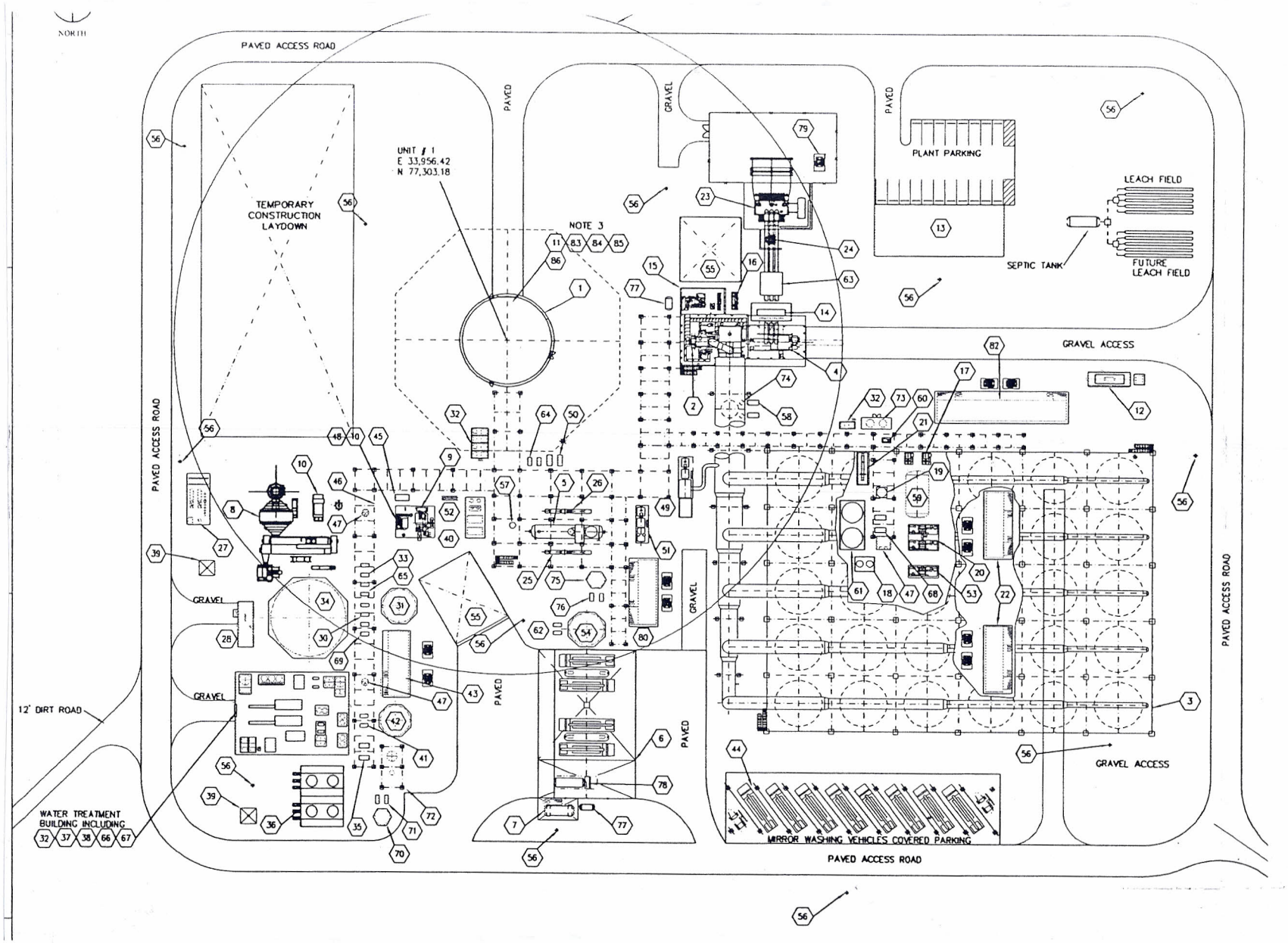

See Key-Next Page

Figure 4.1B-2 Equipment Key/Legend

EQUIPMENT LEGEND

1. SOLAR POWER TOWER
2. STEAM TURBINE
3. AIR COOLED CONDENSER (ACC)
4. STEAM TURBINE GENERATOR
5. FEED WATER DEAERATOR
6. WASH VEHICLE FILLING / FUELING STATION & PARKING
7. 8000 GAL. DIESEL FUEL STORAGE TANK
8. START-UP AUXILARY BOILER
9. NIGHT PRESERVATION AUXILARY BOILER (NPAB)
10. START-UP BOILER & PUMP SKID
11. SOLAR RECEIVER STEAM GENERATOR (SRSG)
12. EMERGENCY DIESEL GENERATOR
13. PLANT SERVICES BUILDING
14. STEAM TURBINE EXCITATION CONTAINER
15. STEAM TURBINE OIL SYSTEMS
16. STEAM TURBINE GLAND STEAM CONDENSER
17. CONDENSATE PUMPS (2 REQ'D)
18. CONDENSATE POLISHER PREFILTER SKID
19. CONDENSATE FILTER AIR RECEIVER
20. ACC VACUUM SKID (NORMAL OPERATION)
21. ACC AIR EJECTOR SKID
22. ACC POWER DISTRIBUTION CENTER TRANSFORMERS
23. GSU STEP-UP TRANSFORMER
24. UNIT AUXILRY TRANSFORMER
25. LP FEED WATER HEATERS (4 REQ'D)
26. HP FEED WATER HEATERS (3 REQ'D)
27. FUEL GAS FILTER/METERING STATION
28. FIRE WATER PUMP HOUSE W/1 DIESEL, 1 ELEC. & 1 JOCKEY PUMP
29. NOT USED
30. DEMIN. WATER TRANSFER PUMPS (2 REQ'D)
31. DEMIN. WATER STORAGE TANK
32. CHEMICAL FEED STATION
33. SERVICE WATER DISTRIBUTION PUMPS (2 REQ'D)
34. SERVICE / FIRE WATER STORAGE TANK
35. CLOSED COOLING WATER (CCW) PUMPS (2 REQ'D)
36. CCW WET SURFACE AIR COOLER (WSAC)
37. POTABLE WATER PUMPS (2 REQ'D)
38. POTABLE WATER GENERATION SKID
39. GROUND WATER WELLS W/PUMPS (2 REQ'D)
40. DUEL AIR COMPRESSOR SKID
41. WASTE WATER PUMPS (2 REQ'D)
42. WASTE WATER STORAGE TANK
43. WATER SYSTEMS POWER DISTRIBUTION CENTER AND TRANSFORMERS
44. MIRROR WASH TRUCKS
45. SAMPLE PANEL
46. NOT USED
47. WASTE WATER SUMP W/ 2 PUMPS (3 REQ'D)
48. NP AUXILARY BOILER DEAERATOR / PUMP SKID
49. TURBINE DRIVE BOILER FEED WATER PUMP
50. START-UP AUXILARY BOILER FEED PUMPS (2 REQ'D)
51. ELECTRIC BOILER FEED WATER PUMP
52. BULK STORAGE NITROGEN BOTTLES
53. ACC VACUUM SKID (NIGHT OPERATION)
54. WASH WATER STORAGE TANK
55. CONSTRUCTION AND MAINTENANCE CRANE PAD
56. FIRE HYDRANT W/HOSE (10)
57. CCW EXPANSION TANK
58. ACC DRAIN PUMPS (2 REQ'D)
59. CONDENSATE TANK
60. ACC WASHING SKID
61. POLISHING SKID
62. WASH WATER PUMPS (2 REQ'D)
63. GENERATOR CIRCUIT BREAKER
64. CLOSED COOLING WATER BOOSTER PUMPS (2 REQ'D)
65. RAW WATER FORWARDING PUMPS (2 REQ'D)
66. SERVICE WATER BAG FILTERS
67. DEMINERALIZED WATER CARTRIDGE FILTERS
68. POLISHER SLUICE PUMPS (2 REQ'D)
69. WSAC MAKE-UP WATER PUMPS (2 REQ'D)
70. RESIDUE TANK
71. RESIDUE TANK PUMPS (2 REQ'D)
72. THERMAL EVAPORATION UNIT
73. SPENT AND CLEAN RESIN STORAGE TANKS
74. CONDENSATE FILTERS (2 REQ'D)
75. DRAINS TANK
76. DRAINS TANK PUMPS (2 REQ'D)
77. OIL WATER SEPARATOR
78. DIESEL FUEL TRUCK REFUELING
79. STATION SERVICE TRANSFORMER
80. BOILER PUMP POWER DISTRIBUTION CENTER AND TRANSFORMER
81. FIN FAN COOLER
82. MAIN PLANT POWER DISTRIBUTION CENTER
83. SRSG CIRCULATING PUMPS (4 REQ'D)
84. SRSG CIRCULATING PUMPS COOLING EXPANSION TANK
85. SRSG FLASH TANK
86. SRSG BLOWDOWN TANK

Figure 4.1B-3 (2 Pages)

Palen Power Block BPIP Structures/Heights

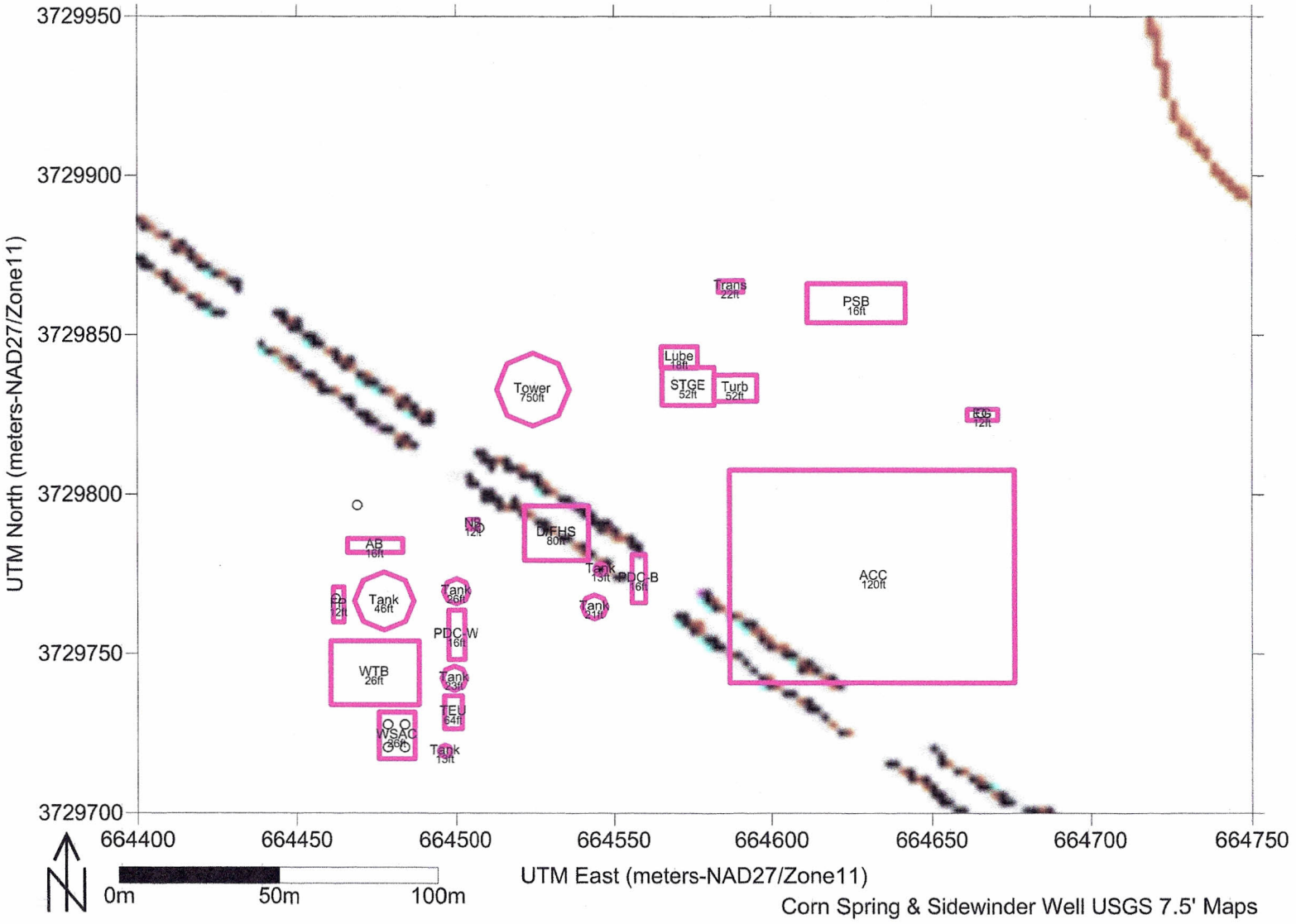

Corn Spring & Sidewinder Well USGS 7.5' Maps

Palen Common Area BPIP Structures/Heights

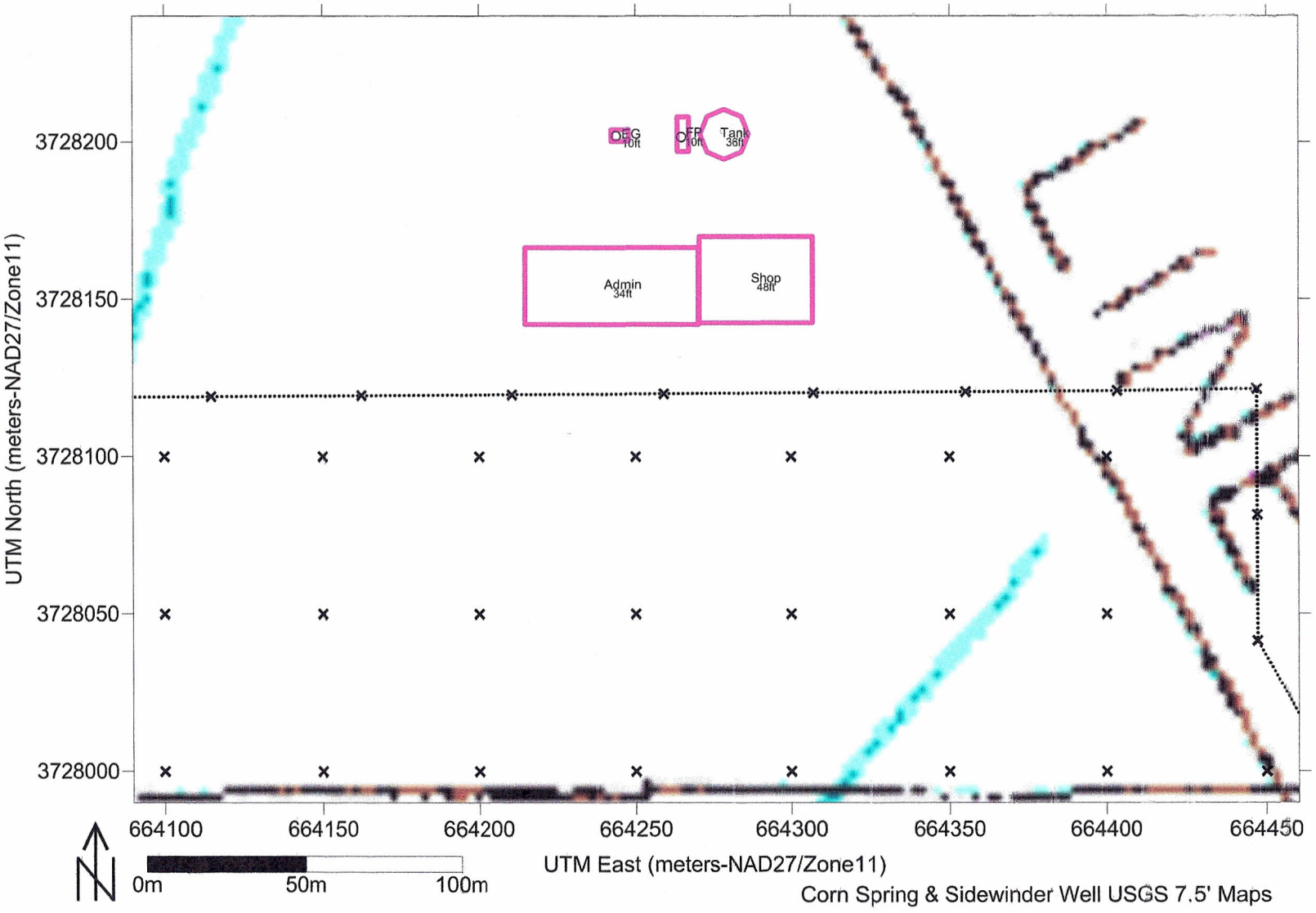

Corn Spring & Sidewinder Well USGS 7.5' Maps

Figure 4.1B-4

Palen Receptor Grids

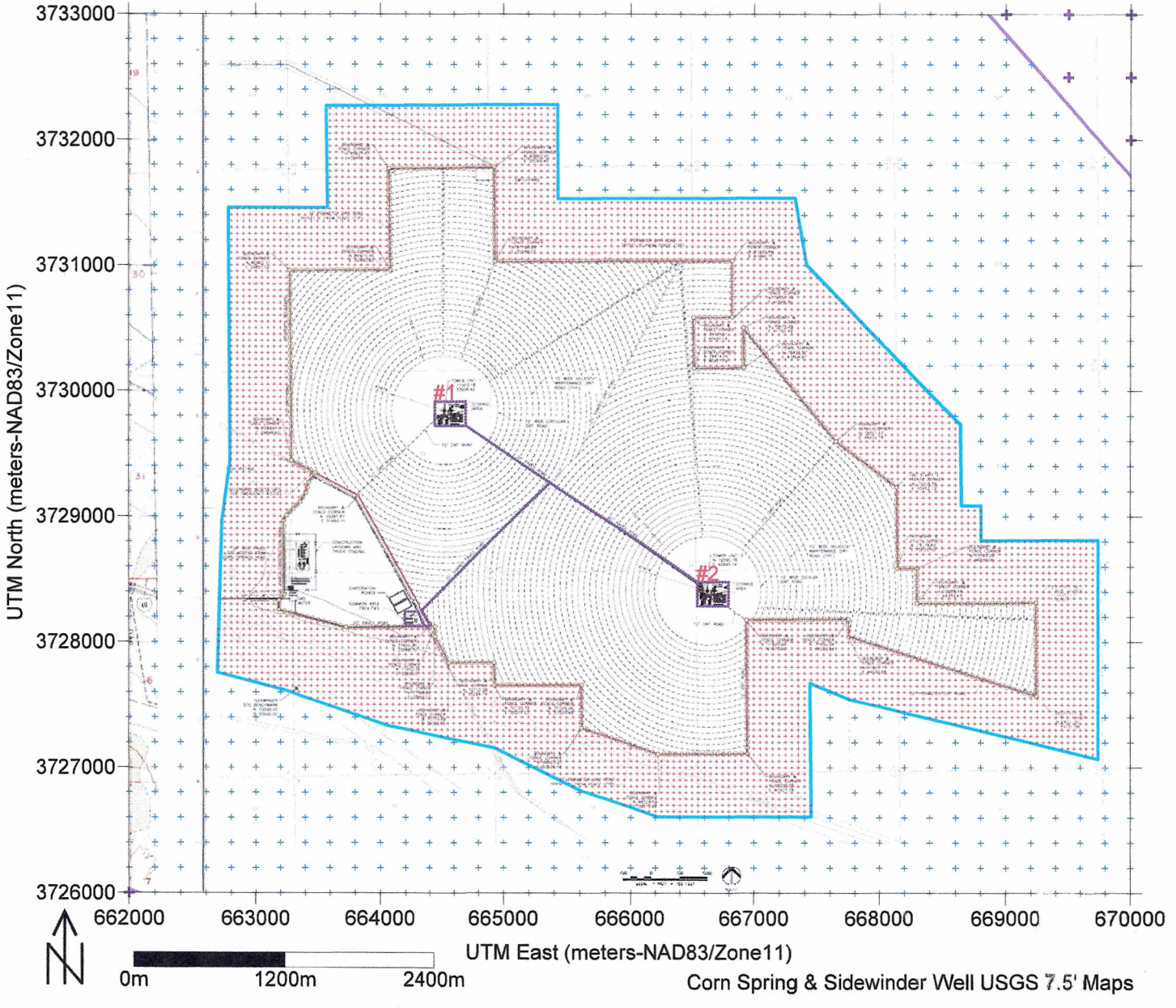

Figure 4.1B-5a

South Coast Air Basin Monitoring Stations (2007-2009)

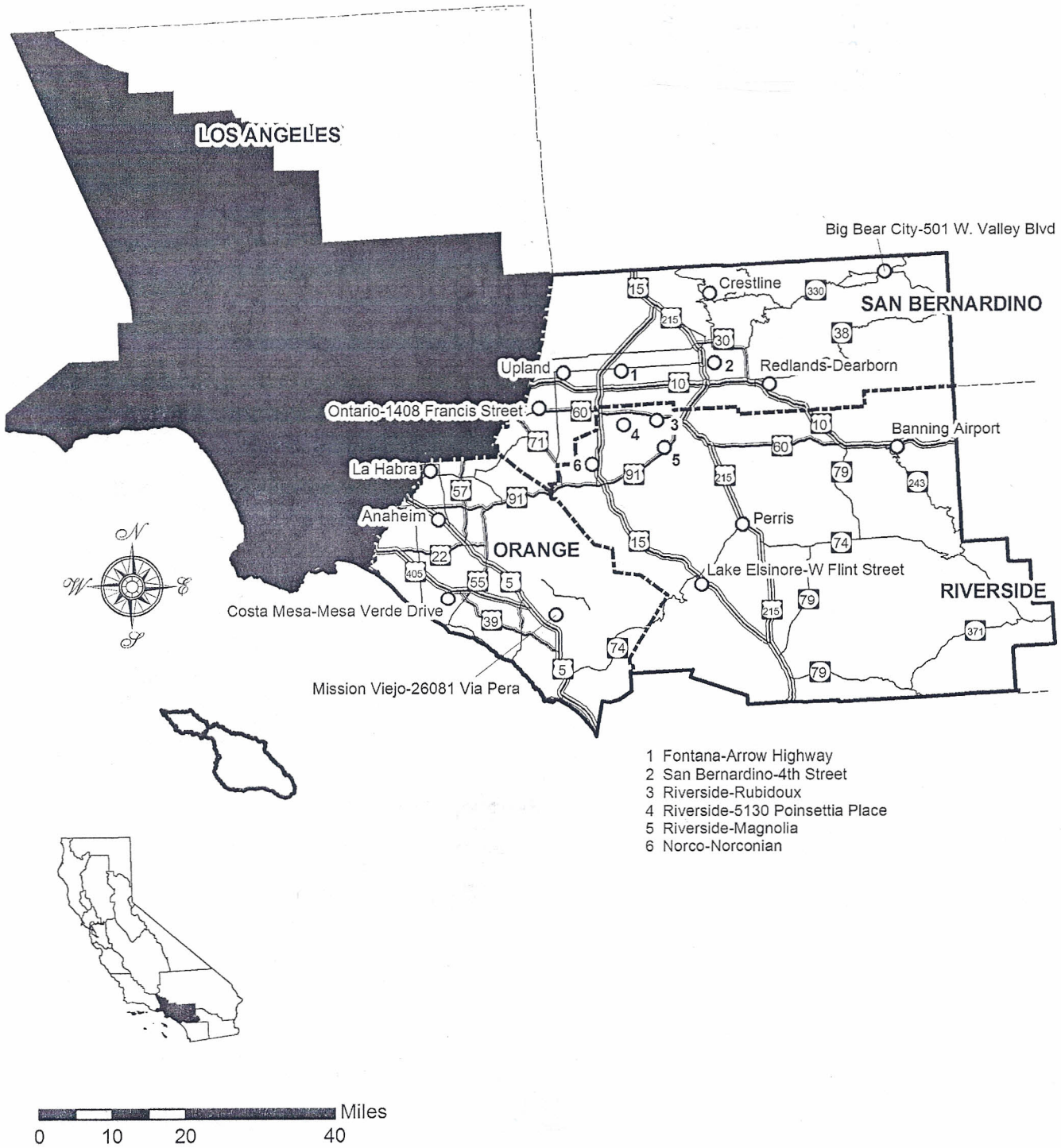

Figure 4.1B-5b Salton Sea Air Basin Monitoring Stations (2007-2009)

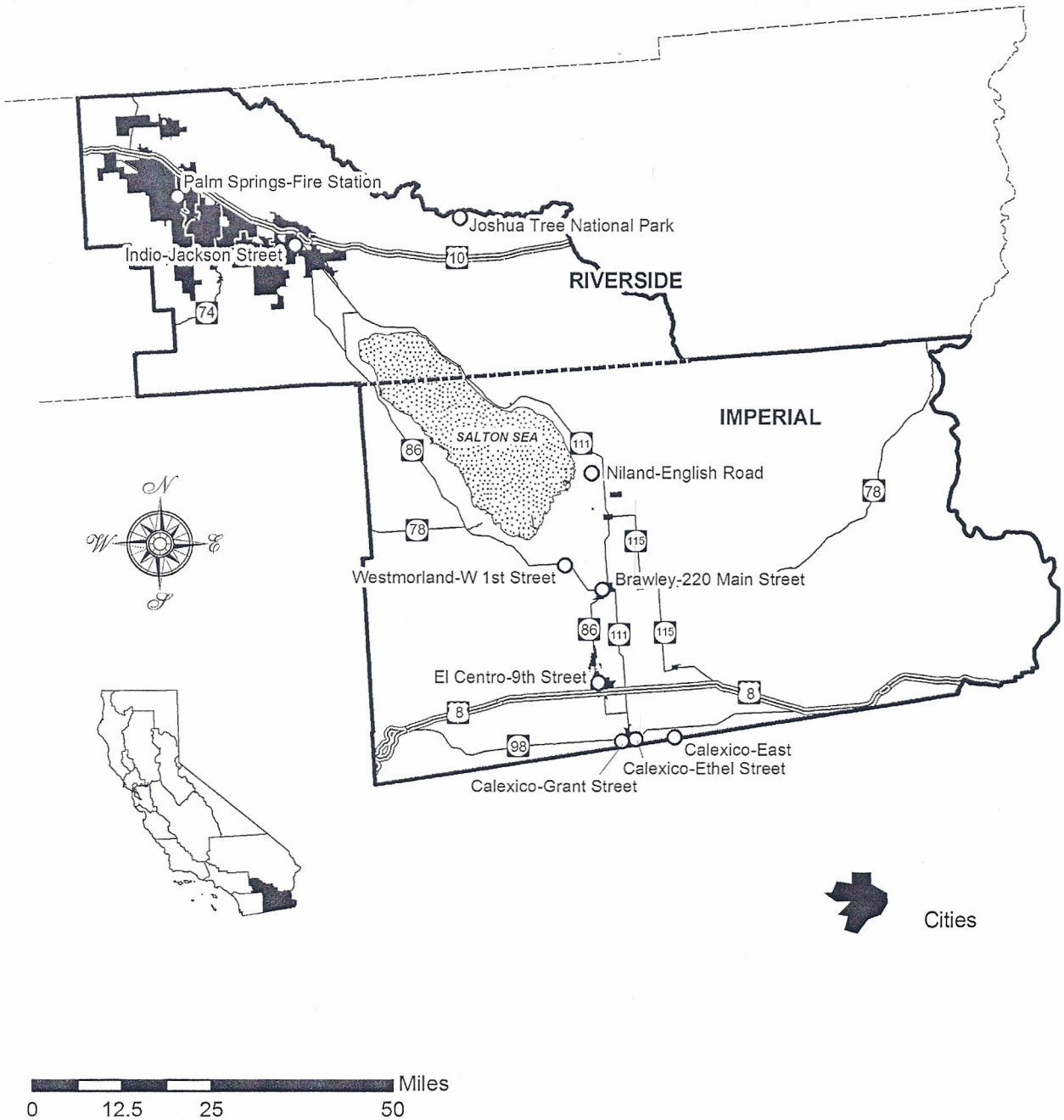

Figure 4.1B-5c Mojave Desert Air Basin Monitoring Stations (2007-2009)

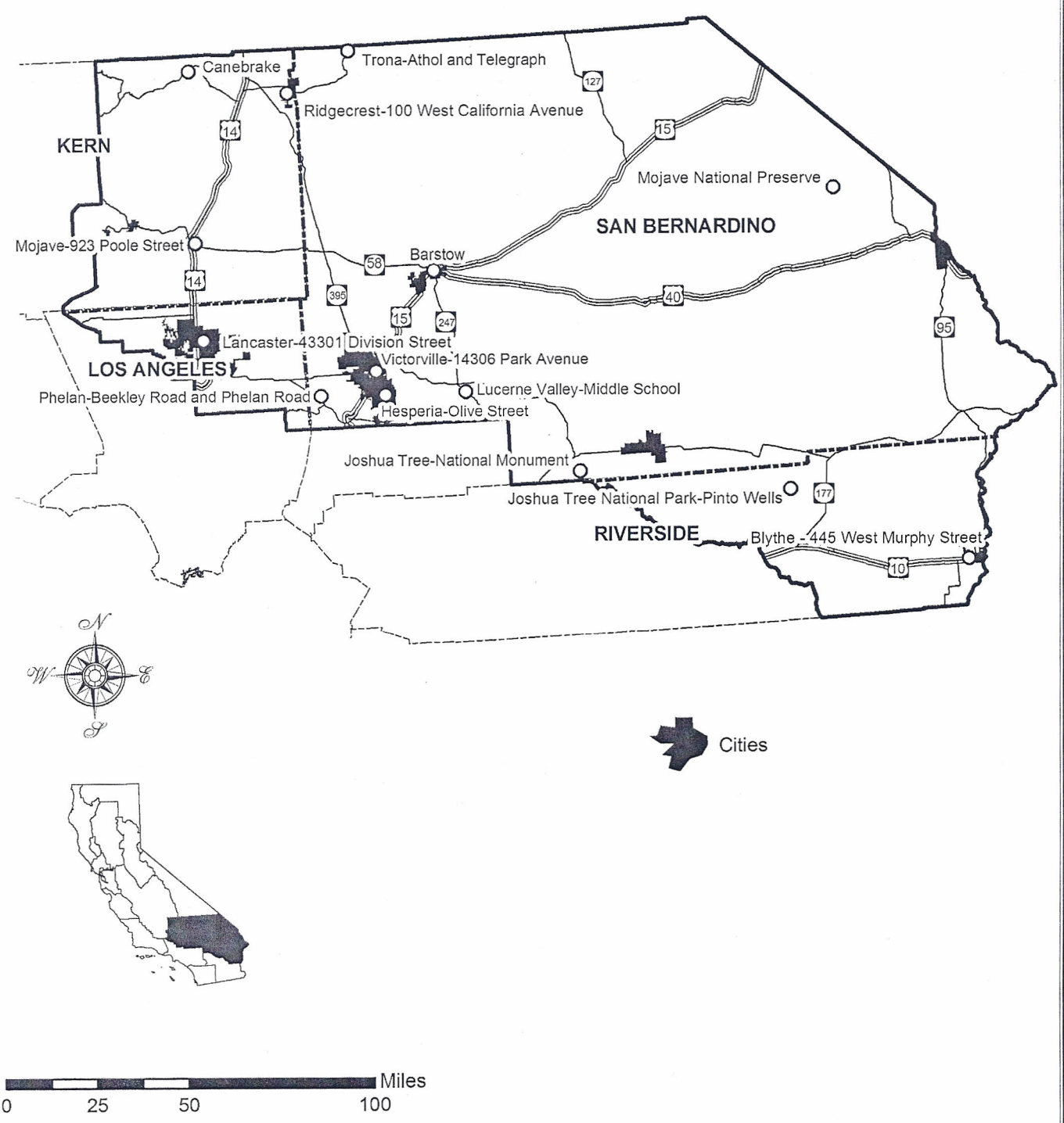

Figure 4.1B-6 Blythe Wind Roses (3 pages)

Annual Wind Rose (2002-2006)

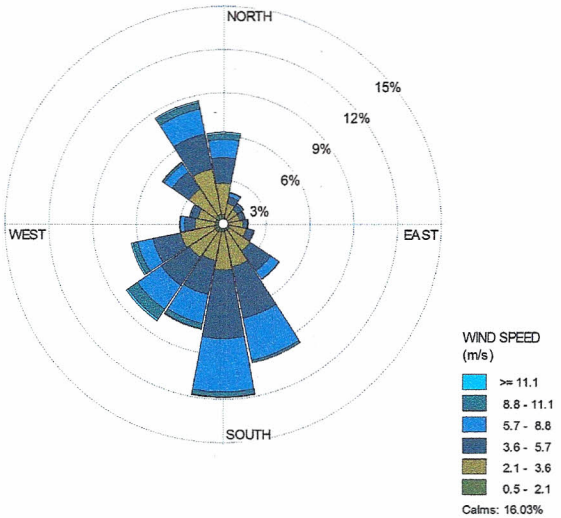

Winter Wind Rose (2002-2006)

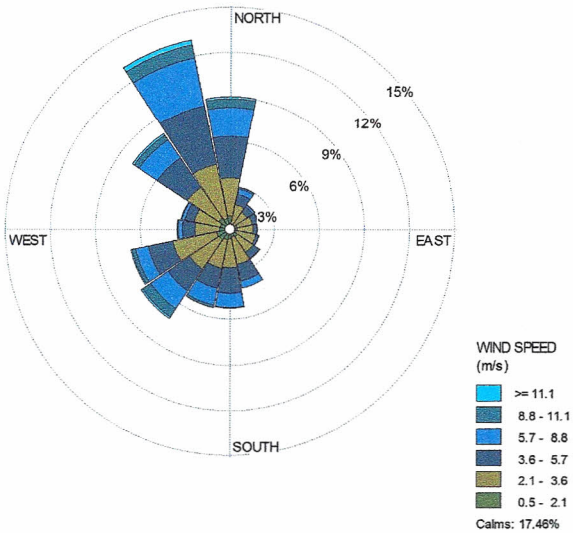

Spring Wind Rose (2002-2006)

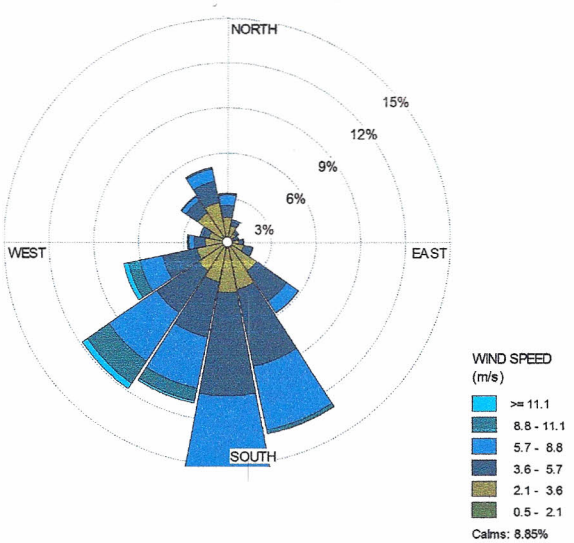

Summer Wind Rose (2002-2006)

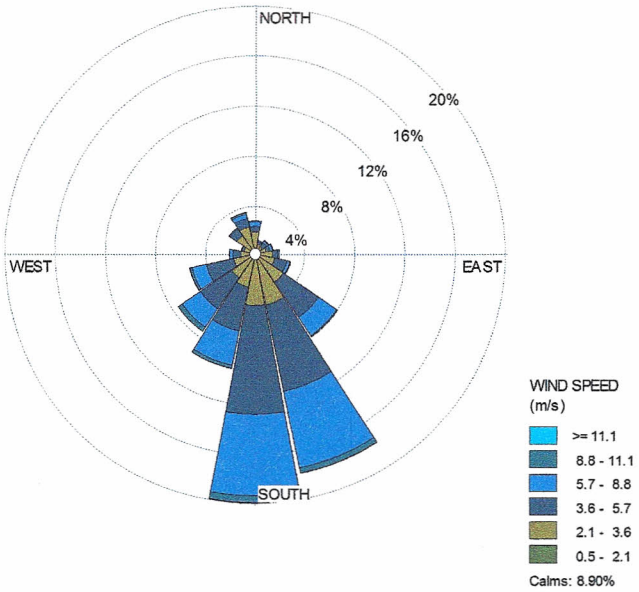

Fall Wind Rose (2002-2006)

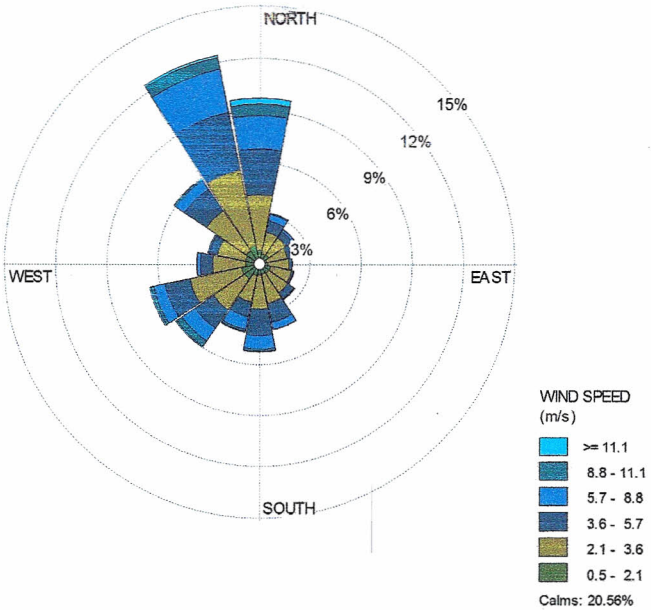

APPENDIX 4.1C

Protocol for Increments Analysis

Overview of Requirements for Increments Analysis

The federal Prevention of Significant Deterioration (PSD) program is intended to ensure that economic growth in areas with good air quality occurs without causing the deterioration of that air quality to unhealthful levels. The PSD program contains a number of requirements that apply to new or modified sources of air pollution that are located in clean air areas.

These PSD program requirements, applied on a pollutant-specific basis, include conducting an increments analysis to demonstrate that no increments will be exceeded as a result of the proposed new or modified source.

The PSEGS project is **not** expected to trigger the requirements of the PSD program. Therefore, no increment analysis is proposed at this time.

Should a determination be made in the future that the PSD regulations apply, or emissions levels are such that PSD becomes applicable, a protocol will be submitted which will outline the required review, analyses, and methodologies to be used.

Appendix 4.1D

Health Risk Assessment Support Data

Health Risk Assessment Process, Goals, Assumptions, and Uses

"In recent years, the public has become increasingly aware of the presence of harmful chemicals in our environment. Many people express concerns about pesticides and other foreign substances in food, contaminants in drinking water, and toxic pollutants in the air. Others believe these concerns are exaggerated or unwarranted. How can we determine which of these potential hazards really deserve attention? How do we, as a society, decide where to focus our efforts and resources to control these hazards? When we hear about toxic threats that affect us personally, such as the discovery of industrial waste buried in our neighborhood or near our children's school, how concerned should we be?

Health risk assessment is a scientific tool designed to help answer these questions. Government agencies rely on risk assessments to help them determine which potential hazards are the most significant. Risk assessments can also guide regulators in abating environmental hazards. Members of the public who learn the basics of risk assessment can improve their understanding of both real and perceived environmental hazards, and they can work more effectively with decision makers on solutions to environmental problems.

Chemicals can be either beneficial or harmful, depending on a number of factors, such as the amounts to which we are exposed. Low levels of some substances may be necessary for good health, but higher levels may be harmful. Health risk assessments are used to determine if a particular chemical poses a significant risk to human health and, if so, under what circumstances. Could exposure to a specific chemical cause significant health problems? How much of the chemical would someone have to be exposed to before it would be dangerous? How serious could the health risks be? What activities might put people at increased risk?

If it were possible to prevent all human exposure to all hazardous chemicals, there would be no need for risk assessment. However, the total removal of harmful pollutants from the environment is often infeasible or impossible, and many naturally occurring substances also pose health risks. Risk assessment helps scientists and regulators identify serious health hazards and determine realistic goals for reducing exposure to toxics so that there is no significant health threat to the public.

Estimating the hazards posed by toxic chemicals in the environment involves the compilation and evaluation of complex sets of data. Government regulators, therefore, turn to specialists to perform or assist with risk assessments. These specialists include scientists with degrees in toxicology (the study of the toxic effects of chemicals) and epidemiology (the study of disease or illness in populations) as well as physicians, biologists, chemists, and engineers.

The term "health risk assessment" is often misinterpreted. People sometimes think that a risk assessment will tell them whether a current health problem or symptom was caused by exposure

to a chemical. This is not the case. Scientists who are searching for links between chemical exposures and health problems in a community may conduct an epidemiologic study. These studies typically include a survey of health problems in a community and a comparison of health problems in that community with those in other cities, communities, or the population as a whole.

Although they are both important, health risk assessments and epidemiologic studies have different objectives. Most epidemiologic studies evaluate whether *past* chemical exposures may be responsible for documented health problems in a specific group of people. In contrast, health risk assessments are used to estimate whether current or future chemical exposures will pose health risks to a broad population, such as a city or a community. Scientific methods used in health risk assessment cannot be used to link individual illnesses to past chemical exposures, nor can health risk assessments and epidemiologic studies prove that a specific toxic substance caused an individual's illness.

The U.S. Environmental Protection Agency (U.S. EPA) is a leading risk assessment agency at the federal level. In California, the Office of Environmental Health Hazard Assessment (OEHHA) in the California Environmental Protection Agency (Cal/EPA) has the primary responsibility for developing procedures and practices for performing health risk assessments. Other agencies within Cal/EPA, such as the Department of Pesticide Regulation and the Department of Toxic Substances Control, have extensive risk assessment programs of their own but work closely with OEHHA.

The Department of Pesticide Regulation uses risk assessments to make regulatory decisions concerning safe pesticide uses. The Department of Toxic Substances Control uses risk assessments to determine requirements for the management and cleanup of hazardous wastes. OEHHA's health risk assessments are used by the Air Resources Board to develop regulations governing toxic air contaminants, and by the Department of Health Services to develop California's drinking water standards. These agencies' decisions take into account the seriousness of potential health effects along with the economic and technical feasibility of measures that can reduce the health risks.

Health risk assessment requires both sound science and professional judgment and is a constantly developing process. Cal/EPA is nationally recognized for developing new procedures that improve the accuracy of risk assessments. Cal/EPA also works closely with U.S. EPA in all phases of risk assessment.

The risk assessment process is typically described as consisting of four basic steps: hazard identification, exposure assessment, dose-response assessment, and risk characterization. Each of these steps will be explained in the following text.

Hazard Identification

In the first step, hazard identification, scientists determine the types of health problems a chemical could cause by reviewing studies of its effects in humans and laboratory animals. Depending on the chemical, these health effects may include short-term ailments, such as headaches; nausea; and eye, nose, and throat irritation; or chronic diseases, such as cancer. Effects on sensitive populations, such as pregnant women and their developing fetuses, the elderly, or those with health problems

(including those with weakened immune systems), must also be considered. Responses to toxic chemicals will vary depending on the amount and length of exposure. For example, short-term exposure to low concentrations of chemicals may produce no noticeable effect, but continued exposure to the same levels of chemicals over a long period of time may eventually cause harm. An important step in hazard identification is the selection of key research studies that can provide accurate, timely information on the hazards posed to humans by a particular chemical. The selection of a study is based upon factors such as whether the study has been peer reviewed by qualified scientists, whether the study's findings have been verified by other studies, and the species tested (human studies provide the best evidence). Some studies may involve humans that have been exposed to the chemical, while others may involve studies with laboratory animals.

Human data frequently are useful in evaluating human health risks associated with chemical exposures. Human epidemiologic studies typically examine the effects of chemical exposure on a large number of people, such as employees exposed to varying concentrations of chemicals in the workplace. In many cases, these exposures took place prior to the introduction of modern worker-safety measures.

One weakness of occupational studies is that they generally measure the effects of chemicals on healthy workers and do not consider children, the elderly, those with pre-existing medical conditions, or other sensitive groups. Since occupational studies are not controlled experiments, there may be uncertainties about the amount and duration of exposure or the influence of lifestyle choices, such as smoking or alcohol use, on the health of workers in the studies. Exposure of workers to other chemicals at the same time may also influence and complicate the results.

Laboratory studies using human volunteers are better able to gauge some health effects because chemical exposures can then be measured with precision. But these studies usually involve small numbers of people and, in conformance with ethical and legal requirements, use only adults who agree to participate in the studies. Moreover, laboratory studies often use simple measurements that identify immediate responses to the chemical but might miss significant, longer-term health effects. Scientists can also use physicians' case reports of an industrial or transportation accident in which individuals were unintentionally exposed to a chemical. However, these reports may involve very small numbers of people, and the level of exposure to the chemical could be greater than exposures to the same chemical in the environment. Nevertheless, human studies are preferred for risk assessment, so OEHHA makes every effort to use them when they are available.

Because the effects of the vast majority of chemicals have not been studied in humans, scientists must often rely on animal studies to evaluate a chemical's health effects. Animal studies have the advantage of being performed under controlled laboratory conditions that reduce much of the uncertainty related to human studies. If animal studies are used, scientists must determine whether a chemical's health effects in humans are likely to be similar to those in the animals tested. Although effects seen in animals can also occur in humans, there may be subtle or even significant differences in the ways humans and experimental animals react to a chemical. Comparison of human and animal metabolism may be useful in selecting the animal species that should be studied, but it is often not possible to determine which species is most like humans in its response to a chemical exposure. However, if similar effects were found in more than one species, the results would strengthen the evidence that humans may also be at risk.

Exposure Assessment

In exposure assessment, scientists attempt to determine how long people were exposed to a chemical; how much of the chemical they were exposed to; whether the exposure was continuous or intermittent; and how people were exposed—through eating, drinking water and other liquids, breathing, or skin contact. All of this information is combined with factors such as breathing rates, water consumption, and daily activity patterns to estimate how much of the chemical was taken into the bodies of those exposed.

People can be exposed to toxic chemicals in various ways. These substances can be present in the air we breathe, the food we eat, or the water we drink. Some chemicals, due to their particular characteristics, may be both inhaled and ingested. For example, airborne chemicals can settle on the surface of water, soil, leaves, fruits, vegetables, and forage crops used as animal feed. Cows, chickens, or other livestock can become contaminated when eating, drinking, or breathing the chemicals present in the air, water, feed, and soil. Fish can absorb the chemicals as they swim in contaminated water or ingest contaminated food. Chemicals can be absorbed through the skin, so infants and children can be exposed simply by crawling or playing in contaminated dirt. They can also ingest chemicals if they put their fingers or toys in their mouths after playing in contaminated dirt. Chemicals can also be passed on from nursing mothers to their children through breast milk.

To estimate exposure levels, scientists rely on air, water, and soil monitoring; human blood and urine samples; or computer modeling. Although monitoring of a pollutant provides excellent data, it is time consuming, costly, and typically limited to only a few locations. For those reasons, scientists often rely on computer modeling, which uses mathematical equations to describe how a chemical is released and to estimate the speed and direction of its movement through the surrounding environment. Modeling has the advantage of being relatively inexpensive and less time consuming, provided all necessary information is available and the accuracy of the model can be verified through testing.

Computer modeling is often used to assess chemical releases from industrial facilities. Such models require information on the type of chemicals released, facilities' hours of operation, industrial processes that release the chemicals, smokestack height and temperature, any pollution-control equipment that is used, surrounding land type (urban or rural), local topography and meteorology, and census data regarding the exposed population.

In all health risk assessments, scientists must make assumptions in order to estimate human exposure to a chemical. For example, scientists assessing the effects of air pollution may need to make assumptions about the time people spend outdoors, where they are more directly exposed to pollutants in the ambient air, or the time they spend in an area where the pollution is greatest. An assessment of soil contamination may require scientists to make assumptions about people's consumption of fruits and vegetables that may absorb soil contaminants.

To avoid underestimating actual human exposure to a chemical, scientists often look at the range of possible exposures. For example, people who jog in the afternoon, when urban air pollution levels are highest, would have much higher exposures to air pollutants than people who come home after work and relax indoors. Basing an exposure estimate on a value near the higher end of

a range of exposure levels (closer to the levels experienced by the jogger than by the person remaining indoors) provides a realistic worst-case estimate of exposure. These kinds of conservative assumptions, which presume that people are exposed to the highest amounts of a chemical that can be considered credible, are referred to as "health-protective" assumptions.

Dose-Response Assessment

In dose-response assessment, scientists evaluate the information obtained during the hazard identification step to estimate the amount of a chemical that is likely to result in a particular health effect in humans.

An established principle in toxicology is that "the dose makes the poison." For example, a commonplace chemical like table salt is harmless in small quantities, but it can cause illness in large doses. Similarly, hydrochloric acid, a hazardous chemical, is produced naturally in our stomachs but can be quite harmful if taken in large doses.

Scientists perform a dose-response assessment to estimate how different levels of exposure to a chemical can impact the likelihood and severity of health effects. The dose-response relationship is often different for many chemicals that cause cancer than it is for those that cause other kinds of health problems.

Cancer Effects

For chemicals that cause cancer, the general assumption in risk assessment has been that there are no exposures that have "zero risk" unless there is clear evidence otherwise. In other words, even a very low exposure to a cancer-causing chemical may result in cancer if the chemical happens to alter cellular functions in a way that causes cancer to develop. Thus, even very low exposures to carcinogens might increase the risk of cancer, if only by a very small amount.

Several factors make it difficult to estimate the risk of cancer. Cancer appears to be a progressive disease because a series of cellular transformations is thought to occur before cancer develops. In addition, cancer in humans often develops many years after exposure to a chemical. Also, the best information available on the ability of chemicals to cause cancer often comes from studies in which a limited number of laboratory animals are exposed to levels of chemicals that are much higher than the levels humans would normally be exposed to in the environment. As a result, scientists use mathematical models based on studies of animals exposed to high levels of a chemical to estimate the probability of cancer developing in a diverse population of humans exposed to much lower levels. The uncertainty in these estimates may be rather large. To reduce these uncertainties, risk assessors must stay informed of new scientific research. Data from new studies can be used to improve estimates of cancer risks.

Non-cancer Effects

Non-cancer health effects (such as asthma, nervous system disorders, birth defects, and developmental problems in children) typically become more severe as exposure to a chemical increases. One goal of dose-response assessment is to estimate levels of exposure that pose only a low or negligible risk for non-cancer health effects. Scientists analyze studies of the health effects of a chemical to develop this estimate. They take into account such factors as the quality of the scientific studies, whether humans or laboratory animals were studied, and the degree to which some people may be more sensitive to the chemical than others. The estimated level of exposure

that poses no significant health risks can be reduced to reflect these factors.

Risk Characterization

The last step in risk assessment brings together the information developed in the previous three steps to estimate the risk of health effects in an exposed population. In the risk characterization step, scientists analyze the information developed during the exposure and dose-response assessments to describe the resulting health risks that are expected to occur in the exposed population. This information is presented in different ways for cancer and non-cancer health effects, as explained below.

Cancer Risk

Cancer risk is often expressed as the maximum number of new cases of cancer projected to occur in a population of one million people due to exposure to the cancer-causing substance over a 70-year lifetime. For example, a cancer risk of one in one million means that in a population of one million people, not more than one additional person would be expected to develop cancer as the result of the exposure to the substance causing that risk.

An individual's actual risk of contracting cancer from exposure to a chemical is often less than the theoretical risk to the entire population calculated in the risk assessment. For example, the risk estimate for a drinking-water contaminant may be based on the health-protective assumption that the individual drinks two liters of water from a contaminated source daily over a 70-year lifetime. However, an individual's actual exposure to that contaminant would likely be lower due to a shorter time of residence in the area. Moreover, an individual's risk not only depends on the individual's exposure to a specific chemical but also on his or her genetic background (i.e., a family history of certain types of cancer); health; diet; and lifestyle choices, such as smoking or alcohol consumption.

Cancer risks presented in risk assessments are often compared to the overall risk of cancer in the general U.S. population (about 250,000 cases for every one million people) or to the risk posed by all harmful chemicals in a particular medium, such as the air. The cancer risk from breathing current levels of pollutants in California's ambient air over a 70-year lifetime is estimated to be 760 in one million.

Non-cancer Risk

Non-cancer risk is usually determined by comparing the actual level of exposure to a chemical to the level of exposure that is not expected to cause any adverse effects, even in the most susceptible people. Levels of exposure at which no adverse health effects are expected are called "health reference levels," and they generally are based on the results of animal studies. However, scientists usually set health reference levels much lower than the levels of exposure that were found to have no adverse effects in the animals tested. This approach helps to ensure that real health risks are not underestimated by adjusting for possible differences in a chemical's effects on laboratory animals and humans; the possibility that some humans, such as children and the elderly, may be particularly sensitive to a chemical; and possible deficiencies in data from the animal studies.

Depending on the amount of uncertainty in the data, scientists may set a health reference level 100 to 10,000 times lower than the levels of exposure observed to have no adverse effects in

animal studies. Exposures above the health reference level are not necessarily hazardous, but the risk of toxic effects increases as the dose increases. If an assessment determines that human exposure to a chemical exceeds the health reference level, further investigation is warranted.

Risk managers rely on risk assessments when making regulatory decisions, such as setting drinking water standards, or developing plans to clean up hazardous waste sites. Risk managers are responsible for protecting human health, but they must also consider public acceptance, as well as technological, economic, social, and political factors, when arriving at their decisions. For example, they may need to consider how much it would cost to remove a contaminant from drinking water supplies or how seriously the loss of jobs would affect a community if a factory were to close due to the challenge of meeting regulatory requirements that are set at the most stringent level.

Health risk assessments can help risk managers weigh the benefits and costs of various alternatives for reducing exposure to chemicals. For example, a health risk assessment of a hazardous waste site could help determine whether placing a clay cap over the waste to prevent exposure would offer the same health protection as the more costly option of removing the waste from the site.

One of the most difficult questions of risk management is: How much risk is acceptable? While it would be ideal to completely eliminate all exposure to hazardous chemicals, it is usually not possible or feasible to remove all traces of a chemical once it has been released into the environment. The goal of most regulators is to reduce the health risks associated with exposure to hazardous pollutants to a negligibly low level.

Regulators generally presume that a one-in-one million risk of cancer from life-long exposure to a hazardous chemical is an "acceptable risk" level because the risk is extremely low compared to the overall cancer rate. If a drinking water standard for a cancer-causing chemical were set at the level posing a "one-in-one million" risk, it would mean that not more than one additional cancer case (beyond what would normally occur in the population) would potentially occur in a population of one million people drinking water meeting that standard over a 70-year lifetime.

Actual regulatory standards for chemicals or hazardous waste cleanups may be set at less stringent risk levels, such as one in 100,000 (not more than one additional cancer case per 100,000 people) or one in 10,000 (not more than one additional cancer case per 10,000 people). These less stringent risk levels are often due to economic or technological considerations. Regulatory agencies generally view these higher risk levels to be acceptable if there is no feasible way to reduce the risks further."[1]

[1] A Guide to Health Risk Assessment, CalEPA-Office of Environmental Health Hazard Assessment, 2001.

The exposure and dose-response estimates for the project analysis were conducted using HARP (Version 1.4f).

The following tables summarize the results of the HRA performed by the proposed PSEGS facility.

TABLE 4.1D-1 CRITERIA AND AIR TOXIC POLLUTANTS EMITTED FROM PSEGS FACILITY	
NOx	Diesel Particulate Matter
CO	Copper
VOC*	Beryllium
SOx	Acetaldehyde
PM10/PM2.5	Acrolein
1-3 Butadiene	Benzene
Formaldehyde	Ethylbenzene
PAHs	Hexane
Propylene	Naphthalene
Toluene	Propylene Oxide
	Xylenes

Table 4.1D-2 Significant Health Effect Threshold Levels for SCAQMD	
Risk Category	Risk Threshold*
Cancer Risk	>1.0 x 10^{-6} without TBACT >10 x 10^{-6} with TBACT
Chronic Hazard Index	>1.0
Acute Hazard Index	>1.0
Cancer Burden	>0.5

*Per Rule 1401 SCAQMD at the MIR (PMI).

No specific health related studies prepared by either the local health department or the local air district were identified which pertain to the local project area for any identified toxic air pollutant or identified specific population.

The other assumptions used in running the HARP program were as follows:

- Emission rates for non-criteria pollutants are taken from Section 4.1, and from Appendix 4.1A.
- Number of residents affected is based upon the 2010 population data for those census tracts or portions of census tracts which lie within the maximum impact receptor radius of the proposed facility.
- All receptors were treated as residential receptors, which allows for the assumption that the MIR, if assumed residential, will represent the highest risk and no other receptor will show risks higher than the MIR. This deletes the need for running worker risks. The HARP risk run options as recommended by South Coast AQMD (Chico, 10-20-05) were utilized (i.e., for cancer – 70-year and derived adjusted method; for chronic – 70-year and derived OEHHA method; for acute – no options).
- Based on the previous bullet, the MIR is the highest offsite point of maximum impact (PMI) that cannot be deleted from the HRA analysis due to not meeting the criteria of a receptor than can be inhabited for the entire exposure period, i.e., receptors in roadways, riverbeds, parks, etc., are not considered in the MIR (PMI) receptor selection.

- Deposition velocity is taken to be 0.02 m/s, as recommended by ARB for controlled emission sources.
- Fraction of residents with gardens is taken to be 0.15 which is likely conservatively high for the rural (desert) area near the project site.
- Fraction of produce grown at home is taken to be 0.15, which is also likely to be conservatively high for the rural (desert) area near the project site.

The HARP program is a tool that assists with the programmatic requirements of the Air Toxics Hot Spots Program, and it can be used for preparing health risk assessments for other related programs such as air toxic control measure development or facility permitting applications. HARP is a computer based risk assessment program which combines the tools of emission inventory database, facility prioritization, air dispersion modeling, and risk assessment analysis. Use of HARP promotes statewide consistency in the area of risk assessment, increases the efficiency of evaluating potential health impacts, and provides a cost effective tool for developing facility health risk assessments. HARP may be used on single sources, facilities with multiple sources, or multiple facilities in close proximity to each other. The receptor grid used in HARP was the same as the grid used in the air quality impact analysis (AERMOD). The AERMOD files used in the HARP analysis were processed via the HARP On-Ramp program.

The HARP program results for acute and chronic inhalation and chronic non-inhalation exposures, cancer burden and individual cancer risk (workplace and residential) for the proposed sources are included in this Appendix (as electronic files on the CD).

The modeling results show that the maximum modeled cancer risk (MIR) from PSEGS is expected to be $4.03xE^{-6}$. This risk is well below the ten in one million level (with T-BACT), and the SCAQMD significance value. The chronic and acute non-cancer hazard indices are 0.00253 and 0.000108, respectively (at the cancer MIR location). Both are well below the significant impact level of 1.0. The 1×10^{-6} isopleth was located approximately 6,000 feet from the site grid center. At this radius there are no impacted populations, therefore the total cancer burden was calculated to be 0.0, which is also well below the District threshold value of 1.0. Detailed calculations and results for each significant receptor are included in the modeling results, which are being submitted electronically.

TABLE 4.1D-3 HEALTH RISK ASSESSMENT SUMMARY (MIR)		
Stationary Sources Only		
Risk Category	Facility Values	Applicable Significance Threshold
Cancer Risk	4.03E-6	See Table 4.1D-2
Chronic Hazard Index	0.00253	
Acute Hazard Index	0.000108	
Cancer Burden	0	
Facility MIR location coordinates are: Cancer risk and chronic MIR – 664307mE, 3728120mN (Grid Receptor 353) Acute MIR location coordinates are: Acute MIR – 672600mE, 3726800mN (Grid Receptor 5551)		

Diesel Fuel Related Health Risk

With respect to emissions from diesel fueled engines, use of the diesel PM emissions factor and exposure factors is approved by CARB for the characterization of diesel engine exhaust and subsequent risk exposures. The diesel PM factor includes the range of fuel bound, and potentially emitted metals, PAHs, and a wide variety of other semi-volatile substances. CARB notes the following in Appendix K of the current HARP Users Manual:

1. The surrogate for whole diesel exhaust is diesel PM. PM10 is the basis for the potential risk calculations.
2. When conducting an HRA, the potential cancer risk from inhalation exposure to diesel PM will outweigh the potential non-cancer health effects.
3. When comparing whole diesel exhaust to speciated diesel exhaust, potential cancer risk from inhalation exposure to whole diesel exhaust will outweigh the multi-pathway cancer risk from the speciated compounds. For this reason, there will be few situations where an analysis of multi-pathway risk is necessary.

<u>With respect to diesel particulate related risk values, the following should be noted:</u>

The US Department of Energy (DOE) as well as the US Environmental Protection Agency (EPA) have disagreed with the CARB/OEHHA and South Coast AQMD positions on the relative threat and relative contribution of diesel exhaust to "toxic" air pollution, and neither of the agencies, including the EPA's prestigious Health Effects Institute identify diesel exhaust as a "known" carcinogen, since the scientific studies show only "weak" cancer links. EPA and DOE believe that the studies relied upon by CARB and SCAQMD are flawed in that they use a problematic elemental carbon surrogate for ambient diesel particulate matter and ignored a significant portion of PM2.5 captured at the SCAQMD's own monitoring stations. In view of these conflicting studies, we suggest that caution be used in the decision making process regarding diesel PM and its associated risks, i.e., the actual risks may be much lower than those calculated by HARP. In turn, the overall risk calculated for the facility may be lower than calculated due to the influence of DPM risk. For these reasons, the risk table above reports the facility risk values with DPM. For purposes of cumulative risk assessment in Section 4.1, facility values with the DPM are used.

The calculated health effects as summarized above do not exceed the district significance threshold values, therefore the health effects would be considered "not significant" and may even be "zero". These results are also provided on the air modeling CD.

The following tables and figures are presented at the end of this appendix:

Table 4.1D-4	Sensitive Receptor Listing for the Primary Impact Area
Table 4.1D-5	OEHHA/CARB Risk Assessment Health Values
Table 4.1D-6	Census Tract Numbers and Population Data
Figure 4.1D-1	Map of Census Tracts in the Site Area
Figure 4.1D-2	6-Mile Radius Zone Map
Figure 4.1D-3	3 Highest Cancer MIR Locations

Table 4.1D-6 Census Tract Numbers and Population Data (2010)

Tract Number	Tract Population (2010)
469	2,043

Table 4.1D-4 Sensitive Receptors and Residential and Worker Receptors Within the Regional Area of the Project

Receptor ID	Receptor Type	UTM Coordinates (E/N), m	Elevation, Ft (amsl)
Res1	Residential	663279, 3731200	547
Res2	Residential	671277, 3731139	608
Res3	Residential	662726, 3731944	531
Res4	Residential	660412, 3729285	743
Wrk1	Worker	656712, 3729799	801
Wrk2	Worker	656391, 3729993	792
Wrk3	Worker	655577, 3736169	523
Wrk4	Worker (Airport)	654590, 3736110	541
Wrk5	Worker (Radio Tower)	662419, 3728213	718
Wrk6	Worker (Radio Tower)	662353, 3728203	725
Wrk7	Worker (Radio Tower)	662364, 3728143	727
Wrk8	Worker	662276, 3728405	716

All coordinates from Google Earth (center location of each receptor location).

Based on a 6-mile radius area search. The nearest school is located approximately 10 miles west of the site.

Table 4.1D-5 (15 pages)

CONSOLIDATED TABLE OF OEHHA/ARB APPROVED RISK ASSESSMENT HEALTH VALUES*

Substance	Chemical Abstract Number	Noncancer Effects								Cancer Risk					
		Acute Inhalation (µg/m³)	Date Value Reviewed [Added]	8-Hour Inhalation (µg/m³)	Date Value Reviewed [Added]	Chronic Inhalation (µg/m³)	Date Value Reviewed [Added]	Chronic Oral (mg/kg-d)	Date Value Reviewed [Added]	Inhalation Unit Risk (µg/m³)⁻¹	Inhalation Cancer Potency Factor (mg/kg-d)⁻¹	Date Value Reviewed [Added]	Oral Slope Factor (mg/kg-d)⁻¹	Date Value Reviewed [Added]	MWAF
ACETALDEHYDE	75-07-0	4.7E+02	12/08	3.0E+02	12/08	1.4E+02	12/08			2.7E-06	1.0E-02	4/99 [5/93]			1
ACETAMIDE	60-35-5									2.0E-05	7.0E-02	4/99			1
ACROLEIN	107-02-8	2.5E+00	12/08	7.0E-01	12/08	3.5E-01	12/08								1
ACRYLAMIDE	79-06-1									1.3E-03	4.5E+00	4/99 [7/90]			1
ACRYLIC ACID	79-10-7	6.0E+03	4/99												1
ACRYLONITRILE	107-13-1					5.0E+00	12/01			2.9E-04	1.0E+00	4/99 [1/91]			1
ALLYL CHLORIDE	107-05-1									6.0E-06	2.1E-02	4/99			1
2-AMINOANTHRAQUINONE	117-79-3									9.4E-06	3.3E-02	4/99			1
AMMONIA	7664-41-7	3.2E+03	4/99			2.0E+02	2/00								1
ANILINE	62-53-3									1.6E-06	5.7E-03	4/99			1
ARSENIC AND COMPOUNDS (INORGANIC) TAC	7440-38-2 1016 [1015]	2.0E-01	12/08	1.5E-02	12/08	1.5E-02	12/08	3.5E-06	12/08	3.3E-03 TAC	1.2E+01	7/90	1.5E+00	10/00	1
ARSINE	7784-42-1	2.0E-01	12/08	1.5E-02	12/08	1.5E-02	12/08								1
ASBESTOS TAC ¤	1332-21-4									1.9E-04 TAC ¤	2.2E+02	3/86			333.33
BENZENE TAC	71-43-2	1.3E+03	4/99			6.0E+01	2/00			2.9E-05 TAC	1.0E-01	1/85			1
BENZIDINE (AND ITS SALTS) *values also apply to:*	92-87-5									1.4E-01	5.0E+02	4/99 [1/91]			1
Benzidine based dyes	*1020*									*1.4E-01*	*5.0E+02*	*4/99 [1/91]*			*1*
Direct Black 38	*1937-37-7*									*1.4E-01*	*5.0E+02*	*4/99 [1/91]*			*1*
Direct Blue 6	*2602-46-2*									*1.4E-01*	*5.0E+02*	*4/99 [1/91]*			*1*
Direct Brown 95 (technical grade)	*16071-86-6*									*1.4E-01*	*5.0E+02*	*4/99 [1/91]*			*1*
BENZYL CHLORIDE	100-44-7	2.4E+02	4/99							4.9E-05	1.7E-01	4/99			1
BERYLLIUM AND COMPOUNDS	7440-41-7 [1021]					7.0E-03	12/01	2.0E-03	12/01	2.4E-03	8.4E+00	4/99 [7/90]			1
BIS(2-CHLOROETHYL)ETHER (Dichloroethyl ether)	111-44-4									7.1E-04	2.5E+00	4/99			1
BIS(CHLOROMETHYL)ETHER	542-88-1									1.3E-02	4.6E+01	4/99 [1/91]			1
BROMINE AND COMPOUNDS	7726-95-6 [1040]														1
POTASSIUM BROMATE	7758-01-2									1.4E-04	4.9E-01	4/99 [10/93]			1

Table last updated: May 3, 2012

Table 1
CONSOLIDATED TABLE OF OEHHA/ARB APPROVED RISK ASSESSMENT HEALTH VALUES*

Substance	Chemical Abstract Number▼	Noncancer Effects								Cancer Risk					
		Acute Inhalation (µg/m³)	Date Value Reviewed [Added]◆	8-Hour Inhalation (µg/m³)	Date Value Reviewed [Added]◆	Chronic Inhalation (µg/m³)	Date Value Reviewed [Added]◆	Chronic Oral (mg/kg-d)	Date Value Reviewed [Added]◆	Inhalation Unit Risk (µg/m³)⁻¹*	Inhalation Cancer Potency Factor (mg/kg-d)⁻¹*	Date Value Reviewed [Added]◆	Oral Slope Factor (mg/kg-d)⁻¹	Date Value Reviewed [Added]◆	MWAF✣
1,3-BUTADIENE TAC	106-99-0					2.0E+01	1/01			1.7E-04 TAC	6.0E-01	7/92			1
CADMIUM AND COMPOUNDS TAC	7440-43-9 [1045]					2.0E-02	1/01	5.0E-04	10/00	4.2E-03 TAC	1.5E+01	1/87			1
CARBON DISULFIDE	75-15-0	6.2E+03	4/99			8.0E+02	5/02								1
CARBON MONOXIDE	630-08-0	2.3E+04	4/99												1
CARBON TETRACHLORIDE TAC (Tetrachloromethane)	56-23-5	1.9E+03	4/99			4.0E+01	1/01			4.2E-05 TAC	1.5E-01	9/87			1
CHLORINATED PARAFFINS	108171-26-2									2.5E-05	8.9E-02	4/99			1
CHLORINE	7782-50-5	2.1E+02	4/99			2.0E-01	2/00								1
CHLORINE DIOXIDE	10049-04-4					6.0E-01	1/01								1
4-CHLORO-O-PHENYLENEDIAMINE	95-83-0									4.6E-06	1.6E-02	4/99			1
CHLOROBENZENE	108-90-7					1.0E+03	1/01								1
CHLOROFORM TAC	67-66-3	1.5E+02	4/99			3.0E+02	4/00			5.3E-06 TAC	1.9E-02	12/90			1
Chlorophenols	*1060*														*1*
PENTACHLOROPHENOL	87-86-5									5.1E-06	1.8E-02	4/99			1
2,4,6-TRICHLOROPHENOL	88-06-2									2.0E-05	7.0E-02	4/99 [1/91]			1
CHLOROPICRIN	76-06-2	2.9E+01	4/99			4.0E-01	12/01								1
p-CHLORO-o-TOLUIDINE	95-69-2									7.7E-05	2.7E-01	4/99			1
CHROMIUM 6+ TAC *values also apply to:*	18540-29-9					2.0E-01	1/01	2.0E-02	10/00	1.5E-01 TAC	5.1E+02	1/86	Ø		1
Barium chromate	*10294-40-3*					*2.0E-01*	*1/01*	*2.0E-02*	*10/00*	*1.5E-01 TAC*	*5.1E+02*	*1/86*	Ø		*0.2053*
Calcium chromate	*13765-19-0*					*2.0E-01*	*1/01*	*2.0E-02*	*10/00*	*1.5E-01 TAC*	*5.1E+02*	*1/86*	Ø		*0.3332*
Lead chromate	*7758-97-6*					*2.0E-01*	*1/01*	*2.0E-02*	*10/00*	*1.5E-01 TAC*	*5.1E+02*	*1/86*	Ø		*0.1609*
Sodium dichromate	*10588-01-9*					*2.0E-01*	*1/01*	*2.0E-02*	*10/00*	*1.5E-01 TAC*	*5.1E+02*	*1/86*	Ø		*0.397*
Strontium chromate	*7789-06-2*					*2.0E-01*	*1/01*	*2.0E-02*	*10/00*	*1.5E-01 TAC*	*5.1E+02*	*1/86*	Ø		*0.2554*
CHROMIUM TRIOXIDE (as chromic acid mist)	1333-82-0					2.0E-03	1/01	2.0E-02	10/00	1.5E-01 TAC	5.1E+02	1/86	Ø		0.52
COPPER AND COMPOUNDS	7440-50-8 [1067]	1.0E+02	4/99												1
p-CRESIDINE	120-71-8									4.3E-05	1.5E-01	4/99			1
CRESOLS (mixtures of)	1319-77-3					6.0E+02	1/01								1
m-CRESOL	108-39-4					6.0E+02	1/01								1
o-CRESOL	95-48-7					6.0E+02	1/01								1

Table last updated: May 3, 2012

Table 1
CONSOLIDATED TABLE OF OEHHA/ARB APPROVED RISK ASSESSMENT HEALTH VALUES*

Substance	Chemical Abstract Number ▼	Noncancer Effects								Cancer Risk					
		Acute Inhalation (µg/m³)	Date ◆ Value Reviewed [Added]	8-Hour Inhalation (µg/m³)	Date ◆ Value Reviewed [Added]	Chronic Inhalation (µg/m³)	Date ◆ Value Reviewed [Added]	Chronic Oral (mg/kg-d)	Date ◆ Value Reviewed [Added]	Inhalation * Unit Risk (µg/m³)⁻¹	Inhalation * Cancer Potency Factor (mg/kg-d)⁻¹	Date ◆ Value Reviewed [Added]	Oral Slope Factor (mg/kg-d)⁻¹	Date ◆ Value Reviewed [Added]	M ÷ W A F
p-CRESOL	106-44-5					6.0E+02	1/01								1
CUPFERRON	135-20-6									6.3E-05	2.2E-01	4/99			1
Cyanide Compounds (inorganic)	*57-12-5 1073*	*3.4E+02*	*4/99*			*9.0E+00*	*4/00*								*1*
HYDROGEN CYANIDE (Hydrocyanic acid)	74-90-8	3.4E+02	4/99			9.0E+00	4/00								1
2,4-DIAMINOANISOLE	615-05-4									6.6E-06	2.3E-02	4/99			1
2,4-DIAMINOTOLUENE	95-80-7									1.1E-03	4.0E+00	4/99			1
1,2-DIBROMO-3-CHLOROPROPANE (DBCP)	96-12-8									2.0E-03	7.0E+00	4/99 [1/92]			1
p-DICHLOROBENZENE	106-46-7					8.0E+02	1/01			1.1E-05	4.0E-02	4/99 [1/91]			1
3,3-DICHLOROBENZIDINE	91-94-1									3.4E-04	1.2E+00	4/99 [1/91]			1
1,1,-DICHLOROETHANE (Ethylidene dichloride)	75-34-3									1.6E-06	5.7E-03	4/99			1
1,1-DICHLOROETHYLENE ... (see Vinylidene Chloride)															
DI(2-ETHYLHEXYL)PHTHALATE (DEHP)	117-81-7									2.4E-06	8.4E-03	4/99 [1/92]	8.4E-03	10/00	1
DIESEL EXHAUST ... (see Particulate Emissions from Diesel-Fueled Engines)															
DIETHANOLAMINE	111-42-2					3.0E+00	12/01								
p-DIMETHYLAMINOAZOBENZENE	60-11-7									1.3E-03	4.6E+00	4/99			1
N,N-DIMETHYL FORMAMIDE	68-12-2					8.0E+01	1/01								1
2,4-DINITROTOLUENE	121-14-2									8.9E-05	3.1E-01	4/99			1
1,4-DIOXANE+ (1,4-Diethylene dioxide)	123-91-1	3.0E+03	4/99			3.0E+03	4/00			7.7E-06	2.7E-02	4/99 [1/91]			1
EPICHLOROHYDRIN (1-Chloro-2,3-epoxypropane)	106-89-8	1.3E+03	4/99			3.0E+00	1/01			2.3E-05	8.0E-02	4/99 [1/92]			1
1,2-EPOXYBUTANE	106-88-7					2.0E+01	1/01								1
ETHYL BENZENE	100-41-4					2.0E+03	2/00			2.5E-06	8.7E-3	11/07			1
ETHYL CHLORIDE (Chloroethane)	75-00-3					3.0E+04	4/00								1
ETHYLENE DIBROMIDE TAC (1,2-Dibromoethane)	106-93-4					8.0E-01	12/01			7.1E-05 TAC	2.5E-01	7/85			1
ETHYLENE DICHLORIDE TAC (1,2-Dichloroethane)	107-06-2					4.0E+02	1/01			2.1E-05 TAC	7.2E-02	9/85			1
ETHYLENE GLYCOL	107-21-1					4.0E+02	4/00								1
ETHYLENE GLYCOL BUTYL ETHER ... (see Glycol ethers)															

Table last updated: May 3, 2012

Table 1
CONSOLIDATED TABLE OF OEHHA/ARB APPROVED RISK ASSESSMENT HEALTH VALUES*

Substance	Chemical Abstract Number	Noncancer Effects								Cancer Risk					
		Acute Inhalation (µg/m³)	Date Value Reviewed [Added]	8-Hour Inhalation (µg/m³)	Date Value Reviewed [Added]	Chronic Inhalation (µg/m³)	Date Value Reviewed [Added]	Chronic Oral (mg/kg-d)	Date Value Reviewed [Added]	Inhalation Unit Risk (µg/m³)⁻¹	Inhalation Cancer Potency Factor (mg/kg-d)⁻¹	Date Value Reviewed [Added]	Oral Slope Factor (mg/kg-d)⁻¹	Date Value Reviewed [Added]	MWAF
ETHYLENE OXIDE TAC (1,2-Epoxyethane)	75-21-8					3.0E+01	1/01			8.8E-05 TAC	3.1E-01	11/87			1
ETHYLENE THIOUREA	96-45-7									1.3E-05	4.5E-02	4/99			1
Fluorides	1101	*2.4E+02*	*4/99*			1.3E+01	8/03	4.0E-02	8/03						*1*
HYDROGEN FLUORIDE (Hydrofluoric acid)	7664-39-3	2.4E+02	4/99			1.4E+01	8/03	4.0E-02	8/03						1
FORMALDEHYDE TAC	50-00-0	5.5E+01	12/08	9.0E+00	12/08	9.0E+00	12/08			6.0E-06 TAC	2.1E-02	3/92			1
GLUTARALDEHYDE	111-30-8					8.0E-02	1/01								1
GLYCOL ETHERS	1115														1
ETHYLENE GLYCOL BUTYL ETHER – EGBE	111-76-2	1.4E+04	4/99												1
ETHYLENE GLYCOL ETHYL ETHER – EGEE	110-80-5	3.7E+02	4/99[1/92]			7.0E+01	2/00								1
ETHYLENE GLYCOL ETHYL ETHER ACETATE – EGEEA	111-15-9	1.4E+02	4/99			3.0E+02	2/00								1
ETHYLENE GLYCOL METHYL ETHER – EGME	109-86-4	9.3E+01	4/99			6.0E+01	2/00								1
ETHYLENE GLYCOL METHYL ETHER ACETATE – EGMEA	110-49-6					9.0E+01	2/00								1
HEXACHLOROBENZENE	118-74-1									5.1E-04	1.8E+00	4/99 [1/91]			1
HEXACHLOROCYCLOHEXANES (mixed or technical grade)	608-73-1									1.1E-03	4.0E+00	4/99 [1/91]	4.0E+00	10/00 [1/92]	1
alpha-HEXACHLOROCYCLOHEXANE	319-84-6									1.1E-03	4.0E+00	4/99 [1/91]	4.0E+00	10/00 [1/92]	1
beta-HEXACHLOROCYCLOHEXANE	319-85-7									1.1E-03	4.0E+00	4/99 [1/91]	4.0E+00	10/00 [1/92]	1
gamma-HEXACHLOROCYCLOHEXANE (Lindane)	58-89-9									3.1E-04	1.1E+00	4/99	1.1E+00	10/00	1
n-HEXANE	110-54-3					7.0E+03	4/00								1
HYDRAZINE	302-01-2					2.0E-01	1/01			4.9E-03	1.7E+01	4/99 [7/90]			1
HYDROCHLORIC ACID (Hydrogen chloride)	7647-01-0	2.1E+03	4/99			9.0E+00	2/00								1
HYDROGEN BROMIDE ... (see Bromine & Compounds)															
HYDROGEN CYANIDE ... (see Cyanide & Compounds)															
HYDROGEN FLUORIDE ... (see Fluorides & Compounds)															

Table last updated: May 3, 2012

Table 1
CONSOLIDATED TABLE OF OEHHA/ARB APPROVED RISK ASSESSMENT HEALTH VALUES*

Substance	Chemical Abstract Number	Noncancer Effects								Cancer Risk					
		Acute Inhalation (µg/m³)	Date Value Reviewed [Added]	8-Hour Inhalation (µg/m³)	Date Value Reviewed [Added]	Chronic Inhalation (µg/m³)	Date Value Reviewed [Added]	Chronic Oral (mg/kg-d)	Date Value Reviewed [Added]	Inhalation Unit Risk (µg/m³)⁻¹	Inhalation Cancer Potency Factor (mg/kg-d)⁻¹	Date Value Reviewed [Added]	Oral Slope Factor (mg/kg-d)⁻¹	Date Value Reviewed [Added]	MWAF
HYDROGEN SELENIDE ... (see Selenium & Compounds)															
HYDROGEN SULFIDE	7783-06-4	4.2E+01	4/99[7/90]			1.0E+01	4/00								1
ISOPHORONE	78-59-1					2.0E+03	12/01								
ISOPROPYL ALCOHOL (Isopropanol)	67-63-0	3.2E+03	4/99			7.0E+03	2/00								1
LEAD AND COMPOUNDS TAC ♫* (inorganic) *values also apply to:*	7439-92-1 1128 [1130]									1.2E-05 TAC	4.2E-02	4/97	8.5E-03	10/00	1
Lead acetate	*301-04-2*									*1.2E-05 TAC*	*4.2E-02*	*4/97*	*8.5E-03*	*10/00*	*0.637*
Lead phosphate	*7446-27-7*									*1.2E-05 TAC*	*4.2E-02*	*4/97*	*8.5E-03*	*10/00*	*0.7659*
Lead subacetate	*1335-32-6*									*1.2E-05 TAC*	*4.2E-02*	*4/97*	*8.5E-03*	*10/00*	*0.7696*
LINDANE ... (see gamma-Hexachlorocyclohexane)															
MALEIC ANHYDRIDE	108-31-6					7.0E-01	12/01								1
MANGANESE AND COMPOUNDS	7439-96-5 [1132]			1.7E-01	12/08	9.0E-02	12/08								1
MERCURY AND COMPOUNDS (INORGANIC)	7439-97-6 [1133]	6.0E-01	12/08	6.0E-02	12/08	3.0E-02	12/08	1.6E-04	12/08						1
Mercuric chloride	*7487-94-7*	*6.0E-01*	*12/08*	*6.0E-02*	*12/08*	*3.0E-02*	*12/08*	*1.6E-04*	*12/08*						*1*
METHANOL	67-56-1	2.8E+04	4/99			4.0E+03	4/00								1
METHYL BROMIDE (Bromomethane)	74-83-9	3.9E+03	4/99			5.0E+00	2/00								1
METHYL tertiary-BUTYL ETHER	1634-04-4					8.0E+03	2/00			2.6E-07	1.8E-03	11/99			1
METHYL CHLOROFORM (1,1,1-Trichloroethane)	71-55-6	6.8E+04	4/99			1.0E+03	2/00								1
METHYL ETHYL KETONE (2-Butanone)	78-93-3	1.3E+04	4/99												1
METHYL ISOCYANATE	624-83-9					1.0E+00	12/01								1
METHYL MERCURY ... (see Mercury & Compounds)															
4,4'-METHYLENE BIS (2-CHLOROANILINE) (MOCA)	101-14-4									4.3E-04	1.5E+00	4/99			1
METHYLENE CHLORIDE TAC (Dichloromethane)	75-09-2	1.4E+04	4/99			4.0E+02	2/00			1.0E-06 TAC	3.5E-03	7/89			1
4,4'-METHYLENE DIANILINE (AND ITS DICHLORIDE)	101-77-9					2.0E+01	12/01			4.6E-04	1.6E+00	4/99	1.6E+00	10/00	1
METHYLENE DIPHENYL ISOCYANATE	101-68-8					7.0E-01	1/01								1
MICHLER'S KETONE (4,4'-Bis(dimethylamino)benzophenone)	90-94-8									2.5E-04	8.6E-01	4/99			1

Table last updated: May 3, 2012

Table 1
CONSOLIDATED TABLE OF OEHHA/ARB APPROVED RISK ASSESSMENT HEALTH VALUES*

Substance	Chemical Abstract Number ▼	Noncancer Effects								Cancer Risk					
		Acute Inhalation ($\mu g/m^3$)	Date ◆ Value Reviewed [Added]	8-Hour Inhalation ($\mu g/m^3$)	Date ◆ Value Reviewed [Added]	Chronic Inhalation ($\mu g/m^3$)	Date ◆ Value Reviewed [Added]	Chronic Oral (mg/kg-d)	Date ◆ Value Reviewed [Added]	Inhalation * Unit Risk $(\mu g/m^3)^{-1}$	Inhalation * Cancer Potency Factor $(mg/kg\text{-}d)^{-1}$	Date ◆ Value Reviewed [Added]	Oral Slope Factor $(mg/kg\text{-}d)^{-1}$	Date ◆ Value Reviewed [Added]	M ✣ W A F
N-NITROSODI-n-BUTYLAMINE	924-16-3									3.1E-03	1.1E+01	4/99 [1/92]			1
N-NITROSODI-n-PROPYLAMINE	621-64-7									2.0E-03	7.0E+00	4/99 [1/91]			1
N-NITROSODIETHYLAMINE	55-18-5									1.0E-02	3.6E+01	4/99 [1/91]			1
N-NITROSODIMETHYLAMINE	62-75-9									4.6E-03	1.6E+01	4/99 [1/91]			1
N-NITROSODIPHENYLAMINE	86-30-6									2.6E-06	9.0E-03	4/99			1
N-NITROSO-N-METHYLETHYLAMINE	10595-95-6									6.3E-03	2.2E+01	4/99 [7/90]			1
N-NITROSOMORPHOLINE	59-89-2									1.9E-03	6.7E+00	4/99 [7/92]			1
N-NITROSOPIPERIDINE	100-75-4									2.7E-03	9.4E+00	4/99 [7/92]			1
N-NITROSOPYRROLIDINE	930-55-2									6.0E-04	2.1E+00	4/99 [7/90]			1
NAPHTHALENE ... (see Polycyclic aromatic hydrocarbons)															
NICKEL AND COMPOUNDS TAC *values also apply to:*	7440-02-0 [1145]	2.0E-01	3/12	6.0E-02	3/12	1.4E-02	3/12	1.1E-02	3/12	2.6E-04 TAC	9.1E-01	8/91			1
Nickel acetate	*373-02-4*	*2.0E-01*	*3/12*	*6.0E-02*	*3/12*	*1.4E-02*	*3/12*	*1.1E-02*	*3/12*	*2.6E-04 TAC*	*9.1E-01*	*8/91*			*0.3321*
Nickel carbonate	*3333-67-3*	*2.0E-01*	*3/12*	*6.0E-02*	*3/12*	*1.4E-02*	*3/12*	*1.1E-02*	*3/12*	*2.6E-04 TAC*	*9.1E-01*	*8/91*			*0.4945*
Nickel carbonyl	*13463-39-3*	*2.0E-01*	*3/12*	*6.0E-02*	*3/12*	*1.4E-02*	*3/12*	*1.1E-02*	*3/12*	*2.6E-04 TAC*	*9.1E-01*	*8/91*			*0.3438*
Nickel hydroxide	*12054-48-7*	*2.0E-01*	*3/12*	*6.0E-02*	*3/12*	*1.4E-02*	*3/12*	*1.1E-02*	*3/12*	*2.6E-04 TAC*	*9.1E-01*	*8/91*			*0.6332*
Nickelocene	*1271-28-9*	*2.0E-01*	*3/12*	*6.0E-02*	*3/12*	*1.4E-02*	*3/12*	*1.1E-02*	*3/12*	*2.6E-04 TAC*	*9.1E-01*	*8/91*			*0.4937*
NICKEL OXIDE	1313-99-1	*2.0E-01*	*3/12*	*6.0E-02*	*3/12*	2.0E-02	3/12	*1.1E-02*	*3/12*	*2.6E-04 TAC*	*9.1E-01*	*8/91*			0.7859
Nickel refinery dust from the pyrometallurgical process	*1146*	*2.0E-01*	*3/12*	*6.0E-02*	*3/12*	*1.4E-02*	*3/12*	*1.1E-02*	*3/12*	*2.6E-04 TAC*	*9.1E-01*	*8/91*			*1*
Nickel subsulfide	*12035-72-2*	*2.0E-01*	*3/12*	*6.0E-02*	*3/12*	*1.4E-02*	*3/12*	*1.1E-02*	*3/12*	*2.6E-04 TAC*	*9.1E-01*	*8/91*			*0.2443*
NITRIC ACID	7697-37-2	8.6E+01	4/99												1
NITROGEN DIOXIDE	10102-44-0	4.7E+02	4/99[1/92]												1
p-NITROSODIPHENYLAMINE	156-10-5									6.3E-06	2.2E-02	4/99			1
OZONE	10028-15-6	1.8E+02	4/99[1/92]												1
PARTICULATE EMISSIONS FROM DIESEL-FUELED ENGINES TAC ■¶	9901					5.0E+00 TAC	8/98			3.0E-04 TAC	1.1E+00	8/98			1

Table last updated: May 3, 2012

Table 1
CONSOLIDATED TABLE OF OEHHA/ARB APPROVED RISK ASSESSMENT HEALTH VALUES*

Substance	Chemical Abstract Number ▼	Noncancer Effects								Cancer Risk					
		Acute Inhalation ($\mu g/m^3$)	Date ◆ Value Reviewed [Added]	8-Hour Inhalation ($\mu g/m^3$)	Date ◆ Value Reviewed [Added]	Chronic Inhalation ($\mu g/m^3$)	Date ◆ Value Reviewed [Added]	Chronic Oral (mg/kg-d)	Date ◆ Value Reviewed [Added]	Inhalation * Unit Risk $(\mu g/m^3)^{-1}$	Inhalation * Cancer Potency Factor $(mg/kg\text{-}d)^{-1}$	Date ◆ Value Reviewed [Added]	Oral Slope Factor $(mg/kg\text{-}d)^{-1}$	Date ◆ Value Reviewed [Added]	M ✣ W A F
PENTACHLOROPHENOL ... (see Chlorophenols)															
PERCHLOROETHYLENE TAC (Tetrachloroethylene)	127-18-4	2.0E+04	4/99			3.5E+01 TAC	10/91			5.9E-06 TAC	2.1E-02	10/91			1
PHENOL	108-95-2	5.8E+03	4/99			2.0E+02	4/00								1
PHOSGENE	75-44-5	4.0E+00	4/99												1
PHOSPHINE	7803-51-2					8.0E-01	9/02								1
PHOSPHORIC ACID	7664-38-2					7.0E+00	2/00								1
PHTHALIC ANHYDRIDE	85-44-9					2.0E+01	1/01								1
PCB (POLYCHLORINATED BIPHENYLS) (unspeciated mixture) [lowest risk] ☼*	1336-36-3									2.0E-05	7.0E-02	4/99	7.0E-02	10/00	1
PCB (POLYCHLORINATED BIPHENYLS) (unspeciated mixture) [low risk] ☼*	1336-36-3									1.1E-04	4.0E-01*		4.0E-01*		1
PCB (POLYCHLORINATED BIPHENYLS) (unspeciated mixture) [high risk] ☼*	1336-36-3									5.7E-04	2.0E+00	4/99	2.0E+00	10/00	1
PCB (POLYCHLORINATED BIPHENYLS (speciated) ϖ															
3,3',4,4'-TETRACHLOROBIPHENYL (PCB 77)	32598-13-3					4.0E-01	8/03	1.0E-04	8/03	3.8E-03	1.3E+01	8/03	1.3E+01	8/03	1
3,4,4',5-TETRACHLOROBIPHENYL (PCB 81)	70362-50-4					1.3E-01	1/11	3.3E-05	1/11	1.1E-02	3.9E+01	1/11	3.9E+01	1/11	1
2,3,3',4,4'-PENTACHLOROBIPHENYL (PCB 105)	32598-14-4					1.3E+00	1/11	3.3E-04	1/11	1.1E-03	3.9E+00	1/11	3.9E+00	1/11	1
2,3,4,4',5-PENTACHLOROBIPHENYL (PCB 114)	74472-37-0					1.3E+00	1/11	3.3E-04	1/11	1.1E-03	3.9E+00	1/11	3.9E+00	1/11	1
2,3',4,4',5-PENTACHLOROBIPHENYL (PCB 118)	31508-00-6					1.3E+00	1/11	3.3E-04	1/11	1.1E-03	3.9E+00	1/11	3.9E+00	1/11	1
2,3',4,4',5'-PENTACHLOROBIPHENYL (PCB 123)	65510-44-3					1.3E+00	1/11	3.3E-04	1/11	1.1E-03	3.9E+00	1/11	3.9E+00	1/11	1
3,3',4,4',5-PENTACHLOROBIPHENYL (PCB 126)	57465-28-8					4.0E-04	8/03	1.0E-07	8/03	3.8E+00	1.3E+04	8/03	1.3E+04	8/03	1
2,3,3',4,4',5-HEXACHLOROBIPHENYL (PCB 156)	38380-08-4					1.3E+00	1/11	3.3E-04	1/11	1.1E-03	3.9E+00	1/11	3.9E+00	1/11	1

Table last updated: May 3, 2012

Table 1
CONSOLIDATED TABLE OF OEHHA/ARB APPROVED RISK ASSESSMENT HEALTH VALUES*

Substance	Chemical Abstract Number ▼	Noncancer Effects								Cancer Risk					
		Acute Inhalation (µg/m³)	Date ◆ Value Reviewed [Added]	8-Hour Inhalation (µg/m³)	Date ◆ Value Reviewed [Added]	Chronic Inhalation (µg/m³)	Date ◆ Value Reviewed [Added]	Chronic Oral (mg/kg-d)	Date ◆ Value Reviewed [Added]	Inhalation * Unit Risk (µg/m³)⁻¹	Inhalation * Cancer Potency Factor (mg/kg-d)⁻¹	Date ◆ Value Reviewed [Added]	Oral Slope Factor (mg/kg-d)⁻¹	Date ◆ Value Reviewed [Added]	M ✣ W A F
2,3,3',4,4',5'-HEXACHLOROBIPHENYL (PCB 157)	69782-90-7					1.3E+00	1/11	3.3E-04	1/11	1.1E-03	3.9E+00	1/11	3.9E+00	1/11	1
2,3',4,4',5,5'-HEXACHLOROBIPHENYL (PCB 167)	52663-72-6					1.3E+00	1/11	3.3E-04	1/11	1.1E-03	3.9E+00	1/11	3.9E+00	1/11	1
3,3',4,4',5,5'-HEXACHLOROBIPHENYL (PCB 169)	32774-16-6					1.3E-03	1/11	3.3E-07	1/11	1.1E+00	3.9E+03	1/11	3.9E+03	1/11	1
2,3,3',4,4',5,5'-HEPTACHLOROBIPHENYL (PCB 189)	39635-31-9					1.3E+00	1/11	3.3E-04	1/11	1.1E-03	3.9E+00	1/11	3.9E+00	1/11	1
POLYCHLORINATED DIBENZO-*P*-DIOXINS (PCDD) (Treated as 2,3,7,8-TCDD for HRA) TAC ●	1085 1086					4.0E-05	2/00	1.0E-08	10/00	3.8E+01 TAC	1.3E+05	8/86	1.3E+05 TAC	8/86	1
2,3,7,8-TETRACHLORODIBENZO-*P*-DIOXIN TAC	1746-01-6					4.0E-05	2/00	1.0E-08	10/00	3.8E+01 TAC	1.3E+05	8/86	1.3E+05 TAC	8/86	1
1,2,3,7,8-PENTACHLORODIBENZO-*P*-DIOXIN	40321-76-4					4.0E-05	8/03	1.0E-08	8/03	3.8E+01	1.3E+05	8/03	1.3E+05	8/03	1
1,2,3,4,7,8-HEXACHLORODIBENZO-*P*-DIOXIN	39227-28-6					4.0E-04	2/00	1.0E-07	10/00	3.8E+00	1.3E+04	4/99	1.3E+04	10/00	1
1,2,3,6,7,8-HEXACHLORODIBENZO-*P*-DIOXIN	57653-85-7					4.0E-04	2/00	1.0E-07	10/00	3.8E+00	1.3E+04	4/99	1.3E+04	10/00	1
1,2,3,7,8,9-HEXACHLORODIBENZO-*P*-DIOXIN	19408-74-3					4.0E-04	2/00	1.0E-07	10/00	3.8E+00	1.3E+04	4/99	1.3E+04	10/00	1
1,2,3,4,6,7,8-HEPTACHLORODIBENZO-*P*-DIOXIN	35822-46-9					4.0E-03	2/00	1.0E-06	10/00	3.8E-01	1.3E+03	4/99	1.3E+03	10/00	1
1,2,3,4,6,7,8,9-OCTACHLORODIBENZO-*P*-DIOXIN	3268-87-9					1.3E-01	1/11	3.3E-05	1/11	1.1E-02	3.9E+01	1/11	3.9E+01	1/11	1
POLYCHLORINATED DIBENZOFURANS (PCDF) TAC ● (Treated as 2,3,7,8-TCDD for HRA)	1080					4.0E-05	2/00	1.0E-08	10/00	3.8E+01 TAC	1.3E+05	8/86	1.3E+05 TAC	8/86	1
2,3,7,8-TETRACHLORODIBENZOFURAN	5120-73-19					4.0E-04	2/00	1.0E-07	10/00	3.8E+00	1.3E+04	4/99	1.3E+04	10/00	1
1,2,3,7,8-PENTACHLORODIBENZOFURAN	57117-41-6					1.3E-03	1/11	3.3E-07	1/11	1.1E+00	3.9E +03	1/11	3.9E +03	1/11	1

Table last updated: May 3, 2012

Table 1
CONSOLIDATED TABLE OF OEHHA/ARB APPROVED RISK ASSESSMENT HEALTH VALUES*

Substance	Chemical Abstract Number ▼	Noncancer Effects								Cancer Risk					
		Acute Inhalation (µg/m³)	Date ◆ Value Reviewed [Added]	8-Hour Inhalation (µg/m³)	Date ◆ Value Reviewed [Added]	Chronic Inhalation (µg/m³)	Date ◆ Value Reviewed [Added]	Chronic Oral (mg/kg-d)	Date ◆ Value Reviewed [Added]	Inhalation * Unit Risk (µg/m³)⁻¹	Inhalation * Cancer Potency Factor (mg/kg-d)⁻¹	Date ◆ Value Reviewed [Added]	Oral Slope Factor (mg/kg-d)⁻¹	Date ◆ Value Reviewed [Added]	M ✣ W A F
2,3,4,7,8-PENTACHLORODIBENZOFURAN	57117-31-4					1.3E-04	1/11	3.3E-08	1/11	1.1E+01	3.9E +04	1/11	3.9E +04	1/11	1
1,2,3,4,7,8-HEXACHLORODIBENZOFURAN	70648-26-9					4.0E-04	2/00	1.0E-07	10/00	3.8E+00	1.3E+04	4/99	1.3E+04	10/00	1
1,2,3,6,7,8-HEXACHLORODIBENZOFURAN	57117-44-9					4.0E-04	2/00	1.0E-07	10/00	3.8E+00	1.3E+04	4/99	1.3E+04	10/00	1
1,2,3,7,8,9-HEXACHLORODIBENZOFURAN	72918-21-9					4.0E-04	2/00	1.0E-07	10/00	3.8E+00	1.3E+04	4/99	1.3E+04	10/00	1
2,3,4,6,7,8-HEXACHLORODIBENZOFURAN	60851-34-5					4.0E-04	2/00	1.0E-07	10/00	3.8E+00	1.3E+04	4/99	1.3E+04	10/00	1
1,2,3,4,6,7,8-HEPTACHLORODIBENZOFURAN	67562-39-4					4.0E-03	2/00	1.0E-06	10/00	3.8E-01	1.3E+03	4/99	1.3E+03	10/00	1
1,2,3,4,7,8,9-HEPTACHLORODIBENZOFURAN	55673-89-7					4.0E-03	2/00	1.0E-06	10/00	3.8E-01	1.3E+03	4/99	1.3E+03	10/00	1
1,2,3,4,6,7,8,9-OCTACHLORODIBENZOFURAN	39001-02-0					1.3E-01	1/11	3.3E-05	1/11	1.1E-02	3.9E +01	1/11	3.9E +01	1/11	1
POLYCYCLIC AROMATIC HYDROCARBON (PAH) Φ [Treated as B(a)P for HRA] ✣	1150 1151									1.1E-03	3.9E+00	4/99 [4/94]	1.2E+01	10/00 [4/94]	1
BENZ(A)ANTHRACENE ✣	56-55-3									1.1E-04	3.9E-01	4/99 [4/94]	1.2E+00	10/00 [4/94]	1
BENZO(A)PYRENE ✣	50-32-8									1.1E-03	3.9E+00	4/99 [4/94]	1.2E+01	10/00 [4/94]	1
BENZO(B)FLUORANTHENE ✣	205-99-2									1.1E-04	3.9E-01	4/99 [4/94]	1.2E+00	10/00 [4/94]	1
BENZO(J)FLUORANTHENE ✣	205-82-3									1.1E-04	3.9E-01	4/99 [4/94]	1.2E+00	10/00 [4/94]	1
BENZO(K)FLUORANTHENE ✣	207-08-9									1.1E-04	3.9E-01	4/99 [4/94]	1.2E+00	10/00 [4/94]	1
CHRYSENE ✣	218-01-9									1.1E-05	3.9E-02	4/99 [4/94]	1.2E-01	10/00 [4/94]	1
DIBENZ(A,H)ACRIDINE ✣	226-36-8									1.1E-04	3.9E-01	4/99 [4/94]	1.2E+00	10/00 [4/94]	1
DIBENZ(A,H)ANTHRACENE ✣	53-70-3									1.2E-03	4.1E+00	4/99 [4/94]	4.1E+00	10/00 [4/94]	1
DIBENZ(A,J)ACRIDINE ✣	224-42-0									1.1E-04	3.9E-01	4/99 [4/94]	1.2E+00	10/00 [4/94]	1
DIBENZO(A,E)PYRENE ✣	192-65-4									1.1E-03	3.9E+00	4/99 [4/94]	1.2E+01	10/00 [4/94]	1
DIBENZO(A,H)PYRENE ✣	189-64-0									1.1E-02	3.9E+01	4/99 [4/94]	1.2E+02	10/00 [4/94]	1

Table last updated: May 3, 2012

Table 1
CONSOLIDATED TABLE OF OEHHA/ARB APPROVED RISK ASSESSMENT HEALTH VALUES*

Substance	Chemical Abstract Number	Noncancer Effects								Cancer Risk					
		Acute Inhalation (µg/m³)	Date Value Reviewed [Added]	8-Hour Inhalation (µg/m³)	Date Value Reviewed [Added]	Chronic Inhalation (µg/m³)	Date Value Reviewed [Added]	Chronic Oral (mg/kg-d)	Date Value Reviewed [Added]	Inhalation Unit Risk (µg/m³)⁻¹	Inhalation Cancer Potency Factor (mg/kg-d)⁻¹	Date Value Reviewed [Added]	Oral Slope Factor (mg/kg-d)⁻¹	Date Value Reviewed [Added]	MWAF
DIBENZO(A,I)PYRENE	189-55-9									1.1E-02	3.9E+01	4/99 [4/94]	1.2E+02	10/00 [4/94]	1
DIBENZO(A,L)PYRENE	191-30-0									1.1E-02	3.9E+01	4/99 [4/94]	1.2E+02	10/00 [4/94]	1
7H-DIBENZO(C,G)CARBAZOLE	194-59-2									1.1E-03	3.9E+00	4/99 [4/94]	1.2E+01	10/00 [4/94]	1
7,12-DIMETHYLBENZ(A)ANTHRACENE	57-97-6									7.1E-02	2.5E+02	4/99 [4/94]	2.5E+02	10/00 [4/94]	1
1,6-DINITROPYRENE	42397-64-8									1.1E-02	3.9E+01	4/99 [4/94]	1.2E+02	10/00 [4/94]	1
1,8-DINITROPYRENE	42397-65-9									1.1E-03	3.9E+00	4/99 [4/94]	1.2E+01	10/00 [4/94]	1
INDENO(1,2,3-C,D)PYRENE	193-39-5									1.1E-04	3.9E-01	4/99 [4/94]	1.2E+00	10/00 [4/94]	1
3-METHYLCHOLANTHRENE	56-49-5									6.3E-03	2.2E+01	4/99 [4/94]	2.2E+01	10/00 [4/94]	1
5-METHYLCHRYSENE	3697-24-3									1.1E-03	3.9E+00	4/99 [4/94]	1.2E+01	10/00 [4/94]	1
NAPHTHALENE	91-20-3					9.0E+00	4/00			3.4E-05	1.2E-01	8/04			1
5-NITROACENAPHTHENE	602-87-9									3.7E-05	1.3E-01	4/99 [4/94]	1.3E-01	10/00 [4/94]	1
6-NITROCHRYSENE	7496-02-8									1.1E-02	3.9E+01	4/99 [4/94]	1.2E+02	10/00 [4/94]	1
2-NITROFLUORENE	607-57-8									1.1E-05	3.9E-02	4/99 [4/94]	1.2E-01	10/00 [4/94]	1
1-NITROPYRENE	5522-43-0									1.1E-04	3.9E-01	4/99 [4/94]	1.2E+00	10/00 [4/94]	1
4-NITROPYRENE	57835-92-4									1.1E-04	3.9E-01	4/99 [4/94]	1.2E+00	10/00 [4/94]	1
POTASSIUM BROMATE.... ... (see Bromine & Compounds)															
1,3-PROPANE SULTONE	1120-71-4									6.9E-04	2.4E+00	4/99			1
PROPYLENE (PROPENE)	115-07-1					3.0E+03	4/00								1
PROPYLENE GLYCOL MONOMETHYL ETHER	107-98-2					7.0E+03	2/00								1
PROPYLENE OXIDE	75-56-9	3.1E+03	4/99			3.0E+01	2/00			3.7E-06	1.3E-02	4/99 [7/90]			1
SELENIUM AND COMPOUNDS	7782-49-2 [1170]					2.0E+01	12/01								1
HYDROGEN SELENIDE	7783-07-5	5.0E+00	4/99												1

Table last updated: May 3, 2012

Table 1
CONSOLIDATED TABLE OF OEHHA/ARB APPROVED RISK ASSESSMENT HEALTH VALUES*

Substance	Chemical Abstract Number▼	Noncancer Effects								Cancer Risk					
		Acute Inhalation (µg/m³)	Date Value Reviewed [Added]◆	8-Hour Inhalation (µg/m³)	Date Value Reviewed [Added]◆	Chronic Inhalation (µg/m³)	Date Value Reviewed [Added]◆	Chronic Oral (mg/kg-d)	Date Value Reviewed [Added]◆	Inhalation Unit Risk (µg/m³)⁻¹*	Inhalation Cancer Potency Factor (mg/kg-d)⁻¹*	Date Value Reviewed [Added]◆	Oral Slope Factor (mg/kg-d)⁻¹	Date Value Reviewed [Added]◆	MWAF✣
Selenium sulfide	*7446-34-6*					*2.0E+01*	*12/01*								*1*
SILICA [CRYSTALLINE, RESPIRABLE]	1175					3.0E+00	2/05								1
SODIUM HYDROXIDE	1310-73-2	8.0E+00	4/99												1
STYRENE	100-42-5	2.1E+04	4/99			9.0E+02	4/00								1
SULFATES	9960	1.2E+02	4/99												1
SULFUR DIOXIDE	7446-09-5	6.6E+02	4/99[1/92]												1
SULFURIC ACID AND OLEUM	9961	1.2E+02	4/99			*1.0E+00*	*12/01*								1
SULFURIC ACID	*7664-93-9*	*1.2E+02*	*4/99*			1.0E+00	12/01								*1*
SULFUR TRIOXIDE	*7446-71-9*	*1.2E+02*	*4/99*			*1.0E+00*	*12/01*								*1*
OLEUM	*8014-95-7*	*1.2E+02*	*4/99*			*1.0E+00*	*12/01*								*1*
1,1,2,2-TETRACHLOROETHANE	79-34-5									5.8E-05	2.0E-01	4/99			1
TETRACHLOROPHENOLS ... (see Chlorophenols)															
2,4,5-TRICHLOROPHENOL ... (see Chlorophenols)															
2,4,6-TRICHLOROPHENOL ... (see Chlorophenols)															
THIOACETAMIDE	62-55-5									1.7E-03	6.1E+00	4/99			1
TOLUENE	108-88-3	3.7E+04	4/99			3.0E+02	4/00								1
Toluene diisocyantates	*26471-62-5*					*7.0E-02*	*1/01*			*1.1E-05*	*3.9E-02*	*4/99*			*1*
TOLUENE-2,4-DIISOCYANATE	584-84-9					7.0E-02	1/01			1.1E-05	3.9E-02	4/99			1
TOLUENE-2,6-DIISOCYANATE	91-08-7					7.0E-02	1/01			1.1E-05	3.9E-02	4/99			1
1,1,2-TRICHLOROETHANE (Vinyl trichloride)	79-00-5									1.6E-05	5.7E-02	4/99			1
TRICHLOROETHYLENE[TAC]	79-01-6					6.0E+02	4/00			2.0E-06 TAC	7.0E-03	10/90			1
TRIETHYLAMINE	121-44-8	2.8E+03	4/99			2.0E+02	9/02								1
URETHANE (Ethyl carbamate)	51-79-6									2.9E-04	1.0E+00	4/99 [7/90]			1
Vanadium Compounds	*N/A*														*1*
Vanadium (fume or dust)	*7440-62-2*	*3.0E+01*	*4/99*												*1*
VANADIUM PENTOXIDE	1314-62-1	3.0E+01	4/99												1
VINYL ACETATE	108-05-4					2.0E+02	12/01								1
VINYL CHLORIDE[TAC] (Chloroethylene)	75-01-4	1.8E+05	4/99							7.8E-05 TAC	2.7E-01	12/90			1
VINYLIDENE CHLORIDE (1,1-Dichloroethylene)	75-35-4					7.0E+01	1/01								1

Table last updated: May 3, 2012

Table 1
CONSOLIDATED TABLE OF OEHHA/ARB APPROVED RISK ASSESSMENT HEALTH VALUES*

Substance	Chemical Abstract Number ▼	Noncancer Effects								Cancer Risk					
		Acute Inhalation ($\mu g/m^3$)	Date ◆ Value Reviewed [Added]	8-Hour Inhalation ($\mu g/m^3$)	Date ◆ Value Reviewed [Added]	Chronic Inhalation ($\mu g/m^3$)	Date ◆ Value Reviewed [Added]	Chronic Oral (mg/kg-d)	Date ◆ Value Reviewed [Added]	Inhalation * Unit Risk $(\mu g/m^3)^{-1}$	Inhalation * Cancer Potency Factor $(mg/kg\text{-}d)^{-1}$	Date ◆ Value Reviewed [Added]	Oral Slope Factor $(mg/kg\text{-}d)^{-1}$	Date ◆ Value Reviewed [Added]	M ✣ W A F
XYLENES (mixed isomers)	1330-20-7	2.2E+04	4/99			7.0E+02	4/00								1
m-XYLENE	108-38-3	2.2E+04	4/99			7.0E+02	4/00								1
o-XYLENE	95-47-6	2.2E+04	4/99			7.0E+02	4/00								1
p-XYLENE	106-42-3	2.2E+04	4/99			7.0E+02	4/00								1

Table 1
CONSOLIDATED TABLE OF OEHHA/ARB APPROVED RISK ASSESSMENT HEALTH VALUES*

Purpose: The purpose of this reference table is to provide a quick list of all health values that have been approved by the Office of Environmental Health Hazard Assessment (OEHHA) and the Air Resources Board (ARB) for use in facility health risk assessments conducted for the AB 2588 Air Toxics Hot Spots Program. The OEHHA has developed and adopted new risk assessment guidelines that update and replace the California Air Pollution Control Officers Association's (CAPCOA) *Air Toxics "Hot Spots" Program Revised 1992 Risk Assessment Guidelines, October 1993.* The OEHHA has adopted four technical support documents for these guidelines, which can be found on their website (http://www.oehha.ca.gov/air/hot_spots/index.html). This table lists the OEHHA adopted inhalation and oral cancer slope factors, noncancer acute Reference Exposure Levels (RELs), and inhalation and oral noncancer chronic RELs. OEHHA is still in the process of adopting new health values. Therefore, new health values will periodically be added to, or deleted from, this table. Users of this table are advised to monitor the OEHHA website (*www.oehha.ca.gov*) for any updates to the health values.

May 2008 update: The Air Resources Board adopted amendments to the AB 2588 Air Toxics "Hot Spots" Emission Inventory Criteria and Guidelines Regulation (Title 17, California Code of Regulations, Section 93300.5) on November 16, 2006. The amendments became effective on September 26, 2007, after approval from the Office of Administrative Law. Under the new amendments, the substances previously listed in Appendix A-I *(Substances For Which Emissions Must Be Quantified)* and Appendix F (*Criteria For Inputs For Risk Assessment Using Screening Air Dispersion Modeling*) of the ARB's *Air Toxics "Hot Spots" Emission Inventory Criteria and Guidelines (EICG) (July 1997)* have been removed from this table.

✲ Substances written in *italics* do not have explicit OEHHA approved health values, but are included in this table to clarify applicability of OEHHA adopted heath effects values to individual or grouped substances listed in the *Air Toxics "Hot Spots" Emission Inventory Criteria and Guidelines*, Appendix A-I list of *"Substances For Which Emissions Must Be Quantified"*.

▼ Chemical Abstract Service Number (CAS): For chemical groupings and mixtures where a CAS number is not applicable, the 4-digit code used in the *Air Toxics "Hot Spots" Emission Inventory Criteria and Guidelines (EICG) Report* is listed. The 4-digit codes enclosed in brackets [ ] are codes that have been phased out, but may still appear on previously reported Hot Spots emissions. For information on the origin and use of the 4-digit code, see the EICG report.

◆ Date Value Reviewed [Added]: These columns list the date that the health value was last reviewed by OEHHA and the Scientific Review Panel, and/or approved for use in the AB 2588 Air Toxics Hot Spots Program. If the health value is unchanged since it was first approved for use in the Hot Spots Program, then the date that the value was first approved for use by CAPCOA is listed within the brackets [ ].

- April 1999 is listed for the cancer potency values and noncancer acute RELs, which have been adopted by the OEHHA as part of the AB 2588 Hot Spot Risk Assessment Guidelines.
- February 2000, April 2000, January 2001, and December 2001 are listed for the first set of 22, the second set of 16, the third set of 22, and the fourth set of 12 noncancer chronic RELs, respectively. The chronic REL for carbon disulfide was adopted in May 2002. Chronic RELs for phosphine and triethylamine were adopted in September 2002. Chronic RELs for fluorides including hydrogen fluoride were adopted August 2003. Chronic REL for silica [crystalline respirable] was adopted February 2005.
- October 2000 is listed for the oral chronic RELs and oral cancer slope factors.
- Cancer potency value adopted for naphthalene in August 2004. The inhalation and oral cancer potency values for ethyl benzene were adopted in November 2007.
- For the substances identified as Toxic Air Contaminants, the Air Resources Board hearing date is listed. The dates for acetaldehyde, benzo[a]pyrene, and methyl tertiary-butyl ether represent the dates the values were approved by the Scientific Review Panel.
- On December 19, 2008, OEHHA adopted new acute, 8-hour, and chronic RELs for acetaldehyde, acrolein, arsenic, formaldehyde, manganese, and mercury. The most current health values can be found at: http://www.oehha.ca.gov/air/allrels.html. Note that the 8-hour RELs are not included in the HARP program. These health factors will be added after OEHHA approves the Guidelines Manual (Part V).

  Note: 1. OEHHA presents the new oral RELs in micrograms (µg/kg-d) and we converted them to milligrams (mg/kg-d) for consistency.

  2. Acute RELs with longer averaging periods (i.e., 4-hour, 6-hour, and 7-hour) will now use the 1-hour averaging period. The affected chemicals are: arsenic & inorganic arsenic compounds, benzene, carbon disulfide, carbon tetrachloride, chloroform, ethylene glycol monoethyl ether, ethylene glycol monoethyl ether acetate, and ethylene glycol monomethyl ether.

  3. At OEHHA's direction, the chronic oral REL for arsenic does not apply to arsine because arsine is a gas and not particle associated.
- January 2011 is listed to reflect OEHHA's adoption of the World Health Organization's 2005 Toxicity Equivalency Factors for polychlorinated dibenzo-p-dioxins (PCDDs), dibenzofurans (PCDFs), and dioxin-like polychlorinated biphenyls (PCBs). See Appendix C of OEHHA's *Air Toxics Hot Spots Program Technical Support Document for Cancer Potencies* at http://www.oehha.ca.gov/air/hot_spots/pdf/AppCdioxinTEFs013111.pdf for more information.
- On March 23, 2012, OEHHA adopted revised acute, 8-hour and chronic RELs for nickel and nickel compounds. The values of the RELs are listed in the table at: http://www.oehha.ca.gov/air/chronic_rels/032312CREL.html.

* Inhalation cancer potency factor: The "unit risk factor" has been replaced in the new risk assessment algorithms by a factor called the "inhalation cancer potency factor". Inhalation cancer potency factors are expressed as units of inverse dose [i.e., $(mg/kg\text{-}day)^{-1}$]. They were derived from unit risk factors [units = $(ug/m^3)^{-1}$] by assuming that a receptor weighs 70 kilograms and breathes 20 cubic meters of air per day. The inhalation potency factor is used to calculate a potential inhalation cancer risk using the new risk assessment algorithms defined in the OEHHA, *Air Toxics Hot Spots Program; Part IV; Technical Support Document for Exposure Assessment and Stochastic Analysis (September 2000).*

Table 1
CONSOLIDATED TABLE OF OEHHA/ARB APPROVED RISK ASSESSMENT HEALTH VALUES*

♣	Molecular Weight Adjustment Factor: Molecular weight adjustment factors (MWAF) are only to be used when a toxic metal has a cancer potency factor. For most of the Hot Spots toxic metals, the OEHHA cancer potency factor applies to the weight of the toxic metal atom contained in the overall compound. Some of the Hot Spots compounds contain various elements along with the toxic metal atom (e.g., "Nickel hydroxide", CAS number 12054-48-7, has a formula of H_2NiO_2). Therefore, an adjustment to the reported pounds of the overall compound is needed before applying the OEHHA cancer potency factor for "Nickel and compounds" to such a compound. This ensures that the cancer potency factor is applied only to the fraction of the overall weight of the emissions that are associated with health effects of the metal. In other cases, the Hot Spots metals are already reported as the metal atom equivalent (e.g., CAS 7440-02-0, "Nickel"), and these cases do not use any further molecular weight adjustment. (Refer to Note [7] in Appendix A, List of Substances in the EICG Report for further information on how the emissions of various Hot Spots metal compounds are reported.) The appropriate molecular weight adjustment factors (MWAF) to be used along with the OEHHA cancer potency factors for Hot Spots metals can be found in the MWAF column of this table. So, for example, assume 100 pounds of "Nickel hydroxide" emissions are reported under CAS number 12054-48-7. To get the Nickel atom equivalent of these emissions, multiply by the listed MWAF (0.6332) for Nickel hydroxide: • 100 pounds x 0.6332 = 63.32 pounds of Nickel atom equivalent *This step should be completed prior to applying the OEHHA cancer potency factor for "Nickel and compounds" in a calculation for a prioritization score or risk assessment calculation.* (For more information see Chapter 8 of OEHHA's document, *The Air Toxics Hot Spots Program Guidance Manual for Preparation of Health Risk Assessments.*) Note: The value listed in the MWAF column for Asbestos is not a molecular weight adjustment. This is a conversion factor for adjusting mass to fibers or structures. See Appendix C of OEHHA's document *The Air Toxics Hot Spots Program Guidance Manual for Preparation of Health Risk Assessments* for more information on Asbestos, or see the EICG report for reporting guidance. Also see the Asbestos footnote (designated by the symbol ⌑)
N/A	Not Applicable
TAC	Toxic Air Contaminant: The Air Resources Board has identified this substance as a Toxic Air Contaminant.
⌑	Asbestos: The units for the Inhalation Cancer Potency factor for asbestos are $(100 \text{ PCM fibers/m}^3)^{-1}$. A conversion factor of 100 fibers/0.003 µg can be multiplied by a receptor concentration of asbestos expressed in $\mu g/m^3$. Unless other information necessary to estimate the concentration (fibers/m^3) of asbestos at receptors of interest is available. A unit risk factor of $1.9 \text{ E } 10^{-4}$ $(\mu g/m^3)^{-1}$ and an inhalation cancer potency factor of $2.2 \text{ E } 10^{+2}$ $(\text{mg/kg BW * day})^{-1}$ are available. For more information on asbestos quantity conversion factors, see Appendix C of OEHHA's *The Air Toxics Hot Spots Program Risk Assessment Guidelines; Part II; Technical Support Document for Describing Available Cancer Potency Factors*, and Appendix C of OEHHA's document *The Air Toxics Hot Spots Program Guidance Manual for Preparation of Health Risk Assessments.*
∅	Hexavalent Chromium: The oral cancer slope factor for chromium 6+ and compounds has been withdrawn by the Office of Environmental Health Hazard Assessment.
♫	Inorganic Lead: Inorganic Lead was identified by the Air Resources Board as a Toxic Air Contaminant in April 1997. Since information on noncancer health effects show no identified threshold, no Reference Exposure Level has been developed. The document, *Risk Management Guidelines for New, Modified, and Existing Sources of Lead, March 2001*, has been developed by ARB and OEHHA staff for assessing noncancer health impacts from sources of lead. See Appendix F of OEHHA's document *The Air Toxics Hot Spots Program Guidance Manual for Preparation of Health Risk Assessments* for an overview of how to evaluate noncancer impacts from exposure to lead using these risk management guidelines.
Φ	Polycyclic Aromatic Hydrocarbons (PAHs): These substances are PAH or PAH-derivatives that have OEHHA-developed Potency Equivalency Factors (PEFs) which were approved by the Scientific Review Panel in April 1994 (see ARB document entitled *Benzo[a]pyrene as a Toxic Air Contaminant*). PAH inhalation slope factors listed here have been adjusted by the PEFs. See OEHHA's Technical Support Document: Methodologies for Derivation, Listing of Available Values, and Adjustments to Allow for Early Life Exposures (2009) for more information about the scheme. Section 8.2.3 and Appendix G of OEHHA's *The Air Toxics Hot Spots Program Guidance Manual for Preparation of Health Risk Assessments* (2003) also contain information on PAHs. The two numbers (i.e., 1150 and 1151) in the column listing Chemical Abstracts Numbers are used for reporting and risk assessment purposes. Be sure to input emissions under the proper code when using the HARP software. ID code 1150 has no health values associated with it in the HARP software; therefore, no health impacts will be calculated when using ID 1150. See the Emissions Inventory Criteria and Guidelines for more information on reporting emissions.
☼	Polychlorinated Biphenyls: (unspeciated mixtures) Lowest Risk: For use in cases where congeners with more than four chlorines comprise less than one-half percent of total polychlorinated biphenyls. High Risk: For use in cases where congeners with more than four chlorines do not comprise less than one-half percent of total polychlorinated biphenyls. Low Risk: This number would not ordinarily be used in the Hot Spots program. Chronic Oral: The chronic oral value is U.S. EPA's 1996 oral Reference Dose for Aroclor-1254.
ϖ	Polychlorinated Biphenyls (speciated): OEHHA has adopted the World Health Organization 2005 (WHO-2005) Toxicity Equivalency Factors (TEFs) scheme for evaluating the cancer risk due to exposure to samples containing mixtures of polychlorinated dibenzo-p-dioxins (PCDD) and polychlorinated dibenzofurans (PCDF) and determining cancer risks for a number of dioxin-like PCBs. See Appendix C of OEHHA's Technical Support Document: Methodologies for Derivation, Listing of Available Values, and Adjustments to Allow for Early Life Exposures (2009) for more information about the scheme.
•	Polychlorinated Dibenzo-*p*-dioxins and Polychlorinated Dibenzofurans (also referred to as chlorinated dioxins and dibenzofurans): OEHHA has adopted the World Health Organization 2005 (WHO-2005) Toxicity Equivalency Factors (TEFs) scheme for evaluating the cancer risk due to exposure to samples containing mixtures of polychlorinated dibenzo-p-dioxins (PCDD) and polychlorinated dibenzofurans (PCDF) and determining cancer risks for a number of specific PCB congeners. See Appendix C of OEHHA's Technical Support Document: Methodologies for Derivation, Listing of Available Values, and Adjustments to Allow for Early Life Exposures (2009) for more information about the scheme. See section 8.2.3 of OEHHA's The Air Toxics Hot Spots Program Guidance Manual for Preparation of Health Risk Assessments for conducting health risks when total (unspeciated) chlorinated dioxins and furans are reported. The two numbers (i.e., 1085 and 1086) in the column listing Chemical Abstracts Numbers are used for reporting and risk assessment purposes. Be sure to input emissions under the proper code when using the HARP software. ID code 1085 has no health values associated with it in the HARP software; therefore, no health impacts will be calculated when using ID 1085. See the Emissions Inventory Criteria and Guidelines for more information on reporting emissions.

Table 1
CONSOLIDATED TABLE OF OEHHA/ARB APPROVED RISK ASSESSMENT HEALTH VALUES*

¶ Particulate Emissions from Diesel-Fueled Engines: The inhalation cancer potency factor and chronic REL were derived from whole diesel exhaust and should be used only for impacts from the inhalation pathway. The inhalation impacts from speciated emissions from diesel-fueled engines are already accounted for in the inhalation cancer potency factor and REL. However, at the discretion of the risk assessor, speciated emissions from diesel-fueled engines may be used to estimate acute noncancer health impacts or the contribution to cancer risk or chronic noncancer health impacts for the non-inhalation exposure pathway. See Appendix D of OEHHA's document *The Air Toxics Hot Spots Program Guidance Manual for Preparation of Health Risk Assessments* for more information.

Other Changes:

- 10/18/2010, removed CHLORODIFLUOROMETHANE, which should have been removed in May 2008.

Table 4.1D-6 Census Tract Numbers and Population Data (2010)

Tract Number	Tract Population (2010)
469	2,043

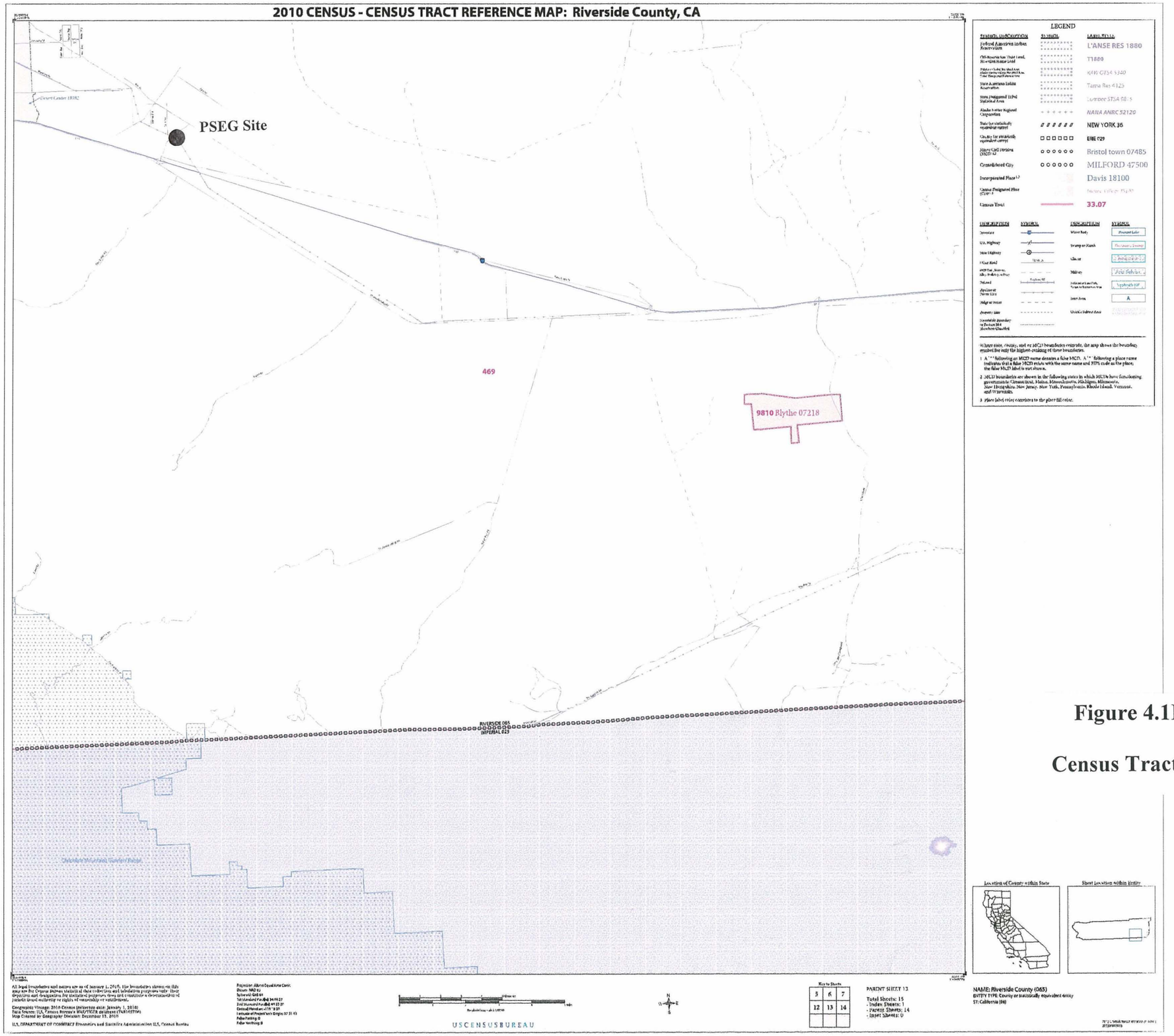

Figure 4.1D-1

Census Tract Map

Figure 4.1D-2 6 Mile Radius Zone Map

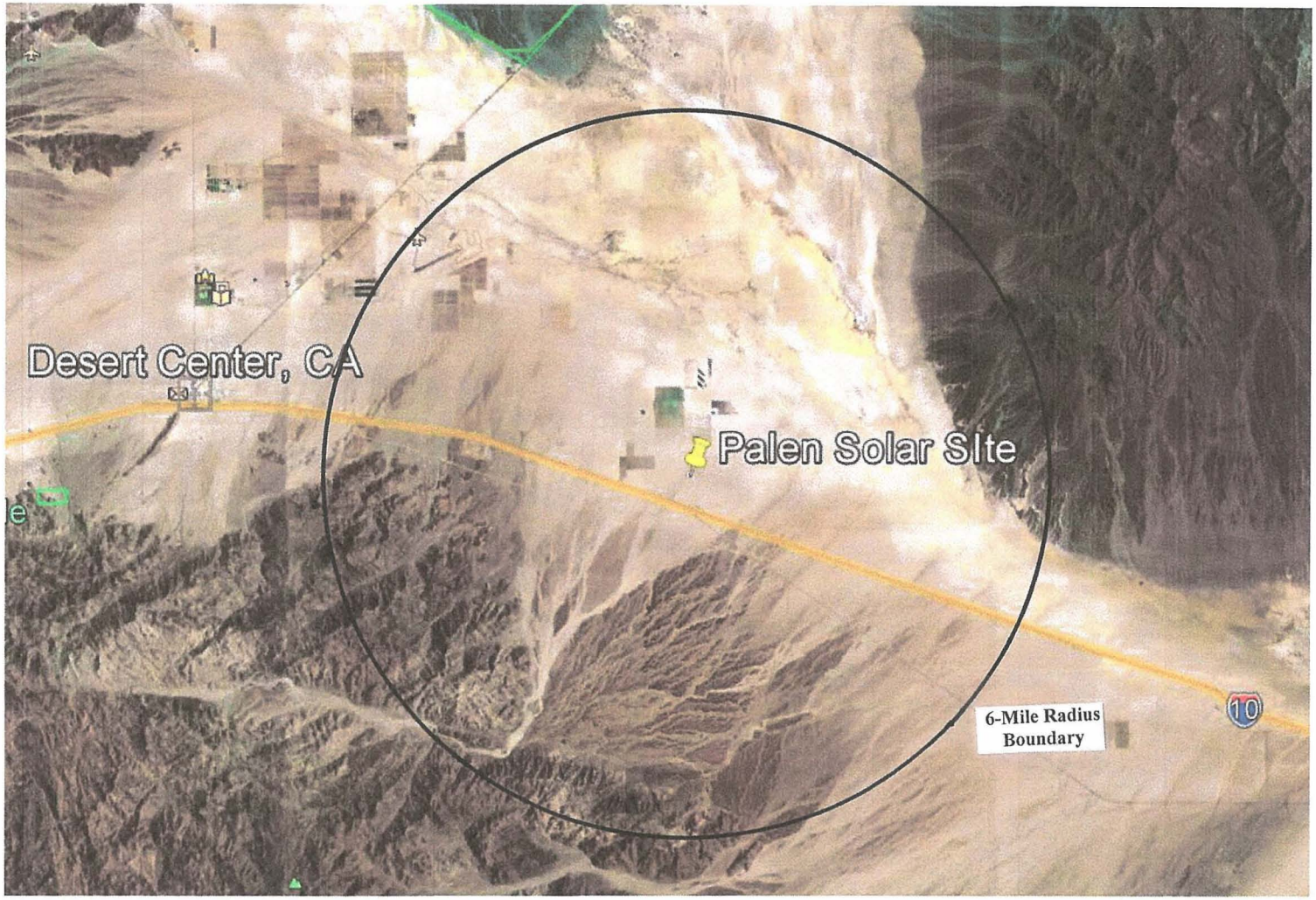

Figure 4.1D-3 Three Highest MIR Locations

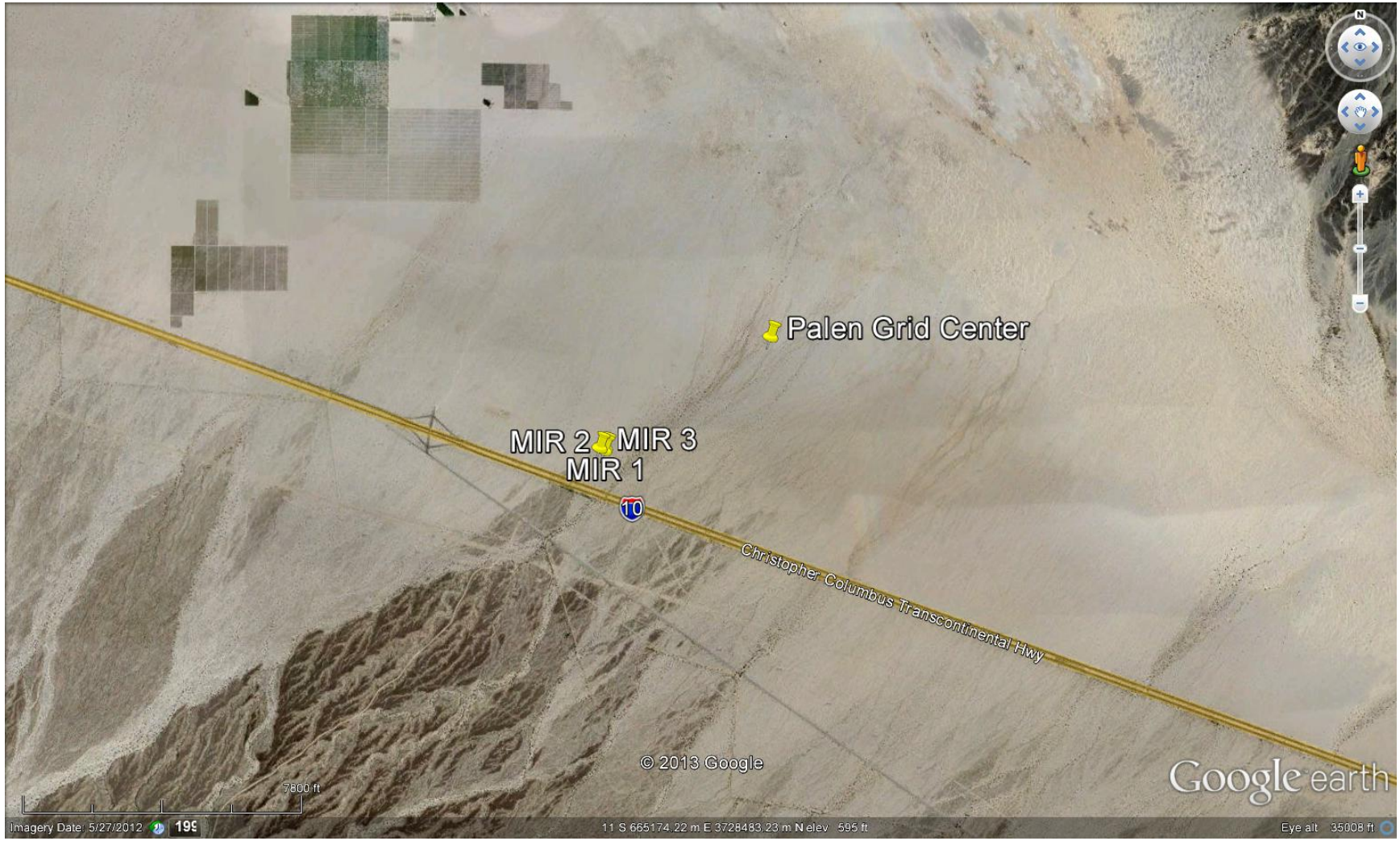

APPENDIX 4.1E

Construction Emissions and Impact Analysis

Construction Phases

Construction of PSEGS is expected to last approximately 33 months (2.75 years). Month 1 will be a pre-construction preparation month, with actual physical construction occurring for 32 months. The construction will occur in the following four main phases:

- Site preparation;
- Foundation work;
- Construction/installation of major structures, equipment, and linears.

Construction Schedule

The construction sequence for power plant construction includes the following general steps: (1) mobilization, (2) site preparation and grading, (3) foundation construction, (4) major equipment installation including the solar array field and offsite linears (if required), (5) balance of plant construction, (6) testing and commissioning. The typical work week will be approximately 5 days/week, 52 weeks/year, at a range of 8-16 hours/day. This schedule yields approximately 21 work days/month, and 252-260 work days/year.

The total site related acreage is ~3794 acres, i.e., the area inside the fence-line. Only 337.2 acres will actually be graded or have extensive earthwork. The maximum acreage disturbed on any one day during construction (earthwork phase) will be approximately 10% of the total, or approximately 34 acres. The maximum acreage to be disturbed during power block and heliostat installation will be 211 acres, with these disturbance activities related to vehicle movements and heliostat foundation work. The maximum acreage disturbed on any one day during power block and heliostat installation will be 26 acres. Although the site is essentially flat, the site will require minimum grading and leveling prior to construction of the power blocks, support systems, solar array field, and site buildings. Site preparation includes finish grading, excavation of footings and foundations, and backfilling operations. After site preparation is finished, the construction of the foundations and structures is expected to begin. Once the foundations and structures are finished, installation and assembly of the mechanical and electrical equipment are scheduled to commence.

Fugitive dust emissions from the construction of PSEGS will result from:

- Dust entrained during site preparation and finish grading/excavation at the construction site;
- Dust entrained during offsite travel on paved and unpaved surfaces;
- Dust entrained during aggregate and soil loading and unloading operations; and
- Wind erosion of areas disturbed during construction activities.

Combustion emissions during construction will result from:

- Exhaust from the Diesel construction equipment used for site preparation, grading, excavation, and construction of onsite structures;
- Exhaust from water trucks used to control construction dust emissions;
- Exhaust from Diesel-powered welding machines, electric generators, air compressors, and water pumps;
- Exhaust from pickup trucks and Diesel trucks used to transport workers and materials around the construction site;
- Exhaust from Diesel trucks used to deliver concrete, fuel, and construction supplies to the construction site; and,
- Exhaust from automobiles used by workers to commute to the construction site.

To determine the potential worst-case daily construction impacts, exhaust and dust emission rates have been evaluated for each source of emissions. Worst-case daily dust emissions are expected to occur during the first months of construction when site preparation occurs. The worst-case daily exhaust emissions are expected to occur during the middle of the construction schedule during the installation of the major mechanical equipment. Annual emissions are based on the average equipment mix and use rates during the construction period. Daily emissions are derived from the annual values using the estimated construction time frame.

Available Mitigation Measures

The following mitigation measures are proposed to control exhaust emissions from the Diesel heavy equipment used during construction of PSEGS:

- The applicant will have an on-site construction mitigation manager who will be responsible for the implementation and compliance of the construction mitigation program. The documentation of the ongoing implementation and compliance with the proposed construction mitigations will be provided on a periodic basis.
- All unpaved roads and disturbed areas in the project and laydown construction sites will be watered as frequently as necessary to control fugitive dust. The frequency of watering will be on a minimum schedule of three to four times during the daily construction activity period. Watering may be reduced or eliminated during periods of precipitation.
- Onsite vehicle speeds will be limited to <15 miles per hour on unpaved areas within the project construction site.
- The construction site entrance(s) will be posted with visible speed limit signs.
- All construction equipment vehicle tires will be inspected and cleaned as necessary to be free of dirt prior to leaving the construction site via paved roadways.

- Gravel ramps will be provided at the tire cleaning area.
- All unpaved exits from the construction site will be graveled or treated to reduce track-out to public roadways.
- All construction vehicles will enter the construction site through the treated entrance roadways, unless an alternative route has been provided.
- Construction areas adjacent to any paved roadway will be provided with sandbags or other similar measures as specified in the construction Storm Water Pollution Prevention Plan (SWPPP) to prevent runoff to roadways.
- All paved roads within the construction site will be cleaned on a periodic basis (or less during periods of precipitation), to prevent the accumulation of dirt and debris.
- The first 500 feet of any public roadway exiting the construction site will be cleaned on a periodic basis (or less during periods of precipitation), using wet sweepers or air filtered dry vacuum sweepers, when construction activity occurs or on any day when dirt or runoff from the construction site is visible on the public roadways.
- Any soil storage piles and/or disturbed areas that remain inactive for longer than 10 days will be covered, or shall be treated with appropriate dust suppressant compounds.
- All vehicles that are used to transport solid bulk material on public roadways and that have the potential to cause visible emissions will be covered, or the materials shall be sufficiently wetted and loaded onto the trucks in a manner to minimize fugitive dust emissions. A minimum freeboard height of two (2) feet will be required on all bulk materials transport.
- Wind erosion control techniques (such as windbreaks, water, chemical dust suppressants, and/or vegetation) will be used on all construction areas that may be disturbed. Any windbreaks installed to comply with this condition will remain in place until the soil is stabilized or permanently covered with vegetation.
- Disturbed areas will be re-vegetated as soon as practical.

To mitigate exhaust emissions from construction equipment, the applicant is proposing the following:

- The applicant will work with the construction contractor to utilize to the extent feasible, EPA-ARB Tier 2/Tier 3 engine compliant equipment for equipment over 100 horsepower.
- Insure periodic maintenance and inspections per the manufacturer's specifications.
- Reduce idling time through equipment and construction scheduling.
- Use California low sulfur diesel fuels (<=15 ppmw S).

Estimation of Emissions with Mitigation Measures

Tables 4.1E-1 through 4.1E-3 show the estimated average daily and annual onsite heavy equipment exhaust and fugitive dust emissions. Detailed emission calculations are included in Table 4.1E-5 (33 pages).

Table 4.1E-1 Fugitive Dust Emissions Estimates	PM10	PM2.5
Fugitive Dust Source	Lbs/day	Lbs/day
Onsite Grading/Earthwork/Cut & Fill	9.52	2.0
Onsite Erection Phase	11.39	2.39
Onsite Gas Line	0.11	0.02
Onsite T-Line	0.16	0.03
Onsite Paved Roads	1.04	0.2
Onsite Soil Storage Piles	0.52	0.21
Onsite Unpaved Roads	6.95	0.69
Onsite Concrete Batch Plant	2.09	0.21
Offsite Access Road Construction	*0.27*	*0.06*
Offsite Paved Roads	*7.4*	*1.25*
Offsite Unpaved Roads	*0*	*0*
Offsite Track-out	*0.29*	*0.05*
Fugitive Dust Source	Tons/Period	Tons/Period
Onsite Grading/Earthwork/Cut & Fill	1.51	0.32
Onsite Erection Phase	3.39	0.71
Onsite Gas Line	0.01	0.002
Onsite T-Line	0.02	0.004
Onsite Paved Roads	0.34	0.06
Onsite Soil Storage Piles	0.09	0.04
Onsite Unpaved Roads	2.07	0.21
Onsite Concrete Batch Plant	0.31	0.03
Offsite Access Road Construction	*0.02*	*0.0034*
Offsite Paved Roads	*2.42*	*0.41*
Offsite Unpaved Roads	*0*	*0*
Offsite Track-out	*0.10*	*0.02*
Fugitive Dust Source	Normalized Tons/Year	Normalized Tons/Year
Max Total Onsite Fugitive Dust Emissions	*2.81*	*0.5*
Max Total Offsite Fugitive Dust Emissions	*0.92*	*0.16*

Table 4.1E-2 Construction Exhaust Emissions Estimates (total facility)						
Exhaust Sources, lbs/day	NOx	CO	VOC	SOx	PM10	PM2.5
Onsite Power Block/Solar Fields	760.8	396	97.1	1	37.7	37.7
Onsite Support Vehicles	0.17	1.63	0.14	0.0025	0.026	0.026
Offsite Delivery/Hauling	*19.9*	*7.62*	*1.55*	*0.04*	*0.93*	*0.93*
Offsite Worker Travel	*21.9*	*244.9*	*21.0*	*0.45*	*9.32*	*9.32*
Exhaust Sources, Tons/Period	NOx	CO	VOC	SOx	PM10	PM2.5
Onsite Power Block/Solar Fields	263.62	137.2	33.64	0.36	13.07	13.07
Onsite Support Vehicles	0.057	0.563	0.047	0.001	0.009	0.009
Offsite Delivery/Hauling	*6.9*	*2.64*	*0.54*	*0.013*	*0.323*	*0.323*
Offsite Worker Travel	*7.59*	*84.9*	*7.28*	*0.155*	*1.4*	*1.4*
Exhaust Sources, Normalized Tons/Yr	NOx	CO	VOC	SOx	PM10	PM2.5
Max Total Onsite Exhaust Emissions	*95.88*	*50.1*	*12.25*	*0.131*	*4.76*	*4.76*
Max Total Offsite Exhaust Emissions	*5.27*	*31.83*	*2.84*	*0.061*	*0.63*	*0.63*

Table 4.1E-3 presents the estimates of GHGs for the construction phase.

Table 4.1E-3 GHG Construction Emissions Estimates	
Total CO2e, short tons/period	50705
Total CO2e, metric tons/period	46095
Total CO2e, normalized short tons/yr	18438
Total CO2e, normalized metric tons/yr	16762

Analysis of Ambient Impacts from Facility Construction

Ambient air quality impacts from emissions during the construction of PSEGS were estimated using an air quality dispersion modeling analysis. The modeling analysis considers the construction site location, the surrounding topography, and the sources of emissions during construction, including vehicle and equipment exhaust emissions and fugitive dust.

Existing Ambient Levels

As with the modeling analysis of project operating impacts (Section 4.1), monitoring stations delineated in Section 4.1 were used to establish the ambient background levels for the construction impact modeling analysis. Table 4.1-18 showed the maximum concentrations of NO_x, SO_2, CO, PM10, and PM2.5 recorded for 2009 through 2011 at those monitoring stations.

Dispersion Model

As in the analysis of project operating impacts, the USEPA-approved model AERMOD (version12345) was used to estimate ambient impacts from construction activities. A detailed discussion of the AERMOD model and the associated processing programs AERSURFACE, AERMET, and AERMAP is included in Section 4.1.

The emission sources for the construction site were grouped into two categories: exhaust emissions and dust emissions. Combustion equipment exhaust emissions were modeled as 3.048 meter high point sources (exhaust parameters of 750 Kelvin, 64.681 m/s velocity, and 0.1524m diameter) placed at regular intervals. Construction fugitive dust emissions were modeled as area sources with an effective height of 0.5 meters. Short-term impacts were modeled assuming the emissions were located at the two power blocks, the common area, and, for the site preparation phase, the construction and truck staging area. This resulted in seventeen (17) point sources (2 acres/source, located 50-100 meters apart) and area sources approximating the 34 and 26 acre areas discussed above for site preparation and power block and heliostat installation phases, respectively. Annual normalized emissions were spread over the entire facility area containing the power blocks and heliostats consistent with the facility layout, resulting in fifty (50) point sources (located 500 meters apart) and a 3576 acre area source when modeling annual impacts. Combustion and fugitive emissions were assumed to occur for 12 hours/day (8 AM to 8 PM), which represents an average of the workday periods which will fluctuate between 8 and 16 hours per day. The construction impacts modeling analysis used the same meteorological data and other modeling inputs as used for the project operating impact analysis. However, for the construction modeling, only the facility fenceline and nearby downwash receptor grid from the operational impacts modeled were used (both with 50-meter spacing), since maximum impacts will occur in the immediate vicinity of the property boundary. Also, the FASTALL option was used for the construction modeling as footnoted in Section 4.1.8. A detailed discussion of the receptor locations and meteorological data is included in Section 4.1.

To determine the construction impacts on short-term ambient standards (24 hours and less), the estimated worst-case daily onsite construction emission levels shown in Tables 4.1E-1 and 4.1E-1 were used. For pollutants with annual average ambient standards, the annual onsite emission levels shown in Tables 4.1E-1 and 4.1E-2 were used.

Modeling Results

Based on the emission rates of NO_x, SO_2, CO, PM2.5, and PM10, the modeling options, receptor grids, and meteorological data, AERMOD calculates short-term and annual ambient impacts for each pollutant. As mentioned above, the modeled 1-hour, 3-hour 8-hour, and 24-hour ambient impacts are based on the worst-case daily emission rates of NO_x, SO_2, CO, PM2.5, and PM10 while the annual impacts are based on the annual emission rates of these pollutants, both spread over the estimated daily 12 hours of operation.

NO_2 impacts were computed using the ambient ratio method (ARM) with the USEPA default values of 0.80 and 0.75 for the 1-hour and annual NO_2/NO_x ratios, respectively.

The modeling analysis results are shown in Table 4.1E-4. Also included in the table are the maximum background levels that have occurred in the last three years and the resulting total ambient impacts. As shown in Table 4.1E-4, modeled construction impacts for all

modeled pollutants are expected to be below the most stringent state and national standards except for new 1-hour NO_2 national standard. In addition, total combined (modeled plus background) impacts are greater than the 24-hour and annual average PM10 state standards since background pollutant concentrations already exceed these standards in the absence of the construction emissions for PSEGS. For the Federal 24-hour average, the project also exceeds the standard of 150 µg/m³. If background 24-hour PM10 from Indio is used (132 µg/m³), which is closer the project site, modeled plus background would be in compliance at 147.4 µg/m³.

TABLE 4.1E-4 MODELED MAXIMUM CONSTRUCTION IMPACTS

Pollutant	Averaging Time	Maximum Construction Impacts (µg/m³)	Background (µg/m³)	Total Impact (µg/m³)	State Standard (µg/m³)	Federal Standard (µg/m³)
NO_2[a]	1-hr CAAQS 1-hr NAAQS Annual	200.6 200.6 0.7	124.3 97.8 22.6	324.9 298.4 23.3	339 - 57	- 188 100
SO_2	1-hour 3-hour 24-hour	0.33 0.21 0.07	28.6 28.6 13.1	28.9 28.8 13.2	655 - 105	196 1300 -
CO	1-hour 8-hour	131 52	3543 2000	3674 2052	23,000 10,000	40,000 10,000
PM10	24-hour Annual	15.3 0.10	144.8 32.7	160.1 32.8	50 20	150 -
PM2.5	24-hour Annual	3.4 0.05	15.7 7.8	19.1 7.9	- 12	35 15.0

Notes:
[a]ARM applied for 1-hour and annual averages, using USEPA defaults of 0.80 and 0.75 for the 1-hour and annual NO_2/NOx ratios,respectivly.

It should be noted that modeled PSEGS construction impacts are not unusual in comparison to modeled impacts for most construction sites; in practice, construction sites that use good dust suppression techniques and low-emitting vehicles typically would not be expected to cause exceedances of ambient air quality standards. The input and output modeling files are being provided electronically to the appropriate agencies. The construction modeling impact summary is presented in Appendix 4.1B.

Attachment - Detailed Emission Calculations

Table 4.1E-5 Construction Emissions Calculations (33 pages)

Table 4.1E-6 Construction Schedule

Table 4.1E-7 Construction Equipment Schedules

Table 4.1E-8 Construction Manpower Schedules

Table 4.1E-9 Riverside County (SCAQMD) EMFAC Output

Table 4.1E-10 EMFAC Composite EF Calculations

Table 4.1E-5 Construction Emissions Estimates (33 Pages)

Document: 459892-PSEGS-DOC-005
Client: BrightSource Industries Israel
Project: Palen Solar Electric Generating Facility

Const Months: 33
Workdays per month: 21

Qty	Equipment	Fuel	HP	Usage Factor	Load Factor	Daily Operation	Total Equip Months
Solar Field Assembly and Installation (total for 2 plants)							
2 ea	ISO Carrier	Diesel	290 hp	80%	57%	8 hrs/day	48
2 ea	10,000 lb Forklift	Diesel	90 hp	80%	30%	16 hrs/day	48
2 ea	300 cfm Air Compressor	Diesel	140 hp	80%	48%	16 hrs/day	48
2 ea	Yard Tractors	Diesel	250 hp	80%	60%	16 hrs/day	52
6 ea	Grader (CAT 160M AWD)	Diesel	215 hp	80%	61%	8 hrs/day	86
16 ea	Farm Tractors	Diesel	75 hp	80%	55%	8 hrs/day	392
2 ea	35 ton Rough Terrain Crane	Diesel	160 hp	80%	43%	8 hrs/day	52
4 ea	Pylon Insertion Rigs	Diesel	670 hp	80%	62%	8 hrs/day	96
Site Road Work							
2 ea	Grader (CAT 160M AWD)	Diesel	215 hp	80%	61%	8 hrs/day	12
4 ea	Elevating Scraper (CAT)	Diesel	330 hp	80%	72%	8 hrs/day	20
1 ea	Compactor (CAT CP74)	Diesel	160 hp	80%	50%	8 hrs/day	5
1 ea	Paver	Diesel	220 hp	80%	62%	6 hrs/day	4
Concrete Batch Plant							
1 ea	Front End Loader (CAT 980K)	Diesel	369 hp	80%	55%	8 hrs/day	14
20 ea	Concrete Transit Mix Trucks	Diesel	400 hp	80%	62%	8 hrs/day	218
Tower and Boiler Erection (total for 2 plants)							
2 ea	Strand Jack System	Diesel	670 hp	80%	62%	5 hrs/day	12
2 ea	888 Manitowoc Crawler Crane	Diesel	330 hp	80%	43%	8 hrs/day	16
2 ea	120 ton Rough Terrain Picker	Diesel	300 hp	80%	43%	8 hrs/day	18
4 ea	50 ton Rough Terrain Picker	Diesel	190 hp	80%	43%	8 hrs/day	33
2 ea	10,000 lb Forklift	Diesel	90 hp	80%	30%	8 hrs/day	18
8 ea	400 amp Diesel Welders	Diesel	40 hp	80%	45%	8 hrs/day	54
8 ea	300 cfm Air Compressor	Diesel	140 hp	80%	48%	8 hrs/day	66
12 ea	125 ft Manlift	Diesel	75 hp	80%	46%	8 hrs/day	102
4 ea	Semi Tractor	Diesel	250 hp	80%	62%	8 hrs/day	36
ACC Erection (total for 2 plants)							
2 ea	888 Manitowoc Crawler Crane	Diesel	330 hp	80%	43%	8 hrs/day	16
4 ea	50 ton Rough Terrain Picker	Diesel	190 hp	80%	43%	8 hrs/day	44
2 ea	50,000 lb Forklift	Diesel	230 hp	80%	30%	8 hrs/day	18
2 ea	10,000 lb Forklift	Diesel	90 hp	80%	30%	8 hrs/day	20
4 ea	40 ft Manlift	Diesel	50 hp	80%	46%	8 hrs/day	39
4 ea	60 ft Manlift	Diesel	50 hp	80%	46%	8 hrs/day	39
4 ea	85 ft Manlift	Diesel	75 hp	80%	46%	8 hrs/day	42
2 ea	400 amp Diesel Welders	Diesel	40 hp	80%	45%	8 hrs/day	20
2 ea	Semi Tractor	Diesel	250 hp	80%	62%	8 hrs/day	26
4 ea	300 cfm Air Compressor	Diesel	140 hp	80%	48%	8 hrs/day	40
Power Block Erection (total for 2 plants)							
2 ea	888 Manitowoc Crawler Crane	Diesel	330 hp	80%	43%	8 hrs/day	10
2 ea	65 ton Rough Terrain Crane	Diesel	250 hp	80%	43%	8 hrs/day	36
4 ea	35 ton Rough Terrain Crane	Diesel	160 hp	80%	43%	8 hrs/day	93
2 ea	Front End Loader (CAT 980K)	Diesel	369 hp	80%	55%	8 hrs/day	14
2 ea	Excavator, Hydraulic (CAT 318E)	Diesel	120 hp	40%	70%	8 hrs/day	14
2 ea	Compactor (CAT CP74)	Diesel	160 hp	80%	50%	8 hrs/day	12
4 ea	400 amp Diesel Welders	Diesel	40 hp	80%	45%	8 hrs/day	92
4 ea	300 cfm Air Compressor	Diesel	140 hp	80%	48%	8 hrs/day	92
4 ea	40 ft Manlift	Diesel	50 hp	80%	46%	8 hrs/day	88
8 ea	60 ft Manlift	Diesel	50 hp	80%	46%	8 hrs/day	114
4 ea	85 ft Manlift	Diesel	75 hp	80%	46%	8 hrs/day	53
4 ea	10,000 lb Forklift	Diesel	90 hp	80%	30%	8 hrs/day	55
4 ea	Semi Tractor	Diesel	250 hp	80%	62%	8 hrs/day	55
Common Area and Switchyard							
1 ea	35 ton Rough Terrain Crane	Diesel	160 hp	80%	43%	8 hrs/day	11
1 ea	Excavator, Hydraulic (CAT 318E)	Diesel	120 hp	40%	70%	8 hrs/day	8
1 ea	Trencher (Vermeer T555)	Diesel	185 hp	35%	60%	8 hrs/day	5
1 ea	Elevating Scraper (CAT)	Diesel	330 hp	80%	72%	8 hrs/day	5
1 ea	Bulldozer (CAT D6N)	Diesel	150 hp	40%	60%	8 hrs/day	9
1 ea	Compactor (CAT CP74)	Diesel	160 hp	80%	50%	8 hrs/day	7
1 ea	10,000 lb Forklift	Diesel	90 hp	80%	30%	8 hrs/day	6
2 ea	60 ft Manlift	Diesel	50 hp	80%	46%	8 hrs/day	22
1 ea	400 amp Diesel Welders	Diesel	40 hp	80%	45%	8 hrs/day	4
1 ea	300 cfm Air Compressor	Diesel	140 hp	80%	48%	8 hrs/day	4
Miscellaneous							
6 ea	Water Trucks (4,000 gallon)	Diesel	250 hp	60%	41%	8 hrs/day	159
6 ea	Dump Truck, 12-16 YD	Diesel	325 hp	40%	38%	8 hrs/day	57
8 ea	Pickup Trucks	Gasoline	250 hp	25%	60%	8 hrs/day	248
12 ea	AWD Gators	Gasoline	25 hp	25%	50%	8 hrs/day	326
2 ea	Diesel Generator, 500 kW	Diesel	730 hp	45%	50%	8 hrs/day	18
8 ea	Diesel Generator, 1250 kW	Diesel	1,750 hp	45%	50%	8 hrs/day	56

Any equip type described under Load Factor as "On Road" on Table E.5-7 were assigned Usage Factors and Load Factors based on the SCAQMD CEQA Handbook data tables.
Load and use factors not counted in Hp-Hr calculations, since these parameters are accounted for in the SCAQMD emissions factors (2013).

Total Equip Days	Hp-Hrs per Day	Total Period Hp-Hrs	Emissions Factors (SCAQMD Offroad Database for 2013) lbs/hp-hr VOC	CO	Nox	SOx	PM10/2.5	CO2	CH4
1008	2320	2338560	0.0008235	0.00433151	0.00588838	8.0426E-06	0.00034397	0.71478726	7.4303E-05
1008	1440	1451520	0.00036498	0.0018134	0.00232311	3.0524E-06	0.0002009	0.26020763	3.2932E-05
1008	2240	2257920	0.00068712	0.00270913	0.00415922	4.5896E-06	0.00037965	0.39125195	6.1998E-05
1092	4000	4368000	0.00065653	0.0018763	0.00578114	5.8697E-06	0.0002405	0.52166926	5.9238E-05
1806	1720	3106320	0.00083826	0.00419732	0.00639624	7.9676E-06	0.0003608	0.70812305	7.5635E-05
8232	600	4939200	0.00176099	0.00599226	0.01030696	9.1632E-06	0.0008983	0.78114508	0.00015889
1092	1280	1397760	0.00058936	0.00275489	0.00443923	5.1658E-06	0.00025438	0.45911188	5.3177E-05
2016	5360	10805760	0.00040205	0.00430746	0.00396039	9.0706E-06	0.00017232	0.80615095	3.6276E-05
17262	*18960*	*30665040*							
252	1720	433440	0.00083826	0.00419732	0.00639624	7.9676E-06	0.0003608	0.70812305	7.5635E-05
420	2640	1108800	0.00090099	0.00256338	0.00819244	9.4276E-06	0.00031628	0.83788089	8.1295E-05
105	1280	134400	0.00072034	0.00327316	0.0053333	6.168E-06	0.00031386	0.54818254	6.4995E-05
84	1320	110880	0.00082868	0.00243221	0.00778747	8.7481E-06	0.00030225	0.77748782	7.477E-05
861	*6960*	*1787520*							
294	2952	867888	0.00050341	0.00147381	0.00484993	6.705E-06	0.00016676	0.59590672	4.5422E-05
4578	3200	14649600	0.00042696	0.00127675	0.0041284	5.2102E-06	0.00013865	0.53082357	3.8524E-05
4872	*6152*	*15517488*							
252	3350	844200	0.00034199	0.00145324	0.00311683	8.2461E-06	9.5303E-05	0.82012413	3.0858E-05
336	2640	887040	0.00041613	0.00117911	0.00397901	5.0479E-06	0.00014037	0.44863548	3.7547E-05
378	2400	907200	0.00046486	0.00202084	0.00313134	3.7217E-06	0.00024895	0.31726514	4.1944E-05
693	1520	1053360	0.00046486	0.00202084	0.00313134	3.7217E-06	0.00024895	0.31726514	4.1944E-05
378	720	272160	0.00036498	0.0018134	0.00232311	3.0524E-06	0.0002009	0.26020763	3.2932E-05
1134	320	362880	0.00195865	0.00550649	0.00506942	6.7115E-06	0.0004794	0.5191612	0.00017673
1386	1120	1552320	0.00068712	0.00270913	0.00415922	4.5896E-06	0.00037965	0.39125195	6.1998E-05
2142	600	1285200	0.00118313	0.00351491	0.00367918	5.0709E-06	0.00031107	0.39225519	0.00010675
756	2000	1512000	0.00055989	0.00153465	0.00494923	7.4957E-06	0.00016495	0.66618161	5.0518E-05
7455	*14670*	*8676360*							
336	2640	887040	0.00041613	0.00117911	0.00397901	5.0479E-06	0.00014037	0.44863548	3.7547E-05
924	1520	1404480	0.00046486	0.00202084	0.00313134	3.7217E-06	0.00024895	0.31726514	4.1944E-05
378	1840	695520	0.00022802	0.00064556	0.00211258	3.471E-06	6.7036E-05	0.30848706	2.0574E-05
420	720	302400	0.00036498	0.0018134	0.00232311	3.0524E-06	0.0002009	0.26020763	3.2932E-05
819	400	327600	0.00118313	0.00351491	0.00367918	5.0709E-06	0.00031107	0.39225519	0.00010675
819	400	327600	0.00118313	0.00351491	0.00367918	5.0709E-06	0.00031107	0.39225519	0.00010675
882	600	529200	0.00118313	0.00351491	0.00367918	5.0709E-06	0.00031107	0.39225519	0.00010675
420	320	134400	0.00195865	0.00550649	0.00506942	6.7115E-06	0.0004794	0.5191612	0.00017673
546	2000	1092000	0.00055989	0.00153465	0.00494923	7.4957E-06	0.00016495	0.66618161	5.0518E-05
840	1120	940800	0.00068712	0.00270913	0.00415922	4.5896E-06	0.00037965	0.39125195	6.1998E-05
6384	*11560*	*6641040*							
210	2640	554400	0.00041613	0.00117911	0.00397901	5.0479E-06	0.00014037	0.44863548	3.7547E-05
756	2000	1512000	0.00041613	0.00117911	0.00397901	5.0479E-06	0.00014037	0.44863548	3.7547E-05
1953	1280	2499840	0.00058936	0.00275489	0.00443923	5.1658E-06	0.00025438	0.45911188	5.3177E-05
294	2952	867888	0.00050341	0.00147381	0.00484993	6.705E-06	0.00016676	0.59590672	4.5422E-05
294	960	282240	0.0009053	0.00431384	0.0056594	7.197E-06	0.0004886	0.61352552	8.1684E-05
252	1280	322560	0.00072034	0.00327316	0.0053333	6.168E-06	0.00031386	0.54818254	6.4995E-05
1932	320	618240	0.00195865	0.00550649	0.00506942	6.7115E-06	0.0004794	0.5191612	0.00017673
1932	1120	2163840	0.00068712	0.00270913	0.00415922	4.5896E-06	0.00037965	0.39125195	6.1998E-05
1848	400	739200	0.00118313	0.00351491	0.00367918	5.0709E-06	0.00031107	0.39225519	0.00010675
2394	400	957600	0.00118313	0.00351491	0.00367918	5.0709E-06	0.00031107	0.39225519	0.00010675
1113	600	667800	0.00118313	0.00351491	0.00367918	5.0709E-06	0.00031107	0.39225519	0.00010675
1155	720	831600	0.00036498	0.0018134	0.00232311	3.0524E-06	0.0002009	0.26020763	3.2932E-05
1155	2000	2310000	0.00055989	0.00153465	0.00494923	7.4957E-06	0.00016495	0.66618161	5.0518E-05
15288	*16672*	*14327208*							
231	1280	295680	0.00058936	0.00275489	0.00443923	5.1658E-06	0.00025438	0.45911188	5.3177E-05
168	960	161280	0.0009053	0.00431384	0.0056594	7.197E-06	0.0004886	0.61352552	8.1684E-05
105	1480	155400	0.00111695	0.00493278	0.00886838	9.252E-06	0.00048506	0.82227397	0.00010078
105	2640	277200	0.00090099	0.00256338	0.00819244	9.4276E-06	0.00031628	0.83788089	8.1295E-05
189	1200	226800	0.00095637	0.00425626	0.00715924	7.7918E-06	0.00040754	0.69250166	8.6291E-05
147	1280	188160	0.00072034	0.00327316	0.0053333	6.168E-06	0.00031386	0.54818254	6.4995E-05
126	720	90720	0.00036498	0.0018134	0.00232311	3.0524E-06	0.0002009	0.26020763	3.2932E-05
462	400	184800	0.00118313	0.00351491	0.00367918	5.0709E-06	0.00031107	0.39225519	0.00010675
84	320	26880	0.00195865	0.00550649	0.00506942	6.7115E-06	0.0004794	0.5191612	0.00017673
84	1120	94080	0.00068712	0.00270913	0.00415922	4.5896E-06	0.00037965	0.39125195	6.1998E-05
1701	*11400*	*1701000*							
3339	2000	6678000	0.00055989	0.00153465	0.00494923	7.4957E-06	0.00016495	0.66618161	5.0518E-05
1197	2600	3112200	0.00055989	0.00153465	0.00494923	7.4957E-06	0.00016495	0.66618161	5.0518E-05
5208	2000	10416000	0.00003402	0.0004062	0.00004104	0.0000006	0.00000642	0.065358	0
6846	200	1369200	0.0003402	0.004062	0.0004104	0.000006	0.0000642	0.65358	0
378	5840	2207520	0.00040461	0.0015561	0.00531507	7.2902E-06	0.00015125	0.72505326	3.6508E-05
1176	14000	16464000	0.00040461	0.0015561	0.00531507	7.2902E-06	0.00015125	0.72505326	3.6508E-05
18144	*26640*	*40246920*							

Construction Totals lbs/period

tons/period\

		Emissions, lbs/construction period				
VOC	CO	Nox	SOx	PM10/2.5	CO2	CH4
1925.8	10129.5	13770.3	18.8	804.4	1671572.9	173.8
529.8	2632.2	3372.0	4.4	291.6	377696.6	47.8
1551.5	6117.0	9391.2	10.4	857.2	883415.6	140.0
2867.7	8195.7	25252.0	25.6	1050.5	2278651.3	258.8
2603.9	13038.2	19868.8	24.7	1120.8	2199656.8	234.9
8697.9	29596.9	50908.2	45.3	4436.9	3858231.8	784.8
823.8	3850.7	6205.0	7.2	355.6	641728.2	74.3
4344.4	46545.3	42795.0	98.0	1862.0	8711073.7	392.0
23344.795	*120105.54*	*171562.51*	*234.48431*	*10778.963*	*20622027*	*2106.3633*
363.3	1819.3	2772.4	3.5	156.4	306928.9	32.8
999.0	2842.3	9083.8	10.5	350.7	929042.3	90.1
96.8	439.9	716.8	0.8	42.2	73675.7	8.7
91.9	269.7	863.5	1.0	33.5	86207.8	8.3
1551.0568	*5371.1571*	*13436.432*	*15.705761*	*582.77505*	*1395854.8*	*139.94939*
436.9	1279.1	4209.2	5.8	144.7	517180.3	39.4
6254.8	18703.9	60479.4	76.3	2031.2	7776353.0	564.4
6691.7488	*19982.964*	*64688.642*	*82.146619*	*2175.9376*	*8293533.2*	*603.78573*
288.7	1226.8	2631.2	7.0	80.5	692348.8	26.0
369.1	1045.9	3529.5	4.5	124.5	397957.6	33.3
421.7	1833.3	2840.7	3.4	225.8	287822.9	38.1
489.7	2128.7	3298.4	3.9	262.2	334194.4	44.2
99.3	493.5	632.3	0.8	54.7	70818.1	9.0
710.8	1998.2	1839.6	2.4	174.0	188393.2	64.1
1066.6	4205.4	6456.4	7.1	589.3	607348.2	96.2
1520.6	4517.4	4728.5	6.5	399.8	504126.4	137.2
846.6	2320.4	7483.2	11.3	249.4	1007266.6	76.4
5813.0571	*19769.657*	*33439.948*	*46.976929*	*2160.2161*	*4090276.3*	*524.50284*
369.1	1045.9	3529.5	4.5	124.5	397957.6	33.3
652.9	2838.2	4397.9	5.2	349.6	445592.5	58.9
158.6	449.0	1469.3	2.4	46.6	214558.9	14.3
110.4	548.4	702.5	0.9	60.8	78686.8	10.0
387.6	1151.5	1205.3	1.7	101.9	128502.8	35.0
387.6	1151.5	1205.3	1.7	101.9	128502.8	35.0
626.1	1860.1	1947.0	2.7	164.6	207581.4	56.5
263.2	740.1	681.3	0.9	64.4	69775.3	23.8
611.4	1675.8	5404.6	8.2	180.1	727470.3	55.2
646.4	2548.8	3913.0	4.3	357.2	368089.8	58.3
4213.3606	*14009.25*	*24455.799*	*32.453068*	*1551.6944*	*2766718.3*	*380.16479*
230.7	653.7	2206.0	2.8	77.8	248723.5	20.8
629.2	1782.8	6016.3	7.6	212.2	678336.8	56.8
1473.3	6886.8	11097.4	12.9	635.9	1147706.2	132.9
436.9	1279.1	4209.2	5.8	144.7	517180.3	39.4
255.5	1217.5	1597.3	2.0	137.9	173161.4	23.1
232.4	1055.8	1720.3	2.0	101.2	176821.8	21.0
1210.9	3404.3	3134.1	4.1	296.4	320966.2	109.3
1486.8	5862.1	8999.9	9.9	821.5	846606.6	134.2
874.6	2598.2	2719.7	3.7	229.9	289955.0	78.9
1133.0	3365.9	3523.2	4.9	297.9	375623.6	102.2
790.1	2347.3	2457.0	3.4	207.7	261948.0	71.3
303.5	1508.0	1931.9	2.5	167.1	216388.7	27.4
1293.3	3545.0	11432.7	17.3	381.0	1538879.5	116.7
10350.183	*35506.605*	*61044.81*	*79.109081*	*3711.3815*	*6792297.7*	*933.88047*
174.3	814.6	1312.6	1.5	75.2	135750.2	15.7
146.0	695.7	912.7	1.2	78.8	98949.4	13.2
173.6	766.6	1378.1	1.4	75.4	127781.4	15.7
249.8	710.6	2270.9	2.6	87.7	232260.6	22.5
216.9	965.3	1623.7	1.8	92.4	157059.4	19.6
135.5	615.9	1003.5	1.2	59.1	103146.0	12.2
33.1	164.5	210.8	0.3	18.2	23606.0	3.0
218.6	649.6	679.9	0.9	57.5	72488.8	19.7
52.6	148.0	136.3	0.2	12.9	13955.1	4.8
64.6	254.9	391.3	0.4	35.7	36809.0	5.8
1465.0858	*5785.5771*	*9919.8879*	*11.493198*	*592.87159*	*1001805.8*	*132.19235*
3738.9	10248.4	33051.0	50.1	1101.5	4448760.8	337.4
1742.5	4776.1	15403.0	23.3	513.4	2073290.4	157.2
354.4	4231.0	427.5	6.2	66.9	680768.9	0.0
465.8	5561.7	561.9	8.2	87.9	894881.7	0.0
893.2	3435.1	11733.1	16.1	333.9	1600569.6	80.6
6661.6	25619.7	87507.3	120.0	2490.2	11937276.9	601.1
13856.33	*53872.015*	*148683.8*	*223.96838*	*4593.7977*	*21635548*	*1176.2335*
67285.6	274402.8	527231.8	726.3	26147.6	66598061.5	5997.1
33.64	137.20	263.62	0.36	13.07	33299.03	3.00

		Emissions, lbs/construction month				
VOC	CO	Nox	SOx	PM10/2.5	CO2	CH4
58.4	307.0	417.3	0.6	24.4	50653.7	5.3
16.1	79.8	102.2	0.1	8.8	11445.4	1.4
47.0	185.4	284.6	0.3	26.0	26770.2	4.2
86.9	248.4	765.2	0.8	31.8	69050.0	7.8
78.9	395.1	602.1	0.7	34.0	66656.3	7.1
263.6	896.9	1542.7	1.4	134.5	116916.1	23.8
25.0	116.7	188.0	0.2	10.8	19446.3	2.3
131.6	1410.5	1296.8	3.0	56.4	263971.9	11.9
707.41802	*3639.5619*	*5198.8639*	*7.1055851*	*326.63525*	*624909.91*	*63.829192*
11.0	55.1	84.0	0.1	4.7	9300.9	1.0
30.3	86.1	275.3	0.3	10.6	28152.8	2.7
2.9	13.3	21.7	0.0	1.3	2232.6	0.3
2.8	8.2	26.2	0.0	1.0	2612.4	0.3
47.001721	*162.76234*	*407.16462*	*0.4759322*	*17.65985*	*42298.629*	*4.2408905*
13.2	38.8	127.6	0.2	4.4	15672.1	1.2
189.5	566.8	1832.7	2.3	61.6	235647.1	17.1
202.78027	*605.54437*	*1960.2619*	*2.4892915*	*65.937502*	*251319.19*	*18.296537*
8.7	37.2	79.7	0.2	2.4	20980.3	0.8
11.2	31.7	107.0	0.1	3.8	12059.3	1.0
12.8	55.6	86.1	0.1	6.8	8721.9	1.2
14.8	64.5	100.0	0.1	7.9	10127.1	1.3
3.0	15.0	19.2	0.0	1.7	2146.0	0.3
21.5	60.6	55.7	0.1	5.3	5708.9	1.9
32.3	127.4	195.6	0.2	17.9	18404.5	2.9
46.1	136.9	143.3	0.2	12.1	15276.6	4.2
25.7	70.3	226.8	0.3	7.6	30523.2	2.3
176.15325	*599.08053*	*1013.3317*	*1.4235433*	*65.461094*	*123947.77*	*15.894025*
11.2	31.7	107.0	0.1	3.8	12059.3	1.0
19.8	86.0	133.3	0.2	10.6	13502.8	1.8
4.8	13.6	44.5	0.1	1.4	6501.8	0.4
3.3	16.6	21.3	0.0	1.8	2384.4	0.3
11.7	34.9	36.5	0.1	3.1	3894.0	1.1
11.7	34.9	36.5	0.1	3.1	3894.0	1.1
19.0	56.4	59.0	0.1	5.0	6290.3	1.7
8.0	22.4	20.6	0.0	2.0	2114.4	0.7
18.5	50.8	163.8	0.2	5.5	22044.6	1.7
19.6	77.2	118.6	0.1	10.8	11154.2	1.8
127.67759	*424.52271*	*741.08482*	*0.9834263*	*47.021042*	*83839.95*	*11.520145*
7.0	19.8	66.8	0.1	2.4	7537.1	0.6
19.1	54.0	182.3	0.2	6.4	20555.7	1.7
44.6	208.7	336.3	0.4	19.3	34779.0	4.0
13.2	38.8	127.6	0.2	4.4	15672.1	1.2
7.7	36.9	48.4	0.1	4.2	5247.3	0.7
7.0	32.0	52.1	0.1	3.1	5358.2	0.6
36.7	103.2	95.0	0.1	9.0	9726.2	3.3
45.1	177.6	272.7	0.3	24.9	25654.7	4.1
26.5	78.7	82.4	0.1	7.0	8786.5	2.4
34.3	102.0	106.8	0.1	9.0	11382.5	3.1
23.9	71.1	74.5	0.1	6.3	7937.8	2.2
9.2	45.7	58.5	0.1	5.1	6557.2	0.8
39.2	107.4	346.4	0.5	11.5	46632.7	3.5
313.64191	*1075.9577*	*1849.8427*	*2.3972449*	*112.46611*	*205827.2*	*28.299408*
5.3	24.7	39.8	0.0	2.3	4113.6	0.5
4.4	21.1	27.7	0.0	2.4	2998.5	0.4
5.3	23.2	41.8	0.0	2.3	3872.2	0.5
7.6	21.5	68.8	0.1	2.7	7038.2	0.7
6.6	29.3	49.2	0.1	2.8	4759.4	0.6
4.1	18.7	30.4	0.0	1.8	3125.6	0.4
1.0	5.0	6.4	0.0	0.6	715.3	0.1
6.6	19.7	20.6	0.0	1.7	2196.6	0.6
1.6	4.5	4.1	0.0	0.4	422.9	0.1
2.0	7.7	11.9	0.0	1.1	1115.4	0.2
44.39654	*175.32052*	*300.60266*	*0.3482787*	*17.965806*	*30357.751*	*4.0058289*
113.3	310.6	1001.5	1.5	33.4	134810.9	10.2
52.8	144.7	466.8	0.7	15.6	62827.0	4.8
10.7	128.2	13.0	0.2	2.0	20629.4	0.0
14.1	168.5	17.0	0.2	2.7	27117.6	0.0
27.1	104.1	355.5	0.5	10.1	48502.1	2.4
201.9	776.4	2651.7	3.6	75.5	361735.7	18.2
419.8888	*1632.4853*	*4505.5696*	*6.7869205*	*139.20599*	*655622.68*	*35.64344*
2039.0	8315.2	15976.7	22.0	792.4	2018123.1	181.7
			lbs/month			

		Emissions, lbs/construction day				
VOC	CO	Nox	SOx	PM10/2.5	CO2	CH4
2.8	14.6	19.9	0.0	1.2	2412.1	0.3
0.8	3.8	4.9	0.0	0.4	545.0	0.1
2.2	8.8	13.6	0.0	1.2	1274.8	0.2
4.1	11.8	36.4	0.0	1.5	3288.1	0.4
3.8	18.8	28.7	0.0	1.6	3174.1	0.3
12.6	42.7	73.5	0.1	6.4	5567.4	1.1
1.2	5.6	9.0	0.0	0.5	926.0	0.1
6.3	67.2	61.8	0.1	2.7	12570.1	0.6
33.686572	*173.31247*	*247.56495*	*0.3383612*	*15.55406*	*29757.615*	*3.0394853*
0.5	2.6	4.0	0.0	0.2	442.9	0.0
1.4	4.1	13.1	0.0	0.5	1340.6	0.1
0.1	0.6	1.0	0.0	0.1	106.3	0.0
0.1	0.4	1.2	0.0	0.0	124.4	0.0
2.2381772	*7.7505874*	*19.388791*	*0.0226634*	*0.8409452*	*2014.2204*	*0.2019472*
0.6	1.8	6.1	0.0	0.2	746.3	0.1
9.0	27.0	87.3	0.1	2.9	11221.3	0.8
9.6562031	*28.835446*	*93.345804*	*0.1185377*	*3.1398811*	*11967.58*	*0.8712637*
0.4	1.8	3.8	0.0	0.1	999.1	0.0
0.5	1.5	5.1	0.0	0.2	574.3	0.0
0.6	2.6	4.1	0.0	0.3	415.3	0.1
0.7	3.1	4.8	0.0	0.4	482.2	0.1
0.1	0.7	0.9	0.0	0.1	102.2	0.0
1.0	2.9	2.7	0.0	0.3	271.9	0.1
1.5	6.1	9.3	0.0	0.9	876.4	0.1
2.2	6.5	6.8	0.0	0.6	727.5	0.2
1.2	3.3	10.8	0.0	0.4	1453.5	0.1
8.3882498	*28.527644*	*48.253893*	*0.0677878*	*3.117195*	*5902.2746*	*0.7568584*
0.5	1.5	5.1	0.0	0.2	574.3	0.0
0.9	4.1	6.3	0.0	0.5	643.0	0.1
0.2	0.6	2.1	0.0	0.1	309.6	0.0
0.2	0.8	1.0	0.0	0.1	113.5	0.0
0.6	1.7	1.7	0.0	0.1	185.4	0.1
0.6	1.7	1.7	0.0	0.1	185.4	0.1
0.9	2.7	2.8	0.0	0.2	299.5	0.1
0.4	1.1	1.0	0.0	0.1	100.7	0.0
0.9	2.4	7.8	0.0	0.3	1049.7	0.1
0.9	3.7	5.6	0.0	0.5	531.2	0.1
6.0798854	*20.215367*	*35.289753*	*0.0468298*	*2.2390973*	*3992.3786*	*0.5485783*
0.3	0.9	3.2	0.0	0.1	358.9	0.0
0.9	2.6	8.7	0.0	0.3	978.8	0.1
2.1	9.9	16.0	0.0	0.9	1656.1	0.2
0.6	1.8	6.1	0.0	0.2	746.3	0.1
0.4	1.8	2.3	0.0	0.2	249.9	0.0
0.3	1.5	2.5	0.0	0.1	255.2	0.0
1.7	4.9	4.5	0.0	0.4	463.2	0.2
2.1	8.5	13.0	0.0	1.2	1221.7	0.2
1.3	3.7	3.9	0.0	0.3	418.4	0.1
1.6	4.9	5.1	0.0	0.4	542.0	0.1
1.1	3.4	3.5	0.0	0.3	378.0	0.1
0.4	2.2	2.8	0.0	0.2	312.2	0.0
1.9	5.1	16.5	0.0	0.5	2220.6	0.2
14.935329	*51.236083*	*88.087749*	*0.1141545*	*5.3555289*	*9801.2954*	*1.3475909*
0.3	1.2	1.9	0.0	0.1	195.9	0.0
0.2	1.0	1.3	0.0	0.1	142.8	0.0
0.3	1.1	2.0	0.0	0.1	184.4	0.0
0.4	1.0	3.3	0.0	0.1	335.2	0.0
0.3	1.4	2.3	0.0	0.1	226.6	0.0
0.2	0.9	1.4	0.0	0.1	148.8	0.0
0.0	0.2	0.3	0.0	0.0	34.1	0.0
0.3	0.9	1.0	0.0	0.1	104.6	0.0
0.1	0.2	0.2	0.0	0.0	20.1	0.0
0.1	0.4	0.6	0.0	0.1	53.1	0.0
2.114121	*8.3485961*	*14.314413*	*0.0165847*	*0.8555146*	*1445.6072*	*0.1907538*
5.4	14.8	47.7	0.1	1.6	6419.6	0.5
2.5	6.9	22.2	0.0	0.7	2991.8	0.2
0.5	6.1	0.6	0.0	0.1	982.4	0.0
0.7	8.0	0.8	0.0	0.1	1291.3	0.0
1.3	5.0	16.9	0.0	0.5	2309.6	0.1
9.6	37.0	126.3	0.2	3.6	17225.5	0.9
19.994705	*77.737395*	*214.55093*	*0.3231867*	*6.6288566*	*31220.128*	*1.6973067*
97.1	396.0	760.8	1.0	37.7	96101.1	8.7
			lbs/day			

Gasoline Vehicle Conversion from Lbs/VMT to Lbs/Hp-hr

Type	HP	Fuel	Avg Speed Onsite mph	Avg VMT/hr	lbsVMT VOC	lbsVMT CO	EMFAC V2.3, 2007 lbsVMT Nox	lbsVMT SOx	lbsVMT PM10/2.5	lbsVMT CO2
Pickup Trucks	250	Gasoline	15	15	0.000567	0.00677	0.000684	0.00001	0.000107	1.0893
AWD Gators	25	Gasoline	15	15	0.000567	0.00677	0.000684	0.00001	0.000107	1.0893

	lbs/hr VOC	lbs/hr CO	lbs/hr Nox	lbs/hr SOx	lbs/hr PM10/2.5	lbs/hr CO2
Pickup Trucks	0.008505	0.10155	0.01026	0.00015	0.001605	16.3395
AWD Gators	0.008505	0.10155	0.01026	0.00015	0.001605	16.3395

	lbs/hp-hr	lbs/hp-hr	lbs/hp-hr	lbs/hp-hr	lbs/hp-hr	lbs/hp-hr
Pickup Trucks	0.00003402	0.0004062	0.00004104	0.0000006	0.00000642	0.065358
AWD Gators	0.0003402	0.004062	0.0004104	0.000006	0.0000642	0.65358

CONSTRUCTION PHASE - Site Prep (Grading) for Both Power Blocks and Solar Field Roads (All Phases)
MRI Level 2 Analysis (Refs 1, 3-7)

Acres Subject to Construction Grading/Earthwork Disturbance Activites:		337.2	
Max Acres Subject to Construction Disturbance Activites on any day:		34	
Emissions Factor for PM10 Uncontrolled, tons/acre/month:		0.0144	
PM2.5 fraction of PM10 (per CARB CEIDARS Profiles):		0.21	
Activity Levels:	Hrs/Day:	10	
	Days/Wk:	5	
	Days/Month:	21	
	Const Period, Months:	16	1.3 years
	Const Period, Days:	336	
Wet Season Adjustment:	(Per AP-42, Section 13.2.2, Figure 13.2.2-1, 12/03)		
	Mean # days/year with rain > = 0.01 inch:	20	
	Mean # months/yr with rain > = 0.01 inch:	0.67	
	Adjusted Const Period, Months:	15.11	
	Adjusted Const Period, Days:	309	
Controls for Fugitive Dust:			
	Proposed watering cycle:	3	times per day

SCAQMD Mitigation Measures, Table XI-A, 4/07
3 watering cycles/10 hour construction shift yields a 61% reduction, 2 watering cycles/10 hour shift should yield a 40%+ reduction.
Speed control of onsite const traffic from 35 to 15 mph yields a 57% reduction (use 50% control as conservative in desert area).

Calculated % control based on mitigations proposed:	81	% control
Conservative control % used for emissions estimates:	80	% control
	0.2	release fraction

Emissions: Controlled	PM10	PM2.5
tons/month	0.098	0.021
tons/period	1.480	0.311
Max lbs/day	9.3	1.958

Soil Handling Emissions (Cut and Fill): (2)

Total cu.yds of soil handled:		213067	Mean annual wind speed, mph:		7.8
Total tons of soil handled:		550991.262	Avg. Soil moisture, %:		5
Total days soil handled:		309	Avg. Soil density, tons/cu.yd:		1.3
Tons soil/day:		1781	k factor for PM10:		0.35
Control Eff, watering, %		80	Number of Drops per ton:		2
	Release Fraction:	0.2	Calc 1	wind	1.783
			Calc 2	moisture	3.607
Emissions:	PM10	PM2.5	Calc 3	int	0.494
tons/period	0.03	0.01	Calc 4	PM10 lb/ton	0.0006
tons/month	0.00	0.00	PM2.5 fraction of PM10:		0.210
max lbs/day	0.20	0.04			

Emissions Totals:	**PM10**	**PM2.5**
tons/period	**1.5110**	**0.3173**
tons/month	**0.1000**	**0.0210**
max lbs/day	**9.52**	**2.00**

Methodology References:

(1) MRI Report, South Coast AQMD Project No. 95040, March 1996, Level 2 Analysis Procedure.
MRI Report factor of 0.011 tons/acre/month is based on 168 hours per month of const activity.
For an activity rate of 210 hrs/month, the adjusted EF would be 0.0144 tons/acre/month.
(2) Soil Handling (Cut and Fill), EPA, AP-42, Section 13.2.4., 11/06, and Appendix E-2, Palen Solar PP, 8/09.
(3) URBEMIS, Version 9.2.4, User's Manual Appendix A, page A-6.
(4) CARB Area Source Methodology, Section 7.7, 9/02.
(5) WRAP Fugitive Dust Handbook, 9/06.
(6) USEPA, AP-42, Section 13.2.3, 2/10.
(7) Estimating PM Emissions from Construction Operations, USEPA, MRI, 9/99.
(8) Wind speed data for Blythe AP, 2002-2004.
(9) Soil data: AECOM BSPP, App E.2, 8/09. DR-Air-3, 1-6-10, Silt content-18% avg
(10) Soil Moisture; 5% avg, USGS, OFR-02-348, ADRS, 2002.

CONSTRUCTION PHASE- Erection Phase for Both Power Blocks and Fields (No earthmoving activity)
MRI Level 2 Analysis (Refs 1, 3-7)

Acres Subject to Construction Disturbance Activites:		260	
Max Acres Subject to Construction Disturbance Activites on any day:		26	
Emissions Factor for PM10 Uncontrolled, tons/acre/month:		0.023	
PM2.5 fraction of PM10 (per CARB CEIDARS Profiles):		0.21	
Activity Levels:	Hrs/Day:	16	
	Days/Wk:	5	
	Days/Month:	21	
	Const Period, Months:	30	2.5 years
	Const Period, Days:	630	
Wet Season Adjustment:	(Per AP-42, Section 13.2.2, Figure 13.2.2-1, 12/03)		
	Mean # days/year with rain > = 0.01 inch:	20	
	Mean # months/yr with rain > = 0.01 inch:	0.67	
	Adjusted Const Period, Months:	28.33	
	Adjusted Const Period, Days:	580	
Controls for Fugitive Dust:			
	Proposed watering cycle:	3	times per day

SCAQMD Mitigation Measures, Table XI-A, 4/07
3 watering cycles/10 hour construction shift yields a 61% reduction, 2 watering cycles/10 hour shift should yield a 40%+ reduction.
Speed control of onsite const traffic from 35 to 15 mph yields a 57% reduction (use 50% control as conservative in desert area).

Calculated % control based on mitigations proposed:	81	% control
Conservative control % used for emissions estimates:	80	% control
	0.2	release fraction

Emissions: Controlled	PM10	PM2.5
tons/month	0.120	0.025
tons/period	3.389	0.712
Max lbs/day	11.4	2.392

Soil Handling Emissions (Cut and Fill): (2)

Total cu.yds of soil handled:		0	Mean annual wind speed, mph:		7.8
Total tons of soil handled:		0	Avg. Soil moisture, %:		5
Total days soil handled:		580	Avg. Soil density, tons/cu.yd:		1.3
Tons soil/day:		0	k factor for PM10:		0.35
Control Eff, watering, %		80	Number of Drops per ton:		4
Release Fraction:		0.2	Calc 1	wind	1.783
			Calc 2	moisture	3.607
Emissions:	PM10	PM2.5	Calc 3	int	0.494
tons/period	0.00	0.00	Calc 4	PM10 lb/ton	0.0006
tons/month	0.00	0.00	PM2.5 fraction of PM10:		0.210
max lbs/day	0.00	0.00			

Emissions Totals:	**PM10**	**PM2.5**
tons/period	**3.3887**	**0.7116**
tons/month	**0.1196**	**0.0251**
max lbs/day	**11.39**	**2.39**

Methodology References:

(1) MRI Report, South Coast AQMD Project No. 95040, March 1996, Level 2 Analysis Procedure.
MRI Report factor of 0.011 tons/acre/month is based on 168 hours per month of const activity.
For an activity rate of 336 hrs/month, the adjusted EF would be 0.023 tons/acre/month.
(2) Soil Handling (Cut and Fill), EPA, AP-42, Section 13.2.4., 11/06, and Appendix E-2, Palen Solar PP, 8/09.
(3) URBEMIS, Version 9.2.4, User's Manual Appendix A, page A-6.
(4) CARB Area Source Methodology, Section 7.7, 9/02.
(5) WRAP Fugitive Dust Handbook, 9/06.
(6) USEPA, AP-42, Section 13.2.3, 2/10.
(7) Estimating PM Emissions from Construction Operations, USEPA, MRI, 9/99.
(8) Wind speed data for Blythe AP, 2002-2004.
(9) Soil data: AECOM BSPP, App E.2, 8/09. DR-Air-3, 1-6-10, Silt content-18% avg
(10) Soil Moisture; 5% avg, USGS, OFR-02-348, ADRS, 2002.

CONSTRUCTION PHASE - Access Road Construction
MRI Level 2 Analysis (Refs 1, 3-7)

Acres Subject to Construction Disturbance Activites:	7.6	1.25 mi length by 50 ft ROW
Max Acres Subject to Construction Disturbance Activites on any day:	1.00	
Emissions Factor for PM10 Uncontrolled, tons/acre/month:	0.0144	
PM2.5 fraction of PM10 (per CARB CEIDARS Profiles):	0.21	
Activity Levels: Hrs/Day:	10	
Days/Wk:	5	
Days/Month:	21	
Const Period, Months:	6	0.5 years
Const Period, Days:	126	
Wet Season Adjustment: (Per AP-42, Section 13.2.2, Figure 13.2.2-1, 12/03)		
Mean # days/year with rain > = 0.01 inch:	20	
Mean # months/yr with rain > = 0.01 inch:	0.67	
Adjusted Const Period, Months:	5.67	
Adjusted Const Period, Days:	116	
Controls for Fugitive Dust:		
Proposed watering cycle:	3	times per day

SCAQMD Mitigation Measures, Table XI-A, 4/07
3 watering cycles/10 hour construction shift yields a 61% reduction, 2 watering cycles/10 hour shift should yield a 40%+ reduction.
Speed control of onsite const traffic from 35 to 15 mph yields a 57% reduction (use 50% control as conservative in desert area).

Calculated % control based on mitigations proposed:	81	% control
Conservative control % used for emissions estimates:	80	% control
	0.2	release fraction

Emissions: Controlled	PM10	PM2.5
tons/month	0.003	0.001
tons/period	0.016	0.003
Max lbs/day	0.3	0.058

Soil Handling Emissions (Cut and Fill): (2)

Total cu.yds of soil handled:		0	Mean annual wind speed, mph:			7.8
Total tons of soil handled:		0	Avg. Soil moisture, %:			5
Total days soil handled:		116	Avg. Soil density, tons/cu.yd:			1.3
Tons soil/day:		0	k factor for PM10:			0.35
Control Eff, watering, %		80	Number of Drops per ton:			2
Release Fraction:		0.2	Calc 1	wind		1.783
			Calc 2	moisture		3.607
Emissions:	PM10	PM2.5	Calc 3	int		0.494
tons/period	0.00	0.00	Calc 4	PM10	lb/ton	0.0006
tons/month	0.00	0.00	PM2.5 fraction of PM10:			0.210
max lbs/day	0.00	0.00				

Emissions Totals:

	PM10	**PM2.5**
tons/period	**0.0163**	**0.0034**
tons/month	**0.0029**	**0.0006**
max lbs/day	**0.27**	**0.06**

Methodology References:

(1) MRI Report, South Coast AQMD Project No. 95040, March 1996, Level 2 Analysis Procedure.
MRI Report factor of 0.011 tons/acre/month is based on 168 hours per month of const activity.
For an activity rate of 210 hrs/month, the adjusted EF would be 0.0144 tons/acre/month.
(2) Soil Handling (Cut and Fill), EPA, AP-42, Section 13.2.4., 11/06, and Appendix E-2, Palen Solar PP, 8/09.
(3) URBEMIS, Version 9.2.4, User's Manual Appendix A, page A-6.
(4) CARB Area Source Methodology, Section 7.7, 9/02.
(5) WRAP Fugitive Dust Handbook, 9/06.
(6) USEPA, AP-42, Section 13.2.3, 2/10.
(7) Estimating PM Emissions from Construction Operations, USEPA, MRI, 9/99.
(8) Wind speed data for Blythe AP, 2002-2004.
(9) Soil data: AECOM BSPP, App E.2, 8/09. DR-Air-3, 1-6-10, Silt content-18% avg
(10) Soil Moisture; 5% avg, USGS, OFR-02-348, ADRS, 2002.
(11) paved road will be 2-12 ft lanes, 24 ft wide with minimal shoulders in a 50 ft ROW

CONSTRUCTION PHASE - Underground Gas Line

MRI Level 2 Analysis (Refs 1, 3-7)

Acres Subject to Construction Disturbance Activites:		3.82	
Max Acres Subject to Construction Disturbance Activites on any day:		0.38	
Emissions Factor for PM10 Uncontrolled, tons/acre/month:		0.0144	
PM2.5 fraction of PM10 (per CARB CEIDARS Profiles):		0.21	
Activity Levels:	Hrs/Day:	10	
	Days/Wk:	5	
	Days/Month:	21	
	Const Period, Months:	8	0.7 years
	Const Period, Days:	168	
Wet Season Adjustment:	(Per AP-42, Section 13.2.2, Figure 13.2.2-1, 12/03)		
	Mean # days/year with rain > = 0.01 inch:	20	
	Mean # months/yr with rain > = 0.01 inch:	0.67	
	Adjusted Const Period, Months:	7.56	
	Adjusted Const Period, Days:	155	
Controls for Fugitive Dust:			
	Proposed watering cycle:	3	times per day

SCAQMD Mitigation Measures, Table XI-A, 4/07

3 watering cycles/10 hour construction shift yields a 61% reduction, 2 watering cycles/10 hour shift should yield a 40%+ reduction.

Speed control of onsite const traffic from 35 to 15 mph yields a 57% reduction (use 50% control as conservative in desert area).

Calculated % control based on mitigations proposed:	81	% control
Conservative control % used for emissions estimates:	80	% control
	0.2	release fraction

Emissions: Controlled	PM10	PM2.5
tons/month	0.001	0.000
tons/period	0.008	0.002
Max lbs/day	0.1	0.022

Soil Handling Emissions (Cut and Fill): (2)

Total cu.yds of soil handled:		5400	Mean annual wind speed, mph:			7.8
Total tons of soil handled:		13964.4	Avg. Soil moisture, %:			5
Total days soil handled:		155	Avg. Soil density, tons/cu.yd:			1.3
Tons soil/day:		90	k factor for PM10:			0.35
Control Eff, watering, %		80	Number of Drops per ton:			2
Release Fraction:		0.2	Calc 1	wind		1.783
			Calc 2	moisture		3.607
Emissions:	PM10	PM2.5	Calc 3	int		0.494
tons/period	0.00	0.00	Calc 4	PM10	lb/ton	0.0006
tons/month	0.00	0.00	PM2.5 fraction of PM10:			0.210
max lbs/day	0.01	0.00				

Fraction of gas line onsite: 0.97

Emissions Totals:

	PM10	**PM2.5**
tons/period	**0.0091**	**0.0019**
tons/month	**0.0012**	**0.0003**
max lbs/day	**0.11**	**0.02**

Methodology References:

(1) MRI Report, South Coast AQMD Project No. 95040, March 1996, Level 2 Analysis Procedure.
MRI Report factor of 0.011 tons/acre/month is based on 168 hours per month of const activity.
For an activity rate of 210 hrs/month, the adjusted EF would be 0.0144 tons/acre/month.
(2) Soil Handling (Cut and Fill), EPA, AP-42, Section 13.2.4., 11/06, and Appendix E-2, Palen Solar PP, 8/09.
(3) URBEMIS, Version 9.2.4, User's Manual Appendix A, page A-6.
(4) CARB Area Source Methodology, Section 7.7, 9/02.
(5) WRAP Fugitive Dust Handbook, 9/06.
(6) USEPA, AP-42, Section 13.2.3, 2/10.
(7) Estimating PM Emissions from Construction Operations, USEPA, MRI, 9/99.
(8) Wind speed data for Blythe AP, 2002-2004.
(9) Soil data: AECOM BSPP, App E.2, 8/09. DR-Air-3, 1-6-10, Silt content-18% avg
(10) Soil Moisture; 5% avg, USGS, OFR-02-348, ADRS, 2002.
(11) acreage based on trench ROW dimensions, cut and fill based on trench dimensions

CONSTRUCTION PHASE - Underground T-Line
MRI Level 2 Analysis (Refs 1, 3-7)

Acres Subject to Construction Disturbance Activites:		3.35	
Max Acres Subject to Construction Disturbance Activites on any day:		0.34	
Emissions Factor for PM10 Uncontrolled, tons/acre/month:		0.0144	
PM2.5 fraction of PM10 (per CARB CEIDARS Profiles):		0.21	
Activity Levels:	Hrs/Day:	10	
	Days/Wk:	5	
	Days/Month:	21	
	Const Period, Months:	11	0.9 years
	Const Period, Days:	231	
Wet Season Adjustment:	(Per AP-42, Section 13.2.2, Figure 13.2.2-1, 12/03)		
	Mean # days/year with rain > = 0.01 inch:	20	
	Mean # months/yr with rain > = 0.01 inch:	0.67	
	Adjusted Const Period, Months:	10.39	
	Adjusted Const Period, Days:	213	
Controls for Fugitive Dust:			
	Proposed watering cycle:	3	times per day

SCAQMD Mitigation Measures, Table XI-A, 4/07
3 watering cycles/10 hour construction shift yields a 61% reduction, 2 watering cycles/10 hour shift should yield a 40%+ reduction.
Speed control of onsite const traffic from 35 to 15 mph yields a 57% reduction (use 50% control as conservative in desert area).

Calculated % control based on mitigations proposed:	81	% control
Conservative control % used for emissions estimates:	80	% control
	0.2	release fraction

Emissions: Controlled	PM10	PM2.5
tons/month	0.001	0.000
tons/period	0.010	0.002
Max lbs/day	0.1	0.020

Soil Handling Emissions (Cut and Fill): (2)

Total cu.yds of soil handled:		49363	Mean annual wind speed, mph:			7.8
Total tons of soil handled:		127652.718	Avg. Soil moisture, %:			5
Total days soil handled:		213	Avg. Soil density, tons/cu.yd:			1.3
Tons soil/day:		600	k factor for PM10:			0.35
Control Eff, watering, %		80	Number of Drops per ton:			2
	Release Fraction:	0.2	Calc 1	wind		1.783
			Calc 2	moisture		3.607
Emissions:	PM10	PM2.5	Calc 3	int		0.494
tons/period	0.01	0.00	Calc 4	PM10	lb/ton	0.0006
tons/month	0.00	0.00	PM2.5 fraction of PM10:			0.210
max lbs/day	0.07	0.01				

Fraction of T-line onsite: 1.00

Emissions Totals:

	PM10	**PM2.5**
tons/period	**0.0174**	**0.0037**
tons/month	**0.0017**	**0.0004**
max lbs/day	**0.16**	**0.03**

Methodology References:

(1) MRI Report, South Coast AQMD Project No. 95040, March 1996, Level 2 Analysis Procedure.
MRI Report factor of 0.011 tons/acre/month is based on 168 hours per month of const activity.
For an activity rate of 210 hrs/month, the adjusted EF would be 0.0144 tons/acre/month.
(2) Soil Handling (Cut and Fill), EPA, AP-42, Section 13.2.4., 11/06, and Appendix E-2, Palen Solar PP, 8/09.
(3) URBEMIS, Version 9.2.4, User's Manual Appendix A, page A-6.
(4) CARB Area Source Methodology, Section 7.7, 9/02.
(5) WRAP Fugitive Dust Handbook, 9/06.
(6) USEPA, AP-42, Section 13.2.3, 2/10.
(7) Estimating PM Emissions from Construction Operations, USEPA, MRI, 9/99.
(8) Wind speed data for Blythe AP, 2002-2004.
(9) Soil data: AECOM BSPP, App E.2, 8/09. DR-Air-3, 1-6-10, Silt content-18% avg
(10) Soil Moisture; 5% avg, USGS, OFR-02-348, ADRS, 2002.
(11) acreage based on trench ROW dimensions, cut and fill based on trench dimensions

OFFSITE PAVED ROAD FUGITIVE DUST EMISSIONS
(associated with delivery truck and worker vehicle traffic on I-10 and plant access road)

Average mileage for construction related vehicles:		75	miles, roundtrip distance***
Avg weight of vehicular equipment on road:		3.5	tons (range 2 - 42 tons)
Road surface silt loading factor:		0.03	g/m2 (range 0.03 - 400 g/m2)
			Limited Access Freeway >10,000 ADT (I-10)
Particle size multiplier factors:	PM10	0.016	lb/VMT
	PM2.5	0.0024	lb/VMT
C factors (brake and tire wear):	PM10	0.00047	lb/VMT
	PM2.5	0.00036	lb/VMT
Avg vehicle speed on road:		65	mph
Number of vehicles per day:		621	*
Number of work days per month:		21	
Total vehicles per month:		13041	
Number of work months:		31.2	adjusted for precip events
Total vehicles per const period:		406879.2	

		VMT/day:	46575
		VMT/month:	978075
		VMT/period:	30515940

	PM10	
Calc 1	0.035	
Calc 2	1.131	
Calc 3	0.0002	lb/VMT

Emissions	PM10	PM2.5
lbs/day	7.40	1.25
lbs/month	155.37	26.26
lbs/period	4847.61	819.25
tons/period	2.42	0.41

*see vehicle total on Weight tab
EPA, AP-42, Section 13.2.1, March 2006, updated 9/2008.
PM2.5 fraction of PM10 per CARB CEIDARs is 0.169
*** Note: avg roundtrip distance traveled by delivery or worker vehicles on limited access freeways (I-10)
Delivery Route: from Blythe urban area or Blythe ATSF railyard to site, includes plant paved access road

ONSITE PAVED ROAD FUGITIVE DUST EMISSIONS
(associated with construction equipment traffic)

Length of Paved Road used for/by Construction Access:		6.3	miles*		
Avg weight of construction vehicular equipment on road:		10	tons (range 2 - 42 tons)		
Road surface silt loading factor:		0.06	g/m2 (range 0.03 - 400 g/m2)		
Particle size multiplier factors:	PM10	0.016	lb/VMT		
	PM2.5	0.0024	lb/VMT		
C factors (brake and tire wear):	PM10	0.00047	lb/VMT		
	PM2.5	0.00036	lb/VMT		
Avg construction vehicle speed on onsite road:		15	mph (range 10-55 mph)		
Number of construction vehicles per day:		80	**	VMT/day:	504
				VMT/month:	10584
Number of construction work days per month:		21		VMT/period:	330220.8
Total vehicles per month:		1680			
Number of construction work months:		31.2	adjusted for precip events		
Total vehicles per const period:		52416			

	PM10	
Calc 1	0.060	
Calc 2	2.620	
Calc 3	0.0021	lb/VMT

Emissions	PM10	PM2.5
lbs/day	1.04	0.18
lbs/month	21.86	3.70
lbs/period	682.18	115.29
tons/period	0.34	0.06

*total mileage of onsite paved roads. Since these roads will be used to access the power block areas and portions of the heliostat fields under installation, it was assumed that all of these roads would be used on an average daily basis.
** delivery vehicles plus onsite const support equipment, worker vehicles will not be traversing the site
EPA, AP-42, Section 13.2.1, March 2006, updated 9/2008.
PM2.5 fraction of PM10 per CARB CEIDARs is 0.169

Fugitive Dust from Wind Erosion of Soil Storage Piles

Grading Phase Only for both Power Blocks and Solar Fields

Avg acres of soil storage piles exposed per day:	5	*	
Soil silt content, %:	18.3		0.183
Number of days/year with precipitation >0.01 inches:	20		
Annual % of time wind speed greater than 12 mph:	20.6		0.206
Watering control efficiency, %:	80		0.8
PM10 aerodynamic factor:	0.5		
PM2.5 aerodynamic factor:	0.2		
Total construction period exposure time, days:	336		

	lb/acre-day	lbs/day	lbs/period	tons/period
PM10	0.104	0.520	174.6	0.087
PM2.5	0.042	0.208	69.9	0.035

MDAQMD, Emissions Inventory Guidance, Mineral Handling and Processing Industries, April 2000.
USEPA, AP-42, Section 13.2.2, Unpaved Roads, Figure 13.2.2-1, Thornethwaite Precipitation Data.
*soil storage areas only, open cut and fill areas are not soil storage areas.

ONSITE UNPAVED ROAD FUGITIVE DUST

Length of Unpaved Road used for/by Construction Access: (in the heliostat fields)	2	miles*
Avg weight of construction vehicular equipment on road:	10	tons (range 2 - 42 tons)
Road surface silt content:	18	% (range 1.8 - 35%)
Road surface material moisture content:	5	% (range 0.03 - 13%)

		k	a	c	d
Particle size multiplier factors:	PM10	1.8	1	0.2	0.5
	PM2.5	0.18	1	0.2	0.5

C factors (brake and tire wear):	PM10	0.00047	lb/VMT
	PM2.5	0.00036	lb/VMT

Avg construction vehicle speed on road:	5	mph (range 5-55 mph)

Number of construction vehicles per day:	25	**	VMT/day:	50
			VMT/month:	1050
Number of construction work days per month:	21		VMT/period:	29746.5
Total vehicles per month:	525			
Number of construction work months:	28.33	adjusted for precipitation events		
Total vehicles per const period:	14873.25			
Control reduction due to watering, speed control, etc. =	80			
	0.8			
Release Fraction =	0.2			

	PM10	PM2.5
Calc 1	1.500	1.500
Calc 2	0.408	0.408
Calc 3	1.585	1.585
Calc 4	0.695	0.070
Uncontrolled lb/VMT	0.695	0.069

Emissions	PM10	PM2.5
lbs/day	6.95	0.69
lbs/month	145.95	14.53
lbs/period	4134.86	411.62
tons/period	2.07	0.21

EPA, AP-42, Section 13.2.2, March 2006
Soil Moisture; 5% avg, USGS, OFR-02-348, ADRS, 2002.
Soil data: AECOM BSPP, App E.2, 8/09. DR-Air-3, 1-6-10, Silt content-18% avg, for road sfc used 8.5% per EPA-AP42
*total mileage of onsite unpaved roads is 19.8 miles, but less than 10% will be used on any given day during installation
** heliostat installation equipment, avg daily value

OFFSITE UNPAVED ROAD FUGITIVE DUST

Length of Unpaved Road used for/by Construction Access:		0	miles*		
Avg weight of construction vehicular equipment on road:		0	tons (range 2 - 42 tons)		
Road surface silt content:		18	% (range 1.8 - 35%), rolled gravel surface		
Road surface material moisture content:		5	% (range 0.03 - 13%)		
		k	a	c	d
Particle size multiplier factors:	PM10	1.8	1	0.2	0.5
	PM2.5	0.18	1	0.2	0.5
C factors (brake and tire wear):	PM10	0.00047	lb/VMT		
	PM2.5	0.00036	lb/VMT		
Avg construction vehicle speed on road:		15	mph (range 10-55 mph)		
Number of construction vehicles per day:		0	**	VMT/day:	0
				VMT/month:	0
Number of construction work days per month:		0		VMT/period:	0
Total vehicles per month:		0			
Number of construction work months:		0			
Total vehicles per const period:		0			
Control reduction due to watering, speed control, etc. =		80			
		0.8			
Release Fraction =		0.2			

	PM10	PM2.5
Calc 1	1.500	1.500
Calc 2	0.707	0.707
Calc 3	1.585	1.585
Calc 4	1.205	0.120
Uncontrolled lb/VMT	1.204	0.120

Emissions	PM10	PM2.5
lbs/day	0.00	0.00
lbs/month	0.00	0.00
lbs/period	0.00	0.00
tons/period	0.00	0.00

EPA, AP-42, Section 13.2.2, March 2006
Soil Moisture; 5% avg, USGS, OFR-02-348, ADRS, 2002.
Soil data: AECOM BSPP, App E.2, 8/09. DR-Air-3, 1-6-10, Silt content-18% avg
*no offsite unpaved roads will be used during construction
** delivery and worker vehicles plus support staff

CONSTRUCTION PHASE - Trackout Emissions

Paved Road Length (miles):	0.1	estimated roundtrip trackout distance			
Daily # of Vehicles:	50				
Avg Vehicle Weight (tons):	23.0		**PM10**	**PM2.5***	
Total Unadjusted VMT/day	5.0		0.361		
Particle Size Multipliers	PM10		5.101		
lb/VMT	0.023		0.008	0.0014	lb/VMT
C factor, lb/VMT	0.00047		0.293	0.0496	**lbs/day**
Road Sfc Silt Loading (g/m^2):	0.56	local X 2	0.003	0.0005	**tons/month**
# of Active Trackout Points:	1	**	0.10	0.0162	**tons/period**
Added Trackout Miles:	PM10				
Trackout VMT/day:	30		*Default Silt Load Values for Paved Road Types*		
Final Adjusted VMT/day	35		Freeway	0.02 g/m2	
Final Adjusted VMT/month	735		Arterial	0.036 g/m2	
Final Adjusted VMT/period	22932		Collector	0.036 g/m2	
Construction days/month:	21		Local	0.28 g/m2	
Adj. Construction months/period:	31.20		Rural	1.6 g/m2	
Control Applied to Trackout:	Sweeping and Cleaning (water washing)				
Control Efficiency, %	80	0.8	Release Factor =	0.2	

* PM2.5 fraction of PM10 assumed to be 0.169 (CARB CEIDARS updated fraction values) for paved roads.
** 1 controlled ingress/egress point is planned for site construction
EPA, AP-42, Section 13.2.1, Proposed revisions dated 9/2008.
Use silt loading factor from default values for road type if no site specific data is available.
Trackout effects approximately 0.05 mi. of roadway arriving and departing from the site access point.
Plant access road will be paved prior to main site construction period.
Vehicle count = delivery trucks plus 10 misc support vehicles X 2
Worker vehicles not counted for trackout, as they do not access main site.

Onsite Concrete Batch Plant Emissions Estinates

Ref: AP-42, Section 11.12, June 2006
EFs from Table 11.12-6, Central Mix Plant Type

Months concrete batch plant onsite:	14	months 4-17	
Avg workdays per month:	21		
Total concrete production workdays/period:	294		
Total deliveries per period:	3488		
Avg truck capacity, cu.yds:	9		
Total concrete produced onsite per period:	31392	cu.yds.	
Proposed controls: water spray, drop point enclosures, covered conveyors			
Controlled PM10 EF for raw materials input:	0.0153	lbs/cu.yd	
Central Mix Plant EF:	0.0043146	lbs/cu.yd	Eq. 11.12-2

Total EF: 0.0196 lbs/cu.yd.

			PM2.5
Period PM10 Emissions:	615.7	lbs	62.8
	0.31	tons	0.03

			PM2.5
Avg daily PM10 Emissions:	2.09	lbs	0.21

Total site concrete requirements:	58000	cu.yds.
Onsite:	31392	cu.yds.
Offsite:	26608	cu.yds.

CONSTRUCTION PHASE - Truck Hauling/Delivery and Site Support Vehicle Emissions

All Phases

Delivery/Hauling Vehicle Use Rates

Delivery Roundtrip Distance:	75	miles
Const Days per Period:	693	
Avg Deliveries per Day:	15	
Fraction of Deliveries-Diesel:	0.85	HDDT
Fraction of Deliveries-Gas:	0.15	MDGT
Total Delivery VMT:	779625	
Total Daily VMT-Diesel	956	
Total Daily VMT-Gasoline	169	
Total Period VMT-Diesel	662681.25	
Total Period VMT-Gasoline	116943.75	

Emissions Factors (lbs/vmt)

NOx	CO	VOC	SOx	PM10	CO2	
0.020568	0.006521	0.001482	0.000037	0.000958	4.0073	HDDT
0.001246	0.00818	0.000772	0.000015	0.000108	1.4979	MDGT

Daily Emissions (lbs)

NOx	CO	VOC	SOx	PM10	CO2	PM2.5	
19.668	**6.236**	**1.417**	**0.035**	**0.916**	**3831.981**	**0.908**	HDDT
0.210	1.380	0.130	0.003	0.018	252.771	0.018	MDGT

Tons per Const Period

6.815	2.161	0.491	0.012	0.317	1327.8	0.315	HDDT
0.073	0.478	0.045	0.001	0.006	87.6	0.006	MDGT

Construction Site Support Vehicle Use Rates (LDTs)

Gasoline Vehicle VMT Period:	166320
Avg Daily Gasoline VMT:	240
Diesel Vehicle VMT Period:	34650
Avg Daily Diesel VMT:	50
Total Phase Const Days:	693

Daily Emissions, lbs

NOx	CO	VOC	SOx	PM10	CO2			PM2.5
0.000684	0.00677	0.000567	0.00001	0.000107	1.0893	lbs/vmt*	LDT gasoline	
0.000035	0.000013	0.000002	0.000001	0.000002	0.0084	lbs/vmt*	LDT diesel	
0.1642	**1.6248**	**0.1361**	**0.0024**	**0.0257**	**261.4320**	**lbs/day**	**gasoline**	**0.0256**
0.0018	**0.0007**	**0.0001**	**0.0001**	**0.0001**	**0.4200**	**lbs/day**	**diesel**	**0.0001**

Tons per Const Period

0.0569	0.5630	0.0472	0.0008	0.0089	90.6	**tons/period**	**gasoline**	0.0089
0.0006	0.0002	0.0000	0.0000	0.0000	0.1	**tons/period**	**diesel**	0.0000

Ref: Riverside County, Emfac 2007, V2.3, Nov 2006
On-Road Heavy Duty Diesels (1970-2014)
On Road Medium Duty Gas (1970-2014)
LDTs (1970-2014)

Notes ***

VMT for delivery/hauling for all vehicles includes: (1) materials deliveries to site, (2) materials removal from site, other VMT as specified below.
Support Vehicle VMT: best estimate at time of filing, 8 gasoline LDTs at 30 miles per day each, and 2 diesel LDTs at 25 miles per day each.
Delivery Route: Blythe urban or railyard area to site, 75 miles roundtrip.
CARB-CEIDARS, Updated Fractions for PM Profiles: PM2.5 = 0.991 of PM10 for Diesel Exhaust, and 0.998 for Gasoline Vehicles.
Const days per period: 21 days per month at 33 months = 693

CONSTRUCTION PHASE - Worker Travel - Emissions

Ref: Riverside County, Emfac 2007, V2.3, Nov 2006
On Road Vehicles (1970-2014)
LDP/LDT Weighted Avg Efs

All Phases

Worker Travel to Site

Avg Occupancy/Vehicle:	1	
Avg Roundtrip Distance, miles:	75	
Avg # of Worker Vehicles, per day:	596	*
Avg Daily Worker VMT:	44700	
Max # of Worker Vehicles, per day:	1380	*
Max Daily Worker VMT:	103500	
Total Const Days:	693	
Total Const Period Worker VMT:	30977100	

Emissions Factors (lbs/VMT)

NOx	CO	VOC	SOx	PM10	CO2
0.00049	0.00548	0.00047	0.00001	0.00009	0.95934

Daily Emissions (lbs)

	NOx	CO	VOC	SOx	PM10	CO2	PM2.5
Avg	21.90	244.96	21.01	0.45	4.02	42882.50	4.01
Max	50.72	567.18	48.65	1.04	9.32	99291.69	9.30

Tons per Const Period

Avg	7.589	84.877	7.280	0.155	1.394	14858.8	1.391

Worker Travel by Busing from Staging Area

Total Bus VMT/Const Period:	0	Bus Round Trips/Day:	0	max
Avg Bus VMT/Const Day:	0	Bus Occupancy/Trip:	0	
Max Bus VMT/Const Day:	0			
Distance to site from Bus staging area:	0	miles (roundtrip)		

Ref: Riverside County, Emfac 2007, V2.3, Nov 2006
On Road Vehicles (1970-2014)
Bus Carriers

(AFC Traffic and Transportation Section)

Emissions Factors (lbs/VMT)

NOx	CO	VOC	SOx	PM10	CO2
0.019574	0.033191	0.003404	0.000426	0.000426	3.4043

Round trip distance: 75 miles from the Blythe urban area.

Daily Emissions (lbs)

	NOx	**CO**	**VOC**	**SOx**	**PM10**	**CO2**	**PM2.5**
Avg	0.00	0.00	0.00	0.00	0.00	0.00	0.00

Tons per Const Period

Avg	0.000	0.000	0.000	0.000	0.000	0.000	0.000

CO2e Emissions Estimates

	Total All Construction Phases	
For CO2 Estimated Emissions Only	1551	
Total CO2 emisisons from diesel combustion:	34629.9	tons/period
Total CO2 emissions from gasoline combustion:	15037	tons/period
Approximate methane fraction of CO2 for diesel combustion:		0.000051
Approximate N2O fraction of CO2 for diesel combustion:		0.000032
Approximate methane fraction of CO2 for gasoline combustion:		0.000213
Approximate N2O fraction of CO2 for gasoline combustion:		0.000113
Estimated methane from diesel combustion:	1.7661249	tons/period
Estimated N2O from diesel combustion:	1.1081568	tons/period
Estimated methane from gasoline combustion:	3.202881	tons/period
Estimated N2O from diesel combustion:	1.699181	tons/period
Estimated methane CO2e from diesel combustion:	37.088623	tons/period
Estimated N2O CO2e from diesel combustion:	343.52861	tons/period
Estimated methane CO2e from gasoline combustion:	67.260501	tons/period
Estimated N2O CO2e from gasoline combustion:	526.74611	tons/period

Partial CO2e emissions from construction: 50642 tons/period

For GHG Where All Species are Estimated

CO2	0	tons/period
CH4	3	tons/period
N2O	0	tons/period

Adjusted GWP Rates

CO2	0	tons/period
CH4	63	tons/period
N2O	0	tons/period
CO2e	63	tons/period

Total CO2e emissions from construction: 50705 tons/period

46095 metric tons/period

CCAR General Protocol, January 2009, Version 3.1.
IPCC SAR values for methane and N2O.

Average Vehicle Weight Estimate for Construction Period

Vehicle Type	Weight tons	# Vehicles per day	Frac. of total vehicles	
Passenger LDP/LDT	2.5	606	0.953	Worker and support travel vehicles
HDD Loaded	35	13	0.020	
HDD Unloaded	15	13	0.020	Materials delivery trucks, service
MDGT Loaded	15	2	0.003	trucks, fuel trucks, other misc trucks.
MDGT Unloaded	5	2	0.003	
		636	1.000	
Vehicle Total		621		

Weighted Avg Vehicle Weight, tons : 3.5

Ref: AP-42, Section 13.2.2, 11/06, mean vehicle weight guidance, p.13.2.2-6.

Delivery Vehicles Only			
HDD Loaded	35	13	0.433
HDD Unloaded	15	13	0.433
MDGT Loaded	15	2	0.067
MDGT Unloaded	5	2	0.067
		30	1

Weighted Avg Vehicle Weight, tons : 23

Fleet Average Emission Factors (Diesel)

2013

Air Basin	SC

		(lb/hr)	(lb/hr)	(lb/hr)	(lb/hr)	(lb/hr)	(lb/hr)	(lb/hr)	LBS/HP-HR						
Equipment	MaxHP	ROG	CO	NOX	SOX	PM	CO2	CH4	ROG	CO	NOX	SOX	PM	CO2	CH4
Aerial Lifts	15	0.0101	0.0528	0.0637	0.0001	0.0027	8.7	0.0009	0.0007	0.0035	0.0042	0.000009	0.0002	0.5768	0.000061
	25	0.0166	0.0503	0.0937	0.0001	0.0051	11.0	0.0015	0.0007	0.0020	0.0037	0.000006	0.0002	0.4384	0.000060
	50	0.0592	0.1757	0.1840	0.0003	0.0156	19.6	0.0053	0.0012	0.0035	0.0037	0.000005	0.0003	0.3923	0.000107
	120	0.0558	0.2425	0.3758	0.0004	0.0299	38.1	0.0050	0.0005	0.0020	0.0031	0.000004	0.0002	0.3173	0.000042
	500	0.1191	0.4671	1.5310	0.0021	0.0448	213	0.0107	0.0002	0.0009	0.0031	0.000004	0.0001	0.4257	0.000021
	750	0.2221	0.8443	2.8534	0.0039	0.0825	385	0.0200	0.0003	0.0011	0.0038	0.000005	0.0001	0.5130	0.000027
Aerial Lifts Total		0.0529	0.1925	0.3059	0.0004	0.0202	34.7	0.0048							
Air Compressors	15	0.0122	0.0484	0.0732	0.0001	0.0048	7.2	0.0011	0.0008	0.0032	0.0049	0.000007	0.0003	0.4815	0.000073
	25	0.0266	0.0744	0.1306	0.0002	0.0081	14.4	0.0024	0.0011	0.0030	0.0052	0.000007	0.0003	0.5778	0.000096
	50	0.0921	0.2546	0.2221	0.0003	0.0220	22.3	0.0083	0.0018	0.0051	0.0044	0.000006	0.0004	0.4454	0.000166
	120	0.0825	0.3251	0.4991	0.0006	0.0456	47.0	0.0074	0.0007	0.0027	0.0042	0.000005	0.0004	0.3913	0.000062
	175	0.1059	0.5054	0.8385	0.0010	0.0472	88.5	0.0096	0.0006	0.0029	0.0048	0.000006	0.0003	0.5056	0.000055
	250	0.1007	0.2955	1.1320	0.0015	0.0347	131	0.0091	0.0004	0.0012	0.0045	0.000006	0.0001	0.5249	0.000036
	500	0.1626	0.5399	1.7639	0.0023	0.0570	232	0.0147	0.0003	0.0011	0.0035	0.000005	0.0001	0.4635	0.000029
	750	0.2547	0.8344	2.8139	0.0036	0.0898	358	0.0230	0.0003	0.0011	0.0038	0.000005	0.0001	0.4775	0.000031
	1000	0.4190	1.4213	5.0841	0.0049	0.1474	486	0.0378	0.0004	0.0014	0.0051	0.000005	0.0001	0.4864	0.000038
Air Compressors Total		0.0913	0.3376	0.6065	0.0007	0.0434	63.6	0.0082							
Bore/Drill Rigs	15	0.0120	0.0632	0.0754	0.0002	0.0029	10.3	0.0011	0.0008	0.0042	0.0050	0.000011	0.0002	0.6897	0.000072
	25	0.0193	0.0658	0.1226	0.0002	0.0049	16.0	0.0017	0.0008	0.0026	0.0049	0.000008	0.0002	0.6395	0.000070
	50	0.0289	0.2282	0.2568	0.0004	0.0120	31.0	0.0026	0.0006	0.0046	0.0051	0.000008	0.0002	0.6207	0.000052
	120	0.0447	0.4698	0.4583	0.0009	0.0257	77.1	0.0040	0.0004	0.0039	0.0038	0.000008	0.0002	0.6427	0.000034
	175	0.0704	0.7538	0.6931	0.0016	0.0302	141	0.0063	0.0004	0.0043	0.0040	0.000009	0.0002	0.8062	0.000036
	250	0.0795	0.3429	0.7632	0.0021	0.0221	188	0.0072	0.0003	0.0014	0.0031	0.000008	0.0001	0.7524	0.000029
	500	0.1295	0.5517	1.1717	0.0031	0.0361	311	0.0117	0.0003	0.0011	0.0023	0.000006	0.0001	0.6226	0.000023
	750	0.2565	1.0899	2.3376	0.0062	0.0715	615	0.0231	0.0003	0.0015	0.0031	0.000008	0.0001	0.8201	0.000031
	1000	0.4163	1.6675	5.9553	0.0093	0.1544	928	0.0376	0.0004	0.0017	0.0060	0.000009	0.0002	0.9283	0.000038
Bore/Drill Rigs Total		0.0786	0.5044	0.8125	0.0017	0.0302	165	0.0071							
Cement and Mortar	15	0.0074	0.0386	0.0470	0.0001	0.0021	6.3	0.0007	0.0005	0.0026	0.0031	0.000007	0.0001	0.4213	0.000045
	25	0.0270	0.0813	0.1510	0.0002	0.0083	17.6	0.0024	0.0011	0.0033	0.0060	0.000009	0.0003	0.7022	0.000098
Cement and Mortar Mixers Total		0.0091	0.0421	0.0556	0.0001	0.0026	7.2	0.0008							
Concrete/Industrial	25	0.0199	0.0678	0.1257	0.0002	0.0049	16.5	0.0018	0.0008	0.0027	0.0050	0.000008	0.0002	0.6591	0.000072
	50	0.0955	0.2918	0.2858	0.0004	0.0247	30.2	0.0086	0.0019	0.0058	0.0057	0.000008	0.0005	0.6042	0.000172
	120	0.1065	0.4836	0.7154	0.0009	0.0589	74.1	0.0096	0.0009	0.0040	0.0060	0.000007	0.0005	0.6179	0.000080
	175	0.1569	0.8701	1.3612	0.0018	0.0706	160	0.0142	0.0009	0.0050	0.0078	0.000010	0.0004	0.9154	0.000081
Concrete/Industrial Saws Total		0.1002	0.4088	0.5572	0.0007	0.0452	58.5	0.0090							
Cranes	50	0.1015	0.2892	0.2394	0.0003	0.0239	23.2	0.0092	0.0020	0.0058	0.0048	0.000006	0.0005	0.4637	0.000183
	120	0.0919	0.3618	0.5508	0.0006	0.0493	50.1	0.0083	0.0008	0.0030	0.0046	0.000005	0.0004	0.4179	0.000069
	175	0.1031	0.4821	0.7769	0.0009	0.0445	80.3	0.0093	0.0006	0.0028	0.0044	0.000005	0.0003	0.4591	0.000053
	250	0.1040	0.2948	0.9948	0.0013	0.0351	112	0.0094	0.0004	0.0012	0.0040	0.000005	0.0001	0.4486	0.000038
	500	0.1551	0.5292	1.4230	0.0018	0.0518	180	0.0140	0.0003	0.0011	0.0028	0.000004	0.0001	0.3602	0.000028
	750	0.2625	0.8887	2.4614	0.0030	0.0885	303	0.0237	0.0003	0.0012	0.0033	0.000004	0.0001	0.4041	0.000032
	9999	0.9491	3.3249	10.3665	0.0098	0.3189	971	0.0856							
Cranes Total		0.1348	0.4737	1.1934	0.0014	0.0508	129	0.0122							

Crawler Tractors	50	0.1176	0.3246	0.2627	0.0003	0.0270	24.9	0.0106	0.0024	0.0065	0.0053	0.000006	0.0005	0.4976	0.000212
	120	0.1293	0.4858	0.7686	0.0008	0.0677	65.8	0.0117	0.0011	0.0040	0.0064	0.000006	0.0006	0.5484	0.000097
	175	0.1674	0.7448	1.2529	0.0014	0.0713	121	0.0151	0.0010	0.0043	0.0072	0.000008	0.0004	0.6925	0.000086
	250	0.1764	0.5000	1.5945	0.0019	0.0613	166	0.0159	0.0007	0.0020	0.0064	0.000007	0.0002	0.6645	0.000064
	500	0.2542	0.9504	2.2389	0.0025	0.0868	259	0.0229	0.0005	0.0019	0.0045	0.000005	0.0002	0.5185	0.000046
	750	0.4574	1.6983	4.1042	0.0047	0.1573	465	0.0413	0.0006	0.0023	0.0055	0.000006	0.0002	0.6196	0.000055
	1000	0.6901	2.6950	7.3731	0.0066	0.2361	658	0.0623	0.0007	0.0027	0.0074	0.000007	0.0002	0.6581	0.000062
Crawler Tractors Total		0.1584	0.5900	1.1593	0.0013	0.0697	114	0.0143							
Crushing/Proc. Equ	50	0.1741	0.5009	0.4359	0.0006	0.0422	44.0	0.0157	0.0035	0.0100	0.0087	0.000011	0.0008	0.8803	0.000314
	120	0.1402	0.5764	0.8552	0.0010	0.0779	83.1	0.0127	0.0012	0.0048	0.0071	0.000008	0.0006	0.6928	0.000105
	175	0.1942	0.9615	1.5237	0.0019	0.0864	167	0.0175	0.0011	0.0055	0.0087	0.000011	0.0005	0.9558	0.000100
	250	0.1848	0.5425	2.0202	0.0028	0.0620	245	0.0167	0.0007	0.0022	0.0081	0.000011	0.0002	0.9781	0.000067
	500	0.2608	0.8480	2.7097	0.0037	0.0884	374	0.0235	0.0005	0.0017	0.0054	0.000007	0.0002	0.7473	0.000047
	750	0.4147	1.3191	4.4498	0.0059	0.1418	589	0.0374	0.0006	0.0018	0.0059	0.000008	0.0002	0.7851	0.000050
	9999	1.1270	3.6752	13.3218	0.0131	0.3880	1,308	0.1017							
Crushing/Proc. Equipment Total		0.1733	0.6773	1.1752	0.0015	0.0748	132	0.0156							
Dumpers/Tenders	25	0.0097	0.0320	0.0601	0.0001	0.0029	7.6	0.0009	0.0004	0.0013	0.0024	0.000004	0.0001	0.3050	0.000035
Dumpers/Tenders Total		0.0097	0.0320	0.0601	0.0001	0.0029	7.6	0.0009							
Excavators	25	0.0198	0.0677	0.1253	0.0002	0.0047	16.4	0.0018	0.0008	0.0027	0.0050	0.000008	0.0002	0.6576	0.000072
	50	0.0816	0.2841	0.2458	0.0003	0.0212	25.0	0.0074	0.0016	0.0057	0.0049	0.000006	0.0004	0.5004	0.000147
	120	0.1086	0.5177	0.6791	0.0009	0.0586	73.6	0.0098	0.0009	0.0043	0.0057	0.000007	0.0005	0.6135	0.000082
	175	0.1208	0.6668	0.8932	0.0013	0.0512	112	0.0109	0.0007	0.0038	0.0051	0.000007	0.0003	0.6413	0.000062
	250	0.1242	0.3541	1.1360	0.0018	0.0372	159	0.0112	0.0005	0.0014	0.0045	0.000007	0.0001	0.6347	0.000045
	500	0.1735	0.5271	1.4763	0.0023	0.0516	234	0.0157	0.0003	0.0011	0.0030	0.000005	0.0001	0.4675	0.000031
	750	0.2895	0.8731	2.5290	0.0039	0.0871	387	0.0261	0.0004	0.0012	0.0034	0.000005	0.0001	0.5166	0.000035
Excavators Total		0.1220	0.5338	0.9071	0.0013	0.0481	120	0.0110							
Forklifts	50	0.0445	0.1623	0.1431	0.0002	0.0121	14.7	0.0040	0.0009	0.0032	0.0029	0.000004	0.0002	0.2934	0.000080
	120	0.0438	0.2176	0.2788	0.0004	0.0241	31.2	0.0040	0.0004	0.0018	0.0023	0.000003	0.0002	0.2602	0.000033
	175	0.0572	0.3307	0.4261	0.0006	0.0246	56.1	0.0052	0.0003	0.0019	0.0024	0.000004	0.0001	0.3203	0.000030
	250	0.0570	0.1614	0.5281	0.0009	0.0168	77.1	0.0051	0.0002	0.0006	0.0021	0.000003	0.0001	0.3085	0.000021
	500	0.0781	0.2208	0.6592	0.0011	0.0228	111	0.0070	0.0002	0.0004	0.0013	0.000002	0.0000	0.2220	0.000014
Forklifts Total		0.0541	0.2235	0.3950	0.0006	0.0204	54.4	0.0049							
Generator Sets	15	0.0149	0.0684	0.1016	0.0002	0.0058	10.2	0.0013	0.0010	0.0046	0.0068	0.000011	0.0004	0.6805	0.000090
	25	0.0266	0.0908	0.1594	0.0002	0.0091	17.6	0.0024	0.0011	0.0036	0.0064	0.000009	0.0004	0.7053	0.000096
	50	0.0872	0.2639	0.2847	0.0004	0.0234	30.6	0.0079	0.0017	0.0053	0.0057	0.000008	0.0005	0.6125	0.000157
	120	0.1106	0.4905	0.7587	0.0009	0.0590	77.9	0.0100	0.0009	0.0041	0.0063	0.000008	0.0005	0.6496	0.000083
	175	0.1347	0.7388	1.2314	0.0016	0.0592	142	0.0122	0.0008	0.0042	0.0070	0.000009	0.0003	0.8113	0.000069
	250	0.1277	0.4365	1.6763	0.0024	0.0464	213	0.0115	0.0005	0.0017	0.0067	0.000010	0.0002	0.8500	0.000046
	500	0.1818	0.7230	2.3955	0.0033	0.0690	337	0.0164	0.0004	0.0014	0.0048	0.000007	0.0001	0.6737	0.000033
	750	0.3035	1.1671	3.9863	0.0055	0.1134	544	0.0274	0.0004	0.0016	0.0053	0.000007	0.0002	0.7251	0.000037
Generator Sets Total		0.0767	0.3045	0.5430	0.0007	0.0324	61.0	0.0069							
Graders	50	0.1080	0.3263	0.2772	0.0004	0.0262	27.5	0.0097	0.0022	0.0065	0.0055	0.000007	0.0005	0.5508	0.000195
	120	0.1254	0.5310	0.7729	0.0009	0.0676	75.0	0.0113	0.0010	0.0044	0.0064	0.000007	0.0006	0.6247	0.000094
	175	0.1467	0.7345	1.1193	0.0014	0.0631	124	0.0132	0.0008	0.0042	0.0064	0.000008	0.0004	0.7081	0.000076
	250	0.1492	0.4331	1.4184	0.0019	0.0494	172	0.0135	0.0006	0.0017	0.0057	0.000008	0.0002	0.6885	0.000054
	500	0.1855	0.6289	1.6842	0.0023	0.0608	229	0.0167	0.0004	0.0013	0.0034	0.000005	0.0001	0.4590	0.000033
	750	0.3952	1.3289	3.6674	0.0049	0.1306	486	0.0357	0.0005	0.0018	0.0049	0.000007	0.0002	0.6477	0.000048
Graders Total		0.1446	0.6053	1.1663	0.0015	0.0593	133	0.0130							

Off-Highway Tractc	120	0.2113	0.7191	1.2368	0.0011	0.1078	93.7	0.0191	0.0018	0.0060	0.0103	0.000009	0.0009	0.7811	0.000159
	175	0.2045	0.8335	1.5337	0.0015	0.0871	130	0.0185	0.0012	0.0048	0.0088	0.000008	0.0005	0.7452	0.000105
	250	0.1641	0.4691	1.4453	0.0015	0.0601	130	0.0148	0.0007	0.0019	0.0058	0.000006	0.0002	0.5217	0.000059
	750	0.6538	2.8815	5.8130	0.0057	0.2353	568	0.0590	0.0009	0.0038	0.0078	0.000008	0.0003	0.7575	0.000079
	1000	0.9818	4.4978	10.0554	0.0082	0.3436	814	0.0886	0.0010	0.0045	0.0101	0.000008	0.0003	0.8143	0.000089
Off-Highway Tractors Total		0.2077	0.7649	1.7062	0.0017	0.0818	151	0.0187							
Off-Highway Trucks	175	0.1441	0.7580	1.0305	0.0014	0.0602	125	0.0130	0.0008	0.0043	0.0059	0.000008	0.0003	0.7148	0.000074
	250	0.1400	0.3837	1.2373	0.0019	0.0412	167	0.0126	0.0006	0.0015	0.0049	0.000007	0.0002	0.6662	0.000051
	500	0.2170	0.6362	1.7865	0.0027	0.0634	272	0.0196	0.0004	0.0013	0.0036	0.000005	0.0001	0.5447	0.000039
	750	0.3542	1.0311	2.9938	0.0044	0.1046	442	0.0320	0.0005	0.0014	0.0040	0.000006	0.0001	0.5890	0.000043
	1000	0.5484	1.6691	5.9808	0.0063	0.1796	625	0.0495	0.0005	0.0017	0.0060	0.000006	0.0002	0.6247	0.000049
Off-Highway Trucks Total		0.2141	0.6361	1.8543	0.0027	0.0644	260	0.0193							
Other Construction	15	0.0118	0.0617	0.0737	0.0002	0.0029	10.1	0.0011	0.0008	0.0041	0.0049	0.000010	0.0002	0.6738	0.000071
	25	0.0160	0.0544	0.1013	0.0002	0.0041	13.2	0.0014	0.0006	0.0022	0.0041	0.000007	0.0002	0.5287	0.000058
	50	0.0753	0.2653	0.2585	0.0004	0.0205	28.0	0.0068	0.0015	0.0053	0.0052	0.000007	0.0004	0.5598	0.000136
	120	0.1006	0.5277	0.7025	0.0009	0.0567	80.9	0.0091	0.0008	0.0044	0.0059	0.000008	0.0005	0.6738	0.000076
	175	0.0935	0.5873	0.8011	0.0012	0.0420	107	0.0084	0.0005	0.0034	0.0046	0.000007	0.0002	0.6087	0.000048
	500	0.1452	0.5234	1.5187	0.0025	0.0491	254	0.0131	0.0003	0.0010	0.0030	0.000005	0.0001	0.5085	0.000026
Other Construction Equipment To		0.0872	0.3765	0.7938	0.0013	0.0330	123	0.0079							
Other General Indu	15	0.0066	0.0391	0.0466	0.0001	0.0018	6.4	0.0006	0.0004	0.0026	0.0031	0.000007	0.0001	0.4264	0.000040
	25	0.0185	0.0632	0.1170	0.0002	0.0044	15.3	0.0017	0.0007	0.0025	0.0047	0.000008	0.0002	0.6140	0.000067
	50	0.0980	0.2738	0.2243	0.0003	0.0232	21.7	0.0088	0.0020	0.0055	0.0045	0.000006	0.0005	0.4349	0.000177
	120	0.1177	0.4487	0.6789	0.0007	0.0644	62.0	0.0106	0.0010	0.0037	0.0057	0.000006	0.0005	0.5170	0.000089
	175	0.1261	0.5728	0.9333	0.0011	0.0549	95.9	0.0114	0.0007	0.0033	0.0053	0.000006	0.0003	0.5482	0.000065
	250	0.1174	0.3177	1.2013	0.0015	0.0380	136	0.0106	0.0005	0.0013	0.0048	0.000006	0.0002	0.5423	0.000042
	500	0.2135	0.6384	2.0642	0.0026	0.0693	265	0.0193	0.0004	0.0013	0.0041	0.000005	0.0001	0.5308	0.000039
	750	0.3546	1.0522	3.5146	0.0044	0.1165	437	0.0320	0.0005	0.0014	0.0047	0.000006	0.0002	0.5833	0.000043
	1000	0.5246	1.6793	6.0067	0.0056	0.1805	560	0.0473	0.0005	0.0017	0.0060	0.000006	0.0002	0.5596	0.000047
Other General Industrial Equipme		0.1542	0.5159	1.3484	0.0016	0.0580	152	0.0139							
Other Material Han	50	0.1361	0.3789	0.3119	0.0004	0.0323	30.3	0.0123	0.0027	0.0076	0.0062	0.000008	0.0006	0.6067	0.000246
	120	0.1144	0.4370	0.6628	0.0007	0.0628	60.7	0.0103	0.0010	0.0036	0.0055	0.000006	0.0005	0.5056	0.000086
	175	0.1591	0.7257	1.1860	0.0014	0.0696	122	0.0144	0.0009	0.0041	0.0068	0.000008	0.0004	0.6976	0.000082
	250	0.1241	0.3385	1.2829	0.0016	0.0405	145	0.0112	0.0005	0.0014	0.0051	0.000007	0.0002	0.5801	0.000045
	500	0.1521	0.4596	1.4883	0.0019	0.0498	192	0.0137	0.0003	0.0009	0.0030	0.000004	0.0001	0.3833	0.000027
Other Material Handling Equipmer		0.1473	0.4951	1.3132	0.0015	0.0562	141	0.0133							
Pavers	25	0.0247	0.0799	0.1500	0.0002	0.0075	18.7	0.0022	0.0010	0.0032	0.0060	0.000009	0.0003	0.7464	0.000089
	50	0.1366	0.3592	0.2948	0.0004	0.0308	28.0	0.0123	0.0027	0.0072	0.0059	0.000007	0.0006	0.5598	0.000246
	120	0.1387	0.5057	0.8357	0.0008	0.0729	69.2	0.0125	0.0012	0.0042	0.0070	0.000007	0.0006	0.5766	0.000104
	175	0.1777	0.7784	1.3769	0.0014	0.0769	128	0.0160	0.0010	0.0044	0.0079	0.000008	0.0004	0.7331	0.000092
	250	0.2072	0.6081	1.9469	0.0022	0.0756	194	0.0187	0.0008	0.0024	0.0078	0.000009	0.0003	0.7775	0.000075
	500	0.2275	0.9254	2.1080	0.0023	0.0818	233	0.0205	0.0005	0.0019	0.0042	0.000005	0.0002	0.4665	0.000041
Pavers Total		0.1511	0.5357	0.8542	0.0009	0.0603	77.9	0.0136							
Paving Equipment	25	0.0153	0.0520	0.0968	0.0002	0.0039	12.6	0.0014	0.0006	0.0021	0.0039	0.000006	0.0002	0.5051	0.000055
	50	0.1166	0.3049	0.2514	0.0003	0.0263	23.9	0.0105	0.0023	0.0061	0.0050	0.000006	0.0005	0.4785	0.000210
	120	0.1087	0.3958	0.6561	0.0006	0.0574	54.5	0.0098	0.0009	0.0033	0.0055	0.000005	0.0005	0.4542	0.000082
	175	0.1387	0.6079	1.0816	0.0011	0.0602	101	0.0125	0.0008	0.0035	0.0062	0.000006	0.0003	0.5773	0.000072
	250	0.1277	0.3763	1.2206	0.0014	0.0467	122	0.0115	0.0005	0.0015	0.0049	0.000006	0.0002	0.4892	0.000046
Paving Equipment Total		0.1142	0.4316	0.7709	0.0008	0.0536	68.9	0.0103							
Plate Compactors	15	0.0050	0.0263	0.0314	0.0001	0.0012	4.3	0.0005	0.0003	0.0018	0.0021	0.000004	0.0001	0.2876	0.000030
Plate Compactors Total		0.0050	0.0263	0.0314	0.0001	0.0012	4.3	0.0005							

Pressure Washers	15	0.0071	0.0328	0.0487	0.0001	0.0028	4.9	0.0006	0.0005	0.0022	0.0032	0.000005	0.0002	0.3260	0.000043
	25	0.0108	0.0368	0.0646	0.0001	0.0037	7.1	0.0010	0.0004	0.0015	0.0026	0.000004	0.0001	0.2859	0.000039
	50	0.0315	0.1037	0.1284	0.0002	0.0094	14.3	0.0028	0.0006	0.0021	0.0026	0.000004	0.0002	0.2859	0.000057
	120	0.0302	0.1443	0.2235	0.0003	0.0157	24.1	0.0027	0.0003	0.0012	0.0019	0.000002	0.0001	0.2006	0.000023
Pressure Washers Total		0.0159	0.0619	0.0878	0.0001	0.0058	9.4	0.0014							
Pumps	15	0.0125	0.0497	0.0752	0.0001	0.0049	7.4	0.0011	0.0008	0.0033	0.0050	0.000008	0.0003	0.4949	0.000075
	25	0.0359	0.1004	0.1761	0.0002	0.0109	19.5	0.0032	0.0014	0.0040	0.0070	0.000010	0.0004	0.7795	0.000129
	50	0.1052	0.3116	0.3228	0.0004	0.0275	34.3	0.0095	0.0021	0.0062	0.0065	0.000009	0.0005	0.6867	0.000190
	120	0.1149	0.4984	0.7706	0.0009	0.0617	77.9	0.0104	0.0010	0.0042	0.0064	0.000008	0.0005	0.6496	0.000086
	175	0.1385	0.7405	1.2344	0.0016	0.0611	140	0.0125	0.0008	0.0042	0.0071	0.000009	0.0003	0.8007	0.000071
	250	0.1266	0.4210	1.6140	0.0023	0.0457	201	0.0114	0.0005	0.0017	0.0065	0.000009	0.0002	0.8055	0.000046
	500	0.1952	0.7595	2.4849	0.0034	0.0734	345	0.0176	0.0004	0.0015	0.0050	0.000007	0.0001	0.6904	0.000035
	750	0.3326	1.2556	4.2353	0.0057	0.1235	571	0.0300	0.0004	0.0017	0.0056	0.000008	0.0002	0.7609	0.000040
Pumps Total		0.0748	0.2926	0.4705	0.0006	0.0323	49.6	0.0067							
Rollers	15	0.0074	0.0386	0.0461	0.0001	0.0018	6.3	0.0007	0.0005	0.0026	0.0031	0.000007	0.0001	0.4213	0.000044
	25	0.0161	0.0549	0.1023	0.0002	0.0041	13.3	0.0015	0.0006	0.0022	0.0041	0.000007	0.0002	0.5337	0.000058
	50	0.1025	0.2911	0.2583	0.0003	0.0245	26.0	0.0092	0.0020	0.0058	0.0052	0.000007	0.0005	0.5197	0.000185
	120	0.0986	0.4063	0.6253	0.0007	0.0534	59.0	0.0089	0.0008	0.0034	0.0052	0.000006	0.0004	0.4916	0.000074
	175	0.1247	0.6199	1.0114	0.0012	0.0550	108	0.0113	0.0007	0.0035	0.0058	0.000007	0.0003	0.6180	0.000064
	250	0.1262	0.3887	1.3124	0.0017	0.0451	153	0.0114	0.0005	0.0016	0.0052	0.000007	0.0002	0.6124	0.000046
	500	0.1654	0.6313	1.6820	0.0022	0.0593	219	0.0149	0.0003	0.0013	0.0034	0.000004	0.0001	0.4382	0.000030
Rollers Total		0.0973	0.4060	0.6546	0.0008	0.0453	67.1	0.0088							
Rough Terrain Fork	50	0.1181	0.3778	0.3316	0.0004	0.0300	33.9	0.0107	0.0024	0.0076	0.0066	0.000009	0.0006	0.6772	0.000213
	120	0.0955	0.4327	0.5995	0.0007	0.0529	62.4	0.0086	0.0008	0.0036	0.0050	0.000006	0.0004	0.5204	0.000072
	175	0.1352	0.7256	1.0448	0.0014	0.0592	125	0.0122	0.0008	0.0041	0.0060	0.000008	0.0003	0.7137	0.000070
	250	0.1294	0.3798	1.2955	0.0019	0.0416	171	0.0117	0.0005	0.0015	0.0052	0.000008	0.0002	0.6832	0.000047
	500	0.1824	0.5717	1.7096	0.0025	0.0584	257	0.0165	0.0004	0.0011	0.0034	0.000005	0.0001	0.5131	0.000033
Rough Terrain Forklifts Total		0.1009	0.4642	0.6526	0.0008	0.0532	70.3	0.0091							
Rubber Tired Doze	175	0.2119	0.8457	1.5561	0.0015	0.0893	129	0.0191	0.0012	0.0048	0.0089	0.000008	0.0005	0.7399	0.000109
	250	0.2435	0.6833	2.0817	0.0021	0.0881	183	0.0220	0.0010	0.0027	0.0083	0.000008	0.0004	0.7339	0.000088
	500	0.3211	1.4228	2.7305	0.0026	0.1133	265	0.0290	0.0006	0.0028	0.0055	0.000005	0.0002	0.5297	0.000058
	750	0.4843	2.1329	4.1797	0.0040	0.1716	399	0.0437	0.0006	0.0028	0.0056	0.000005	0.0002	0.5317	0.000058
	1000	0.7496	3.4322	7.4509	0.0060	0.2591	592	0.0676	0.0007	0.0034	0.0075	0.000006	0.0003	0.5919	0.000068
Rubber Tired Dozers Total		0.2986	1.1749	2.5452	0.0025	0.1064	239	0.0269							
Rubber Tired Load	25	0.0204	0.0697	0.1292	0.0002	0.0050	16.9	0.0018	0.0008	0.0028	0.0052	0.000009	0.0002	0.6772	0.000074
	50	0.1200	0.3641	0.3118	0.0004	0.0292	31.1	0.0108	0.0024	0.0073	0.0062	0.000008	0.0006	0.6230	0.000216
	120	0.0971	0.4152	0.6015	0.0007	0.0525	58.9	0.0088	0.0008	0.0035	0.0050	0.000006	0.0004	0.4909	0.000073
	175	0.1238	0.6274	0.9501	0.0012	0.0535	106	0.0112	0.0007	0.0036	0.0054	0.000007	0.0003	0.6075	0.000064
	250	0.1259	0.3685	1.2125	0.0017	0.0417	149	0.0114	0.0005	0.0015	0.0048	0.000007	0.0002	0.5959	0.000045
	500	0.1867	0.6397	1.7158	0.0023	0.0613	237	0.0168	0.0004	0.0013	0.0034	0.000005	0.0001	0.4740	0.000034
	750	0.3850	1.3084	3.6184	0.0049	0.1276	486	0.0347	0.0005	0.0017	0.0048	0.000007	0.0002	0.6474	0.000046
	1000	0.5190	1.8389	5.9660	0.0060	0.1795	594	0.0468	0.0005	0.0018	0.0060	0.000006	0.0002	0.5939	0.000047
Rubber Tired Loaders Total		0.1195	0.4763	0.9346	0.0012	0.0508	109	0.0108							
Scrapers	120	0.1877	0.6943	1.1141	0.0011	0.0983	93.9	0.0169	0.0016	0.0058	0.0093	0.000009	0.0008	0.7825	0.000141
	175	0.2070	0.9107	1.5564	0.0017	0.0884	148	0.0187	0.0012	0.0052	0.0089	0.000010	0.0005	0.8461	0.000107
	250	0.2252	0.6408	2.0481	0.0024	0.0791	209	0.0203	0.0009	0.0026	0.0082	0.000009	0.0003	0.8379	0.000081
	500	0.3186	1.2113	2.8288	0.0032	0.1099	321	0.0287	0.0006	0.0024	0.0057	0.000006	0.0002	0.6429	0.000057
	750	0.5525	2.0861	4.9949	0.0056	0.1918	555	0.0499	0.0007	0.0028	0.0067	0.000007	0.0003	0.7404	0.000066
Scrapers Total		0.2783	1.0395	2.4118	0.0027	0.1005	262	0.0251							

Signal Boards	15	0.0072	0.0377	0.0450	0.0001	0.0018	6.2	0.0006	0.0005	0.0025	0.0030	0.000006	0.0001	0.4113	0.000043
	50	0.1151	0.3456	0.3415	0.0005	0.0296	36.2	0.0104	0.0023	0.0069	0.0068	0.000009	0.0006	0.7238	0.000208
	120	0.1176	0.5214	0.7807	0.0009	0.0644	80.2	0.0106	0.0010	0.0043	0.0065	0.000008	0.0005	0.6684	0.000088
	175	0.1535	0.8341	1.3333	0.0017	0.0685	155	0.0139	0.0009	0.0048	0.0076	0.000010	0.0004	0.8831	0.000079
	250	0.1632	0.5350	1.9963	0.0029	0.0580	255	0.0147	0.0007	0.0021	0.0080	0.000011	0.0002	1.0212	0.000059
Signal Boards Total		0.0192	0.0934	0.1399	0.0002	0.0077	16.7	0.0017							
Skid Steer Loaders	25	0.0202	0.0620	0.1166	0.0002	0.0063	13.8	0.0018	0.0008	0.0025	0.0047	0.000007	0.0003	0.5518	0.000073
	50	0.0517	0.2263	0.2279	0.0003	0.0157	25.5	0.0047	0.0010	0.0045	0.0046	0.000007	0.0003	0.5104	0.000093
	120	0.0429	0.2748	0.3267	0.0005	0.0245	42.8	0.0039	0.0004	0.0023	0.0027	0.000004	0.0002	0.3563	0.000032
Skid Steer Loaders Total		0.0468	0.2309	0.2522	0.0004	0.0179	30.3	0.0042							
Surfacing Equipme	50	0.0477	0.1403	0.1359	0.0002	0.0119	14.1	0.0043	0.0010	0.0028	0.0027	0.000004	0.0002	0.2822	0.000086
	120	0.0970	0.4215	0.6523	0.0007	0.0517	63.8	0.0088	0.0008	0.0035	0.0054	0.000006	0.0004	0.5314	0.000073
	175	0.0894	0.4730	0.7742	0.0010	0.0392	85.8	0.0081	0.0005	0.0027	0.0044	0.000006	0.0002	0.4901	0.000046
	250	0.1025	0.3374	1.1177	0.0015	0.0376	135	0.0092	0.0004	0.0013	0.0045	0.000006	0.0002	0.5395	0.000037
	500	0.1532	0.6418	1.6597	0.0022	0.0567	221	0.0138	0.0003	0.0013	0.0033	0.000004	0.0001	0.4424	0.000028
	750	0.2443	1.0046	2.6697	0.0035	0.0900	347	0.0220	0.0003	0.0013	0.0036	0.000005	0.0001	0.4627	0.000029
Surfacing Equipment Total		0.1277	0.5182	1.2760	0.0017	0.0468	166	0.0115							
Sweepers/Scrubbe	15	0.0124	0.0729	0.0870	0.0002	0.0034	11.9	0.0011	0.0008	0.0049	0.0058	0.000012	0.0002	0.7959	0.000074
	25	0.0237	0.0808	0.1496	0.0002	0.0058	19.6	0.0021	0.0009	0.0032	0.0060	0.000010	0.0002	0.7845	0.000085
	50	0.1048	0.3425	0.3055	0.0004	0.0271	31.6	0.0095	0.0021	0.0068	0.0061	0.000008	0.0005	0.6310	0.000189
	120	0.1107	0.5147	0.6989	0.0009	0.0622	75.0	0.0100	0.0009	0.0043	0.0058	0.000007	0.0005	0.6253	0.000083
	175	0.1439	0.7997	1.1204	0.0016	0.0637	139	0.0130	0.0008	0.0046	0.0064	0.000009	0.0004	0.7943	0.000074
	250	0.1146	0.3382	1.1784	0.0018	0.0362	162	0.0103	0.0005	0.0014	0.0047	0.000007	0.0001	0.6481	0.000041
Sweepers/Scrubbers Total		0.1148	0.5145	0.6862	0.0009	0.0510	78.5	0.0104							
Tractors/Loaders/B	25	0.0195	0.0657	0.1237	0.0002	0.0056	15.9	0.0018	0.0008	0.0026	0.0049	0.000008	0.0002	0.6345	0.000070
	50	0.0893	0.3199	0.2893	0.0004	0.0238	30.3	0.0081	0.0018	0.0064	0.0058	0.000008	0.0005	0.6069	0.000161
	120	0.0694	0.3529	0.4565	0.0006	0.0383	51.7	0.0063	0.0006	0.0029	0.0038	0.000005	0.0003	0.4311	0.000052
	175	0.0988	0.5861	0.7696	0.0011	0.0428	101	0.0089	0.0006	0.0033	0.0044	0.000007	0.0002	0.5794	0.000051
	250	0.1204	0.3666	1.1658	0.0019	0.0370	172	0.0109	0.0005	0.0015	0.0047	0.000008	0.0001	0.6869	0.000043
	500	0.2290	0.7443	2.0659	0.0039	0.0701	345	0.0207	0.0005	0.0015	0.0041	0.000008	0.0001	0.6897	0.000041
	750	0.3462	1.1159	3.2041	0.0058	0.1072	517	0.0312	0.0005	0.0015	0.0043	0.000008	0.0001	0.6897	0.000042
Tractors/Loaders/Backhoes Total		0.0792	0.3782	0.5392	0.0008	0.0387	66.8	0.0071							
Trenchers	15	0.0099	0.0517	0.0617	0.0001	0.0024	8.5	0.0009	0.0007	0.0034	0.0041	0.000009	0.0002	0.5643	0.000059
	25	0.0397	0.1355	0.2511	0.0004	0.0097	32.9	0.0036	0.0016	0.0054	0.0100	0.000017	0.0004	1.3167	0.000143
	50	0.1566	0.4082	0.3432	0.0004	0.0353	32.9	0.0141	0.0031	0.0082	0.0069	0.000009	0.0007	0.6584	0.000283
	120	0.1281	0.4684	0.7862	0.0008	0.0669	64.9	0.0116	0.0011	0.0039	0.0066	0.000006	0.0006	0.5408	0.000096
	175	0.1955	0.8632	1.5520	0.0016	0.0849	144	0.0176	0.0011	0.0049	0.0089	0.000009	0.0005	0.8223	0.000101
	250	0.2354	0.7089	2.2485	0.0025	0.0880	223	0.0212	0.0009	0.0028	0.0090	0.000010	0.0004	0.8916	0.000085
	500	0.2985	1.3011	2.8470	0.0031	0.1105	311	0.0269	0.0006	0.0026	0.0057	0.000006	0.0002	0.6226	0.000054
	750	0.5663	2.4440	5.4715	0.0059	0.2099	587	0.0511	0.0008	0.0033	0.0073	0.000008	0.0003	0.7825	0.000068
Trenchers Total		0.1427	0.4675	0.6684	0.0007	0.0549	58.7	0.0129							
Welders	15	0.0104	0.0416	0.0629	0.0001	0.0041	6.2	0.0009	0.0007	0.0028	0.0042	0.000006	0.0003	0.4138	0.000063
	25	0.0208	0.0581	0.1020	0.0001	0.0063	11.3	0.0019	0.0008	0.0023	0.0041	0.000006	0.0003	0.4514	0.000075
	50	0.0979	0.2753	0.2535	0.0003	0.0240	26.0	0.0088	0.0020	0.0055	0.0051	0.000007	0.0005	0.5192	0.000177
	120	0.0654	0.2659	0.4099	0.0005	0.0358	39.5	0.0059	0.0005	0.0022	0.0034	0.000004	0.0003	0.3292	0.000049
	175	0.1101	0.5455	0.9083	0.0011	0.0490	98.2	0.0099	0.0006	0.0031	0.0052	0.000006	0.0003	0.5611	0.000057
	250	0.0855	0.2618	1.0026	0.0013	0.0301	119	0.0077	0.0003	0.0010	0.0040	0.000005	0.0001	0.4763	0.000031
	500	0.1092	0.3838	1.2526	0.0016	0.0394	168	0.0098	0.0002	0.0008	0.0025	0.000003	0.0001	0.3352	0.000020
Welders Total		0.0646	0.2096	0.2564	0.0003	0.0225	25.6	0.0058							

All factors already account fot load and use rates per SCAQMD.

Average Emissions Factors, lb/hr:	0.1105	0.4296	0.8339	0.0010	0.0441	94.4934	0.0100
All Equip, HP Categories	(lb/hr)	(lb/hr)	(lb/hr)	(lb/hr)	(lb/hr)	(lb/hr)	(lb/hr)
	ROG	CO	NOX	SOX	PM	CO2	CH4

Table 4.1E-6

Construction Schedule

Preliminary

CLIENT: BrightSource Industries Israel
PROJECT: Palen Solar Electric Generating System
DOCUMENT: 459892-PSEGS-DOC-004

BY: CH2M HILL
REV: 0
DATE: 21 DEC 2012

Year	2013			2014												2015												2016					
Month	Oct	Nov	Dec	Jan	Feb	Mar	Apr	May	Jun	Jul	Aug	Sep	Oct	Nov	Dec	Jan	Feb	Mar	Apr	May	Jun	Jul	Aug	Sep	Oct	Nov	Dec	Jan	Feb	Mar	Apr	May	Jun
Activity / Month	1	2	3	4	5	6	7	8	9	10	11	12	13	14	15	16	17	18	19	20	21	22	23	24	25	26	27	28	29	30	31	32	33
PROJECT SITE & COMMON AREAS																																	
Biological Survey																																	
Site Fencing																																	
Site Roads																																	
Switchyard																																	
Grading																																	
Foundations																																	
Equipment Erection																																	
Commissioning																																	
Utilities																																	
Gas Pipeline																																	
230 kV Underground Lines																																	
Permanent Common Facilities																																	
Grading																																	
Evaporation Ponds																																	
Foundations																																	
Building Erection																																	
FIRST SOLAR FIELD																																	
Solar Field Roads																																	
Heliostat Installation																																	
SECOND SOLAR FIELD																																	
Solar Field Roads																																	
Heliostat Installation																																	
FIRST POWER BLOCK																																	
Grading																																	
Foundations and Underground Work																																	
Solar Tower																																	
Solar Receiver Steam Generator																																	
Steam Turbine																																	
Air Cooled Condenser																																	
Mechanical Erection																																	
Electrical Erection																																	
Checkout and Commissioning																																	
SECOND POWER BLOCK																																	
Grading																																	
Foundations and Underground Work																																	
Solar Tower																																	
Solar Receiver Steam Generator																																	
Steam Turbine																																	
Air Cooled Condenser																																	
Mechanical Erection																																	
Electrical Erection																																	
Checkout and Commissioning																																	

Table 4.1E-7 Construction Equipment Schedule

Document: 459892-PSEGS-DOC-005
Client: BrightSource Industries Israel
Project: Palen Solar Electric Generating Facility

Qty	Equipment	Fuel	HP	Usage Factor	Load Factor	Month: MM/YY Daily Operation	1 10/13	2 11/13	3 12/13	4 1/14	5 2/14	6 3/14	7 4/14	8 5/14	9 6/14	10 7/14	11 8/14	12 9/14	13 10/14
Solar Field Assembly and Installation (total for 2 plants)																			
2 ea	ISO Carrier	Diesel	290 hp	80%	57%	8 hrs/day						2	2	2	2	2	2	2	2
2 ea	10,000 lb Forklift	Diesel	90 hp	80%	30%	16 hrs/day						2	2	2	2	2	2	2	2
2 ea	300 cfm Air Compressor	Diesel	140 hp	80%	48%	16 hrs/day						2	2	2	2	2	2	2	2
2 ea	Yard Tractors	Diesel	250 hp	80%	60%	16 hrs/day					2	2	2	2	2	2	2	2	2
6 ea	Grader (CAT 160M AWD)	Diesel	215 hp	80%	61%	8 hrs/day				2	4	6	6	6	6	6	6	6	6
16 ea	Farm Tractors	Diesel	75 hp	80%	55%	8 hrs/day					4	8	16	16	16	16	16	16	16
2 ea	35 ton Rough Terrain Crane	Diesel	160 hp	80%	43%	8 hrs/day					2	2	2	2	2	2	2	2	2
4 ea	Pylon Insertion Rigs	Diesel	670 hp	80%	62%	8 hrs/day					2	4	4	4	4	4	4	4	4
Site Road Work																			
2 ea	Grader (CAT 160M AWD)	Diesel	215 hp	80%	61%	8 hrs/day				2	2	2	2	2	2				
4 ea	Elevating Scraper (CAT)	Diesel	330 hp	80%	72%	8 hrs/day				4	4	4	4	2	2				
1 ea	Compactor (CAT CP74)	Diesel	160 hp	80%	50%	8 hrs/day				1	1	1	1	1					
1 ea	Paver	Diesel	220 hp	80%	62%	6 hrs/day								1	1				
Concrete Batch Plant																			
1 ea	Front End Loader (CAT 980K)	Diesel	369 hp	80%	55%	8 hrs/day				1	1	1	1	1	1	1	1	1	1
20 ea	Concrete Transit Mix Trucks	Diesel	400 hp	N/A	On Road	8 hrs/day				6	10	10	16	20	20	20	20	20	20
Tower and Boiler Erection (total for 2 plants)																			
2 ea	Strand Jack System	Diesel	670 hp	80%	62%	5 hrs/day									1	1	1	2	2
2 ea	888 Manitowoc Crawler Crane	Diesel	330 hp	80%	43%	8 hrs/day				1	1	1	2	2	2	2	2	1	1
2 ea	120 ton Rough Terrain Picker	Diesel	300 hp	80%	43%	8 hrs/day				1	1	1	2	2	2	2	2	2	1
4 ea	50 ton Rough Terrain Picker	Diesel	190 hp	80%	43%	8 hrs/day				1	2	2	3	4	4	4	4	3	3
2 ea	10,000 lb Forklift	Diesel	90 hp	80%	30%	8 hrs/day				1	1	1	2	2	2	2	2	2	1
8 ea	400 amp Diesel Welders	Diesel	40 hp	80%	45%	8 hrs/day				2	4	4	6	8	8	8	8	4	2
8 ea	300 cfm Air Compressor	Diesel	140 hp	80%	48%	8 hrs/day				2	4	4	6	8	8	8	8	6	6
12 ea	125 ft Manlift	Diesel	75 hp	80%	46%	8 hrs/day				4	6	6	10	12	12	12	12	10	8
4 ea	Semi Tractor	Diesel	250 hp	N/A	On Road	8 hrs/day				2	2	2	4	4	4	4	4	4	2
ACC Erection (total for 2 plants)																			
2 ea	888 Manitowoc Crawler Crane	Diesel	330 hp	80%	43%	8 hrs/day												1	1
4 ea	50 ton Rough Terrain Picker	Diesel	190 hp	80%	43%	8 hrs/day												1	2
2 ea	50,000 lb Forklift	Diesel	230 hp	80%	30%	8 hrs/day											1	1	1
2 ea	10,000 lb Forklift	Diesel	90 hp	80%	30%	8 hrs/day											1	1	1
4 ea	40 ft Manlift	Diesel	50 hp	80%	46%	8 hrs/day												1	2
4 ea	60 ft Manlift	Diesel	50 hp	80%	46%	8 hrs/day												1	2
4 ea	85 ft Manlift	Diesel	75 hp	80%	46%	8 hrs/day													1
2 ea	400 amp Diesel Welders	Diesel	40 hp	80%	45%	8 hrs/day												1	1
2 ea	Semi Tractor	Diesel	250 hp	N/A	On Road	8 hrs/day											1	1	2
4 ea	300 cfm Air Compressor	Diesel	140 hp	80%	48%	8 hrs/day												2	2
Power Block Erection (total for 2 plants)																			
2 ea	888 Manitowoc Crawler Crane	Diesel	330 hp	80%	43%	8 hrs/day													
2 ea	65 ton Rough Terrain Crane	Diesel	250 hp	80%	43%	8 hrs/day								1	1	1	2	2	2
4 ea	35 ton Rough Terrain Crane	Diesel	160 hp	80%	43%	8 hrs/day				1	2	2	3	4	4	4	4	4	4
2 ea	Front End Loader (CAT 980K)	Diesel	369 hp	80%	55%	8 hrs/day				1	1	1	2	2	2	2	1	1	1
2 ea	Excavator, Hydraulic (CAT 318E)	Diesel	120 hp	40%	70%	8 hrs/day				1	1	1	2	2	2	2	1	1	1
2 ea	Compactor (CAT CP74)	Diesel	160 hp	80%	50%	8 hrs/day					1	1	1	2	2	2	1	1	1
4 ea	400 amp Diesel Welders	Diesel	40 hp	80%	45%	8 hrs/day					1	2	2	3	4	4	4	4	4
4 ea	300 cfm Air Compressor	Diesel	140 hp	80%	48%	8 hrs/day					1	2	2	3	4	4	4	4	4
4 ea	40 ft Manlift	Diesel	50 hp	80%	46%	8 hrs/day							1	1	2	3	4	4	4
8 ea	60 ft Manlift	Diesel	50 hp	80%	46%	8 hrs/day								2	2	4	6	8	8
4 ea	85 ft Manlift	Diesel	75 hp	80%	46%	8 hrs/day									1	2	2	3	4
4 ea	10,000 lb Forklift	Diesel	90 hp	80%	30%	8 hrs/day				1	1	2	3	3	4	4	4	4	4
4 ea	Semi Tractor	Diesel	250 hp	N/A	On Road	8 hrs/day				1	1	2	3	3	4	4	4	4	4
Common Area and Switchyard																			
1 ea	35 ton Rough Terrain Crane	Diesel	160 hp	80%	43%	8 hrs/day							1	1	1	1	1	1	1
1 ea	Excavator, Hydraulic (CAT 318E)	Diesel	120 hp	40%	70%	8 hrs/day				1	1	1	1	1	1				
1 ea	Trencher (Vermeer T555)	Diesel	185 hp	35%	60%	8 hrs/day					1	1	1	1	1				
1 ea	Elevating Scraper (CAT)	Diesel	330 hp	80%	72%	8 hrs/day				1	1								
1 ea	Bulldozer (CAT D6N)	Diesel	150 hp	40%	60%	8 hrs/day				1	1	1	1	1	1				
1 ea	Compactor (CAT CP74)	Diesel	160 hp	80%	50%	8 hrs/day					1	1	1	1	1				
1 ea	10,000 lb Forklift	Diesel	90 hp	80%	30%	8 hrs/day							1	1	1				
2 ea	60 ft Manlift	Diesel	50 hp	80%	46%	8 hrs/day							1	2	2	2	2	2	2
1 ea	400 amp Diesel Welders	Diesel	40 hp	80%	45%	8 hrs/day													
1 ea	300 cfm Air Compressor	Diesel	140 hp	80%	48%	8 hrs/day													
Miscellaneous																			
6 ea	Water Trucks (4,000 gallon)	Diesel	250 hp	60%	On Road	8 hrs/day				4	4	5	6	6	6	6	6	6	6
6 ea	Dump Truck, 12-16 YD	Diesel	325 hp	40%	On Road	8 hrs/day				2	3	3	5	6	6	6	6	6	5
8 ea	Pickup Trucks	Gasoline	250 hp	25%	On Road	8 hrs/day	2	4	4	8	8	8	8	8	8	8	8	8	8
12 ea	AWD Gators	Gasoline	25 hp	25%	50%	8 hrs/day	2	6	8	8	8	8	10	10	10	12	12	12	12
2 ea	Diesel Generator, 500 kW	Diesel	730 hp	45%	50%	8 hrs/day				1	1	1	1	1	1	2	2	2	2
8 ea	Diesel Generator, 1250 kW	Diesel	1,750 hp	45%	50%	8 hrs/day				1	2	2	3	4	4	5	6	6	7

By: CH2M HILL
Date: 18 DEC 2012
Revision: 0

14 11/14	15 12/14	16 1/15	17 2/15	18 3/15	19 4/15	20 5/15	21 6/15	22 7/15	23 8/15	24 9/15	25 10/15	26 11/15	27 12/15	28 1/16	29 2/16	30 3/16	31 4/16	32 5/16	33 6/16	TOTAL
2	2	2	2	2	2	2	2	2	2	2	2	2	2	2	2					48
2	2	2	2	2	2	2	2	2	2	2	2	2	2	2	2					48
2	2	2	2	2	2	2	2	2	2	2	2	2	2	2	2					48
2	2	2	2	2	2	2	2	2	2	2	2	2	2	2	2	2				52
6	6	6	6	4	2	2														86
16	16	16	16	16	16	16	16	16	16	16	16	16	16	16	16	8	4			392
2	2	2	2	2	2	2	2	2	2	2	2	2	2	2	2	1	1			52
4	4	4	4	4	4	4	4	4	4	4	4	4	4	4	2					96
																				12
																				20
																				5
																		1	1	4
1	1	1	1																	14
20	16	10	10																	218
2	1	1	1																	12
1																				16
1	1																			18
2	1																			33
1	1																			18
																				54
4	2																			66
6	4																			102
2	2																			36
1	2	2	2	2	2	1	1	1												16
3	4	4	4	4	4	4	4	4	3	2	1									44
2	2	2	2	2	2	1	1	1												18
2	2	2	2	2	2	2	1	1	1											20
2	3	4	4	4	4	4	4	4	2	1										39
2	3	4	4	4	4	4	4	4	2	1										39
2	4	4	4	4	4	4	4	4	4	2	1									42
2	2	2	2	2	2	2	2	1	1											20
2	2	2	2	2	2	2	2	2	2	1	1									26
4	4	4	4	4	4	4	4	2	2											40
						1	1	1	2	2	1	1	1							10
2	2	2	2	2	2	2	2	2	2	2	2	1	1	1						36
4	4	4	4	4	4	4	4	4	4	4	4	3	2	2	2	2	2			93
																				14
																				14
																				12
4	4	4	4	4	4	4	4	4	4	4	4	4	4	3	2	2	1			92
4	4	4	4	4	4	4	4	4	4	4	4	4	4	3	2	2	1			92
4	4	4	4	4	4	4	4	4	4	4	4	4	4	4	4	3	2			88
8	8	8	8	8	8	8	8	8	6	4	2									114
4	4	4	4	4	4	4	4	4	3	2										53
4	4	4	3	3	2	2	1	1	1											55
4	4	4	3	3	2	2	1	1	1											55
1					1	1	1													11
			1	1																8
																				5
			1	1	1															5
			1	1	1															9
				1	1															7
					1	1	1													6
1					2	2	2	2												22
					1	1	1	1												4
					1	1	1	1												4
6	6	6	6	6	6	6	6	6	6	6	6	6	6	6	4	4	2	2	2	159
3	3	3																		57
8	8	8	8	8	8	8	8	8	8	8	8	8	8	8	8	8	8	8	6	248
12	12	12	12	12	12	12	12	12	12	12	12	10	10	10	8	8	8	6	4	326
2	2																			18
8	8																			56

Table 4.1E-8 (2 pages)

Construction Personnel by Month[1]

CLIENT: BrightSource Industries Israel
PROJECT: Palen Solar Electric Generating System
DOCUMENT: 459892-PSEGS-DOC-006

BY: CH2M HILL
REV: 0
DATE: 4 DEC 2012

Month	1	2	3	4	5	6	7	8	9	10	11	12	13	14	15	16	17	18	19	20	21	22	23	24	25	26	27	28	29	30	31	32	33	TOTAL
	10/13	11/13	12/13	1/14	2/14	3/14	4/14	5/14	6/14	7/14	8/14	9/14	10/14	11/14	12/14	1/15	2/15	3/15	4/15	5/15	6/15	7/15	8/15	9/15	10/15	11/15	12/15	1/16	2/16	3/16	4/16	5/16	6/16	
PROJECT SITE																																		
Craft Day Shift																																		
Boilermaker	0	0	4	4	5	7	9	11	11	11	12	14	30	33	45	53	64	84	110	139	163	192	191	179	152	126	98	73	53	38	30	26	16	1,967
Carpenters	1	3	8	10	16	30	50	57	67	79	82	93	88	90	87	82	78	73	69	63	53	52	44	36	33	28	23	17	13	11	9	8	5	1,453
Cement Finisher	0	3	1	2	2	5	7	8	10	12	13	13	13	13	13	13	13	11	10	9	7	7	6	5	4	4	3	2	1	1	1	1	1	213
Electrician	1	4	5	8	10	20	34	38	37	34	36	38	45	60	70	76	85	106	136	173	209	255	250	240	220	191	159	119	93	76	60	51	31	2,939
Iron Worker	0	0	0	5	10	3	13	18	26	35	41	49	53	59	64	67	72	77	81	82	76	75	65	52	53	42	33	24	17	13	11	11	7	1,227
Laborer	4	6	13	15	23	37	58	67	74	80	93	95	90	91	83	80	80	81	81	77	65	59	49	41	42	36	30	21	18	15	13	13	8	1,630
Millwright	0	0	0	2	3	5	1	1	1	0	2	2	21	27	42	50	55	64	73	81	87	95	101	97	89	75	62	48	35	30	26	26	16	1,201
Equipment Operator	1	4	8	10	13	23	34	40	41	44	47	52	52	53	51	53	56	62	67	71	70	71	65	58	52	43	35	26	19	16	13	13	8	1,263
Pipefitter	0	0	11	13	17	33	41	46	51	57	63	69	80	89	104	119	141	179	226	272	314	368	361	339	294	247	200	146	110	88	67	59	36	4,204
Teamster	1	3	3	3	4	7	10	13	13	13	14	16	17	18	17	17	18	19	20	20	19	18	16	14	12	10	8	6	5	4	4	4	2	366
Craft-Day Shift Subtotal	**8**	**23**	**53**	**72**	**103**	**170**	**257**	**299**	**331**	**365**	**403**	**441**	**489**	**533**	**576**	**610**	**662**	**756**	**873**	**987**	**1063**	**1192**	**1148**	**1061**	**951**	**802**	**651**	**482**	**364**	**292**	**234**	**212**	**130**	**16,463**
Non-craft Day Shift[2]																																		
Subcontractors	15	31	39	52	77	93	93	100	100	108	110	116	116	116	116	116	154	162	177	193	231	280	270	231	193	162	154	116	100	93	77	39	23	4,030
Owner + Others (non-manual)	13	13	27	28	32	47	64	66	70	75	84	93	99	103	104	104	105	108	108	108	108	111	107	107	94	93	91	65	56	44	35	27	16	2,389
Startup (non-manual) Labor	0	0	0	0	0	0	0	2	2	3	3	4	5	4	4	4	4	4	4	5	6	6	6	6	6	6	5	5	5	5	3	3	2	110
Compliance Support	77	77	29	29	29	29	29	29	29	29	29	29	29	29	29	77	77	29	29	19	19	20	10	10	5	5	5	5	5	5	5	5	3	861
Transmission Line	0	0	0	0	0	0	0	0	0	0	0	0	0	0	0	0	0	0	0	0	0	37	36	0	0	0	0	0	0	0	0	0	0	73
Gas Line	0	0	0	0	0	0	0	0	0	0	0	0	0	0	0	0	0	0	0	0	0	30	0	0	0	0	0	0	0	0	0	0	0	30
Linear Compliance Support	0	0	0	0	0	0	0	0	0	0	0	0	0	0	0	0	0	0	0	0	0	6	3	0	0	0	0	0	0	0	0	0	0	9
Non-craft Day Shift Subtotal	**105**	**121**	**95**	**109**	**138**	**169**	**186**	**197**	**201**	**215**	**226**	**242**	**249**	**252**	**253**	**301**	**340**	**303**	**318**	**325**	**364**	**490**	**432**	**354**	**298**	**266**	**255**	**191**	**166**	**147**	**120**	**74**	**44**	**7,502**
TOTAL PROJECT SITE DAY SHIFT	**113**	**144**	**148**	**181**	**241**	**339**	**443**	**496**	**532**	**580**	**629**	**683**	**738**	**785**	**829**	**911**	**1,002**	**1,059**	**1,191**	**1,312**	**1,427**	**1,682**	**1,580**	**1,415**	**1,249**	**1,068**	**906**	**673**	**530**	**439**	**354**	**286**	**174**	**23,965**
Craft Swing Shift																																		
Boilermaker	0	0	0	0	2	2	2	3	3	3	3	4	9	11	14	17	22	30	40	51	61	72	72	67	66	54	42	31	22	16	13	12	7	744
Carpenters	1	1	4	5	7	9	13	16	20	24	26	32	33	33	32	31	31	30	29	27	23	23	20	17	14	12	10	7	6	5	4	4	2	549
Cement Finisher	0	1	1	1	1	1	2	2	3	3	3	4	4	4	4	5	4	4	4	4	3	2	2	2	2	1	1	1	1	1	1	1	1	73
Electrician	0	1	2	3	5	9	14	16	17	16	18	18	23	27	31	34	37	44	57	72	86	104	102	97	94	82	67	51	40	33	25	22	13	1,247
Iron Worker	0	0	0	0	5	19	22	25	27	33	35	35	38	40	42	44	46	48	51	51	49	51	46	40	23	18	14	10	7	6	5	4	2	834
Instrument Tech	0	0	0	0	0	12	12	12	12	12	12	12	12	12	12	12	12	12	12	12	12	12	12	12	0	0	0	0	0	0	0	0	0	228
Laborer	2	5	6	6	8	3	12	16	18	21	25	27	28	29	27	27	27	28	30	28	24	23	18	15	18	15	13	10	8	7	6	6	4	536
Millwright	0	0	0	0	1	9	10	10	10	10	10	11	16	18	24	26	28	32	36	40	42	46	48	46	38	32	27	21	15	13	12	12	7	643
Equipment Operator	0	2	3	4	6	6	11	13	14	15	17	19	19	21	21	21	23	26	29	31	30	31	28	26	22	18	15	11	9	7	6	5	3	509
Pipefitter	0	0	6	7	9	2	9	11	13	15	20	21	24	28	35	40	48	64	81	100	119	140	137	126	124	107	86	64	47	37	29	24	14	1,573
Teamster	0	0	1	1	2	2	3	4	4	4	6	6	6	6	6	6	6	7	7	8	7	7	6	5	5	4	3	2	2	2	1	1	1	130
Craft-Day Shift Subtotal	**3**	**10**	**23**	**27**	**46**	**74**	**110**	**128**	**141**	**156**	**175**	**189**	**212**	**229**	**248**	**263**	**284**	**325**	**376**	**424**	**456**	**511**	**491**	**453**	**406**	**343**	**278**	**208**	**157**	**127**	**102**	**91**	**54**	**7,066**
Non-craft Swing Shift[2]																																		
Subcontractors	4	8	10	13	19	23	23	25	25	27	29	29	29	29	29	29	39	40	44	48	58	70	67	58	48	40	39	29	25	23	19	10	6	1,008
Owner + Others (non-manual)	3	4	7	7	8	12	15	16	17	19	23	23	25	26	26	26	26	27	27	27	27	28	27	27	24	23	23	16	13	11	9	7	4	599
Startup (non-manual) Labor	0	0	0	0	0	0	0	0	1	1	1	1	1	1	1	1	1	1	1	1	2	2	2	2	2	1	1	1	1	1	1	1	1	29
Non-craft Swing Shift Subtotal	**7**	**12**	**17**	**20**	**27**	**35**	**38**	**41**	**43**	**47**	**53**	**53**	**55**	**56**	**56**	**56**	**66**	**68**	**72**	**76**	**87**	**100**	**96**	**87**	**74**	**64**	**63**	**46**	**39**	**35**	**29**	**18**	**11**	**1,636**
TOTAL PROJECT SITE SWING SHIFT	**10**	**22**	**40**	**47**	**73**	**109**	**148**	**169**	**184**	**203**	**228**	**242**	**267**	**285**	**304**	**319**	**350**	**393**	**448**	**500**	**543**	**611**	**587**	**540**	**480**	**407**	**341**	**254**	**196**	**162**	**131**	**109**	**65**	**8702**
SUBTOTAL ONSITE	**123**	**166**	**188**	**228**	**314**	**448**	**591**	**665**	**716**	**783**	**857**	**925**	**1,005**	**1,070**	**1,133**	**1,230**	**1,352**	**1,452**	**1,639**	**1,812**	**1,970**	**2,293**	**2,167**	**1,955**	**1,729**	**1,475**	**1,247**	**927**	**726**	**601**	**485**	**395**	**239**	**32,667**
OFFSITE LINEARS																																		
Transmission Line	0	3	3	3	14	35	39	28	10	10	6	5	0	0	0	0	0	0	0	0	0	0	0	0	0	0	0	0	0	0	0	0	0	156
Gas Line	0	0	0	0	0	0	0	0	0	0	0	0	0	0	0	0	2	2	12	12	12	12	12	8	0	0	0	0	0	0	0	0	0	72
Linear Compliance Support	0	0	0	0	0	0	0	0	0	0	0	0	0	0	0	0	0	0	6	6	6	6	7	4	4	4	0	2	0	0	0	0	0	45
TOTAL OFFSITE LINEARS	**0**	**0**	**0**	**0**	**0**	**0**	**0**	**0**	**0**	**0**	**0**	**0**	**0**	**0**	**0**	**0**	**5**	**5**	**29**	**40**	**61**	**18**	**19**	**12**	**4**	**4**	**0**	**2**	**0**	**0**	**0**	**0**	**0**	**273**
TOTAL WORKFORCE	**123**	**166**	**188**	**228**	**314**	**448**	**591**	**665**	**716**	**783**	**857**	**925**	**1,005**	**1,070**	**1,133**	**1,230**	**1,357**	**1,457**	**1,668**	**1,852**	**2,031**	**2,311**	**2,186**	**1,967**	**1,733**	**1,479**	**1,247**	**929**	**726**	**601**	**485**	**395**	**239**	**32,940**
Car Pool % (Day-shift Only)[3]	**7.5%**																																	
Worker (day shift)	100	131	121	153	209	292	379	428	460	502	542	586	634	678	721	803	893	947	1079	1199	1313	1492	1428	1302	1149	969	810	603	469	390	316	256	156	21,254
Worker Vehicles	93	121	112	142	193	270	351	396	426	464	501	542	586	627	667	743	826	876	998	1109	1215	1380	1321	1204	1063	896	749	558	434	361	292	237	144	19,660

Construction Personnel by Month[1]

CLIENT: BrightSource Industries Israel
PROJECT: Palen Solar Electric Generating System
DOCUMENT: 459892-PSEGS-DOC-006

BY: CH2M HILL
REV: 0
DATE: 4 DEC 2012

Month	1	2	3	4	5	6	7	8	9	10	11	12	13	14	15	16	17	18	19	20	21	22	23	24	25	26	27	28	29	30	31	32	33	TOTAL
	10/13	11/13	12/13	1/14	2/14	3/14	4/14	5/14	6/14	7/14	8/14	9/14	10/14	11/14	12/14	1/15	2/15	3/15	4/15	5/15	6/15	7/15	8/15	9/15	10/15	11/15	12/15	1/16	2/16	3/16	4/16	5/16	6/16	
Monthly Truck Traffic																																		TOTAL
Equipment & Materials	35	35	440	440	420	407	472	438	411	112	120	133	148	141	137	165	171	135	127	122	98	94	91	65	55	43	36	28	28	10	8	6	4	**5,136**
Concrete[4]	0	20	40	6	10	10	16	20	20	20	20	20	20	20	16	10	10	20	10	10	10	10	5	5	0	0	0	0	0	0	0	0	0	**348**
Heliostat Components	0	0	0	0	245	245	245	245	245	245	246	246	246	246	246	246	246	245	245	245	245	245	245	0	0	0	0	0	0	0	0	0	0	**4,662**
TOTAL TRUCK TRAFFIC	35	55	480	446	675	662	733	703	676	377	386	399	414	407	399	421	427	400	382	377	353	349	341	70	55	43	36	28	28	10	8	6	4	**10,146**
Average Daily Trucks (rounded)	**2**	**3**	**23**	**21**	**32**	**32**	**35**	**33**	**32**	**18**	**18**	**19**	**20**	**19**	**19**	**20**	**20**	**19**	**18**	**18**	**17**	**17**	**16**	**3**	**3**	**2**	**2**	**1**	**1**	**0**	**0**	**0**	**0**	**15**

Notes: [1] Based on revised Hidden Hills Project Data submitted to CEC on 1 October 2012
[2] Non-craft workers are the non-union superintendents and construction personnel on site.
[3] Car Pool includes Day-shift Craft Workers + Subcontractor Non-craft Workers + Compliance Support
[4] Concrete deliveries based on concrete deliveries from an onsite concrete batch plant from months 4 to 17.

Onsite Workforce	
Average Workforce =	**990**
Peak Workforce =	**2,293**
Total Workforce	
Average Workforce =	**998**
Peak Workforce =	**2,311**

Table 4.1E-9

Title : Riv2014
Version : Emfac2007 V2.3 Nov 1 2006
Run Date : 2012/10/01 13:10:07
Scen Year: 2014 -- All model years in the range 1970 to 2014 selected
Season : Annual
Area : Riverside County Average
I/M Stat : Enhanced Interim (2005) -- Using I/M schedule for area 61 Riverside (SC)
Emissions: Tons Per Day

	Light Duty Passenger Cars				Light Duty Trucks				Medium Duty Trucks				Heavy Duty Trucks: Gasoline Trucks			Heavy Duty Trucks: Diesel Trucks	Heavy Duty Trucks: Total HD Trucks	Urban Buses	Motor-cycles	All Vehicles
	Non-cat	Cat	Diesel	Total	Non-cat	Cat	Diesel	Total	Non-cat	Cat	Diesel	Total	Non-cat	Cat	Total					
Vehicles	2224.	761737.	1113.	765074.	2259.	498446.	6620.	507325.	823.	221058.	12087.	233968.	360.	23267.	23626.	38139.	61766.	365.	71974.	1640470.
VMT/1000	35.	30222.	27.	30284.	50.	21395.	226.	21671.	18.	9078.	497.	9593.	4.	445.	449.	4926.	5374.	47.	724.	67693.
Trips	8580.	4796510.	5916.	4811010.	8754.	3128060.	39688.	3176500.	5123.	2159080.	147692.	2311900.	6779.	156092.	162871.	405417.	568288.	1459.	143933.	11013100.
Reactive Organic Gas Emissions																				
Run Exh	0.24	0.98	0.00	1.23	0.37	1.13	0.02	1.51	0.16	0.65	0.06	0.87	0.02	0.18	0.20	3.19	3.39	0.07	2.35	9.41
Idle Exh	0.00	0.00	0.00	0.00	0.00	0.00	0.00	0.00	0.00	0.04	0.00	0.04	0.00	0.01	0.01	0.46	0.47	0.00	0.00	0.51
Start Ex	0.05	1.34	0.00	1.39	0.05	1.15	0.00	1.20	0.03	0.94	0.00	0.97	0.07	0.22	0.29	0.00	0.29	0.00	0.34	4.19
Total Ex	0.29	2.32	0.00	2.62	0.42	2.27	0.02	2.71	0.20	1.63	0.06	1.88	0.09	0.41	0.50	3.65	4.15	0.08	2.68	14.11
Diurnal	0.02	0.48	0.00	0.50	0.02	0.36	0.00	0.38	0.00	0.14	0.00	0.14	0.00	0.00	0.00	0.00	0.00	0.00	0.17	1.20
Hot Soak	0.03	0.72	0.00	0.75	0.03	0.52	0.00	0.55	0.01	0.22	0.00	0.23	0.00	0.00	0.01	0.00	0.01	0.00	0.05	1.59
Running	0.15	1.70	0.00	1.85	0.08	2.12	0.00	2.19	0.02	1.19	0.00	1.21	0.03	0.07	0.10	0.00	0.10	0.00	0.21	5.56
Resting	0.01	0.32	0.00	0.33	0.01	0.25	0.00	0.27	0.00	0.10	0.00	0.10	0.00	0.00	0.00	0.00	0.00	0.00	0.09	0.79
Total	0.50	5.54	0.00	6.05	0.56	5.53	0.02	6.10	0.22	3.27	0.06	3.56	0.13	0.49	0.62	3.65	4.27	0.08	3.20	23.25
Carbon Monoxide Emissions																				
Run Exh	2.86	48.42	0.02	51.30	4.13	52.16	0.14	56.43	2.56	22.72	0.38	25.66	0.64	4.43	5.06	14.00	19.06	0.72	24.53	177.70
Idle Exh	0.00	0.00	0.00	0.00	0.00	0.00	0.00	0.00	0.00	0.24	0.01	0.25	0.00	0.05	0.05	2.06	2.11	0.00	0.00	2.36
Start Ex	0.29	17.60	0.00	17.89	0.30	15.99	0.00	16.29	0.28	11.28	0.00	11.56	0.65	3.68	4.33	0.00	4.33	0.07	1.55	51.69
Total Ex	3.14	66.02	0.02	69.18	4.43	68.16	0.14	72.73	2.84	34.24	0.39	37.47	1.29	8.15	9.44	16.06	25.51	0.78	26.08	231.75
Oxides of Nitrogen Emissions																				
Run Exh	0.17	3.94	0.04	4.15	0.24	5.66	0.37	6.27	0.13	3.22	2.22	5.57	0.02	1.02	1.04	45.34	46.38	0.45	0.93	63.74
Idle Exh	0.00	0.00	0.00	0.00	0.00	0.00	0.00	0.00	0.00	0.00	0.03	0.04	0.00	0.00	0.00	5.32	5.32	0.00	0.00	5.35
Start Ex	0.01	1.24	0.00	1.25	0.01	1.42	0.00	1.43	0.01	2.29	0.00	2.30	0.01	0.48	0.49	0.00	0.49	0.01	0.05	5.53
Total Ex	0.18	5.18	0.04	5.40	0.25	7.07	0.37	7.70	0.14	5.51	2.25	7.90	0.03	1.51	1.53	50.66	52.19	0.46	0.98	74.63
Carbon Dioxide Emissions (000)																				
Run Exh	0.02	12.72	0.01	12.75	0.03	11.35	0.09	11.46	0.01	6.56	0.28	6.85	0.00	0.31	0.31	9.57	9.88	0.08	0.13	41.14
Idle Exh	0.00	0.00	0.00	0.00	0.00	0.00	0.00	0.00	0.00	0.01	0.00	0.01	0.00	0.00	0.00	0.30	0.30	0.00	0.00	0.31
Start Ex	0.00	0.38	0.00	0.38	0.00	0.31	0.00	0.31	0.00	0.21	0.00	0.21	0.00	0.01	0.01	0.00	0.01	0.00	0.01	0.92
Total Ex	0.02	13.10	0.01	13.13	0.03	11.66	0.09	11.77	0.01	6.77	0.28	7.07	0.00	0.32	0.32	9.87	10.19	0.08	0.13	42.37
PM10 Emissions																				
Run Exh	0.00	0.41	0.00	0.42	0.00	0.61	0.01	0.62	0.00	0.26	0.01	0.27	0.00	0.00	0.00	2.00	2.00	0.01	0.02	3.34
Idle Exh	0.00	0.00	0.00	0.00	0.00	0.00	0.00	0.00	0.00	0.00	0.00	0.00	0.00	0.00	0.00	0.05	0.05	0.00	0.00	0.05
Start Ex	0.00	0.04	0.00	0.04	0.00	0.05	0.00	0.05	0.00	0.02	0.00	0.02	0.00	0.00	0.00	0.00	0.00	0.00	0.00	0.12
Total Ex	0.00	0.45	0.00	0.46	0.00	0.66	0.01	0.68	0.00	0.28	0.02	0.30	0.00	0.00	0.00	2.05	2.05	0.01	0.02	3.51
TireWear	0.00	0.27	0.00	0.27	0.00	0.19	0.00	0.19	0.00	0.09	0.01	0.09	0.00	0.01	0.01	0.18	0.18	0.00	0.00	0.74
BrakeWr	0.00	0.42	0.00	0.42	0.00	0.30	0.00	0.30	0.00	0.13	0.01	0.13	0.00	0.01	0.01	0.14	0.15	0.00	0.01	1.00
Total	0.00	1.14	0.00	1.14	0.00	1.15	0.02	1.17	0.00	0.49	0.03	0.52	0.00	0.02	0.02	2.36	2.38	0.01	0.03	5.25
Lead	0.00	0.00	0.00	0.00	0.00	0.00	0.00	0.00	0.00	0.00	0.00	0.00	0.00	0.00	0.00	0.00	0.00	0.00	0.00	0.00
SOx	0.00	0.13	0.00	0.13	0.00	0.11	0.00	0.11	0.00	0.07	0.00	0.07	0.00	0.00	0.00	0.09	0.10	0.00	0.00	0.41
Fuel Consumption (000 gallons)																				
Gasoline	2.80	1352.31	0.00	1355.10	3.91	1205.08	0.00	1208.99	1.98	699.55	0.00	701.53	0.66	33.91	34.57	0.00	34.57	2.49	18.80	3321.48
Diesel	0.00	0.00	0.95	0.95	0.00	0.00	7.78	7.78	0.00	0.00	25.45	25.45	0.00	0.00	0.00	888.14	888.14	4.91	0.00	927.22

Table 4.1E-10

EMFAC Composite Emissions Factor Conversion

EMFAC 2007, V2.3, Nov 2006

County: Riverside
Year: 2014
Model Years: 1970-2014

EMFAC Burden Output

		LDP(gas)	LDP(diesel)	LDT(gas)	LDT(diesel)	MDT(gas)	MDT(diesel)	HDT(gas)	HDT(diesel)	Buses	Motorcycles
Daily VMT/1000		30257	27	21445	226	9066	497	449	4926	47	724
Daily VMT		30257000	27000	21445000	226000	9066000	497000	449000	4926000	47000	724000
ROG, tpd		6.04	0.01	6.08	0.02	3.5	0.06	0.62	3.65	0.08	3.2
CO, tpd		69.16	0.02	72.59	0.14	37.08	0.39	9.44	16.06	0.78	26.08
NOx, tpd		5.36	0.04	7.33	0.37	5.65	2.25	1.53	50.66	0.46	0.98
CO2, tpd	(x 1000) >	13120	10	11680	90	6790	280	320	9870	80	130
PM10, tpd		1.14	0.01	1.15	0.02	0.49	0.03	0.02	2.36	0.01	0.03
SOx, tpd		0.13	0.01	0.11	0.01	0.07	0.01	0.01	0.09	0.01	0.01

Composite EFs

	LDP(gas) g/VMT	LDP(diesel) g/VMT	LDT(gas) g/VMT	LDT(diesel) g/VMT	MDT(gas) g/VMT	MDT(diesel) g/VMT	HDT(gas) g/VMT	HDT(diesel) g/VMT	Buses g/VMT	Motorcycles g/VMT
ROG	0.1811	0.0003	0.2572	0.0008	0.3502	0.0018	1.2527	0.6722	1.5441	4.0096
CO	2.0736	0.0006	3.0707	0.0059	3.7104	0.0117	19.0730	2.9576	15.0553	32.6785
NOx	0.1607	0.0012	0.3101	0.0157	0.5654	0.0675	3.0913	9.3296	8.8788	1.2280
CO2	393.4	0.3	494.1	3.8	679.4	8.4	646.5	1817.7	1544.1	162.9
PM10	0.0342	0.0003	0.0486	0.0008	0.0490	0.0009	0.0404	0.4346	0.1930	0.0376
SOx	0.0039	0.0003	0.0047	0.0004	0.0070	0.0003	0.0202	0.0166	0.1930	0.0125

Composite EFs

	LDP(gas) lb/VMT	LDP(diesel) lb/VMT	LDT(gas) lb/VMT	LDT(diesel) lb/VMT	MDT(gas) lb/VMT	MDT(diesel) lb/VMT	HDT(gas) lb/VMT	HDT(diesel) lb/VMT	Buses lb/VMT	Motorcycles lb/VMT
ROG	0.000399	0.000001	0.000567	0.000002	0.000772	0.000004	0.002762	0.001482	0.003404	0.008840
CO	0.004572	0.000001	0.006770	0.000013	0.008180	0.000026	0.042049	0.006521	0.033191	0.072044
NOx	0.000354	0.000003	0.000684	0.000035	0.001246	0.000149	0.006815	0.020568	0.019574	0.002707
CO2	0.8672	0.0007	1.0893	0.0084	1.4979	0.0185	1.4254	4.0073	3.4043	0.3591
PM10	0.000075	0.000001	0.000107	0.000002	0.000108	0.000002	0.000089	0.000958	0.000426	0.000083
SOx	0.000009	0.000001	0.000010	0.000001	0.000015	0.000001	0.000045	0.000037	0.000426	0.000028

Weighted Avg LDP/LDT Gasoline EFs

	g/VMT	lb/VMT	Calc 1	0.415
ROG	0.213	0.00047	Calc 2	0.585
CO	2.487	0.00548		
NOx	0.223	0.00049		
CO2	435.1	0.95934		
PM10	0.040	0.00009		
SOx	0.004	0.00001		

	LDP(gas)	LDP(diesel)	LDT(gas)	LDT(diesel)	MDT(gas)	MDT(diesel)	HDT(gas)	HDT(diesel)	Buses	Motorcycles
Annual VMT	1.10E+10	9.86E+06	7.83E+09	8.25E+07	3.31E+09	1.81E+08	1.64E+08	1.80E+09	1.72E+07	2.64E+08
Daily Fuel Use, 10^3 gal	1355.1	0.95	1208.99	7.78	701.53	25.45	34.57	888.14	4.91	18.8
Daily Fuel Use, gals	1355100	950	1208990	7780	701530	25450	34570	888140	4910	18800
Annual Fuel Use, gals	494611500	346750	441281350	2839700	256058450	9289250	12618050	324171100	1792150	6862000
Average Miles/gallon	22.3	28.4	17.7	29.0	12.9	19.5	13.0	5.5	9.6	38.5

APPENDIX 4.1F

Evaluation of Best Available Control Technology

SCAQMD Rule 1303(a) requires the use of best available control technology (BACT) for new permit units that result in any net increase in emissions of any nonattainment pollutant, ozone depleting compound, or ammonia. As shown in Section 4.1, maximum daily emissions of all pollutants from each permit unit will be required to evaluate BACT. This section describes the emissions control technology that will be used to minimize emissions from each permitted unit, as well as control technology options that were considered and rejected, and the reason the options were rejected.

Auxiliary Boilers

As described in Section 4.1, the auxiliary boilers will be 249 MMBtu/hr natural gas-fired superheating boilers. These boilers will be used on a daily basis, up to about 1202 equivalent full-load hours per year.

The auxiliary boilers will be used on a daily basis and are expected to take less than an hour to come up to full capacity. Startup and low loads operations (~=12.5% load) are expected to be approximately 1.7 hours per day, with operations in the load range of 25-100%expected to be on the order of 3.5 hours per day (full load equivalent hours).

Superheating boilers are typically much larger and have a higher heat flux to produce superheated steam conditions compared to boilers producing saturated steam. Both factors contribute to higher uncontrolled NOx emission rates than those from saturated steam boilers. BACT databases published by the BAAQMD, SJVAPCD, and SCAQMD were reviewed to identify BACT guidelines and determinations relevant to moderately sized superheating boilers.

South Coast Air Quality Management District – The SCAQMD does not publish a single governing BACT guideline for major sources (comparable in size to the proposed boilers), but rather maintains a database of historical BACT determinations. The largest boilers for which the SCAQMD has published a BACT determination (February 2006) are two 2,088 MMBtu/hr utility boilers at the AES Huntington Beach facility located in Huntingdon Beach, California. The AES utility boilers are equipped with a LNB/FGR, selective catalytic reduction (SCR), and oxidation catalyst systems meeting CO and NOx emission limits of 5 ppmv @ 3% O_2 each. The next largest boiler for which the SCAQMD has published a BACT determination (October 1999) is a 110 MMBtu/hr boiler at the Darling International facility located in Los Angeles, California. The Darling International boiler is equipped with a LNB/FGR and SCR system meeting CO and NOx emission limits of 100 ppmv @ 3% O_2 and 9 ppmv @ 3% O_2, respectively. As with the SJVAPCD and BAAQMD, the SCAQMD has not made a separate NOx BACT determination for moderately sized superheating auxiliary boilers.

Bay Area Air Quality Management District – The BAAQMD has established a CO BACT guideline specifying good combustion practices in conjunction with a ULNB/flue gas recirculation (FGR) system, meeting a CO emission limit of 50 ppmv @ 3% O_2 for natural

gas-fired boilers rated at 50 MMBtu/hr or more. The BAAQMD has further established, for this boiler category, a NOx BACT guideline specifying a ULNB/FGR system, meeting a NOx emission limit of 9 ppmv @ 3% O_2. The boilers for which the BAAQMD established its NOx BACT determination are three 97 MMBtu/hr boilers at the Genentech facility located in South San Francisco, California. The Genentech boilers are equipped with ULNB/FGR systems meeting a NOx emission limit of 9 ppmv @ 3% O_2. The BACT range of values per the latest tabulation for this source category (Doc# 17.3.1, 8-4-10) is as follows:

- NOx 25-40 ppm @ 3% O2 (ULNB or LNB with FGR)
- CO 100 ppm @ 3% O2 (GCP and natural gas)

The BAAQMD has not established a separate NOx BACT guideline for moderately sized superheating auxiliary boilers.

San Joaquin Valley Air Pollution Control District – The SJVAPCD recently rescinded its BACT determinations for boilers. Previously, however, the SJVAPCD had established natural gas fuel with a liquefied petroleum gas backup as BACT for CO emissions for natural gas-fired boilers rated at 20 MMBtu/hr or more. The SJVAPCD had also established a NOx BACT guideline specifying an ultra low-NOx burner (ULNB) system, meeting a NOx emission limit of 9 ppmv @ 3% O_2, for natural gas-fired boilers rated at 20 MMBtu/hr or more and operated within the operational response range of the ULNB system. The largest boiler for which the SJVAPCD had published a NOx BACT determination is a 182 MMBtu/hr boiler at the Los Gatos Tomato facility located in Huron, California. The Los Gatos Tomato boiler is equipped with an ULNB system meeting a NOx emission limit of 9 ppmv @ 3% O_2. The SJVAPCD had not established a separate NOx BACT guideline for moderately sized superheating boilers.

San Diego Air Pollution Control District – Data derived from the San Diego APCD BACT database for boiler rated at greater than 50 but less than 250 mmbtu/hr indicates that BACT for NOx, for non-base loaded process units is typically 9 ppm @ 3% O2, utilizing LNBs and FGR, with natural gas fuel. No CO BACT limit is listed.

Other Control Technology Determinations – The Mojave Desert AQMD issued a Final Determination of Compliance (2009) for the Ivanpah Solar Electric Generating System, which includes large superheating steam boilers similar to those proposed for the Rio Mesa SEGF. Emissions from those boilers were below the MDAQMD's BACT thresholds and were therefore not subject to BACT. The emission limits for the Ivanpah boilers (249 MMBtu/hr heat input) were 9 ppmc NOx, 12.6 ppmc VOC and 25 ppmc CO. The proposed limits for the PSEG boilers are consistent with these limits, with the exception of a higher proposed CO limit for the auxiliary boilers. However, the proposed 50 ppmc CO limit for the auxiliary boilers is consistent with the BAAQMD CO BACT guideline.

Feasibility of SCR or SNCR for NOx Control – As discussed above, the auxiliary boilers will cycle on and off on a daily basis and will operate at full load equivalent for only about 3.5 hours per day. Selective catalytic reduction (SCR) or selective noncatalytic reduction (SNCR, or ammonia injection) technology is generally not effective during boiler startup because exhaust temperatures are too low for effective ammonia/NOx reactivity, even in the presence of a catalyst; therefore, SCR or SNCR control would potentially be effective in reducing NOx emissions from the boilers for only about 2/3 of the boiler

operating hours. It would be very expensive (and not cost-effective) to install and maintain SCR or ammonia injection systems on the boilers for such limited operations. In addition, the use of either of these control systems would result in the need to transport and store ammonia on-site. Because these economic and environmental impacts outweigh any potential air quality benefit, SCR and ammonia injection are not being proposed for use in the auxiliary boilers.

Conclusions – The SCAQMD BACT determination for the AES Huntington Beach utility boilers constitutes the most stringent determination for a natural gas fired boiler. However, these utility boilers have operated at a maximum annual capacity factor of 31% (based upon a review of seven years of operating data contained in USEPA's Acid Rain database) and could operate at an even higher capacity factor. As such, this BACT determination for utility boilers is not relevant to much smaller superheating auxiliary boilers that will operate at a maximum capacity factor of approximately 14% (based on full load equivalent hours).

The proposed boiler emission limits are consistent with recent BACT determinations and guidance and with permitted emission limits for similar boilers.

Nighttime Preservation Boilers

The nighttime preservation boilers are small 10 MMBtu/hr boilers that will be used to provide steam to the gland systems of the steam turbine and boiler feedwater pump overnight. BACT databases published by the BAAQMD, SJVAPCD, and SCAQMD were reviewed to identify BACT guidelines and determinations relevant to small boilers. Each of these units is expected to operate approximately 14 hours per day (which includes one startup hour), and 4872 hours per year.

SCAQMD – In 2000, the SCAQMD determined that 15 ppmc NOx and 50 ppmc CO were BACT for two 16.3 MMBtu/hr steam boilers—one at UCLA Med Center and one at Liberty Container. In 2002, a slightly larger boiler (39 MMBtu/hr) at LA County Internal Services Department was permitted with a NOx limit of 9 ppmc and a CO limit of 100 ppmc.

BAAQMD – The BAAQMD BACT guideline for small boilers (between 5 and 33.5 MMBtu/hr rated heat input) indicates that typical NOx control technology includes low NOx burners, flue gas recirculation, and in some cases, SCR. The BACT guideline indicates that good combustion practices and fuel selection are typical technology for VOC, CO, SOx and PM. A 50 ppm CO emission rate is shown as being achieved in practice and technologically feasible/cost effective. The controlled emission limits proposed for the nighttime preservation boilers are consistent with these technology listings.

SJVAPCD – SJVAPCD Rule 4320 is a prohibitory rule that limits NOx and CO emissions from small (between 5 and 20 MMBtu/hr rated heat input) boilers. NOx emissions are limited to 6 to 9 ppmc, depending upon the boiler permit date, and CO emissions must not exceed 400 ppmc.

SDAPCD – Data derived from the District listing for boilers rated at less than 50 mmbtu/hr indicates that BACT for NOx is 9 ppm @ 3% O2 using LNBs and FGR, with natural gas fuel. No CO BACT value is listed.

Conclusions – The proposed controlled emission limits of 9 ppmc NOx and 50 ppmc CO are consistent with the controlled emission levels required for boilers of this size range in other air districts. Because of the minimal NOx emissions expected from these small boilers (about 0.54 ton per year total for both units), the economic and environmental impacts of SCR outweigh any potential benefit of further NOx reductions.

Cooling System

The project will use wet surface air condensers (WSACs) for cooling and condensing process steam. The WSACS have minimal air pollutant emissions. An auxiliary partial dry cooling system or air-cooled condenser (ACC) at each power block will cool the generator, steam turbine generator lubrication oil, boiler feed pump lubricating oil, SRSG circulating water pumps and other equipment requiring cooling. The ACC is a closed-loop two-stage cooling system. In the first stage, heat is rejected using ambient air in a dry cooling system. This is followed by a closed-loop evaporative fluid cooler for additional cooling. The ACC reduces plant water consumption and therefore the potential for cooling water drift in two ways. First, the dry-cooling section will reduce the amount of heat that must be rejected in the closed-loop evaporative fluid cooler, which results in a corresponding reduction in the total amount of water evaporated during the cooling process. Second, the closed-loop evaporative fluid cooler allows the contaminants in the evaporative cooling water to be concentrated to a much greater extent than in a traditional open-loop cooling system because that water does not pass through the equipment being cooled.

Most of the auxiliary cooling will be provided by a fin-fan heat exchanger at each power block. The ACCs do not use water and therefore have no air pollutant emissions because no liquid droplets are entrained in the exhaust air. However, when the ambient temperature rises above 85° F, the fin-fan heat exchangers cannot achieve adequate heat rejection and must be supplemented with a small wet surface air cooler (WSAC) at each power block. The ACCs and the WSACs are exempt from permit requirements under District rules.

Potential particulate emissions from the cooling system are minimized through the use of dry cooling to the greatest extent possible. Wet cooling will be limited to high-temperature periods when the fin-fan cooler alone cannot provide sufficient cooling. Particulate emissions from the cooling system will be further minimized by using high efficiency drift eliminators (0.0005%) and treated water with relatively low TDS levels.

Emergency Engines

The project will include three emergency diesel generators for emergency power production and three diesel fire pump engines as required by fire codes to provide backup fire water pumping pressure in the event of a failure of the primary pump systems. Operation of diesel-powered emergency engines (generators and fire pumps) will be limited to less than 60 minutes per day, and less than or equal to 50 hours per year for testing and maintenance, with total allowable operations per Rule 1304(a)(4) not to exceed 199 hours per year per engine. BACT for emergency diesel engines, including fire pump engines, is generally the use of the latest EPA Tier certification level or the CARB ATCM limits applicable for the engine horsepower range, and the use of California certified low sulfur diesel fuel (<=15 ppm S). The emergency diesel engines at PSEGS will be certified to the latest EPA Tier certification levels and/or the CARB ATCM standards applicable at the

time the engines are purchased. In addition, the proposed engines will comply with all applicable NSPS for CI engines based on size and date of manufacture.

APPENDIX 4.1G

Offset Listing

The PSEGS project, pursuant to the SCAQMD NSR rules, may be required to purchase or acquire sufficient emission reduction credits to offset the proposed project emissions. The project is anticipated to be a non-major source. SCAQMD offset thresholds are implemented on a "facility" basis. For new facilities the offset thresholds are compared to the facility potential to emit (PTE). Section 4.1, Table 4.1-10 indicates the proposed facility PTE emissions are well below the Rule 1303 offset thresholds for all pollutants except NOx. Therefore, offsets pursuant to the SCAQMD NSR rule are only required for NOx. NSR rule required amounts of ERCs (mitigation) are delineated in Table 4.1G-1.

TABLE 4.1G-1 SCAQMD REGULATION XIII MITIGATION REQUIREMENTS

	Emission Reduction Credits (tons/yr)				
	PM_{10}	VOC	NO_x	SO_2	CO
SCAQMD Facility Offset Thresholds	4	4	4	4	29
PSEGS Facility PTE Values (SCAQMD)	1.92	2.88	4.55	1.02	10.56
SCAQMD Required Mitigations	0	0	4.55	0	0

* Values derived from Section 4.1 and Appendix 4.1A.1, Table 4.1A-13.

PSEGS will submit a detailed mitigation/offset plan to the CEC and the SCAQMD for review and implementation on a timetable compliant with the requirements of Rule 1303(b).

The NOx mitigation strategy is based on the facility participation in the NOx RECLAIM program, which would delete the necessity for acquiring NOx ERCs.

Although under the District's NSR rule, a number of sources onsite would not be required to provide offsets, under RECLAIM, all of the NOx emitting stationary sources would be required to have RECLAIM Trading Credits (RTCs). This results in a higher mitigation level than compared to the ERC program. It is estimated that during a normal operations year the facility would need to acquire and hold RTCs in the amount of 13,611 lbs. In the first year, in which commissioning will occur, the RTC amount must cover the commissioning emissions as well. The first year RTC amount will be approximately 13,751 lbs. These values are the best estimates at the time of filing and may change slightly during the CEC and SCAQMD review.

APPENDIX 4.1H

Cumulative Impacts Analysis Protocol

Potential cumulative air quality impacts are not expected to occur or result from the Palen Solar Energy Generating System Project (PSEGS) due to the following; (1) the low emissions from PSEGS, (2) the low predicted impacts, and (3) the lack of any major sources within an 6 mile radius of the site. A cumulative analysis is not warranted at this time. If such an analysis is deemed necessary, the cumulative impacts will be evaluated as follows.

Regional Impacts

Regional air quality impacts are possible for pollutants such as ozone, which involve photochemical processes that can take hours to occur. PSEGS is required, per the SCAQMD NSR Rule to supply emissions mitigation (see Appendix 4.1G), and in addition, mitigation for some other pollutants may be required by the CEC.

Although the relative importance of VOC and NO_x emissions in ozone formation differs from region to region, and from day to day, most air pollution control plans in California require roughly equivalent controls (on a ton per year basis) for these two pollutants. The change in emissions of the sum of these pollutants, equally weighted, will be used to provide a reasonable estimate of the impact of PSEGS on ozone levels. The net change in emissions of ozone precursors from PSEGS will be compared with emissions from all sources within the SCAQMD (Table 4.1H-1).

Table 4.1H-1 Estimated SCAQMD Emissions Inventory for 2010 (tons/day)

Source Category	**TOG**	**ROG**	**CO**	**NOx**	**SOx**	**PM10**	**PM2.5**
Total Stationary Sources	210.9	111.3	47.2	56.5	18.2	24.9	15.6
Total Area Sources	235.2	149.3	113.7	23.6	0.9	241.0	56.1
Total Mobile Sources	368.6	335.7	2878.2	755.8	39.5	48.2	38.6
Total Natural Sources	110.5	94.7	178.8	5.4	1.7	18.1	15.3
AQMD Total (tons/day)	925.1	690.9	3217.8	841.3	60.2	332.1	125.7
AQMD Total (tons/yr)	337662	252179	1174497	307075	21973	121217	45881

Source: CARB, 11/2012.

Air quality impacts of fine particulate, PM_{10} and/or $PM_{2.5}$, have the potential to be either regional or localized in nature. On a regional basis, an analysis similar to that proposed above for ozone will be performed, looking at the three pollutants that can form PM_{10} in the atmosphere, i.e., VOC, SO_x, and NO_x, as well as directly emitted particulate matter. SCAQMD regulations require offsets to be provided for PM_{10}, NOx, SOx, and VOC emissions at a threshold of 4 tons per year, and CO offsets at a threshold level of 29 tons per year.

As in the case of ozone precursors, emissions of $PM_{10/2.5}$ precursors are expected to have approximately equivalent ambient impacts in forming $PM_{10/2.5}$, per ton of emissions on a regional basis. Table 4.1H-2 provides the comparison of emissions of the criteria pollutants from PSEGS with emissions from all sources within SCAQMD as a whole.

Table 4.1H-2 Comparison of PSEGS Emissions to Estimated Inventory for 2010

Category	TOG	ROG[1]	CO	NOx	SOx	PM10	PM2.5
PSEGS Emissions (tons/yr)	-	2.88	10.56	4.55	1.02	1.92	1.92
SCAQMD Total (tons/yr)	337662	252179	1174497	307075	21973	121217	45881
PSEGS % of AQMD Total (basis Tons/yr)	**-**	**0.00114**	**0.0009**	**0.0015**	**0.0046**	**0.0016**	**0.0042**

[1] PSEG VOC emissions compared to inventory ROG emissions.

Localized Impacts

Localized impacts from PSEGS could result from emissions of carbon monoxide, oxides of nitrogen, sulfur oxides, and directly emitted PM_{10}. A dispersion modeling analysis of potential cumulative air quality impacts will be performed for all four of these pollutants.

In evaluating the potential cumulative localized impacts of PSEGS in conjunction with the impacts of existing facilities and facilities not yet in operation but that are reasonably foreseeable, a potential impact area in which cumulative localized impacts could occur was identified as an area with a radius of 8 miles around the plant site. Based on the results of the proposed air quality modeling analyses described above, "significant" air quality impacts, as that term is defined in federal air quality modeling guidelines, will be determined. If the project's impacts do not exceed the significance levels, no cumulative impacts will be expected to occur, and no further analysis will be required. Otherwise, in order to ensure that other projects that might have significant cumulative impacts in conjunction with PSEGS are identified, a search area with a radius of 6 miles beyond the project's impact area will be used for the cumulative impacts analysis. Within this search area, three categories of projects with emissions sources will be used as criteria for identification:

- Projects that have been in operation for a sufficient time period, and whose emissions are included in the overall background air quality assessment.
- Projects which recently began operations whose emissions may not be reflected in the ambient monitoring background data.
- Projects for which air pollution permits to construct have not been issued, but that are reasonably foreseeable.

The applicable inclusion dates for each of the above source categories will be discussed and approved by the SCAQMD staff. The requested source listings will incorporate these dates. Projects that are existing, and that have been in operation such that their emissions are reflected in the ambient air quality data that has been used to represent background concentrations require no further analysis. The cumulative impacts analysis adds the

modeled impacts of selected facilities to the maximum measured background air quality levels, thus ensuring that these existing projects are taken into account.

Projects for which air pollution permits to construct have been issued but that were not operational will be identified through a request of permit records from the SCAQMD. The search will be requested to be performed at two levels. For permits that are considered "major modifications" (i.e., emissions increases greater than 40 tons/year of NO_x or SO_2, 25 tons/year of total suspended particulate, 15 tons/year of PM_{10}), a region within 6 miles of the proposed project site will be evaluated. For projects that had smaller emissions changes, but still greater than 15 tons/year, a region within 6 miles of the proposed project site will also evaluated. Projects that satisfy either of these criteria and that had a permit to construct issued after the applicable inclusion date, will be included in the cumulative air quality impacts analysis. The inclusion date, as noted above, will be selected based on the typical length of time a permit to construct is valid and typical project construction times, to ensure that projects that are not reflected in the current ambient air quality data are included in the analysis. Projects for which the emissions change was smaller than 15 tons/year will be assumed to be *de minimus*, and will not be included in the dispersion modeling analysis.

A list of projects within the project region meeting the above noted criteria will be requested from the SCAQMD staff if it is determined that a cumulative analysis is warranted.

Given the potentially wide geographic area over which the dispersion modeling analysis is to be performed, the Aermod model will be used to evaluate cumulative localized air quality impacts. The detailed modeling procedures, Aermod options, and meteorological data used in the cumulative impacts dispersion analysis were the same as those described in Section 4.1. The receptor grid will be spaced at 100 meters and cover the area in which the detailed modeling analysis (described above) indicates that the project will have impacts that may exceed any significance levels.

Cumulative Impacts Dispersion Modeling

The dispersion modeling analysis of cumulative localized air quality impacts for the proposed project will be evaluated in combination with other reasonably foreseeable projects and air quality levels attributable to existing emission sources, and the impacts were compared to state or federal air quality standards for significant impact. As discussed above, the highest second-highest modeled concentrations will be used to demonstrate compliance with standards based on short-term averaging periods (24 hours or less).

Supporting information to be used in the analysis includes the following:

- 2010 estimated emissions inventory for SCAQMD (Table 4.1H-1);
- List of projects resulting from the screening analysis of permit files by the SCAQMD;
- Table delineating location data of sources included in the cumulative air quality impacts dispersion modeling analysis;
- Stack parameters for sources included in the cumulative air quality impacts dispersion modeling analysis; and
- Output files for the dispersion modeling analysis.

APPENDIX 4.1I

Air District Permitting Application Forms

The SCAQMD permitting application forms will be included in the stand-alone application document prepared for the AQMD per Regulation XIII. These application forms in conjunction with the amended sections from Volumes I and II of the AFC (specifically the Project Description Section, the Air Quality and Public Health Section and applicable Appendices) constitute the facility's application for a Permit to Construct pursuant to SCAQMD Rule 1301(b)(2).

Forms to be included in the SCAQMD application:

- Standard District permit application and source specific forms.
- CEQA forms
- Title V forms

BEFORE THE ENERGY RESOURCES CONSERVATION AND DEVELOPMENT COMMISSION OF THE STATE OF CALIFORNIA
1516 NINTH STREET, SACRAMENTO, CA 95814
1-800-822-6228 – WWW.ENERGY.CA.GOV

AMENDMENT
FOR THE PALEN SOLAR ELECTRIC GENERATING SYSTEM

Docket No. 09-AFC-7C
PROOF OF SERVICE
(Revised 3/1/13)

SERVICE LIST:

APPLICANT
Palen Solar Holdings, LLC
Clay Jensen
410 South Rampart Blvd.,Suite 390
Las Vegas, NV 89145
cjensen@brightsourceenergy.com

Palen Solar Holdings, LLC
Charlie Turlinski
1999 Harrison Street, Suite 2150
Oakland, CA 94612
cturlinski@brightsourceenergy.com

APPLICANT'S CONSULTANT
Centerline
Andrea Grenier
1420 E. Roseville Parkway
Suite 140-377
Roseville, CA 95661
andrea@agrenier.com

APPLICANT'S COUNSEL
Scott Galati, Esq.
Marie Fleming
Galati/Blek, LLP
455 Capitol Mall, Suite 350
Sacramento, CA 95814
sgalati@gb-llp.com
mfleming@gb-llp.com

INTERESTED AGENCY
California ISO
e-recipient@caiso.com

County of Riverside
Office of Riverside County Counsel
Tiffany North
3960 Orange Street, Suite 500
Riverside, CA 92501
tnorth@co.riverside.ca.us

INTERVENORS
Center for Biological Diversity
Lisa T. Belenky, Senior Attorney
351 California St., Suite 600
San Francisco, CA 94104
lbelenky@biologicaldiversity.org

Center for Biological Diversity
Ileene Anderson
Public Lands Desert Director
PMB 447, 8033 Sunset Boulevard
Los Angeles, CA 90046
ianderson@biologicaldiversity.org

Basin and Range Watch
Kevin Emmerich
Laura Cunningham
P.O. Box 153
Baker, CA 92309
atomictoadranch@netzero.net
bluerockiguana@hughes.net

Californians for Renewable Energy
Alfredo Acosta Figueroa
424 North Carlton Avenue
Blythe, CA 92225
lacunadeaztlan@aol.com

INTERVENORS (Cont'd.)
California Unions for Reliable Energy
Tanya A. Gulesserian
Elizabeth Klebaner
Adams Broadwell Joseph & Cardoza
601 Gateway Boulevard, Suite 1000
South San Francisco, CA 94080
tgulesserian@adamsbroadwell.com
eklebaner@adamsbroadwell.com

ENERGY COMMISSION STAFF
Christine Stora
Project Manager
christine.stora@energy.ca.gov

Jennifer Martin-Gallardo
Staff Counsel
jennifer.martin-gallardo@energy.ca.gov

ENERGY COMMISSION – PUBLIC ADVISER
Blake Roberts
Assistant Public Adviser
publicadviser@energy.ca.gov

COMMISSION DOCKET UNIT
California Energy Commission
Docket Unit
Attn: Docket No. 09-AFC-07C
1516 Ninth Street, MS-4
Sacramento, CA 95814-5512
docket@energy.ca.gov

*Indicates change

OTHER ENERGY COMMISSION PARTICIPANTS (LISTED FOR CONVENIENCE ONLY):
After docketing, the Docket Unit will provide a copy to the persons listed below. Do not send copies of documents to these persons unless specifically directed to do so.

KAREN DOUGLAS
Commissioner and Presiding Member

*David Hochschild
Commissioner and Associate Member

Raoul Renaud
Hearing Adviser

Galen Lemei
Adviser to Presiding Member

Jennifer Nelson
Adviser to Presiding Member

*Jim Bartridge
Adviser to Associate Member

Eileen Allen
Commissioners' Technical
Adviser for Facility Siting

DECLARATION OF SERVICE

I, Marie Fleming, declare that on March 13, 2013, I served and filed copies of the attached **SUPPLEMENT NO. 2 COMPLETE AIR QUALITY & PUBLIC HEALTH SECTIONS FOR PALEN SOLAR HOLDINGS, LLC'S PETITION FOR AMENDMENT**, dated, March 13, 2013. This document is accompanied by the most recent Proof of Service, which I copied from the web page for this project at: http://www.energy.ca.gov/sitingcases/palen/compliance/.

The document has been sent to the other parties in this proceeding (as shown on the Proof of Service) and to the Commission's Docket Unit, as appropriate, in the following manner:

(C*heck one*)

For service to all other parties and filing with the Docket Unit at the Energy Commission:

___ I e-mailed the document to all e-mail addresses on the Service List above and personally delivered it or deposited it in the US mail with first class postage to those parties noted above as "hard copy required"; **OR**

_X_ Instead of e-mailing the document, I personally delivered it or deposited it in the US mail with first class postage to all of the persons on the Service List for whom a mailing address is given.

I declare under penalty of perjury under the laws of the State of California that the foregoing is true and correct, and that I am over the age of 18 years.

Dated: 03/13/2013