DOCKET
11-IEP-1E
DATE RECD. MAR 18 2011

PG&E's 2010 Electric Transmission Grid Expansion Plan

Pacific Gas and Electric Company®

March 29, 2010

Executive Summary

The need for longer-term, integrated, transmission planning activities has become increasingly important over the last several years. There are various planning initiatives targeted at improving transmission system reliability, interconnecting renewable resources, and developing long-term transmission plans to serve future demand needs. The need to integrate these transmission planning activities is particularly important because the lack of integration may lead to higher risks of service interruptions for electric customers, or the inability to deliver on the interconnection of generation resources that are needed to serve the grid.

A priority for Pacific Gas and Electric Company (PG&E) is to develop a plan that not only focuses on the replacement and expansion of its electric facilities, but also ensures that the electrical transmission system is compliant with all applicable standards and is able to accept delivery of new renewable resources in order to meet California's current and future renewable energy targets.

PG&E's 2010 Electric Transmission Grid Expansion Plan (Transmission Plan) summarizes PG&E's plan for transmission upgrades. Specifically, this Transmission Plan is a ten year plan, which is expected to cost between $13 billion and $19 billion. This Transmission Plan aims at accomplishing the following, but not limited to:

- NERC compliance
- Improving transmission system access for renewable generation to meet Renewable Portfolio Standard (RPS) goals and targets
- Improving service reliability for end users
- Coordinating long term plans for PG&E's transmission system

About PG&E

Pacific Gas and Electric Company (PG&E), incorporated in California in 1905, is one of the largest combination natural gas and electric utilities in the United States. Based in San Francisco, PG&E is a wholly owned subsidiary of PG&E Corporation.

PG&E serves approximately 15 million people throughout a 70,000 square mile service area in northern and central California. Within this service territory, PG&E provides electric service through 123,054 circuit miles of electric distribution lines and 18,610 circuit miles of interconnected transmission lines. These interconnected electric facilities form an electric grid that interconnects power generation facilities and delivers electric power to end users. In addition, PG&E has approximately 40,123 miles of natural gas distribution pipelines and 6,136 miles of transportation pipelines for natural gas service.

PG&E's electric service area stretches from Eureka in the north to Bakersfield in the south, and from the Pacific Ocean in the west to the Sierra Nevada in the east. Within

this area, some of the larger metropolitan areas that receive electric service from PG&E include Bakersfield, Stockton, Fresno, Oakland, San Francisco, San Jose, Santa Rosa, and the Silicon Valley.

NERC Compliance

The North American Electric Reliability Corporation (NERC) reliability standards set forth the criteria for meeting system performance requirements.

The NERC reliability standards that were considered in the reliability assessment completed as part of this Transmission Plan are the following:

- TPL-001: System Performance Under Normal Conditions;
- TPL-002: System Performance Following Loss of a Single Bulk Electric System (BES) Element;
- TPL-003: System Performance Following Loss of Two or More BES Elements;
- TPL-004: System Performance Following Extreme BES Events.

As the registered Transmission Planner for PG&E's transmission system, PG&E is required to annually develop and submit for approval to the California Independent System Operator Corporation (CAISO), a transmission plan that addresses the near term (years one through five) and longer term (years 6 through ten) planning horizons. Development of this transmission plan is coordinated in accordance with the CAISO's Tariff, Section 24, as well as the business rules set forth in the CAISO Business Practice Manual for CAISO Transmission Planning Process (TPP). The CAISO's Transmission Planning Process is an annual integrated, open, participatory and transparent process that focuses on ensuring reliable, economically efficient, and nondiscriminatory use of the transmission system. Specifically, the CAISO's Transmission Planning Process entails three phases: a) development of Unified Planning Assumptions and CAISO Study Plan, b) Assessment of system reliability, and c) project approval and development of the CAISO Transmission Plan.

In 2009, as part of the CAISO's TPP, PG&E performed a valid reliability assessment with all transmission facilities in service and with normal pre-contingency operating procedures in effect, as well as an assessment under Category B and C contingency conditions. This reliability assessment covered critical system conditions, study assumptions, and study years agreed upon by the CAISO and participating stakeholders. PG&E follows the CAISO Grid Planning Standards which encompasses both the NERC Planning Standards (FAC 001, FAC 002, and TPL 001 – TPL 004) and the Western Electricity Coordinating Council (WECC) Reliability Standards to ensure the transmission system performance maintains acceptable performance.

The annual reliability assessment covers the near term (years one through five) and longer term (tenth year) planning horizons and it evaluates the performance of the entire PG&E transmission system, which consists of facilities with nominal voltages of 500 kilovolts (kV), 230 kV, 115 kV, 70 kV and 60 kV.

For meeting requirements of TPL-002-0, PG&E assesses all Category B contingencies within the PG&E system. For meeting requirements of TPL-003-0, PG&E runs power flow and stability studies for Category C contingencies. PG&E selects events that are considered most severe because these could have the most adverse effect to the bulk transmission system operation as well as the ability to serve load reliably. For Category C, PG&E analyzes all 500 kV single-line outages, the largest 500/230 kV transformer bank outages, all double line outages for lines within the same right-of-way, and multiple double generating unit outages that could have a great impact on the bulk transmission system. In addition, PG&E analyzes a number of Category C contingencies (C1 – C9 type) in each of the PG&E's local areas that could have an impact on the sub-transmission system operation and the ability to serve local area load. The contingencies considered for the sub-transmission studies are those that have a high probability of occurrence such as double circuit tower line (C5) outages as well as others selected using a method that mainly involves engineering judgment, analyzing the results of single element contingencies, and local area knowledge.

In addition to studies performed by PG&E, PG&E also relies on power flow and stability studies performed by other organizations, such as the WECC and CAISO in its annual planning assessment and generation interconnection studies.

PG&E's reliability assessment is documented in PG&E's 2009 Electric Transmission Reliability Assessment Report under Appendix 6. The report documents the results of the reliability assessment studies as well as it identifies short and long-term needs at locations where potential transmission expansion is required. These results form the foundation for the transmission projects that are proposed in this transmission plan.

For ease of coordination, the reliability assessment report is divided into eight distinct planning areas (Humboldt, North Coast/Bay, Central Coast/Los Padres, Northern Valley, Central Valley, San Joaquin Valley, Greater Bay Area, 500 kV System). In addition, since PG&E's transmission system is a summer electric demand peaking system, PG&E experiences its most limiting critical conditions during the summer months. Therefore, PG&E's transmission reliability assessment focuses primarily on projected summer peak electric demand levels varying over a range of yearly load forecasts. However, to ensure PG&E's transmission system cover a range of lower demand levels or seasons other than summer peak, PG&E has also performed winter peak (Humboldt, North Coast/Bay, San Francisco/Peninsula and Central Coast) and summer off-peak reliability studies (PG&E System off-peak and PG&E's San Joaquin Valley off-peak study). Furthermore, assessments of the 500 kV systems are performed using a 1-in-5 year adverse weather condition, while the sub-transmission system assessments are performed using a 1-in-10 year adverse weather condition. Base cases modeling PG&E's transmission system are developed annually and model major path flows, projected firm transfers, all existing and planned facilities, as well as normal operating procedures. To accurately analyze voltage performance and to ensure adequate reactive resources are available to meet system performance, all planned and available static and dynamic reactive devices, such as Static Var

Compensators and capacitors are modeled in the base cases. After ensuring that all the facilities are modeled, PG&E performs the reliability assessment of the transmission system to examine the thermal loading and voltage limits and, where needed, dynamic response to determine if the system performs within acceptable criteria.

In addition to NERC compliance with NERC reliability planning standards, as a registered Transmission Planner, PG&E must also fulfill the following responsibilities: maintenance of transmission system models, collection of required information for planning purposes, evaluation and documentation of transmission plans and coordination with other neighboring plans. The registered Transmission Planner is expected to coordinate and jointly plan with other Transmission Planners, as appropriate, to ensure new facilities do not adversely affect the reliability of neighboring transmission systems. A copy of NERC's reliability planning standards as well as the roles and responsibilities within NERC's Reliability Functional Model can be reviewed under NERC's website (www.nerc.com).

Since this plan was developed following the CAISO's transmission planning stakeholder process, interested market participants were also involved in the development of this plan. This transmission plan serves as PG&E's NERC Compliance documentation of its reliability assessment, planned transmission projects, as well as its documentation of coordination with neighboring utility plans.

Improving Transmission Access for Renewable Generation

There are a number of areas in California, and in the WECC region, with resources that could potentially enable California to meet its resource needs and also enable PG&E to meet its near and long-term RPS goals.

On a regional basis, PG&E has participated in other planning forums that could improve access to resource areas through potential major network upgrades. Since 2003, PG&E has conducted a number of planning studies that focus on identifying transmission facilities that are needed to connect renewable resources and deliver the associated capacity and energy to load centers in California.

Chapter 7 of this plan discuss some of the recent activities that PG&E is pursuing in meeting its long-term procurement goals to achieve California's renewable energy targets of 33% by 2020 on a delivered basis. Additionally, this chapter includes transmission upgrades needed to access renewable resources and deliver the energy to the load centers. Some of the projects within this transmission plan that are expected to facilitate access for renewable resources and help meet established and future RPS goals are listed below:

- Canada - Pacific Northwest - Northern CA Transmission
- Central California Clean Energy Transmission Project
- Upgraded 230 kV & 115 kV systems between Table Mountain-Rio Oso-Gold Hill
- Upgrade 230 kV system between Vaca Dixon-Contra Costa

- Collinsville Substation
- Gregg-Bellota-Tesla 500 kV Line Project
- Midway-Gregg 500 kV Line
- Midway-Kramer 500 kV Lines Project
- Midway-Antelope 500 KV Transmission Lines Project
- Malin-Cottonwood-Table Mountain and Table Mountain-Tesla 500 kV Transmission Lines

Chapter 7 also covers conceptual 500 kV transmission projects that are projected to supply load growth and to accommodate expected renewable resources as well as for the future need to allow for the shut-down of once-through cooling (OTC) generators (a detailed Greater Bay Area OTC Generation Retirement Study is also found in Appendix 9). A major project discussed in this chapter is the Canada/Pacific Northwest – Northern California Transmission Project for which PG&E recently completed a regional planning project review with the WECC. This proposed project will allow access to significant renewable resources in British Columbia, Alberta and the Pacific Northwest.

Improving Service Reliability

This transmission plan also includes several projects that are expected to improve the overall level of service reliability for end users. Specifically, these projects are targeting improvements in various electric service reliability metrics, such as System Average Interruption Duration Index (SAIDI), System Average Interruption Frequency Index (SAIFI), and Customer Average Interruption Duration Index (CAIDI), among others.

These service reliability improvement projects can involve installation of redundant transmission facilities to mitigate extended service interruptions, as well as the installation of equipment that facilitate a quicker service restoration process following a power outage. Specifically, these projects may involve constructing new transmission lines, installing additional transformers, installing Supervisory Control and Data Acquisition (SCADA) equipment or reconfiguring an electric network to provide greater redundancy.

Coordinating Long Term Plans for PG&E's Transmission System

For ease of discussion, PG&E's assessment and identified long-term transmission plans are described by geographical location within PG&E's service territory in Appendix 6, 2009 Electric Transmission Reliability Assessment Report. Specifically, these areas are:

- Greater Bay Area
- Northern Valley
- Central Valley
- San Joaquin Valley
- Central Coast and Los Padres

- 500 kV Transmission System

Within each of these areas, PG&E has developed various transmission proposals that are coordinated in the near and long-term horizons for the overall purpose of meeting end user needs. This year's transmission plan includes a total of 107 transmission projects. These include 28 new project proposals that were submitted into the CAISO's 2009 Request Window, detailed description of each project is found on Chapters 4 – 6 of this plan. Furthermore, this transmission plan includes brief descriptions of 79 projects that have been previously approved by the CAISO, which are listed in Chapter 3.

In summary, PG&E's transmission plan is a ten-year plan that translates the near and long-term investment plans into a program of improvements to be implemented over the coming years. With this transmission plan, PG&E attempts to select the most cost effective investments for end users, while taking into account NERC compliance, service reliability, as well as related environmental and economic sustainability issues.

Table of Contents

Executive Summary

CHAPTER 1: PG&E'S Electric Transmission Grid Expansion Plan Plan

CHAPTER 2: Electric Transmission Grid Expansion Plan Plan Process

- **Background**
- **Transmission Projects Completed in Year 2009**

CHAPTER 3: Transmission Projects Previously Approved by California ISO

CHAPTER 4: Transmission Projects Proposals Submitted for California ISO Staff Approval (Less than $50 Million)

CHAPTER 5: Transmission Projects Proposals Submitted for California ISO Board Approval (Greater than and equal to $50 Million)

CHAPTER 6: Transmission Projects Proposals Requiring Further Development

CHAPTER 7: Transmission Access to Renewables and 500 kV Transmission Projects

APPENDICES: (Available Upon Request)

- **Appendix 1: Facility Re-rates**
- **Appendix 2: Special Protection Schemes**
- **Appendix 3: Maintenance Projects**
- **Appendix 4: CAISO and Stakeholder Comments**
- **Appendix 5: Acronyms and Abbreviations**
- **Appendix 6: Reliability Assessment Study Report**
- **Appendix 7: PG&E Greater Fresno Area Reliability Assessment Report**
- **Appendix 8: PG&E Area Upgrades for C3ET Project Top 5 Alternatives**
- **Appendix 9: Greater Bay Area Once Through Cooling Generation Retirement Study**

CHAPTER 1

PG&E's Electric Transmission Expansion Plan

PG&E's Electric Transmission Grid Expansion Plan serves as a road map towards PG&E's integrated transmission plan that encompasses, but not limited to the following:

- NERC Compliance
- Improving transmission system access for renewable generation to meet Renewable Portfolio Standard (RPS) goals and targets
- Improving service reliability for end users
- Integrating the above in a coordinated long term plans for PG&E

As the registered Transmission Planner for PG&E's transmission system, PG&E must demonstrate that its transmission system complies with all applicable NERC[1] reliability planning standards. In addition, as the registered Transmission Planner, PG&E must also fulfill the following responsibilities include: maintenance of transmission system models, collection of required information for planning purposes, evaluation and documentation of transmission plans that meet reliability standards and coordinate with other neighboring plans. A copy of NERC's reliability planning standards as well as the roles and responsibilities within NERC's Reliability Functional Model can be reviewed under NERC's website (www.nerc.com). This transmission plan serves as PG&E's documentation of transmission plans that meet applicable reliability standards, as well as coordination with neighboring utility plans.

Development of this transmission plan is coordinated in accordance with the California Independent System Operator's (CAISO's) Tariff, Section 24, as well as the business rules set forth in the CAISO Business Practice Manual for the Transmission Planning Process (TPP) in which PG&E is required to participate, which also align with FERC's Order 890 protocol. The CAISO's Transmission Planning Process is an annual integrated, open, participatory and transparent process that focuses on ensuring reliable, economically efficient, and nondiscriminatory use of the transmission system.

As such, in March 2009, PG&E embarked on the development of this year's transmission plan by participating in the first stage of the process in the development of Unified Planning Assumptions and CAISO Study Plan.

Stakeholders were provided the opportunity to review and comment on the Unified Planning Assumptions prior to incorporation into the final Study Plan by the CAISO.

[1] Effective January 1, 2007, the North American Electric Reliability Council and the North American Electric Reliability Corporation merged, with NERC Corporation being the surviving entity. NERC Corporation was certified as the "electric reliability organization" by the Federal Energy Regulatory Commission on July 20, 2006.
NERC's mission is to improve the reliability and security of the bulk power system in North America. To achieve that, NERC develops and enforces reliability standards; monitors the bulk power system; assesses future adequacy; audits owners, operators, and users for preparedness; and educates and trains industry personnel. NERC is a self-regulatory organization that relies on the diverse and collective expertise of industry participants. As the Electric Reliability Organization, NERC is subject to audit by the U.S. Federal Energy Regulatory Commission and governmental authorities in Canada.

With both the Unified Planning Assumptions and the CAISO Study Plan developed the second stage of the process that is the assessment of system reliability begins. In 2009, PG&E performed the reliability assessment of its transmission facilities. The reliability assessment followed all assumptions agreed upon as well as any applicable planning standards. PG&E follows the CAISO Grid Planning Standards which encompasses both the NERC Planning Standards (FAC 001, FAC 002, and TPL 001 – TPL 004) and the WECC Reliability Standards to ensure the transmission system performance maintains acceptable performance.

PG&E's 2009 Electric Transmission Reliability Assessment Report (Appendix 6) documents the results of the reliability assessment as well as it identifies short and long-term needs at locations where potential transmission expansion is required. The reliability assessment evaluates the performance and robustness of the entire PG&E transmission system, which consists of facilities with nominal voltages of 500 kilovolts (kV), 230 kV, 115 kV, 70 kV and 60 kV. In addition, due to different climates and loading profiles, when conducting the reliability assessment, the transmission system is divided into eight distinct planning areas. The assessment is conducted for the ten-year planning horizon, years 2010, 2011, 2012, 2013, 2014, and 2019. The assessment for the year 2019 is necessary to identify longer lead time projects or facility needs that may have some bearing on transmission decisions that are being made in the near-term.

With the reliability assessment results PG&E then participates in the third stage of the CAISO's TPP, which is project approval and development of the CAISO Transmission Plan. In this phase PG&E uses its assessment results to identify system reliability risks and in turn develop mitigation plans to reliably serve electric customers during normal and contingency conditions. New reliability transmission project proposals are then submitted for CAISO approval through the Request Window. PG&E submitted 28 new project proposals into the CAISO's 2009 Request Window

On an annual basis, PG&E performs studies that test the transmission system's performance against the applicable NERC Planning Standards. This transmission assessment forms the base foundation of the transmission plans that are proposed in this transmission plan. The transmission assessment report, Appendix 6, is available upon request.

Summary of PG&E's Transmission Plan

PG&E's Transmission Plan consists of the projects shown in Tables 1-1, 1-2, 1-3 and 1-4. Table 1-1 shows the projects that have received CAISO approval in previous years and are being implemented. There are seventy-nine projects that have received prior approval.

Table 1-1: Projects Previously Approved by the CAISO

No.	Project Title	Purpose and Benefit	County	Project Scope	Cost Range ($)	Targeted In-Service Date
1	Stone Substation Capacity Increase	Interconnect Customer	Yolo	Distribution Substation Interconnection	1M – 5M	2010
2	Lakeville No. 2 60 kV Line Switch Upgrade	NERC Compliance	Sonoma	Replace limiting switch	< 1M	2010
3	Palermo 115 kV Circuit Breaker and Switch Replacements	NERC Compliance	Butte	Circuit breaker replacement	1M – 5M	2010
4	Humboldt – Harris 60 kV Reconductoring	NERC Compliance	Humboldt	Reconductor 60 kV Line	1M – 5M	2010
5	Borden – Madera 70 kV Reinforcement	NERC Compliance	Madera	Install 70 kV Breaker and Construct Additional Line	5M – 10M	2010
6	7th Standard Substation Capacity Increase	Interconnect Customer	Kern	Distribution Substation Interconnection	1M – 5M	2010
7	Carbona Reliability	NERC Compliance and Operational Flexibility	San Joaquin	Line Reconductor and circuit breaker addition	1M – 5M	2010
8	Humboldt Reactive Support	NERC Compliance	Humboldt	Install SVC at Humboldt Substation	10M – 20M	2010
9	Mesa 115 kV Shunt Capacitors	NERC Compliance	Santa Barbara	Install Shunt Capacitors	1M – 5M	2010
10	Oakland Underground Cable	NERC Compliance	Alameda	Construct New Underground Cable	50M – 100M	2010
11	Moss Landing – Salinas – Soledad 115 kV Reconductoring	NERC Compliance	Monterey	Line Reconductor	10M – 15M	2010

No.	Project Title	Purpose and Benefit	County	Project Scope	Cost Range ($)	Targeted In-Service Date
12	Gregg 230 kV Reactor	NERC Compliance	Madera	Install Shunt Reactors	5M – 10M	2010
13	Daly City Bus Reconfiguration Project	Operational Flexibility	San Mateo	Install breakers and SCADA at Daly City	1M – 5M	2010
14	Pease – Marysville 60 kV Line	NERC Compliance	Yuba and Sutter	Construct New 60 kV Line	10M – 20M	2010
15	Burns Reliability	Operational Flexibility	Santa Cruz	Install a breaker and SCADA at Burns Substation	5M – 8M	2010
16	Salado-Newman 60 kV Line No. 2 Reconductor	NERC Compliance	Stanislaus	Line Reconductor	< 1M	2010
17	Guernsey – Henrietta 70 kV Line Reconductor	NERC Compliance	Kings	Line Reconductor	1M – 5M	2011
18	Garberville Reactive Support	NERC Compliance	Humboldt	Install reactive support at Garberville Substation	5M – 10M	2011
19	Maple Creek Reactive Support	NERC Compliance	Humboldt	Install reactive support at Maple Creek Substation	2M – 5M	2011
20	Sanger – California Ave. 70 kV to 115 kV Voltage Conversion	NERC Compliance	Fresno	70 to 115 kV Conversion	5M – 10M	2011
21	Sanger – Reedley Area Reinforcement	NERC Compliance	Fresno	70 to 115 kV Conversion	20M – 25M	2011
22	Menlo Area 60 kV System Upgrade	NERC Compliance	San Mateo	Reconductor 60 kV Line	5M – 15M	2011
23	Menlo 60 kV Switch Upgrade	NERC Compliance	San Mateo	Replace 60 kV switches at Menlo 60 kV Substation	<1M	2011
24	Gold Hill – Clarksville 115 kV Line Reconductoring	NERC Compliance	El Dorado	Reconductor 115 kV Lines	1M – 5M	2011
25	Atlantic – Lincoln Transmission	NERC Compliance	Placer	Convert 60 kV Facilities to 115 kV and Construct New 115 kV Line	50M – 100M	2011

No.	Project Title	Purpose and Benefit	County	Project Scope	Cost Range ($)	Targeted In-Service Date
26	Bay Meadows 115 kV Reconductoring	NERC Compliance	San Mateo	Reconductor 115 kV Lines	5M – 10M	2011
27	Mendocino Coast Reactive Support	NERC Compliance	Mendocino	Install 10 to 15 MVArs of reactive support at Fort Bragg or Big River 60 kV Substations	5M – 10M	2011
28	Tesla 115 kV Capacity Increase	NERC Compliance	San Joaquin	Increase Transmission Capacity	10M – 20M	2011
29	Half Moon Bay Reactive Support	NERC Compliance	San Mateo	Increase 60 kV Transmission Capacity	5M – 10M	2011
30	Del Monte – Fort Ord 60 kV Reinforcement	NERC Compliance	Monterey	Line Reconductor	5M – 10M	2011
31	Shepherd Substation Interconnection	NERC Compliance	Fresno	New Substation and Line Loop	8M – 10M	2011
32	Tri-Valley Voltage Control	NERC Compliance	Alameda	Add shunt reactors at Vineyard and North Dublin Substation	10M – 15M	2011
33	Lakeville – Ignacio #2 230 kV Line	NERC Compliance	Sonoma	Re-establish the Lakeville – Ignacio #2 230 kV Line	1M – 5M	2011
34	Santa Cruz 115 kV Reinforcement	NERC Compliance	Santa Cruz	Rebuild the Green Valley-Rob Roy line into a double-circuit line and install reactive support at Camp Evers	10M – 15M	2011
35	Table Mountain – Rio Oso 230 kV Line Reconductor and Tower Raises	NERC Compliance	Yuba and Sutter	Increase substation equipment capacity	1M – 5M	2011
36	Hollister 115 kV Reconductoring	NERC Compliance	San Benito	Line Reconductor	20M – 50M	2011
37	East Nicolaus 115 kV Area Reinforcement	NERC Compliance	Sutter	Increase 115 kV Transmission Capacity	10M – 20M	2011

No.	Project Title	Purpose and Benefit	County	Project Scope	Cost Range ($)	Targeted In-Service Date
38	Vaca Dixon – Birds Landing 230 kV Reconductoring	NERC Compliance	Solano	Reconductor 230 kV Lines	20M – 50M	2011
39	Midway – Renfro 115 kV Line Reconductor	NERC Compliance	Kern	Line Reconductor	17M – 22M	2012
40	San Justo Distribution Substation	NERC Compliance	San Benito	Construct a new substation and line loop	5M – 10M	2012
41	Herndon 230/115 kV Transformer Installation	NERC Compliance	Fresno	Install a 3rd 230/115 kV Transformer at Herndon Substation	10M – 15M	2012
42	Missouri Flat – Gold Hill 115 kV Line	NERC Compliance	Calaveras	Line Reconductor	10M – 20M	2012
43	Wheeler Ridge 230/70 kV Transformer	NERC Compliance	Kern	Add a Second 230/70 kV Bank	5M – 10M	2012
44	Cooley Landing 115/60 kV Transformer Capacity Upgrade	NERC Compliance	San Mateo	Replace Cooley Landing 115/60 kV Transformer No. 1 by 2010 and No. 2	10M – 20M	2012
45	Moraga Transformer Capacity Increase	NERC Compliance	Contra Costa	Replace Moraga 230/115 kV Banks	10M – 20M	2012
46	Palermo – Rio Oso 115 kV Line Reconductoring	NERC Compliance	Yuba and Sutter	Line Reconductor	50M-60M	2012
47	Gold Hill – Horseshoe 115 kV Reinforcement	NERC Compliance	Sacramento and Placer	Line Reconductor	5M – 10M	2012
48	Valley Springs 230/60 kV Transformer Addition	NERC Compliance and Operational Flexibility	San Joaquin	Add a second Valley Springs Transformer rated at 200 MVA	8M – 10M	2012
49	Humboldt 115/60 kV Transformer Nos. 1 & 2 Replacement	NERC Compliance	Humboldt	Transformer Replacement	10M – 15M	2012
50	West Point – Valley Springs 60 kV Line	NERC Compliance	Calaveras	Reconductor 60 kV Line	5M – 10M	2012
51	Metcalf – Evergreen 115 kV	NERC Compliance	Santa Clara	Reconductor 115 kV Lines	5M – 10M	2013

No.	Project Title	Purpose and Benefit	County	Project Scope	Cost Range ($)	Targeted In-Service Date
52	Rio Oso 230/115 kV Transformer Upgrades	NERC Compliance	Sutter	Transformer Replacements	10M – 20M	2013
53	Natividad Distribution Substation	NERC Compliance	Monterey	Construct a new substation, line reconductor and line loop	15M – 20M	2013
54	Ravenswood-Cooley Landing 115 kV Reconductoring Project	NERC Compliance	San Mateo and Santa Clara	Line Reconductor	5M – 10M	2013
55	Watsonville Voltage Conversion	NERC Compliance	Santa Cruz	60 to 115 kV Conversion	20M – 25M	2013
56	Cooley Landing-Los Altos 60 kV Reconductoring	NERC Compliance	Santa Clara	Line Reconductor	5M – 10M	2013
57	Cortina 60 kV Reliability	NERC Compliance	Colusa	Install Additional Transformer	5M – 10M	2013
58	Tesla – Newark 230 kV Path Upgrade	NERC Compliance	Contra Costa	Increase 230 kV Capacity	5M – 10M	2013
59	Caruthers – Kingsburg 70 kV Line Reconductor	NERC Compliance and Operational Flexibility	Fresno	Line Reconductor and New Line	10M – 15M	2013
60	Evergreen-Mabury Conversion	NERC Compliance	Santa Clara	60 to 115 kV Conversion	10M – 15M	2013
61	Fulton-Fitch Mountain 60 kV Line Reconductoring	NERC Compliance	Sonoma	Line Reconductor	3M – 5M	2013
62	Crazy Horse Switching Station	NERC Compliance	San Benito	Construct New Switching Station	20M – 50M	2013
63	Contra Costa – Moraga 230 kV Line Reconductoring	NERC Compliance	Contra Costa	Reconductor 230 kV Lines	10M – 20M	2014
64	Pittsburg – Tesla 230 kV Reconductoring	NERC Compliance	Contra Costa	Increase 230 kV Capacity	10M – 20M	2014
65	Ignacio – San Rafael and Ignacio – Las Gallinas 115 kV Reconductoring	NERC Compliance	Marin	Reconductor 115 kV Lines	5M – 10M	2014

No.	Project Title	Purpose and Benefit	County	Project Scope	Cost Range ($)	Targeted In-Service Date
66	Vaca Dixon – Lakeville 230 kV Reconductoring	NERC Compliance	Solano	Line Reconductor	50M – 100M	2014
67	Newark – Ravenswood 230 kV Line	NERC Compliance	San Mateo and Alameda	Reconductor Newark – Ravenswood and Tesla – Ravenswood 230 kV Line	10M – 20M	2014
68	Pittsburg 230/115 kV Transformer Capacity Increase	NERC Compliance	Contra Costa	Install a third 230/115 kV transformer at Pittsburg	10M – 20M	2014
69	South of San Mateo Capacity Increase	NERC Compliance	San Mateo	Increase 115 kV Transmission Capacity	10M – 20M	2014
70	San Mateo-Bair 60 kV Reconductoring	NERC Compliance	San Mateo	Line Reconductor	5M – 10M	2014
71	Metcalf – Piercy & Swift and Newark – Dixon Landing 115 kV Upgrade	NERC Compliance	Santa Clara	Reconductor 115 kV Lines	5M – 10M	2015
72	Glenn 60 kV Line No. 1 Reconductor	NERC Compliance	Glenn	Line Reconductor	6M – 8M	2015
73	Lodi-Industrial 60 kV Line Switch Upgrade	NERC Compliance	San Joaquin	Replace limiting switches with larger ones	< 1M	2015
74	Herndon 115 kV Circuit Breaker Replacement	NERC Compliance	Fresno	Replace circuit breaker No. 122 rated at 2,000 amps or larger	1M – 2M	2015
75	Occidental of Elk Hills 230 kV Interconnection	Interconnect Customer	Kern	Interconnect Occidental's new substation	< 1M	2015
76	Woodward 115 kV Reinforcement	NERC Compliance	Fresno	Reconductor 115 kV Lines	5M – 10M	2016
77	Clearlake 60 kV System Reinforcement	NERC Compliance	Lake	New 115 kV line and new 115/60 kV transformer	20M – 30M	2016
78	Soledad Transformer Increase Project	NERC Compliance	Monterey	Replace transformers at Soledad Substation with 200 MVA Transformers	10M - 20M	2016

No.	Project Title	Purpose and Benefit	County	Project Scope	Cost Range ($)	Targeted In-Service Date
79	San Leandro – Oakland J 115 kV Line Reconductoring	NERC Compliance	Contra Costa	Reconductor San Leandro - Oakland J 115 kV Line	10M - 20M	2017

Table 1-2 lists the projects with a cost of less than $50 million that PG&E submitted for CAISO approval this year. There are nineteen projects costing less than $50 million seeking CAISO approval this year.

Table 1-2: Projects <$50M Needing Approval this Year by CAISO

No.	Project Title	Purpose and Benefit	County	Project Scope	Cost Range ($)	Targeted In-Service Date
1	Pit 3 - Pit 1 and Pit 3 - Round Mountain 230 kV Line Relays Replacement	NERC Compliance	Shasta	Replace limiting protection equipment on 230 kV lines	1M	2010
2	Sycamore Transmission Project	NERC Compliance	Butte	Develop manually operated switching plan or install SPS at Sycamore	1M – 2M	2010
3	Red Bluff Transmission Project	NERC Compliance	Shasta	Develop manually operated switching plan or install SPS at Red Bluff	3M – 5M	2010
4	West Sacramento Transmission Project	NERC Compliance	Yolo	Develop manually operated switching plan or install SPS at West Sacramento	1M – 2M	2010
5	Los Padres Transmission Project	NERC Compliance	San Luis Obispo and Santa Barbara	Develop manually operated switching plan or install SPS at Mesa and Santa Maria	1M – 2M	2010
6	Moraga-Oakland "J" SPS Project	NERC Compliance	Alameda and Contra Costa	Develop manually operated switching plan or install SPS at Oakland "J" and Moraga	1M - 3M	2011
7	Pittsburg-Lakewood SPS Project	NERC Compliance	Contra Costa	Develop manually operated switching plan or install SPS at Clayton and Lakewood	1M - 3M	2011
8	Stockton 'A' – Weber 60 kV Line No. 1 and 2 Reconductor	NERC Compliance	San Joaquin	Reconductor Lines	5M – 10M	2011
9	Dumbarton – Newark 115 kV Line Capacity Upgrade	NERC Compliance	Alameda	Replace limiting substation equipment at Dumbarton	1M	2011

No.	Project Title	Purpose and Benefit	County	Project Scope	Cost Range ($)	Targeted In-Service Date
10	Divide Transmission Project	NERC Compliance	Santa Barbara	Develop manually operated switching plan or install SPS at Divide	1M – 2M	2011
11	Corcoran 115/70 kV Transformer Replacement Project	NERC Compliance	Kings	Replace 115/70 kV Transformer and new Regulator	10M – 20M	2012
12	Weber 230/60 kV Transformer Nos. 2 and 2A Replacement	NERC Compliance	San Joaquin	Replace 230/60 kV Transformer	8M – 15M	2013
13	Reedley-Orosi 70 kV Line Reconductor	NERC Compliance	Tulare	Reconductor line and install new capacitors at Dinuba	2.5M – 4M	2013
14	Morro Bay 230/115 kV Transformer Addition Project	NERC Compliance	San Luis Obispo	Install new 230/115 kV transformer	8M – 10M	2013
15	Cottonwood-Red Bluff 60 kV Line Reconductor	NERC Compliance	Tehama	Reconductor line	10M – 15M	2014
16	Mountain View/Whisman–Monta Vista Reconductoring	NERC Compliance	Santa Clara	Reconductor lines	10M – 15M	2014
17	Reedley-Dinuba 70 kV Line Reconductor	NERC Compliance	Tulare	Reconductor line	6M – 8M	2014
18	Ashlan-Gregg and Ashlan-Herndon 230 kV Line Reconductor	NERC Compliance	Fresno	Reconductor lines	15M – 20M	2015
19	San Francisco 115 kV Series Reactors Project	NERC Compliance	San Francisco	Install series reactors on HP-1 and HP-3 cables	5M – 10M	2019

Table 1-3 lists the one project with a cost greater than $50 million that PG&E submitted for CAISO approval this year.

Table 1-3: Projects ≥$50M Needing Approval this Year by CAISO

No.	Project Title	Purpose and Benefit	County	Project Scope	Cost Range ($)	Targeted In-Service Date
1	Vaca Dixon – Davis 115 kV Conversion	NERC Compliance	Sacramento and Yolo	60 to 115 kV Conversion	70M – 100M	2014

PG&E develops projects to resolve potential NERC reliability issues, increase reliability to customers, allow for the import of renewable and conventional generation, among other rationales. Projects that are proposed may require further evaluation and development prior to seeking CAISO approval. Table 1-4 shows projects that have been proposed that are conceptual and need further analysis before CAISO approval is required. There are eight projects that require further analysis.

Table 1-4: Projects Requiring Further Analysis

No.	Project Title	Purpose and Benefit	County	Project Scope	Cost Range ($)	Targeted In-Service Date
1	Tesla-Weber 230 kV Line	NERC Compliance	San Joaquin	Replace limiting equipment on line	1M – 5M	2015
2	Oakhurst 115 kV Tap Reinforcement	NERC Compliance	Madera	Line Reconductor or New Line	25M – 40M	2015
3	Eight Mile Road-Tesla 230 kV Lines Reconductor	NERC Compliance	Stockton	Line Reconductor	30M – 40M	2016
4	Exchequer-Yosemite 70 kV Line Reconductor	NERC Compliance	Mariposa	Line Reconductor	5M – 10M	2016
5	South of Palermo 115 kV Reinforcement	NERC Compliance	Butte	Line Reconductor	50M – 60M	2018
6	Atlantic - Placer Voltage Conversion	NERC Compliance	Placer	60 to 115 kV Conversion	50M – 60M	2019
7	San Pablo/Point Pinole 115 kV Voltage Support	NERC Compliance	Contra Costa	Install voltage support devices or new 115 kV facility	10M - 20M	2019
8	Gualala Reactive Support	NERC Compliance	Mendocino	Install reactive support at Gualala	1M – 5M	2019

CHAPTER 2

Background of Electric Transmission Grid Expansion Plan Process

In accordance with the California Independent System Operator Corporation's (CAISO's Tariff, Section 24, as well as the business rules set forth in the CAISO Business Practice Manual, Pacific Gas and Electric Company (PG&E) is required to participate in the annual CAISO Transmission Planning Process (TPP). Additionally, PG&E is to perform NERC's Transmission Planner functions, including conducting local and bulk transmission planning studies of its service area; propose new facilities; prepare meaningful cost estimates for proposed and alternative facilities; conduct interconnection studies, facility studies, participate in regional/sub-regional planning groups, and construct projects when designated under the CAISO tariff.

Development of PG&E's annual transmission grid expansion plan is coordinated within the CAISO's TPP, which encourages all interested market participants to participate and provide comments and input on PG&E's transmission plans. The CAISO's TPP is structured into three stages, these are:

- Development of Unified Planning Assumptions and CAISO Study Plan
- Performing technical studies for assessment of system reliability
- Documentation of technical study results and development of transmission plans proposals.

The second phase of the Transmission Planning Process is documenting the technical studies in the reliability assessment report. The PG&E's 2009 Electric Transmission Reliability Assessment Report can be reviewed in Appendix 6, which is available upon request due to its large volume. Appendix 6 includes the identified transmission area concerns over the next ten years, along with the identified transmission upgrade projects.

The analyses conducted for this reliability assessment report included power flow, post-transient, transient stability and voltage stability studies. Over 2,000 planning contingencies were analyzed to evaluate the effect of single element and selected multiple element unavailability. The analyses covered the entire PG&E transmission system, which included 60, 70, 115, 230 and 500 kV transmission system facilities.

The final results from the assessment report will be used to initiate the third phase of the process which is the development of new project proposals and submittal for CAISO management and Board approval. In addition to the new project proposals, the Expansion Plan list the recently completed projects, provide a status update of the projects previously approved by the CAISO and the conceptual projects that need additional analyses because they lack a clear scope, cost and schedule.

Responsibilities and Objectives

As part of the CAISO Transmission Planning Process, PG&E performed the following with the assistance from the CAISO and Stakeholder Group:

- Developed transmission base cases that model forecast conditions
- Conducted a transmission system performance assessment of its facilities to maintain acceptable system voltages and thermal loadings
- Identified system reliability risks to comply with the CAISO Grid Planning Standards
- Developed mitigation plans to reliably serve electric customers during normal and contingency conditions for years 2010 to 2014
- Provide proposals, as appropriate, to reliably serve electric customers during normal and contingency conditions for years 2015 to 2019
- Consider lead times where necessary for successful implementation of the projects
- Addressed all CAISO recommendations identified in the CAISO Transmission Planning Process that relate to PG&E's transmission system
- Assess selected transmission upgrades proposed by the CAISO and stakeholders

Criteria and Guidelines

PG&E used the CAISO grid planning criteria to assess the PG&E transmission system. The CAISO Grid Planning Criteria encompasses the NERC[1] planning standards and the WECC[2] reliability criteria. A copy of NERC's reliability planning standards as well as the roles and responsibilities within NERC's Reliability Functional Model can be reviewed under NERC's website at www.nerc.com. The CAISO grid planning criteria are posted on the CAISO's web site at www.caiso.com.

[1] North American Electric Reliability Corporation
[2] Western Electricity Coordinating Council

Transmission Expansion Projects Completed in Year 2009

PG&E completed 14 transmission grid infrastructure upgrades in 2009. These upgrades included reconductoring of transmission lines, replacement of transformers, and construction of new line and substation facilities. The following table summarizes the completed projects.

Table 2-1: Completed Transmission Projects in 2009

No.	Project No.	Project Title	In-Service Date
1	T776	Monta Vista 115/60 kV Transformer	Feb-09
2	T1078	Larkin Circuit Breaker 192	Mar-09
3	T980	Martin 115/60 kV Transformer Replacement	Mar-09
4	T177B	West Sacramento – Brighton 115 kV Reconductoring	Apr-09
5	T1024	Camden 70 kV Breaker Installation	Apr-09
6	T1074	Wilson – Oro Loma 115 kV Line Reconductoring	Apr-09
7	T571	Lakeville 230/60 kV Transformer Capacity Increase	Apr-09
8	T897	Martin – Hunters Point 115 kV Cable	Apr-09
9	T758A	Brighton 230/115 kV Transformer Replacement	May-09
10	T444	Placer – Gold Hill 115 kV Reinforcement	May-09
11	T998	Potrero Bus Parallel Circuit Breaker	Jun-09
12	T1124	Kyoho Manufacturing California 115 kV Interconnection	Jul-09
13	T772	Contra Costa – Las Positas 230 kV Line	Oct-09
14	T972A	South of Birds Landing 230 kV Reconductoring	Dec-09

T776: Monta Vista 115/60 kV Transformer

(In Service Date – February 2009)

PROJECT INFORMATION

The project scope is to install a 115/60 kV transformer at Monta Vista Substation. This transformer is planned to be sized at 200 MVA or higher.

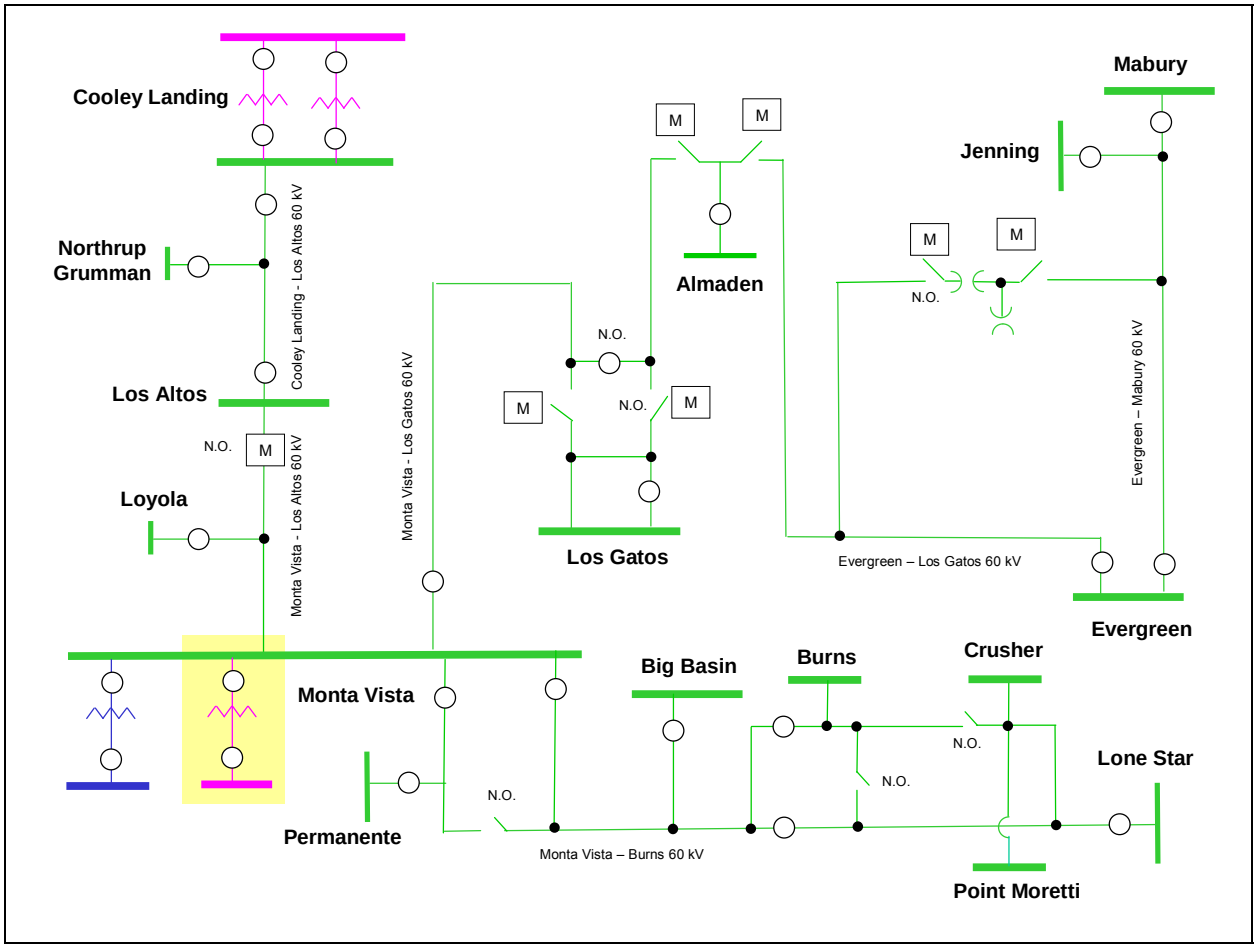

Figure 2-1: Scope Diagram

T1078: Larkin Circuit Breaker 192

(In Service Date - March 2009)

Project Information

This project proposes to operate Larkin CB 192 normally closed including the work to install four sets (12) of "slip-on" current transformers, "doughnut" type 3000/5 MR, on Larkin distribution transformer banks Nos. 3, 4 and 6. And circuit breaker 172 for XY-1 cable at switch 171. It will also install (10) boxes of dual overcurrent SEL-501 relays on distribution bank Nos. 1, 2, 3, 4, and 6 as well as adjust current transformer ratios and metering replacement at Martin, Potrero and Mission Substations.

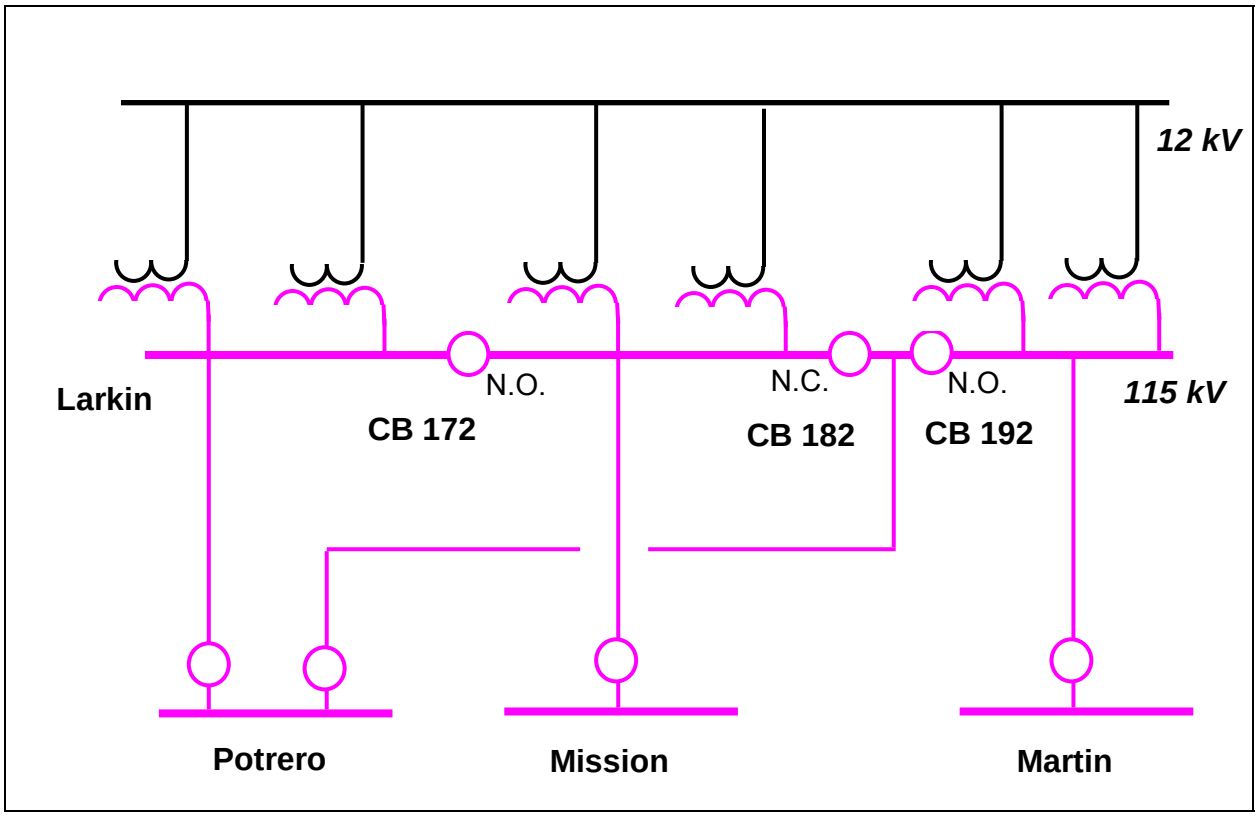

Figure 2-2: Scope Diagram

T980: Martin 115/60 kV Transformer Replacement

(In Service Date – March 2009)

PROJECT INFORMATION

The project scope is to install a second Martin 115/60 kV transformer. This new transformer is rated to handle 200 MVA.

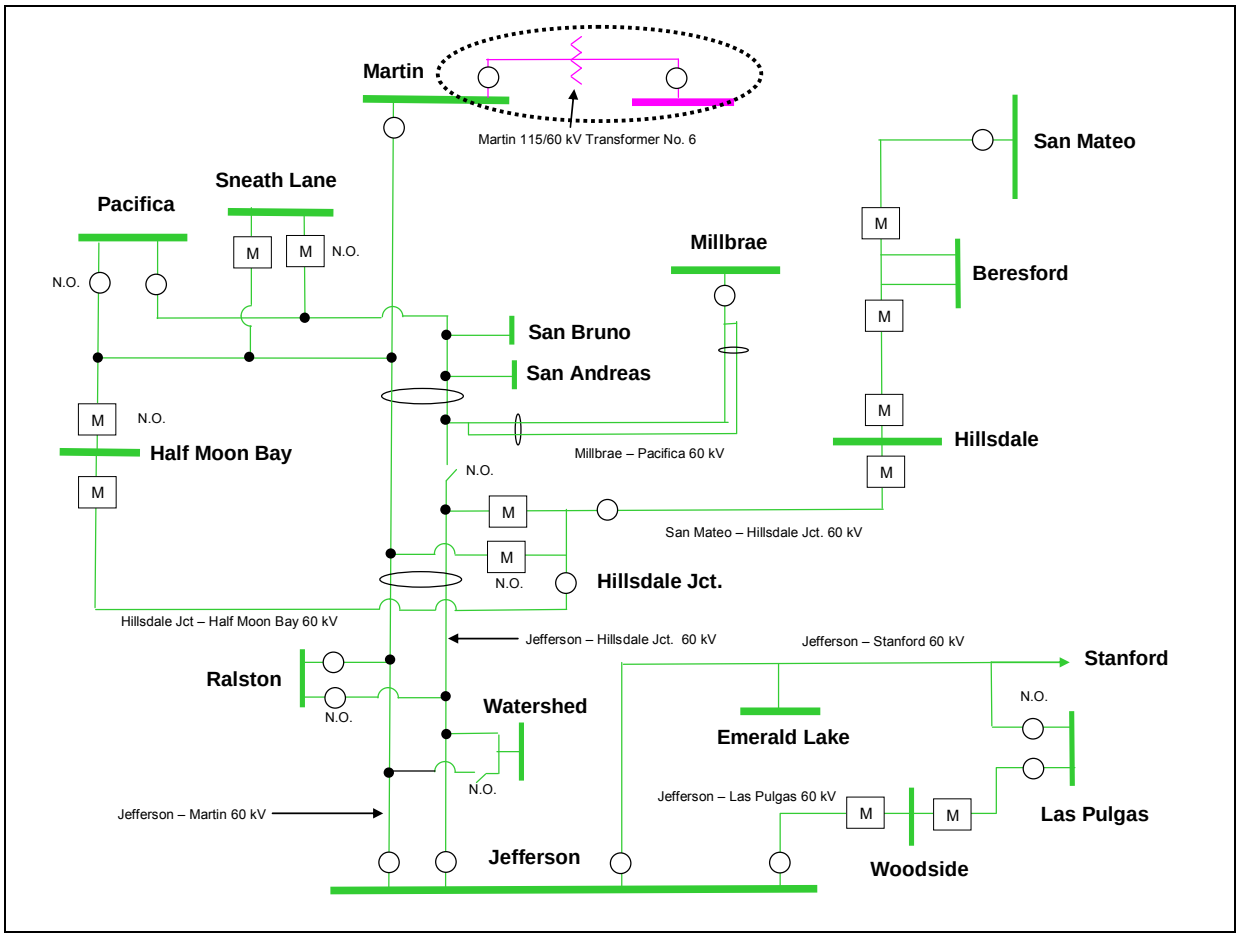

Figure 2-3: Scope Diagram

T177B: West Sacramento – Brighton 115 kV Reconductoring

(In Service Date – April 2009)

PROJECT INFORMATION

This project proposes to reconductor 14 miles of the West Sacramento-Brighton 115 kV Line and the 14 miles of the Rio Oso-West Sacramento 115 kV Line with 477 SSAC conductors.

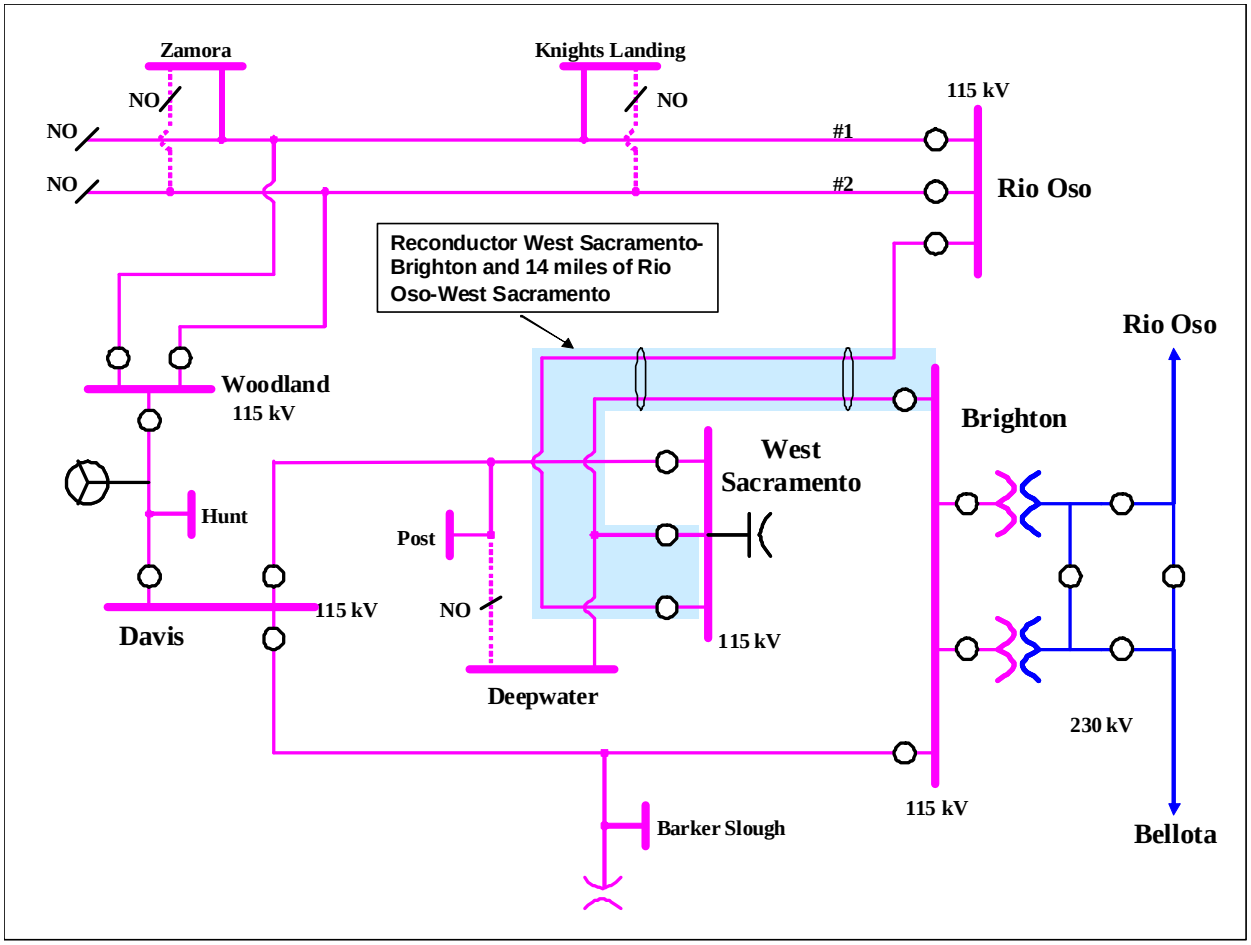

Figure 2-4: Scope Diagram

T1024: Camden 70 kV Breaker Installation

(In Service Date – April 2009)

PROJECT INFORMATION

Install a 70 kV bus with circuit switcher with SCADA, and two 70 kV line circuit breakers with SCADA at Camden Substation.

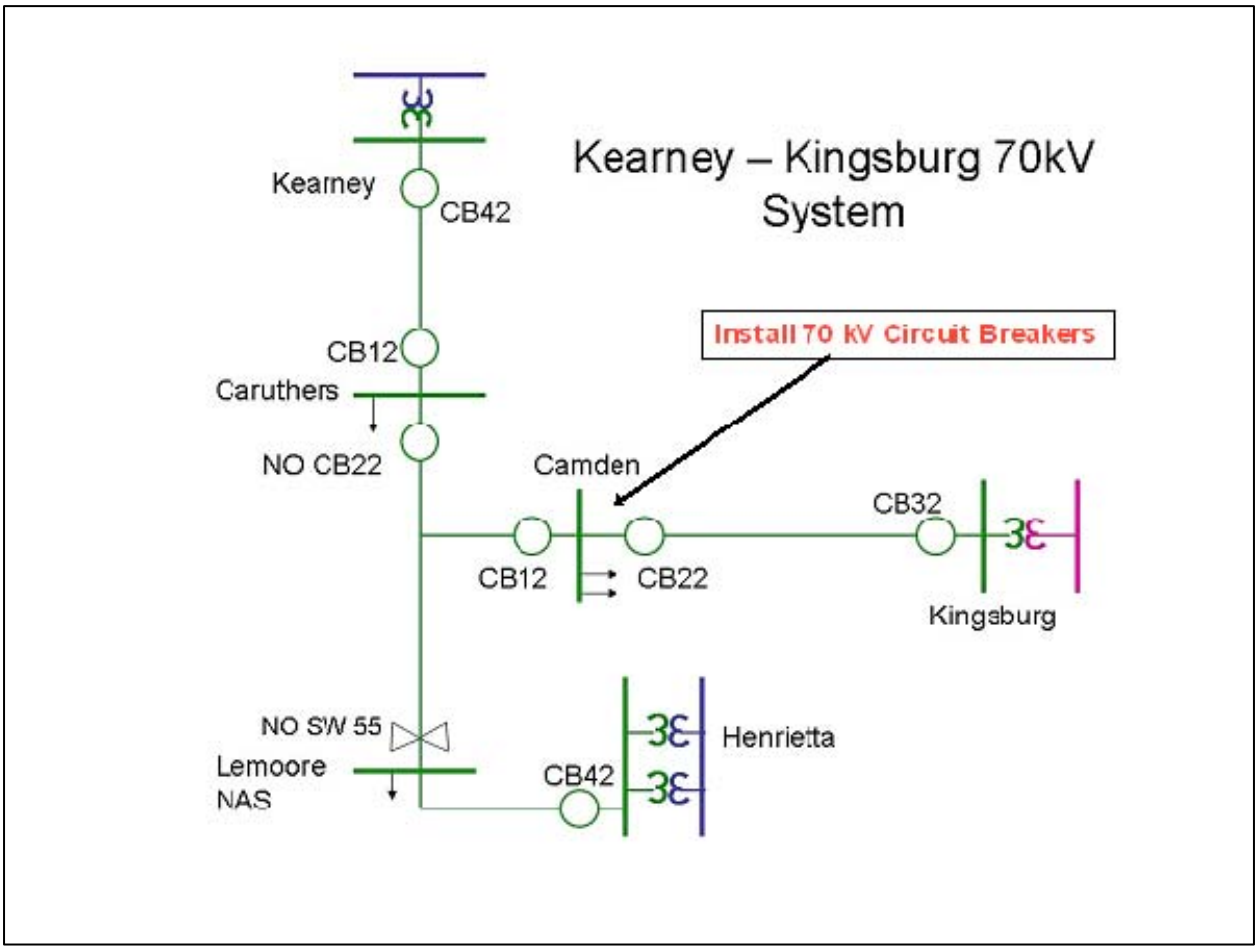

Figure 2-5: Proposed Scope Diagram

T980: Wilson – Oro Loma 115 kV Line Reconductor

(In Service Date – April 2009)

PROJECT INFORMATION

The project scope is to reconductor 5.25 miles of 115 kV line between Wilson Substation (Tower 2/4) and Le Grand Junction (Tower 8/2) with 715.5 AAC conductor or equivalent for a summer normal rating of 126 MVA and a summer emergency rating of 148 MVA. In addition, this work would also include modifying and upgrading relay protection at remote terminals located at Wilson and Oro Loma Substations. If necessary, this work will also include obtaining necessary land and environmental permitting to complete reconductoring work.

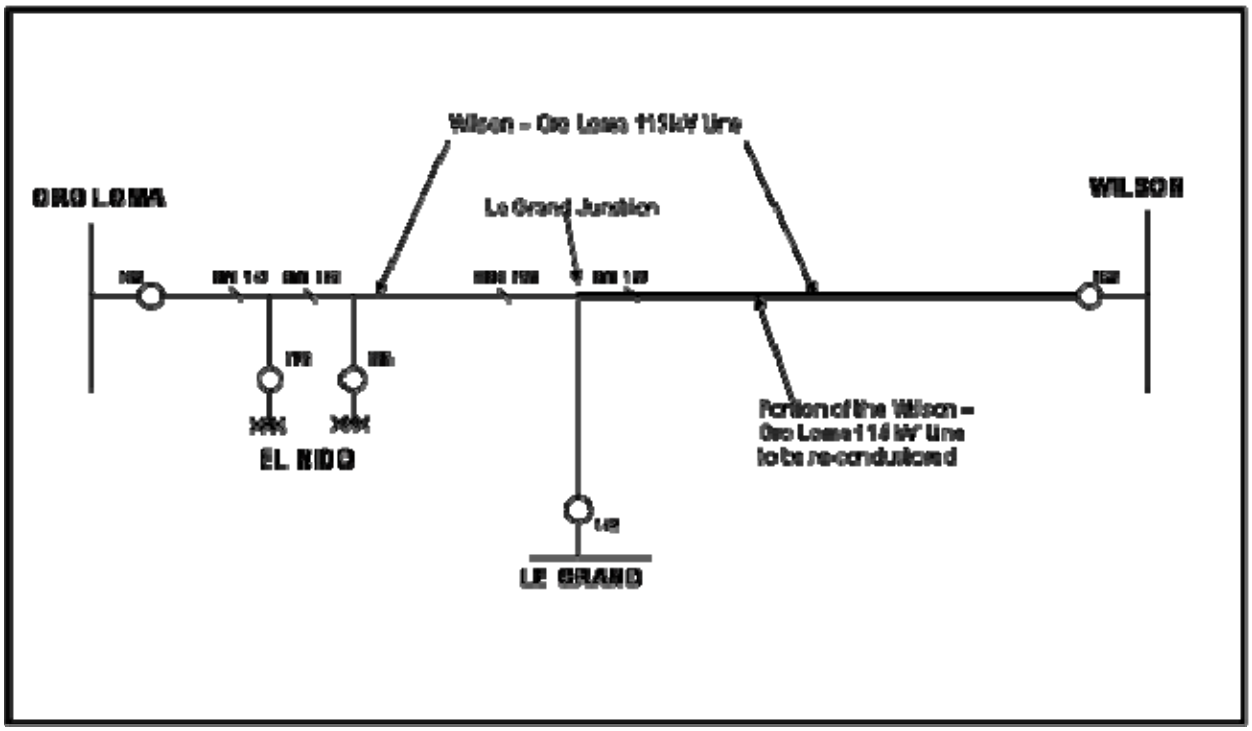

Figure 2-6: Scope Diagram

T571: Lakeville 230/60 KV Transformer Capacity Increase

(In Service Date – April 2009)

PROJECT INFORMATION

This project proposes to install a second 230/60 kV transformer at Lakeville Substation. This new transformer will be rated at 200 MVA.

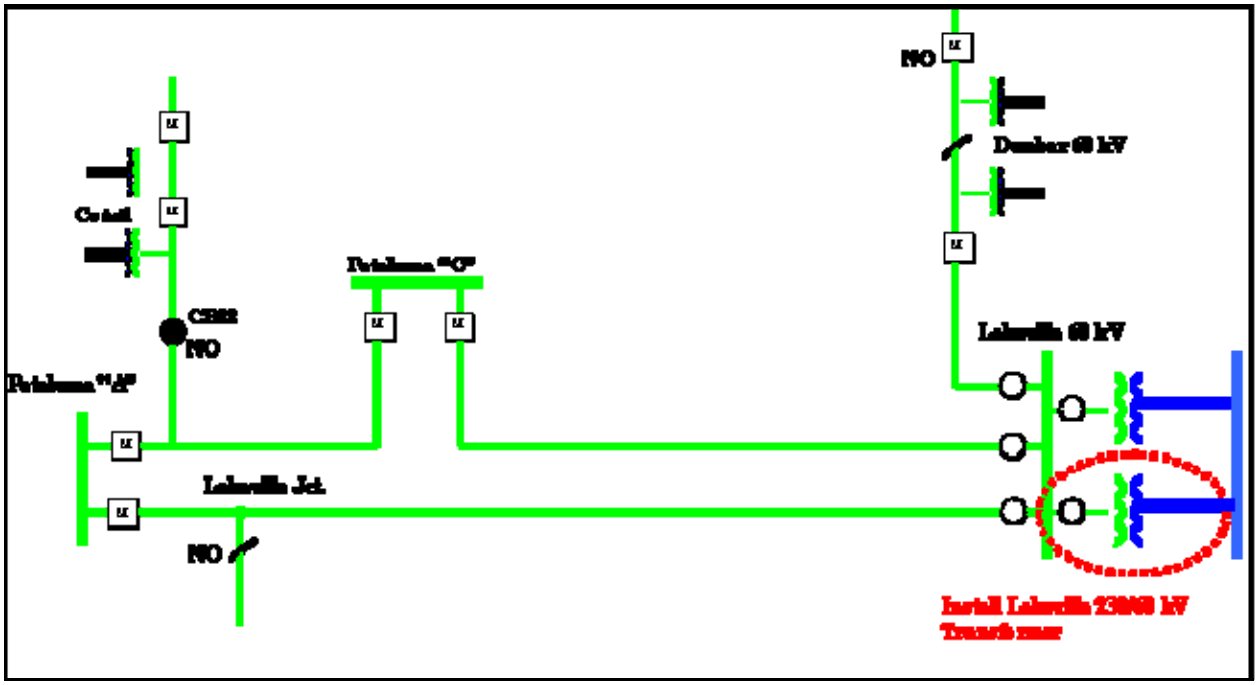

Figure 2-7: Scope Diagram

T897: Martin – Hunters Point 115 kV Cable

(In Service Date – April 2009)

PROJECT INFORMATION

The project proposes to construct an additional 115 kV underground cable between Martin and Hunters Point substations.

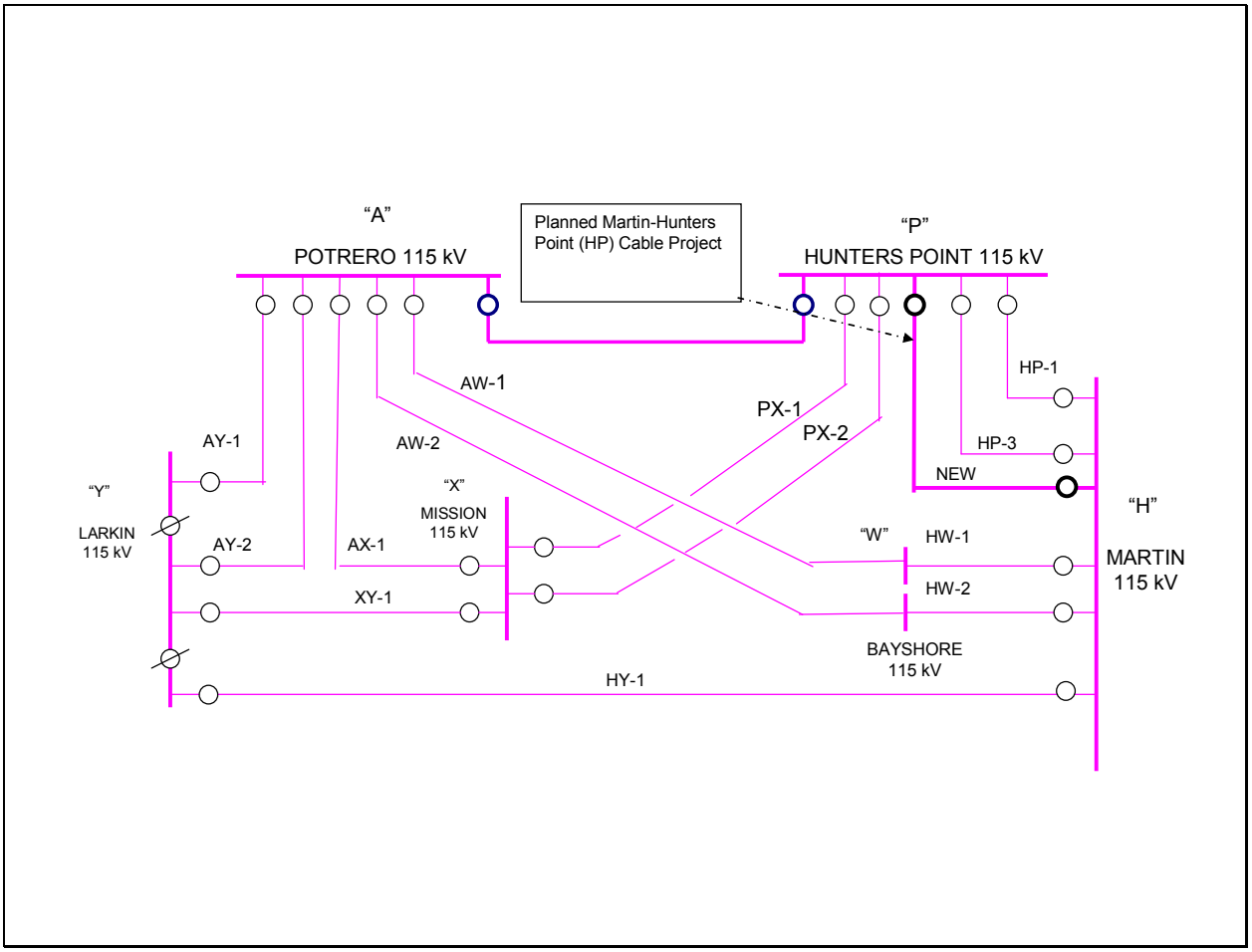

Figure 2-8: Scope Diagram

T758A: Brighton 230/115 kV Transformer Replacement

(In Service Date – May 2009)

PROJECT INFORMATION

This project will replace the existing Brighton 230/115 kV Transformer Bank No. 9 with a new 420 MVA, 230/115 kV three-phase, load-tap-changer (LTC) transformer and install a new 230 kV Modular, Protection, Automation and Control (MPAC) building at Brighton Substation.

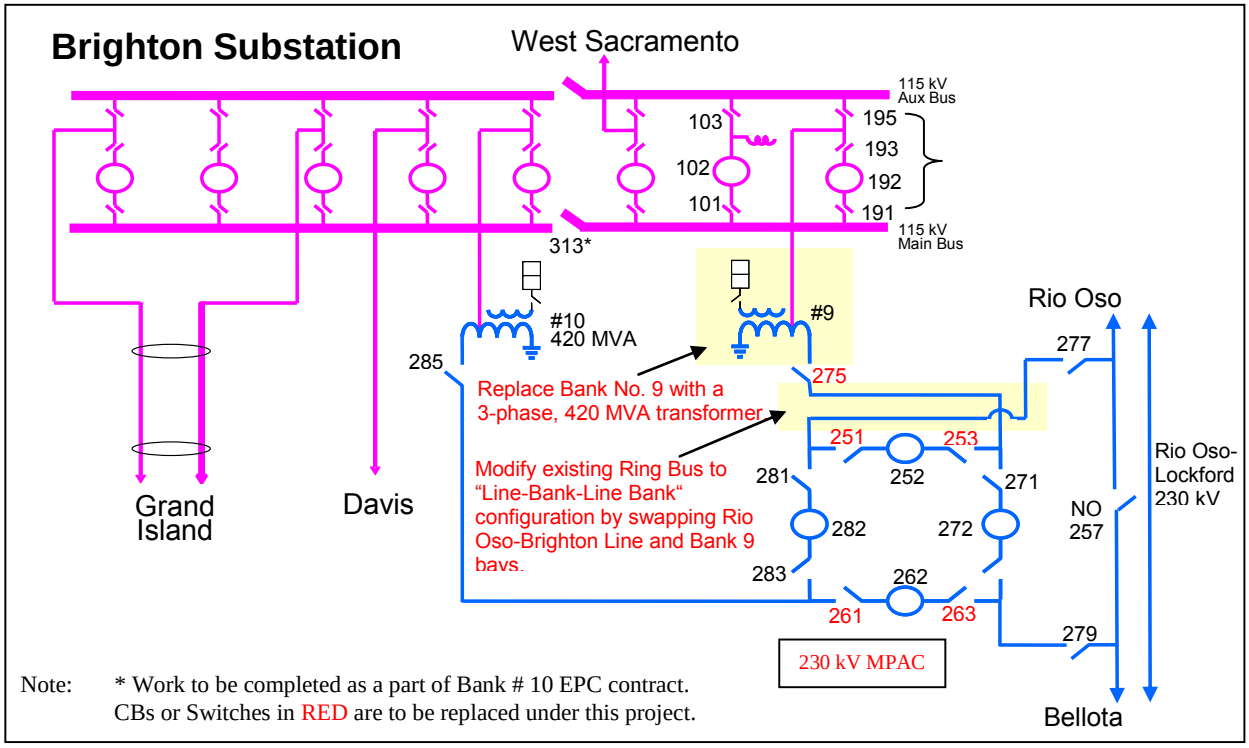

Figure 2-9: Scope Diagram

T444: Placer – Gold Hill 115 kV Reinforcement

(In Service Date – May 2009)

PROJECT INFORMATION

The project scope is to reconductor the limiting conductors (24 miles) from Placer to Gold Hill substations on both Placer – Gold Hill 115 kV lines with 477 ACSS conductors.

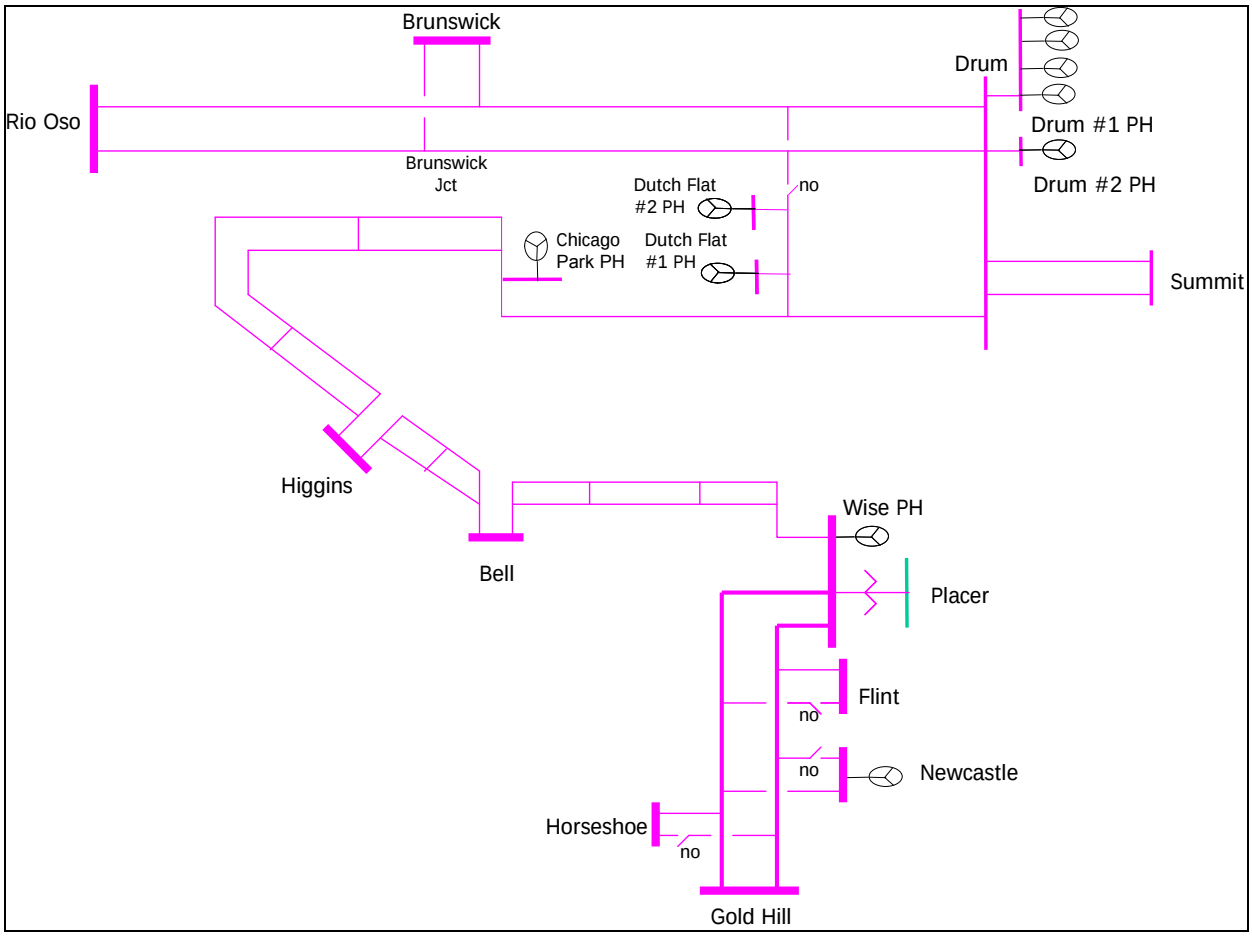

Figure 2-10: Scope Diagram

T998: Potrero Bus Parallel Circuit Breaker

(In Service Date – June 2009)

PROJECT INFORMATION

The project scope is to install a 115 kV bus parallel breaker at Potrero Substation.

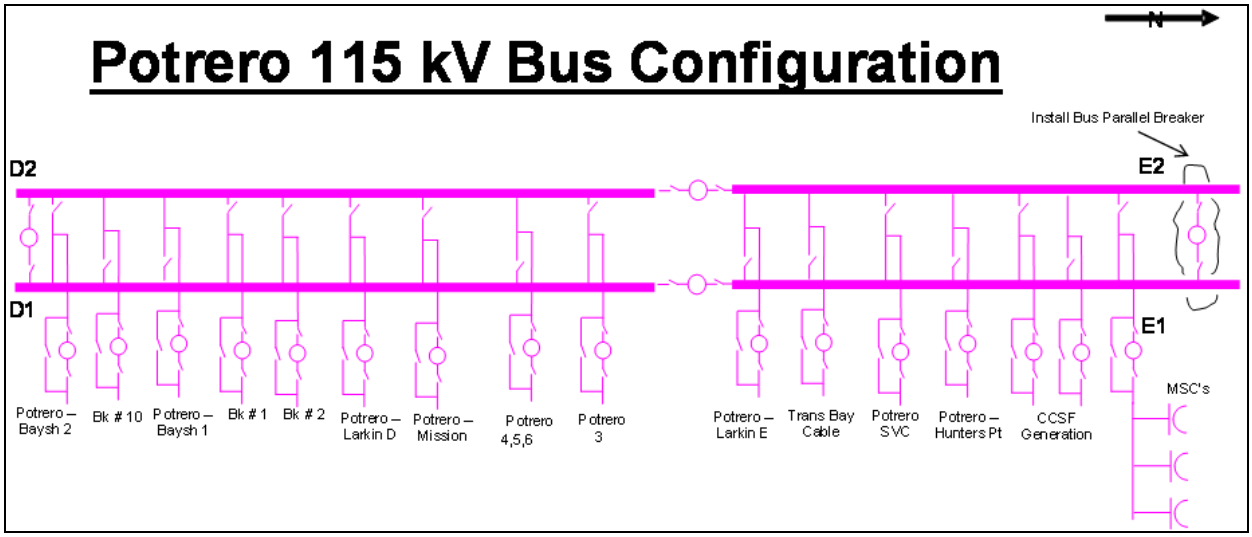

Figure 2-11: Scope Diagram

T1124: Kyoho Manufacturing California 115 kV Interconnection

(In Service Date – July 2009)

PROJECT INFORMATION

The preferred plan is to interconnect KHMCA's substation to the electric grid by tapping off PG&E's Stockton "A" – Lockeford – Bellota #2 115 kV Line.

The new tap line will be tapped on the Stockton "A" – Lockeford – Bellota Line No. 2 near tower 11/80.

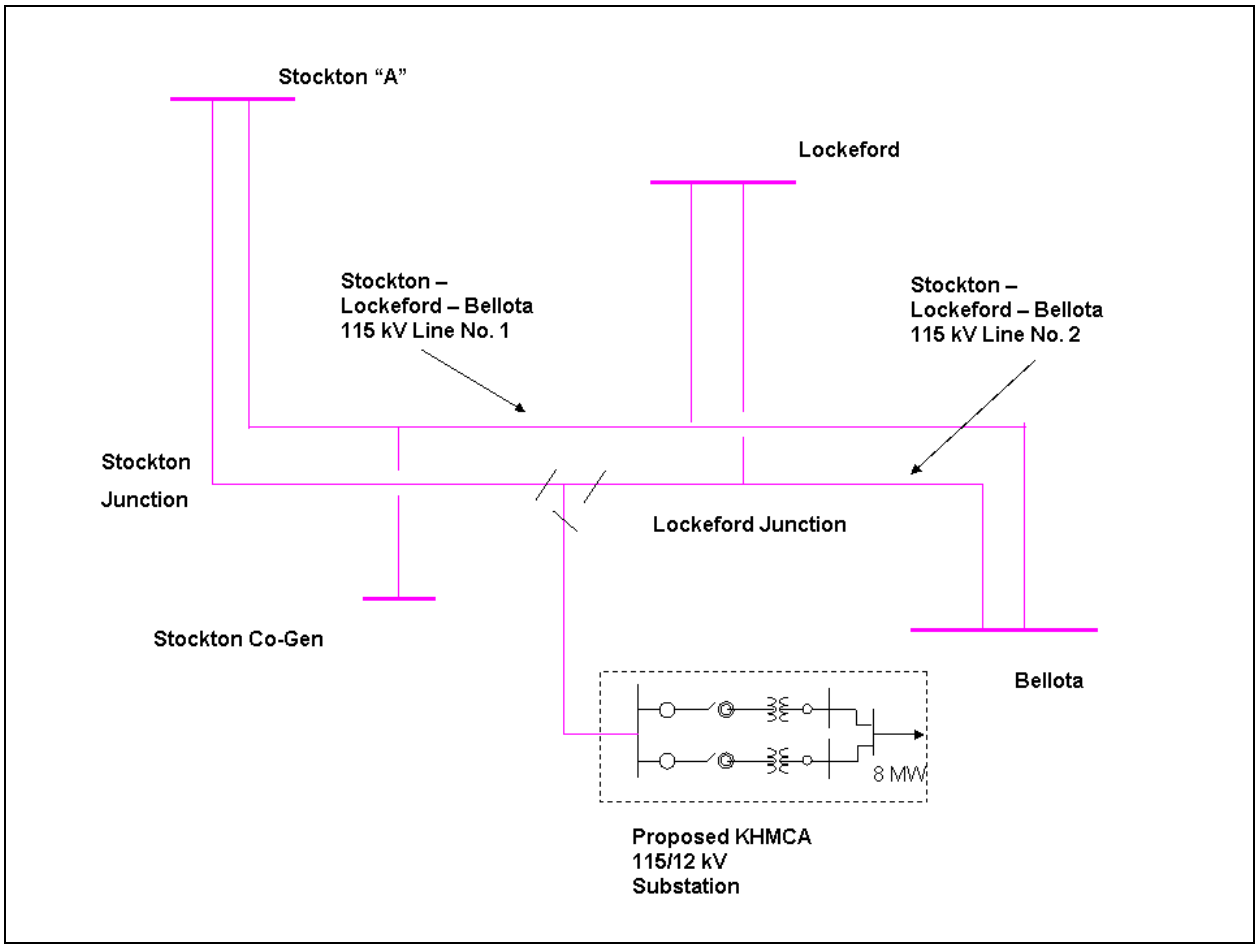

Figure 2-12: Scope Diagram

T772: Contra Costa – Las Positas 230 kV Line

(In Service Date – October 2009)

PROJECT INFORMATION

The project proposes to reconductor 24 miles of the Contra Costa-Las Positas 230 kV and 5.3 miles of the Contra Costa-Lone Tree 230 kV lines with a conductor having an emergency rating of at least 1,500 Amps.

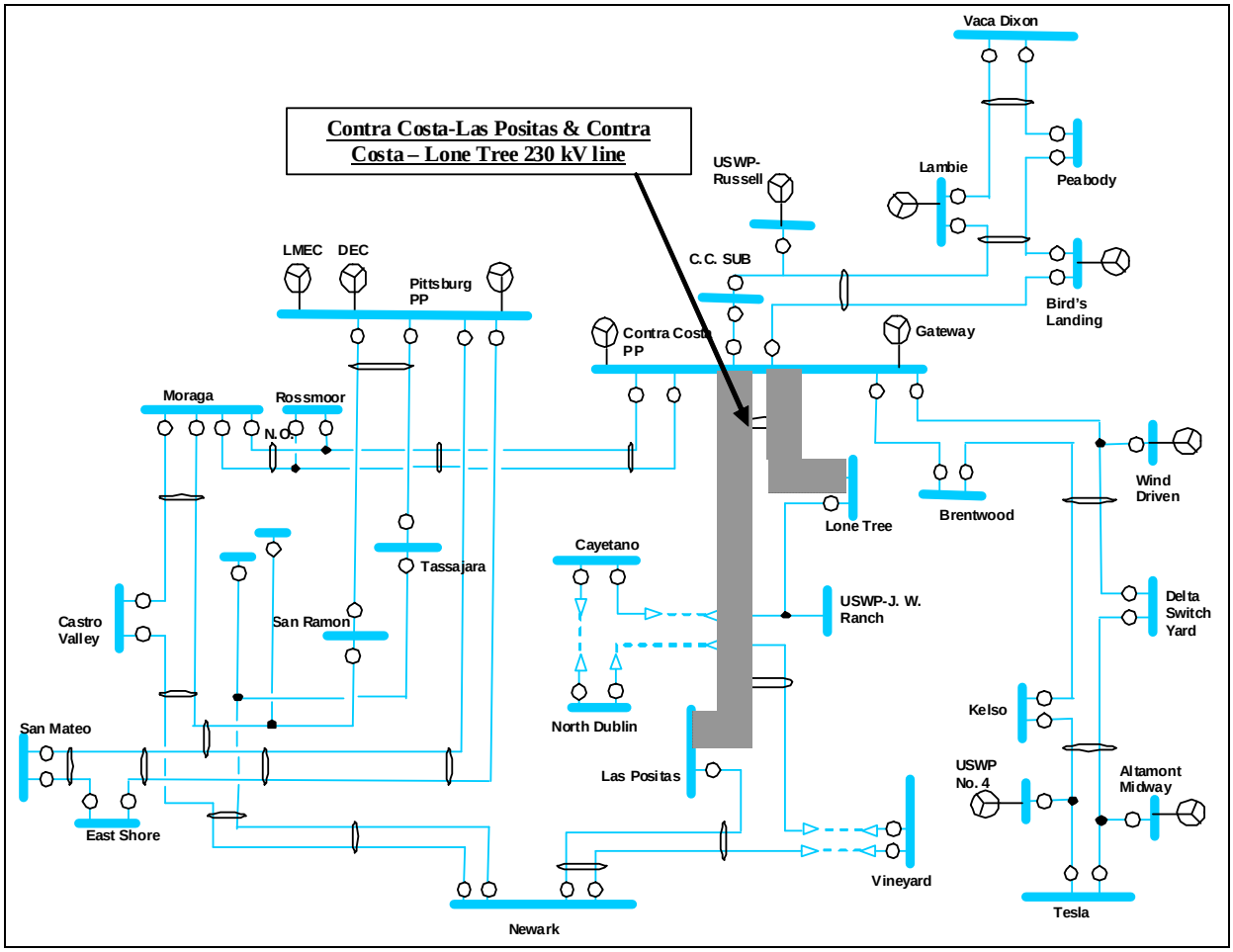

Figure 2-13: Scope Diagram

T972A: South of Birds Landing 230 kV Reconductoring

(In Service Date – December 2009)

PROJECT INFORMATION

This project proposes the following work, which was previously approved under the CAISO's LGIP process:

- Expand Birds Landing Switching Station to a four bay, breaker-and-a-half, configuration and loop the Lambie-Contra Costa Substation 230 kV Line into Birds Landing Switching Station.
- Disconnect Russell Substation from Lambie-Contra Costa Substation 230 kV Line and reconnect Russell Substation to Birds Landing Switching Station.
- Reconductor 7-miles of the Birds Landing-Contra Costa Substation, 8.6-miles of the Birds Landing-Contra Costa Power Plant and 2 miles of the Contra Costa Substation-Contra Costa Power Plant 230 kV lines with 1113 ACSS conductors.
- Modify protection and communication equipment at Birds Landing, Lambie, Contra Costa Power Plant and Contra Costa substations.

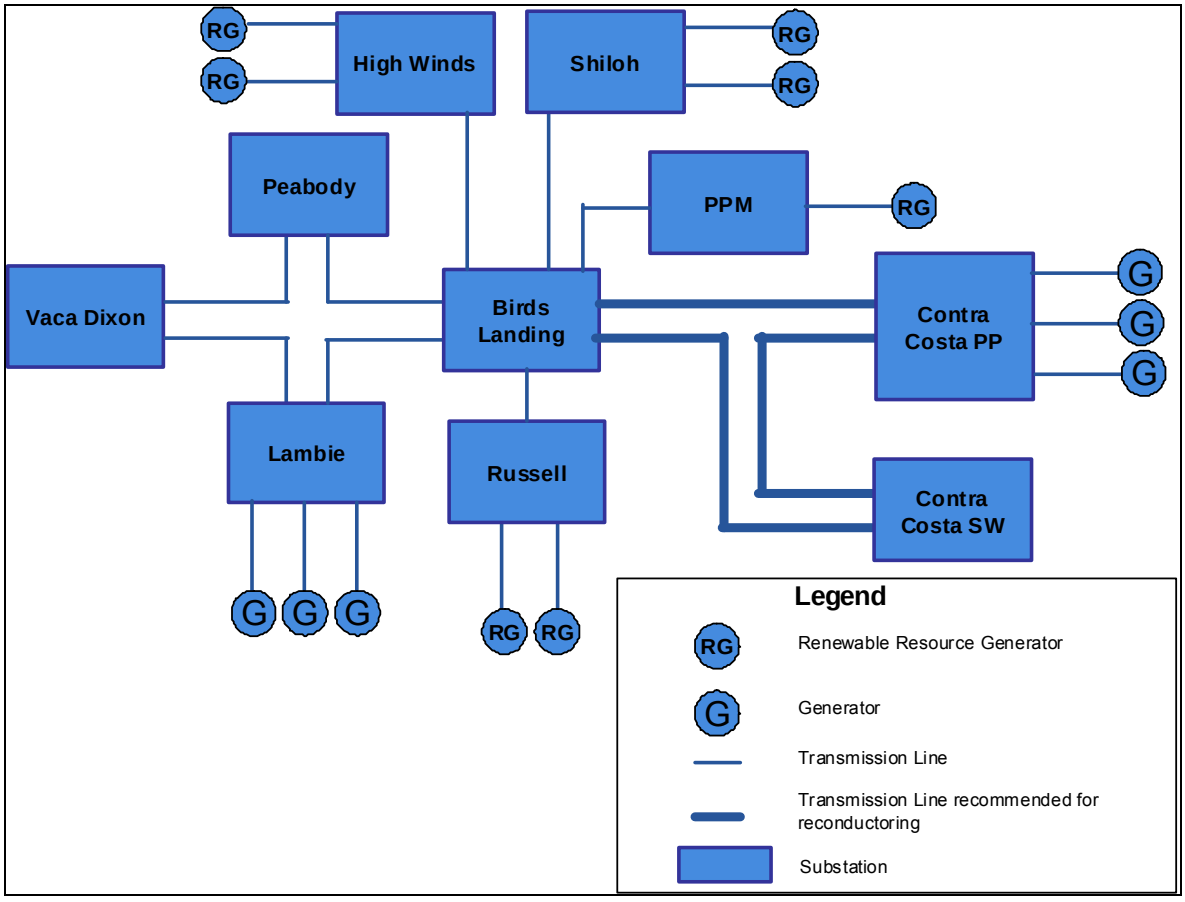

Figure 2-14: Scope Diagram

CHAPTER 3

Summary of Transmission Project Proposals

PG&E has seventy-nine projects that have received approval from the CAISO. This chapter provides a brief summary of each transmission project that has been approved by the CAISO.

Table of Contents

Summary of Transmission Project Proposals 2
T1055: Stone Substation Capacity Increase 5
T1131: Lakeville No. 2 60 kV Line Switch Upgrade 6
T686C: Palermo 115 kV Circuit Breaker and Switch Replacements 7
T958: Humboldt – Harris 60 kV Reconductoring 8
T964: Borden – Madera 70 kV Reinforcement 9
T1020: 7th Standard Substation Capacity Increase 10
T1066: Carbona Reliability 11
T945: Humboldt Reactive Support (SVC) 12
T965: Mesa 115 kV Shunt Capacitors 13
T983: Oakland Underground Cable 14
T970B: Moss Landing – Salinas – Soledad 115 kV Reconductoring 15
T258A: Gregg 230 kV Reactor 16
T1126: Daly City Bus Reconfiguration 17
T815: Pease – Marysville 60 kV Line 18
T1083: Burns Reliability 19
T1118: Salado – Newman 60 kV Line No. 2 Reconductor 20
T1088: Guernsey – Henrietta 70 kV Line Reconductor 21
T1133: Garberville Reactive Support 22
T1132: Maple Creek Reactive Support 23
T1042: Sanger – California Ave 70 kV to 115 kV Conversion 24
T1005: Sanger – Reedley 70 kV to 115 kV Conversion 25
T1037: Menlo Area 60 kV System Upgrade 26
T1037A: Menlo 60 kV Switch Upgrade 27
T444B: Gold Hill – Clarksville 115 kV Line Reconductoring 28
T759C: Atlantic – Lincoln Transmission 29
T249: Bay Meadows 115 kV Reconductoring 31
T993: Mendocino Coast Reactive Support 32
T967: Tesla 115 kV Capacity Increase 33
T979: Half Moon Bay Reactive Support 34
T686A : Palermo – Rio Oso 115 kV Line Reconductoring 35
T1138: Del Monte – Fort Ord 60 kV Reinforcement Project 36
T1120: Shepherd Substation Interconnection 37
T1091: Tri-Valley Voltage Control 38
T994: Lakeville – Ignacio #2 230 kV Line 39
T1173: Santa Cruz 115 kV Reinforcement 40
T1030: Table Mountain – Rio Oso 230 kV Reconductor and Tower Raises 41
T947: Hollister 115 kV Reconductoring 42
T962: East Nicolaus 115 kV Area Reinforcement 43
T972: Vaca Dixon – Birds Landing 230 kV Reconductoring 44
T1090: Midway – Renfro 115 kV Line Reconductor 45
T1058: San Justo Substation Interconnection 46
T1003: Herndon 230/115 kV Transformer 47
T444C: Missouri Flat – Gold Hill 115 kV Line 48

T1000: Wheeler Ridge 230/70 kV Transformer 49
T1033: Cooley Landing 115/60 kV Transformer Capacity Uprade 50
T990: Moraga Transformer Capacity Increase 51
T444D: Gold Hill - Horseshoe 115 kV Reinforcement..... 52
T1006: Valley Springs 230/60 kV Transformer Addition 53
T1072: Humboldt 115/60 kV Transformer Replacement..... 54
T880B: West Point – Valley Springs 60 kV Line 55
T854: Metcalf – Evergreen 115 kV 56
T985B: Rio Oso 230/115 kV Transformer Upgrades 57
T1177: Natividad Substation Installation..... 58
T1172: Watsonville 60 to 115 kV Voltage Conversion 59
T1040: Ravenswood – Cooley Landing 115 kV Reconductor..... 60
T1011: Cooley Landing – Los Altos 60 kV Reconductor..... 61
T346: Cortina 60 kV Reliability 62
T670A: Tesla – Newark 230 kV Path Upgrade 63
T1128: Caruthers – Kingsburg 70 kV Line Reconductor..... 64
T1127: Evergreen - Mabury 60 kV to 115 kV Conversion..... 65
T1049: Fulton - Fitch Mountain 60 kV Line Reconductor..... 66
T970A: Crazy Horse Switching Station..... 67
T991: Contra Costa – Moraga 230 kV Line Reconductoring 68
T984: Pittsburg – Tesla 230 kV Reconductoring 69
T197B: Ignacio – San Rafael and Ignacio – Las Gallinas 115 kV Reconductoring... 70
T603B: Vaca Dixon-Lakeville 230 kV Reconductoring..... 71
T982: Newark – Ravenswood 230 kV Line..... 72
T999: Pittsburg 230/115 kV Transformer Capacity Increase 73
T920A: South of San Mateo Capacity Increase..... 74
T1114: San Mateo – Bair 60 kV Line Reconductor..... 75
T692: Metcalf – Piercy & Swift – Metcalf and Newark – Dixon Landing 115 kV Upgrade..... 76
T1117: Glenn No.1 60 kV Line Reconductor 77
T678C: Lodi – Industrial 60 kV Line Switch Upgrade..... 78
T1092: Herndon 115 kV Circuit Break Replacement 79
T1092: Occidental of Elk Hills 230 kV Interconnection 80
T986: Woodward 115 kV Reinforcement..... 81
T1134: Clearlake 60 kV System Reinforcement 82
T996A: Soledad Transformer Increase Project..... 83
T992: San Leandro – Oakland "J" 115 kV Line Reconductoring..... 84

T1055: Stone Substation Capacity Increase

(Expected In Service Date – April 2010)

PROJECT INFORMATION

This project scope is to reconfigure the 115 kV connections into Stone Substation by creating a flip-flop configuration, which can be converted into a loop configuration in the future. This project will also involve installation of new 115 kV circuit breakers at Stone Substation.

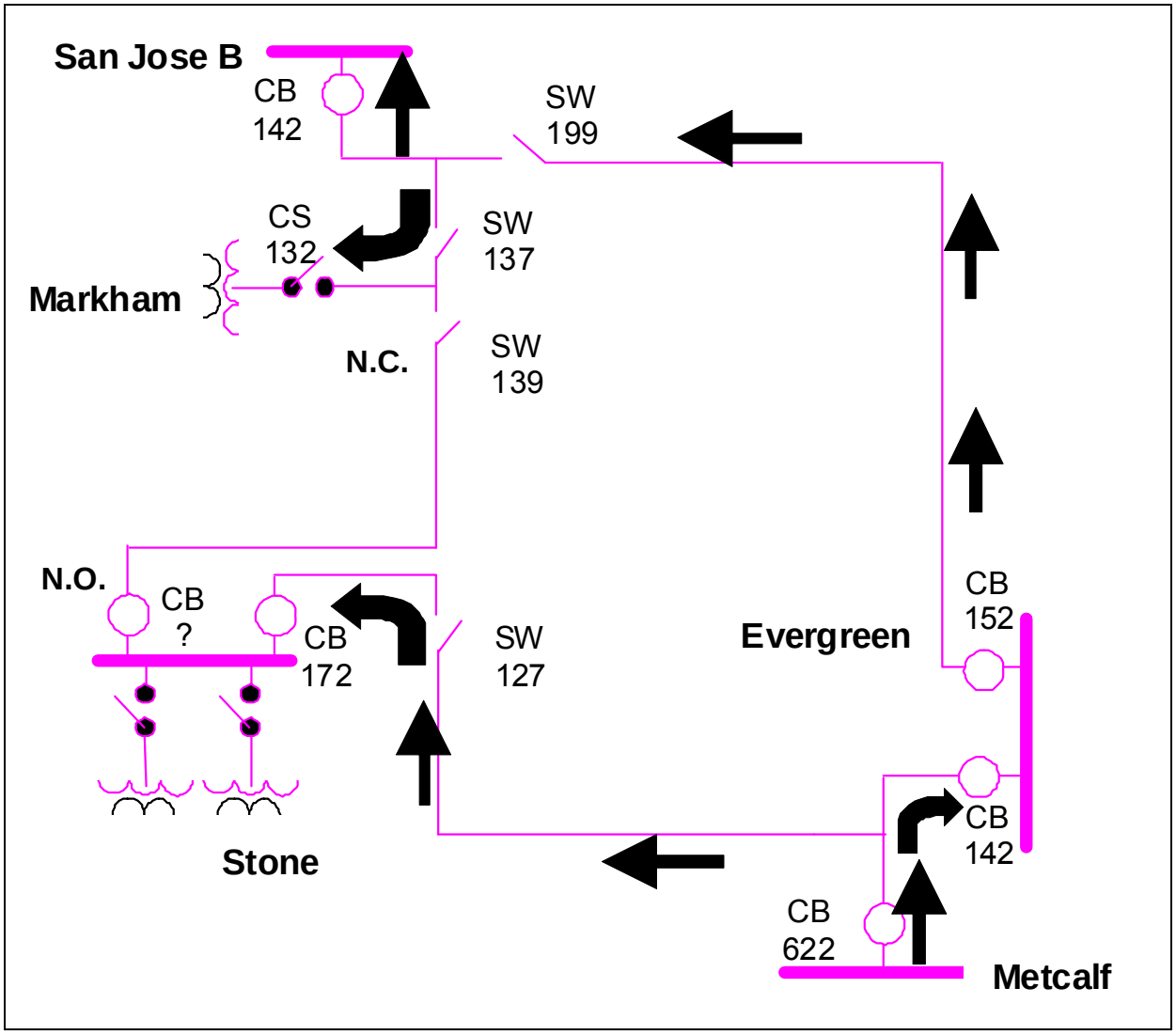

Figure 3-1: Scope Diagram

T1131: Lakeville No. 2 60 kV Line Switch Upgrade

(Expected In Service Date May 2010)

The project scope is to replace the existing, 400 Amp rated, 60 kV line switch No. 57 on the Lakeville No. 2 60 kV Line. This new switch will be sized to handle a minimum rating of 600 Amps continuous current.

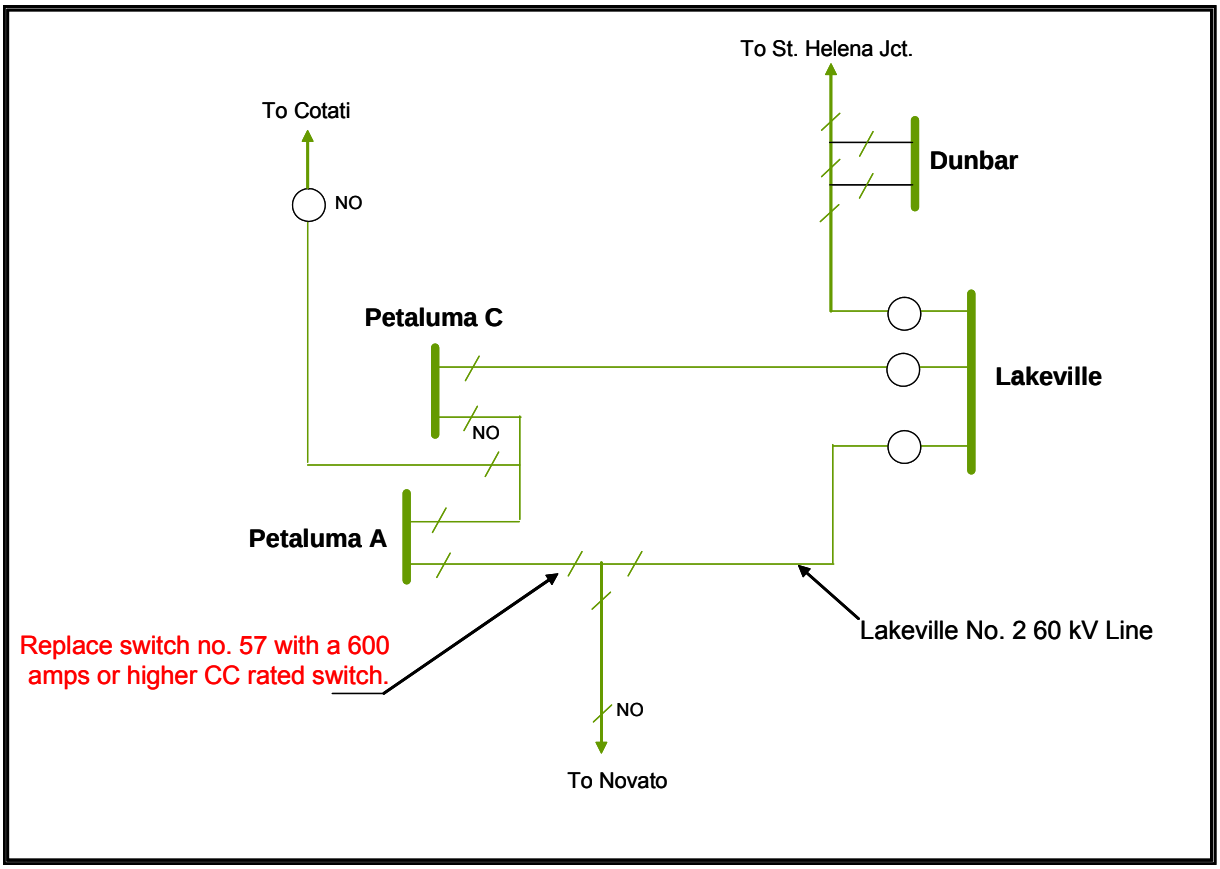

Figure 3-2: Scope Diagram

T686C: Palermo 115 kV Circuit Breaker and Switch Replacements

(Expected In Service Date May 2010)

The proposed project scope is to replace the Palermo 230/115 kV Transformer No. 2 circuit breaker (Palermo CB 182) and its associated switches with equipment rated to handle a minimum of 2,000 Amps.

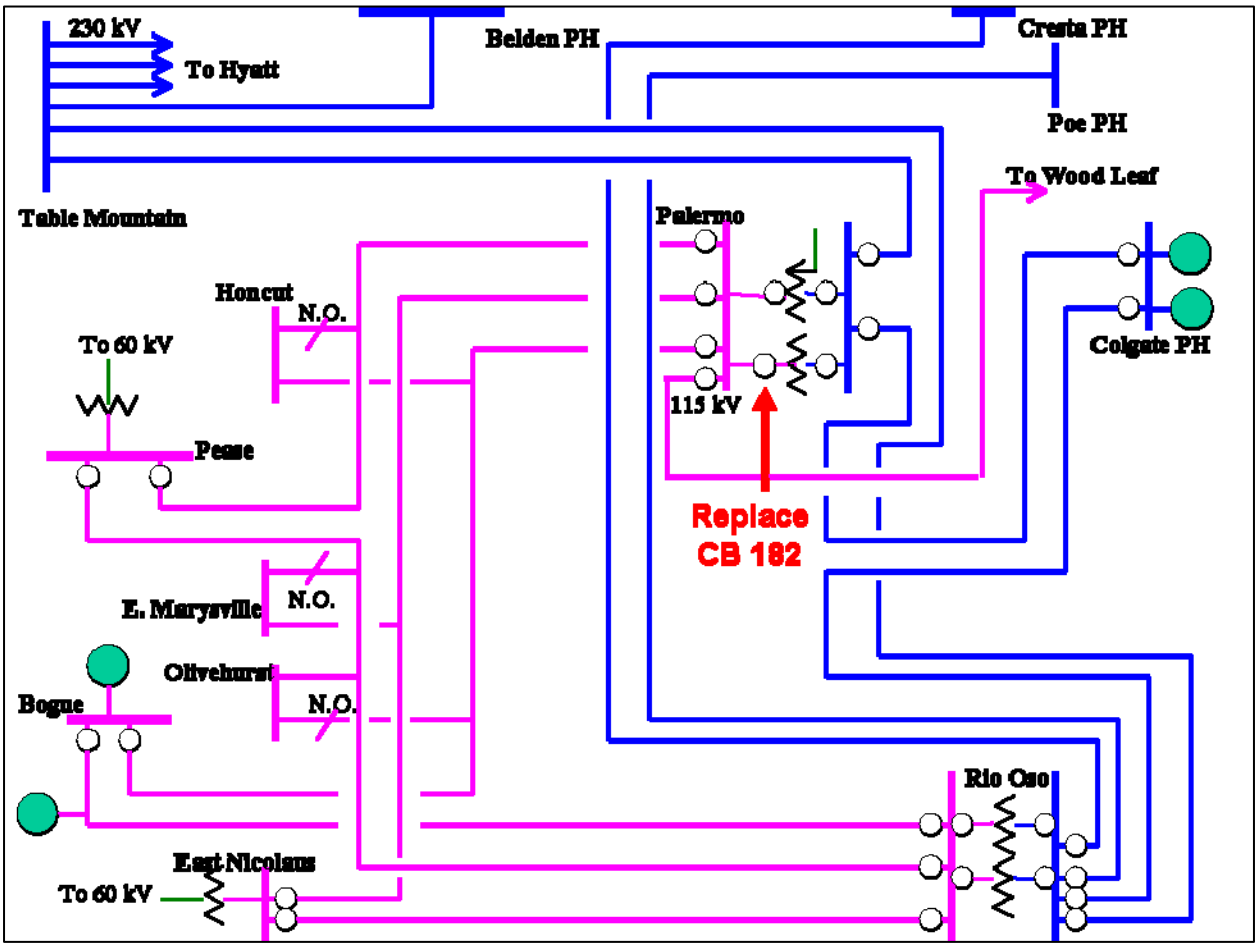

Figure 3-3: Scope Diagram

T958: Humboldt – Harris 60 kV Reconductoring

(Expected In Service Date – May 2010)

PROJECT INFORMATION

This project proposes to reconductor a 1-mile section between Humboldt and Harris substations with a conductor rated at 650 Amps or higher and to install SCADA on Switch Nos. 37 and 39 at Harris Substation.

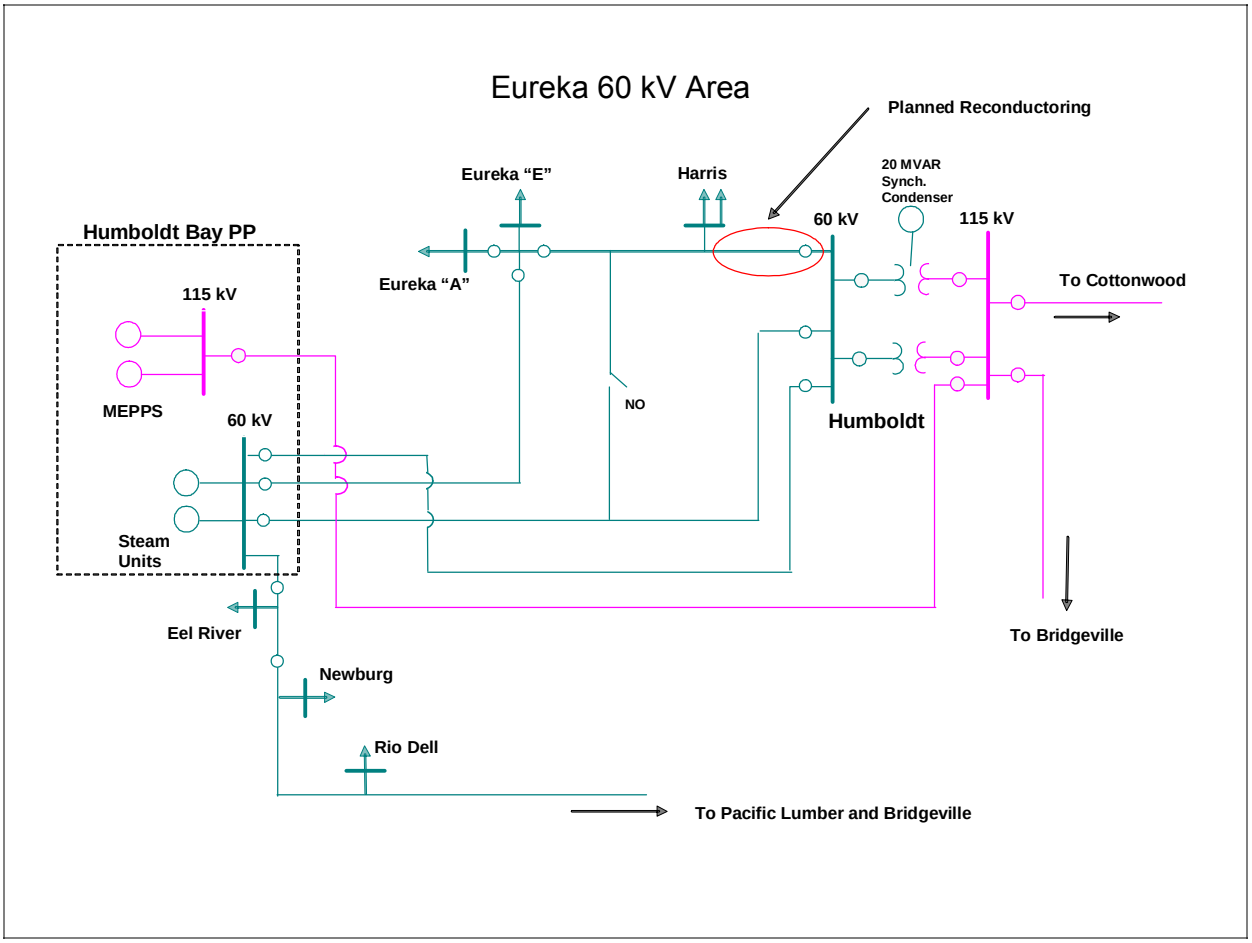

Figure 3-4: Scope Diagram

T964: Borden – Madera 70 kV Reinforcement

(Expected In Service Date – May 2010)

PROJECT INFORMATION

This project proposes to build a new 70 kV line from Borden Substation to Madera Substation with 715.5 kcmil AAC or equivalent, add a new 70 kV breaker at Borden Substation, re-conductor 10 miles with 715.5 kcmil AAC or equivalent, and re-configure lines to form new Borden-Glass and Glass-Biola-Madera 70 kV lines.

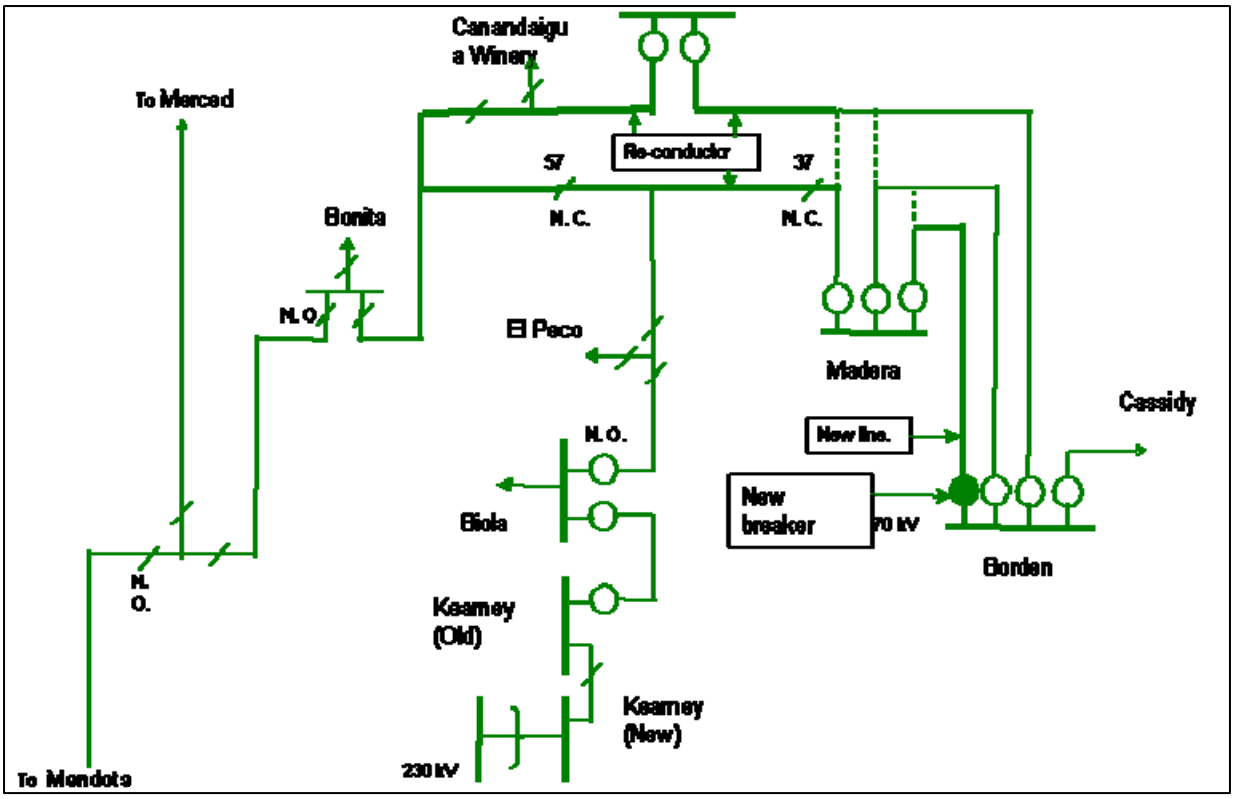

Figure 3-5: Scope Diagram

T1020: 7th Standard Substation Capacity Increase

(Expected In Service Date – May 2010)

PROJECT INFORMATION

The project scope is to loop the proposed 7th Standard Substation off the Kern-Lerdo-Kern Oil 115 kV Line. Looping the 7th Standard Substation would require building a new 115 kV double circuit tower line (3.5 miles long) from 7th Standard Substation to the Kern-Lerdo-Kern Oil 115 kV Line. The new double circuit tower line will be sized with 1113 Al conductors.

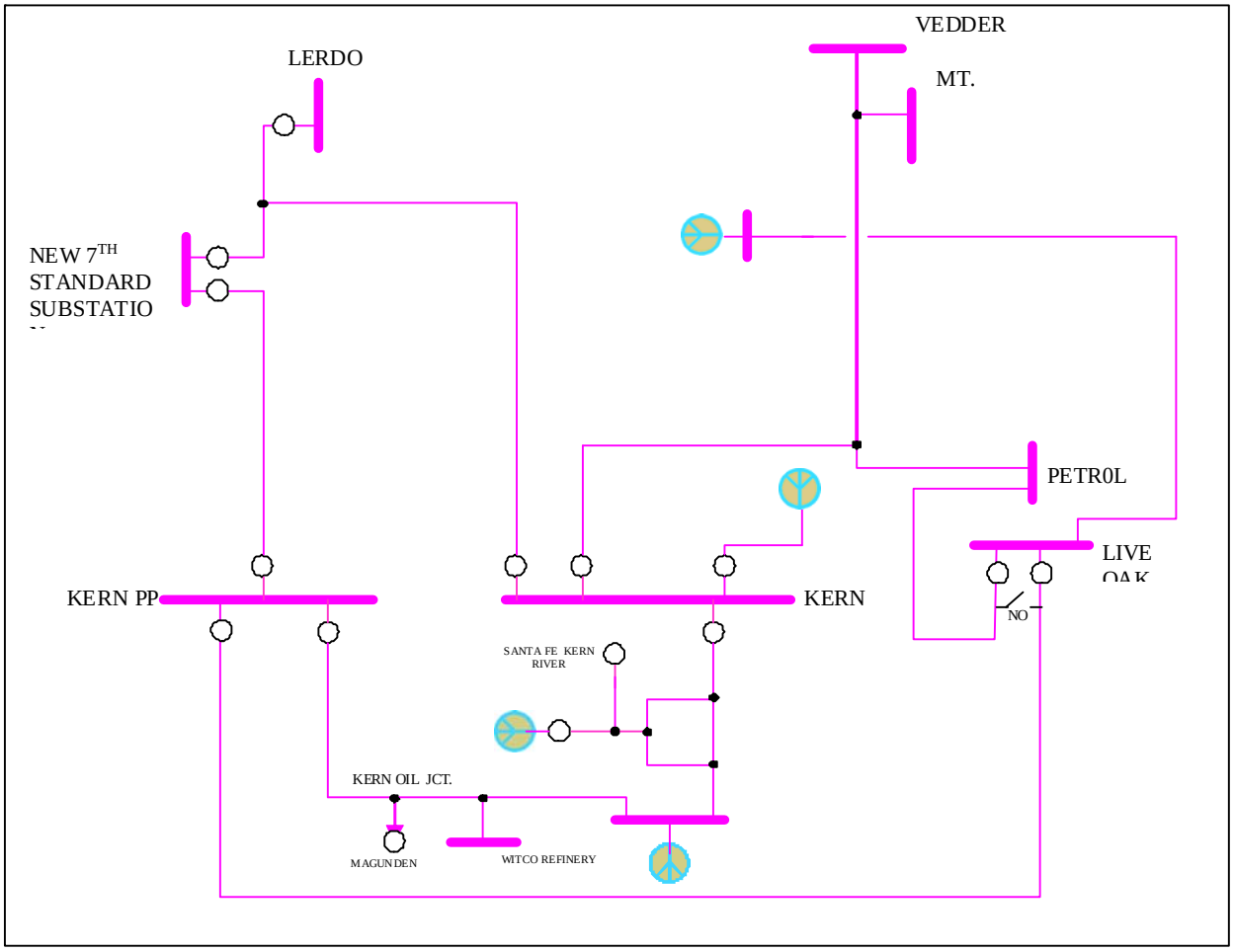

Figure 3-6: Scope Diagram

T1066: Carbona Reliability

(Expected In Service Date –May 2010)

PROJECT INFORMATION

The project scope is to:

- Install new 1,200 Amp 60 kV circuit breaker at Kasson Substation
- Reconfigure Carbona No. 1 60 kV Tap Line (300 feet new line section) to terminate at the new circuit breaker at Kasson Substation.
- Install two SCADA controlled transmission line switches on Carbona No. 1 and 2 60 kV Tap Lines by upgrading Carbona Switch Nos. 37 and 39
- Rerate the remaining portion (4.4 miles of #2/0 CU conductors) of the Carbona No. 1 60 kV Tap Line to 4 feet per second wind speed ratings of 336 Amps normal and 386 Amps emergency.

In addition, the following maintenance work will be completed along with the above project scope:

- Reconductor the Carbona No. 1 60 kV Tap Line from Pole # 11/85 to Carbona Substation (2.8 circuit miles of annealed #4 CU and 397.5 AAL conductors) with a higher capacity conductor (603 Amps or greater)

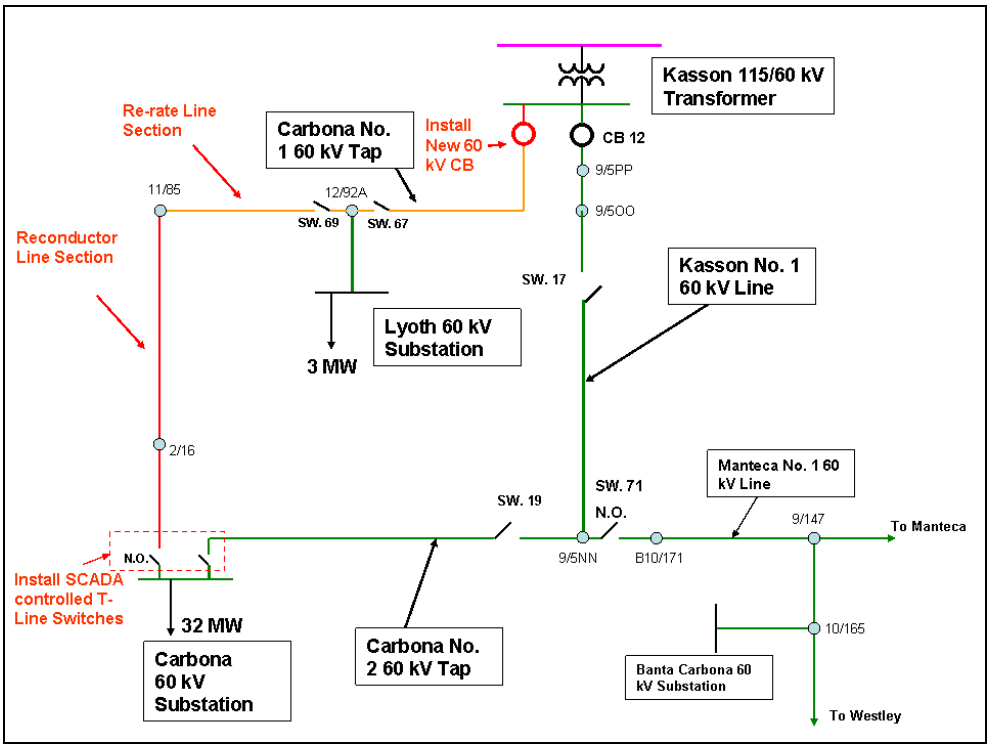

Figure 3-7: Scope Diagram

T945: Humboldt Reactive Support (SVC)

(Expected In Service Date – June 2010)

PROJECT INFORMATION

This project will replace the existing synchronous condenser at Humboldt Substation with a new Static VAr Compensator device (SVC) that is capable of producing -25/+50 megavolt amperes – reactive (MVArs).

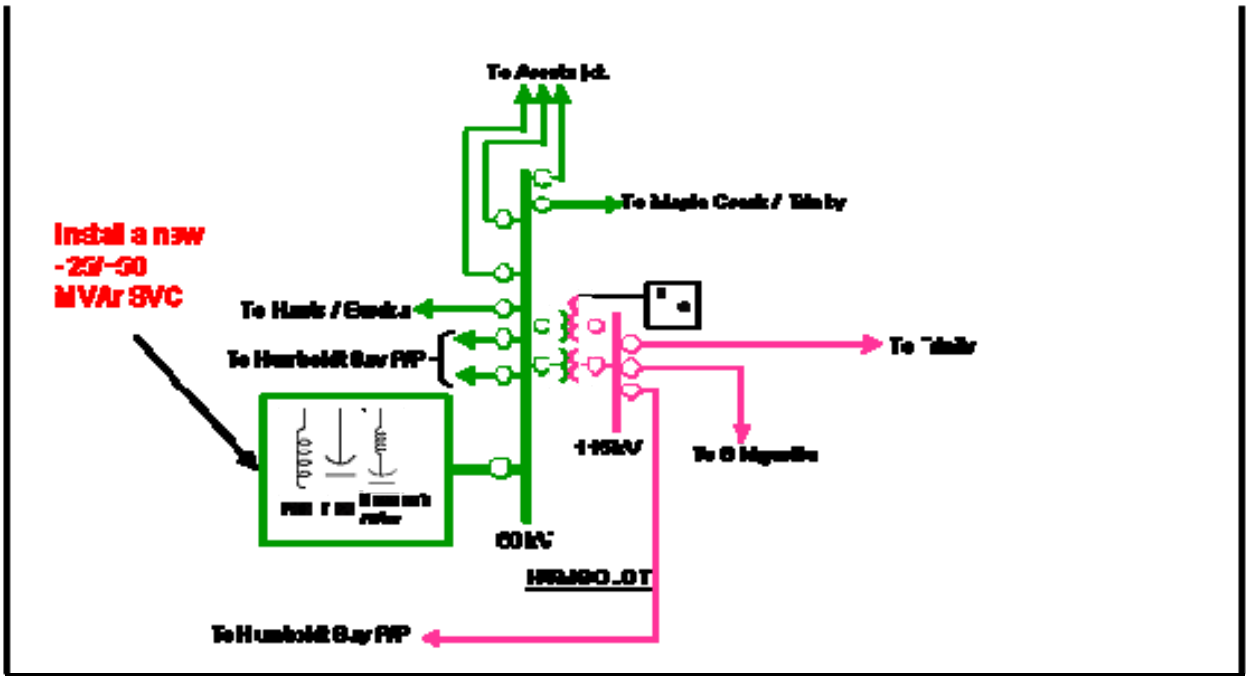

Figure 3-8: Scope Diagram

T965: Mesa 115 kV Shunt Capacitors

(Expected In Service Date – July 2010)

PROJECT INFORMATION

The project scope is to install an additional 2-25 MVArs of 115 kV shunt capacitors at Mesa Substation.

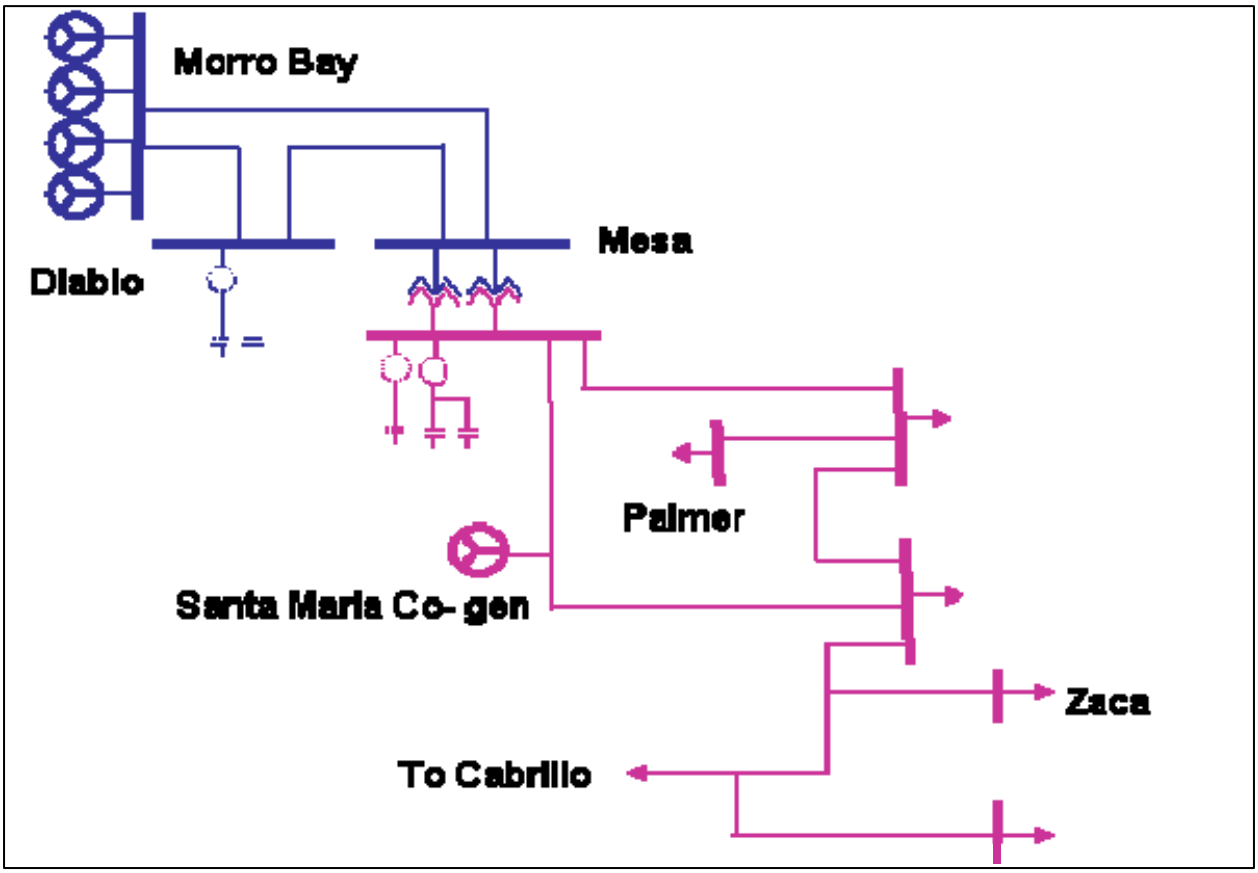

Figure 3-9: Scope Diagram

T983: Oakland Underground Cable

(Expected In Service Date – August 2010)

PROJECT INFORMATION

The project scope is to construct an additional Oakland C – X 115 kV underground cable (approximately 3.4 miles).

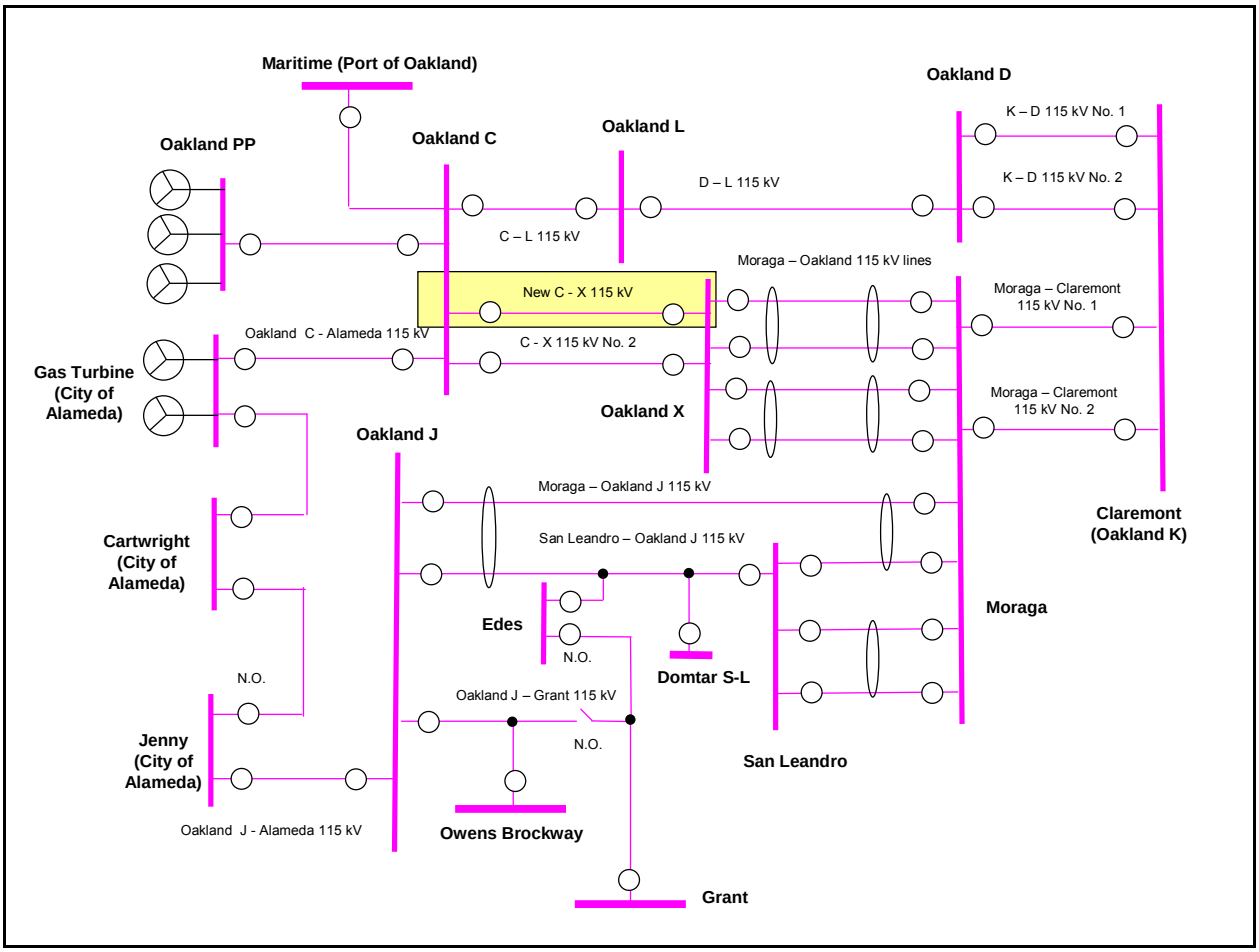

Figure 3-10: Scope Diagram

T970B: Moss Landing – Salinas – Soledad 115 kV Reconductoring

(Expected In Service Date – October 2010)

PROJECT INFORMATION

This project proposes to reconductor a 10.4-mile section of the Moss Landing-Salinas-Soledad Nos. 1 and 2 115 kV lines from Moss Landing to the Lagunitas Switches. Specifically, this project will: 1) Reconductor the line sections with 477 steel-supported aluminum conductor (SSAC) on both transmission lines, and 2) Replace 115 kV switches 413 and 415 and associated conductors at Moss Landing.

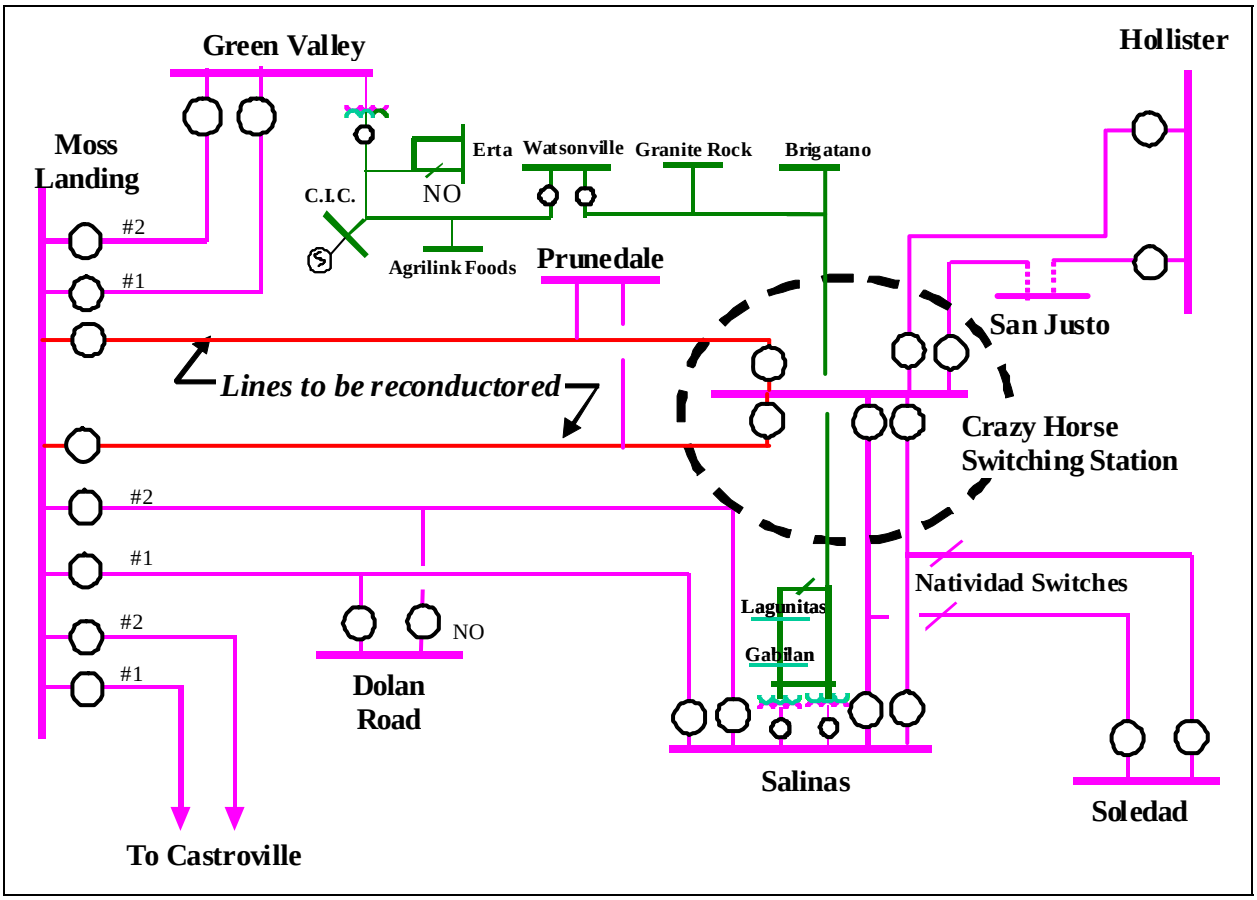

Figure 3-11: Scope Diagram

T258A: Gregg 230 kV Reactor

(Expected In Service Date – December 2010)

PROJECT INFORMATION

The project scope is to install 100 MVArs of 230 kV shunt reactors at Gregg Substation.

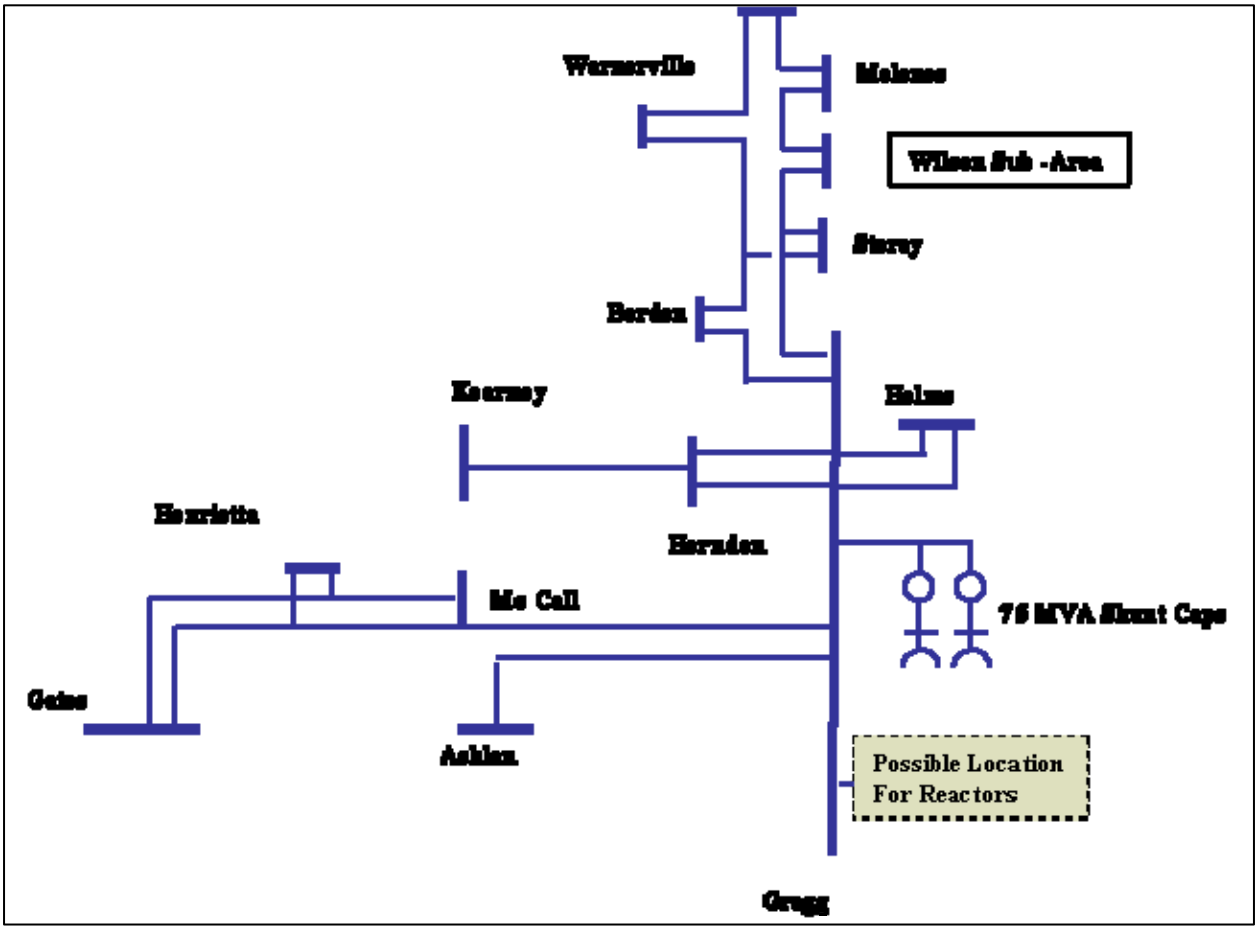

Figure 3-12: Scope Diagram

T1126: Daly City Bus Reconfiguration

(Expected In Service Date December 2010)

PROJECT INFORMATION

This project proposes to install two new 115 kV line circuit breakers with SCADA and a new low profile 115 kV bus at Daly City Substation by December 2010. This project also proposes to install two new 115 kV bus sectionalizing breakers with SCADA and disconnect switches.

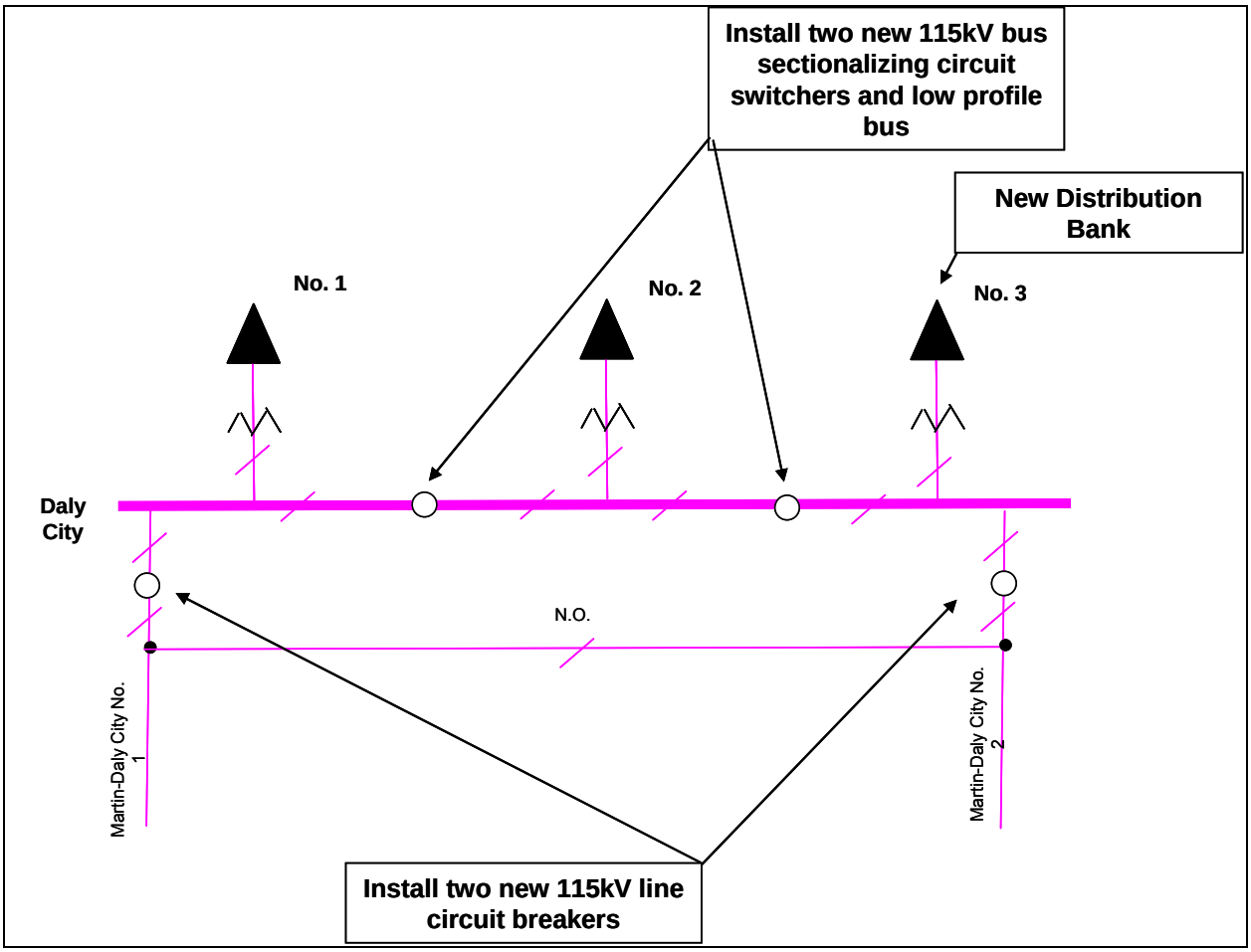

Figure 3-13: Scope Diagram

T815: Pease – Marysville 60 kV Line

(Expected In Service Date – December 2010)

PROJECT INFORMATION

This project proposes to utilize an existing right-of-way to construct a new 60 kV line (8 miles) between Pease and Marysville substations.

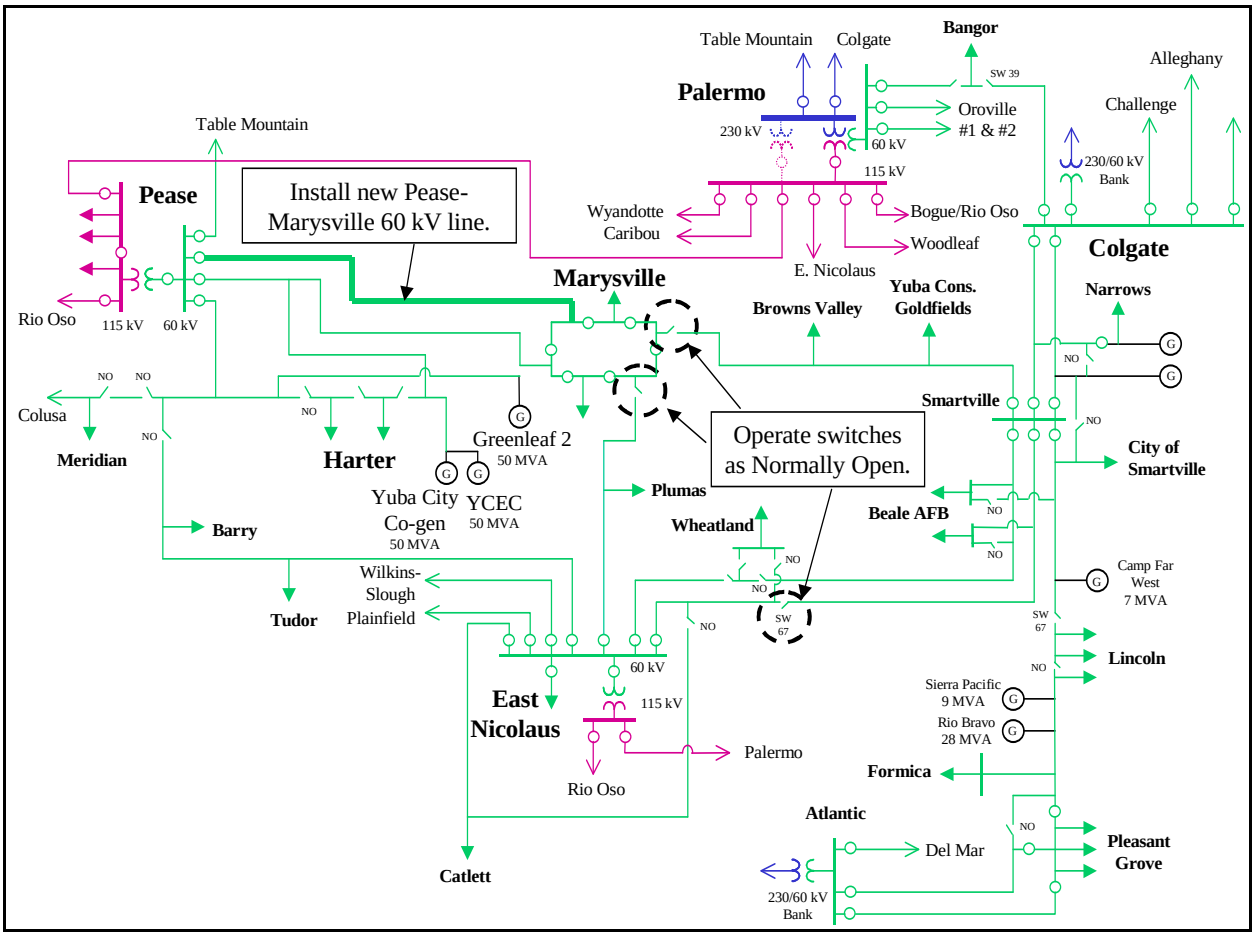

Figure 3-14: Scope Diagram

T1083: Burns Reliability

(Expected In Service Date –December 2010)

PROJECT INFORMATION

This project scope is to install a 60 kV circuit breaker at Burns Substation on the 60 kV line up to Monta Vista. The Burns 60 kV bus will be reconfigured to accommodate the new breaker, and SCADA will be installed at Burns. The project will also install SCADA-operated switches at Big Basin Substation and at Lone Star Junction.

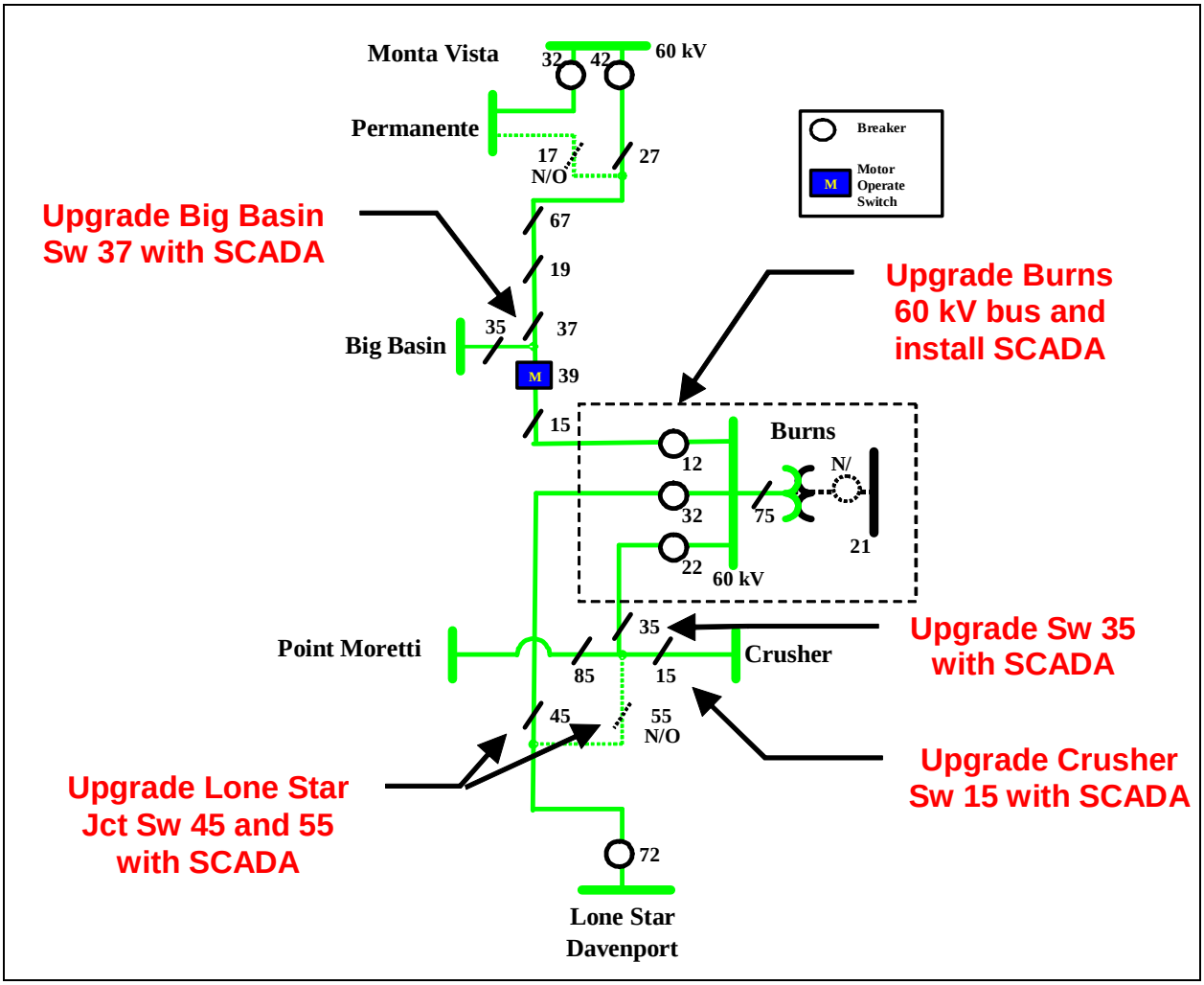

Figure 3-15: Scope Diagram

T1118: Salado – Newman 60 kV Line No. 2 Reconductor

(Expected In Service Date – December 2010)

PROJECT INFORMATION

The project scope is to reconductor 6 spans of 266.8 AAL and #1/0 CU conductors on the Salado-Newman 60 kV No. 2 Line.

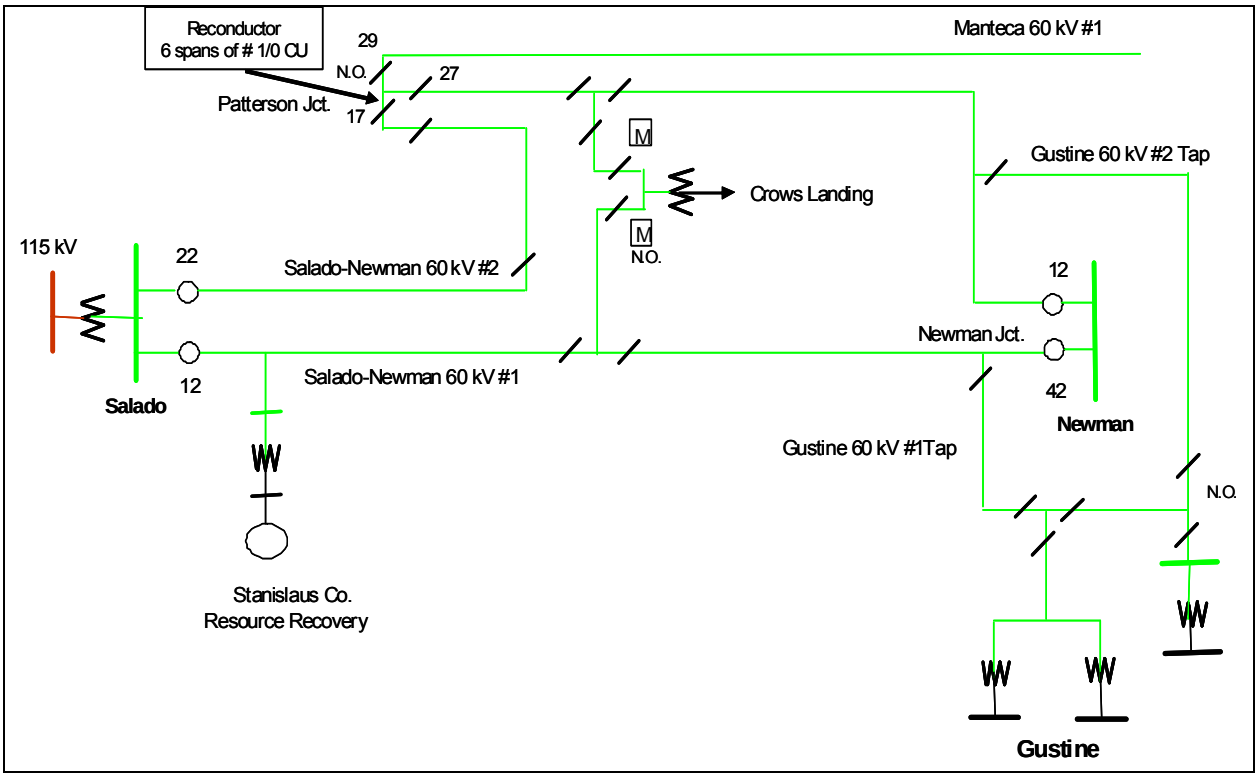

Figure 3-16: Scope Diagram

T1088: Guernsey – Henrietta 70 kV Line Reconductor

(Expected In Service Date April 2011)

PROJECT INFORMATION

The project scope is to reconductor a three mile limiting section of the Guernsey-Henrietta 70 kV Line with a conductor capable of carrying a minimum capacity of 900 Amps under summer emergency conditions. Associated line terminal equipment will be upgraded, if necessary. The scope also includes obtaining any necessary environmental and land permits.

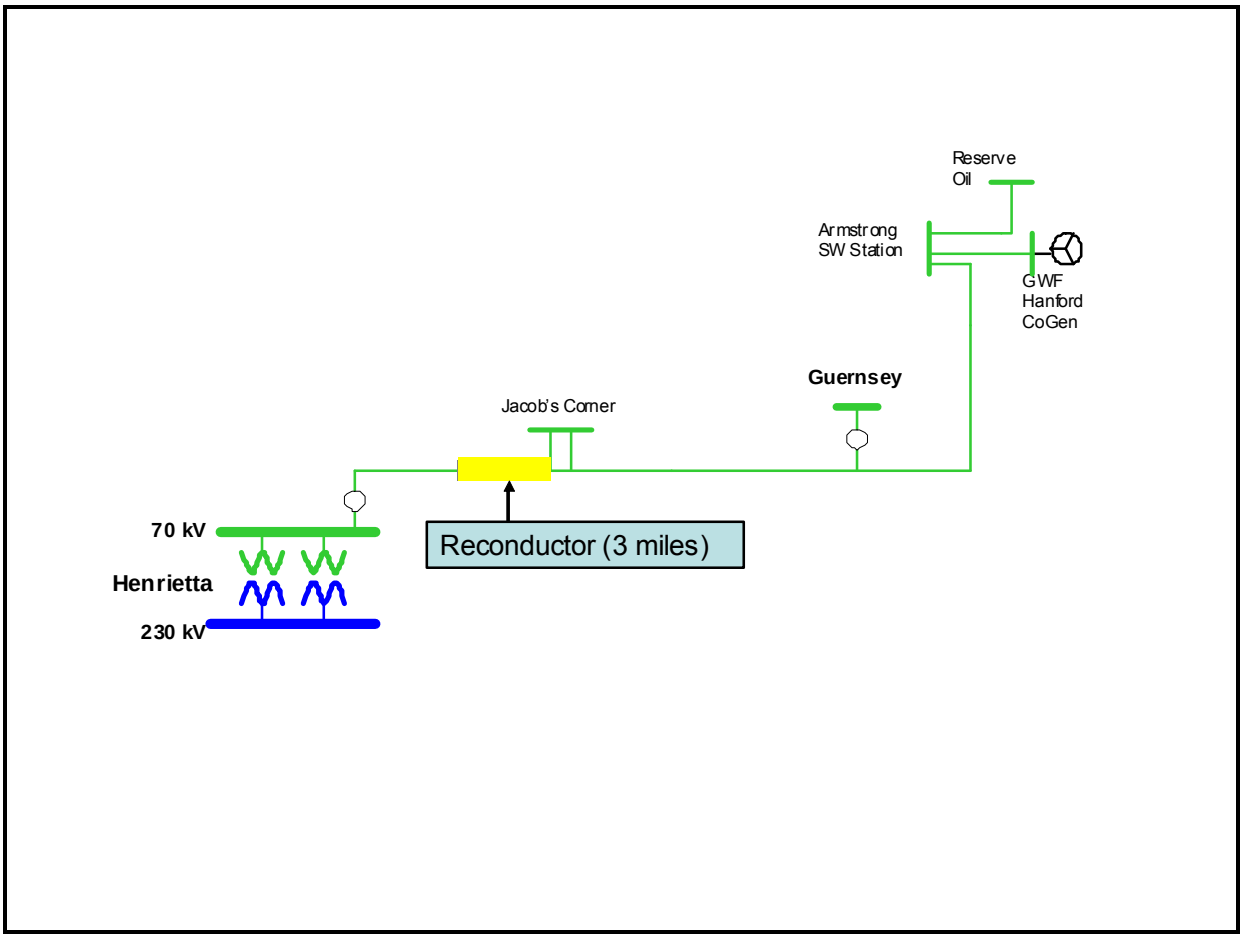

Figure 3-17: Scope Diagram

T1133: Garberville Reactive Support

(Expected In Service Date May 2011)

PROJECT INFORMATION

The project scope is to install a 20 MVAr reactive support device at Garberville Substation.

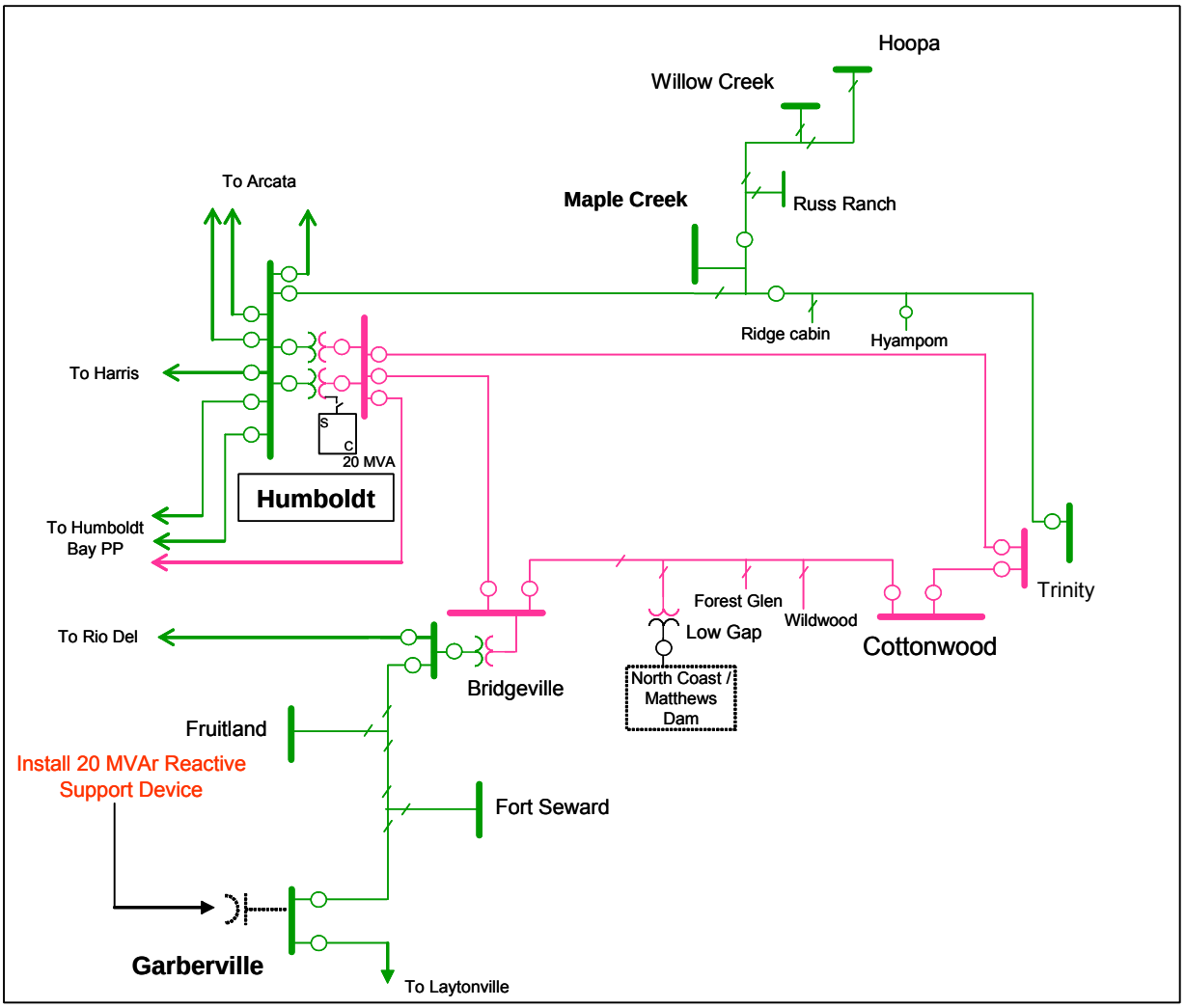

Figure 3-18: Scope Diagram

T1132: Maple Creek Reactive Support

(Expected In Service Date May 2011)

PROJECT INFORMATION

The project scope is to install a 10 MVAr reactive support device at Maple Creek Substation.

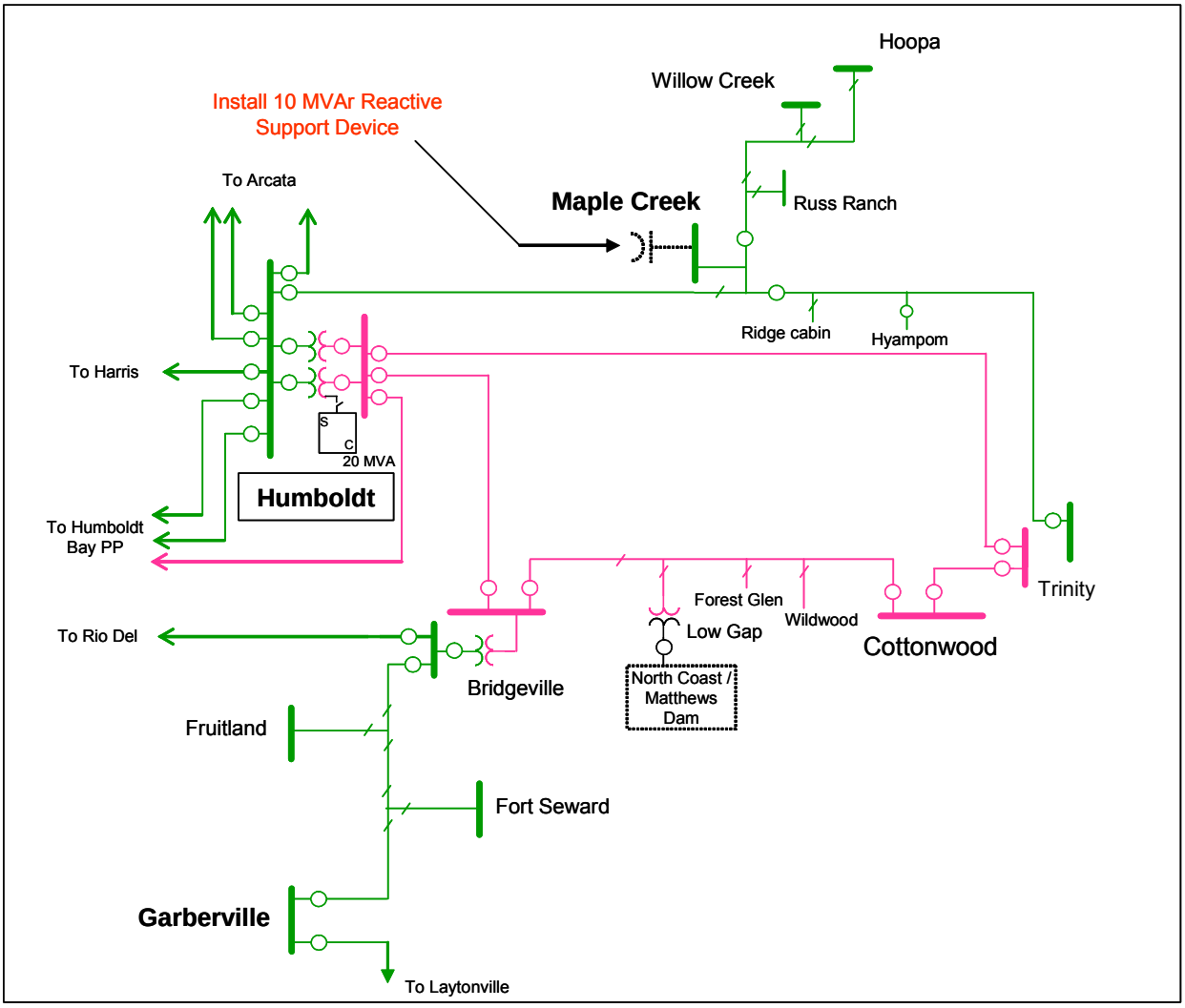

Figure 3-19: Scope Diagram

T1042: Sanger – California Ave 70 kV to 115 kV Conversion

(Expected In Service Date – May 2011)

PROJECT INFORMATION

The project scope is to convert the Sanger-California Ave 70 kV Line No. 2 for 115 kV operation and reconductor with a conductor capable of carrying a minimum of 900 Amps under emergency conditions. Associated substation terminal equipment will be added at California Ave and Sanger substations to accommodate this conversion. The project scope also includes obtaining any necessary land and environmental permits.

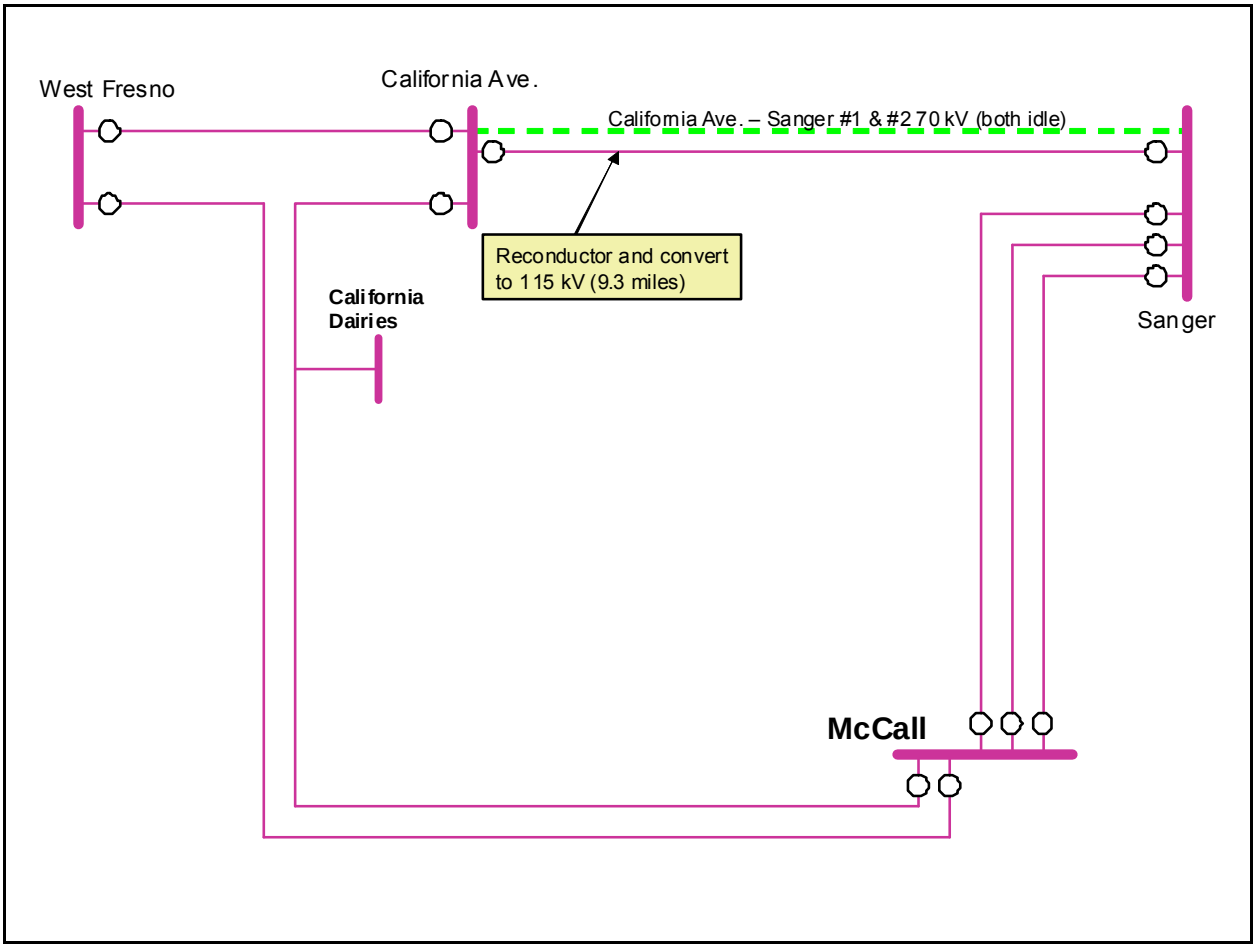

Figure 3-20: Scope Diagram

T1005: Sanger – Reedley 70 kV to 115 kV Conversion

(Expected In Service Date May 2011)

PROJECT INFORMATION

The project scope is to convert the Sanger-Reedley 70 kV Line for 115 kV operation and reconductor with a conductor capable of carrying a minimum of 900 Amps under emergency conditions. In addition, Parlier Substation will be converted to 115 kV operation and the 115 kV bus at Reedley Substation will be upgraded to a breaker-and-a-half configuration. Sanger Cogen will be installing a 115 kV transformer and upgrading protection and metering equipment for 115 kV operation. All 70 kV equipment will be removed from Sanger Substation.

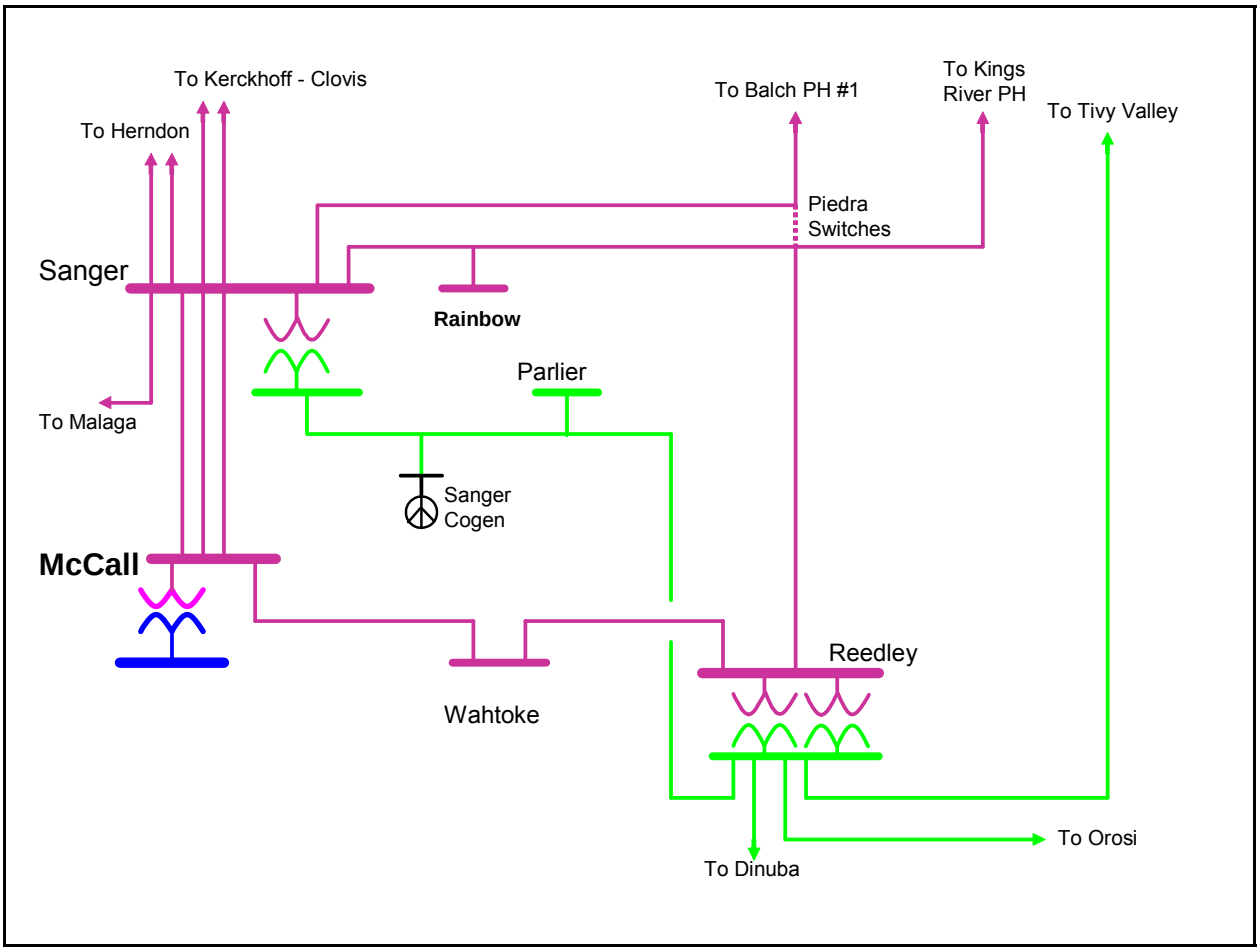

Figure 3-21: Scope Diagram

T1037: Menlo Area 60 kV System Upgrade

(Expected In Service Date May 2011)

PROJECT INFORMATION

This project proposes to replace fifteen 600 Amp rated switches with 1,200 Amp rated switches and to upgrade the limiting components on the Jefferson-Stanford and Cooley Landing-Stanford 60 kV lines. The 60 kV buses at Glenwood and Menlo substations would be reconductored with bundled 1113 AAC conductor, and two breakers would be installed at Menlo Substation to improve transmission reliability. This project also proposes to reconductor the Glenwood-Menlo 60 kV line section with a conductor rated at 1100 Amps or greater (approximately 2 miles long).

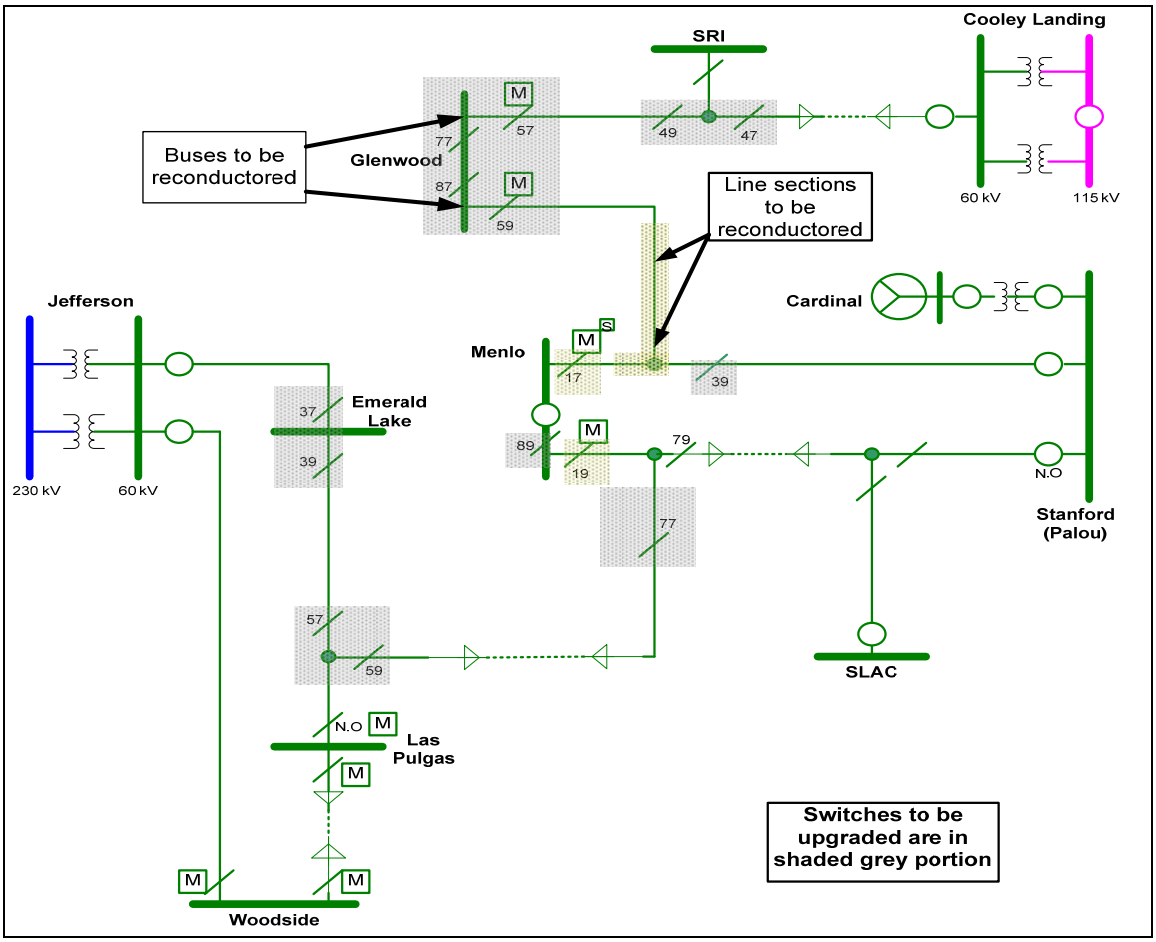

Figure 3-22: Scope Diagram

T1037A: Menlo 60 kV Switch Upgrade

(Expected In Service Date –May 2011)

PROJECT INFORMATION

The project scope is to replace all 60 kV switches that have a rating of less then 800 Amps in Menlo 60 kV Substation with switches that have a capability of 800 Amps or greater.

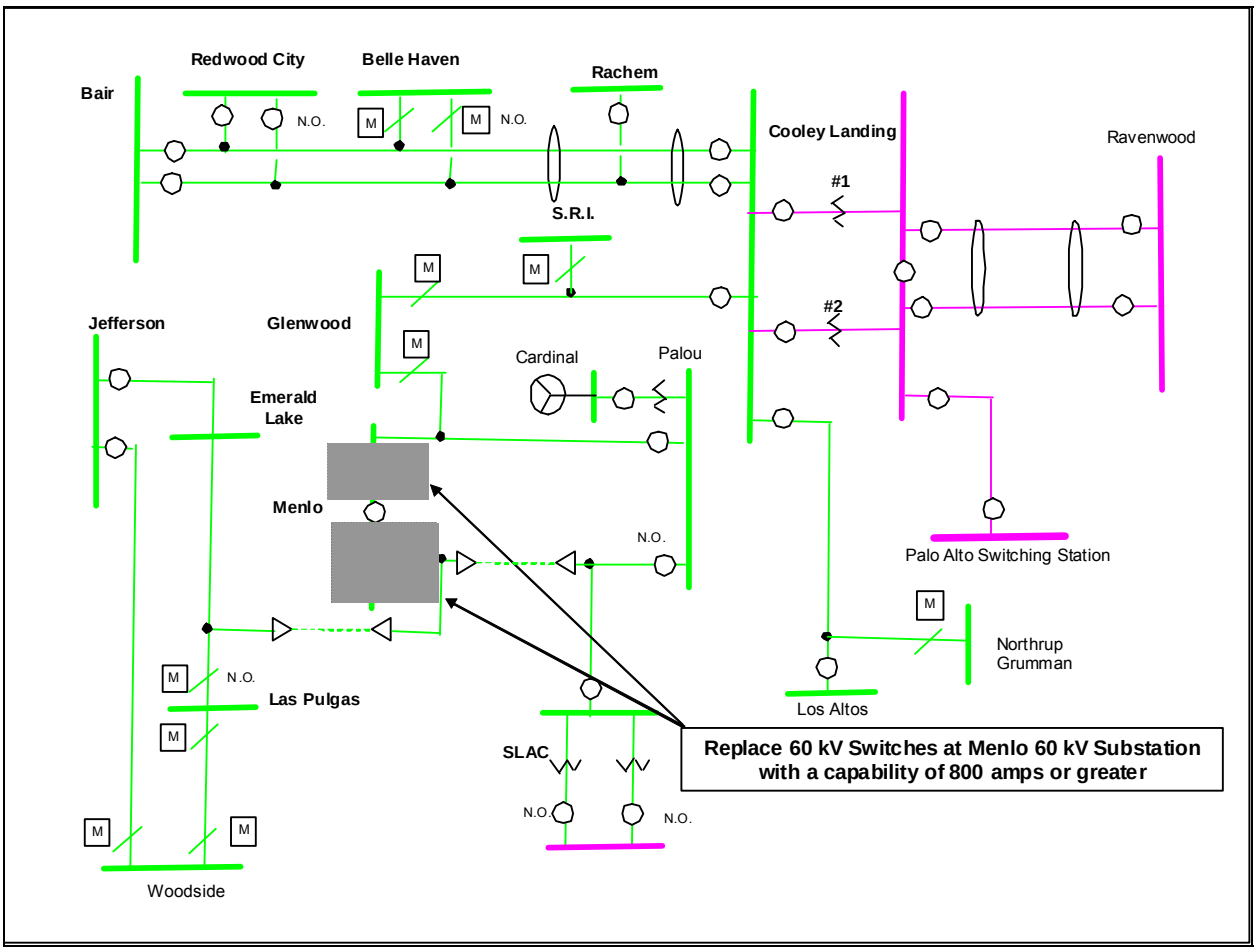

Figure 3-23: Scope Diagram

T444B: Gold Hill – Clarksville 115 kV Line Reconductoring

(Expected In Service Date – May 2011)

PROJECT INFORMATION

This project proposes to reconductor the Gold Hill – Clarksville 115 kV Line with 477 SSAC conductors.

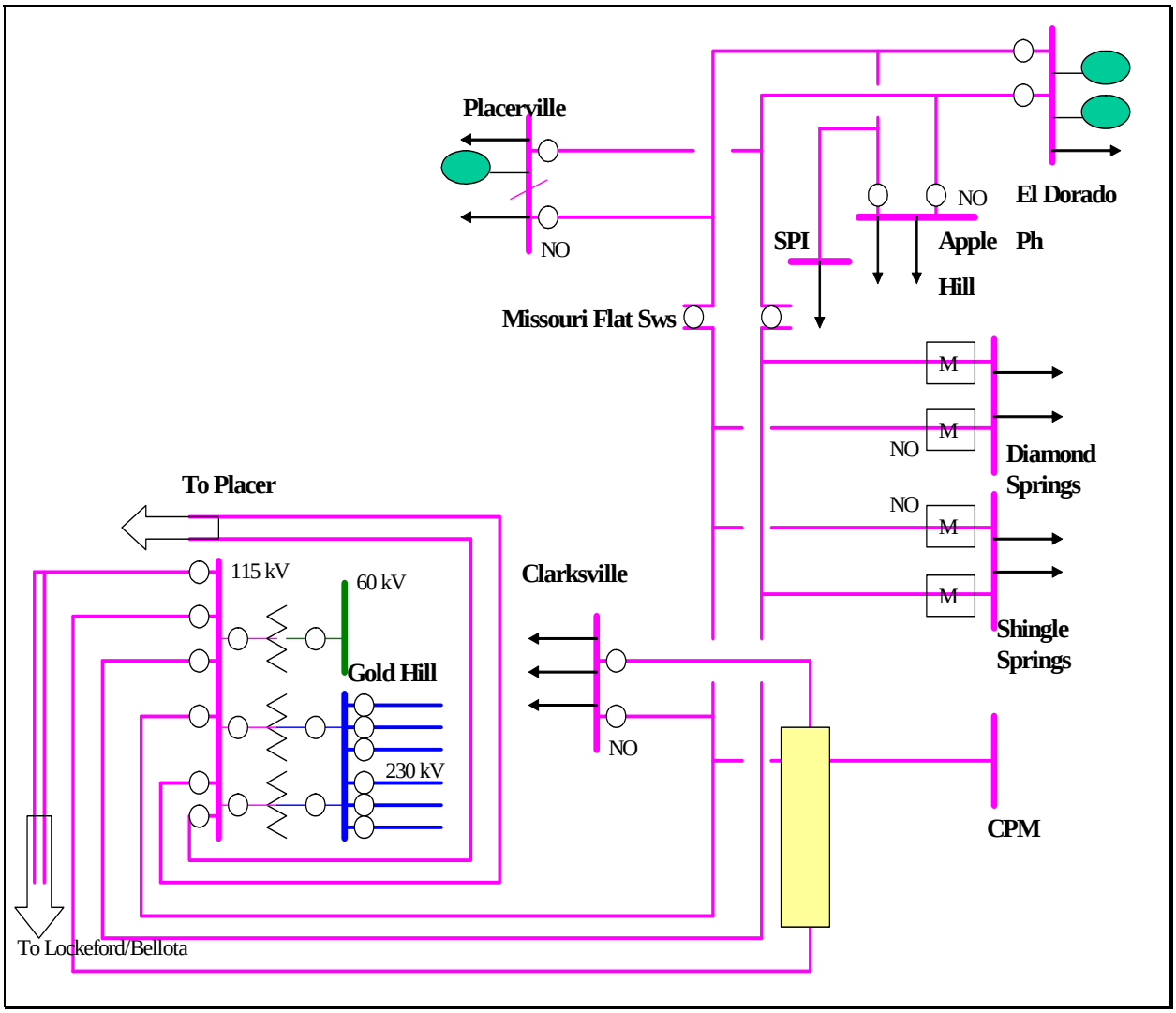

Figure 3-24: Scope Diagram

T759C: Atlantic – Lincoln Transmission

(Expected In Service Date – May 2011)

PROJECT INFORMATION

The Atlantic – Lincoln Transmission plan includes three separate construction projects ("project components"). These project components are:

1st Project Component

1. Reconductor the Atlantic – Pleasant Grove 60 kV No. 2 Line (about 6 miles) with 477 Aluminum Conductor Steel-Supported (ACSS) conductors, and
2. Reconductor the Lincoln – Pleasant Grove 60 kV Line (about 7 miles) with 477 ACSS conductors.

2nd Project Component

1. Convert and operate the Atlantic – Pleasant Grove Line Nos. 1 and 2 and the Lincoln – Pleasant Grove Line to 115 kV service,
2. Install a 230/115 kV transformer and associated equipment at Atlantic,
3. Replace the existing 230/60 kV transformer No. 2 at Atlantic with a 230/115 x 60 kV transformer and associated equipment, and
4. Replace the existing 60/12 kV transformer No. 2 at Lincoln with a 115/21 kV transformer and associated equipment.

3rd Project Component

1. Construct a new Rio Oso – Lincoln 115 kV Line with 477 ACSS conductors by replacing existing 60 kV and overbuilding existing 12 kV line facilities.

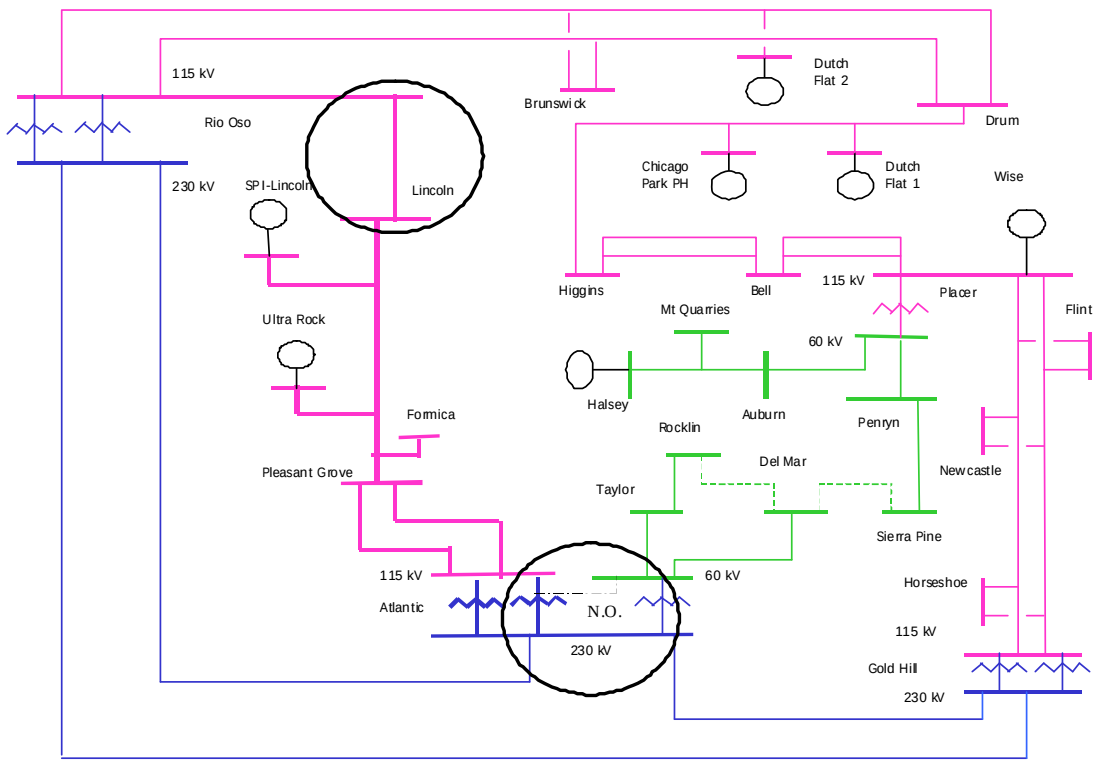

Atlantic – Lincoln Long Term Plan

Figure 3-25: Scope Diagram

T249: Bay Meadows 115 kV Reconductoring

(Expected In Service Date – May 2011)

PROJECT INFORMATION

This project proposes to reconductor the San Mateo – Bay Meadows 115 kV Nos. 1 and 2 lines (4.2 miles) with 477 ACSS conductors.

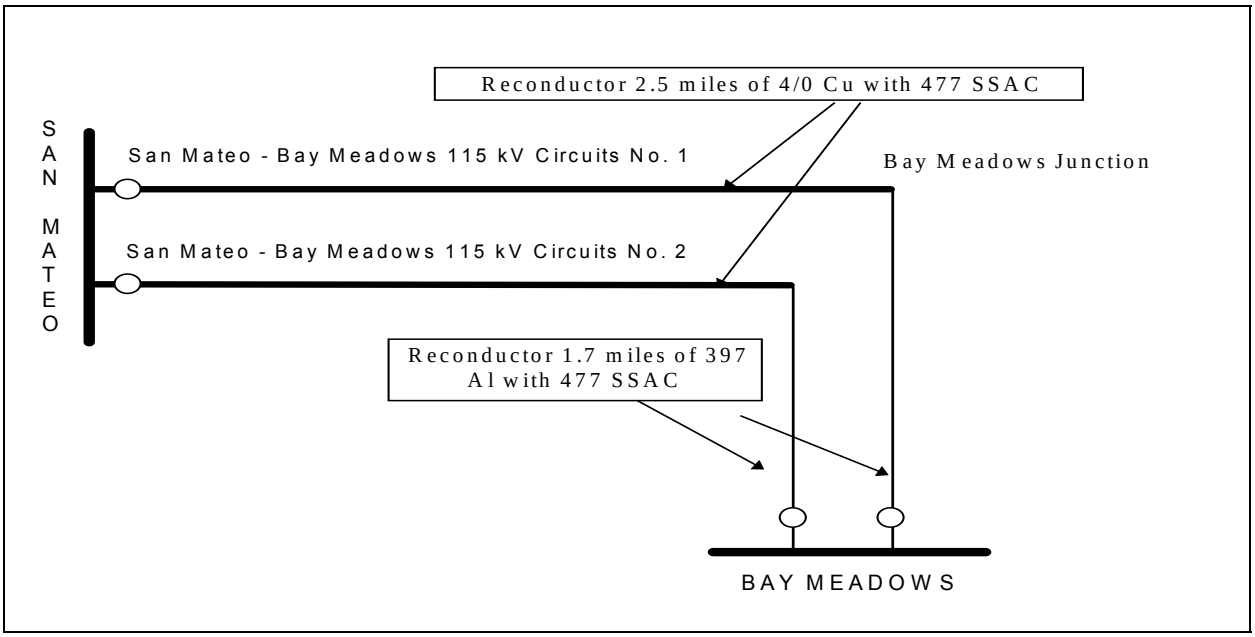

Figure 3-26: Scope Diagram

T993: Mendocino Coast Reactive Support

(Expected In Service Date – May 2011)

PROJECT INFORMATION

The preferred scope is to install between 10 MVArs and 15 MVArs of reactive support at Fort Bragg or Big River 60 kV substations.

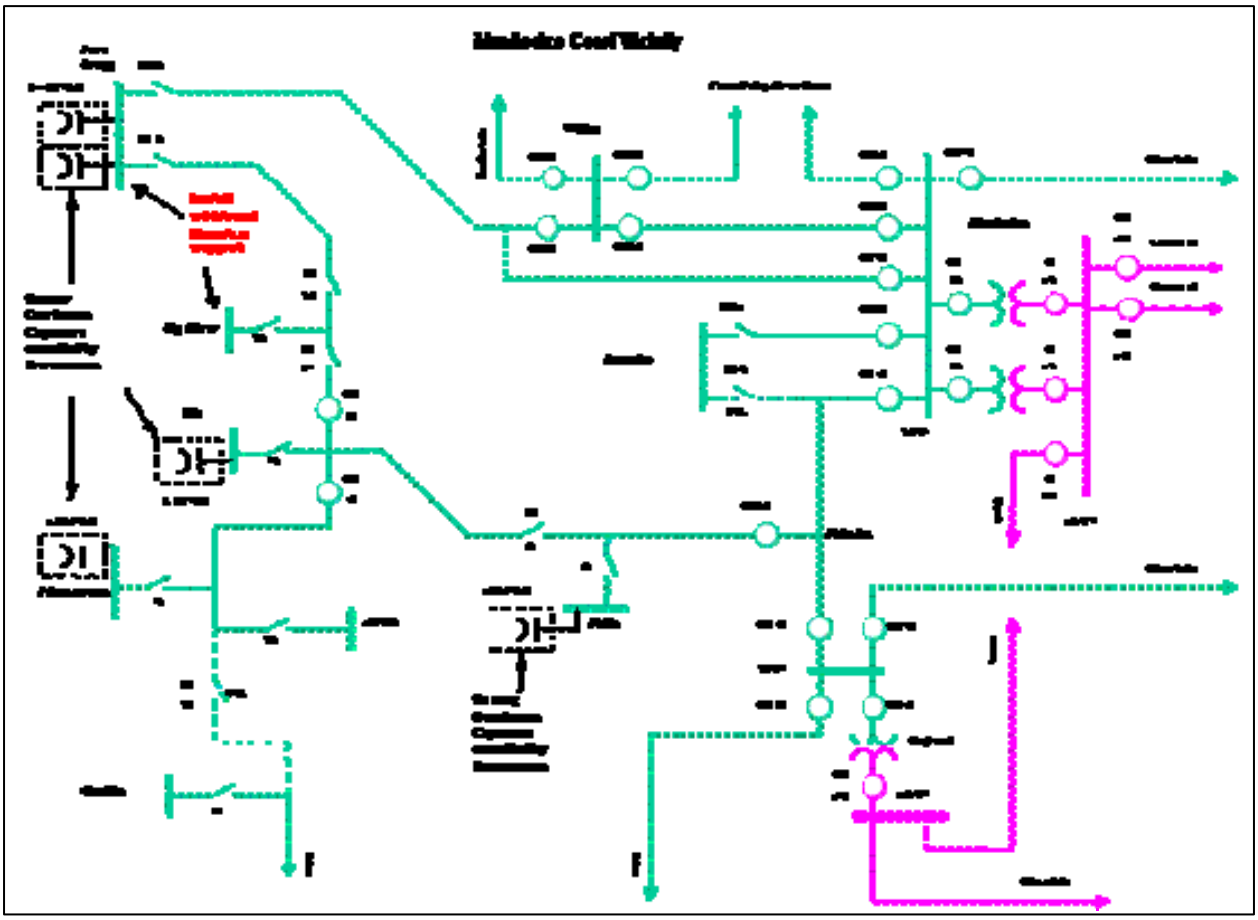

Figure 3-27: Scope Diagram

T967: Tesla 115 kV Capacity Increase

(Expected In Service Date – May 2011)

PROJECT INFORMATION

This project proposes to reconductor the Tesla – Salado – Manteca 115 kV Line with a higher capacity conductor (443 Amps or greater) and the Schulte Sw Station – Lammers 115 kV Line (0.9 circuit miles) with a higher capacity conductor (1,430 Amps or greater).

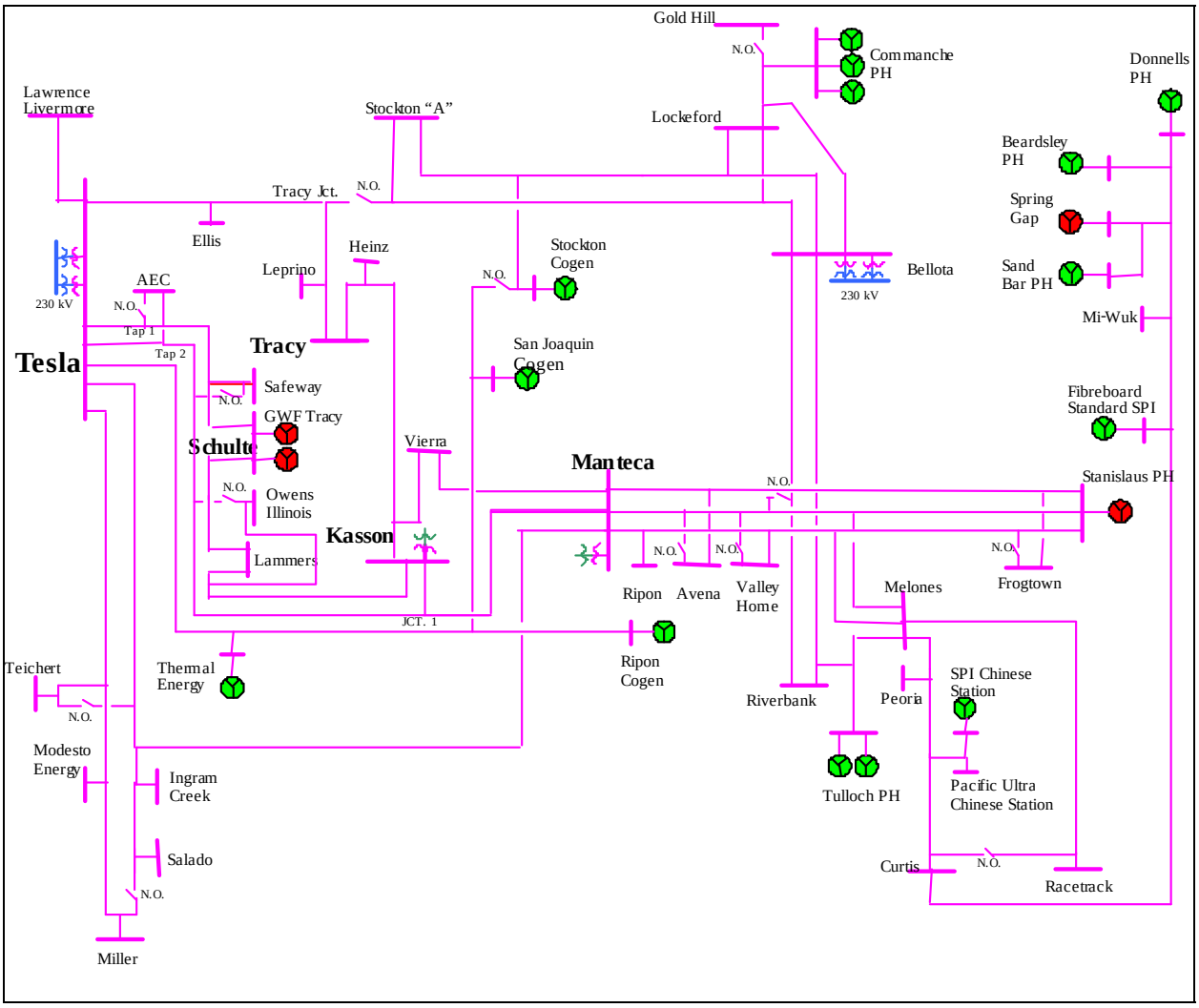

Figure 3-28: Scope Diagram

T979: Half Moon Bay Reactive Support

(Expected In Service Date May 2011)

PROJECT INFORMATION

The project scope is to install additional voltage support or to construct new 60 kV facilities into the Half Moon Bay area.

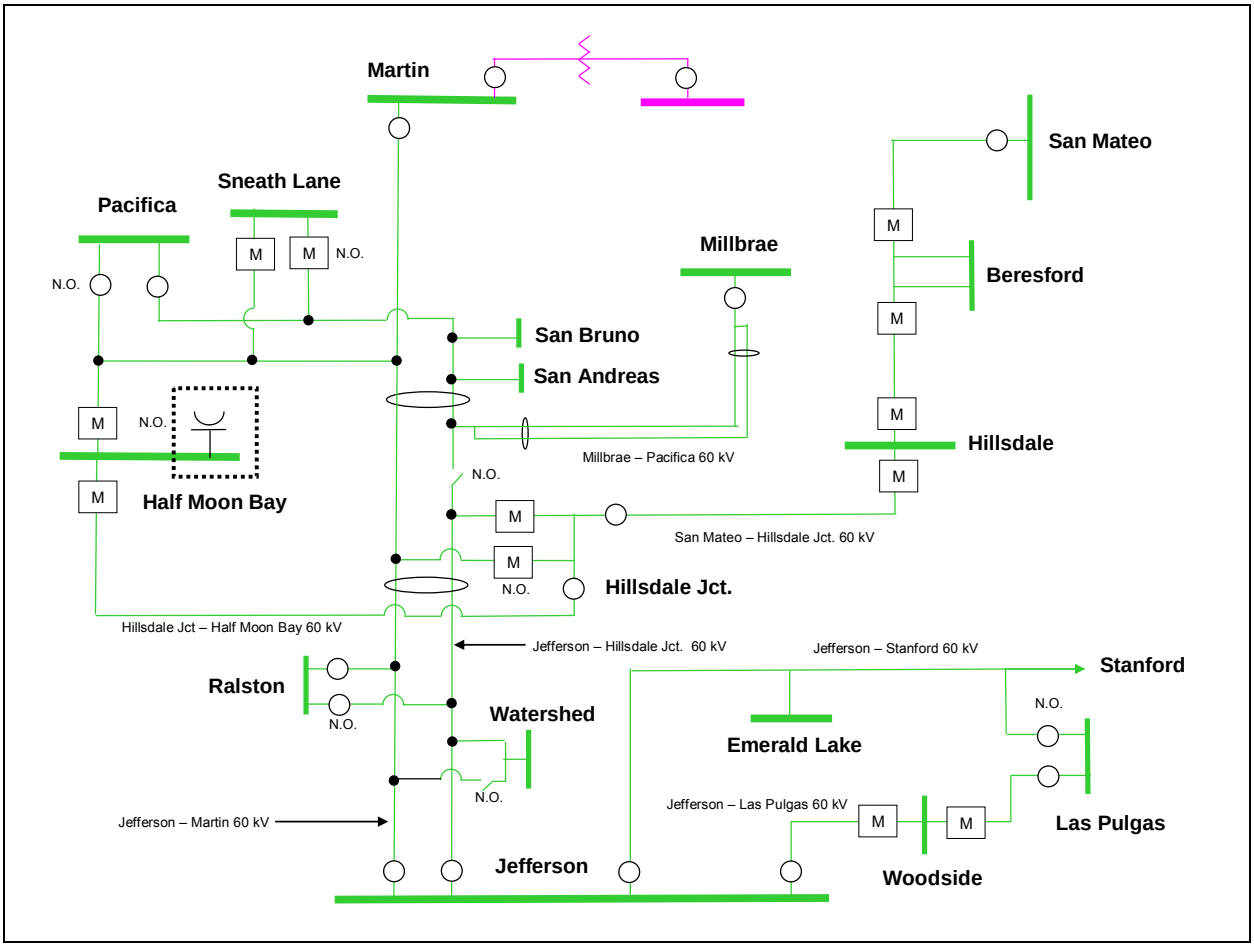

Figure 3-29: Scope Diagram

T686A : Palermo – Rio Oso 115 kV Line Reconductoring

(Expected In Service Date – May 2011)

PROJECT INFORMATION

The project scope is to re-construct sections of the existing Palermo-Rio Oso 115 kV double circuit tower line and re-conductor with 1,113 kcmil all aluminum conductor. This re-construction work would include a 40-mile section between Palermo and East Nicolaus substations. The re-conductor work would also include a 30-mile section between Palermo and Bogue Junction for a total of 70 circuit miles.

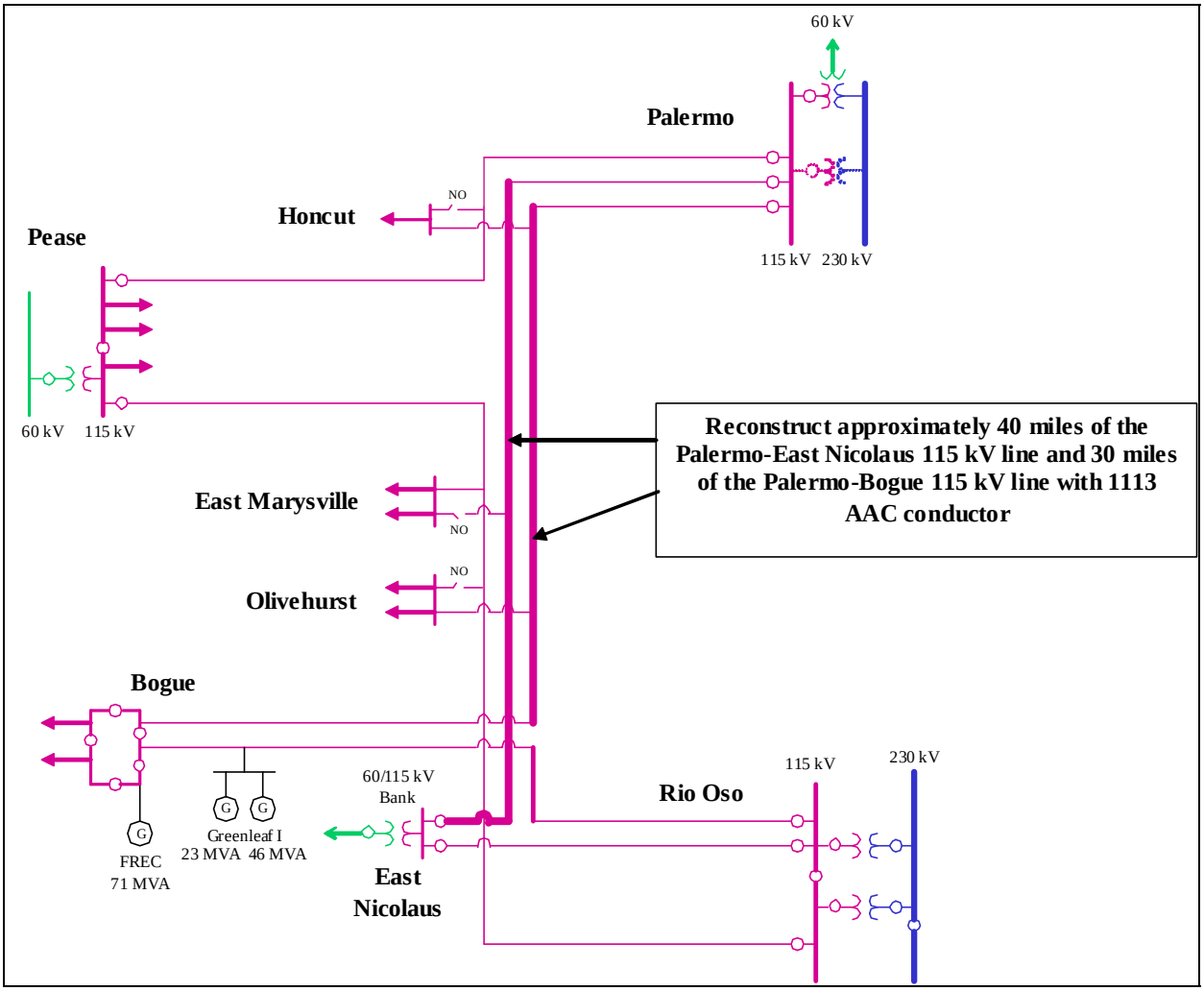

Figure 3-30: Scope Diagram

T1138: Del Monte – Fort Ord 60 kV Reinforcement Project

(Expected In Service Date June 2011)

PROJECT INFORMATION

This project is a multi-year project. The initial scope (Phase 1) is to be completed by May 2010 and includes the installation of two circuit breakers at Fort Ord Substation, so that Fort Ord is normally supplied by both the Del Monte Nos. 1 and 2 60 kV lines. These 60 kV circuit breakers will be rated to handle at least 1,000 Amps. Also, both lines will be re-rated to have 4 fps emergency ratings of 415 Amps. The Phase 2 scope of the project, to be completed by 2012, will be to reconductor both lines with a conductor having a summer normal ampacity of 700 Amps.

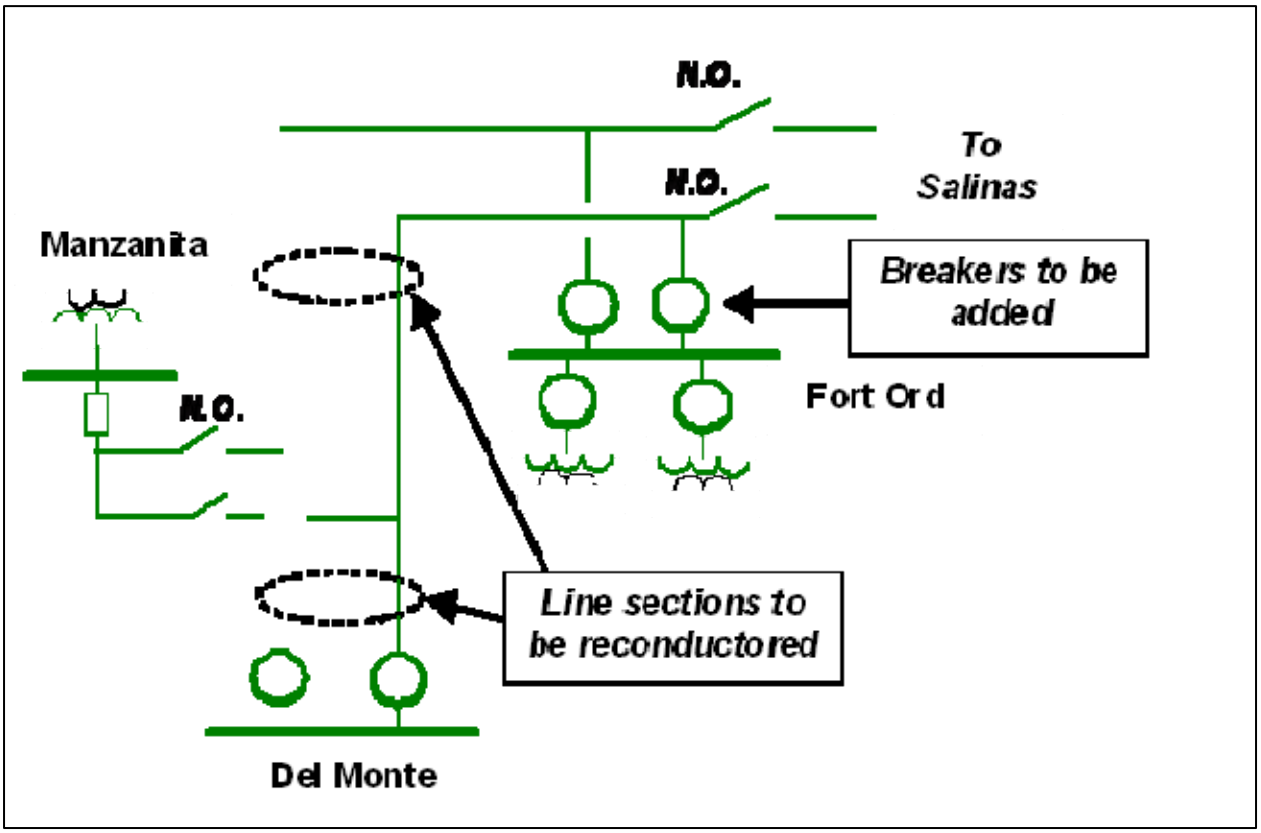

Figure 3-31: Scope Diagram

T1120: Shepherd Substation Interconnection

(Expected In Service Date June 2011)

PROJECT INFORMATION

The project scope is to loop the proposed Shepherd Substation off the Kerckhoff-Clovis-Sanger No. 1 115 kV Line. Looping Shepherd Substation would require building a new 115 kV double circuit tower line (2 miles long) from Shepherd Substation to the Kerckhoff-Clovis-Sanger No. 1 115 kV Line. The new double circuit tower line conductor will be sized to handle a minimum capacity of 600 Amps for summer normal conditions and 1,355 Amps for summer emergency conditions. The scope of this project also includes the installation of 115 kV shunt capacitors at Shepherd Substation capable of providing 50 MVArs of reactive support.

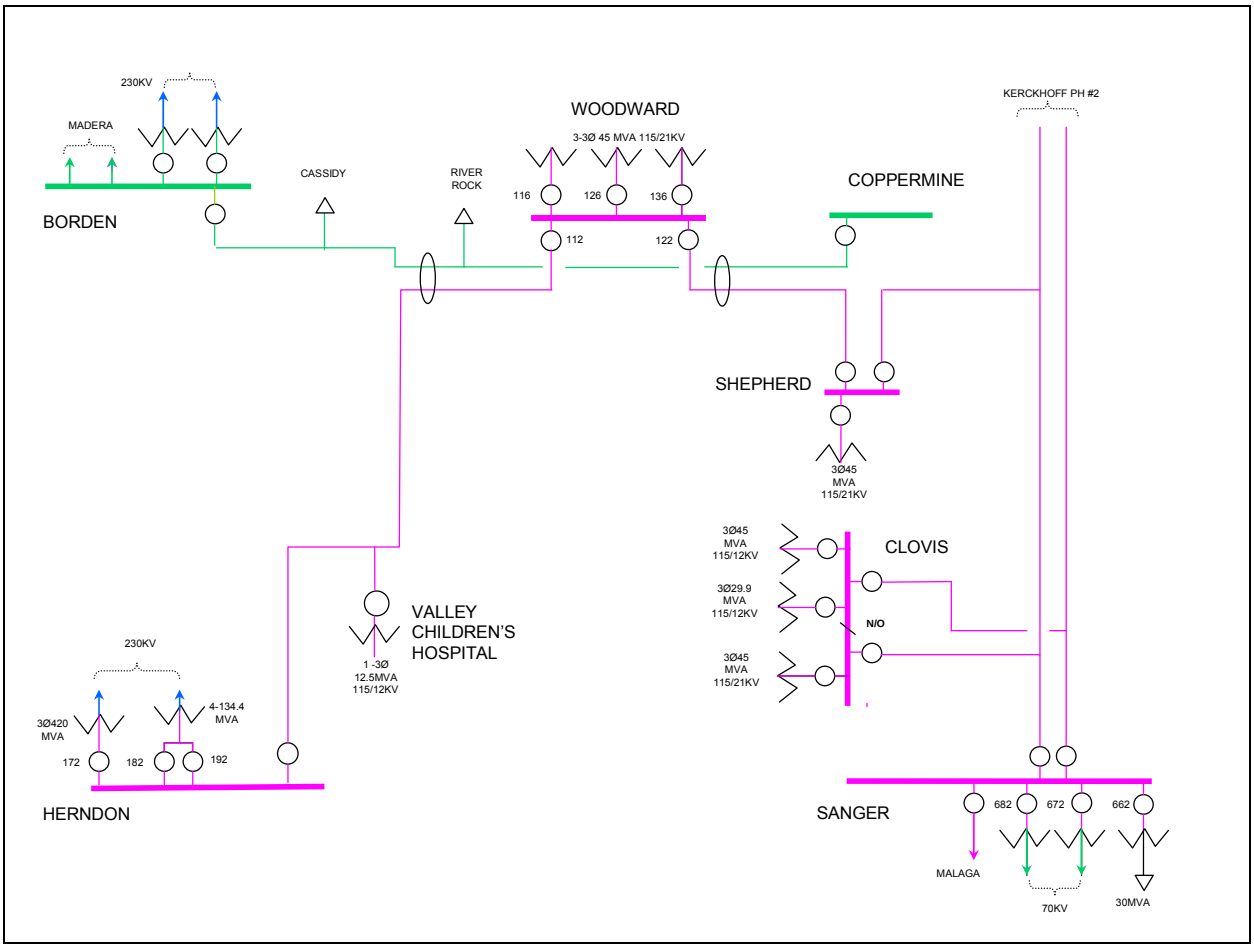

Figure 3-32: Scope Diagram

T1091: Tri-Valley Voltage Control

(Expected In Service Date – September 2011)

PROJECT INFORMATION

The project scope is to install three 48 MVAR shunt reactors on the North Dublin-Vineyard 230 kV Line. The reactors will be installed on the line-side of the station circuit breakers at Vineyard Substation (2 shunt reactors) and North Dublin Substation (1 shunt reactor). All of the shunt reactors will be in-service except for the second shunt reactor at Vineyard Substation, which will serve as a spare. If necessary, the project scope may also include the upgrade of terminal equipment at North Dublin and Vineyard substations to accommodate the shunt reactors.

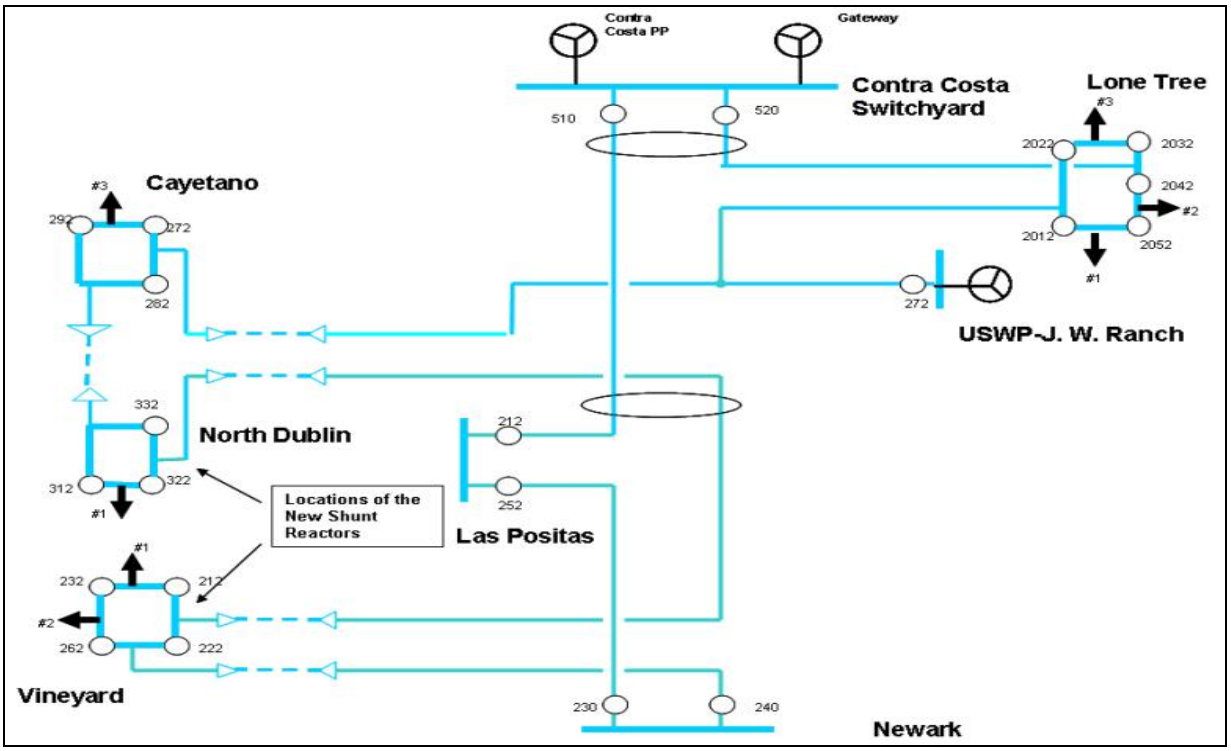

Figure 3-33: Scope Diagram

T994: Lakeville – Ignacio #2 230 kV Line

(Expected In Service Date – December 2011)

PROJECT INFORMATION

This project re-establishes a second 230 kV transmission line between Lakeville and Ignacio Substation.

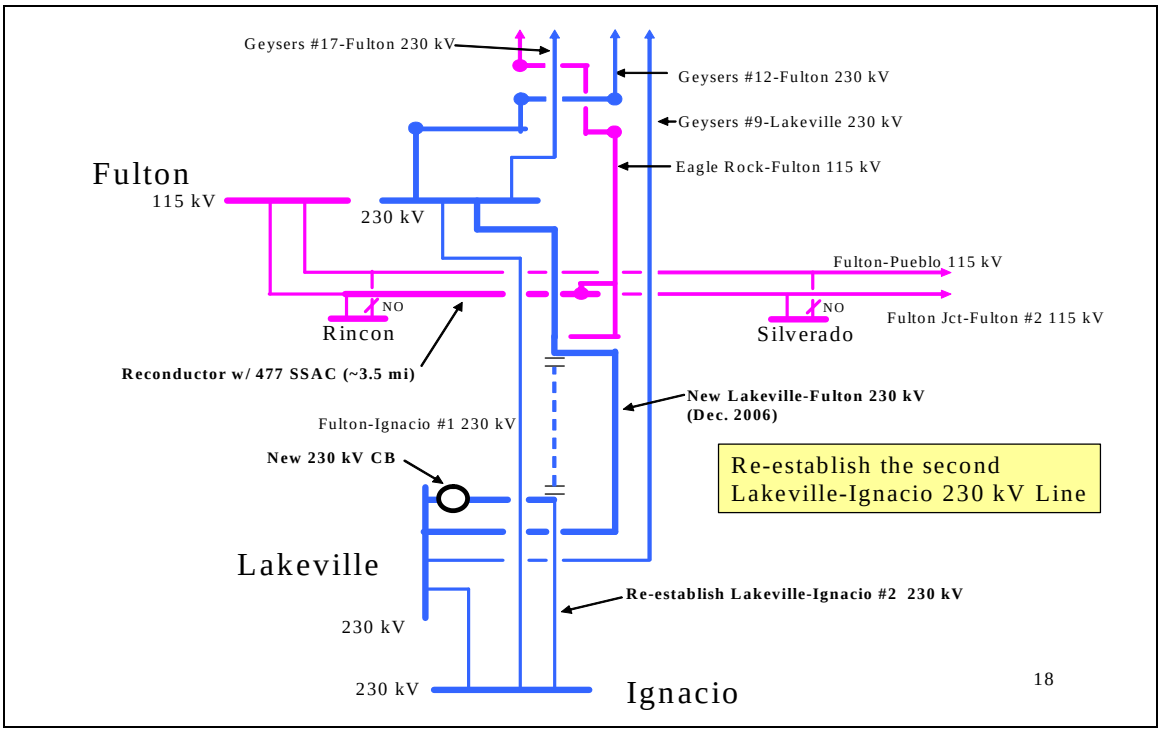

Figure 3-34: Scope Diagram

T1173: Santa Cruz 115 kV Reinforcement

(Expected In Service Date December 2011)

PROJECT INFORMATION

This project scope is to rebuild the 7.5-mile Green Valley – Rob Roy section of the Green Valley – Paul Sweet 115 kV line into a double-circuit line, install three breakers at Rob Roy Substation and install 20 – 30 MVAR of reactive support at Camp Evers Substation. The rebuilt double-circuit line will be sized with conductors capable of handling a minimum of 700 Amps for summer normal conditions and 800 Amps for summer emergency conditions.

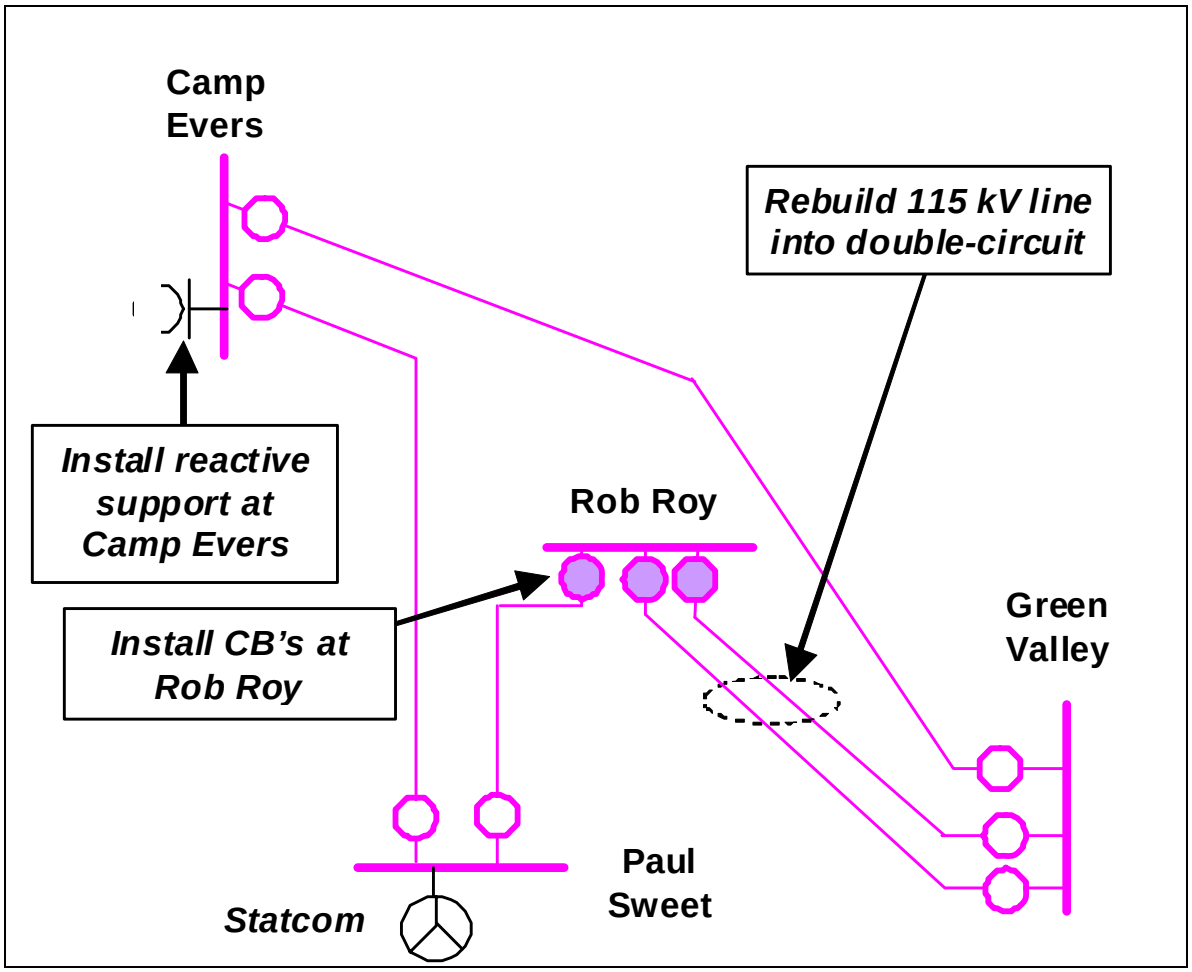

Figure 3-35: Scope Diagram

T1030: Table Mountain – Rio Oso 230 kV Reconductor and Tower Raises

(Expected In Service Date – December 2011)

PROJECT INFORMATION

The project scope is to replace the two existing 230 kV circuit breakers at Colgate Power House Switchyard with 2,000 Amp rated circuit breakers. Associated substation terminal equipment will be replaced and sized to handle the 2,000 Amp rated circuit breakers.

In addition, this project is being coordinated with a maintenance project that involves raising transmission line towers (103) on the Table Mountain-Rio Oso 230 kV double circuit tower lines (DCTL). This will also involve reconductoring 136 circuit miles on the Table Mountain-Rio Oso 230 kV DCTL with 795 SSAC conductors. The expected in-service date of this maintenance work is by May 2011.

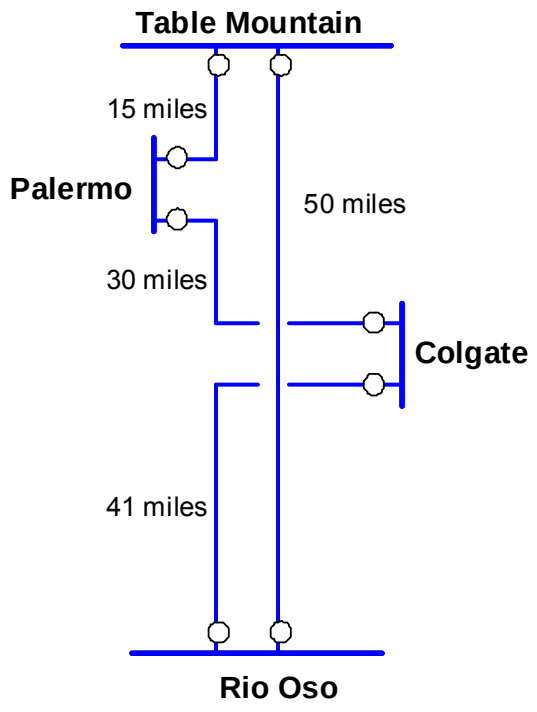

Figure 3-36: Scope Diagram

T947: Hollister 115 kV Reconductoring

(Expected In Service Date – December 2011)

PROJECT INFORMATION

This project will reconductor the Hollister Taps sections of the Moss Landing – Salinas – Soledad Nos. 1 and 2 115 kV lines with 477 SSAC conductors.

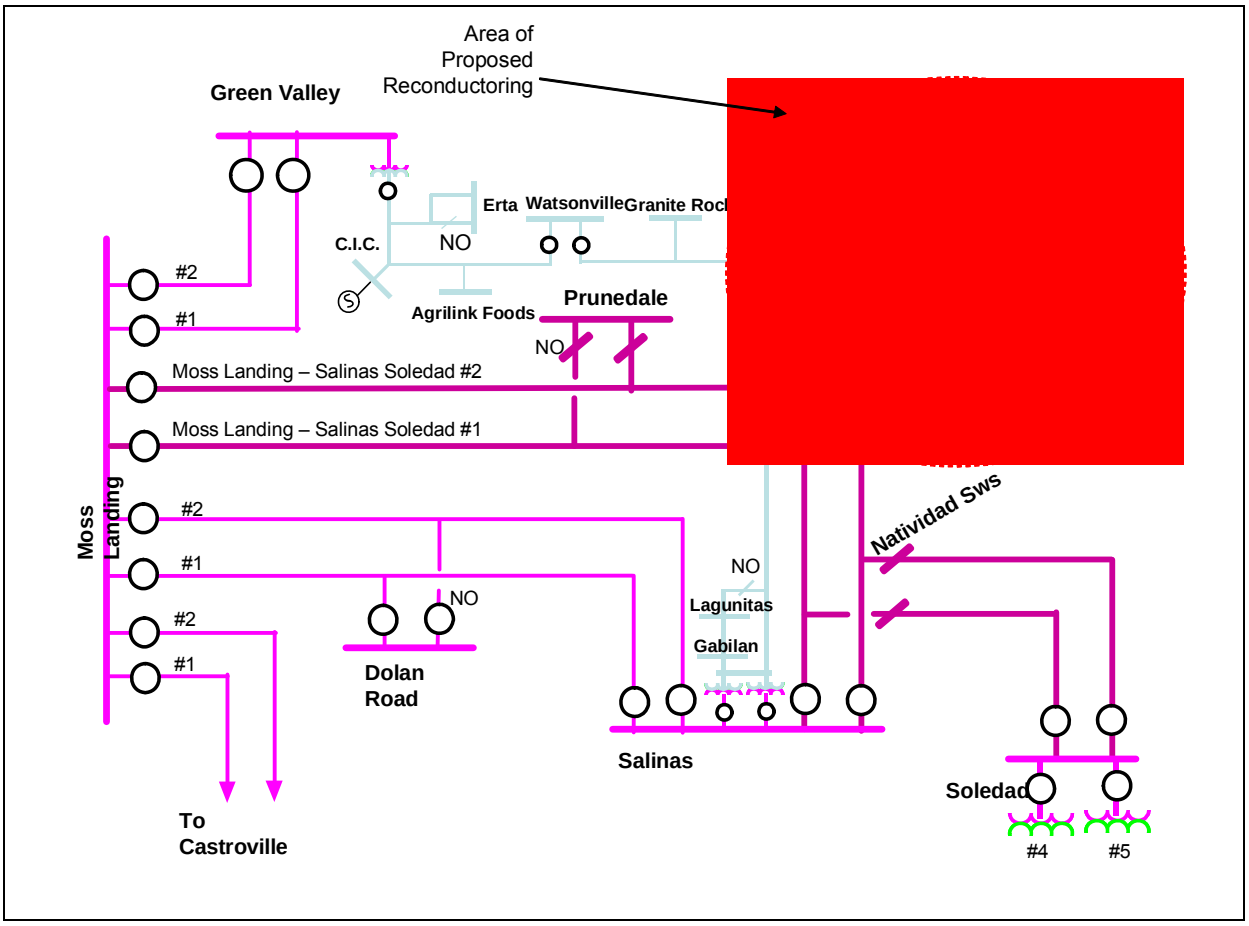

Figure 3-37: Scope Diagram

T962: East Nicolaus 115 kV Area Reinforcement

(Expected In Service Date – December 2011)

PROJECT INFORMATION

The project scope is to replace the East Nicolaus 115/60 kV Transformer No. 2 with a transformer rated at 180 MVA or larger (four single phases, each rated at 60 MW per phase) and replace the adjacent voltage regulator.

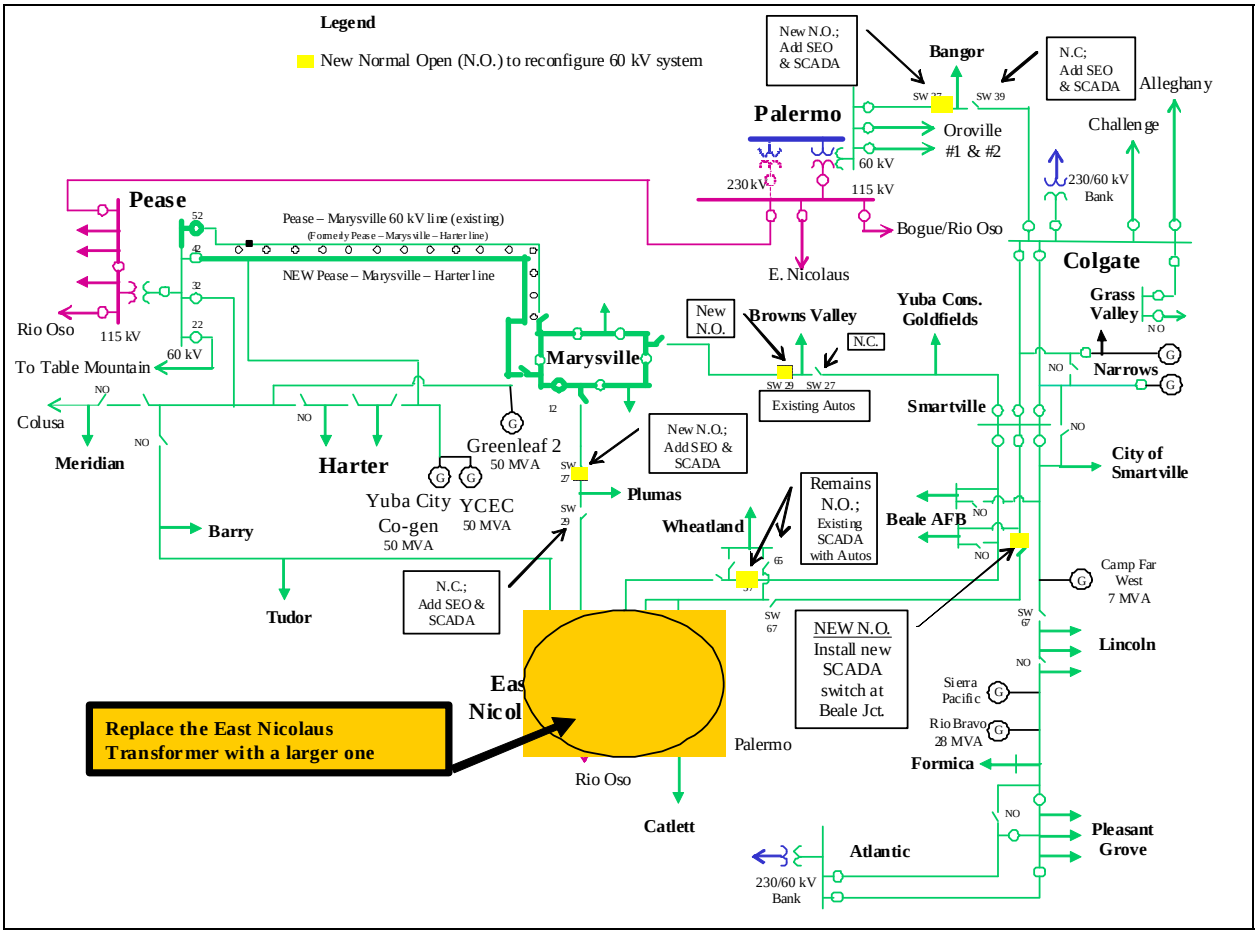

Figure 3-38: Scope Diagram

T972: Vaca Dixon – Birds Landing 230 kV Reconductoring

(Expected In Service Date – December 2011)

PROJECT INFORMATION

The project scope is to reconductor the Vaca Dixon – Peabody, Vaca Dixon – Lambie and Lambie – Birds Landing 230 kV lines with 1113 ACSS conductors.

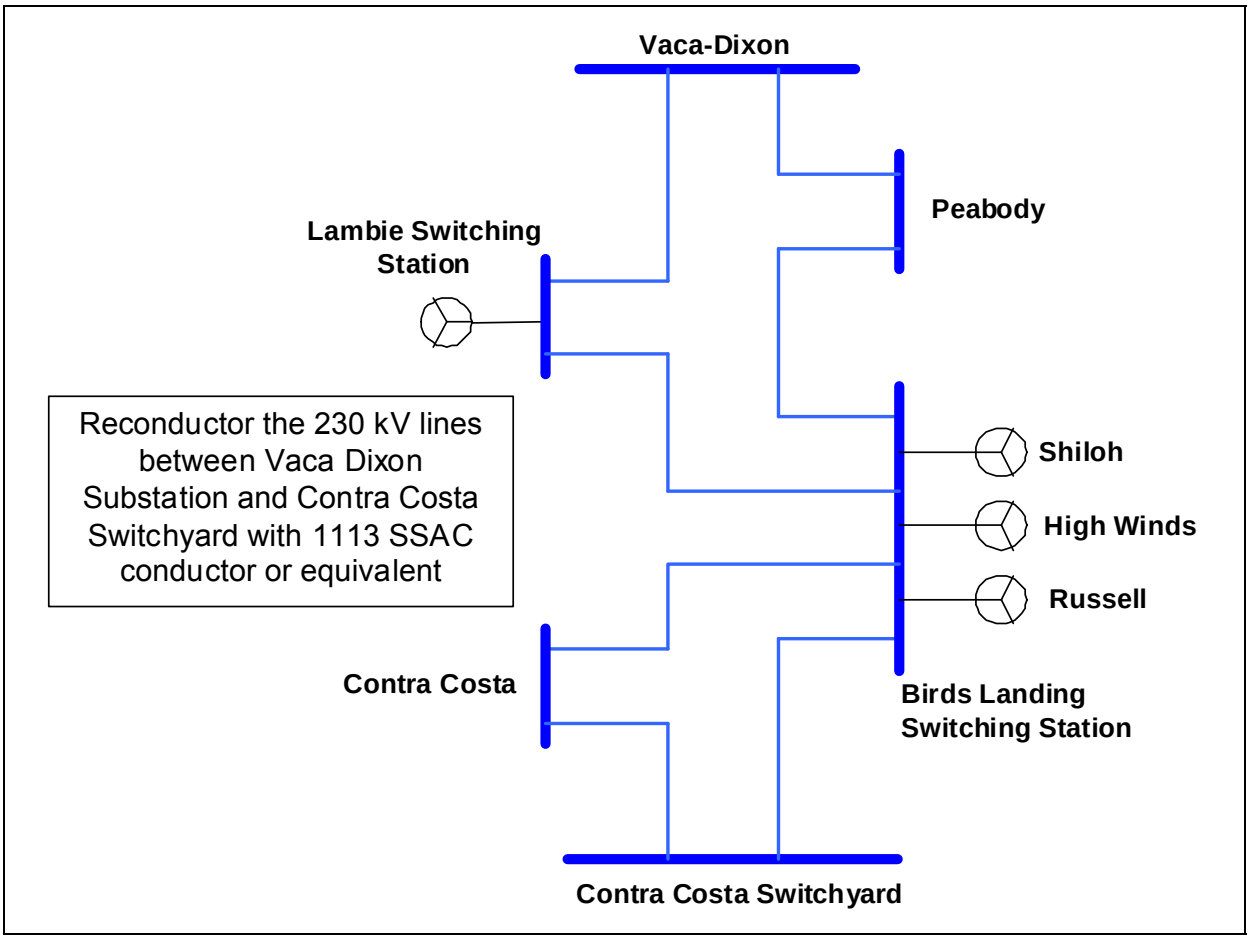

Figure 3-39: Scope Diagram

T1090: Midway – Renfro 115 kV Line Reconductor

(Expected In Service Date – May 2012)

PROJECT INFORMATION

The project scope is to reconductor the Midway-Renfo 115 kV Line (16 miles) and the Midway-Rio Bravo-Renfro 115 kV Line (16 miles) with conductors capable of carrying a minimum capacity of 1,517 Amps under both summer normal and emergency conditions. If necessary, associated line switches, and substation terminal equipment would be upgraded. In addition, the project scope would require obtaining any necessary environmental and land permits to complete the reconductoring work.

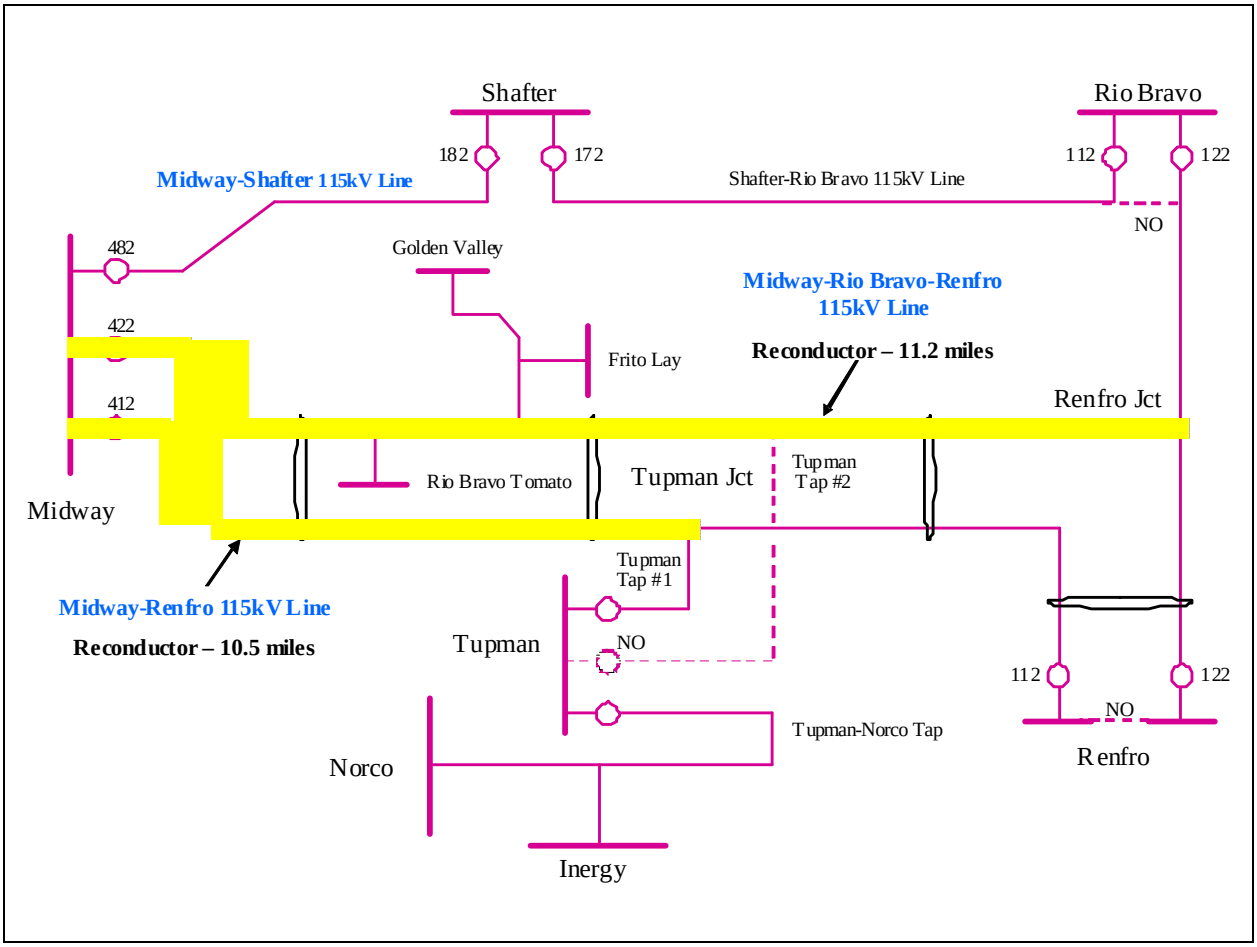

Figure 3-40: Scope Diagram

T1058: San Justo Substation Interconnection

(Expected In Service Date May 2012)

PROJECT INFORMATION

The project scope is to interconnect a new 115/21 kV distribution substation in San Juan Bautista. The 115 kV bus for this new substation (San Juan Substation) will be configured as a ring-bus. The Crazy Horse-Hollister No. 1 115 kV line will be looped into the new substation.

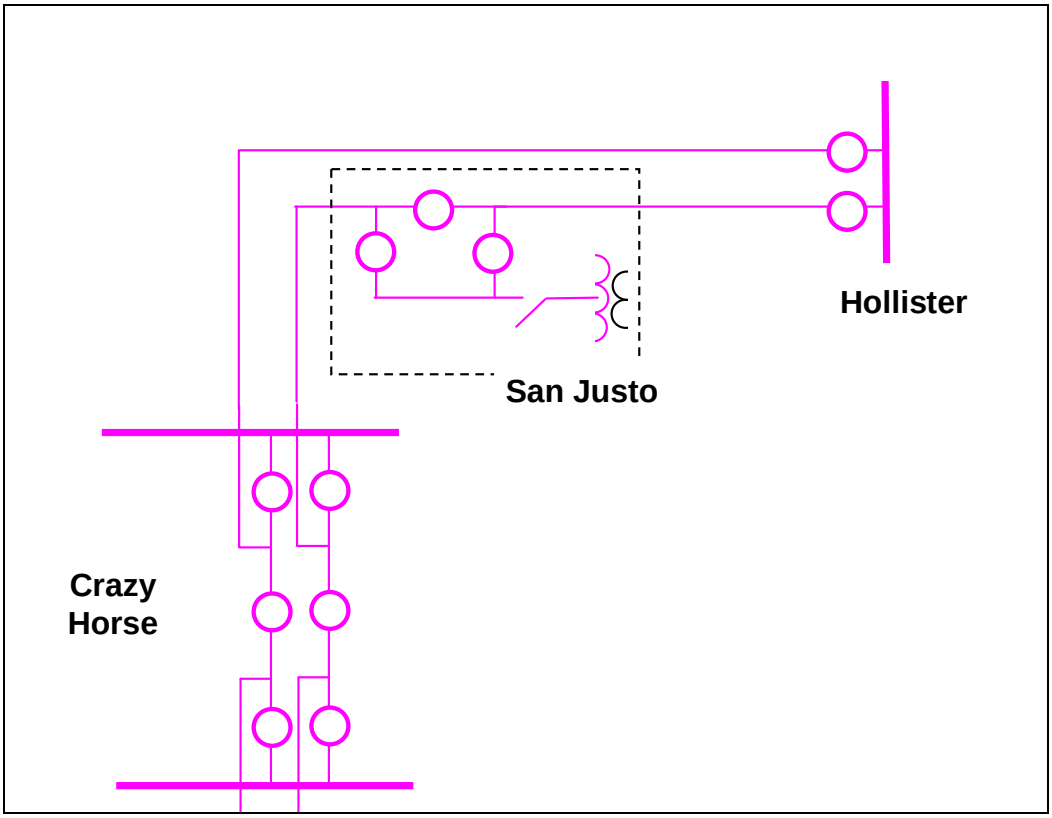

Figure 3-41: Scope Diagram

T1003: Herndon 230/115 kV Transformer

(Expected In Service Date – May 2012)

PROJECT INFORMATION

The project scope is to install a third 230/115 kV transformer bank at Herndon Substation. This scope would include expanding the 115 kV and 230 kV buses and adding the necessary terminal equipment to interconnect this new transformer bank. This new transformer will be sized to handle at least 420 MVA.

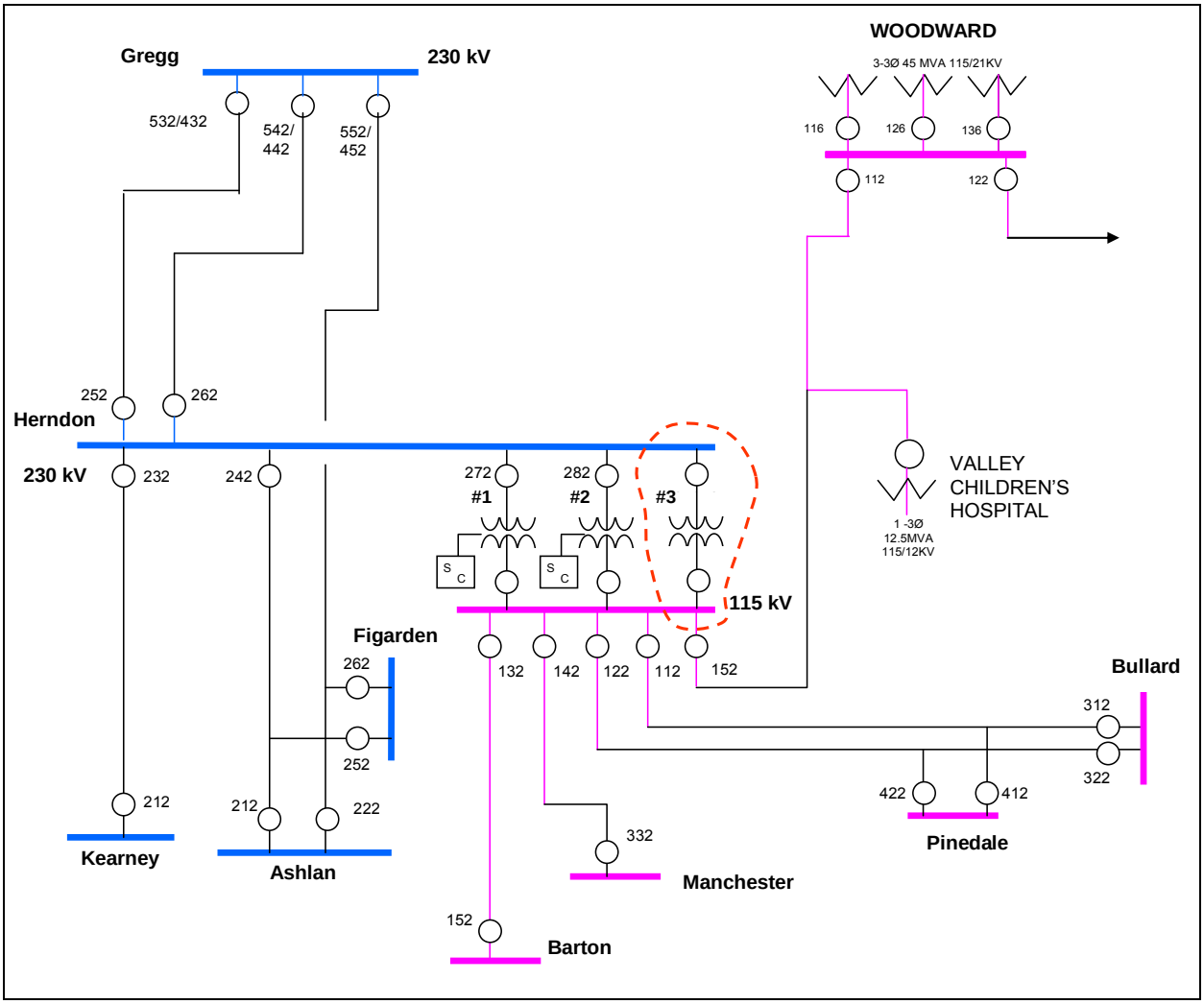

Figure 3-42: Scope Diagram

T444C: Missouri Flat – Gold Hill 115 kV Line

(Expected In Service Date – May 2012)

PROJECT INFORMATION

The project scope is to reconductor the Missouri Flat-Gold Hill 115 kV Nos. 1 and 2 lines between Gold Hill and Shingle Springs substations with higher capacity conductors that are rated to handle at least 1,100 Amps under emergency conditions.

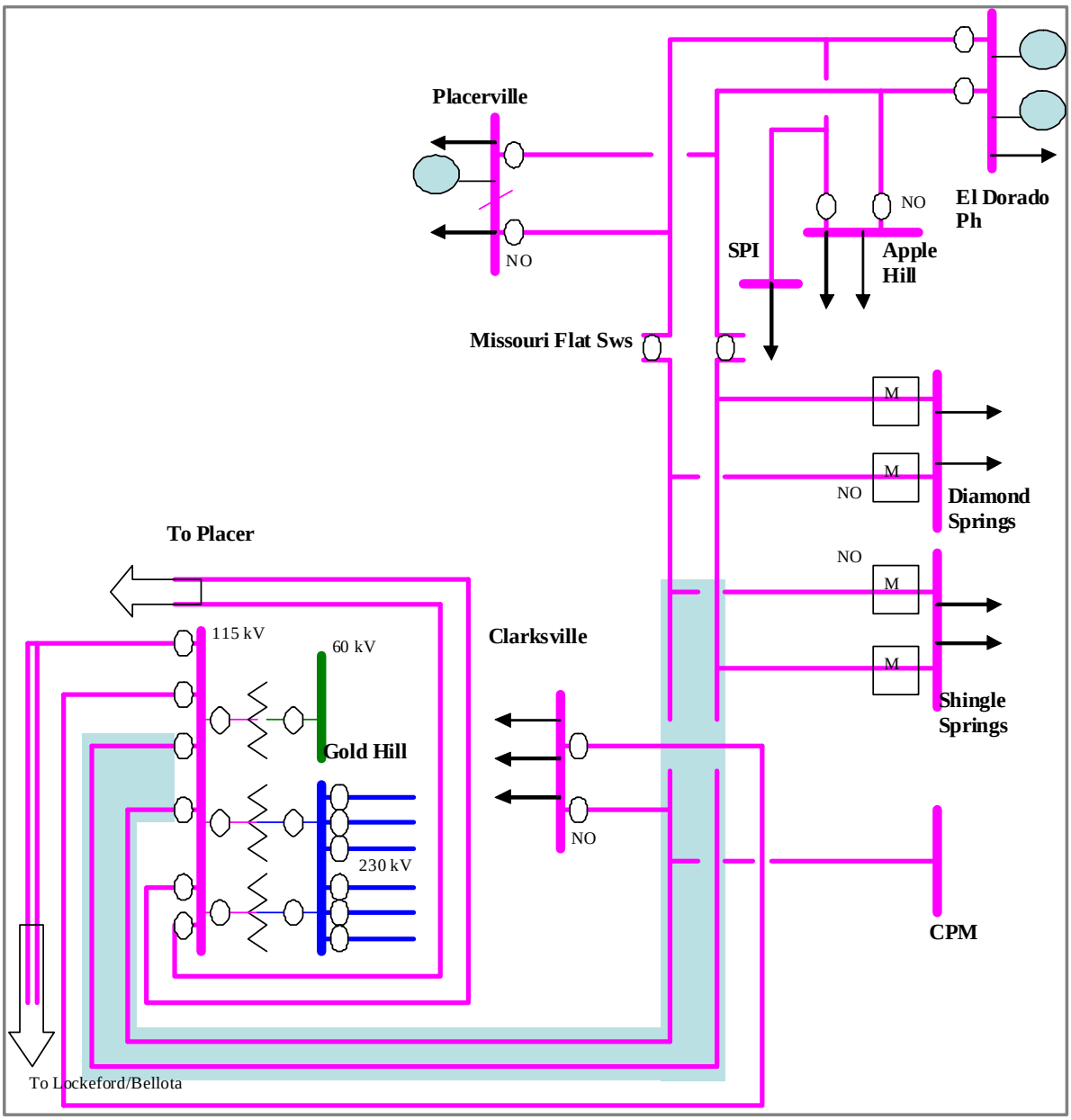

Figure 3-43: Scope Diagram

T1000: Wheeler Ridge 230/70 kV Transformer

(Expected In Service Date – May 2012)

PROJECT INFORMATION

The project scope is to install a second 230/70 kV transformer at Wheeler Ridge Substation. This transformer will be sized to handle a rating of 200 MVA or higher.

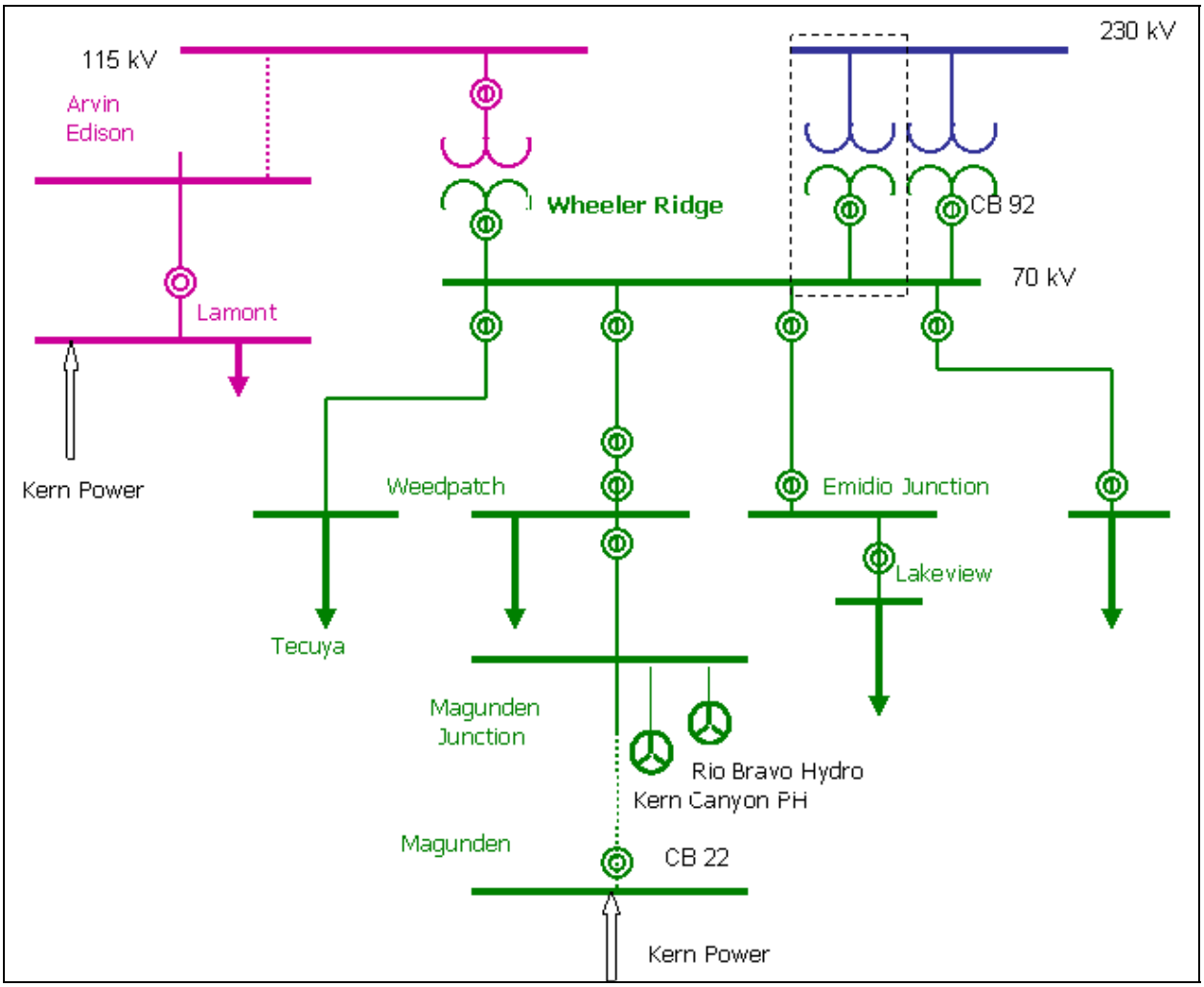

Figure 3-44: Scope Diagram

T1033: Cooley Landing 115/60 kV Transformer Capacity Uprade

(Expected In Service Date – May 2012)

PROJECT INFORMATION

This project scope is to replace Cooley Landing 115/60 kV Transformer No. 1 with four 60 MVA, single-phase units, and Cooley Landing 115/60 kV Transformer No. 2 with three 60 MVA, single-phase units by May 2011.

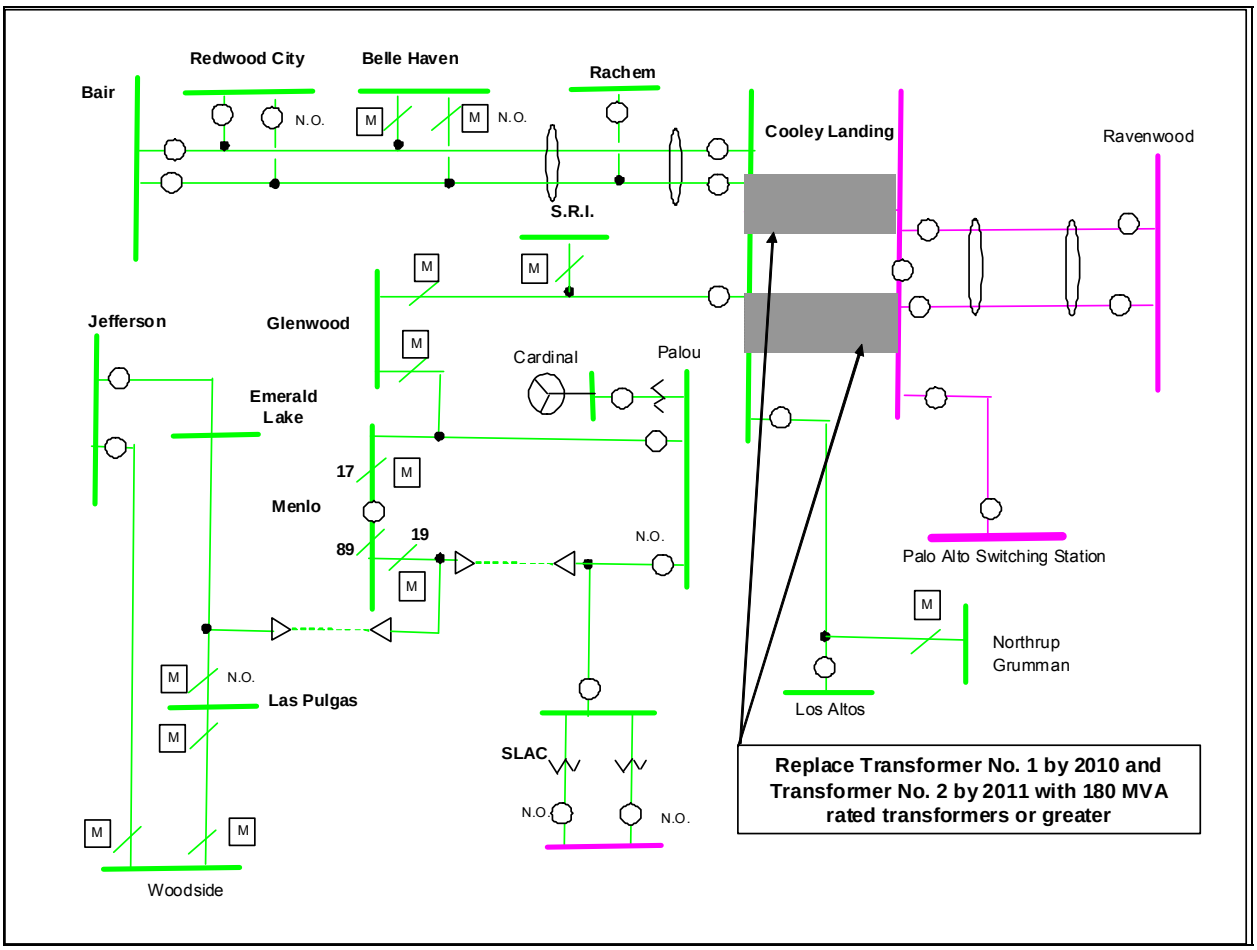

Figure 3-45: Scope Diagram

T990: Moraga Transformer Capacity Increase

(Expected In Service Date – May 2012)

PROJECT INFORMATION

The project scope is to replace Moraga Transformer Nos. 1 and 2 with transformers rated to each handle 420 MVA or higher.

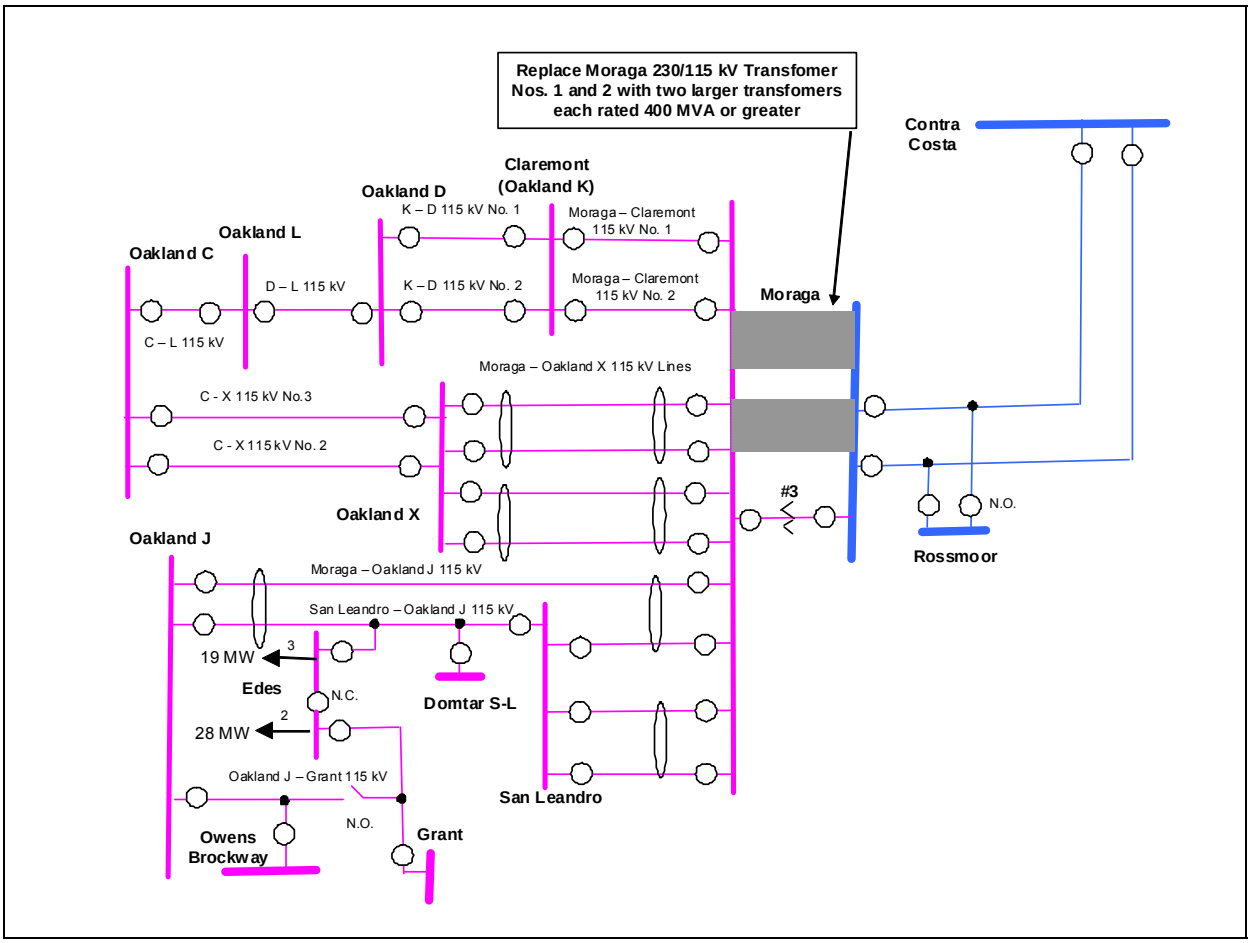

Figure 3-46: Scope Diagram

T444D: Gold Hill - Horseshoe 115 kV Reinforcement

(Expected In Service Date – June 2012)

PROJECT INFORMATION

The proposed project scope is to reconductor the limiting conductors (16 miles) from Gold Hill to Horseshoe substations on both Placer – Gold Hill 115 kV Lines with conductors capable of carrying a minimum of 1,100 Amps for summer normal and emergency conditions.

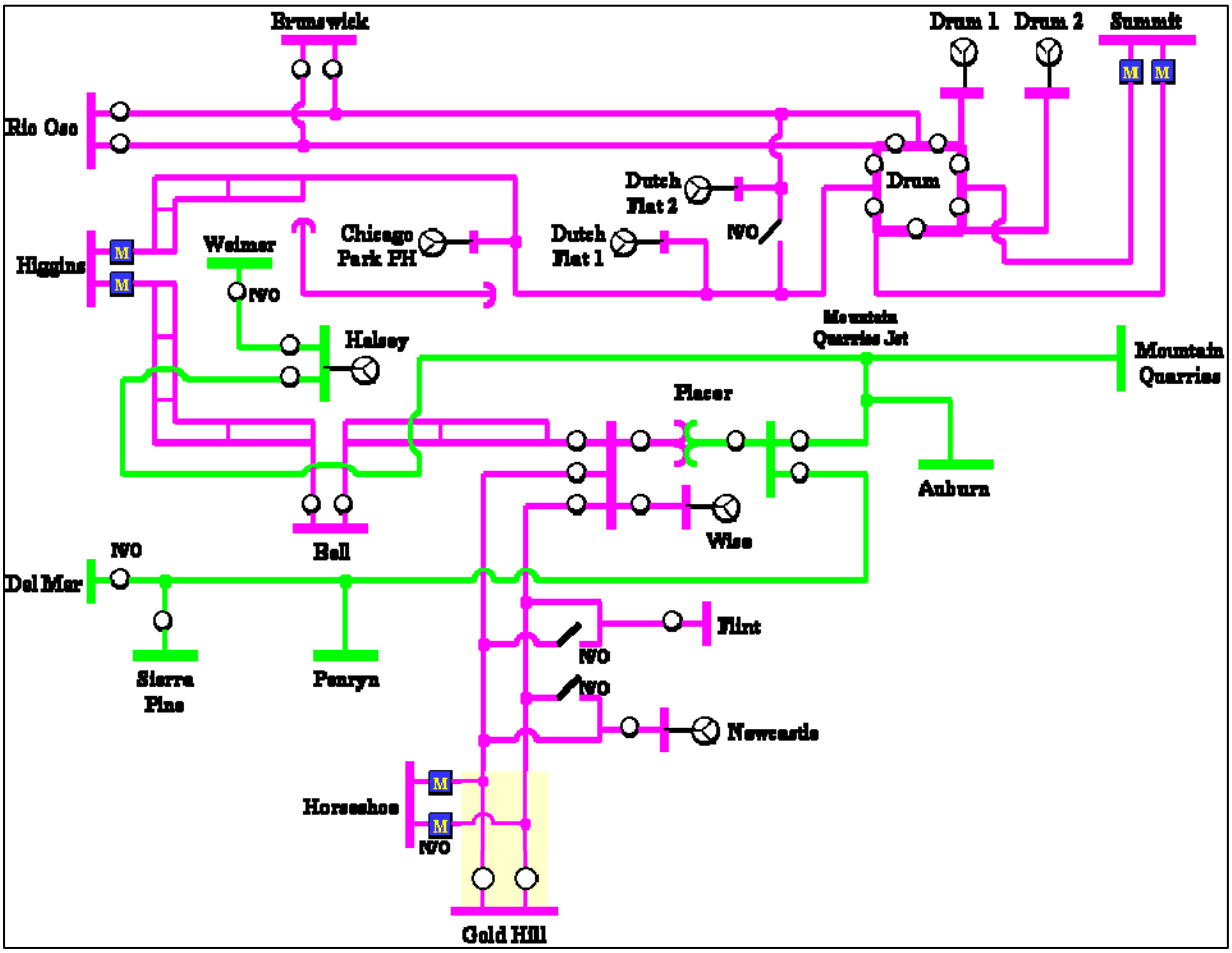

Figure 3-47: Scope Diagram

T1006: Valley Springs 230/60 kV Transformer Addition

(Expected In Service Date – December 2012)

PROJECT INFORMATION

The recommended scope is to install an additional 230/60 kV three-phase transformer bank at Valley Springs with a normal rating of 200 MVA. It is also recommended to reconfigure the existing 230 kV bus to the standard breaker and a half (BAAH) arrangement for two transformer banks and two transmission lines.

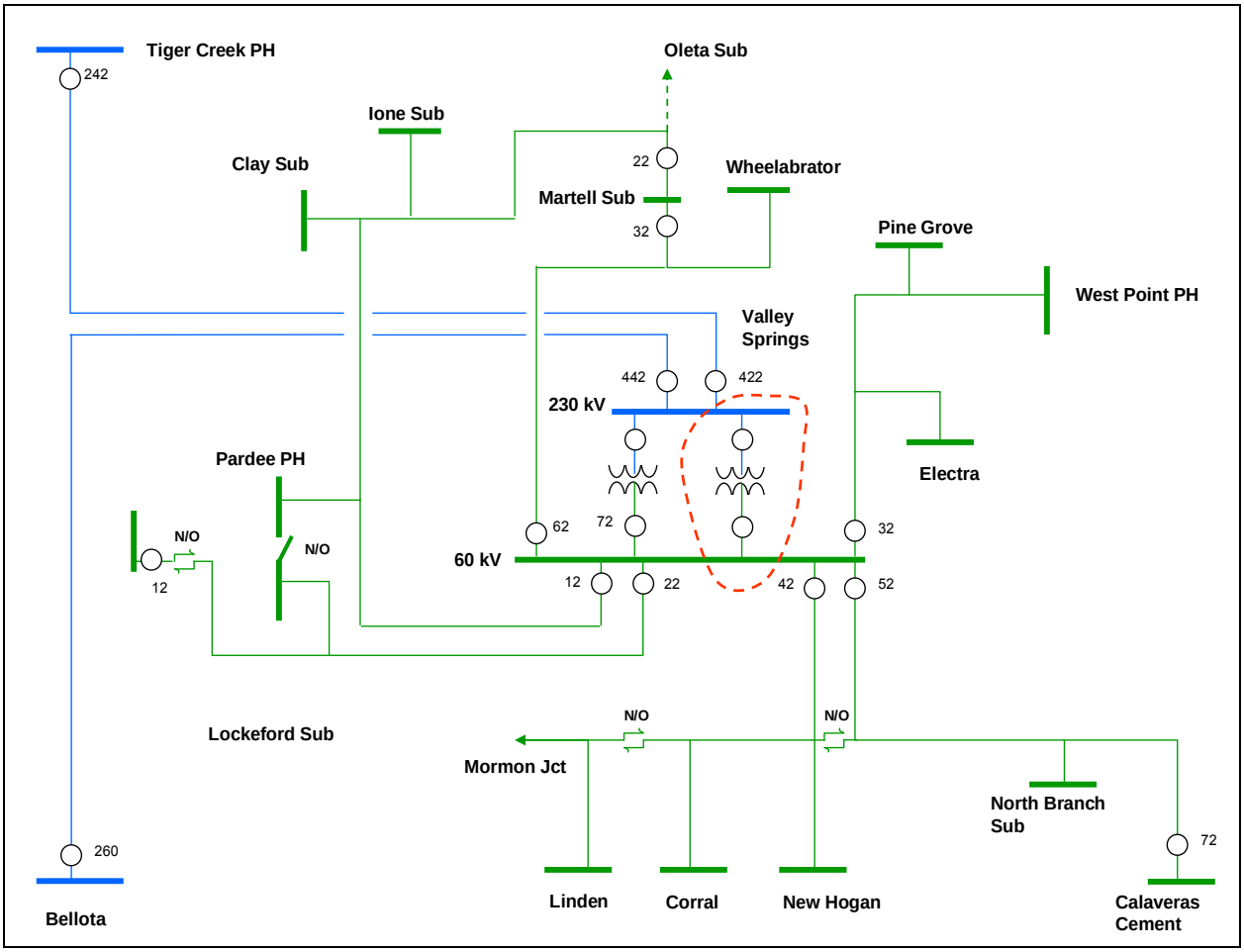

Figure 3-48: Scope Diagram

T1072: Humboldt 115/60 kV Transformer Replacement

(Expected In Service Date December 2012)

PROJECT INFORMATION

The project scope is to replace Humboldt 115/60 kV Transformer Nos. 1 & 2 with 200 MVA rated, 115/60 kV transformers.

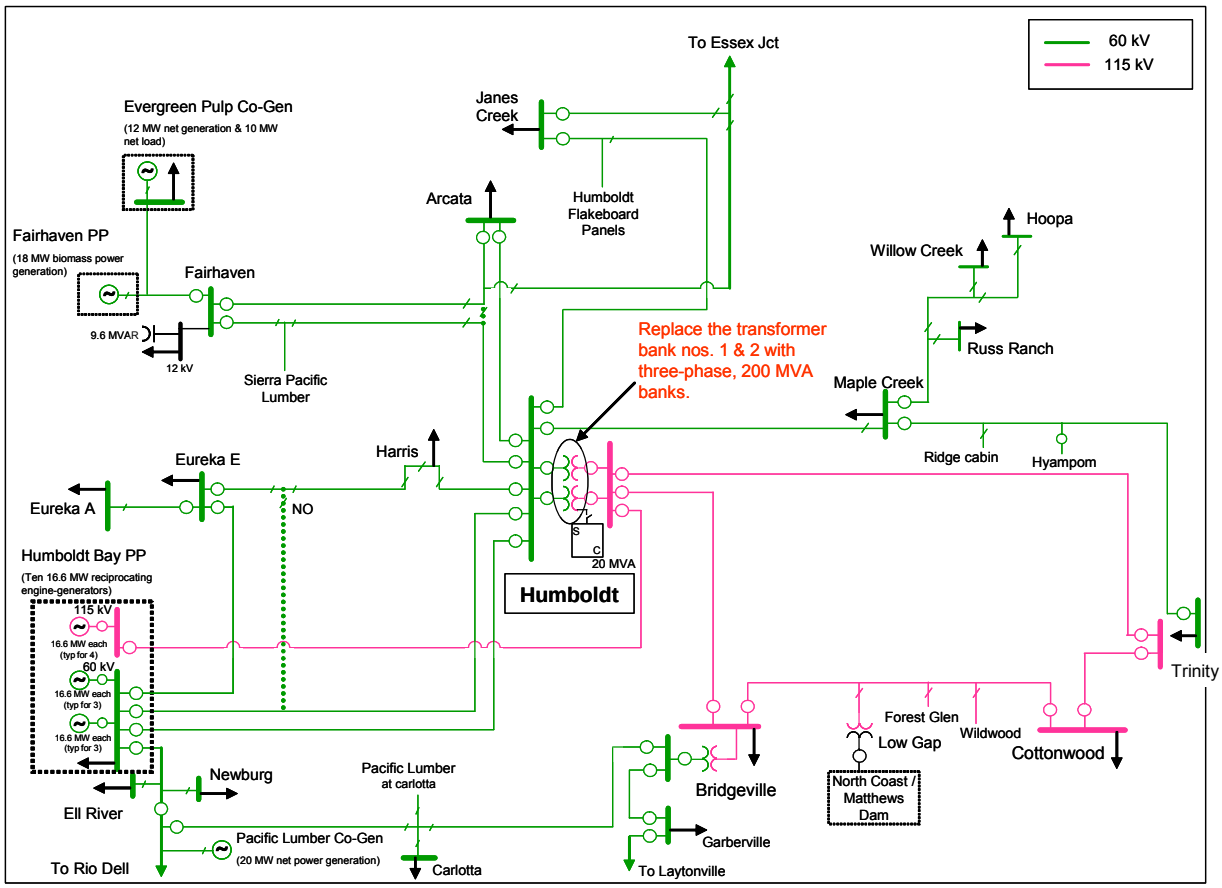

Figure 3-49: Scope Diagram

T880B: West Point – Valley Springs 60 kV Line

(Expected In Service Date - December 2012)

PROJECT INFORMATION

The project scope is to reconductor approximately 11 miles of the West Point – Valley Springs 60 kV Line with 795 ACSR conductors or larger.

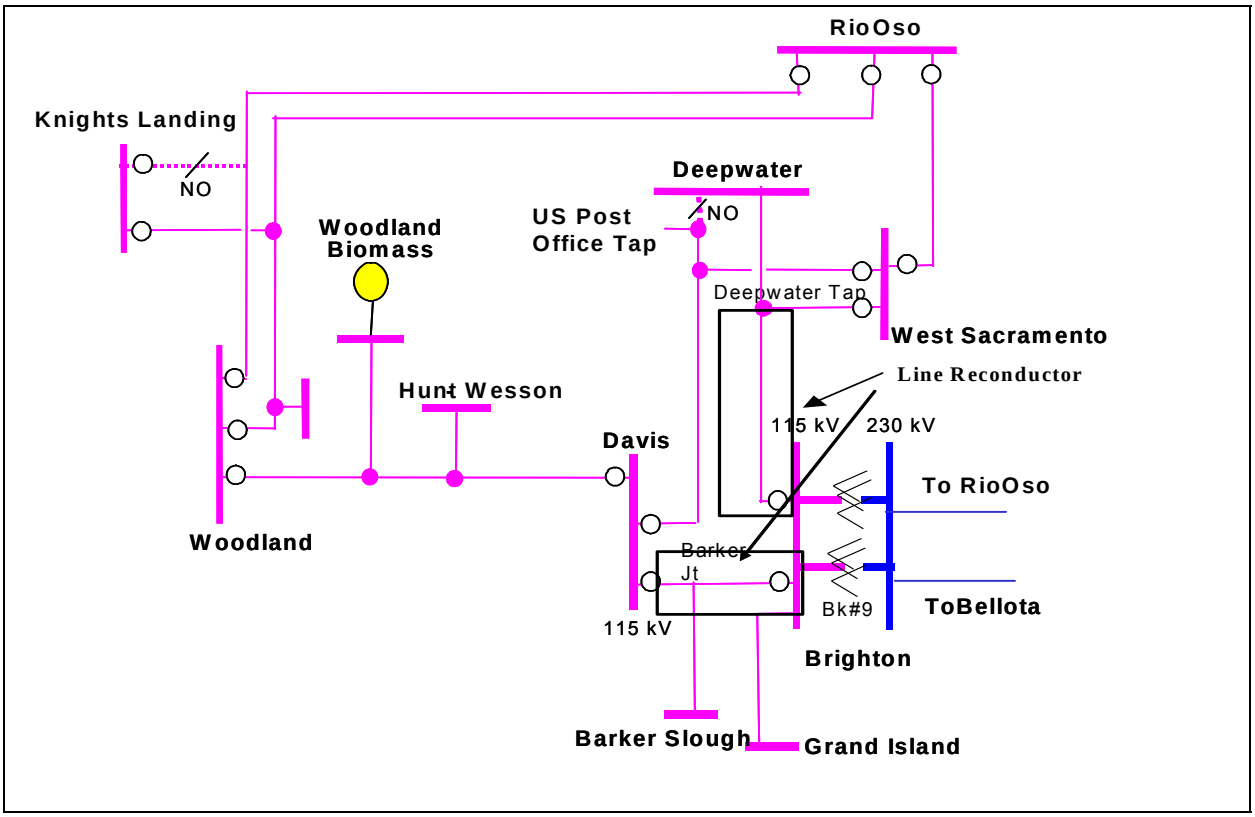

Figure 3-50: Scope Diagram

T854: Metcalf – Evergreen 115 kV

(Expected In Service Date – May 2013)

PROJECT INFORMATION

This project proposes to reconductor the Metcalf – Evergreen 115 kV lines with 477 ACSS conductors.

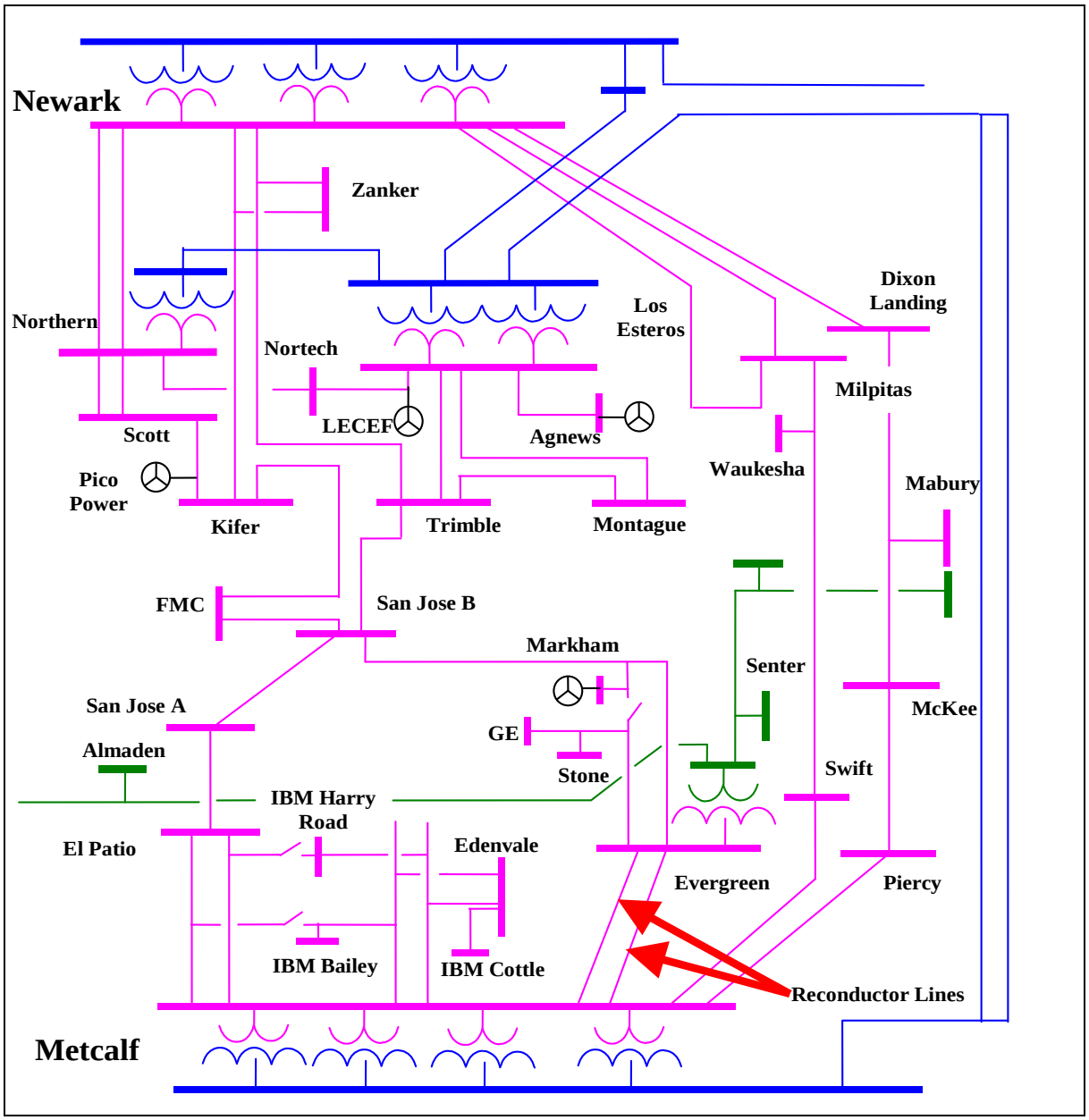

Figure 3-51: Scope Diagram

T985B: Rio Oso 230/115 kV Transformer Upgrades

(Expected In Service Date: May 2013)

PROJECT INFORMATION

The project scope is to replace the Rio Oso 230/115 kV transformers (Nos. 1 and 2) with three-phase, 420 MVA rated, transformer units.

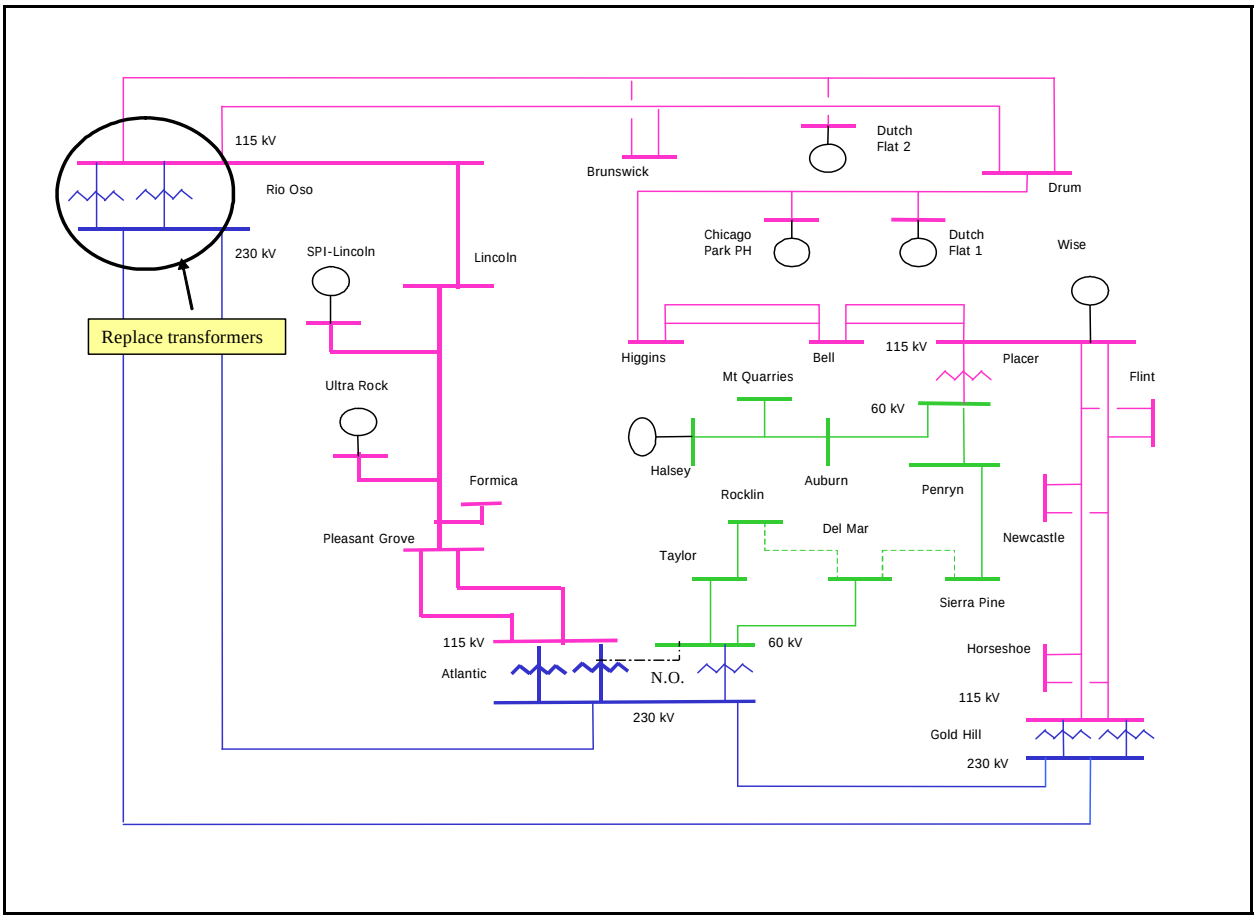

Figure 3-52: Scope Diagram

T1177: Natividad Substation Installation

(Expected In Service Date May 2013)

PROJECT INFORMATION

The project scope is to interconnect a new distribution (Natividad) substation in the north Salinas area at the location of the Natividad Switches on the Crazy Horse-Salinas-Soledad Nos. 1 and 2 115 kV lines. The 115 kV bus at the Natividad Substation will be configured into a ring-bus. The local 115 kV lines in this area will be reconfigured so that the Crazy Horse-Salinas-Soledad 115 kV No. 1 line supplies Natividad Substation and the Crazy Horse-Salinas-Soledad 115 kV No. 2 line supplies Soledad Substation. The line sections (8.2 miles each for each line) from Crazy Horse to Salinas will also be reconductored with conductors capable of carrying a minimum of 900 Amps under summer normal conditions and 1,100 Amps under summer emergency conditions.

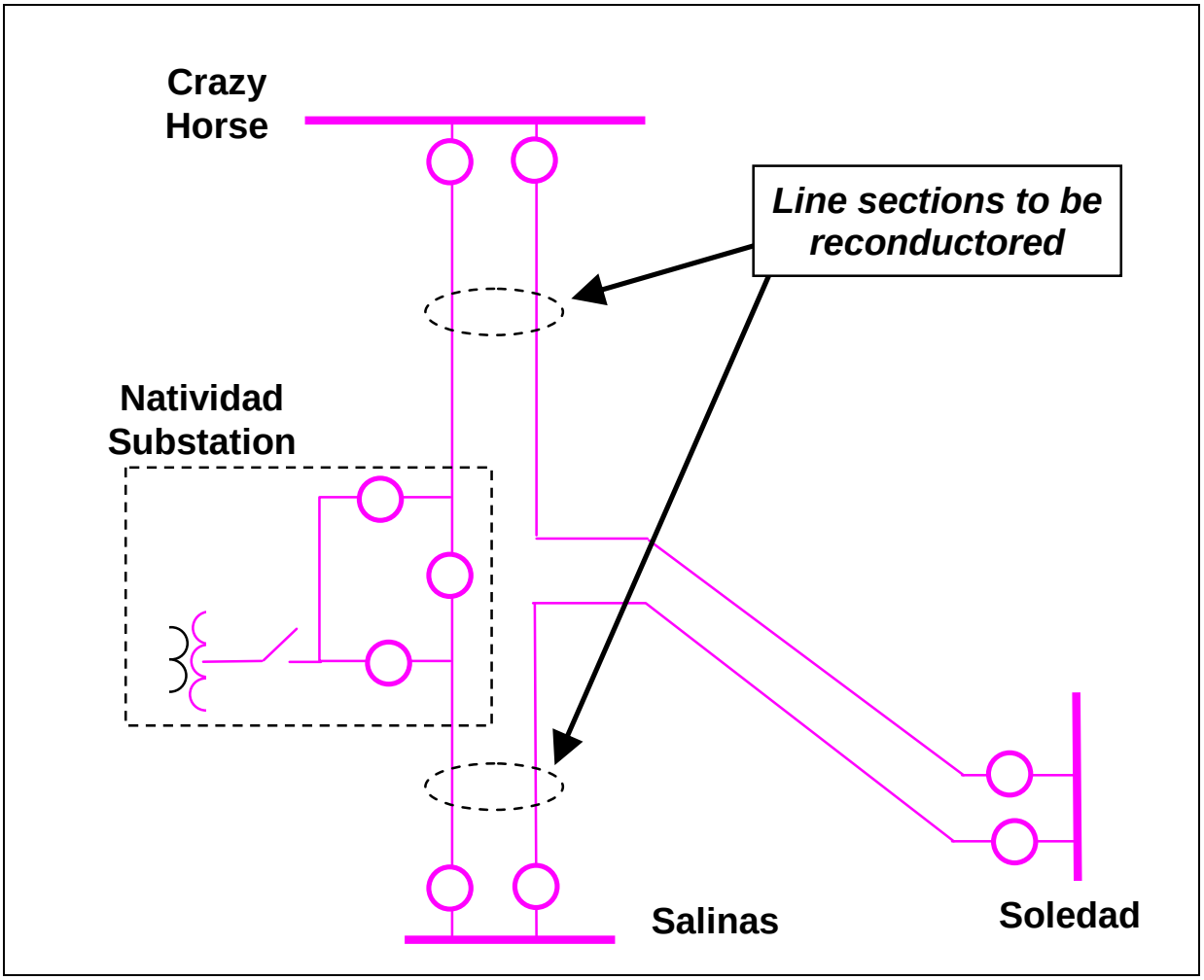

Figure 3-53: Scope Diagram

T1172: Watsonville 60 to 115 kV Voltage Conversion

(Expected In Service Date May 2013)

PROJECT INFORMATION

This project scope is to convert the 60 kV system that serves Watsonville into a 115 kV system. The new system will connect into the Green Valley 115 kV buses (to be converted into a BAAH arrangement) and the Crazy Horse 115 kV buses.

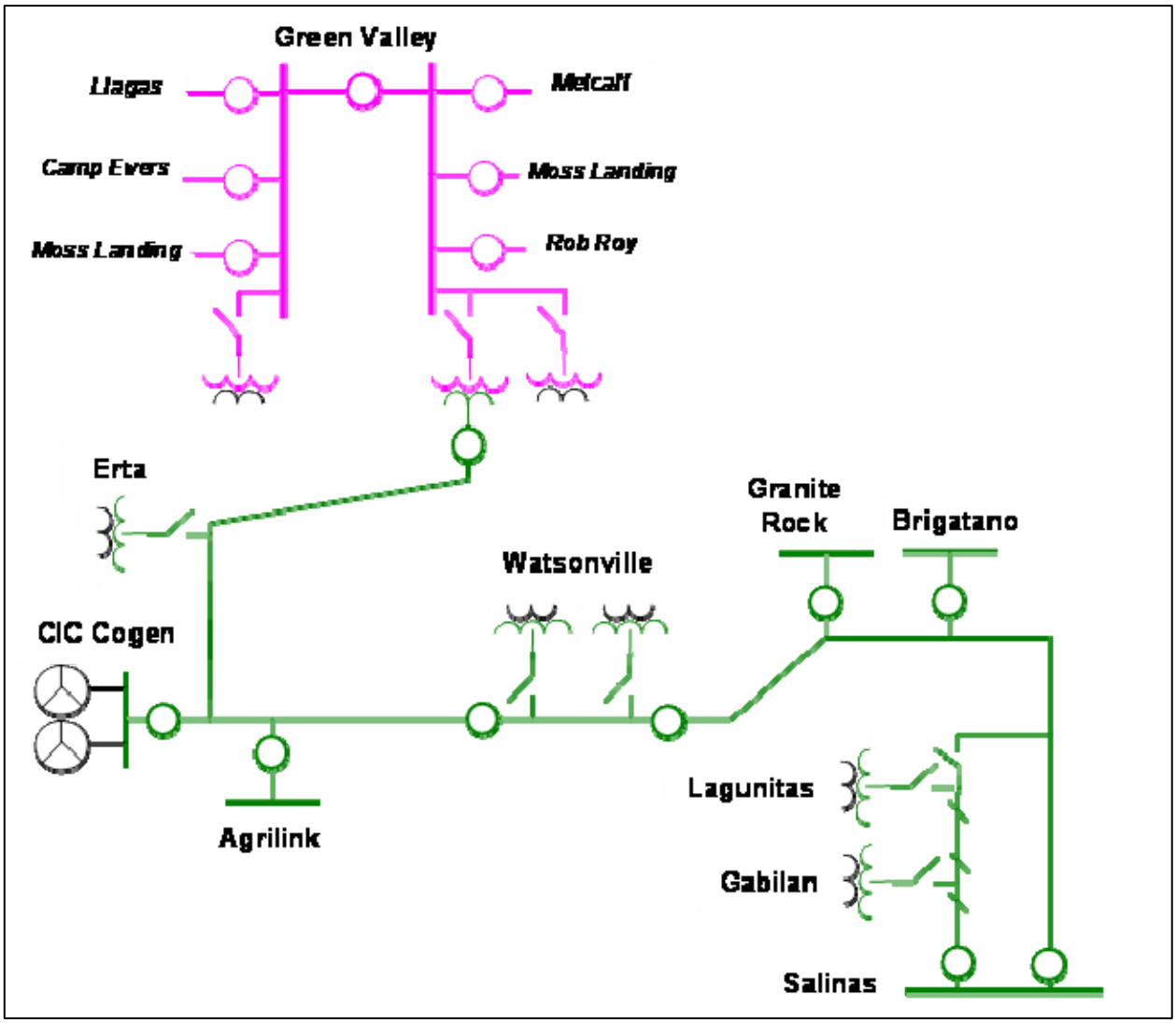

Figure 3-54: Scope Diagram

T1040: Ravenswood – Cooley Landing 115 kV Reconductor

(Expected In Service Date May 2013)

PROJECT INFORMATION

The project scope is to reconductor approximately 3.5 miles of the Ravenswood-Cooley Landing 115 kV Line Nos. 1 and 2 by 2012, with conductors rated to handle a minimum of 1,100 Amps under summer normal and emergency conditions. This alternative provides adequate line capacity for the foreseeable future.

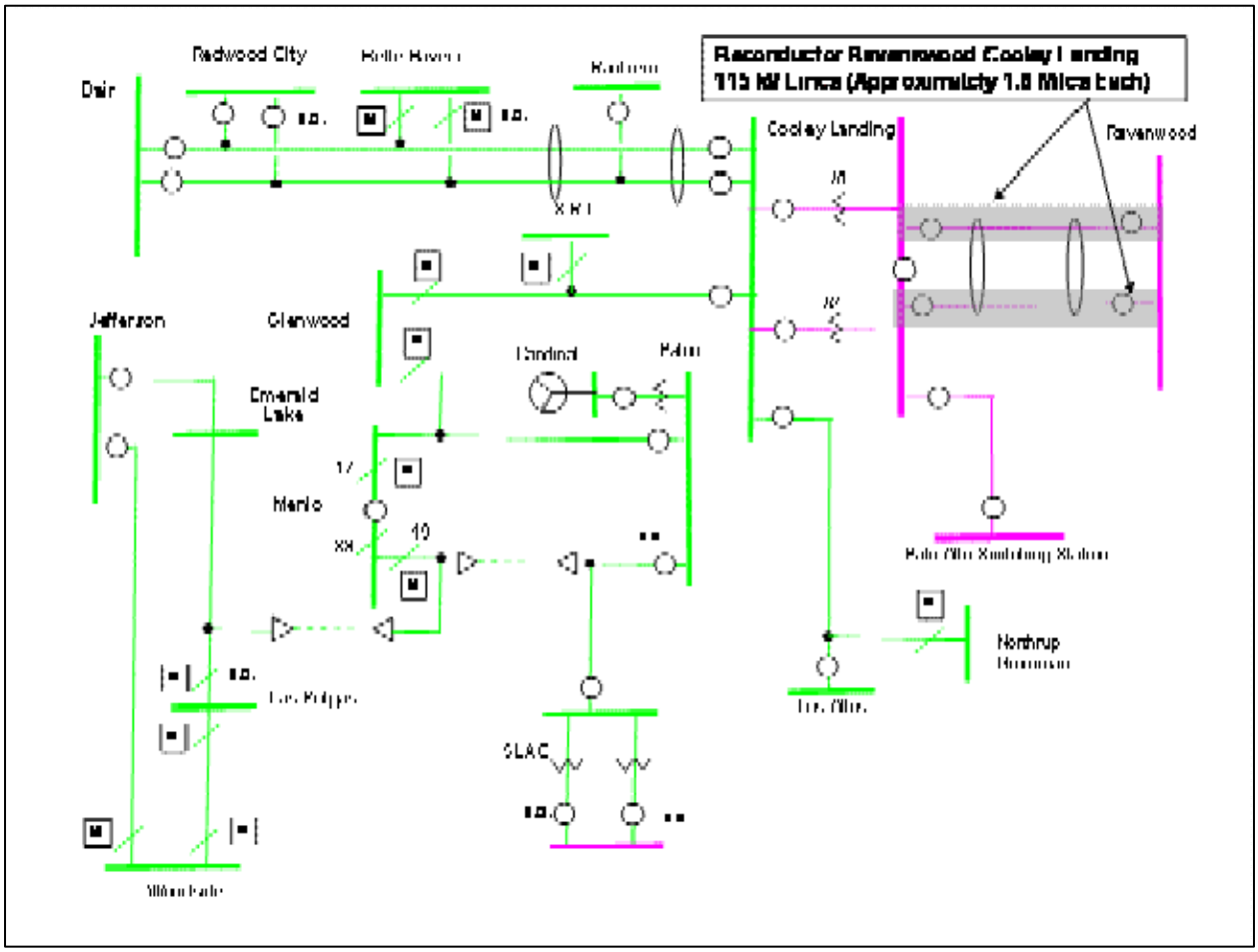

Figure 3-55: Scope Diagram

T1011: Cooley Landing – Los Altos 60 kV Reconductor

(Expected In Service Date May 2013)

PROJECT INFORMATION

The project scope is to reconductor the Cooley Landing-Los Altos (approximately 11 miles) 60 kV line with a conductor rated at 800 Amps or greater. If necessary, the project scope may also include the upgrade of associated line terminal equipment to accommodate the higher rating. In addition, environmental and land permits may be required to complete the reconductoring work.

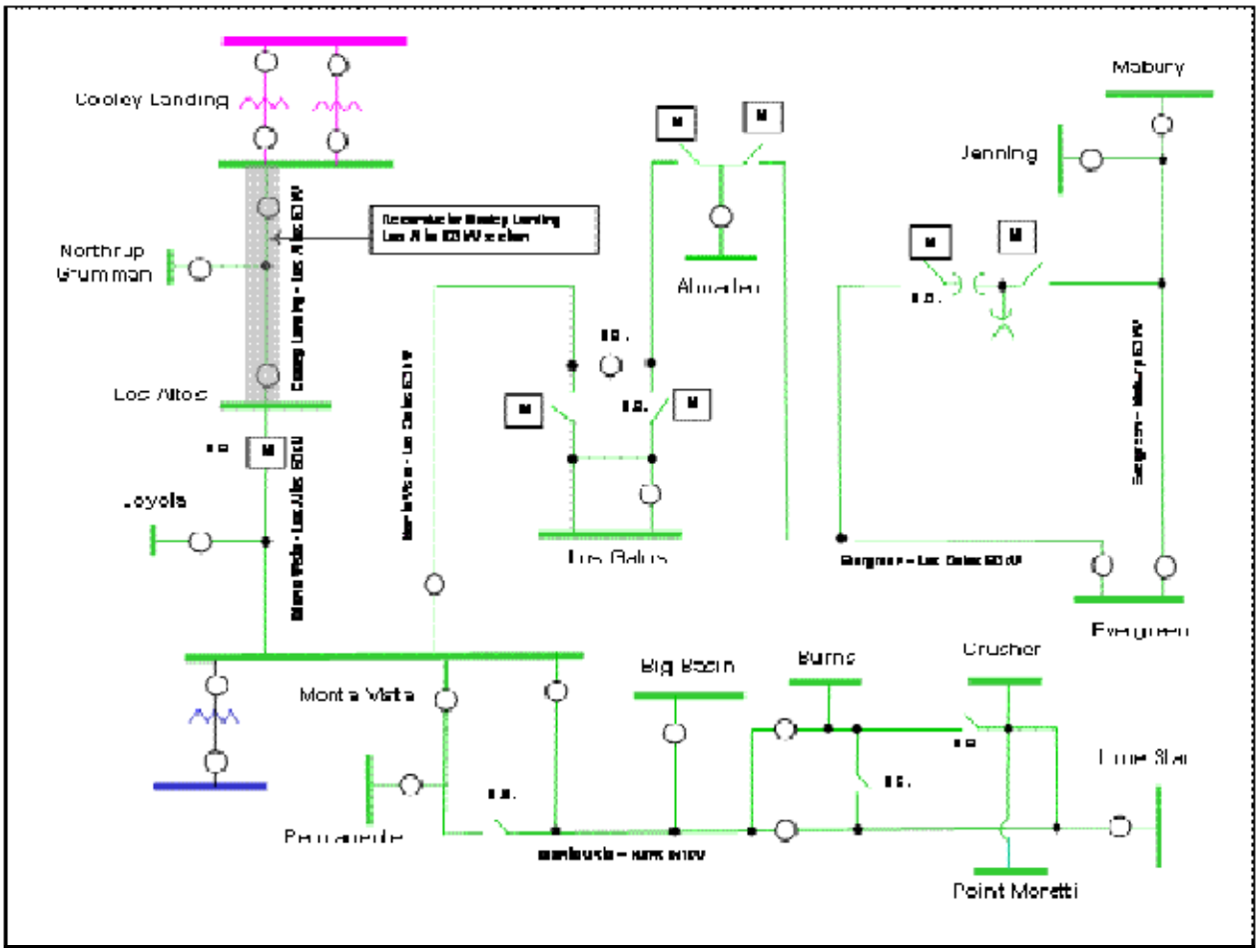

Figure 3-56: Scope Diagram

T346: Cortina 60 kV Reliability

(Expected In Service Date - May 2013)

PROJECT INFORMATION

The project scope is to install an additional 230/60 kV or 115/60 kV transformer at Cortina Substation.

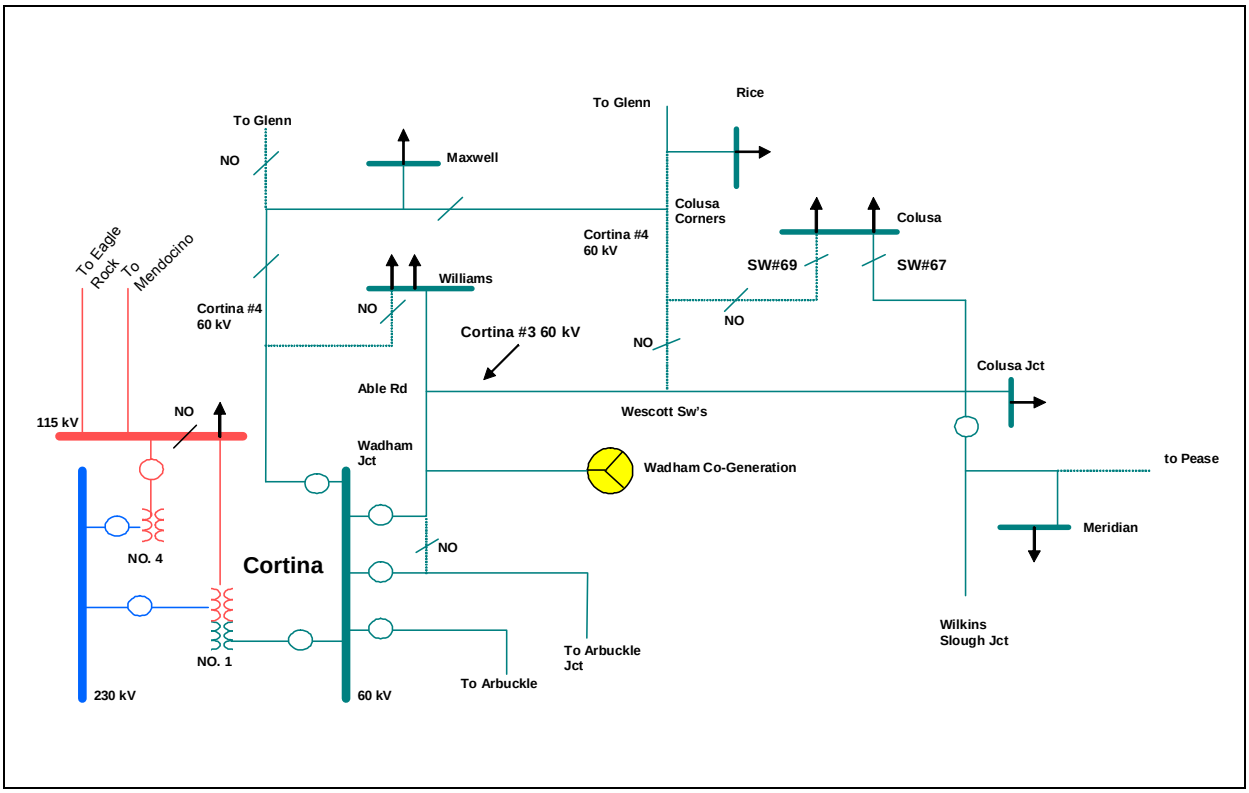

Figure 3-57: Scope Diagram

T670A: Tesla – Newark 230 kV Path Upgrade

(Expected In Service Date May 2013)

PROJECT INFORMATION

The project scope is to reconductor the limiting sections of the Tesla – Newark 230 kV No. 2 with larger capacity rated conductors. If necessary, associated line terminal equipment would be upgraded. In addition, the project scope would require obtaining any necessary environmental and land permits to complete the reconductoring work.

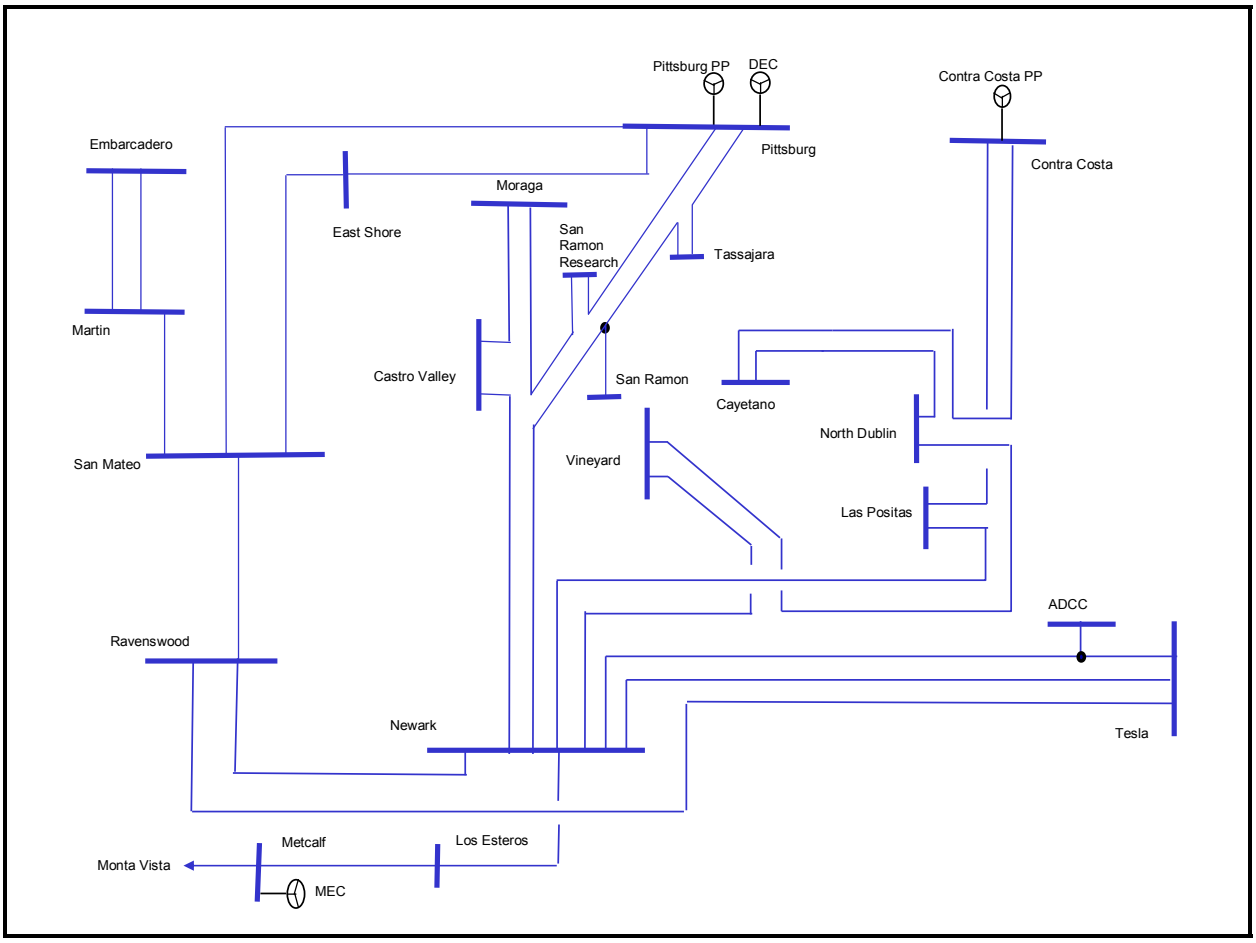

Figure 3-58: Scope Diagram

T1128: Caruthers – Kingsburg 70 kV Line Reconductor

(Expected In Service Date –May 2013)

PROJECT INFORMATION

The project scope is to reconductor Camden-Camden Junction, Camden Junction-Caruthers, and Camden Junction-Lemoore Naval Air Station (NAS) 70 kV line sections (approximately 25 miles in length). The new conductor will have a summer normal rating of at least 825 Amps and a summer emergency rating of 975 Amps. In addition, the 2 mile Henrietta-Lemoore NAS 70 kV line section will be double circuited to provide increased reliability. The project scope would also involve upgrading station terminal equipment and obtaining any necessary environmental and land permits to complete the reconductoring work.

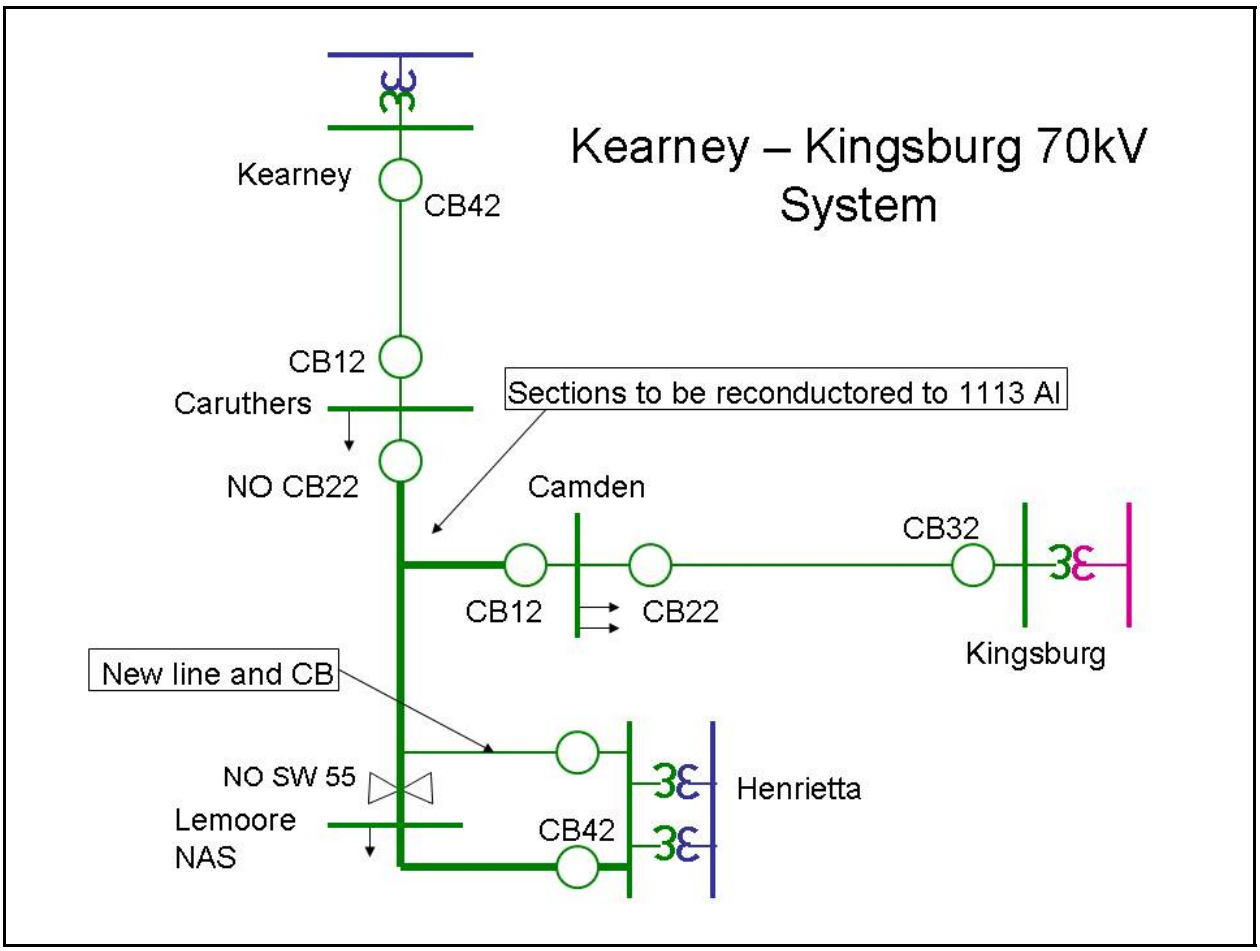

Figure 3-59: Scope Diagram

T1127: Evergreen - Mabury 60 kV to 115 kV Conversion

(Expected In Service Date – May 2013)

PROJECT INFORMATION

The project scope is to convert Mabury Substation to 115 kV and rebuild the Evergreen – Mabury 60 kV line (approximately 6 miles long) into a 115 kV circuit with conductors rated to handle a minimum of 700 Amps under summer normal conditions and a minimum of 800 Amps under summer emergency conditions.

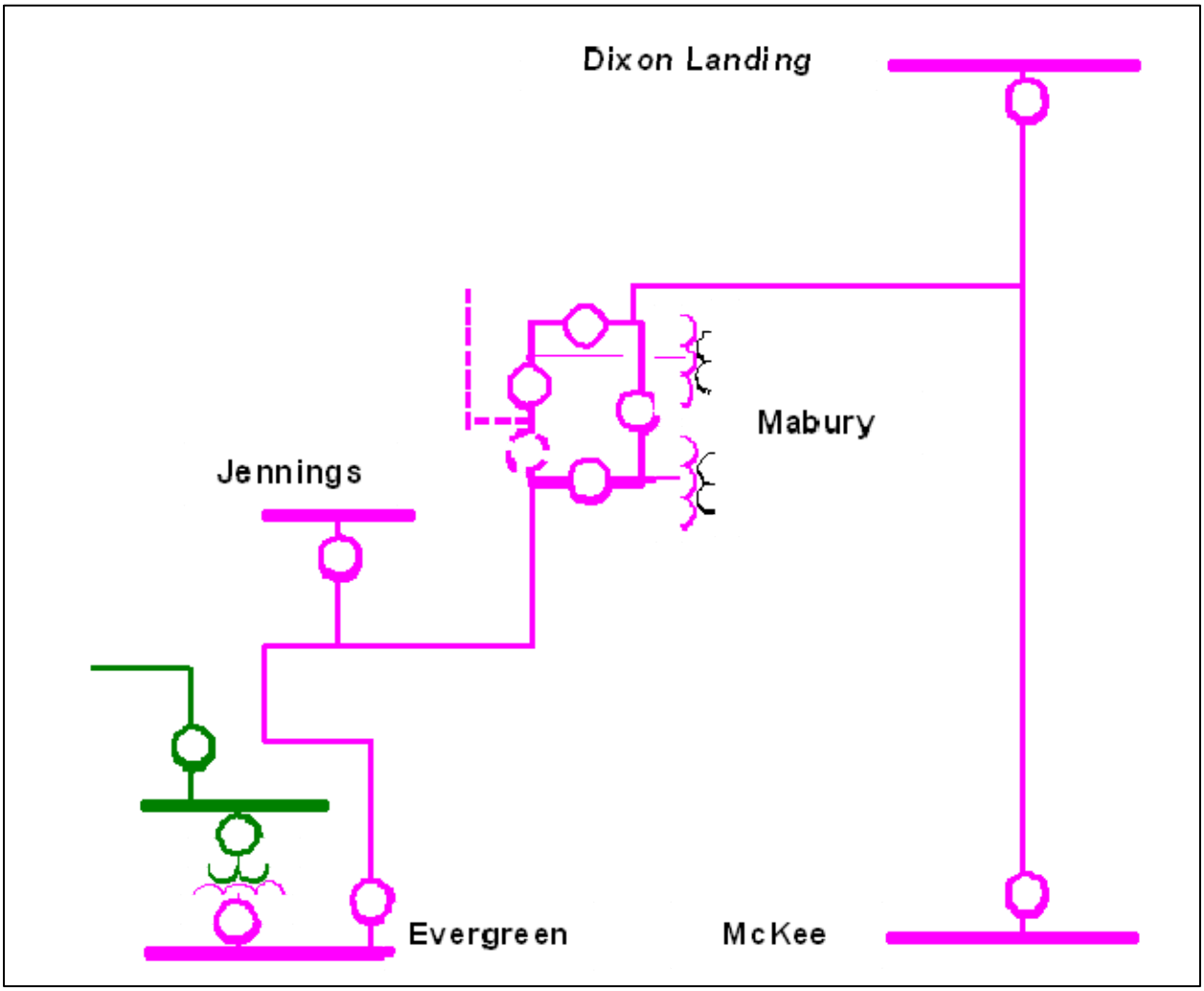

Figure 3-60: Scope Diagram

T1049: Fulton - Fitch Mountain 60 kV Line Reconductor

(Expected In Service Date – May 2013)

PROJECT INFORMATION

The project scope is to reconductor an 8-mile section on the Fulton-Hopland 60 kV Line with a conductor rated to handle a minimum of 631 Amps under summer normal conditions and 742 Amps under summer emergency conditions. If necessary, associated line terminal equipment would be upgraded. In addition, the project scope would require obtaining any necessary environmental and land permits to complete the reconductoring work.

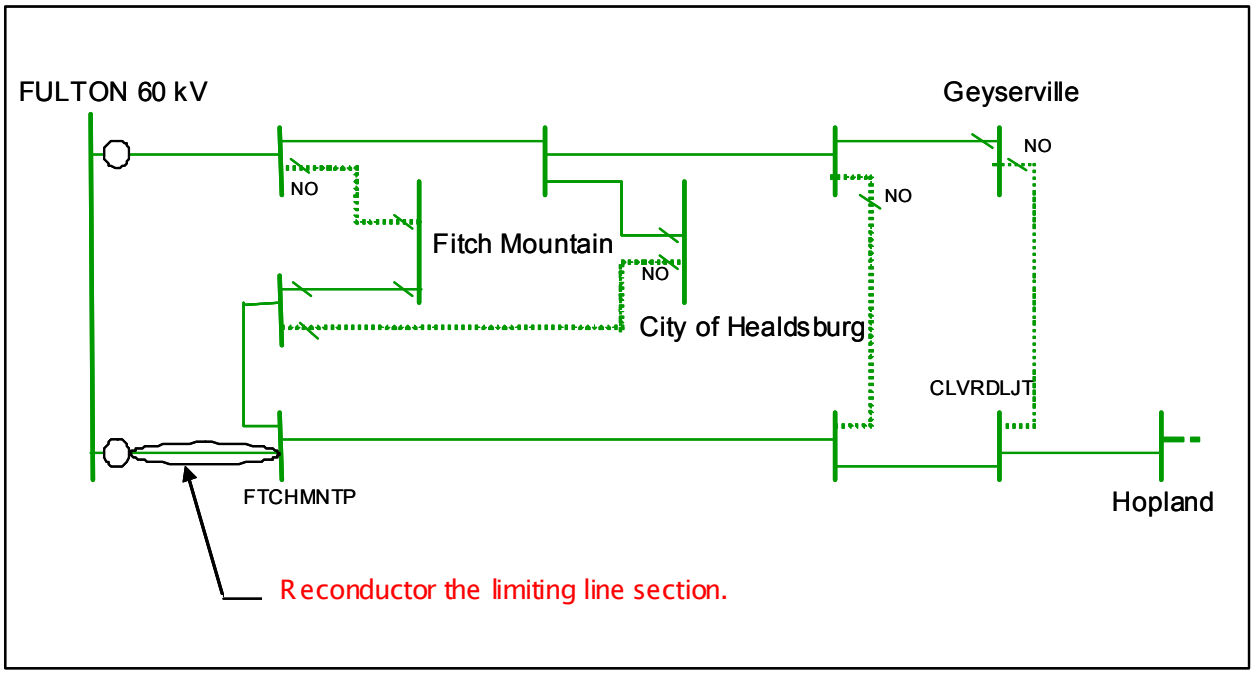

Figure 3-61: Scope Diagram

T970A: Crazy Horse Switching Station

(Expected In Service Date – December 2013)

PROJECT INFORMATION

This project proposes to construct a new 115 kV switching station in the Central Coast Division.

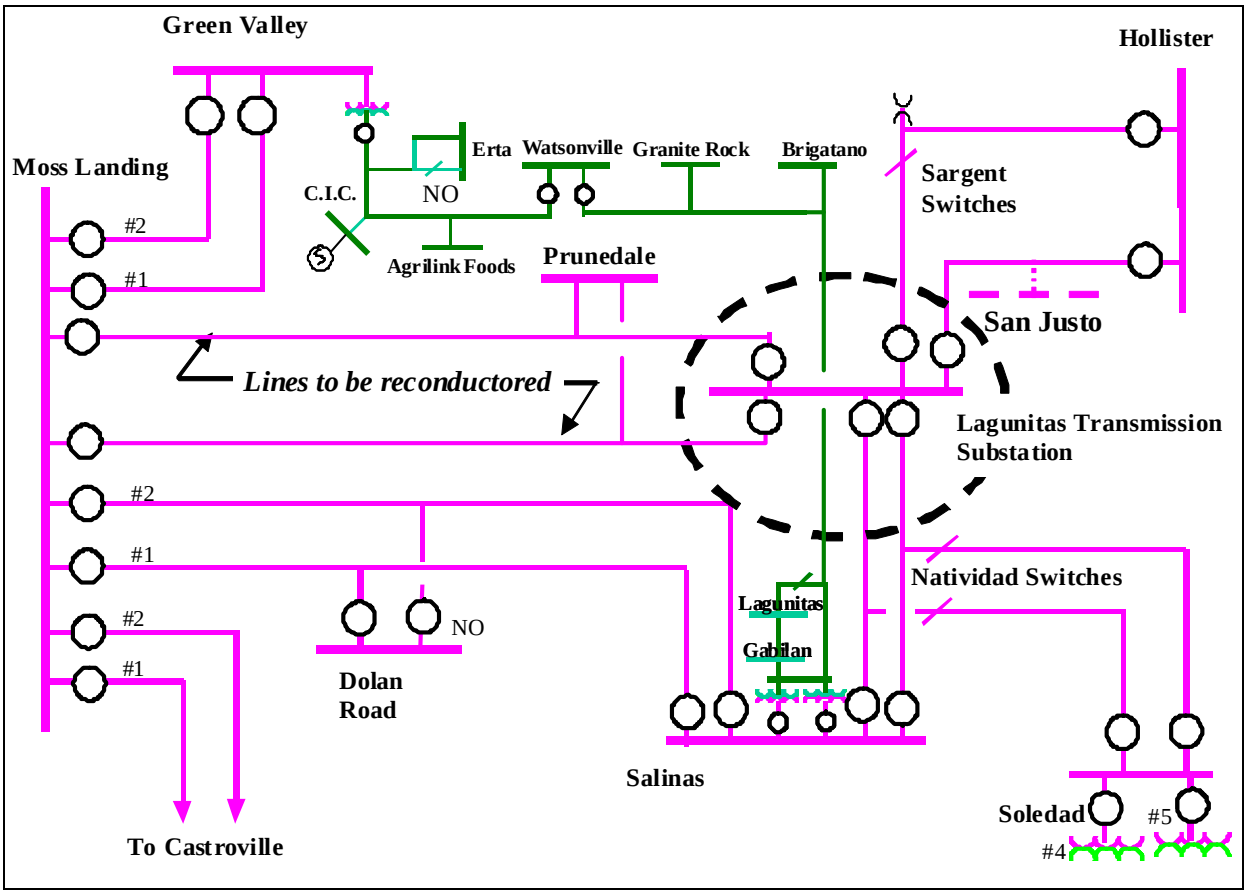

Figure 3-62: Scope Diagram

T991: Contra Costa – Moraga 230 kV Line Reconductoring

(Expected In Service Date –March 2014)

PROJECT INFORMATION

The project proposal is to reconductor the Contra Costa – Moraga 230 kV Line Nos. 1 and 2 (approximately 25 miles) with 954 ACSS conductors or equivalent.

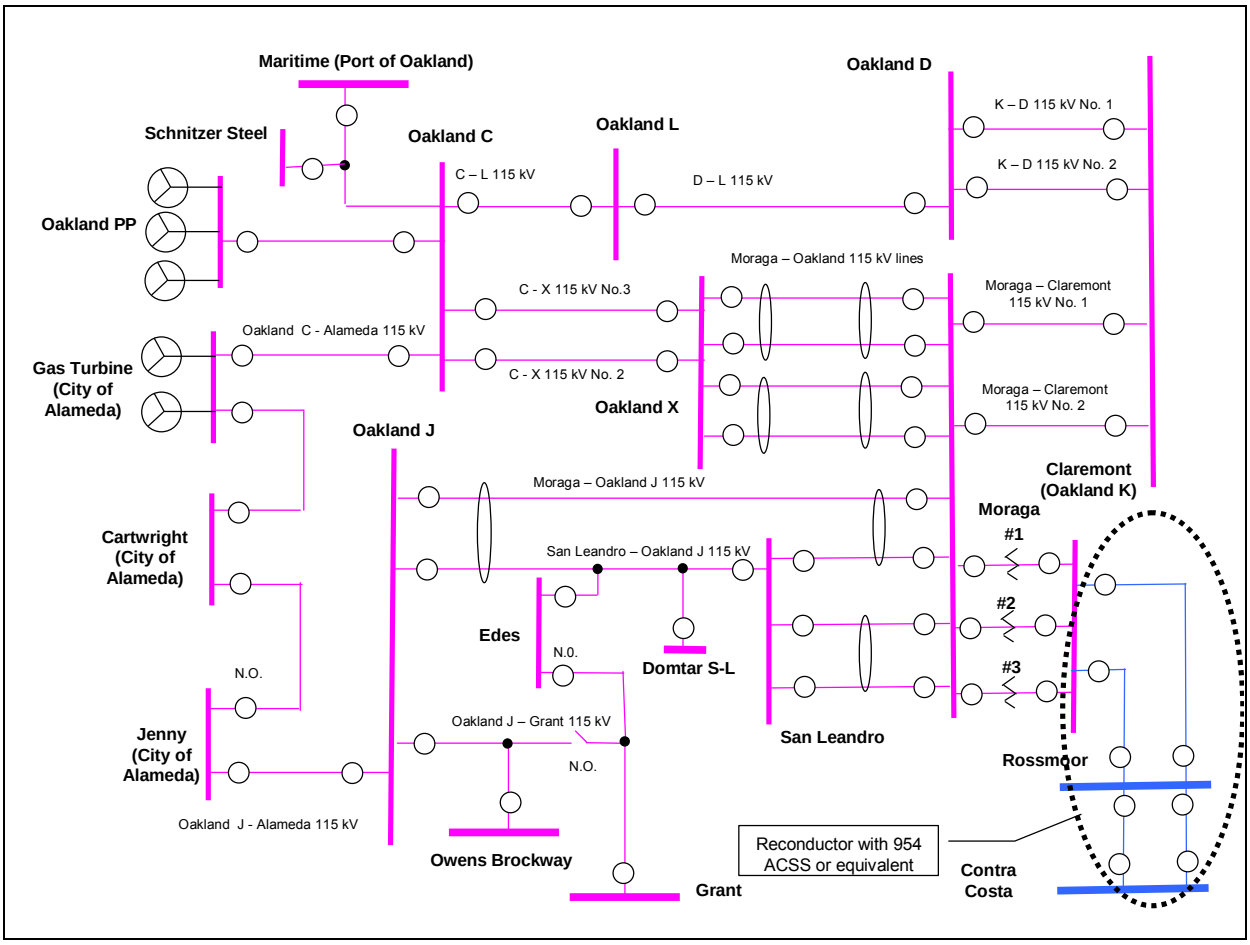

Figure 3-63: Scope Diagram

T984: Pittsburg – Tesla 230 kV Reconductoring

(Expected In Service Date –March 2014)

PROJECT INFORMATION

The project scope is to reconductor the Pittsburg – Tesla 230 kV lines with higher capacity rated conductors sized to handle 1,700 Amps or higher.

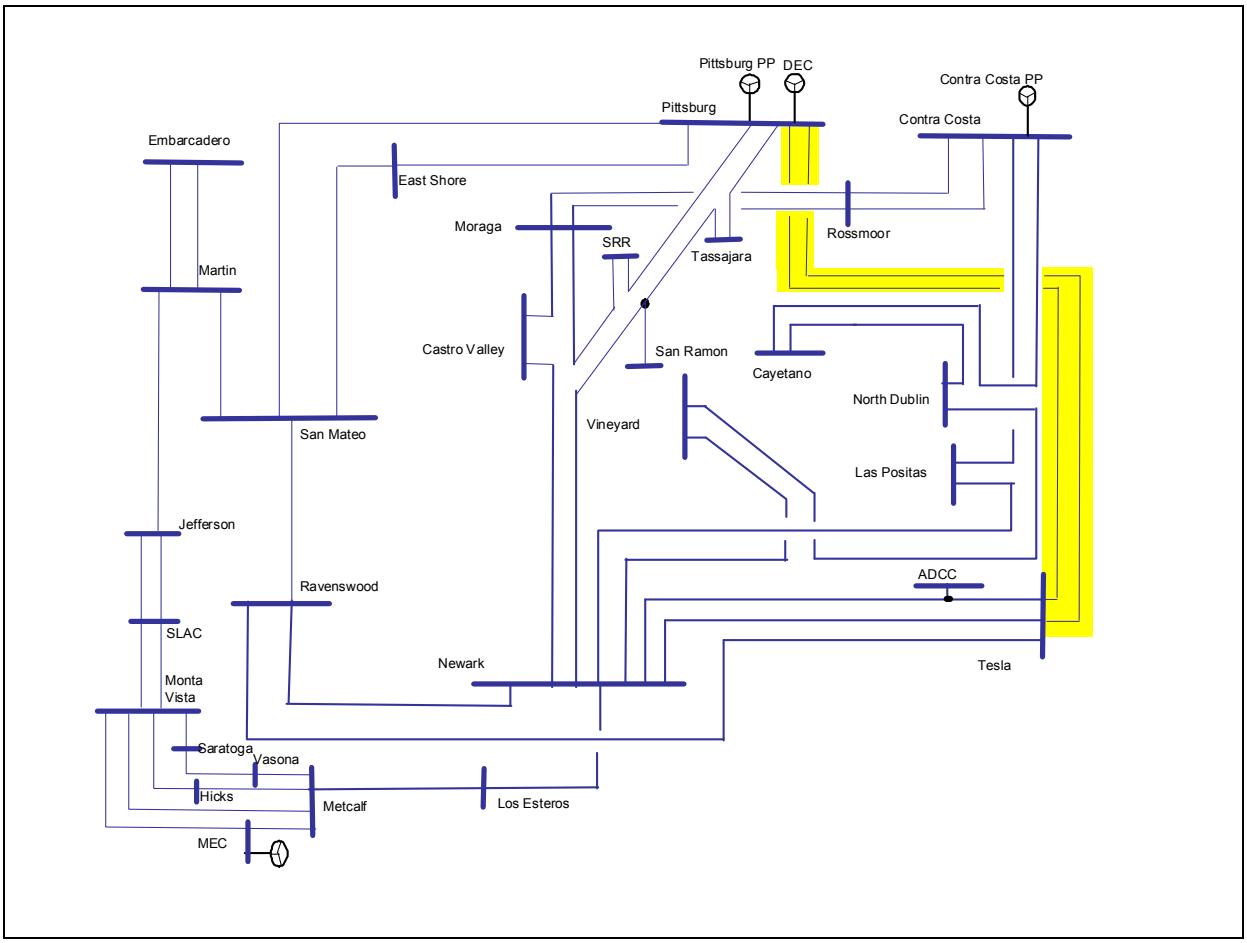

Figure 3-64: Scope Diagram

T197B: Ignacio – San Rafael and Ignacio – Las Gallinas 115 kV Reconductoring

(Expected In Service Date –May 2014)

PROJECT INFORMATION

The project scope is to reconductor the Ignacio – San Rafael 115 kV Nos. 1 and 3 lines with larger capacity rated conductors. If necessary, associated line terminal equipment would be upgraded. In addition, the project scope would require obtaining any necessary environmental and land permits to complete the reconductoring work.

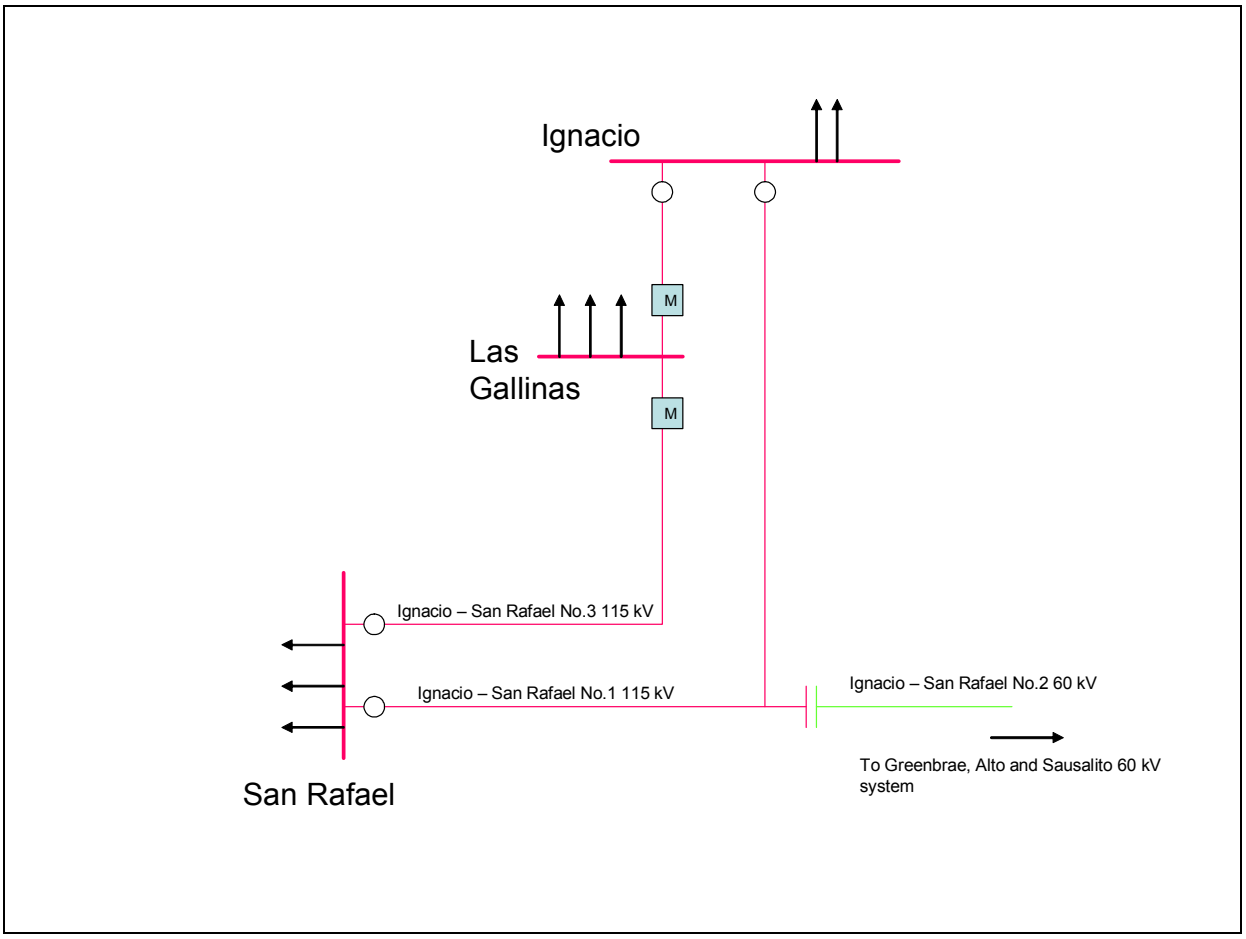

Figure 3-65: Scope Diagram

T603B: Vaca Dixon-Lakeville 230 kV Reconductoring

(Expected In Service Date - May 2014)

PROJECT INFORMATION

This project proposes to reconductor the Vaca-Lakeville and Tulucay-Vaca 230 kV Lines with a higher capacity conductor.

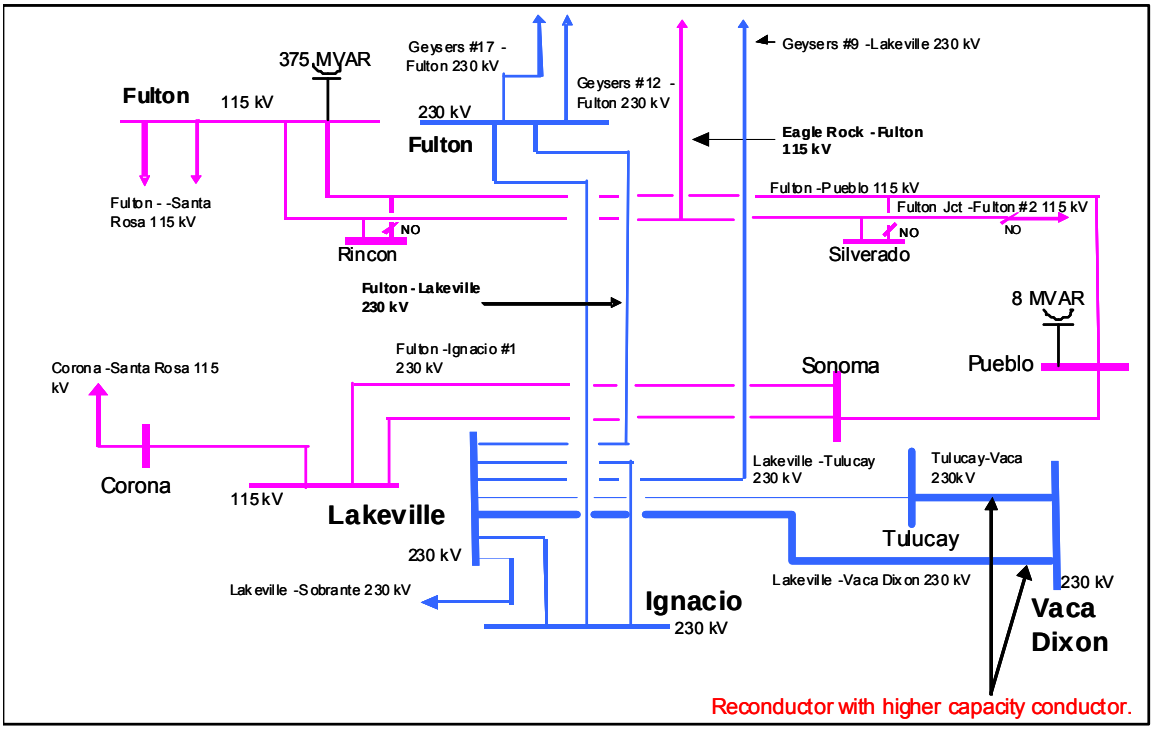

Figure 3-66: Scope Diagram

T982: Newark – Ravenswood 230 kV Line

(Expected In Service Date – May 2014)

PROJECT INFORMATION

The project scope is to reconductor the Newark-Ravenswood 230 kV Line (approximately 9 miles) and a section of the Tesla-Ravenswood 230 kV Line (approximately 9 miles), with a conductor having an emergency loading capability of at least 3,000 Amps. In addition, Newark 230 kV Circuit Breaker No. 610 and Ravenswood 230 kV Circuit Breaker No. 222 will be replaced with 3,000 Amp rated circuit breakers.

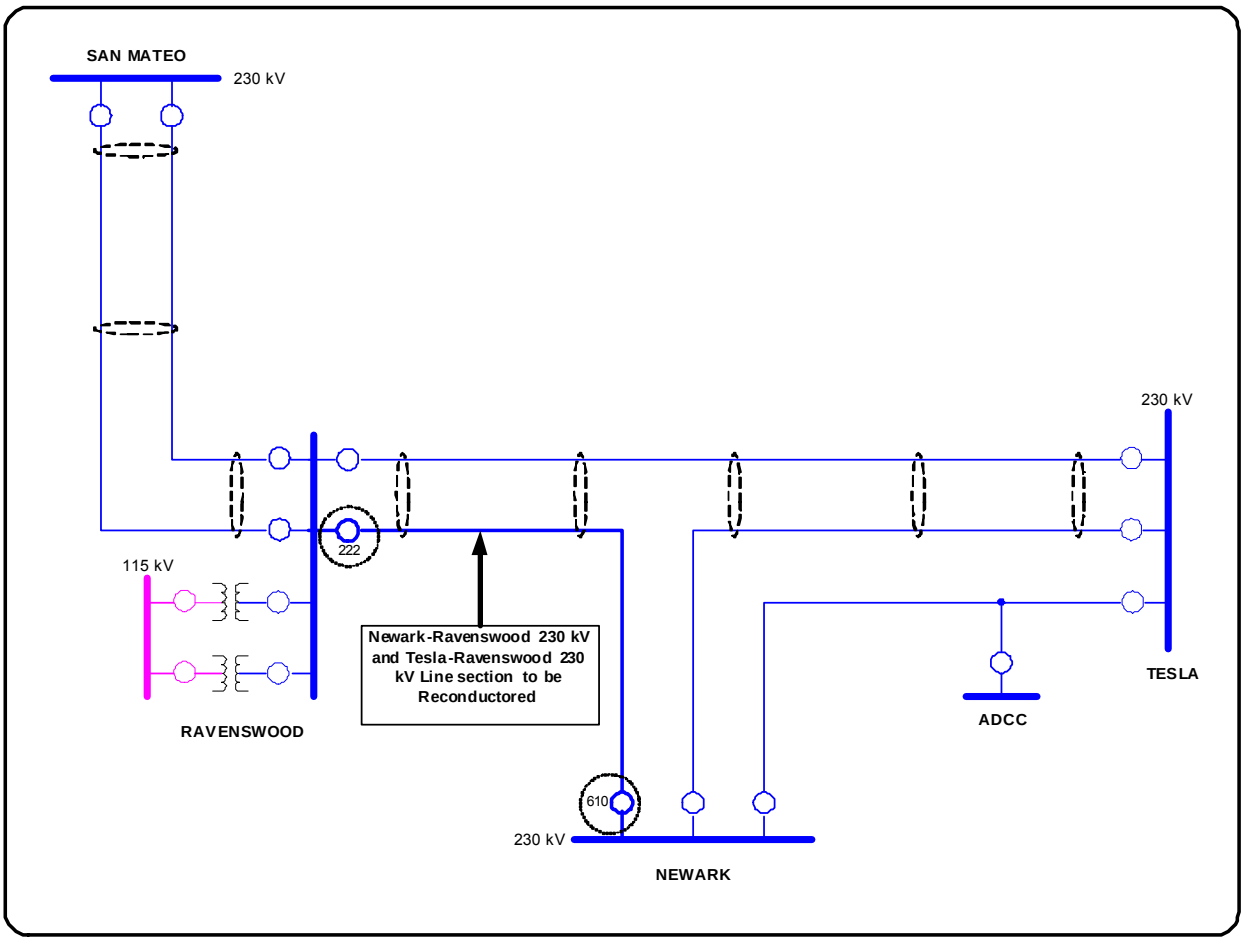

Figure 3-67: Scope Diagram

T999: Pittsburg 230/115 kV Transformer Capacity Increase

(Expected In Service Date - May 2014)

PROJECT INFORMATION

The project scope is to add a third Pittsburg transformer rated at 400 MVA or larger.

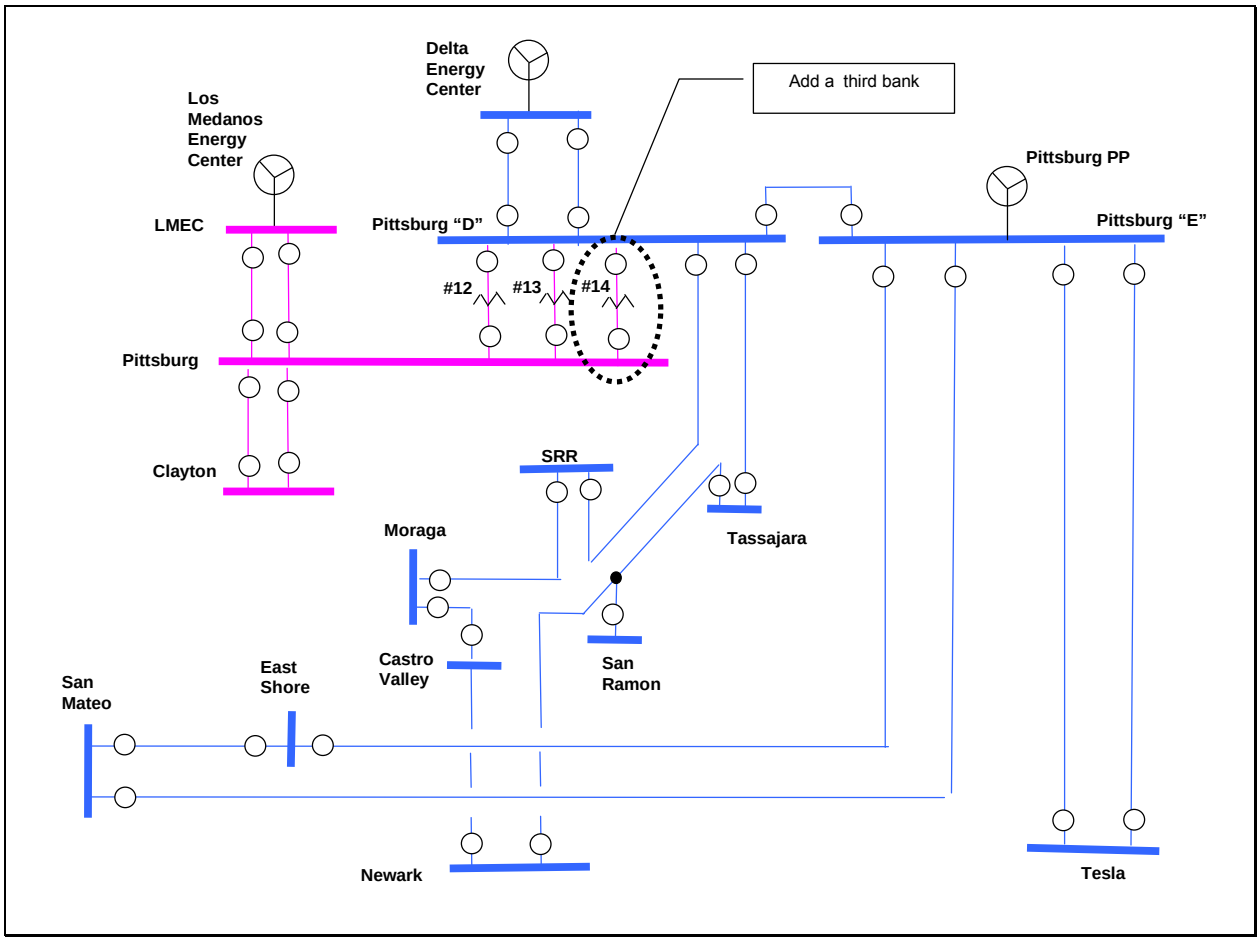

Figure 3-68: Scope Diagram

T920A: South of San Mateo Capacity Increase

(Expected In Service Date - May 2014)

PROJECT INFORMATION

The project scope is to upgrade the transmission facilities between Ames, Ravenswood and San Mateo. The completion of this project would reduce or eliminate the need for the existing automated protection scheme. Project options to be evaluated include upgrading existing and building new transmission facilities.

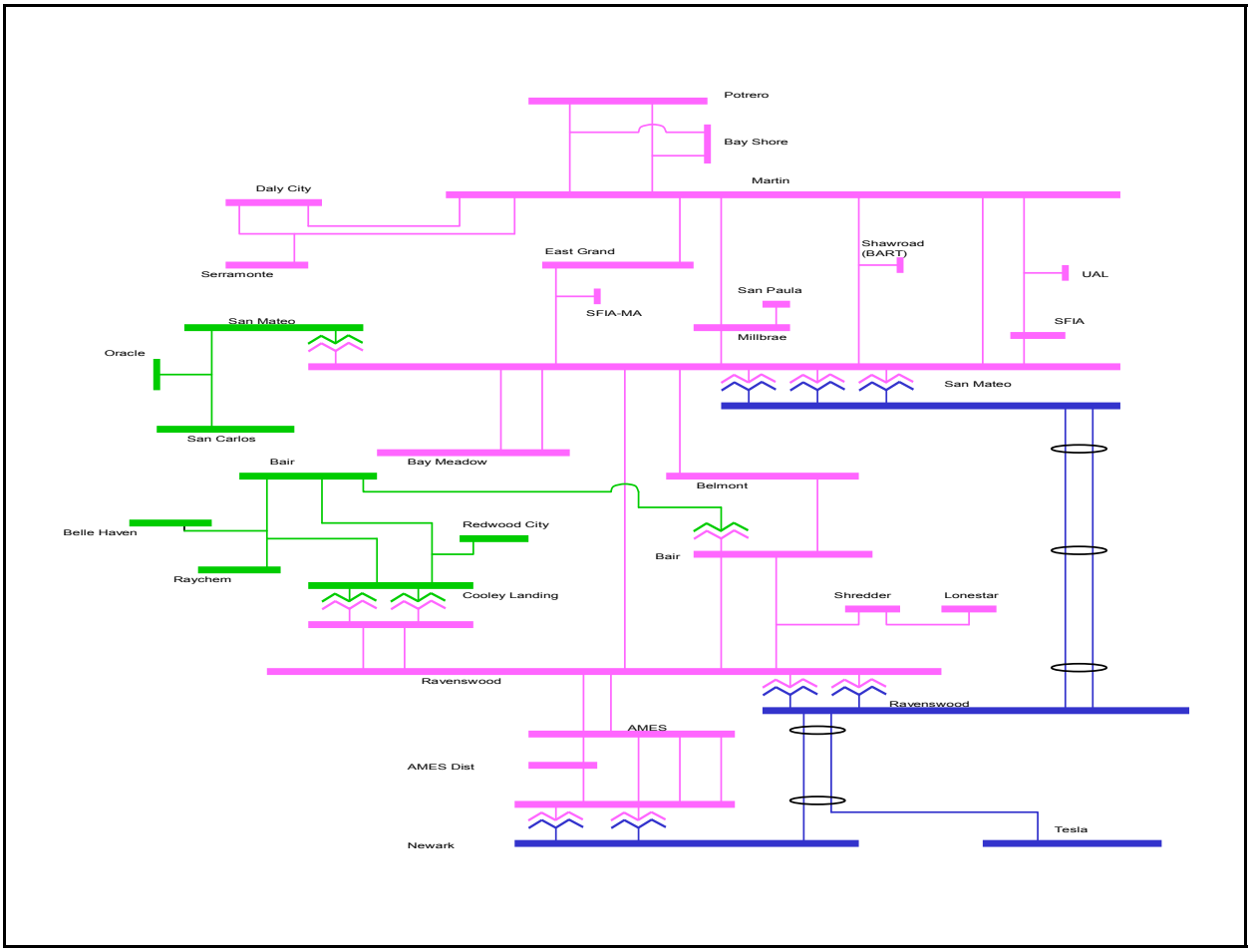

Figure 3-69: Scope Diagram

T1114: San Mateo – Bair 60 kV Line Reconductor

(Expected In Service Date – May 2014)

PROJECT INFORMATION

The project scope is to reconductor the San Mateo-Bair 60 kV line (approximately 11 miles) with a conductor rated to handle a minimum of 1,100 Amps under summer normal and summer emergency conditions. In necessary, the project scope may also include the upgrade of associated line terminal equipment to accommodate the higher rating. In addition, environmental and land permits may be required to complete the reconductoring work.

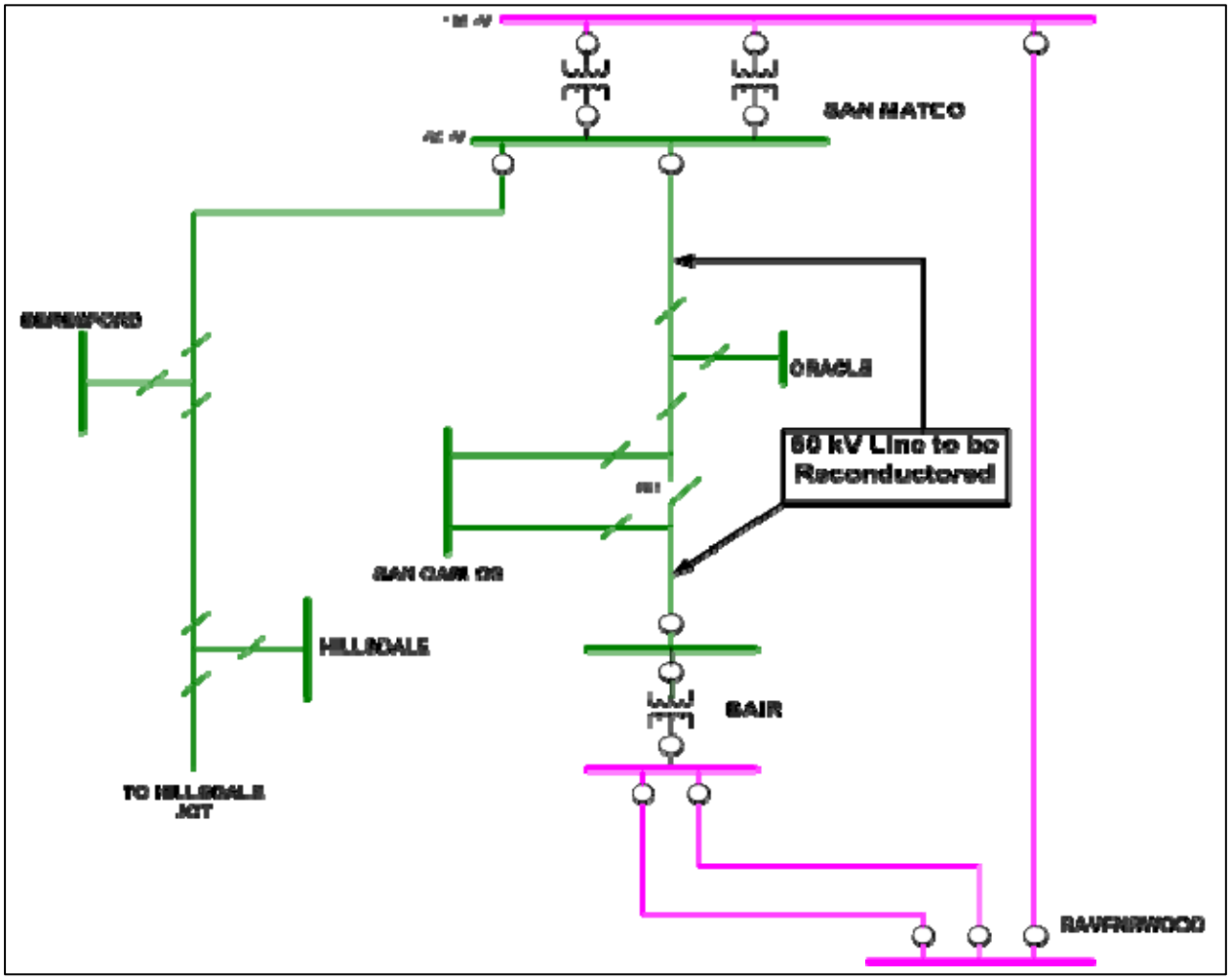

Figure 3-70: Scope Diagram

T692: Metcalf – Piercy & Swift – Metcalf and Newark – Dixon Landing 115 kV Upgrade

(Expected In Service Date – May 2015)

PROJECT INFORMATION

This project proposes to reconductor the Piercy/Swift – Metcalf and Newark – Dixon Landing 115 kV lines with 795 ACSS conductors or equivalent.

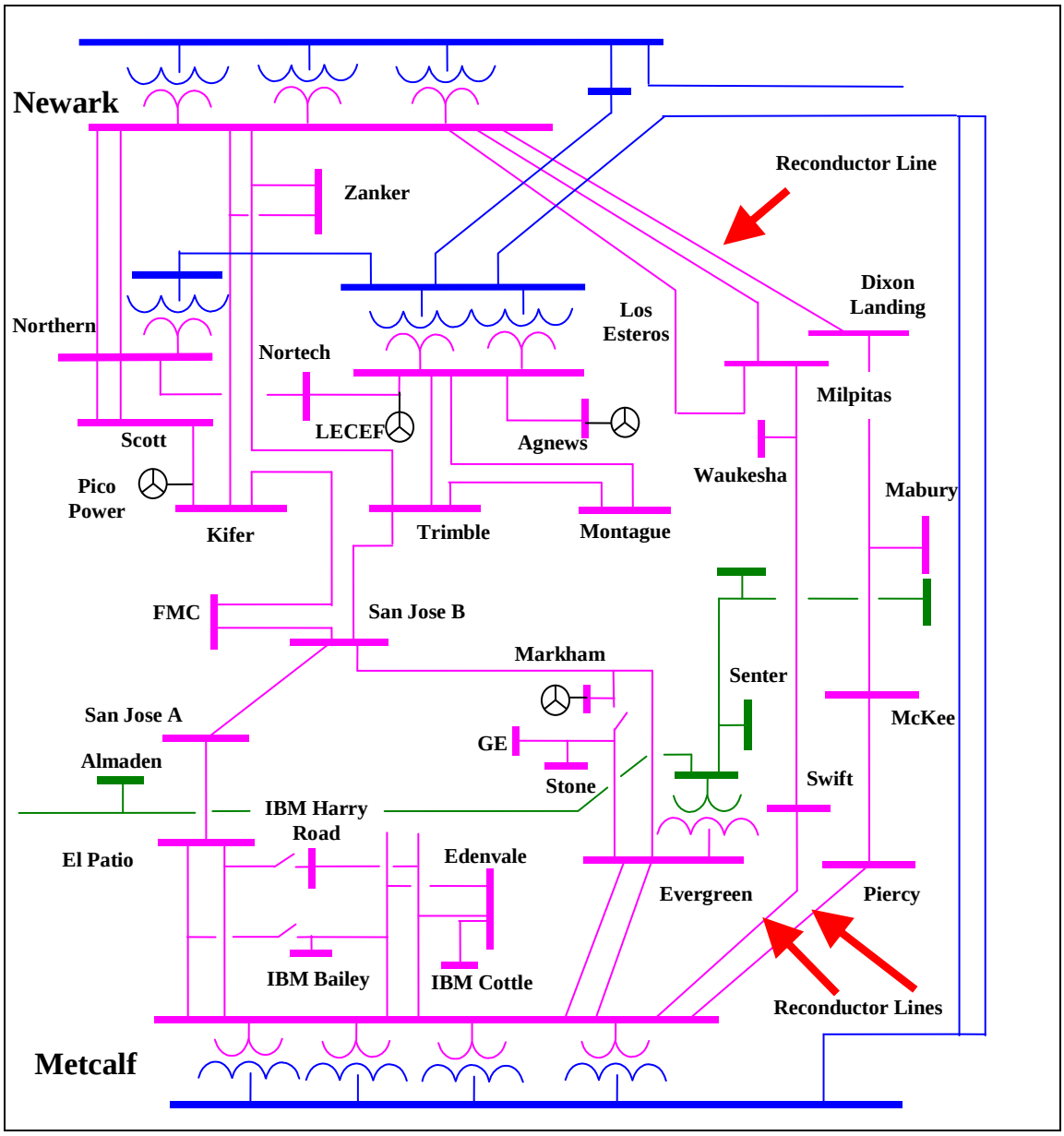

Figure 3-71: Scope Diagram

T1117: Glenn No.1 60 kV Line Reconductor

(Expected In Service Date – May 2015)

PROJECT INFORMATION

The scope is to reconductor the limiting section (5.5 miles) of the Glenn 60 kV Line No.1 between Glenn and Orland B Junction with a larger conductor rated to handle a minimum of 740 Amps under summer emergency conditions.

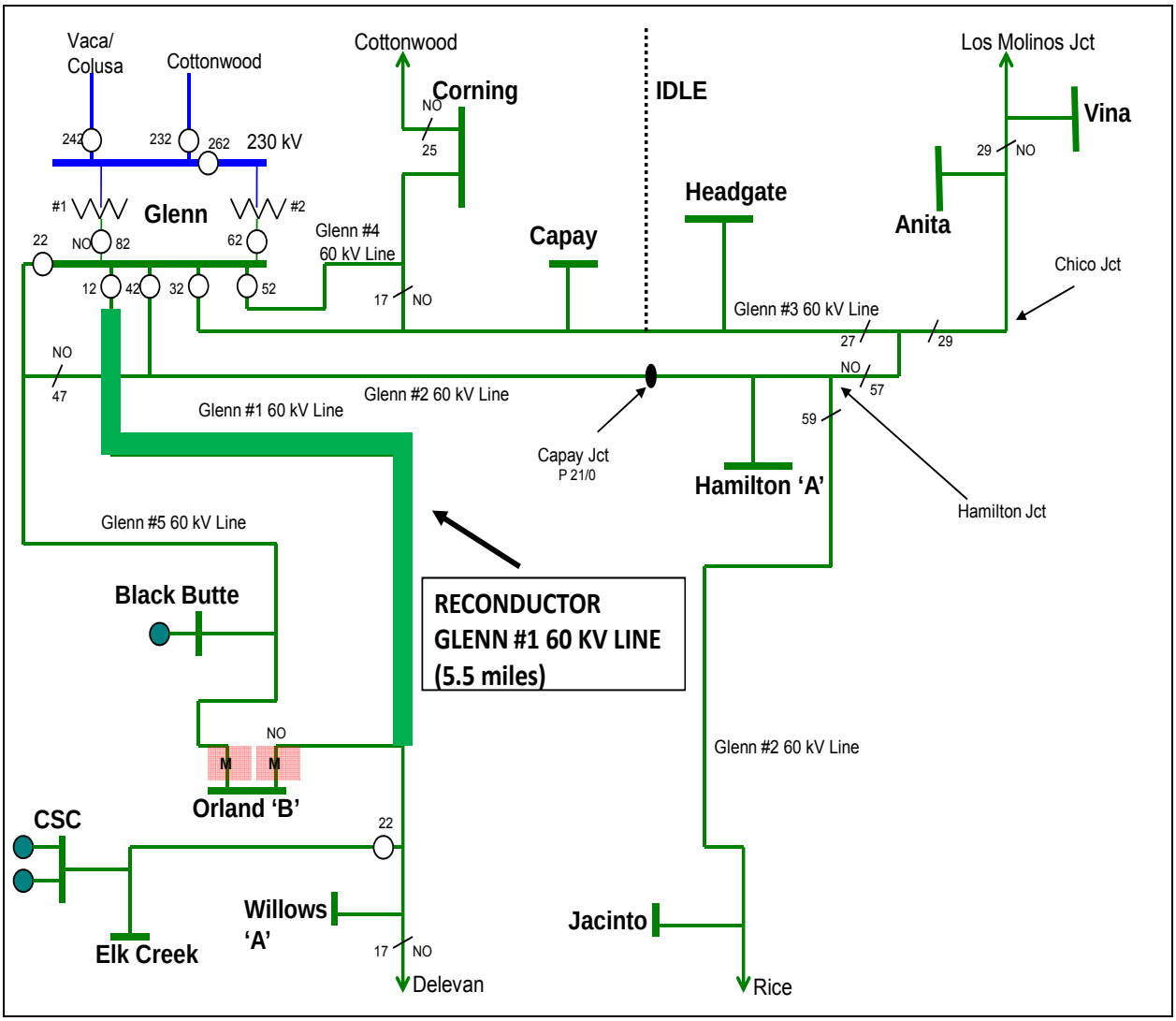

Figure 3-72: Scope Diagram

T678C: Lodi – Industrial 60 kV Line Switch Upgrade

(Expected In Service Date – May 2015)

PROJECT INFORMATION

The project scope is to upgrade the 600 Amp rated switch (No. 29) on the Lodi-Industrial 60 kV Line with a switch rated to handle a minimum of 1,200 Amps.

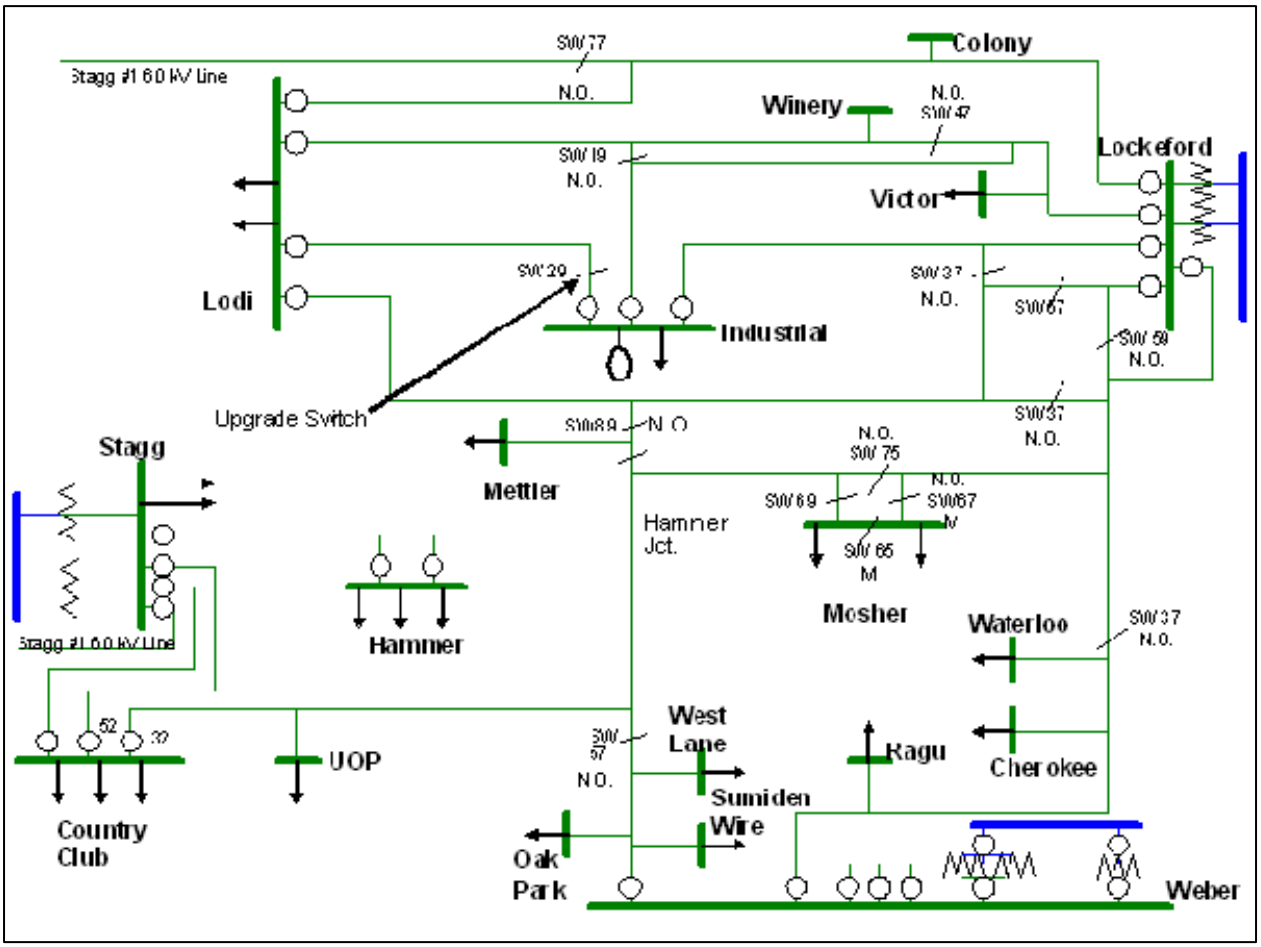

Figure 3-73: Scope Diagram

T1092: Herndon 115 kV Circuit Break Replacement

(Expected In Service Date – December 2015)

PROJECT INFORMATION

The proposed project scope is to replace Herndon circuit breaker (CB) number (No.) 122 with a 2,000 Amp-rated circuit breaker or larger and associated equipment at Herndon Substation. Completion of this project allows the Herndon-Bullard 115 kV No. 2 Line to serve up to 1,517 Amps under summer normal and emergency conditions.

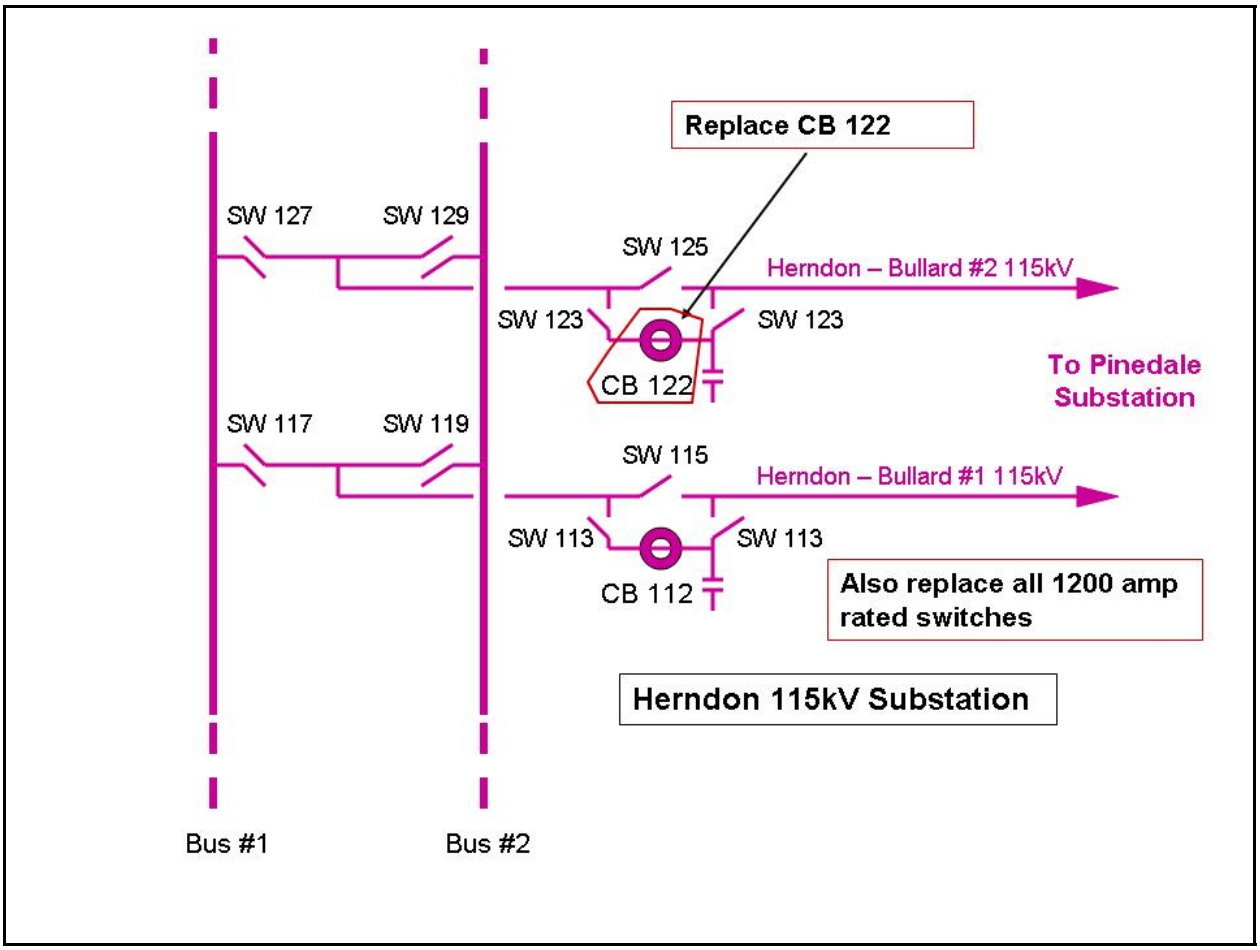

Figure 3-74: Scope Diagram

T1092: Occidental of Elk Hills 230 kV Interconnection

(Expected In Service Date – December 2015)

PROJECT INFORMATION

The project scope to interconnect the new Occidental of Elk Hills' (Oxy) substation involves the removal of existing interconnection service point off of the Midway-Taft 115 kV Line (including metering) and installing the new meter at new customer owned substation

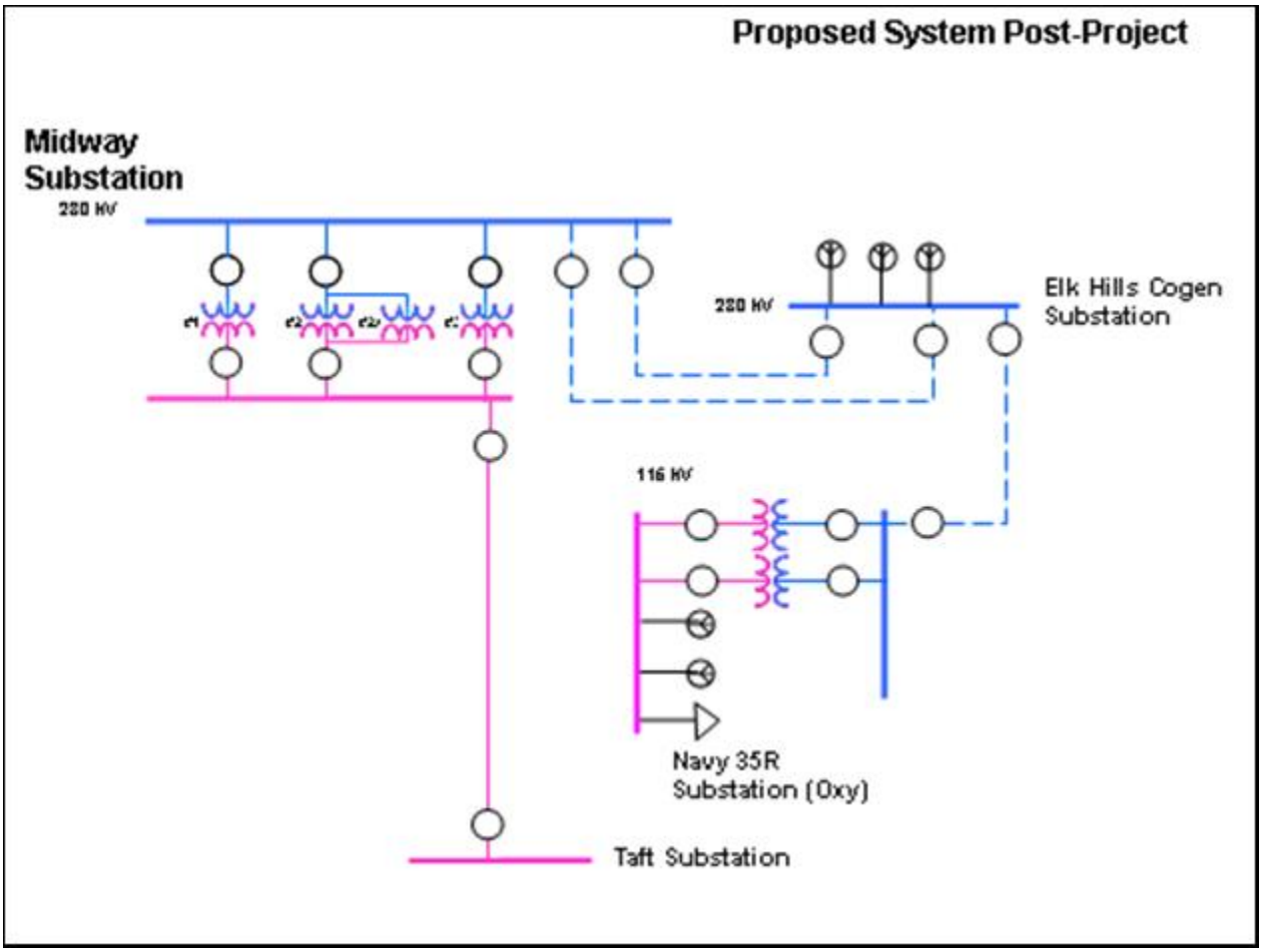

Figure 3-75: Scope Diagram

T986: Woodward 115 kV Reinforcement

(Expected In Service Date May 2016)

PROJECT INFORMATION

This project proposes to reconductor the limiting sections of the Kerckhoff – Clovis – Sanger and the Herndon – Woodward 115 kV lines with larger capacity rated conductors

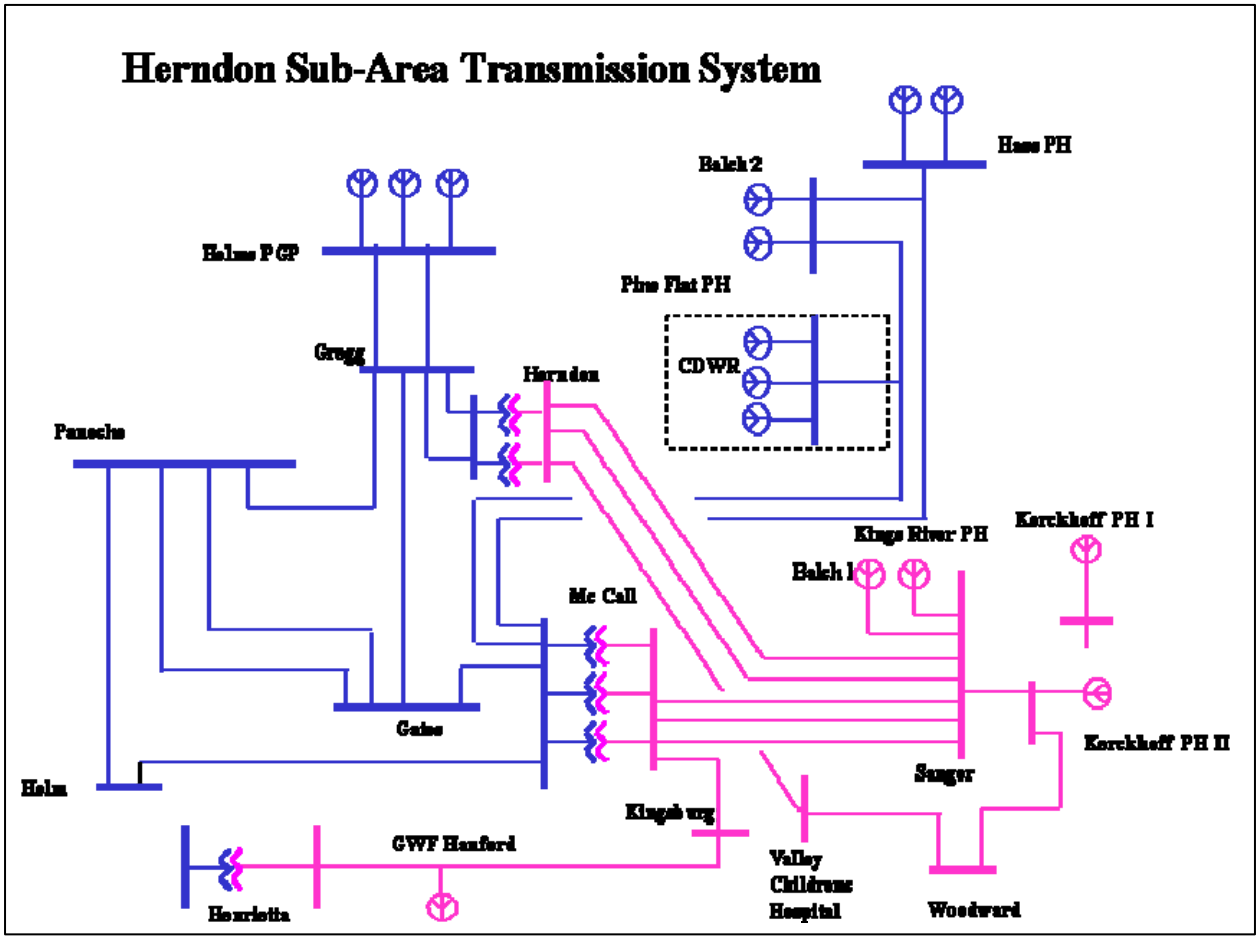

Figure 3-76: Scope Diagram

T1134: Clearlake 60 kV System Reinforcement

(Expected In Service Date May 2016)

PROJECT INFORMATION

This project scope is to build a new 115 kV line, which is approximately 12 miles long, and is capable of carrying a minimum of 297 Amps under summer normal conditions and 345 Amps under summer emergency conditions. This new line will tap into the Eagle Rock-Cortina 115 kV Line and terminate at Middletown Substation. This project scope will also involve installation of a new 100 MVA rated or higher, 115/60 kV transformer at Middletown Substation.

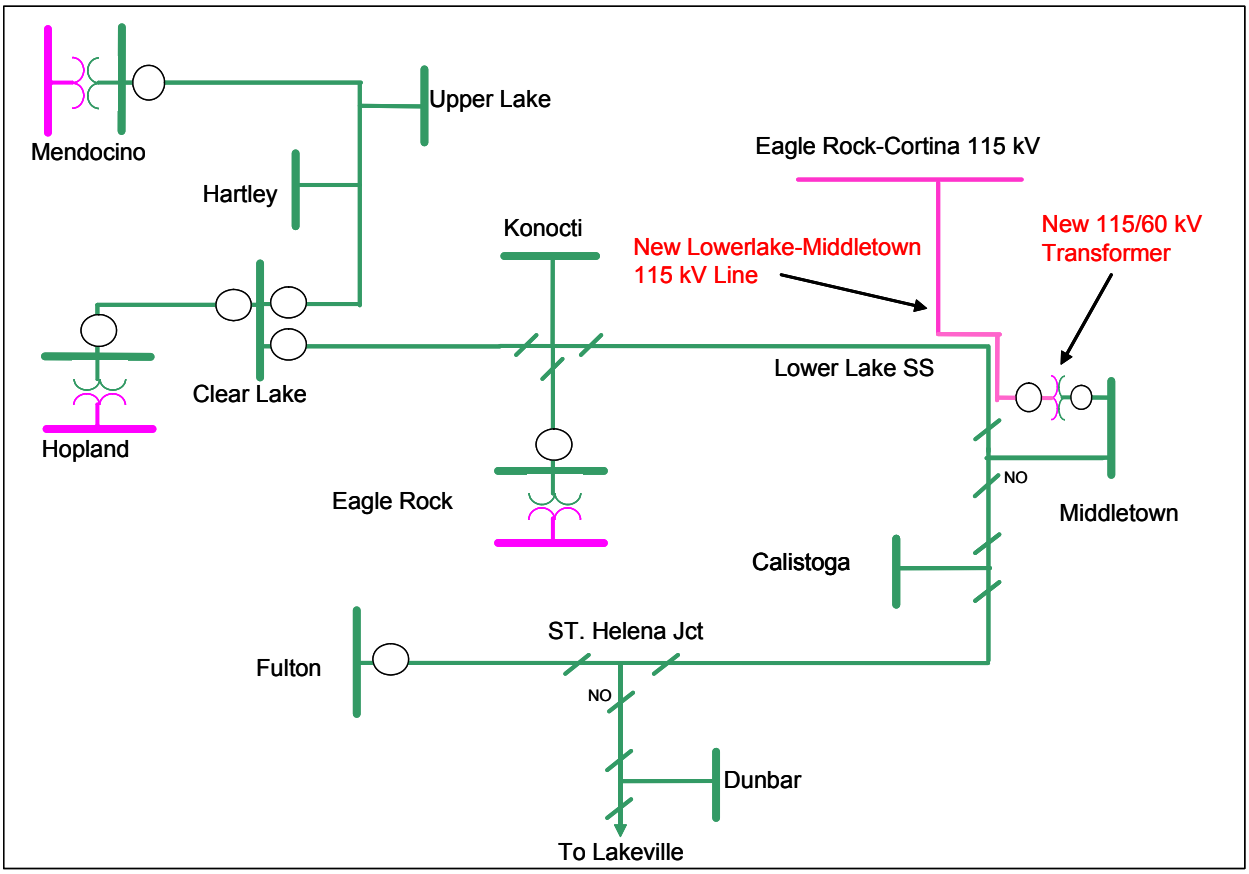

Figure 3-77: Scope Diagram

T996A: Soledad Transformer Increase Project

(Expected In Service Date - May 2016)

PROJECT INFORMATION

The preferred alternative is to replace the existing Soledad 115/60 kV Transformers Nos. 4 and 5 with two new 115/60 kV, 200 MVA transformers.

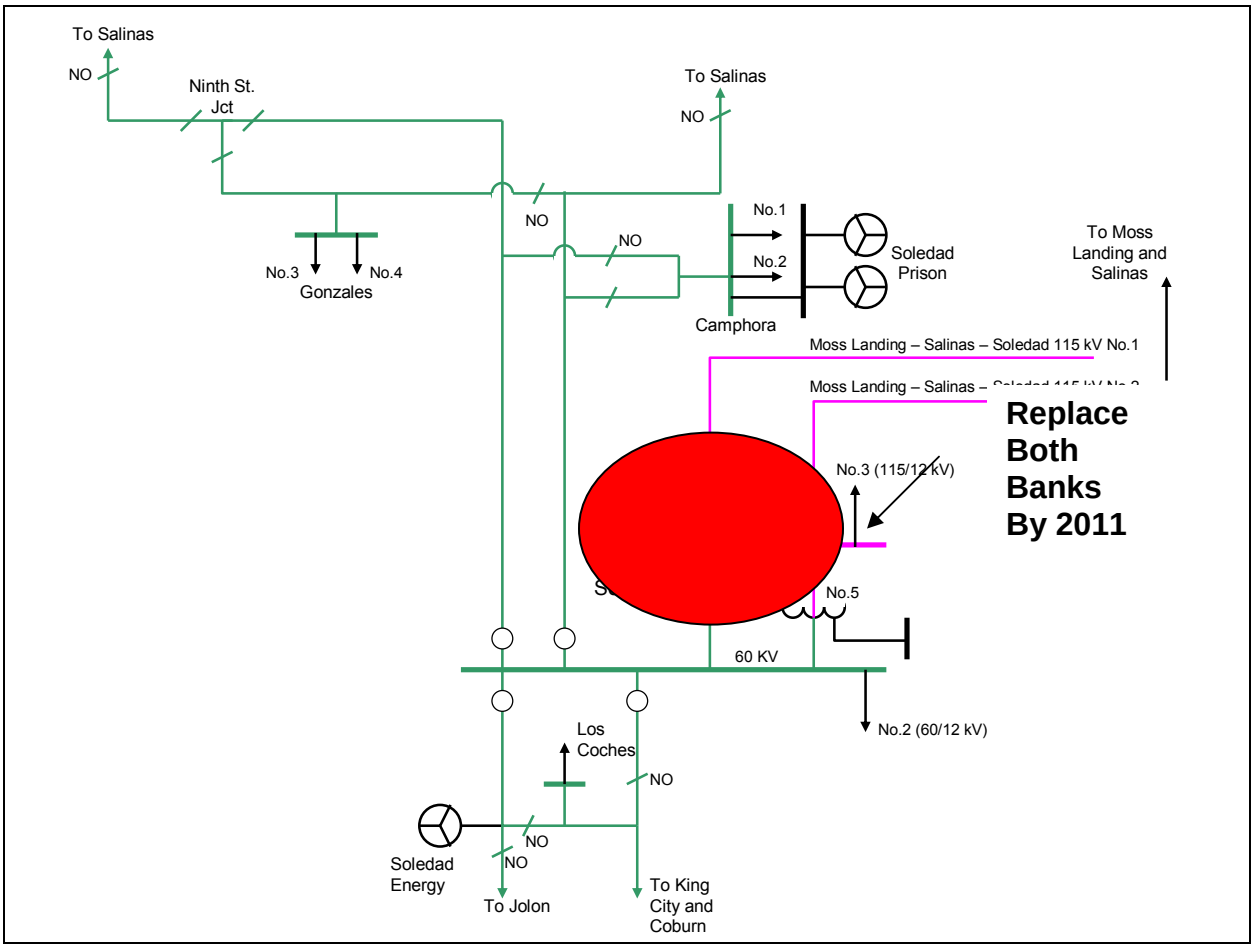

Figure 3-78: Scope Diagram

T992: San Leandro – Oakland "J" 115 kV Line Reconductoring

(Expected In Service Date –May 2017)

PROJECT INFORMATION

The project scope is to reconductor a section of the San Leandro – Oakland "J" 115 kV Line (approximately 6 miles) to 477 ACSS or equivalent.

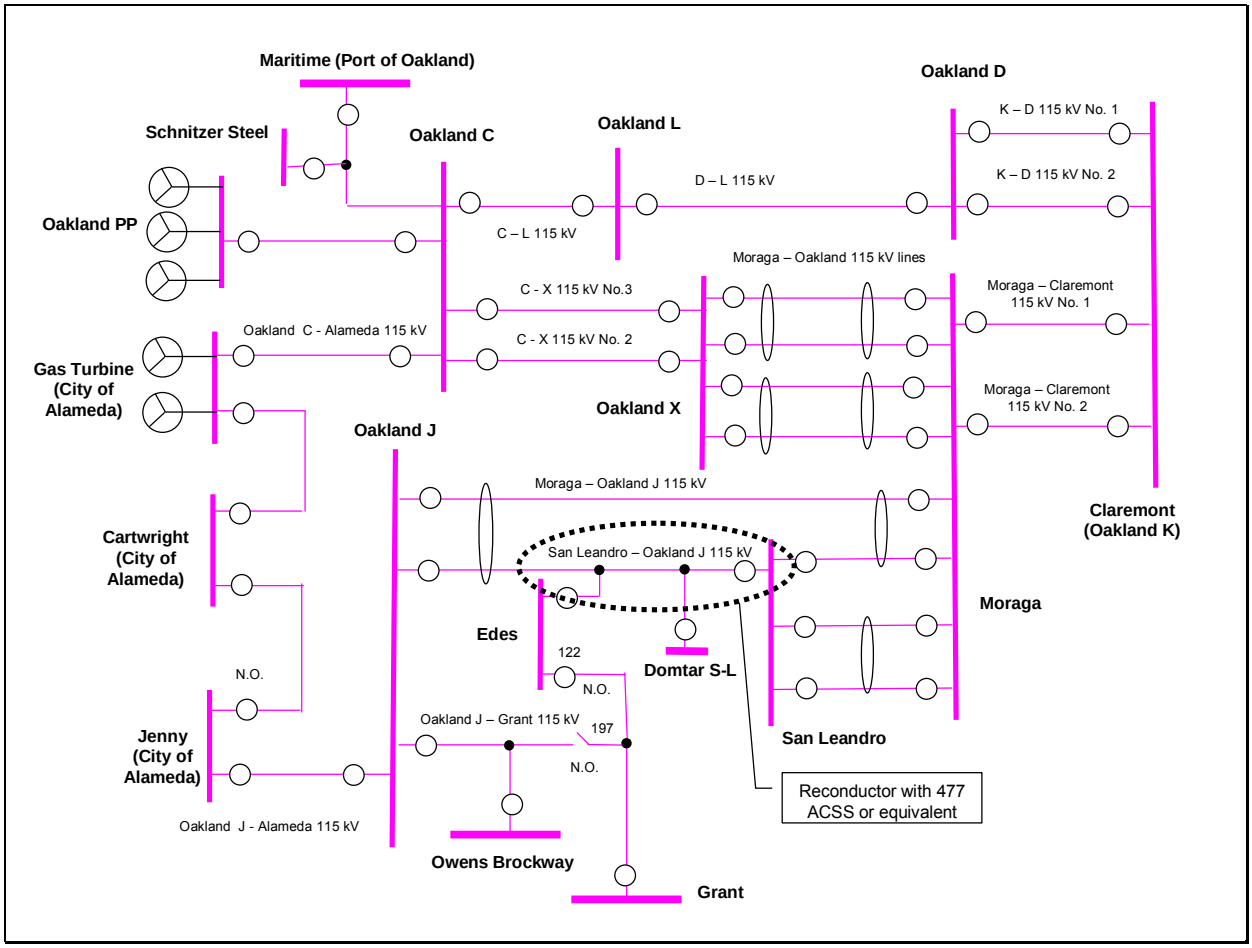

Figure 3-79: Scope Diagram

CHAPTER 4

Table 4-of Contents

2010 Projects 3
Pit 3 - Pit 1 and Pit 3 - Round Mountain 230 kV Line Relays Replacement 4
Sycamore Transmission Project 13
Red Bluff Transmission Project 23
West Sacramento Transmission Project 30
Los Padres Transmission Project 38
2011 Projects 48
Moraga-Oakland "J" SPS Project 49
Pittsburg-Lakewood SPS Project 58
Stockton 'A' – Weber 60 kV Line No. 1 and 2 Reconductor 69
Dumbarton – Newark 115 kV Line Capacity Upgrade 78
Divide Transmission Project 87
2012 Projects 97
Corcoran 115/70 kV Transformer Replacement Project 98
2013 Projects 106
Weber 230/60 kV Transformer Nos. 2 and 2A Replacement 107
Reedley-Orosi 70 kV Line Reconductor 116
Morro Bay 230/115 kV Transformer Addition Project 126
2014 Projects 136
Cottonwood-Red Bluff 60 kV Line Reconductor 137
Mountain View/Whisman–Monta Vista Reconductoring 146
Reedley-Dinuba 70 kV Line Reconductor 157
2015 167
Ashlan-Gregg and Ashlan-Herndon 230 kV Line Reconductor 168
2019 178
San Francisco 115 kV Series Reactors Project 179

2010 Projects

Pit 3 - Pit 1 and Pit 3 - Round Mountain 230 kV Line Relays Replacement

TARGETED IN-SERVICE DATE

December 2010

PURPOSE AND BENEFIT

Reliability – NERC Compliance

PROJECT CLASSIFICATION

This is a new project.

DESCRIPTION AND SCOPE OF PROJECT

The project scope is to:

- Replace the limiting protection equipment on the Pit #3-Pit #1 and Pit #3-Round Mountain 230 kV Lines with higher capacity equipment.

This project is expected to cost about $1M.

BACKGROUND

Round Mountain Substation is the main hub for generation in Shasta County. The Pit #3-Pit #1 and Pit #3-Round Mountain 230 kV Lines alone connect over 200 MW of generation from Pit 1, Pit 3, Sierra Pacific Industries, and by 2010, Hatchet Ridge, Pit 5, Pit 6, and Pit 7 also provide generation through Round Mountain to Cottonwood Substation. This is primarily a generation area that serves the system through Cottonwood Substation.

The limiting conductor on the Pit #3-Pit #1 and Pit #3-Round Mountain 230 kV Lines is 518 ACSR but the line relays and other protection equipment at Pit #1, Pit #3, and Round Mountain Substations are limiting both of these lines to a lower rating. Planning analysis determined that in 2014 an outage of the Hatchet Ridge-Round Mountain 230 kV Line (L-1) is projected to overload the Pit #3-Pit #1 230 kV Line 36%. Additionally, the Hatchet Ridge-Round Mountain 230 kV Line overloads by 39% following a combined outage of the Pit #1 - Cottonwood 230 kV Line and Round Mountain -

Cottonwood 230 kV No. 3 Line (L-2) pre-project. With the proposed project in place, this line only loads up to 79% of its emergency rating after the same outage.

BASE CASE AND STUDY ASSUMPTIONS

PG&E used base cases and assumptions approved in the CAISO Unified Planning Assumptions and Study Plan for the 2009 Transmission Planning Process cycle.

STUDY CRITERIA

CAISO grid planning criteria
NERC Transmission Planning Reliability Standards

OTHER ALTERNATIVES CONSIDERED

Alternative 1: Status Quo

This alternative is not recommended because it does not mitigate the expected capacity constraints.

PROJECT SCHEDULE

- Environmental and Permitting Processes – TBD
- Design – TBD
- Major Equipment – TBD
- Construction – TBD
- Operation Date – December 2010

KEY ISSUES

- Land-Use Restrictions – There are no land-use restrictions with this project.
- Environmental Concerns – TBD
- Special Metering or Protection – TBD
- Common Mode Exposure Items – None
- Interaction with other Projects or Studies – None

GEPSLF MODELING INFORMATION

```
##########################################################################################################
#Relay Replacement
#-----------------------------------------------------------------------------------------------------
#Replace the protection equipment on these lines so the line conductor becomes the limiting equipment
#           The line conductor is 518 ACSR
#
#Pit 3-Pit 1 230 kV Line
OLDSECDD  30185, 30190, CKT=1, SEC=1, STATUS=1,MVA1=243.4, MVA2=279.3, MVA3=357.3, MVA4=379.6
                        #Pit 1-Sierra Pacific Industries (Burney) Section
OLDSECDD  30190, 30195, CKT=1, SEC=1, STATUS=1,MVA1=243.4, MVA2=279.3, MVA3=357.3, MVA4=379.6
                        #Pit 3-Sierra Pacific Industries (Burney) Section
#
#
#Pit 3-Round Mountain 230 kV Line
OLDSECDD  30195, 30116, CKT=1, SEC=1, STATUS=1,MVA1=243.4, MVA2=279.3, MVA3=357.3, MVA4=379.6
                        #Pit 3-Hatchet Ridge Section
OLDSECDD  30116, 30245, CKT=1, SEC=1, STATUS=1,MVA1=243.4, MVA2=279.3, MVA3=357.3, MVA4=379.6
                        #Hatchet Ridge-Round Mountain Section
##########################################################################################################
```

MISCELLANEOUS DATA

- PG&E will construct, own, and finance the project
- PG&E will be the planned operator of the project

ATTACHMENTS

1. Scope Diagram
2. Area Generation
3. Power Flow Summary
4. Pre and Post Project Power Flow Plots

Attachment 1: Scope Diagram

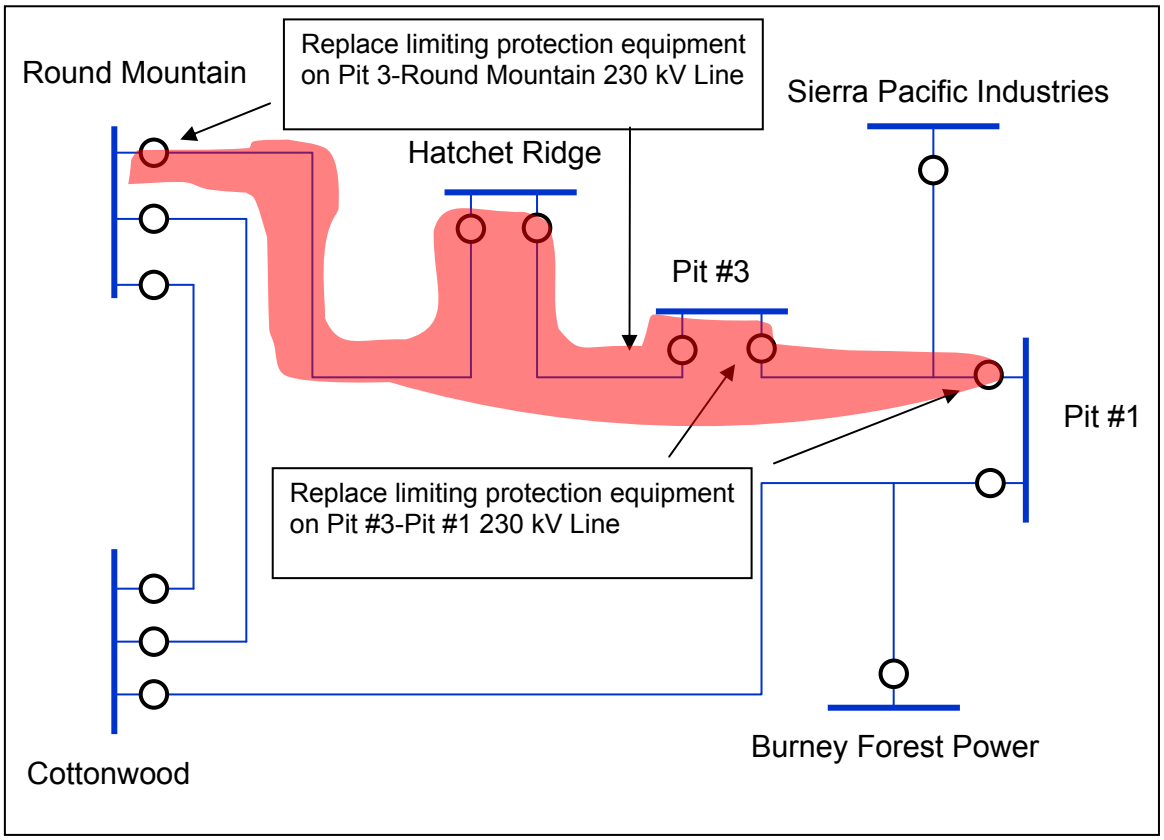

Figure 4-1: Scope Diagram

Attachment 2: Area Generation

Table 4-1: Generation on Pit #3-Pit #1 and Pit #3-Round Mountain 230 kV Lines

Generator	MW
Pit 1	40
Pit 3	54
Sierra Pacific Industries	16
Hatchet Ridge	103
Total:	213

Table 4-2: Other Major 230 kV Generation in the Area

Generator	MW
Burney Forest Power	16
Pit 5	138
Pit 6	70
Pit 7	104
Total	328

Attachment 3: Power Flow Summary

Table 4-3: Power Flow Summary

Contingency	Facility Affected	2011 (Pre-Project)	2012 (Pre-Project)	2013 (Pre-Project)	2014 (Pre-Project)	2014 (Post-Project)
Hatchet Ridge - Round Mountain 230 kV Line (L-1)	Pit #3 - Pit #1 230 kV Line (Pit 1-SPI-Burney)	136%	136%	136%	136%	68%
	Pit #3 - Pit #1 230 kV Line (SPI-Burney-Pit 3)	126%	126%	126%	126%	64%
Pit #1 - Cottonwood 230 kV Line/Round Mountain - Cottonwood 230 kV No. 3 Line (L-2)	Round Mountain - Hatchet Ridge 230 kV Line	139%	139%	139%	139%	79%

Attachment 4: Pre and Post Power Flow Plots Summary

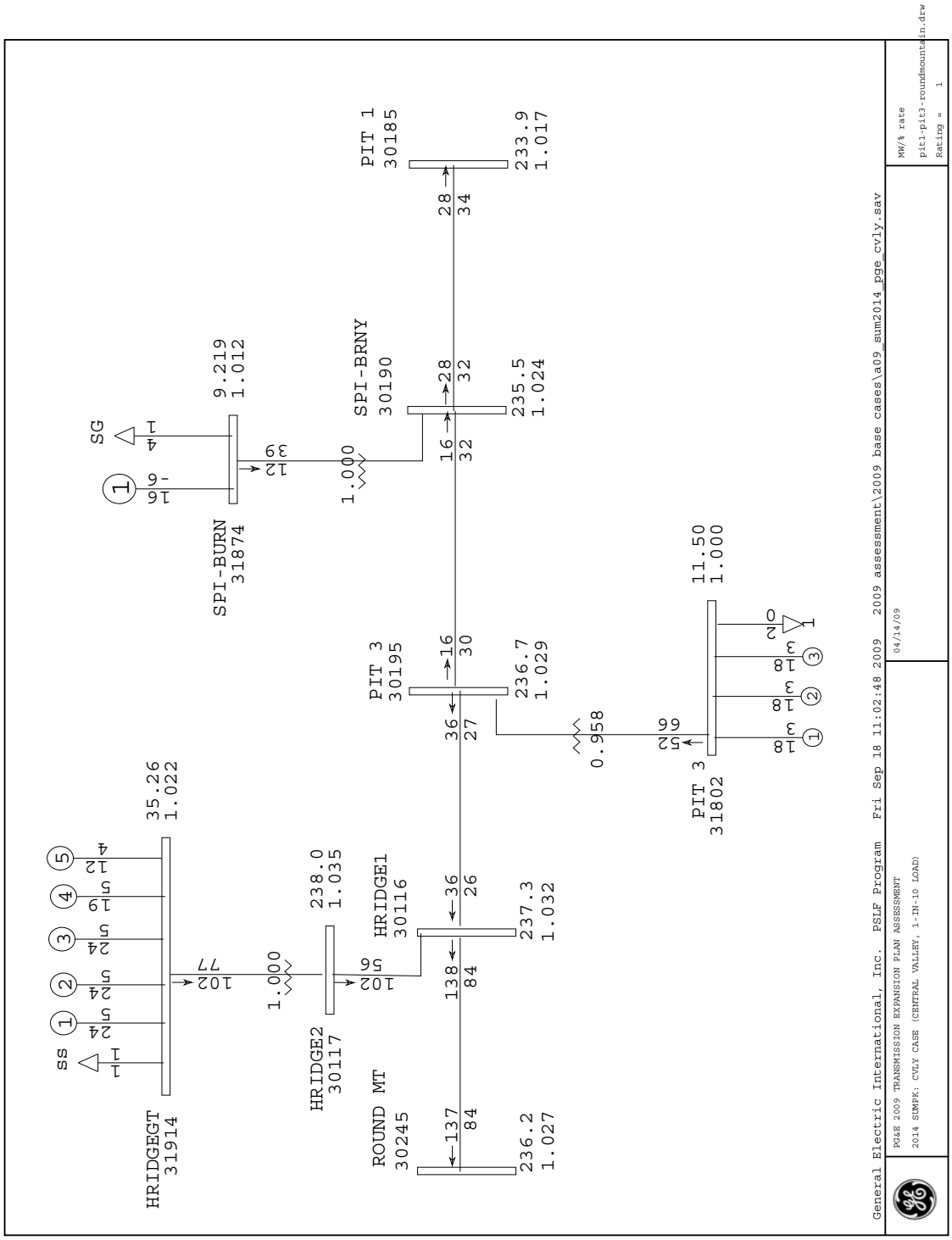

Figure 4-2: Pre-Project – 2014 Normal Conditions

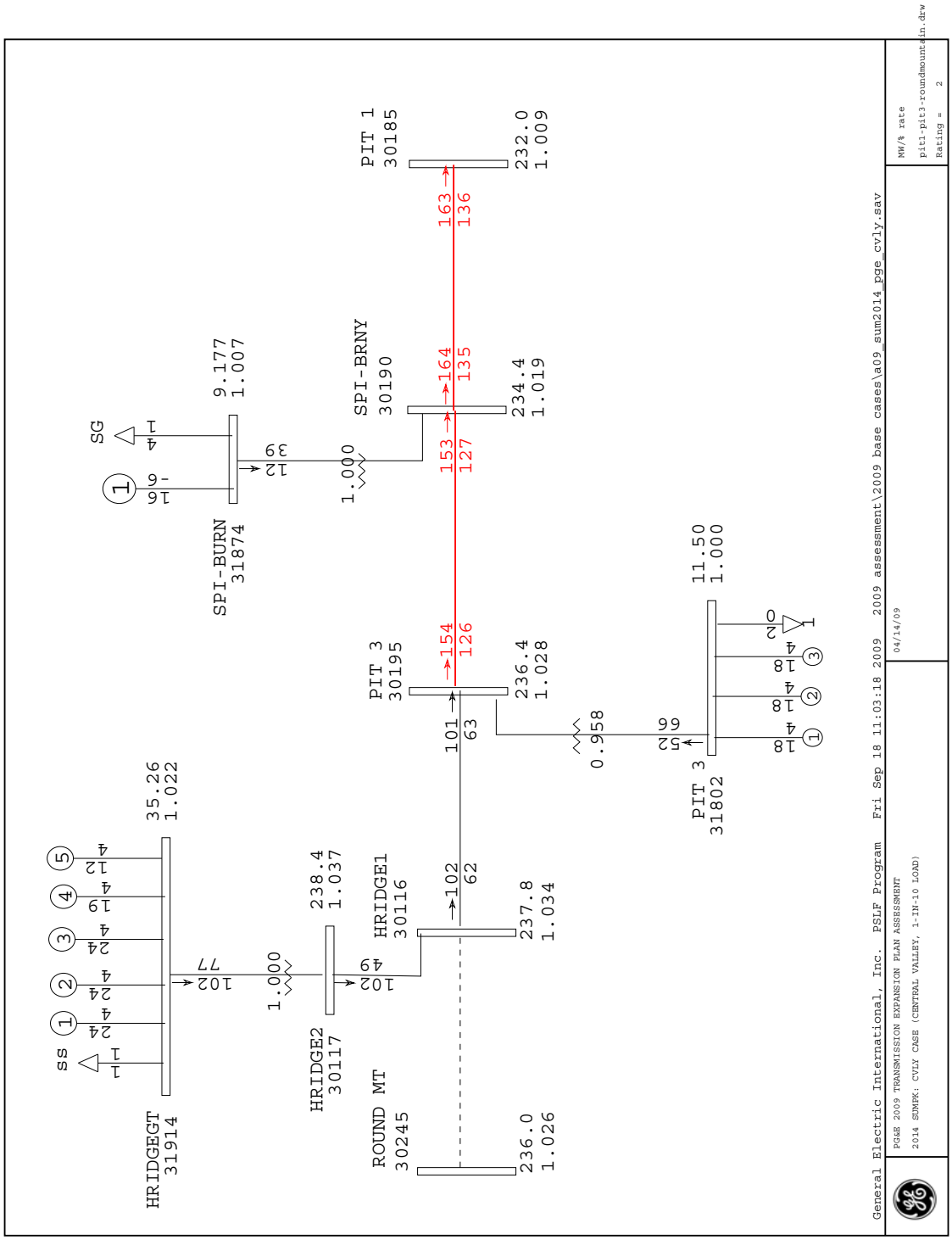

Figure 4-3: Pre-Project – 2014 Loss of Hatchet Ridge - Round Mountain 230 kV Line (L-1)

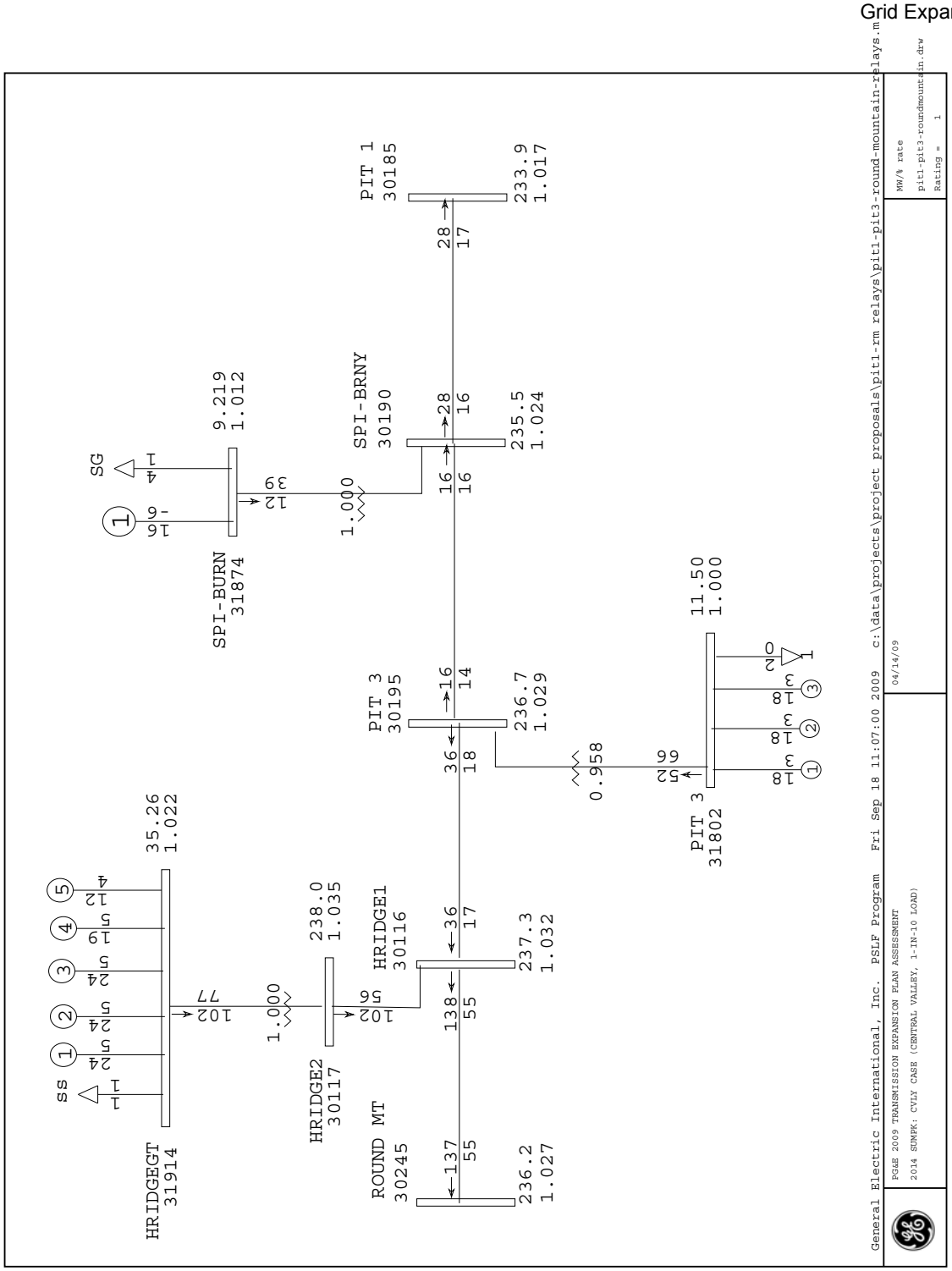

Figure 4-4: Post-Project – 2014 Normal Conditions

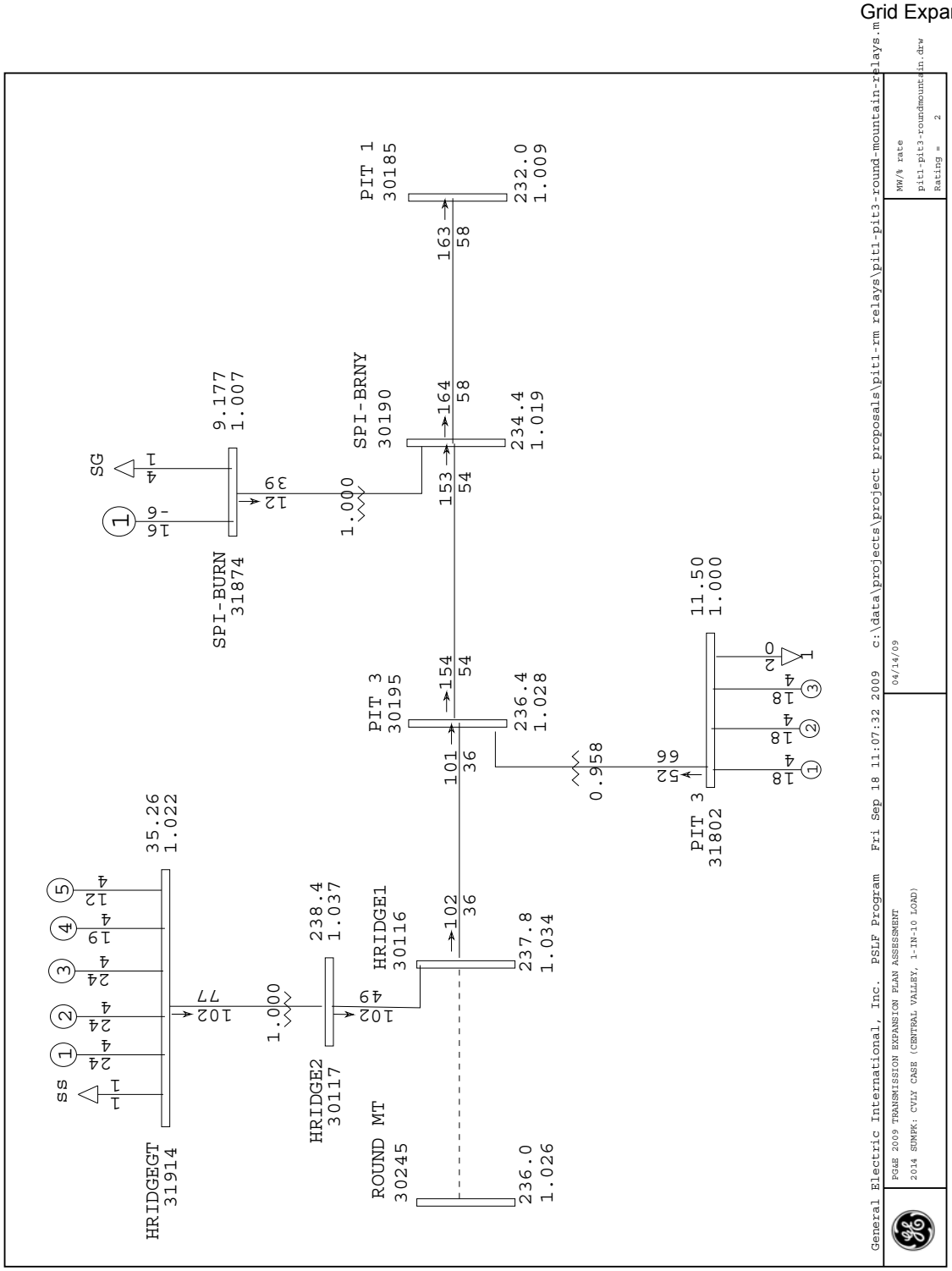

Figure 4-5: Post-Project – 2014 Loss of Hatchet Ridge - Round Mountain 230 kV Line (L-1)

Sycamore Transmission Project

IN-SERVICE DATE

December 2010

PURPOSE AND BENEFIT

Reliability – NERC compliance.

PROJECT CLASSIFICATION

This is a new project.

DESCRIPTION AND SCOPE OF PROJECT

This project proposes to develop a manually operated switching plan or install a new special protection scheme (SPS) at Sycamore Substation. The switching plan or SPS would curtail load blocks at Sycamore Substation due to the loss of both the Table 4-Mountain – Notre Dame – Sycamore and Table 4-Mountain – Butte Number (No.) 2 115 kV lines. This SPS will be designed to be fully redundant, as required by WECC standards.

In addition, the Table 4-Mountain – Butte No. 1 115 kV Line would be re-rated to 4 feet per second (fps).

This project is expected to cost between $1M and $2M.

BACKGROUND

The Table 4-Mountain 115 kV transmission system provides electric service to about 65,000 customers in Butte County. Electric substations interconnected to the Butte 115 kV system include: Butte, Notre Dame, Table 4-Mountain, Chico, Nord, Sycamore and Paradise.

Planning studies have concluded that an outage of the Table 4-Mountain – Notre Dame – Sycamore 115 kV and Table 4-Mountain – Butte No. 2 115 kV Lines would result in an overload of the Table 4-Mountain – Butte No. 1 115 kV Line.

The existing Table 4-Mountain – Butte No. 1 115 kV Line uses 715.5 AAC conductor at 2 fps, giving it a summer normal and emergency rating of 126 and 148 MVA, respectively.

BASE CASE AND STUDY ASSUMPTIONS

PG&E used base cases and assumptions approved in the CAISO Unified Planning Assumptions and Study Plan for the 2009 Transmission Planning Process cycle.

STUDY CRITERIA

CAISO grid planning criteria
NERC Transmission Planning Reliability Standards

OTHER ALTERNATIVES CONSIDERED

Alternative 1: Status Quo

This alternative does not address the existing overload condition.

Alternative 2: Reconductor the Table 4-Mountain – Butte No. 1 115 kV Line

This alternative proposes to reconductor the 17 mile long Table 4-Mountain – Butte No. 1 115 kV Line. This alternative would provide the capacity necessary to serve the load at Butte, Chico "B", Nord and Sycamore Substations. This alternative is projected to cost between $15 million and $20 million.

PROJECT SCHEDULE

- Environmental and Permitting Processes – TBD
- Design – TBD
- Major Equipment – TBD
- Construction – TBD

KEY ISSUES

- Land-Use Restrictions – TBD
- Environmental Concerns – TBD
- Special Metering or Protection - Yes
- Common Mode Exposure Items - None
- Interaction with other Projects or Studies – None

GEPSLF MODELING INFORMATION

```
#Re-rates the summer ratings for Table 4-Mountain - Butte No. 1 115 kV Line
#from 2 fps to 4 fps.

OLDSECDD  31500, 31501, CKT=1, SEC=1, STATUS=1,MVA1=151, MVA2=175
OLDSECDD  31501, 31504, CKT=1, SEC=1, STATUS=1,MVA1=151, MVA2=175
```

ATTACHMENTS

1. Scope Diagram
2. Demand Forecast
3. Power Flow Summary
4. Pre and Post Project Power Flow Plots

Attachment 1: Scope Diagram

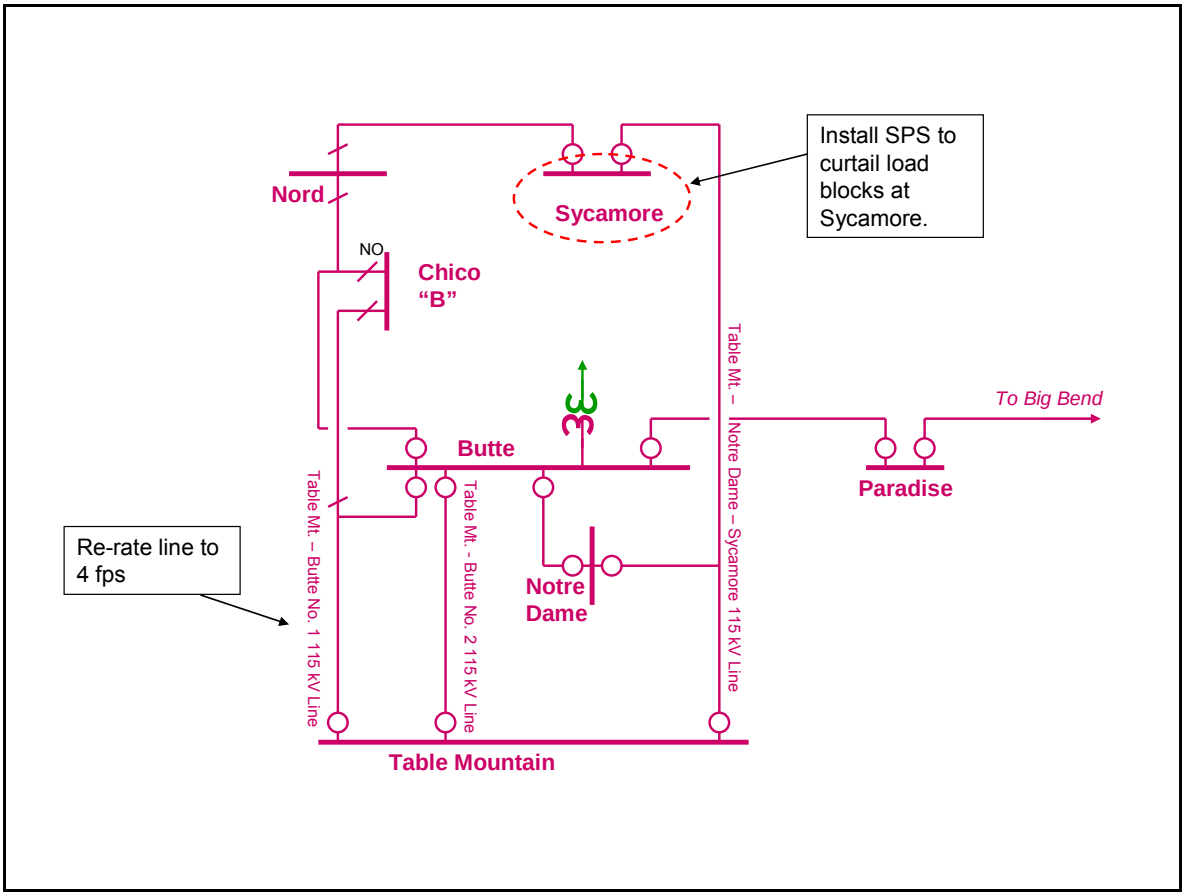

Figure 4-6: Scope Diagram

Attachment 2: Demand Forecast

Table 4-4: Demand Forecast in the Sycamore 115 kV Area

Substation/Bank	2010 (MW)	2011 (MW)	2012 (MW)	2013 (MW)	2014 (MW)	Growth Rate (MW/yr)
Notre Dame #1	20.4	20.6	20.78	20.86	20.99	0.15
Butte #2	15.35	15.5	15.64	15.69	15.8	0.11
Butte #3	22.87	23.1	23.29	23.39	23.54	0.17
Chico B #1	16.54	16.7	16.84	16.91	17.02	0.12
Chico B #2	16.24	16.4	16.54	16.62	16.71	0.12
Nord #1	15.65	18.14	18.27	18.32	18.41	0.69
Nord #2	16.74	16.91	17.05	17.12	17.22	0.12
Sycamore #1	30.51	30.8	31.06	31.2	31.39	0.22
Sycamore #2	21.3	21.5	21.68	21.77	21.92	0.16
Sycamore #3	29.22	29.5	29.75	29.88	30.07	0.21
Paradise #1	21.18	21.33	21.46	21.5	21.59	0.1
Paradise #2	31.98	32.2	32.4	32.47	32.59	0.15

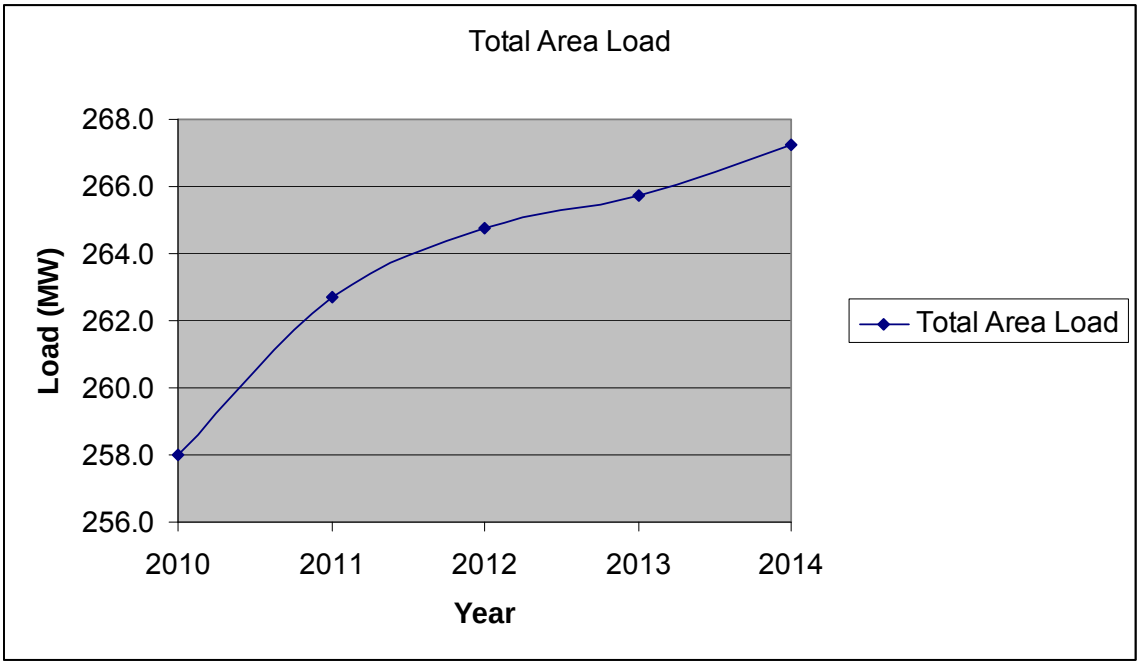

Figure 4-7: Demand Forecast Graph

Attachment 3: Power Flow Summary

Table 4-5: Power Flow Results

No.	Facility	Facility Rating	2010	2011	2012	2013	2014	2019	Post Project 2019*	Contingency
1	Table 4-Mountain - Butte 115 kV No. 1 Line (Chico Tap 1-Butte)	SE Rating 739 Amps	121%	124%	125%	125%	126%	129%	67%	Table 4-Mountain - Sycamore 115 kV Line/Table 4-Mountain - Butte 115 kV Line No. 2 (L-2)
2	Table 4-Mountain - Butte 115 kV No. 1 Line (Chico Tap 1-Table 4-Mountain)	SE Rating 739 Amps	142%	145%	146%	147%	148%	151%	86%	

Assumes all Sycamore Substation load blocks are curtailed.

Attachment 4: Pre and Post Project Power Flow Plots

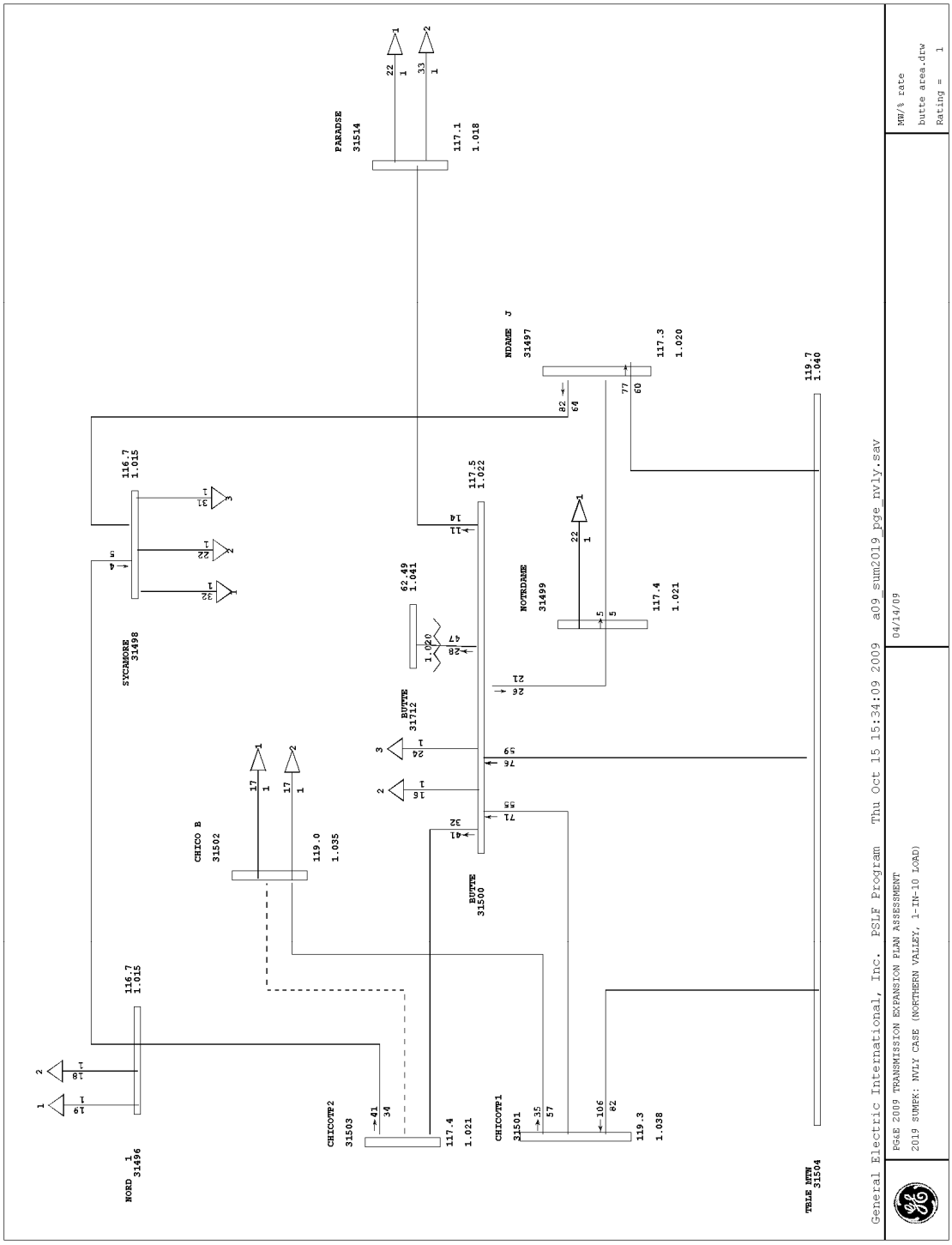

Figure 4-8: 2019 Pre Project – Normal Conditions

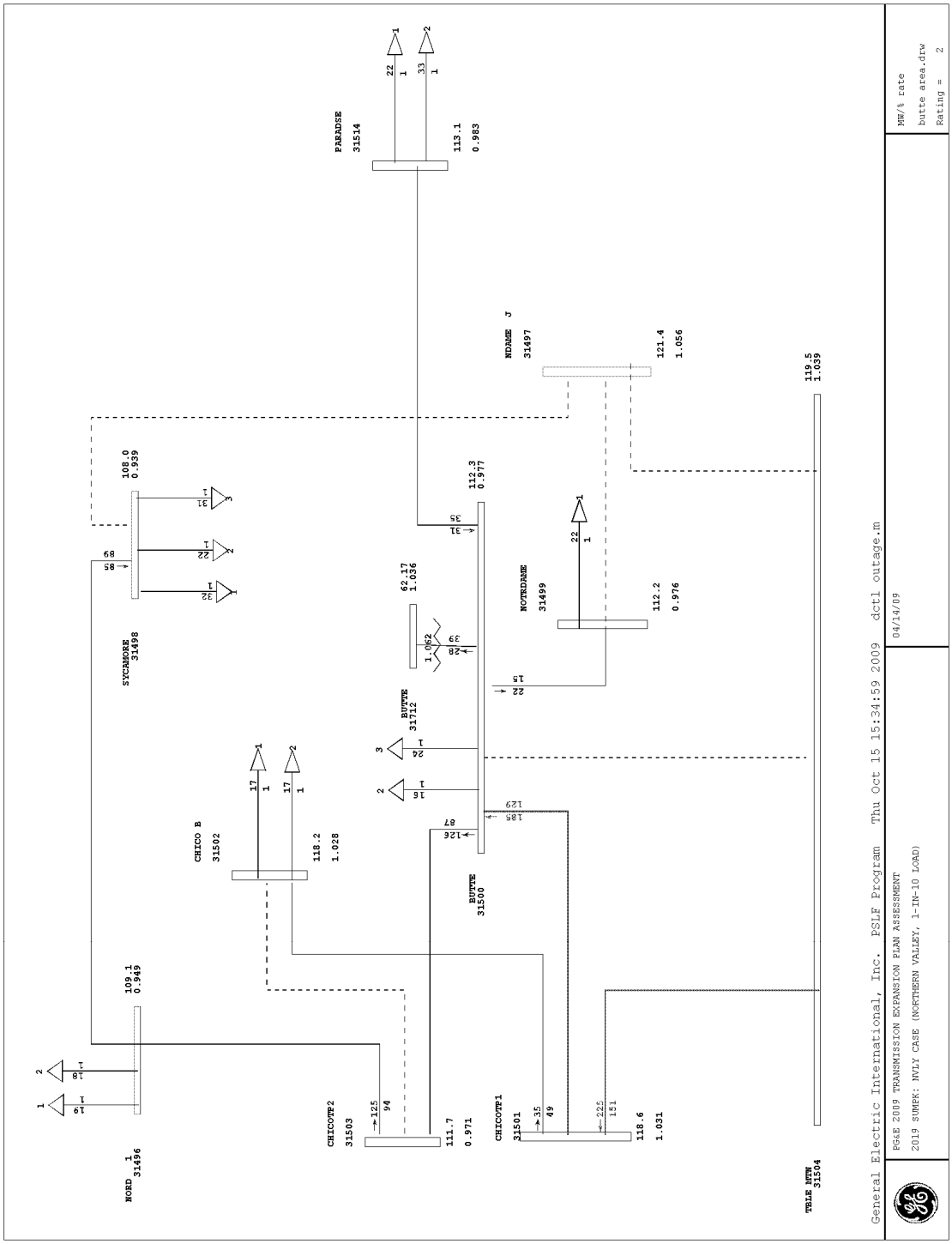

Figure 4-9: 2019 Pre Project – Emergency Conditions

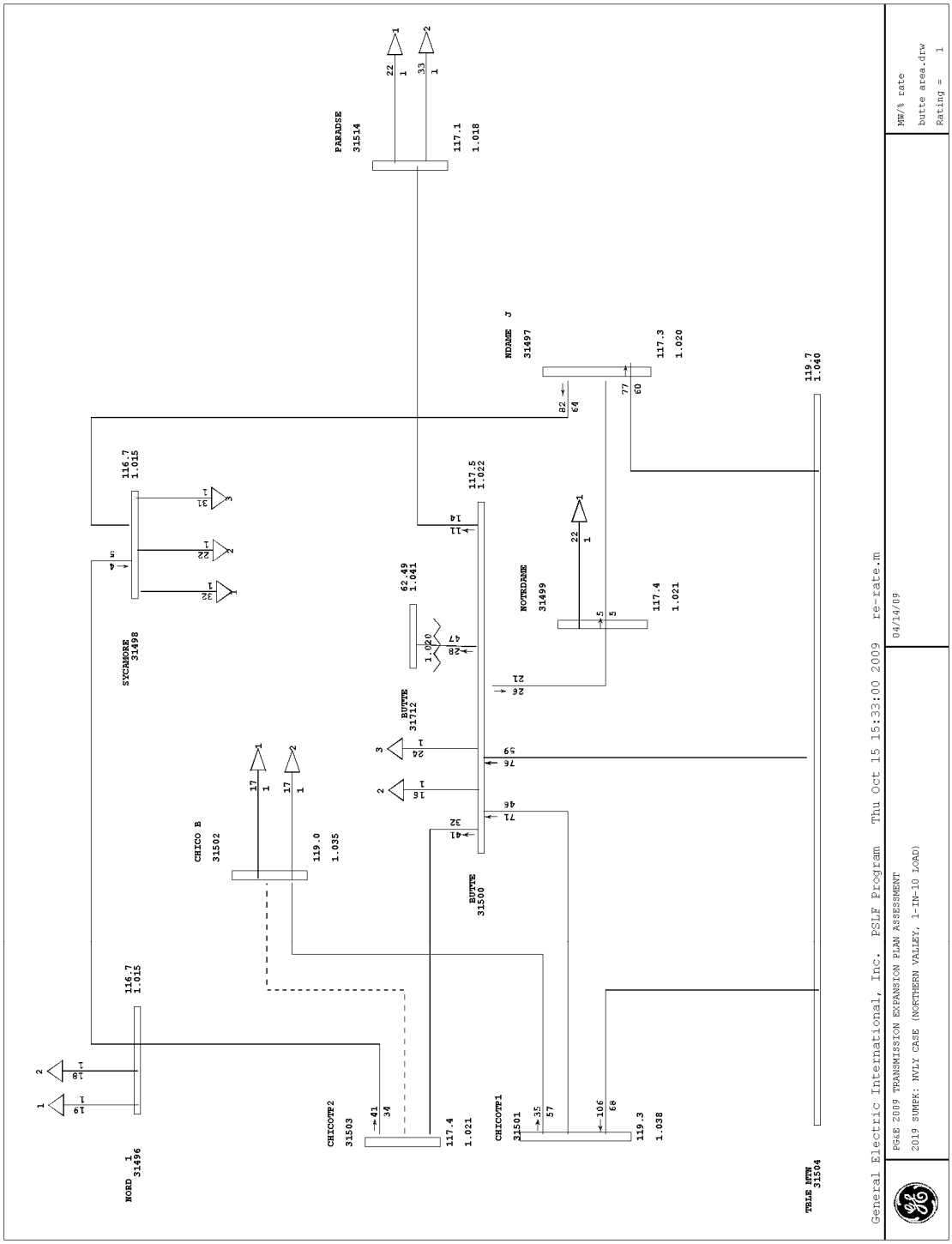

Figure 4-10: 2019 Post Project – Normal Conditions

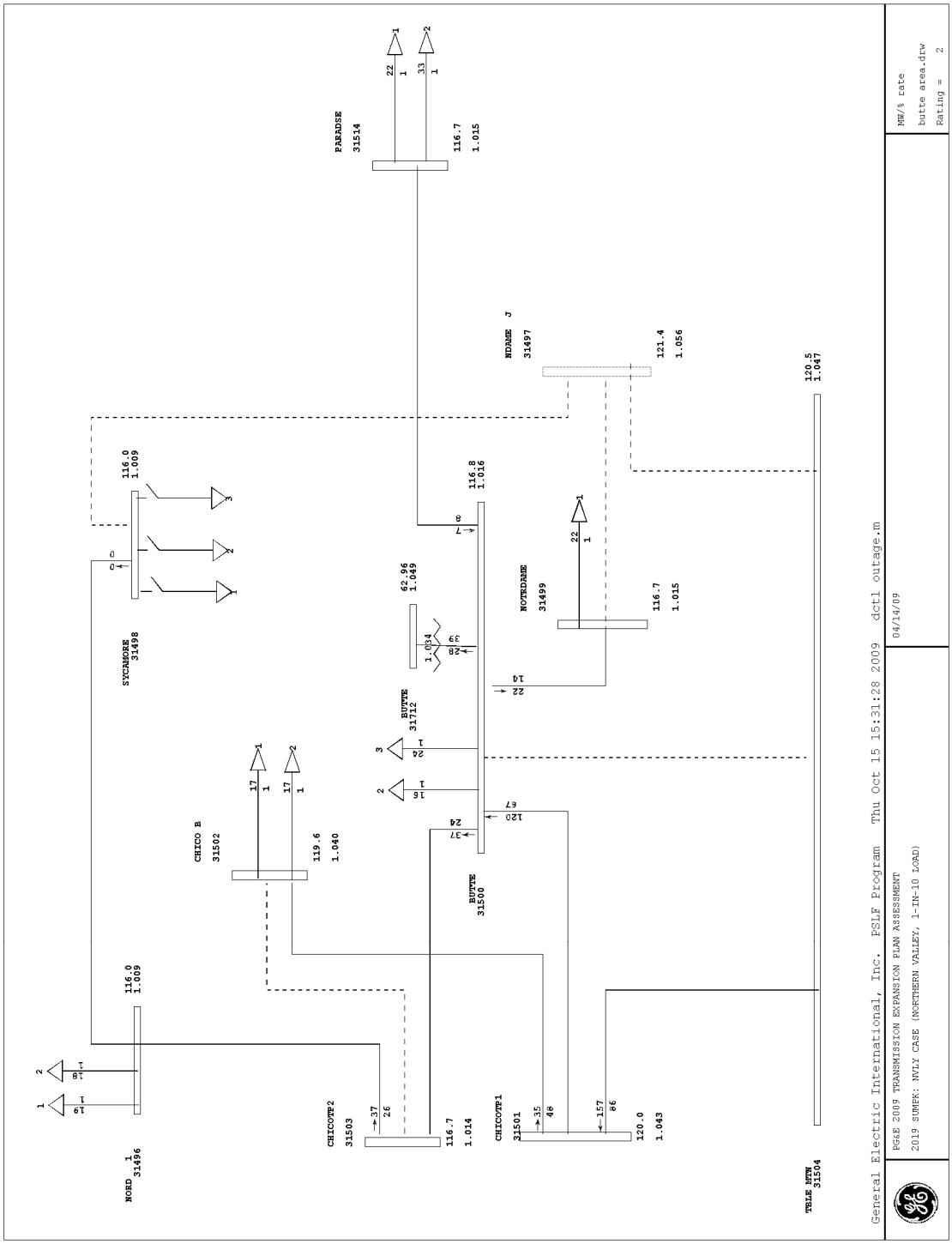

Figure 4-11: 2019 Post Project – Emergency Conditions (all load curtailed at Sycamore)

Red Bluff Transmission Project

IN-SERVICE DATE

December 2010

PURPOSE AND BENEFIT

Reliability – NERC compliance.

PROJECT CLASSIFICATION

This is a new project.

DESCRIPTION AND SCOPE OF PROJECT

This project proposes to develop a manually operated switching plan or install a new special protection scheme (SPS) at Red Bluff and Benton Substations. This switching plan or SPS would trip Red Bluff circuit breaker (CB) numbers (Nos.) 42 and 52 to open end the Cottonwood-Red Bluff and Coleman-Red Bluff 60 kV Lines respectively due to the outage of the Cottonwood 60 kV Bus. It would also trip Benton CB No. 32 to open end the Cottonwood-Benton #1 60 kV Line and drop load at Girvan and Anderson Substations. This SPS will be designed to be fully redundant, as required by WECC standards.

This project is expected to cost between $3M and $5M.

BACKGROUND

The Cottonwood 60 kV transmission system provides electric service to customers in Shasta County. Electric substations interconnected to the Cottonwood 60 kV system include: Red Bluff, Anderson, Girvan, Wintu Pumps, Tyler, Lousiana Pacific, Gerber, Dairyville, Los Molinos, and Vina.

Planning studies have concluded that an outage of the Cottonwood 60 kV Bus would result in severe low voltages below 0.70 per unit and thermal overload conditions on the Cascade-Benton-Deschutes greater than 80% in 2010. Additionally, it also causes an overload condition on the Coleman-Red Bluff 60 kV Line by greater than 30%.

The Cottonwood-Red Bluff 60 kV Line overloads under normal conditions in 2019 but there is a project to reconductor that line before 2019.

BASE CASE AND STUDY ASSUMPTIONS

PG&E used base cases and assumptions approved in the CAISO Unified Planning Assumptions and Study Plan for the 2009 Transmission Planning Process cycle.

STUDY CRITERIA

CAISO grid planning criteria
NERC Transmission Planning Reliability Standards

OTHER ALTERNATIVES CONSIDERED

Alternative 1: Status Quo

This alternative does not address the projected low voltage or thermal overload conditions.

PROJECT SCHEDULE

- Environmental and Permitting Processes – TBD
- Design – TBD
- Major Equipment – TBD
- Construction – TBD

KEY ISSUES

- Land-Use Restrictions – TBD
- Environmental Concerns – TBD
- Special Metering or Protection - Yes
- Common Mode Exposure Items - None
- Interaction with other Projects or Studies – None

GEPSLF MODELING INFORMATION

None required.

ATTACHMENTS

1. Scope Diagram
2. Demand Forecast
3. Power Flow Summary
4. Pre and Post Project Power Flow Plots

Attachment 1: Scope Diagram

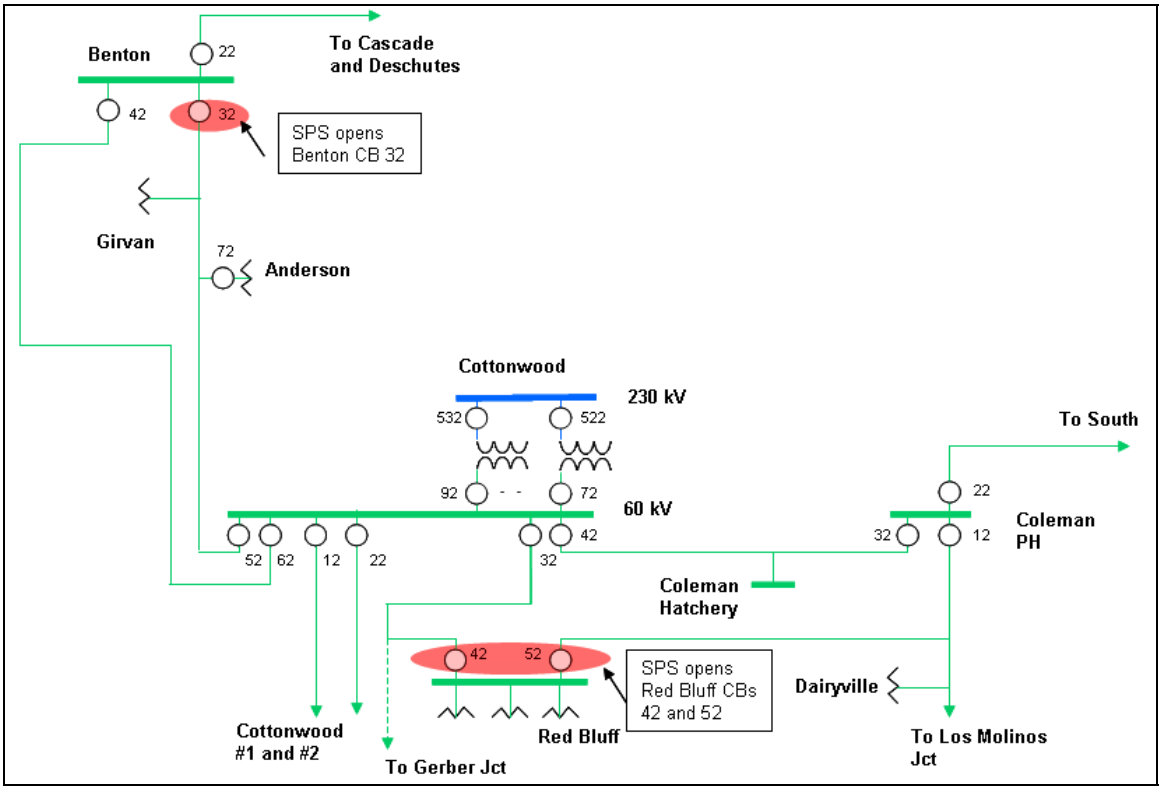

Figure 4-12: Scope Diagram

Attachment 2: Demand Forecast

Table 4-6: Demand Forecast in the Red Bluff 60 kV Area

Substation	2010 (MW)	2011 (MW)	2012 (MW)	2013 (MW)	2014 (MW)	Growth Rate (MW/yr)
Red Bluff	32.6	33.3	34	34.6	35.3	0.7
Anderson	16.5	17	17.5	18.4	18.8	0.6
Girvan	10.6	11	11.3	11.8	12.1	0.4
Wintu Pumps	1.9	1.9	1.9	1.9	1.9	0.0
Tyler	16.1	16.5	16.8	17.1	17.3	0.3
Louisiana Pacific	4.9	4.9	4.9	4.9	4.9	0.0
Gerber	6	6.2	6.4	6.5	6.7	0.2
Dairyville	4	4.2	4.3	4.4	4.5	0.1
Los Molinas	7.3	7.4	7.6	7.7	7.8	0.1
Vina	1.7	1.7	1.7	1.8	1.8	0.0

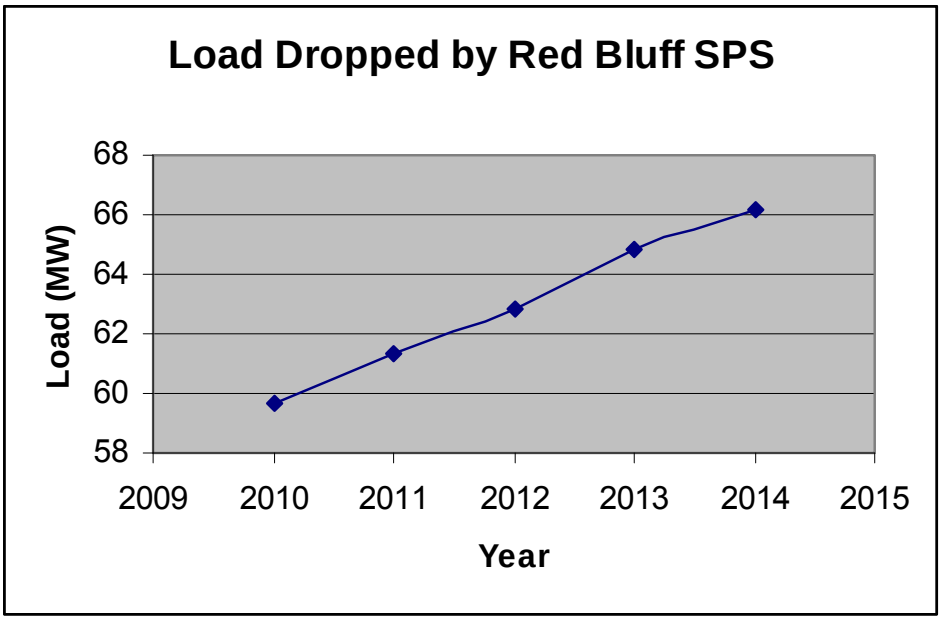

Figure 4-13: SPS Load Forecast Graph

Attachment 3: Power Flow Results

Table 4-7: Power Flow Results

			Pre Project						Post Project	
#	Facility	Facility Rating	2010	2011	2012	2013	2014	2019	2019	Contingency
1	Red Bluff 60 kV Bus Voltage	115 kV	Not Converged						-	Cottonwood 60 kV Bus
2	Cascade-Benton-Deschutes 60 kV Line	SE Rating 327 Amps	Not Converged						91%	
3	Coleman-Red Bluff 60 kV Line	SE Rating 327 Amps	Not Converged						48%	

Attachment 4: Pre and Post Project Power Flow Plots

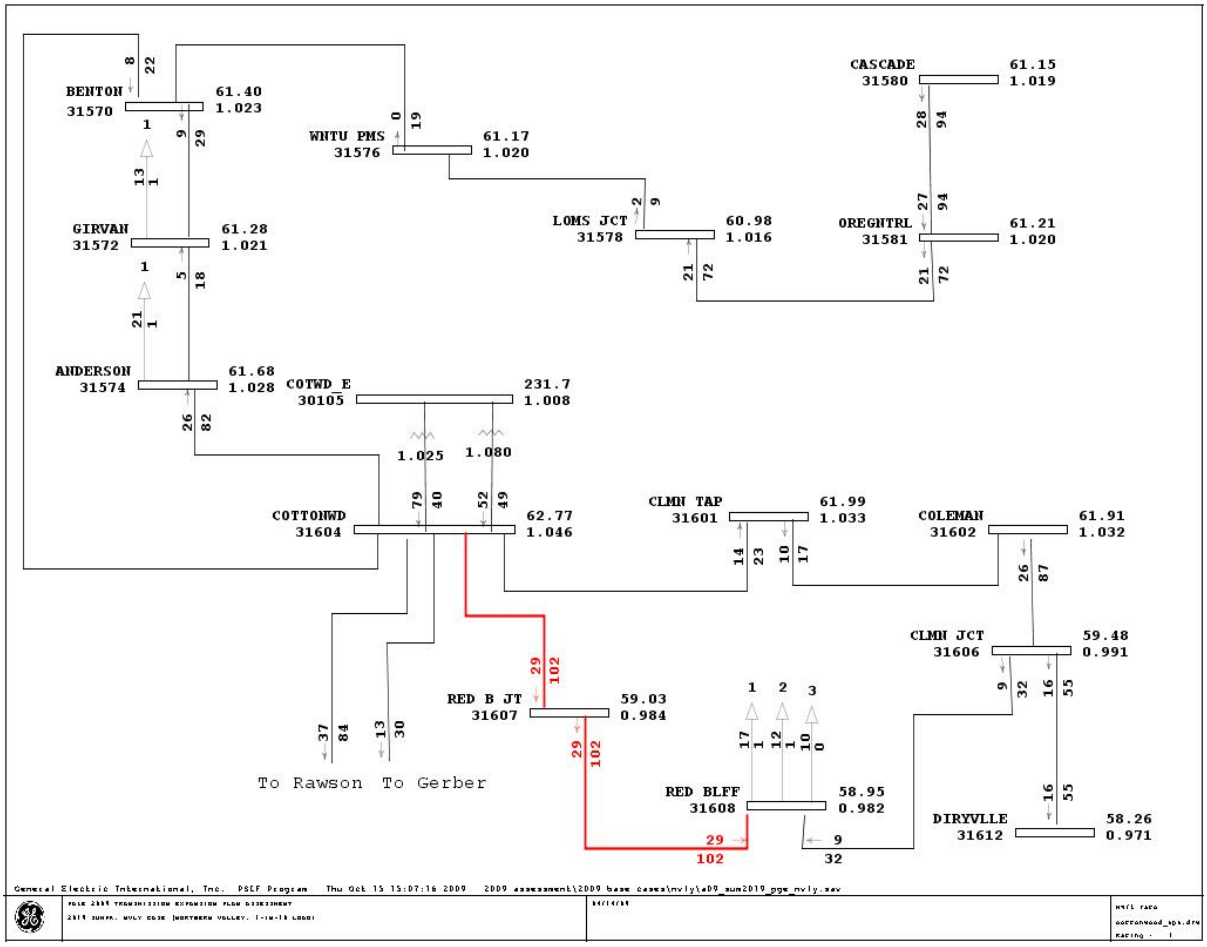

Figure 4-14: Pre Project – Normal Conditions

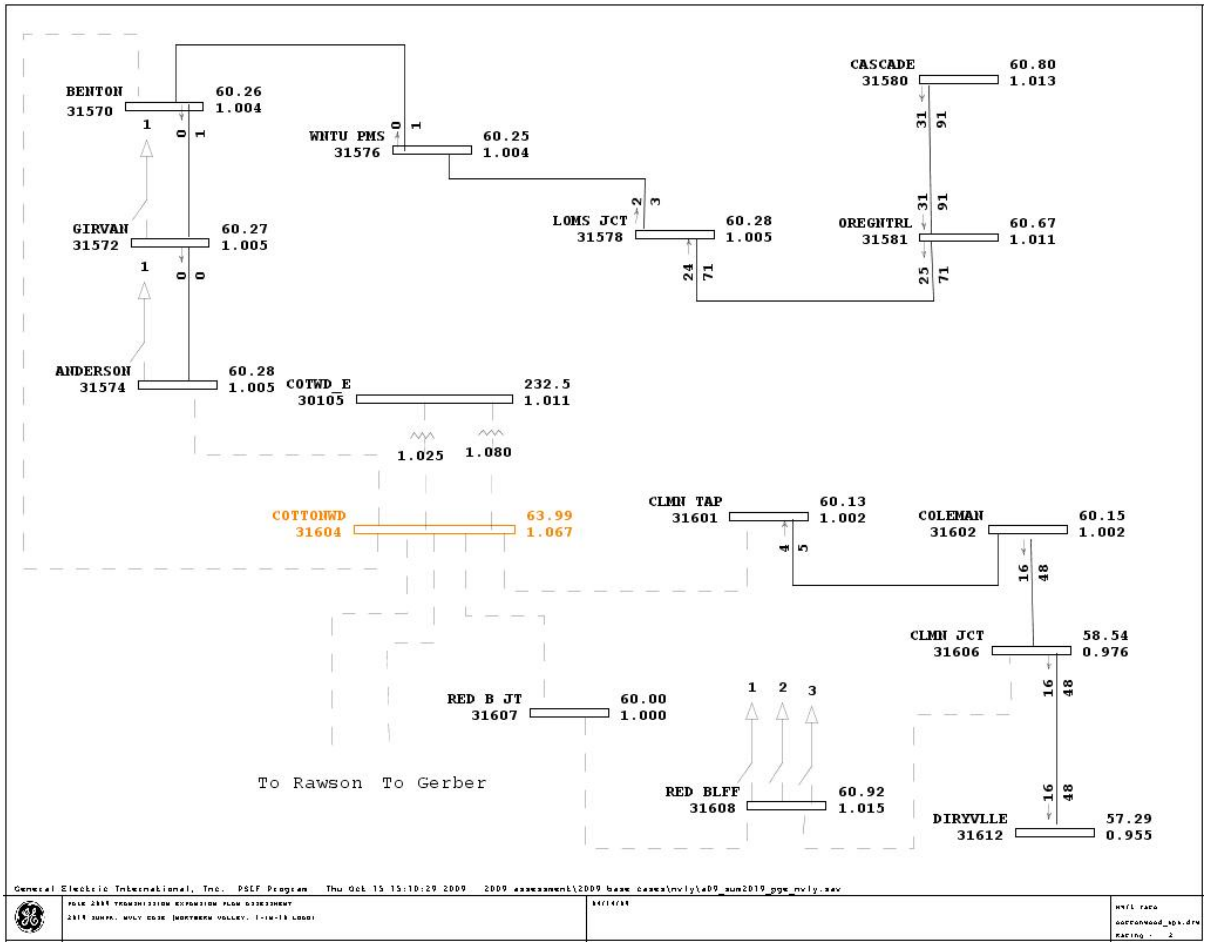

Figure 4-15: Post Project – Loss of Cottonwood 60 kV Bus

West Sacramento Transmission Project

IN-SERVICE DATE

December 2010

PURPOSE AND BENEFIT

Reliability – NERC compliance.

PROJECT CLASSIFICATION

This is a new project.

DESCRIPTION AND SCOPE OF PROJECT

This project proposes to develop a manually operating switching plan or install a new special protection scheme (SPS) at West Sacramento Substation. The switching plan or SPS at West Sacramento Substation would trip West Sacramento circuit breaker (CB) number (No.) 122 due to the loss of the Rio Oso – West Sacramento, West Sacramento – Brighton 115 kV Double Circuit Tower Line (DCTL). The SPS would drop all sources into West Sacramento, dropping approximately 82 MW of load. This SPS will be designed to be fully redundant, as required by WECC standards.

This project is expected to cost between $1M and $2M.

BACKGROUND

The Davis / West Sacramento 115 kV transmission system provides electric service to about 90,800 customers in Yolo County. Electric substations interconnected to the Davis / West Sacramento 115 kV system include: Davis, Deepwater, Dixon, Grand Island, Knights Landing, Plainfield, West Sacramento, Winters, Woodland, Zamora, Dixon Canning, Barker Slough, and US Post Office. In addition, the University of California - Davis and Travis Air Force Base are large load transmission service customers that are electrically served by this transmission system.

Planning studies have concluded that an outage of the Rio Oso – West Sacramento and West Sacramento – Brighton 115 kV Double Circuit Tower Line (DCTL) would result in thermal overload conditions on the Brighton – Davis 115 kV Line of 130 percent in 2010.

BASE CASE AND STUDY ASSUMPTIONS

PG&E used base cases and assumptions approved in the CAISO Unified Planning Assumptions and Study Plan for the 2009 Transmission Planning Process cycle.

STUDY CRITERIA

CAISO grid planning criteria
NERC Transmission Planning Reliability Standards

OTHER ALTERNATIVES CONSIDERED

Alternative 1: Status Quo

This alternative does not address the projected low voltage conditions.

Alternative 2: Convert the Vaca – Davis 60 kV lines to 115 kV operation

This alternative proposes to reconductor and convert the 60 kV lines between Vaca – Dixon and Davis Substations to 115 kV operation. This alternative would provide two additional 115 kV lines into the Davis / West Sacramento transmission system and is projected to cost between $70 million and $100 million.

This alternative is recommended as a long term solution, however, if approved this alternative will correct the overload in 2014.

PROJECT SCHEDULE

- Environmental and Permitting Processes – TBD
- Design – TBD
- Major Equipment – TBD
- Construction – TBD

KEY ISSUES

- Land-Use Restrictions – TBD
- Environmental Concerns – TBD
- Special Metering or Protection - Yes
- Common Mode Exposure Items - None
- Interaction with other Projects or Studies – None

GEPSLF MODELING INFORMATION

None required.

ATTACHMENTS

1. Scope Diagram
2. Demand Forecast
3. Power Flow Summary
4. Pre and Post Project Power Flow Plots

Attachment 1: Scope Diagram

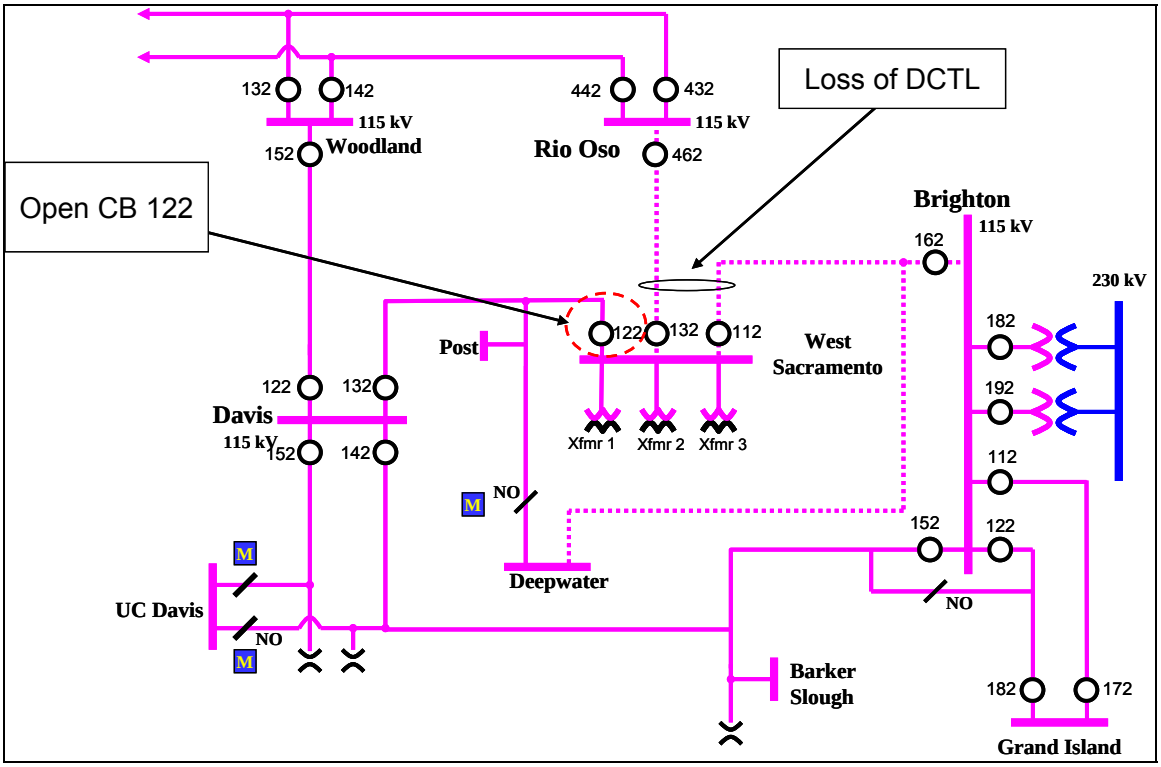

Figure 4-16: Scope Diagram

Attachment 2

Table 4-8: Demand Forecast in the Davis / West Sacramento 115 kV Area

Substation/Bank	2010 (MW)	2011 (MW)	2012 (MW)	2013 (MW)	2014 (MW)	Growth Rate (MW/yr)
DAVIS 1	30.5	31.4	32.3	33.1	34	0.88
DAVIS 2	37	38.1	39.2	37.6	36	-0.25
DAVIS 3	43.5	44.8	46.1	47.3	48.5	1.25
DEEPWATR 2	23.6	24.3	25.1	25.7	26.4	0.70
DEEPWATR 3	17.3	17.9	18.4	18.9	19.4	0.52
DIXON 1	20.6	22.6	22.9	25	25.2	1.15
DIXON 2	13.9	14.1	14.3	14.4	14.6	0.18
GRAND IS 1	18.1	18.6	19.2	19.7	20.2	0.52
GRAND IS 2	14.9	15.4	15.8	16.2	16.7	0.45
KNIGHTLD	9.4	9.4	9.4	9.3	9.3	-0.02
PLAINFLD 1	3.9	4	4	4	4	0.03
PLAINFLD 2	9.7	9.8	9.8	11.9	14.1	1.10
W.SCRMNO 1	29.9	30.8	31.7	32.5	33.3	0.85
W.SCRMNO 2	19.1	19.7	20.3	20.8	21.4	0.57
W.SCRMNO 3	33	34	35	35.9	36.8	0.95
WINTERS	6	6.1	6.2	6.3	6.4	0.10
WOODLD 1	38.7	39	39.3	39.5	39.7	0.25
WOODLD 2	46.1	46.4	46.8	47	47.3	0.30
WOODLD 3	31.4	31.7	32	32.1	32.3	0.23
ZAMORA	10	10	10	9.9	9.9	-0.02
TOTAL	**456.6**	**468.1**	**477.8**	**487.1**	**495.5**	**9.72**

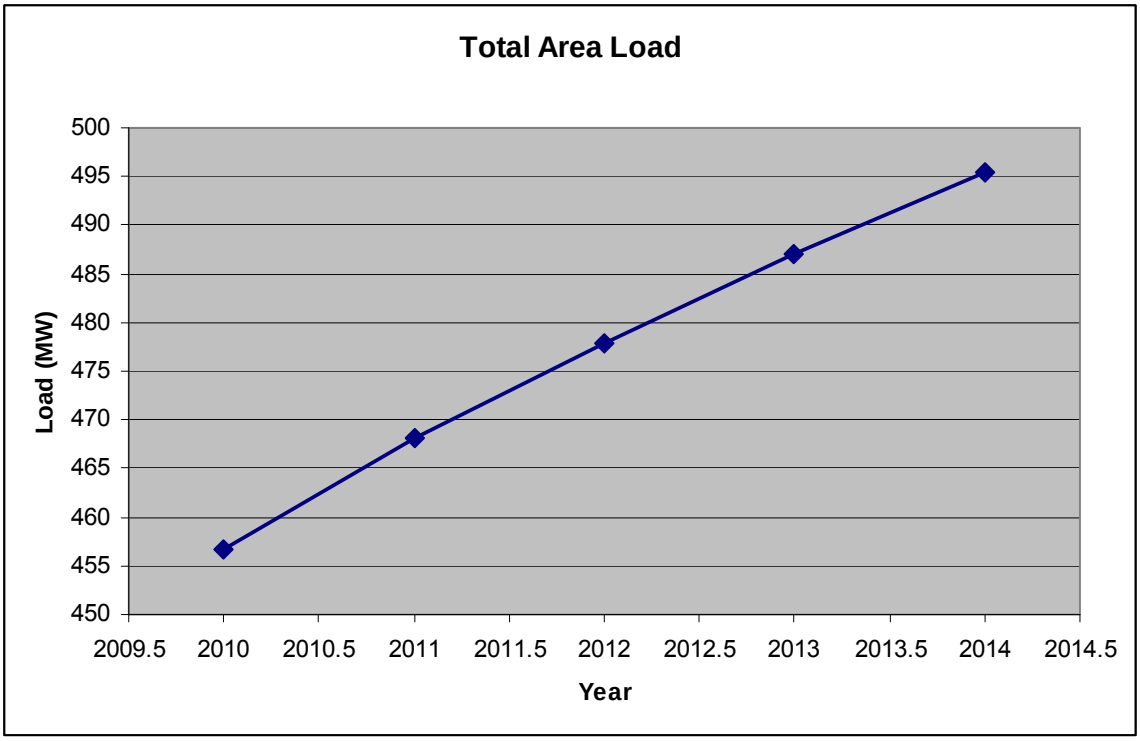

Figure 4-17: Demand Forecast Graph

Attachment 3

Table 4-9: Power Flow Results

			Pre Project						Post Project	
#	Facility	Facility Rating	2010	2011	2012	2013	2014	2019	2019	Contingency
1	Brighton – Davis 115 kV Line	SE Rating 605 Amps	130%	134%	120%	122%	126%	150%	99%	Rio Oso – West Sacramento, West Sacramento – Brighton 115 kV (L-2)
2	Deepwater 115 kV Bus Voltage	115 kV	0.93 pu	0.92 pu	0.95 pu	0.95 pu	0.94 pu	0.88 pu	0.93 pu	

Attachment 4

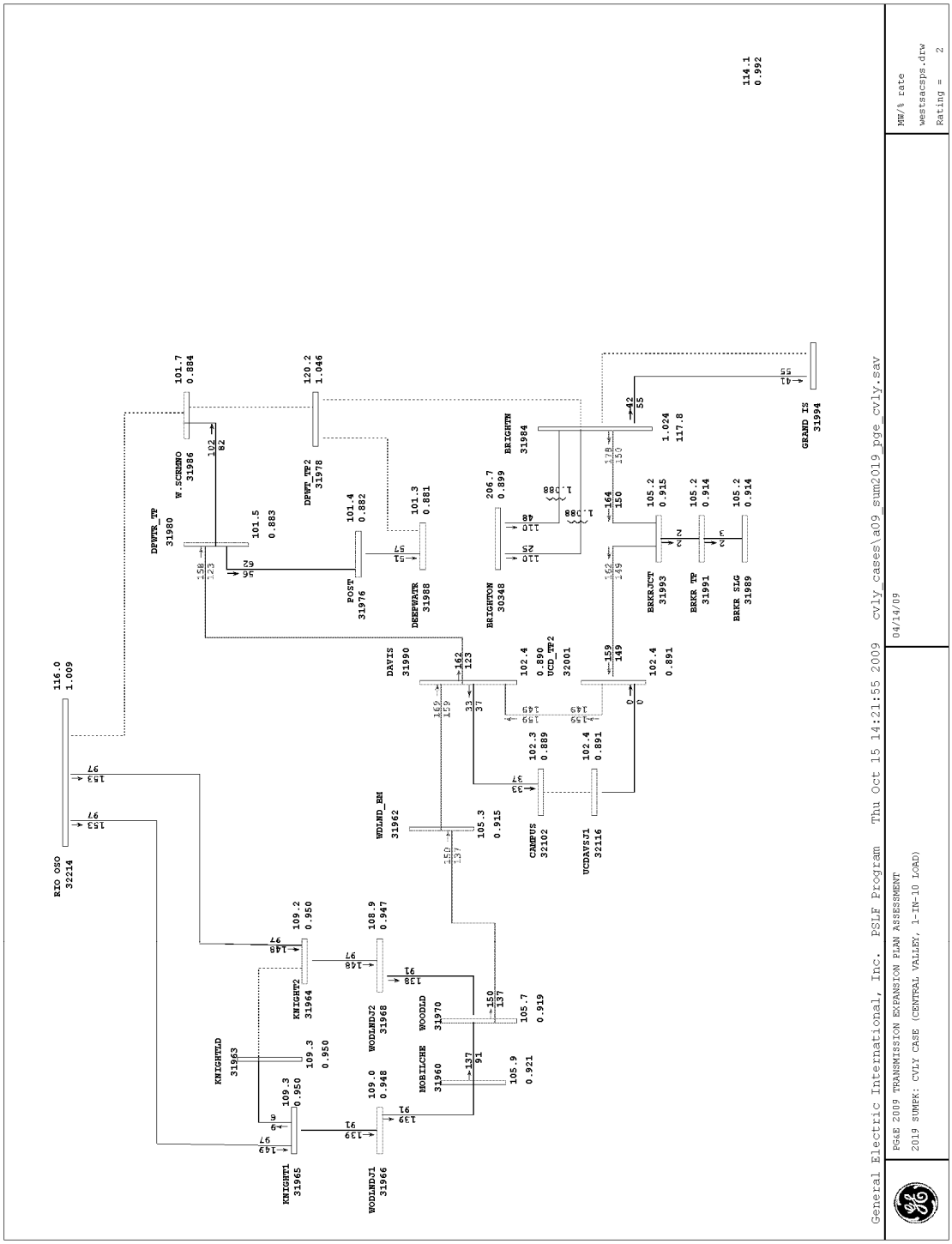

Figure 4-18: Pre Project: Rio Oso – West Sacramento and West Sacramento – Brighton (L-2)

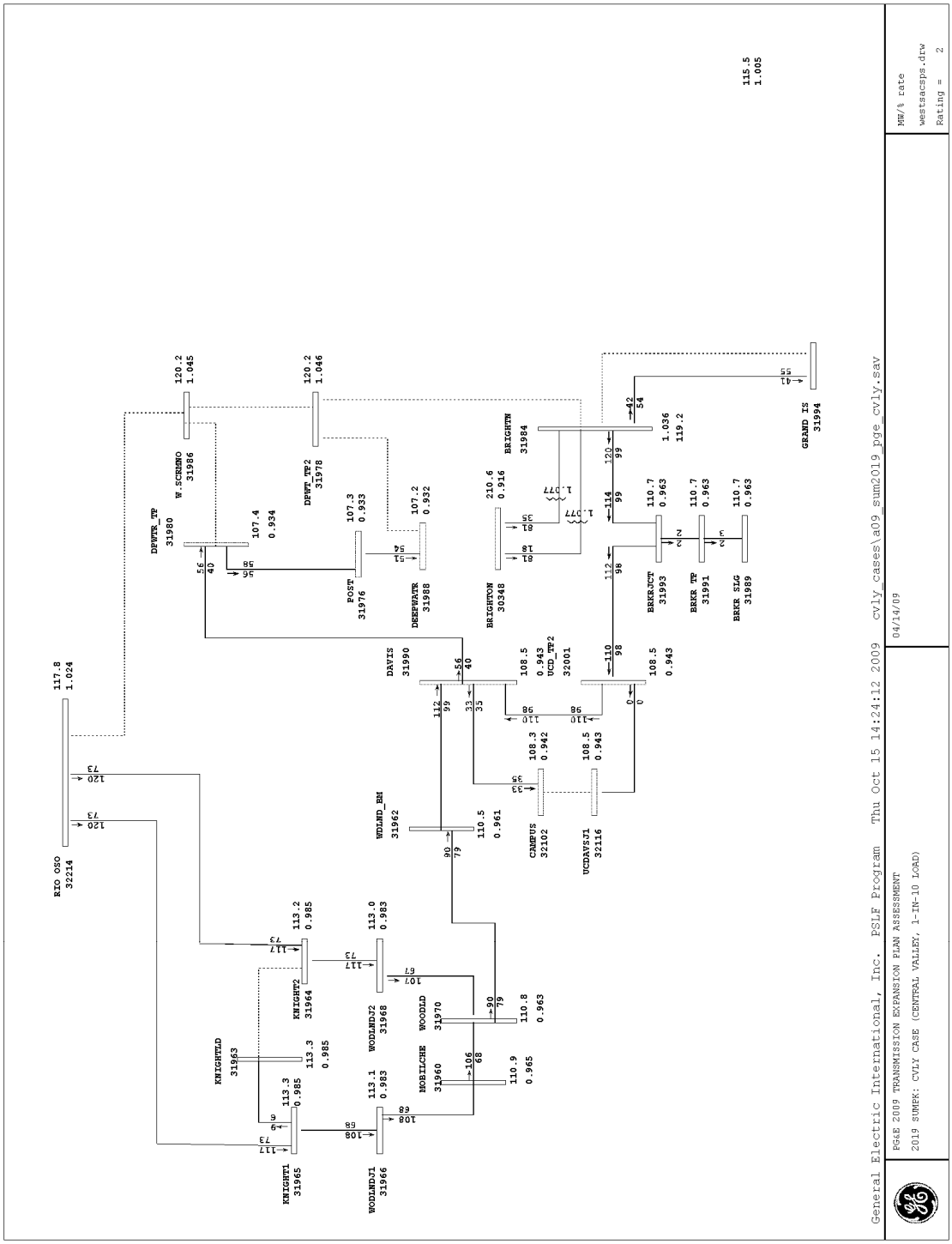

Figure 4-19: Post Project: Rio Oso – West Sacramento and West Sacramento – Brighton (L-2)

Los Padres Transmission Project

IN-SERVICE DATE

December 2010

PURPOSE AND BENEFIT

Reliability – NERC compliance.

PROJECT CLASSIFICATION

This is a new project.

DESCRIPTION AND SCOPE OF PROJECT

This project proposes to develop a manually operated switching plan or install a new special protection scheme (SPS) at Mesa and Santa Maria Substations. The switching plan or SPS at Mesa Substation would trip Mesa circuit breaker (CB) number (No.) 132 and open end the San Luis Obispo-Mesa 115 kV Line due to the loss of all 230 kV sources to Mesa. The SPS at Santa Maria Substation would trip Santa Maria CB No. 132 and open end the San Luis Obispo-Santa Maria 115 kV Line due to low voltage conditions at Mesa. This SPS will be designed to be fully redundant, as required by WECC standards.

This project is expected to cost between $1M and $2M.

BACKGROUND

The Southern Mesa 115 kV transmission system provides electric service to about 95,000 customers in San Luis Obispo and Santa Barbara County. Electric substations interconnected to the Southern Mesa 115 kV system include: Mesa, Santa Maria, Oceano, Callender Switching Station, Divide, Fairway, Sisquoc, Manville, Cabrillo, Buellton, and Santa Ynez. In addition, Vandenberg Air Force Base and Union Oil are large load transmission service customers that are electrically served to this transmission system.

Planning studies have concluded that an outage of the Morro Bay-Mesa and Diablo-Mesa 230 kV double circuit tower lines (DCTL) would result in severe low voltages below 0.80 per unit and thermal overload conditions on the San Luis Obispo-Santa Maria and San Luis Obispo-Callender Switching Station 115 kV Lines greater than 70% in 2010.

BASE CASE AND STUDY ASSUMPTIONS

PG&E used base cases and assumptions approved in the CAISO Unified Planning Assumptions and Study Plan for the 2009 Transmission Planning Process cycle.

STUDY CRITERIA

CAISO grid planning criteria
NERC Transmission Planning Reliability Standards

OTHER ALTERNATIVES CONSIDERED

Alternative 1: Status Quo

This alternative does not address the projected low voltage conditions.

Alternative 2: Build an Additional 230 kV Line from Morro Bay to Mesa

This alternative proposes to build a 35 mile long 230 kV transmission line from Morro Bay Substation to Mesa Substation. This alternative would provide a third 230 kV source into the Southern Mesa transmission system and is projected to cost between $40 million and $50 million.

PROJECT SCHEDULE

- Environmental and Permitting Processes – TBD
- Design – TBD
- Major Equipment – TBD
- Construction – TBD

KEY ISSUES

- Land-Use Restrictions – TBD
- Environmental Concerns – TBD
- Special Metering or Protection - Yes
- Common Mode Exposure Items - None
- Interaction with other Projects or Studies – None

GEPSLF MODELING INFORMATION

None required.

ATTACHMENTS

1. Scope Diagram
2. Demand Forecast
3. Power Flow Summary
4. Pre and Post Project Power Flow Plots

Attachment 1: Scope Diagram

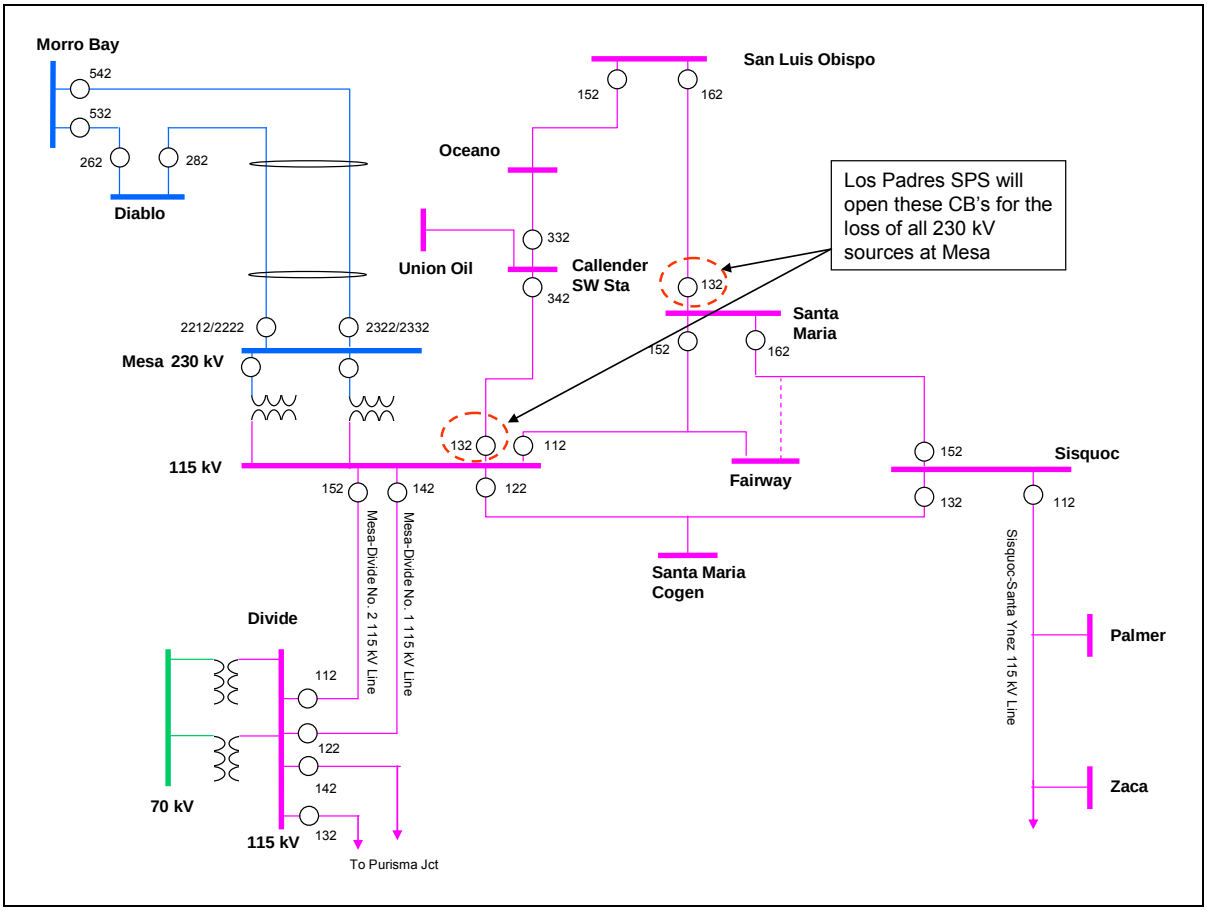

Figure 4-20: Scope Diagram

Attachment 2: Demand Forecast

Table 4-10: Demand Forecast in the Mesa 115 kV Area

Substation/Bank	2010 (MW)	2011 (MW)	2012 (MW)	2013 (MW)	2014 (MW)	Growth Rate (MW/yr)
Sisquoc #2	5.2	5.3	5.4	5.5	5.6	0.1
Sisquoc #3	6.7	6.8	6.9	7.0	7.1	0.1
Santa Maria #2	24.8	25.2	25.6	25.8	26.2	0.4
Santa Maria #3	27.0	27.5	27.9	28.2	28.6	0.4
Fairway #1	12.1	12.3	12.5	12.7	12.8	0.2
Fairway #2	20.0	20.4	20.7	20.9	21.2	0.3
Oceano #1	15.1	15.4	15.7	15.9	15.9	0.2
Oceano #2	37.9	38.7	39.3	39.7	39.7	0.5
Buellton #1	8.0	8.2	8.4	8.5	8.7	0.2
Buellton #2	10.6	10.8	11.0	11.2	11.4	0.2
Surf	10.0	10.0	10.0	10.0	10.0	0.0
Palmer	1.8	1.9	1.9	1.9	1.9	0.0
Zaca	5.6	5.8	5.9	6.0	6.1	0.1
Santa Ynez #1	7.7	7.9	8.0	8.2	8.3	0.2
Santa Ynez #2	10.1	10.3	10.5	10.7	10.9	0.2
Manville	12.5	12.5	12.5	12.5	12.5	0.0
Cabrillo	6.4	6.5	6.7	6.8	6.9	0.1
Purisima	6.4	6.5	6.7	6.8	6.9	0.1
Divide	5.4	5.5	5.5	5.6	5.7	0.1
Vandenberg Air Force	26.2	26.2	26.2	26.2	26.2	0.0
City of Lompoc	25.9	26.1	26.3	26.5	26.7	0.2
Total Area Load	285.3	289.7	293.6	296.6	299.1	3.4

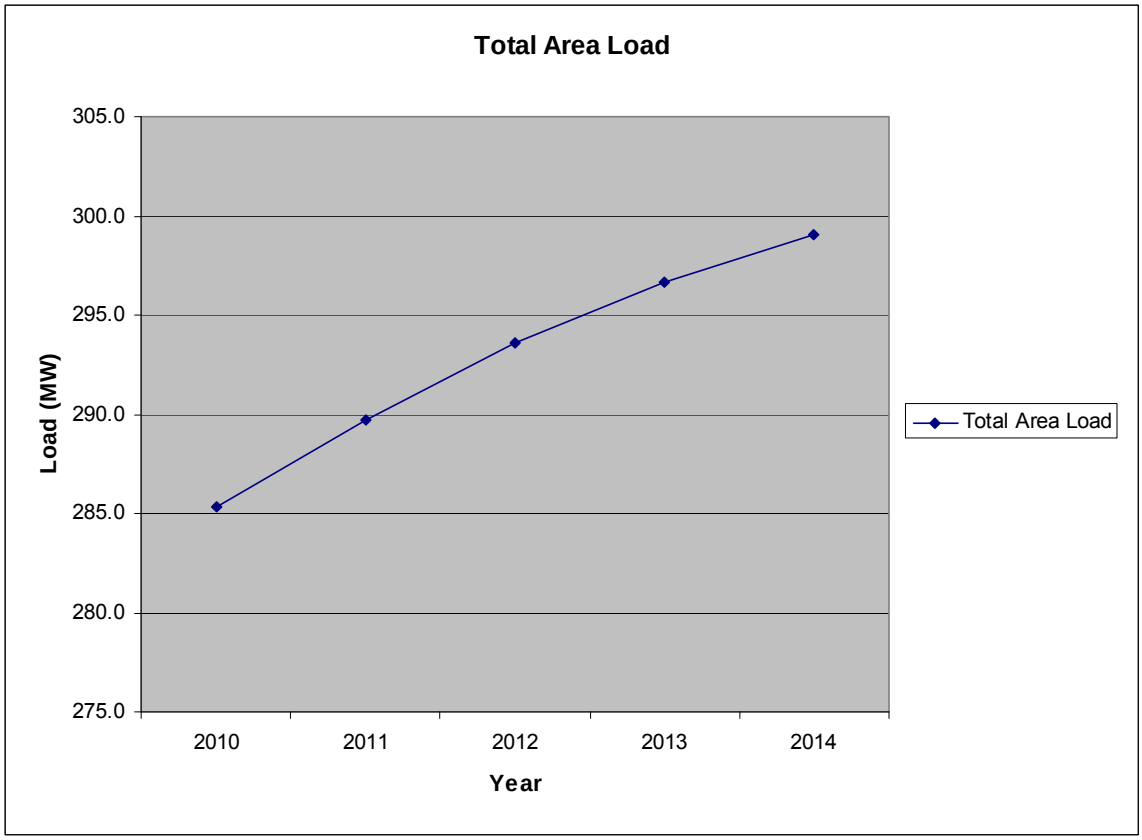

Figure 4-21: Demand Forecast Graph

Attachment 3: Power Flow Results

Table 4-11: Power Flow Results

			Pre Project						Post Project	
#	Facility	Facility Rating	2010	2011	2012	2013	2014	2019	2019	Contingency
1	Mesa 115 kV Bus Voltage	115 kV	< 0.80 p.u.						-	Morro Bay-Mesa and Diablo-Mesa 230 kV Lines (L-2)
2	San Luis Obispo-Santa Maria 115 kV Line	SE Rating 498 Amps	> 170 %						-	Morro Bay-Mesa and Diablo-Mesa 230 kV Lines (L-2)

Attachment 4: Pre and Post Project Power Flow Plots

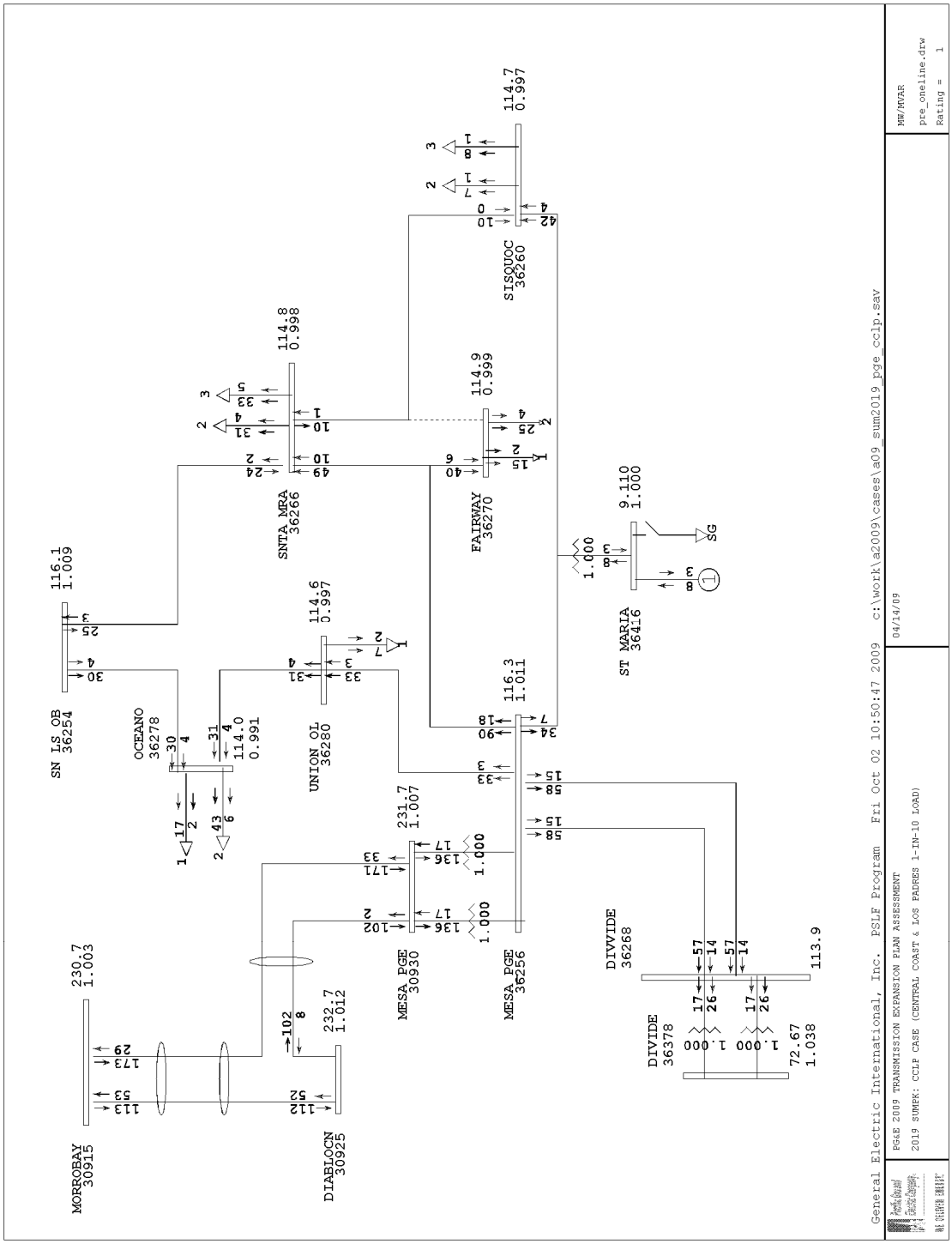

Figure 4-22: Pre Project – Normal Conditions

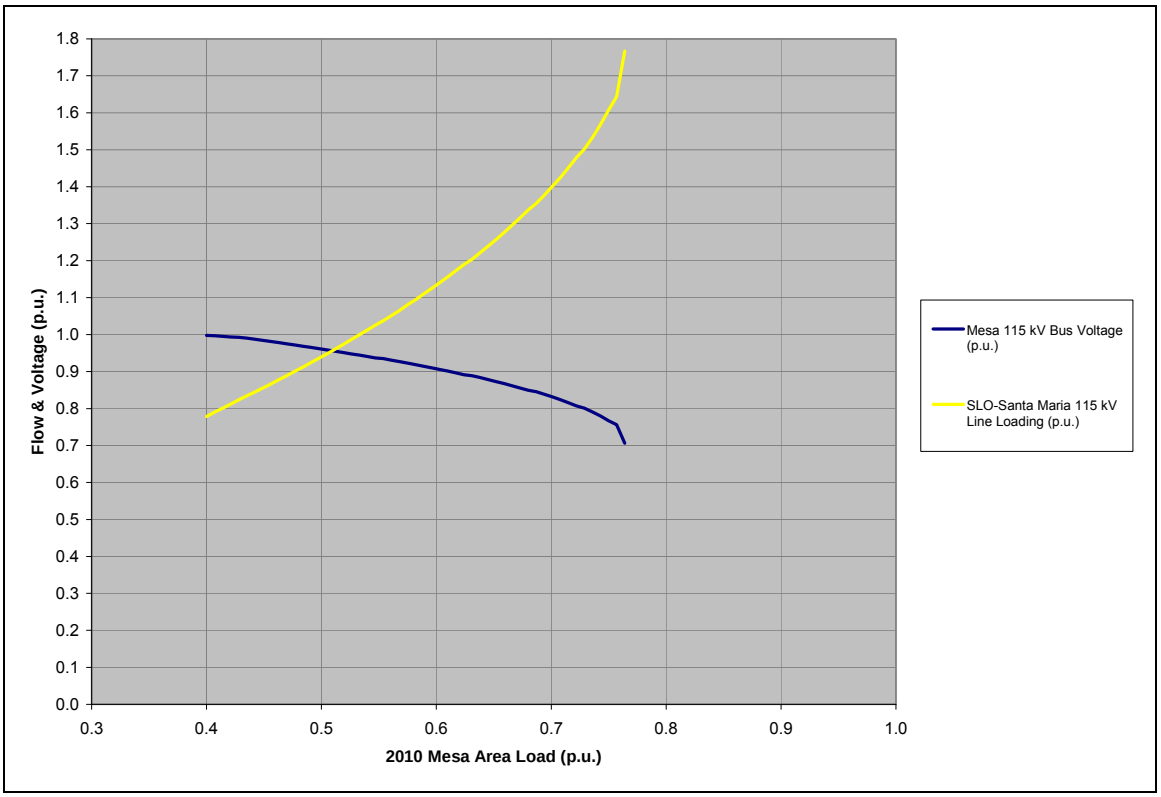

Figure 4-23: Pre Project – Morro Bay-Mesa and Diablo-Mesa 230 kV Line (L-2)

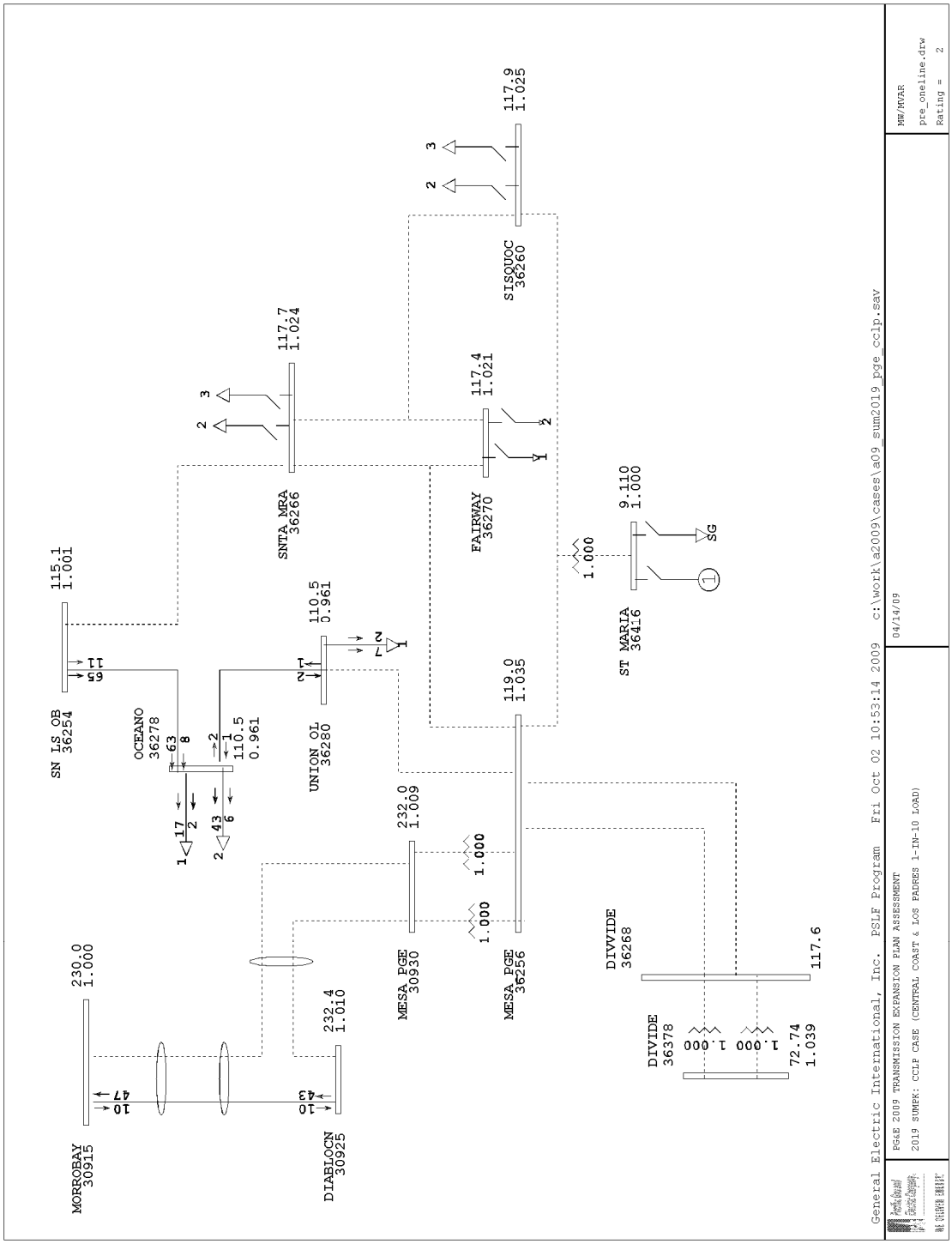

Figure 4-24: Post Project – Morro Bay-Mesa and Diablo-Mesa 230 kV Line (L-2)

2011 Projects

Moraga-Oakland "J" SPS Project

IN-SERVICE DATE

May 2011

PURPOSE AND BENEFIT

Reliability – NERC compliance.

PROJECT CLASSIFICATION

This is a new project.

DESCRIPTION AND SCOPE OF PROJECT

This project proposes to install a new special protection scheme (SPS) or development of a manually operating switching plan at Moraga and Oakland "J" Substations. The operating switching plan or SPS would trip circuit breaker (CB) number (No.) 122, 172 and 182 at Oakland "J" Substation for loss of two out of the four 115 kV lines from Moraga serving San Leandro "U" and Oakland "J " Substation. This SPS will be designed to be fully redundant, as required by WECC standards.

This project is expected to cost between $1M and $3M

BACKGROUND

Moraga Substation is located in Contra Costa County and is part of Pacific Gas and Electric's Diablo Division. Moraga Substation is a critical substation supplying power to electric customers within the Southern Oakland Area which includes the cities of Oakland, Alameda, San Lorenzo, and San Leandro. The major transmission substations in the area includes Oakland "J", San Leandro "U", Edes, NCPA's Jenny, Owen Illinois's Owens Brockway, and Domtar 115 kV Substations. All of these substations are ultimately supplied power from the Moraga 230 kV system.

Three 115 kV lines supply power to San Leandro "U" 115 kV Substation, which are the Moraga-San Leandro "U" Nos. 1, 2 and 3 115 kV Lines. The Oakland "J" 115 kV Substation is supplied by two 115 kV Lines, which are the San Leandro "U" -Oakland "J" and the Moraga-Oakland "J" 115 kV Lines. Edes Substation is a critical substation which supplies power to the Oakland International Airport via a tap off of the San Leandro-Oakland "J" 115 kV Line. NCPA's Jenny Substation is supplied from Oakland "J" Substation. The 2010 forecasted load for the area between Moraga and Oakland "J" Substations is 281 MW, with an expected growth rate of 2.75 MW per year.

Planning analysis determined that an outage of two out of the four 115 kV lines from Moraga supplying power to electric customers in the Southern Oakland Area results in potential thermal concerns for the remaining two 115 kV Lines in service. The most severe DCTL outage is loss of the Moraga-Oakland "J" and Moraga-San Leandro "U" No. 3 115 kV Lines. This results in an overload of 36% on the remaining Moraga-San Leandro "U" Nos. 1 and 2 115 kV Lines.

BASE CASE AND STUDY ASSUMPTIONS

PG&E used base cases and assumptions approved in the CAISO Unified Planning Assumptions and Study Plan for the 2009 Transmission Planning Process cycle.

STUDY CRITERIA

CAISO grid planning criteria
NERC Transmission Planning Reliability Standards

OTHER ALTERNATIVES CONSIDERED

Alternative 1: Status Quo

This alternative is not recommended. This alternative does not address the potential overload concerns.

PROJECT SCHEDULE

- Environmental and Permitting Processes – TBD
- Design – TBD
- Major Equipment – TBD
- Construction – TBD

KEY ISSUES

- Land-Use Restrictions – TBD
- Environmental Concerns – TBD
- Special Metering or Protection - None
- Common Mode Exposure Items – TBD
- Interaction with other Projects or Studies – Oakland Long Term Study

GEPSLF MODELING INFORMATION

None Required.

ATTACHMENTS

1. Scope Diagram
2. Demand Forecast
3. Power Flow Summary
4. Pre and Post Project Power Flow Plots

Attachment 1: Scope Diagram

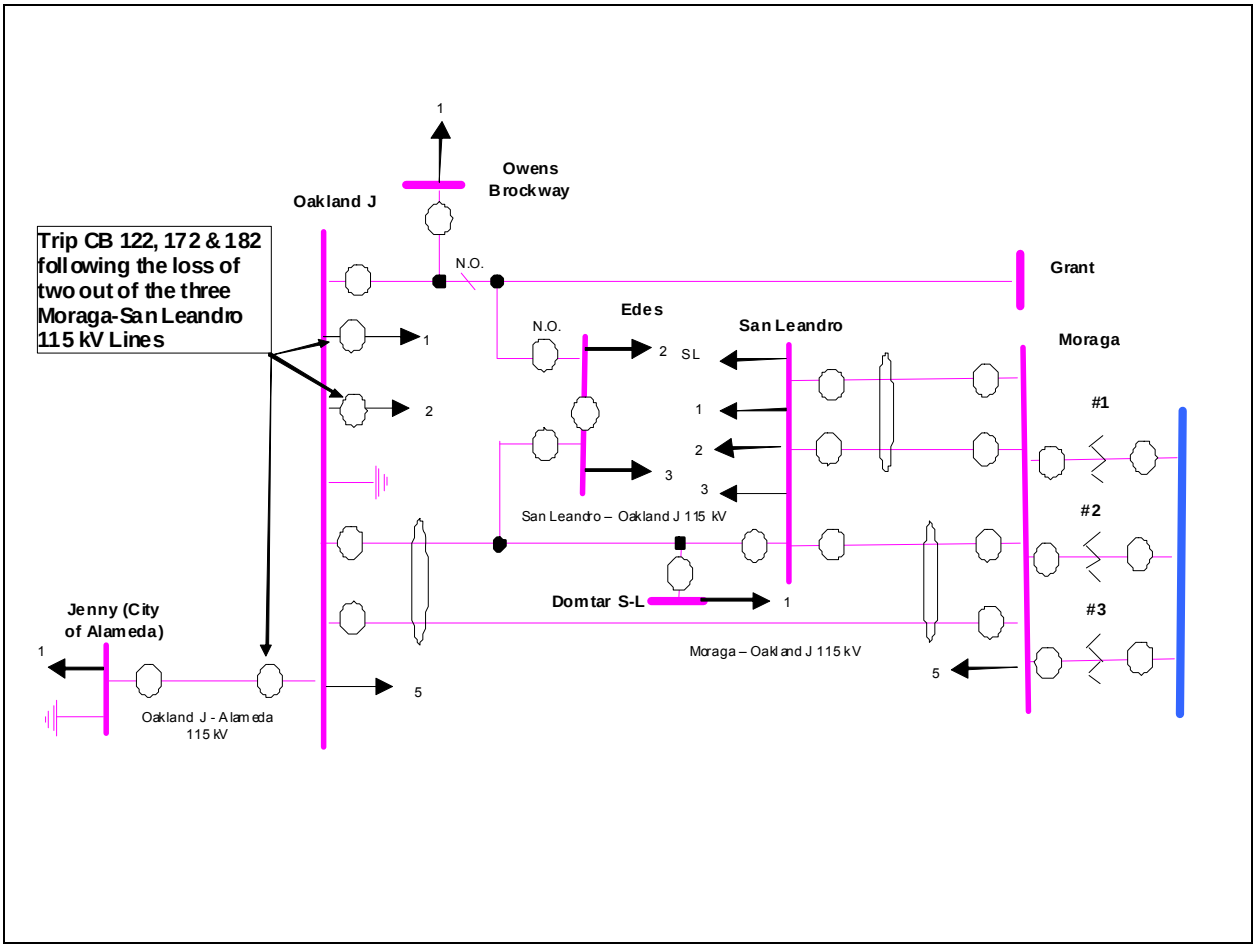

Figure 4-25: Scope Diagram

Attachment 2: Demand Forecast

Table 4-12: Demand Forecast for the Southern Oakland 115 kV Area

Substation/Bank	2010 (MW)	2011 (MW)	2012 (MW)	2013 (MW)	2014 (MW)	Growth Rate (MW/yr)
Owen Brockway	9	9	9	9	9	0
Jenny	31	31	32	32	33	0.5
Oakland J # 1	36	36	37	37	37	0.25
Oakland J # 2	24	24	24	25	25	0.25
Oakland J # 5	13	13	13	13	13	0
Edes # 2	17	17	17	17	17	0
Edes # 3	27	27	28	28	28	0.25
Domtar	4	4	4	4	4	0
San Leandro # 1	29	30	30	30	31	0.5
San Leandro # 2	34	34	34	35	35	0.25
San Leandro # 3	22	23	23	23	23	0.25
San Leandro Station Load	8	8	8	8	8	0
Moraga	27	28	28	28	29	0.5
Total Area Load	281	284	287	289	292	2.75

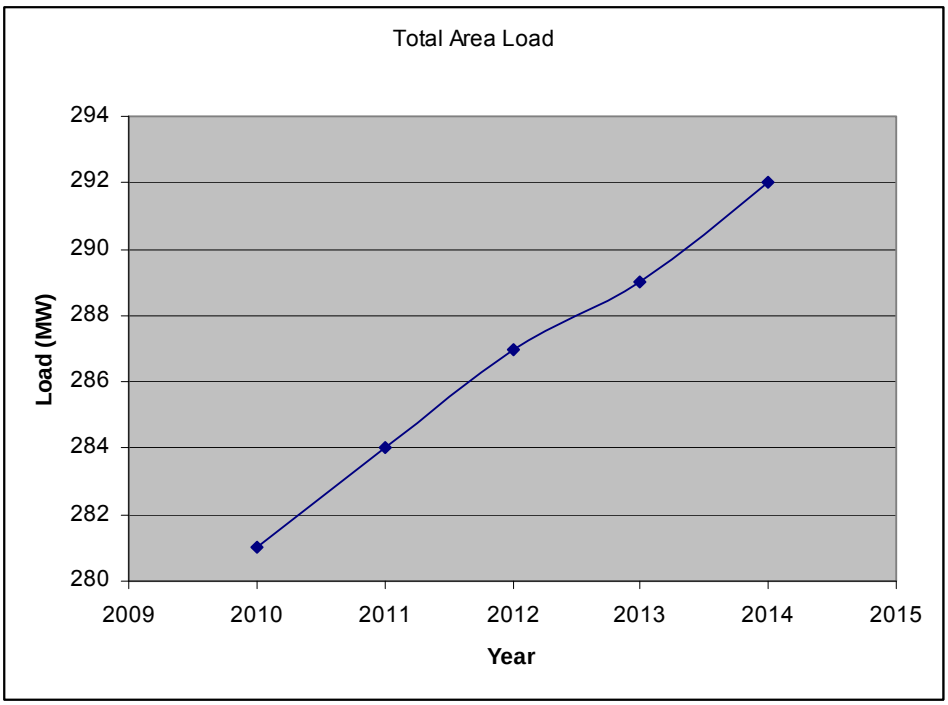

Figure 4-26: Demand Forecast Graph

Attachment 3: Power Flow Summary

Table 4-13: Power Flow Results

No.	Facility	Facility Rating	2010	2011	2012	2013	2014	2019	Contingency
1	Moraga-San Leandro" U" No. 1 115 kV Line	SE Rating 557 A	123%	122%	125%	127%	127%	135%	Outage of Moraga-Oakland "J" and Moraga-San Leandro "U" No. 3 115 kV Lines (DCTL)
2	Moraga-San Leandro" U" No. 2 115 kV Line	SE Rating 557 A	124%	123%	127%	128%	129%	136%	Outage of Moraga-Oakland "J" and Moraga-San Leandro "U" No. 3 115 kV Lines (DCTL)
3	Moraga-San Leandro" U" No. 3 115 kV Line	SE Rating 711 A	111%	109%	113%	114%	115%	120%	Outage of Moraga-San Leandro "U" Nos. 1 and 2 115 kV Line (DCTL)

Attachment 4: Pre and Post Contingency Power Flow Plots

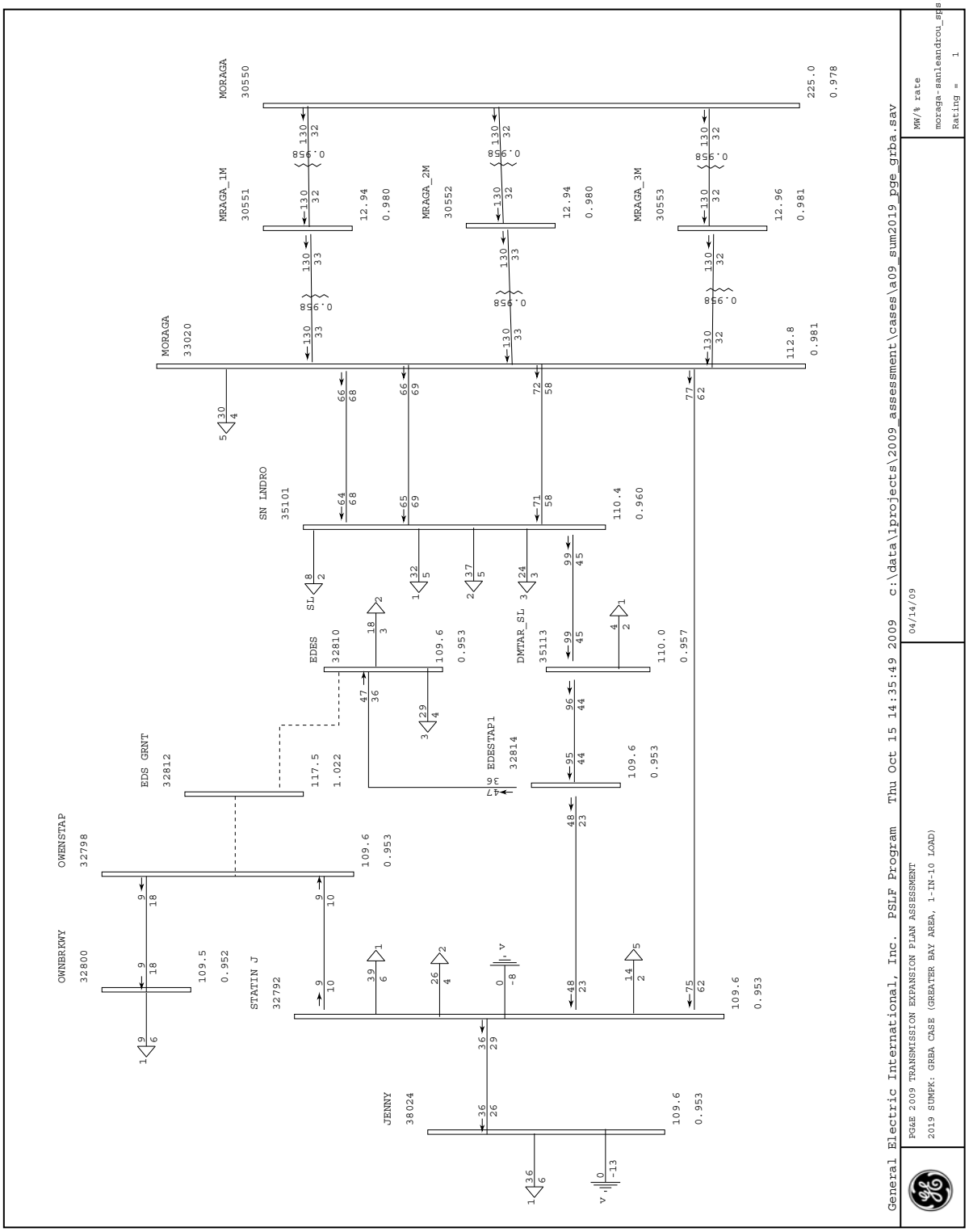

Figure 4-27: 2019 Pre Project – Normal Conditions

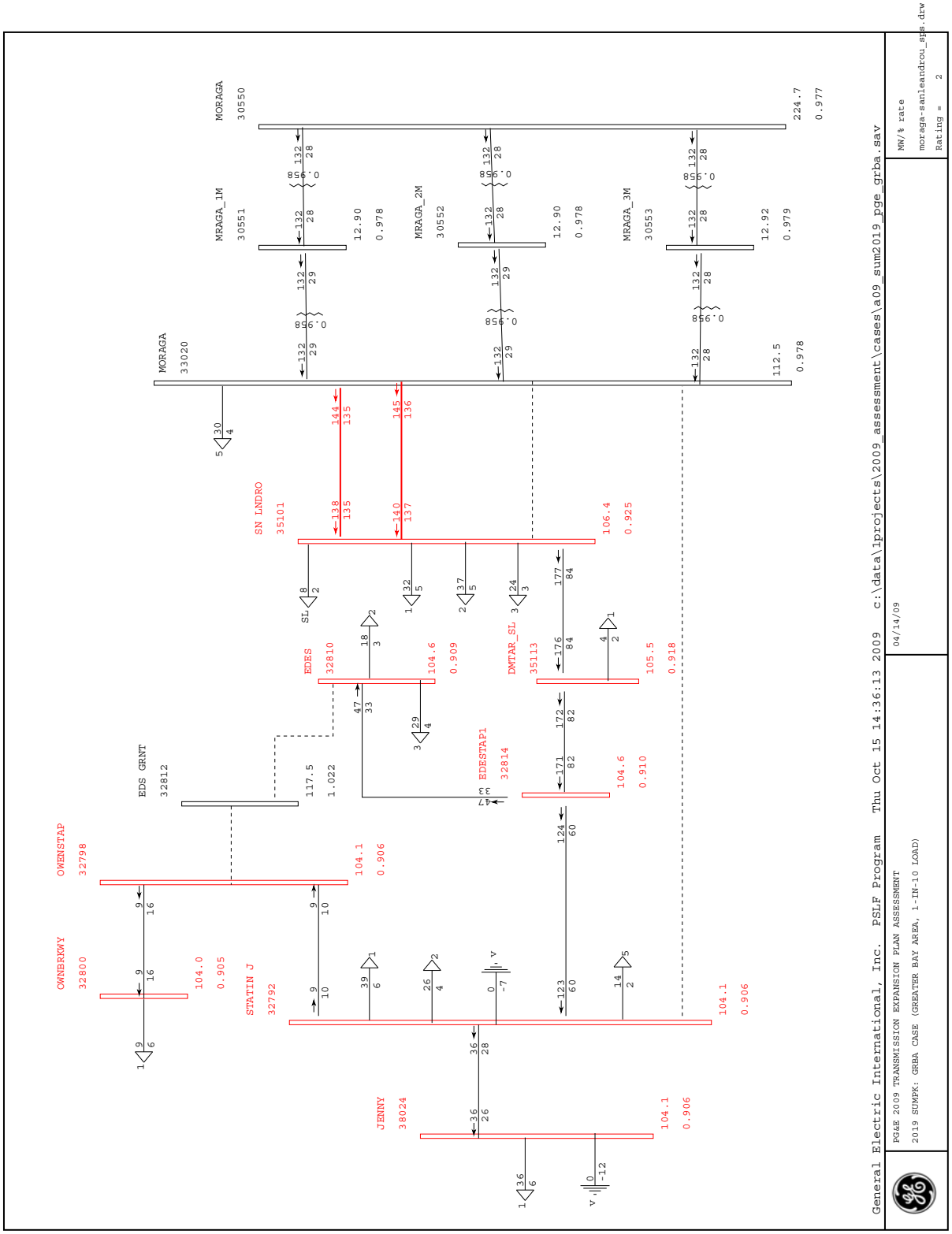

Figure 4-28: 2019 Pre Project – Outage of the Moraga-Oakland "J" and the Moraga-San Leandro "U" 115 kV Lines (L-2)

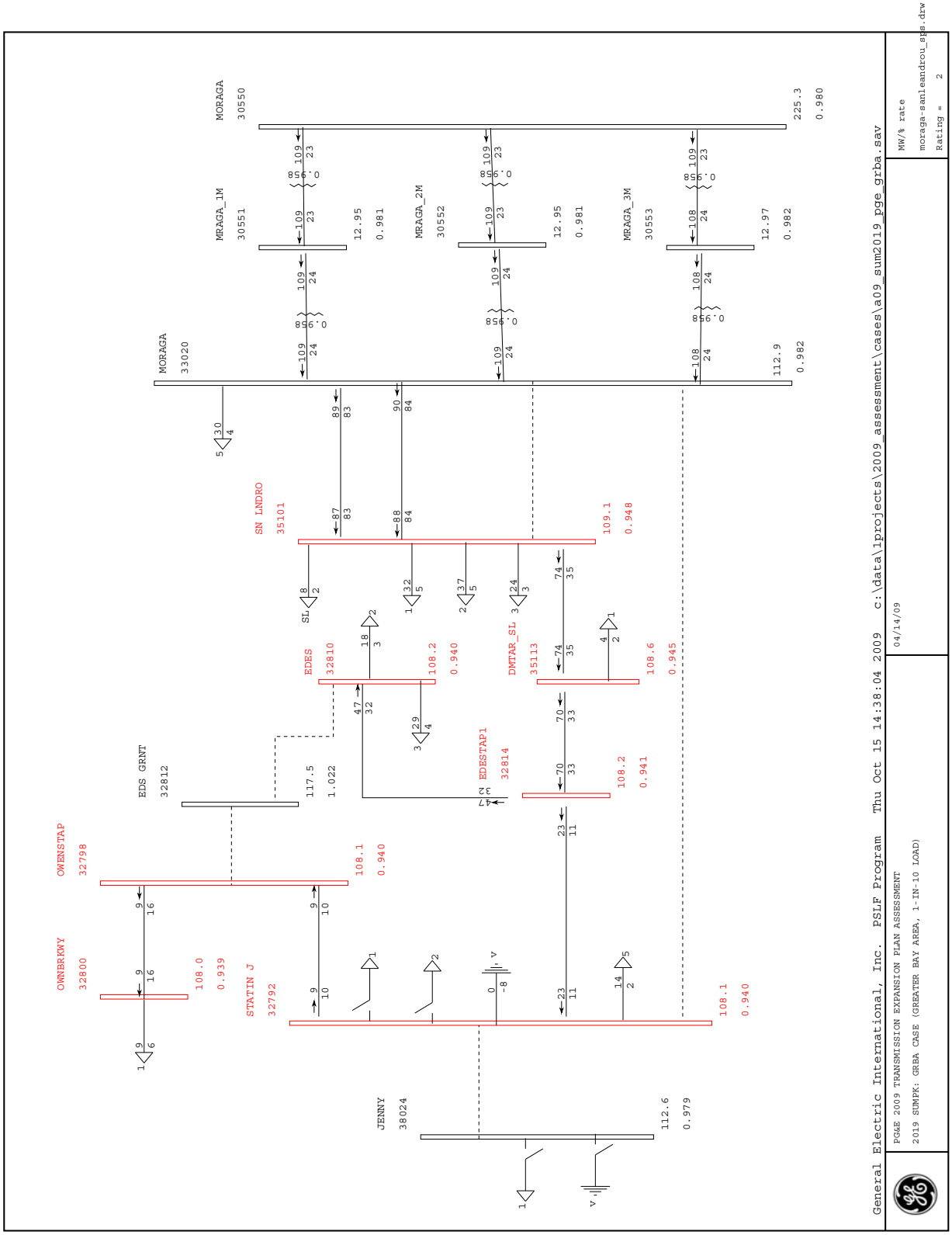

Figure 4-29: 2019 Post Project – Outage of the Moraga-Oakland "J" and the Moraga-San Leandro "U" 115 kV Lines (L-2)

Pittsburg-Lakewood SPS Project

IN-SERVICE DATE

May 2011

PURPOSE AND BENEFIT

Reliability – NERC compliance.

PROJECT CLASSIFICATION

This is a new project.

DESCRIPTION AND SCOPE OF PROJECT

This project proposes to develop a manually operated switching plan or to install a new special protection scheme (SPS) at Clayton and Lakewood Substations. The switching plan or SPS would trip circuit breaker (CB) number (No.) 386, 352 and 342 at Lakewood Substation for loss of two out of the three Pittsburg-Clayton 115 kV lines or a DCTL outage of the Lakewood-Clayton and Lakewood-Meadow Lane-Clayton 115 kV Line. This SPS will be designed to be fully redundant, as required by WECC standards.

This project is expected to cost between $1M and $3M

BACKGROUND

Lakewood and Clayton Substations are located in Contra Costa County and is part of Pacific Gas and Electric's Diablo Division. Both substations are critical in supplying power to electric customers within the Clayton Area which includes the cities of Walnut Creek, Lafayette, Orinda, Pleasant Hill, and Concord. The major transmission substations in the area include Clayton, Meadow Lane, Lakewood, EBMUD Walnut Creek PP, and Moraga Substations. Source of power for these substations are ultimately supplied from the Pittsburg and Moraga 230 kV systems.

Three 115 kV lines supply power to Clayton 115 kV Substation, which are the Pittsburg-Clayton Nos. 1, 2 and 3 115 kV Lines. Meadow Lane and EBMUD Substations are supplied power from Clayton and Lakewood substation via the Clayton-Lakewood-Meadow Lane and the Clayton-Meadow Lane 115 kV Lines. Lakewood Substation is supplied power from both Moraga and Clayton substation via the Moraga-Lakewood, the Clayton-Lakewood and the Clayton-Lakewood-Meadow Lane 115 kV Lines. The 2010 forecasted load for the area between Pittsburg and Moraga Substations is 410 MW, with an expected growth rate of 4.5 MW per year.

Planning analysis determined that an outage of two out of the three Pittsburg-Clayton 115 kV Lines supplying power to electric customers in the Clayton Area could results in a potential overload of roughly 36% for the single remaining 115 kV Line in service. In addition, a DCTL outage of the Lakewood-Clayton and the Lakewood-Meadow Lane-Clayton 115 kV Lines could also result in a 32% overload on the Moraga-Lakewood 115 kV Line by 2019.

BASE CASE AND STUDY ASSUMPTIONS

PG&E used base cases and assumptions approved in the CAISO Unified Planning Assumptions and Study Plan for the 2009 Transmission Planning Process cycle.

STUDY CRITERIA

CAISO grid planning criteria
NERC Transmission Planning Reliability Standards

OTHER ALTERNATIVES CONSIDERED

Alternative 1: Status Quo

This alternative is not recommended. This alternative does not address the potential overload concerns.

PROJECT SCHEDULE

- Environmental and Permitting Processes – TBD
- Design – TBD
- Major Equipment – TBD
- Construction – TBD

KEY ISSUES

- Land-Use Restrictions – TBD
- Environmental Concerns – TBD
- Special Metering or Protection - None
- Common Mode Exposure Items – TBD
- Interaction with other Projects or Studies – None

GEPSLF MODELING INFORMATION

None Required.

ATTACHMENTS

1. Scope Diagram
2. Demand Forecast
3. Power Flow Summary
4. Pre and Post Project Power Flow Plots

Attachment 1: Scope Diagram

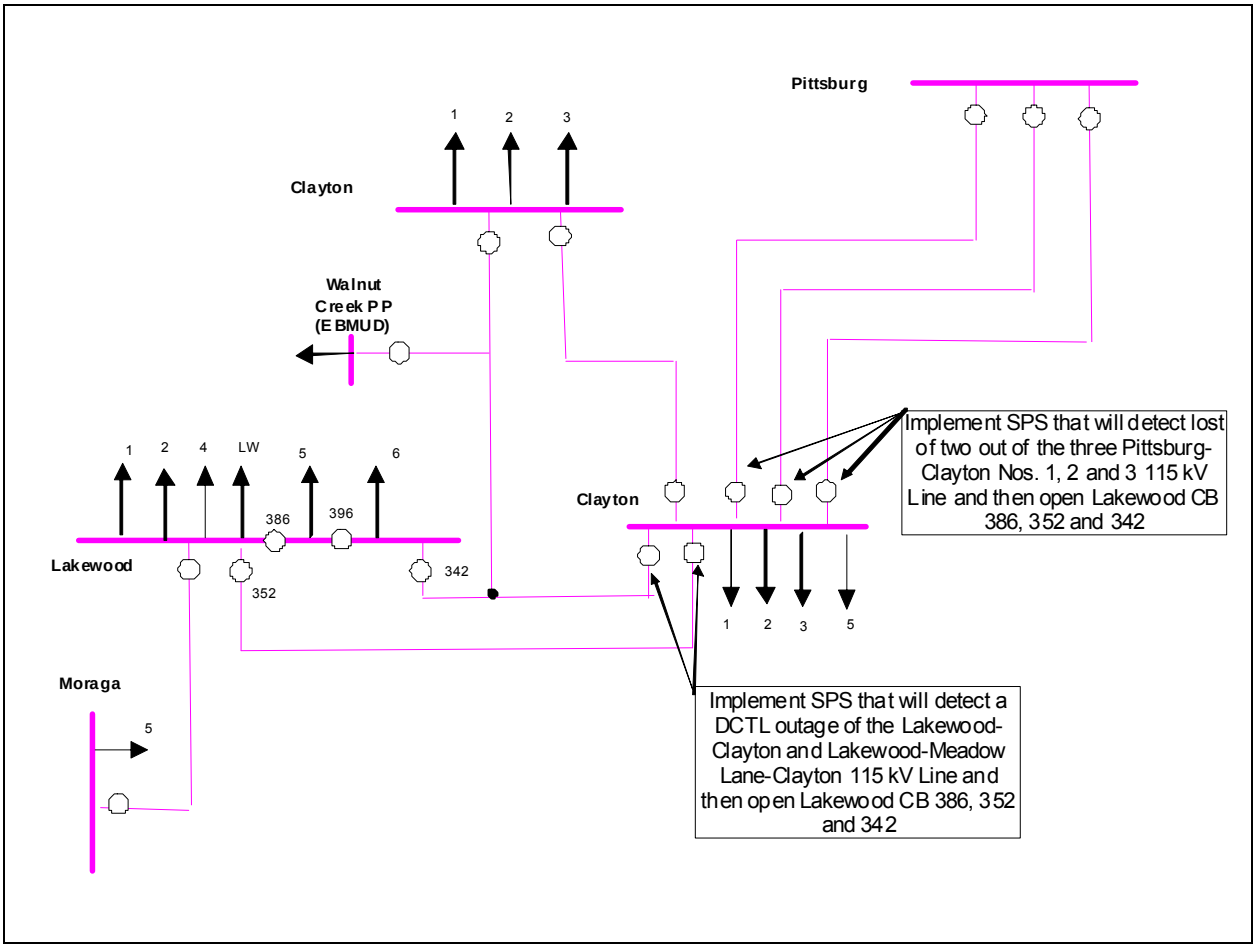

Figure 4-30: Scope Diagram

Attachment 2: Demand Forecast

Table 4-14: Demand Forecast for the Southern Oakland 115 kV Area

Substation/Bank	2010 (MW)	2011 (MW)	2012 (MW)	2013 (MW)	2014 (MW)	Growth Rate (MW/yr)
Clayton # 1	25	25	25	26	26	0.25
Clayton # 2	34	34	35	35	36	0.5
Clayton # 3	40	41	42	42	42	0.5
Clayton # 5	9	9	9	9	9	0
Meadow Lane # 1	15	15	15	15	15	0
Meadow Lane # 2	43	44	44	45	45	0.5
Meadow Lane # 3	38	39	40	40	40	0.5
EBMUD	15	15	15	15	15	0
Lakewood # 1	34	34	35	35	35	0.25
Lakewood # 2	24	24	25	25	25	0.25
Lakewood # 4	40	41	41	42	42	0.5
Lakewood # 5	19	19	20	20	20	0.25
Lakewood # 6	42	43	43	44	44	0.5
Lakewood LW	5	5	5	5	5	0
Moraga	27	28	28	28	29	0.5
Total Area Load	410	416	422	426	428	4.5

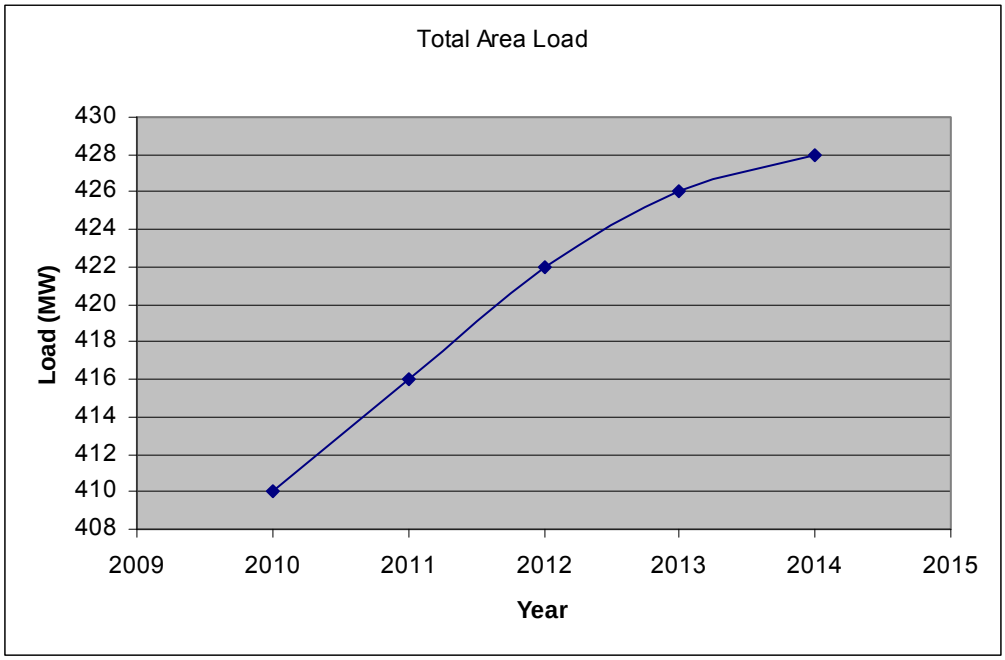

Figure 4-31: Demand Forecast Graph

Attachment 3: Power Flow Summary

Table 4-15: Power Flow Results

No.	Facility	Facility Rating	2010	2011	2012	2013	2014	2019	Contingency
1	Pittsburg-Clayton No. 1 115 kV Line	SE Rating 1762 A	110%	115%	113%	114%	115%	119%	Outage of Pittsburg-Clayton Nos. 3 and 4 115 kV Line (DCTL)
2	Pittsburg-Clayton No. 3 115 kV Line	SE Rating 1600 A	116%	121%	119%	120%	121%	126%	Outage of Pittsburg-Clayton Nos. 1 and 4 115 kV Line (L-1/L-1)
3	Pittsburg-Clayton No. 4 115 kV Line	SE Rating 1484 A	125%	123%	129%	130%	131%	136%	Outage of Pittsburg-Clayton Nos. 1 and 3 115 kV Line (L-1/L-1)
4	Moraga-Lakewood 115 kV Line (Series Reactors)	SE Rating 800 A	115%	113%	117%	118%	119%	125%	Outage of Lakewood-Clayton and Lakewood-Meadow Lane-Clayton 115 kV lines (DCTL)
5	Moraga-Lakewood 115 kV Line	SE Rating 754 A	121%	120%	124%	125%	126%	132%	Outage of Lakewood-Clayton and Lakewood-Meadow Lane-Clayton 115 kV lines (DCTL)

Attachment 4: Pre and Post Contingency Power Flow Plots

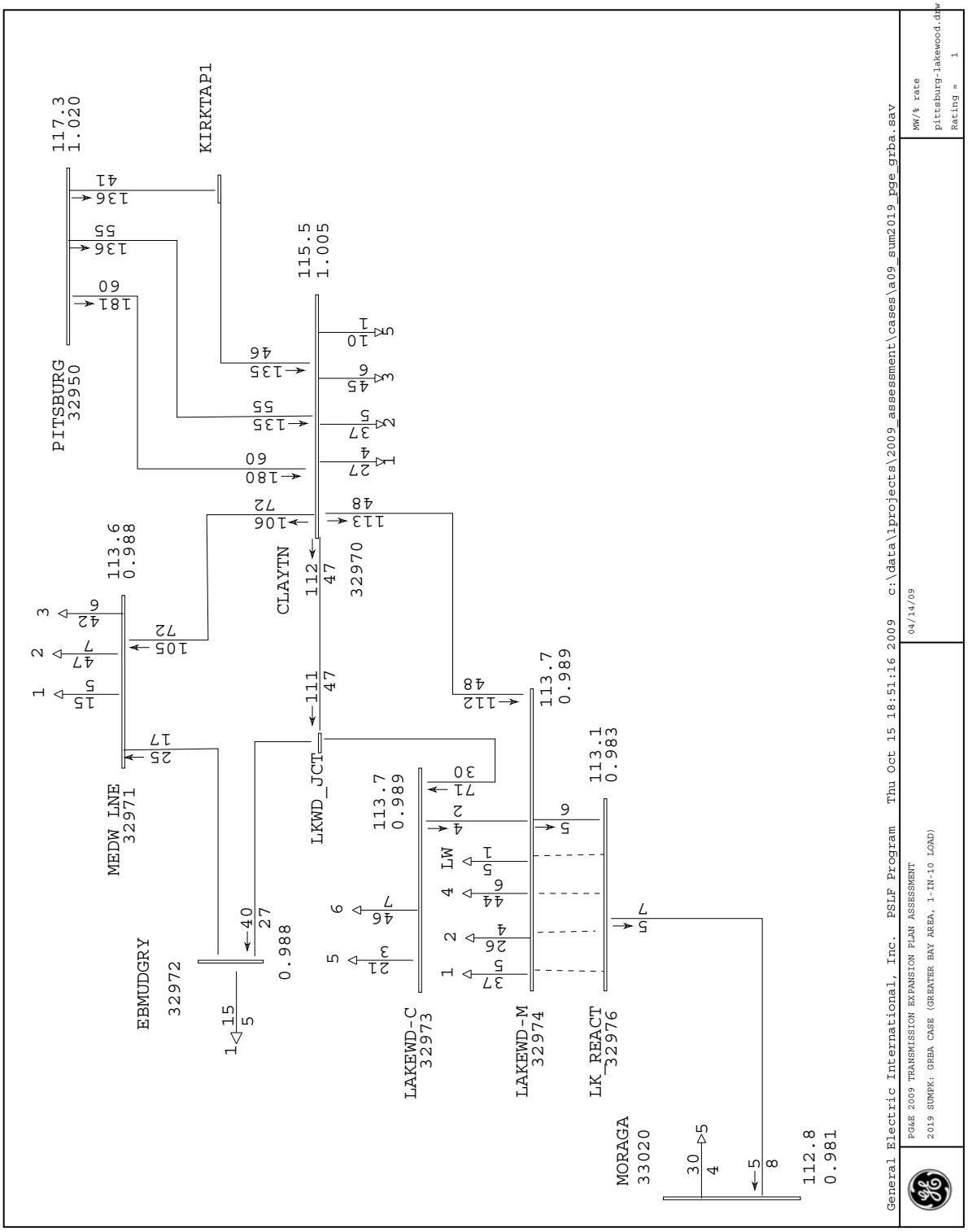

Figure 4-32: 2019 Pre Project – Normal Conditions

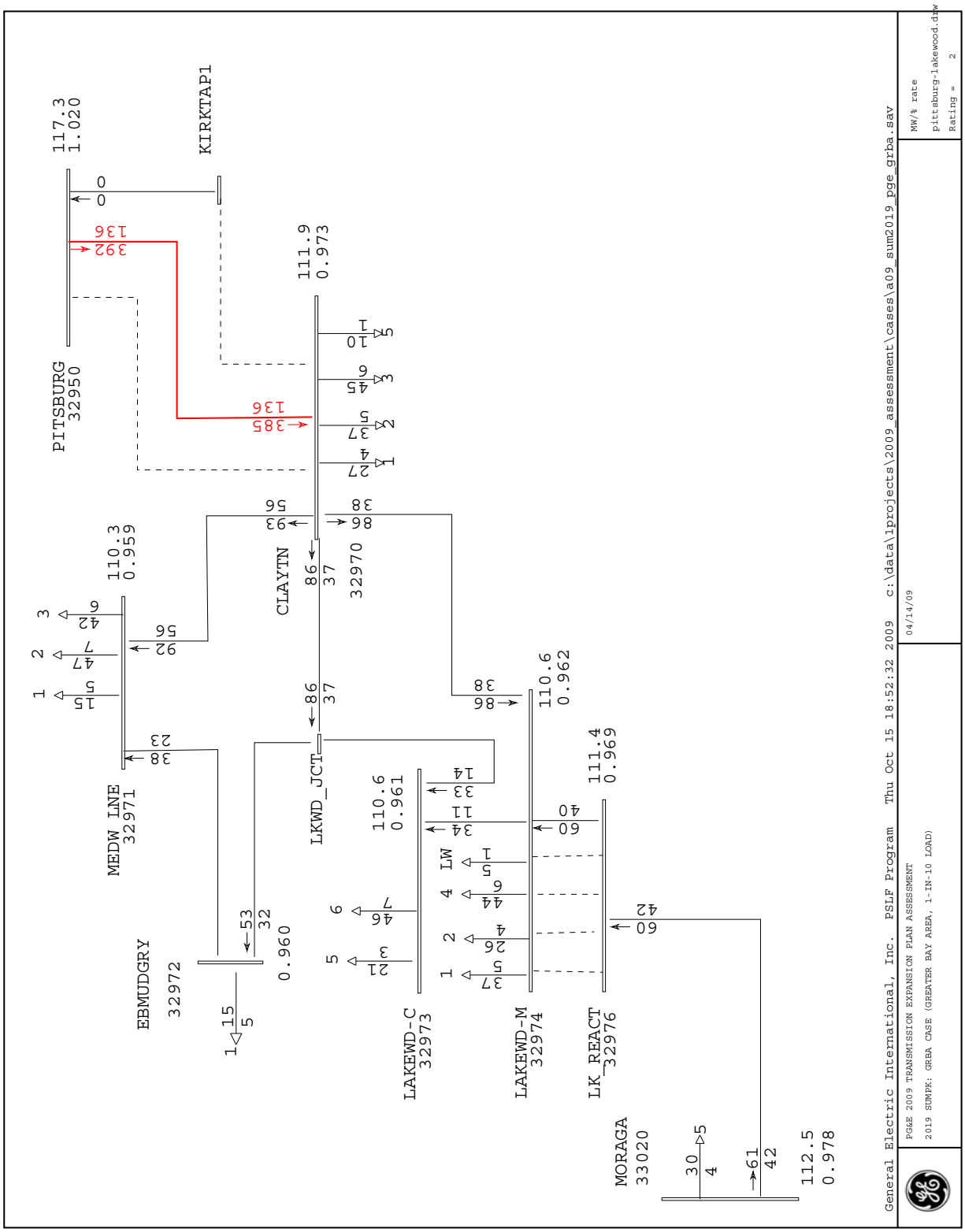

Figure 4-33: 2019 Pre Project – Outage of the Pittsburg-Calyton Nos. 1 and 3 115 kV Lines (L-1-1)

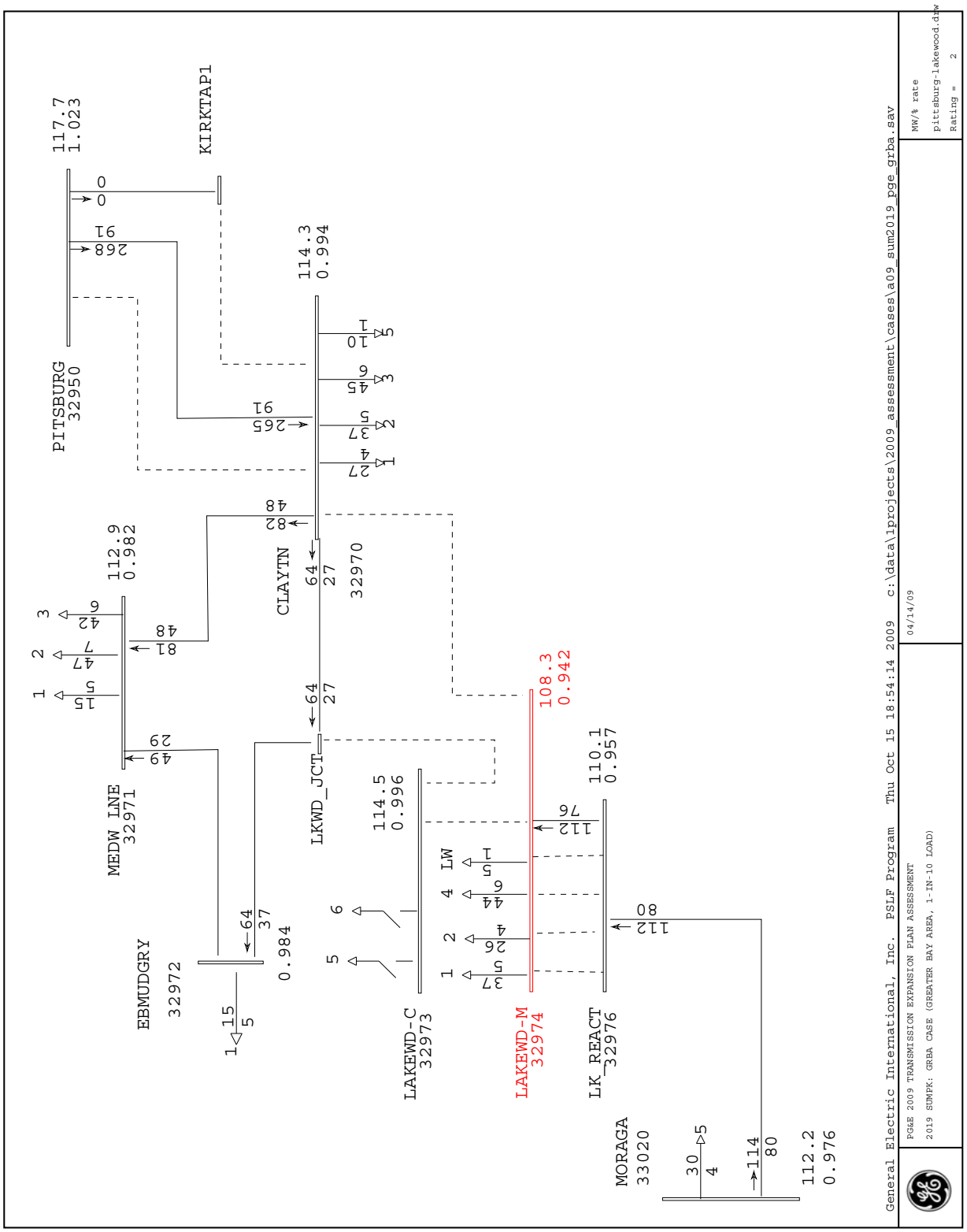

Figure 4-34: 2019 Post Project – Outage of the Pittsburg-Calyton Nos. 1 and 3 115 kV Lines (L-1-1)

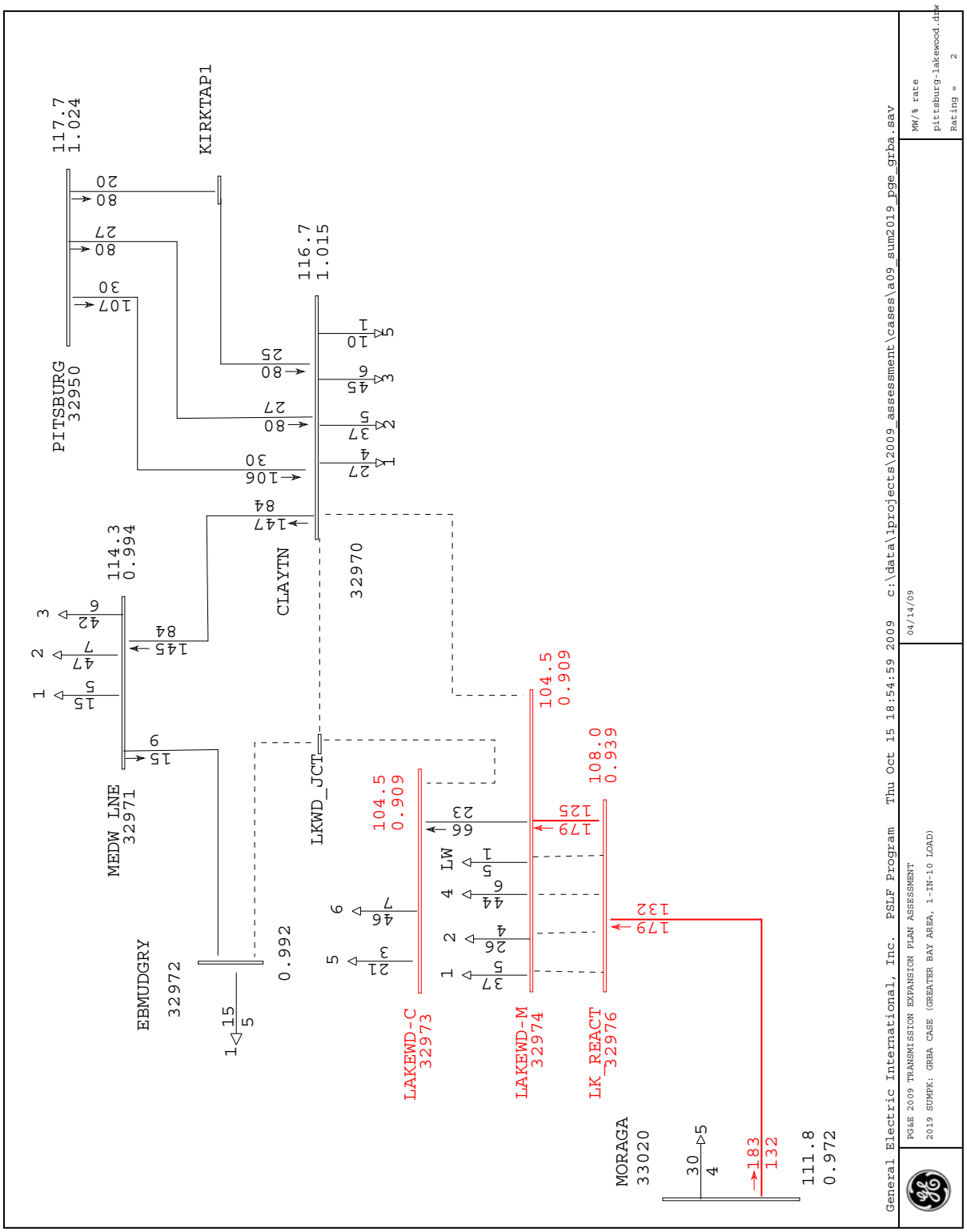

Figure 4-35: 2019 Pre Project – Outage of the Lakewood Clayton and the Lakewood-Meadow Lane-Clayton 115 kV Lines (DCTL)

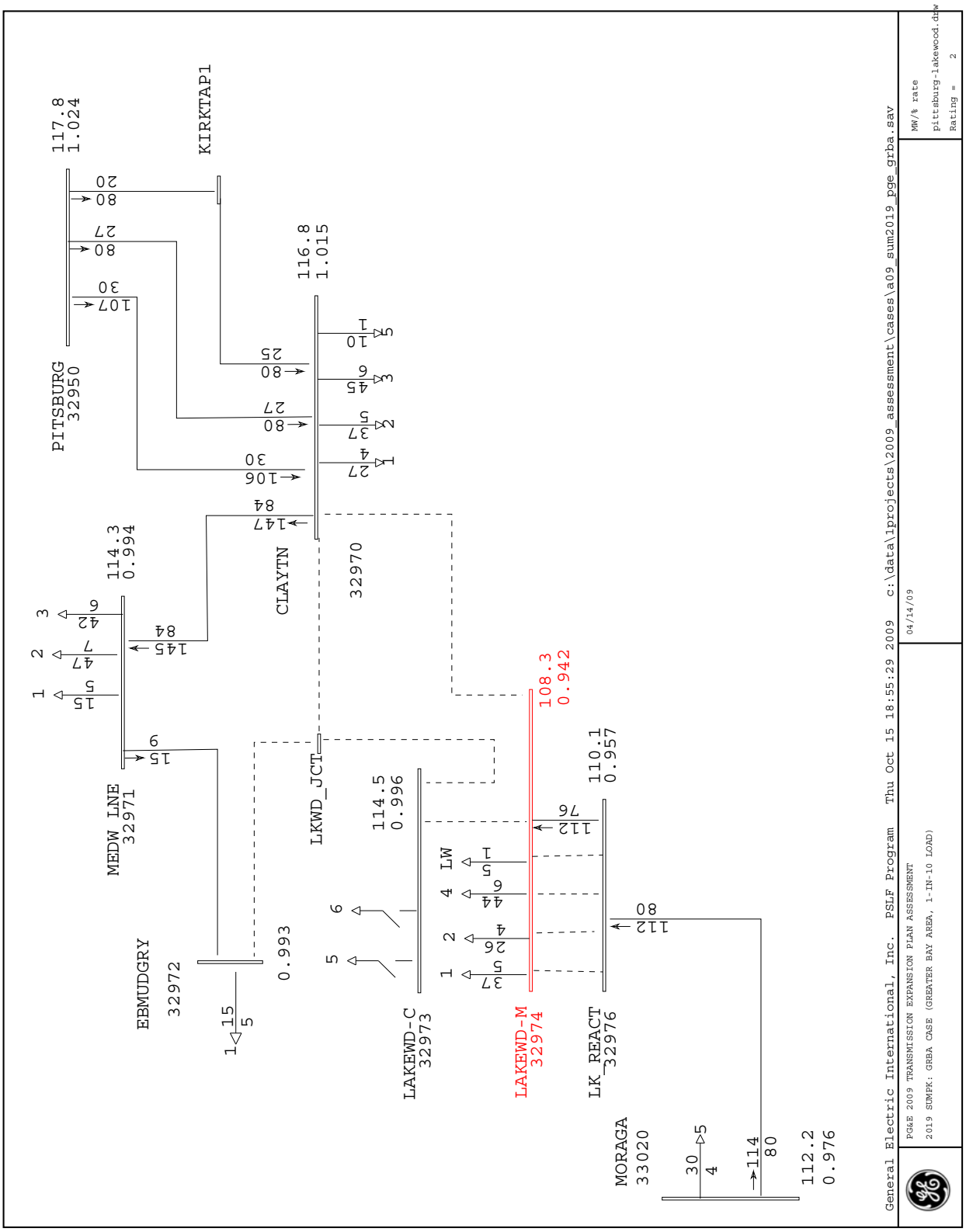

Figure 4-36: 2019 Post Project – Outage of the Lakewood Clayton and the Lakewood-Meadow Lane-Clayton 115 kV Lines (DCTL)

Stockton 'A' – Weber 60 kV Line No. 1 and 2 Reconductor

TARGETED IN-SERVICE DATE

May 2011

PURPOSE AND BENEFIT

Reliability – NERC Compliance

PROJECT CLASSIFICATION

This is a new project.

DESCRIPTION AND SCOPE OF PROPOSED PROJECT

The project scope is to:

- Reconductor the Stockton 'A'-Santa Fe and Santa Fe-Weber sections of the Stockton 'A'-Weber 60 kV Line Nos. 1 and 2 (4.4 miles each with 2.6 miles of 336 AAC, 1.5 miles of #2/0 CU, and 0.3 miles of 397 AAC conductors for a total of 8.8 miles between the two lines) with a conductor rated at least 700 Amps emergency.
- Upgrade all other associated line equipment to achieve the maximum conductor rating

This project is expected to cost between $5M and $10M.

BACKGROUND

Weber Substation serves electric customers in San Joaquin County, some of which through the Stockton 'A'-Weber 60 kV Line Nos. 1 and 2. The loads primarily fed by these lines include Stockton 'A', Cal Cedar, Stockton Wastewater, Pacific Ethanol, Rough & Ready, Port of Stockton, Channel, Monarch, Harding, and Stockton Acres. The 2010 projected total peak load for these substations is approximately 49 MW and is forecast to increase at a rate of 0.7 MW or 1.4% per year. The majority of the customers served by these lines are industrial customers.

The Stockton 'A'-Santa Fe and Santa Fe-Weber sections of each of these lines have approximately 4.4 miles total with 2.6 miles of 336 AAC, 1.5 miles of #2/0 CU, and 0.3 miles of 397 AAC conductors. Both lines have been re-rated to 4 fps for 2009 and beyond. The sections going towards Stagg and Manteca have been normally opened to prevent voltage and capacity issues on these lines.

The Stockton 'A'-Weber 60 kV Line No. 1 overloads by 3% in 2011 following an outage of the Stockton 'A'-Weber 60 kV Line No.2. It also overloads by 4% in 2019 under normal conditions. The Stockton 'A'-Weber 60 kV Line No. 2 overloads by 1% in 2019 following an outage of the Stockton 'A'-Weber 60 kV Line No. 1. These conditions are expected to occur because Cogeneration National (POSDEF) will be out of service, Port of Stockton increases its load, and the new load at Pacific Ethanol was connected.

BASE CASE AND STUDY ASSUMPTIONS

PG&E used base cases and assumptions approved in the CAISO Unified Planning Assumptions and Study Plan for the 2009 Transmission Planning Process cycle.

STUDY CRITERIA

CAISO grid planning criteria
NERC Transmission Planning Reliability Standards

OTHER ALTERNATIVES CONSIDERED

Alternative 1: Status Quo

This alternative is not recommended because it does not reduce the customer outage minutes in this area.

PROJECT SCHEDULE

- Environmental and Permitting Processes – TBD
- Design – TBD
- Major Equipment – Conductors
- Construction – TBD
- Operation Date – May 2011

KEY ISSUES

- Land-Use Restrictions – There are no land-use restrictions with this project.
- Environmental Concerns – TBD
- Special Metering or Protection – TBD
- Common Mode Exposure Items – None
- Interaction with other Projects or Studies – None

GEPSLF MODELING INFORMATION

```
##########################################################################################
#Reconductor the Stockton 'A' - Weber 60 kV Line Nos. 1 and 2 to 4 fps
#
#Notes:  Transmission switches on these circuits have 600a ratings and will need to be replaced to
#                        switches rated at least 800A along with reconductoring the lines
#
#Stockton 'A' - Weber #1 60 kV Line
OLDSECDD  33662, 33654, CKT=1, STATUS=1, RPU=0.01059004, XPU=0.05301308, +
                        BPU=0.00056068, MVA1=66, MVA2=77, MVA3=101, MVA4=108          #Santa Fe-Weber section
OLDSECDD  33654, 33670, CKT=1, STATUS=1, RPU=0.00715434, XPU=0.03581418, +
                        BPU=0.00037878, MVA1=66, MVA2=77, MVA3=101, MVA4=108          #Stockton 'A'-Santa Fe section
#
#
#Stockton 'A' - Weber #2 60 kV Line
OLDSECDD  33662, 33658, CKT=1, STATUS=1, RPU=0.01059004, XPU=0.05301308, +
                        BPU=0.00056068, MVA1=66, MVA2=77, MVA3=101, MVA4=108          #Santa Fe-Weber section
OLDSECDD  33658, 33670, CKT=1, STATUS=1, RPU=0.00715434, XPU=0.03581418, +
                        BPU=0.00037878, MVA1=66, MVA2=77, MVA3=101, MVA4=108          #Stockton 'A'-Santa Fe section
##########################################################################################
```

MISCELLANEOUS DATA

- PG&E will construct, own, and finance the project
- PG&E will be the planned operator of the project

ATTACHMENTS

1. Scope Diagram
2. Demand Forecast
3. Power Flow Summary
4. Pre and Post Project Power Flow Plots

Attachment 1: Scope Diagram

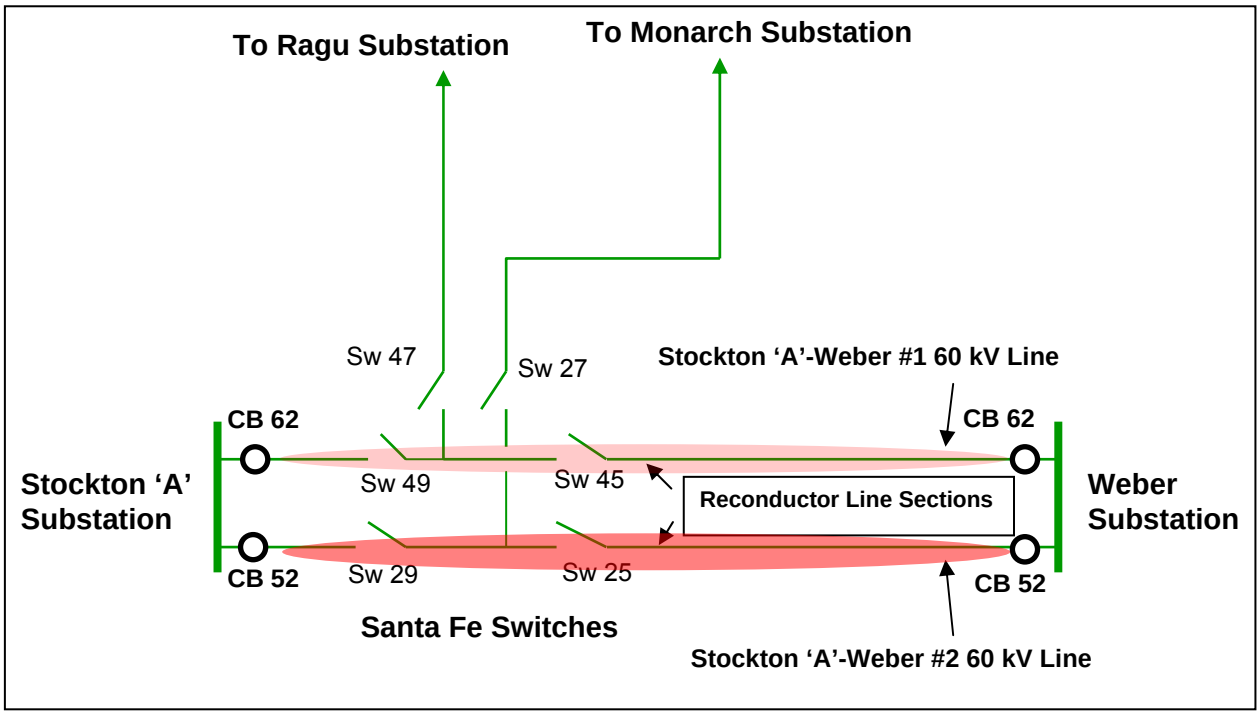

Figure 4-37: Scope Diagram

Attachment 2: Demand Forecast

Table 4-16: Demand Forecast

Substation	2010 (MW)	2011 (MW)	2012 (MW)	2013 (MW)	2014 (MW)	Growth Rate (MW/Year)
Stockton 'A'	3.2	3.2	3.4	3.4	3.6	0.10
Harding	9.5	9.7	10.1	10.3	10.5	0.25
Monarch	4.2	4.4	4.5	4.6	4.7	0.13
Cal Cedar	1.6	1.6	1.6	1.6	1.6	0
Stockton Wastewater	3.9	3.9	3.9	3.9	3.9	0
Pacific Ethanol	9	9	9.1	9.1	9.1	0.02
Rough & Ready	9	9.3	9.5	9.7	9.9	0.23
Port of Stockton	9	9	9	9	9	0
Totals	49.4	50.1	51.1	51.6	52.3	0.73

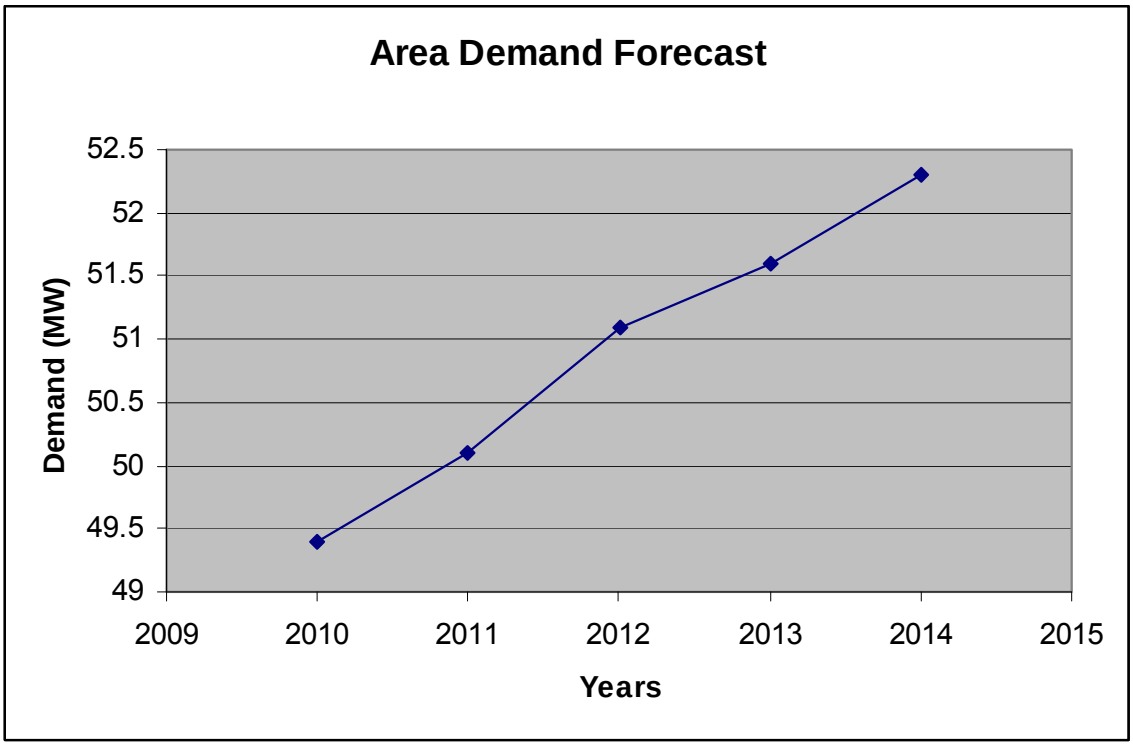

Figure 4-38: Plot of Demand Forecast

Attachment 3: Power Flow Summary

Table 4-17: Power Flow Summary

Contingency	Facility Affected	2011 (Pre-Project)	2012 (Pre-Project)	2013 (Pre-Project)	2014 (Pre-Project)	2014 (Post-Project)
Normal	Stockton 'A' – Weber #1 60 kV Line	95%	97%	98%	99%	73%
Stockton 'A' – Weber #2 60 kV Line (L-1)	Stockton 'A' – Weber #1 60 kV Line	103%	105%	106%	107%	81%
Stockton 'A' – Weber #1 60 kV Line (L-1)	Stockton 'A' – Weber #2 60 kV Line	90%	92%	93%	95%	71%

Attachment 4: Pre and Post Power Flow Plots Summary

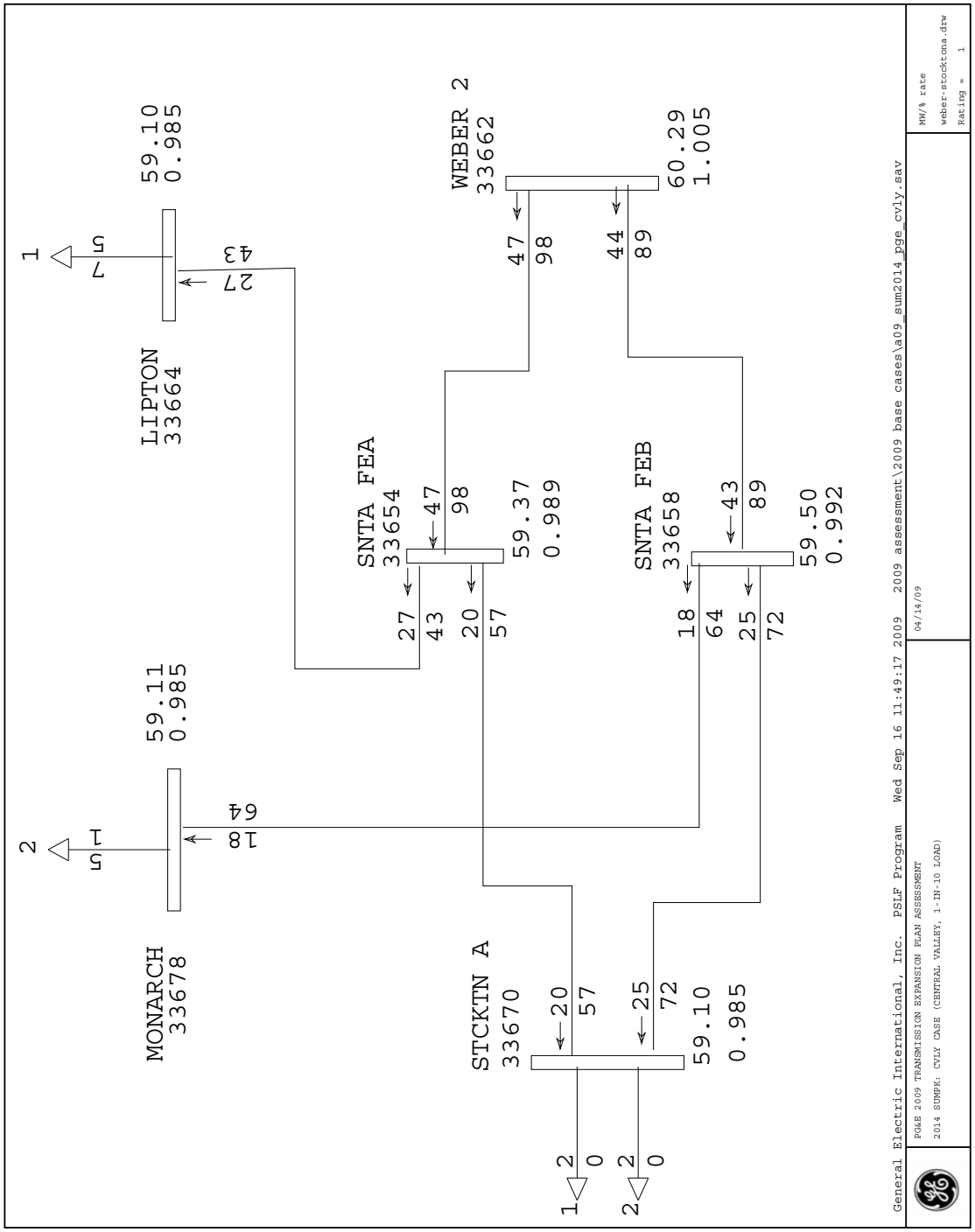

Figure 4-39: Pre-Project – 2014 Normal Conditions

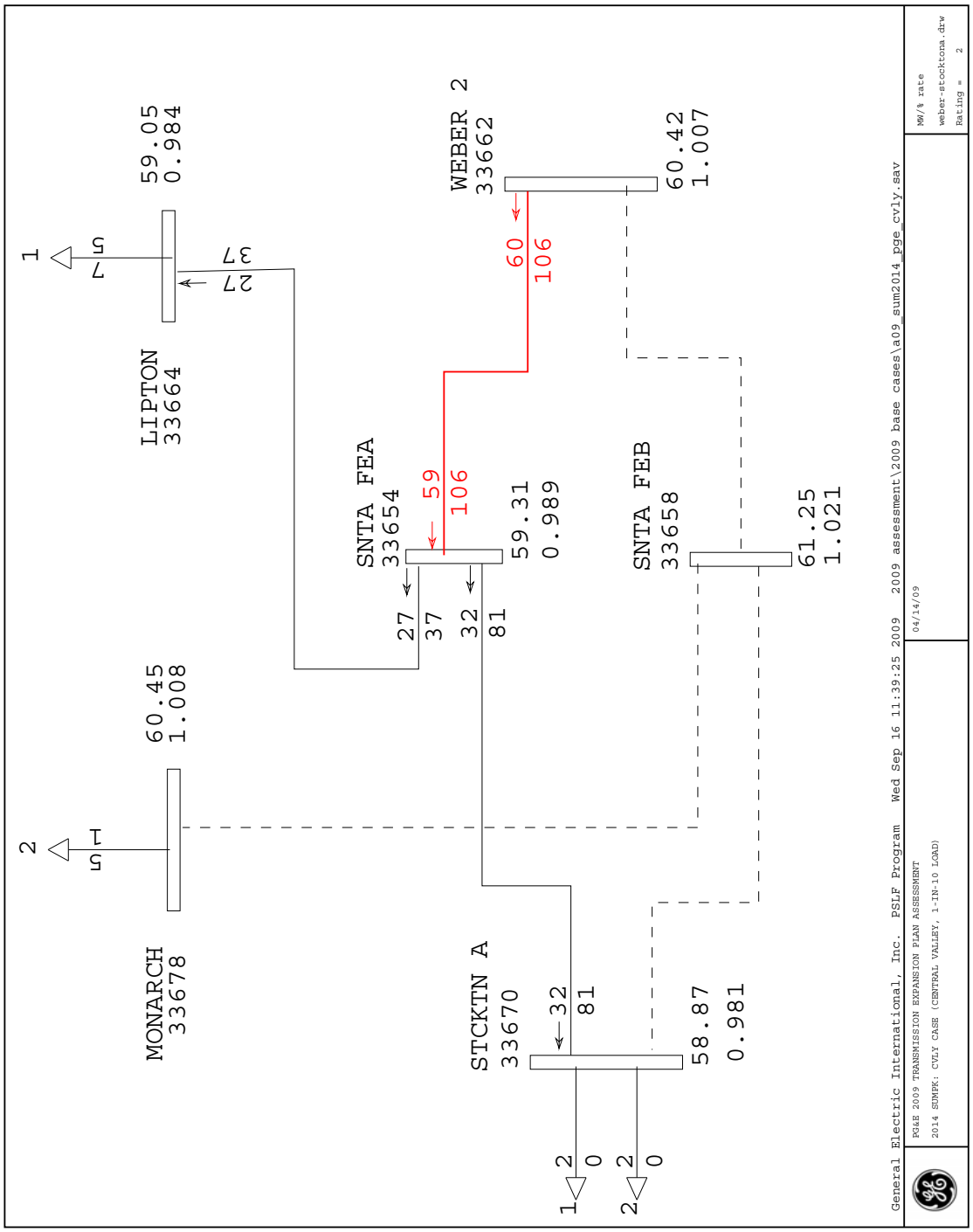

Figure 4-40: Pre-Project – 2014 Loss of Stockton 'A' – Weber #2 60 kV Line (L-1)

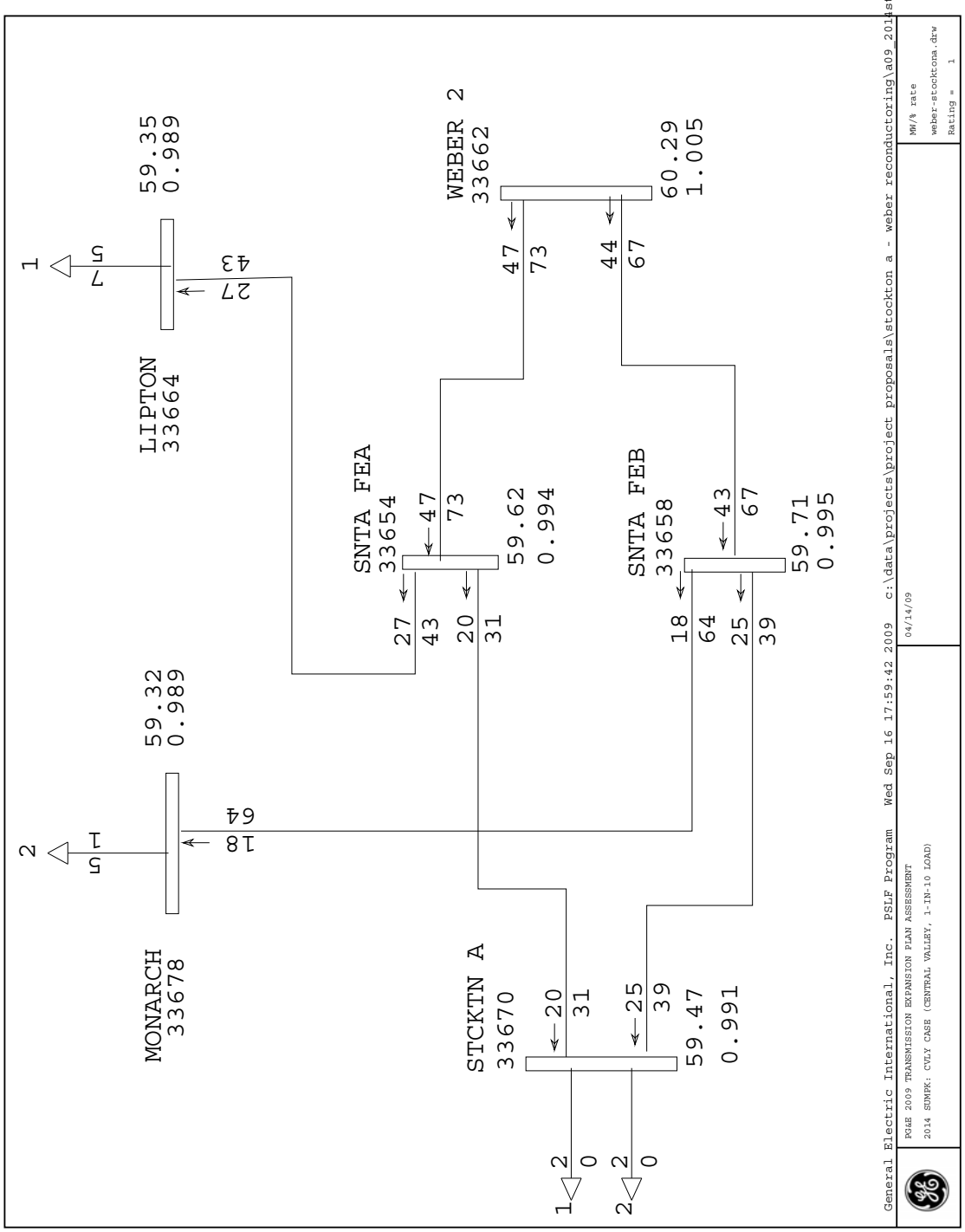

Figure 4-41: Post-Project – Normal Conditions

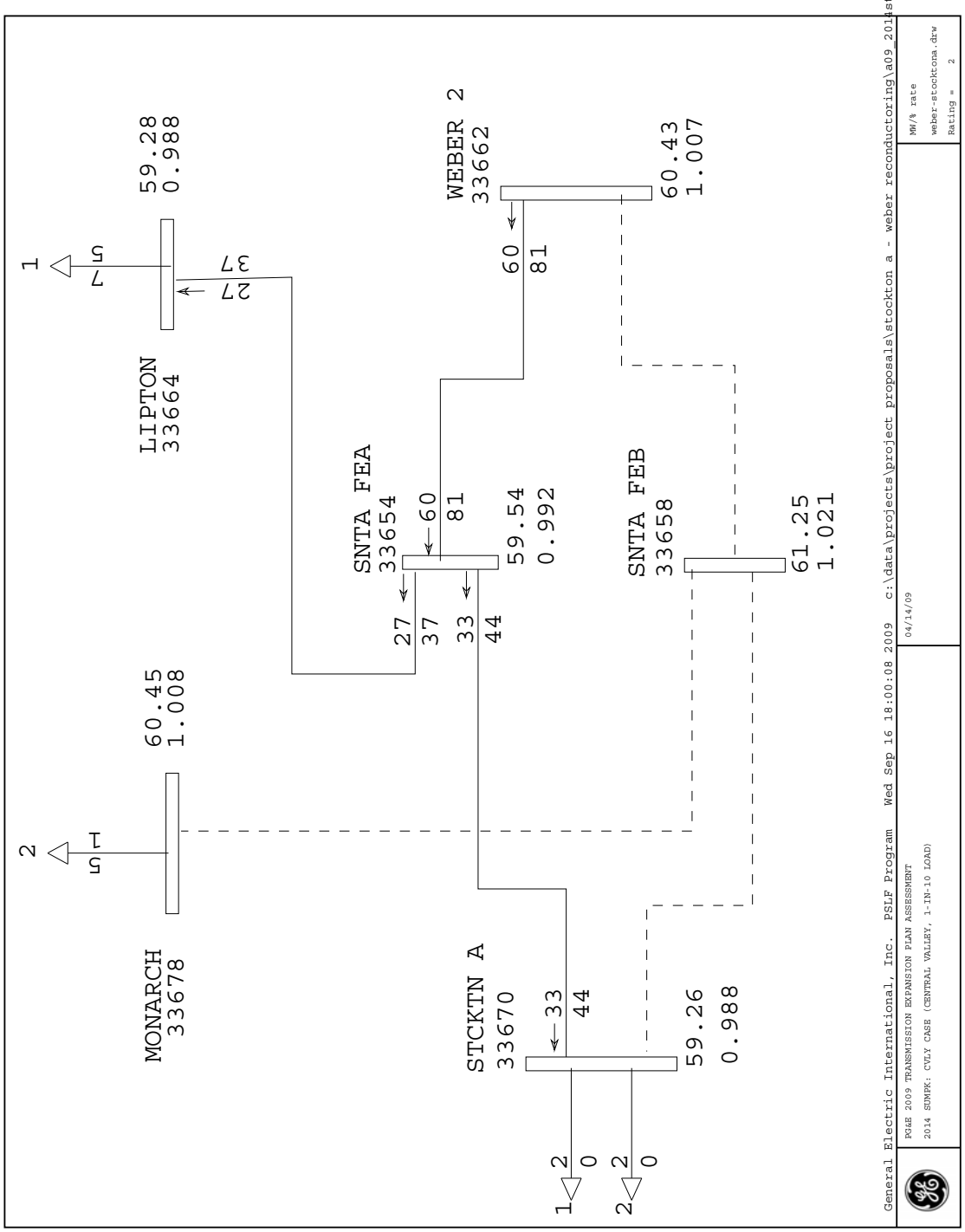

Figure 4-42: Post-Project – 2014 Loss of Stockton 'A' – Weber #2 60 kV Line (L-1)

Dumbarton – Newark 115 kV Line Capacity Upgrade

TARGETED IN-SERVICE DATE

May 2011

PURPOSE AND BENEFIT

Reliability – NERC Compliance

PROJECT CLASSIFICATION

This is a new project.

DESCRIPTION AND SCOPE OF PROJECT

The project scope is to upgrade limiting substation equipments (jumper conductors and relays) at Dumbarton substation to fully utilize the795 ACSS conductors on the Dumbarton-Newark 115 kV Line with summer normal and emergency ratings of 1542 Amps.

This project is expected to cost approximately $1 million.

BACKGROUND

The Newark-Dumbarton and the Eastshore-Dumbarton 115 kV Lines connect Dumbarton Substation to Newark and Eastshore Substations. In addition to serving electric customers at Dumbarton Substation, these two lines form a 115 kV path between the power plants in eastern Contra Costa County through Eastshore substation and the 230 kV and 500 kV bulk system facilities at Newark and Tesla Substations.

In 2006, Pacific Gas and Electric Company (the Utility) completed the Dumbarton-Newark 115 kV Line Reconductoring Project, which reconductored the Dumbarton-Newark 115 kV Line (7.1 miles in length) to 795 steel supported aluminum conductors (ACSS)[1]. This project was part of California Independent System Operator's (CAISO) action plan[2] to terminate the Potrero Power Plant Reliability Must Run (RMR) contract.

[1] 795 ACSS conductor has a summer normal and emergency ratings of 1542 Amps.
[2] The other projects the CAISO included in its Action Plan are: (1) Ravenswood 230 kV Shunt Capacitors, (2) Bair-Belmont 115 kV Line Reconductoring, (3) Metcalf-Hicks and Metcalf-Vasona 230 kV Line Reconductoring, and (4) City and County of San Francisco's generation project.

Due to substation equipment limitations (jumper conductors and relay ratings), the Dumbarton-Newark 115 kV Line ratings are limited to a summer normal and emergency rating of 1055 Amps and 1170 Amps, respectively.

In 2012, a new 600 MW generator, Russell City Energy Center (RCEC), will connect into the Eastshore 230 kV bus. This connection will make the Eastshore Substation the main power source for the Dumbarton load.

Planning analysis indicates, with the addition of Russell City Energy Center (RCEC) connected to the Eastshore 230 kV bus, an overlapping outage of the Eastshore-San Mateo 230 kV Line combined with Metcalf Energy Center (MEC) offline during summer peak conditions could result in a 27% overload on the Dumbarton-Newark 115 kV Line by 2012.

BASE CASE AND STUDY ASSUMPTIONS

PG&E used base cases and assumptions approved in the CAISO Unified Planning Assumptions and Study Plan for the 2009 Transmission Planning Process cycle.

STUDY CRITERIA

CAISO grid planning criteria
NERC Transmission Planning Reliability Standards

OTHER ALTERNATIVES CONSIDERED

Alternative 1: Status Quo

This alternative is not recommended. This alternative does not address the potential overload issue.

PROJECT SCHEDULE

- Environmental and Permitting Processes – TBD
- Design – TBD
- Major Equipment – TBD
- Construction – TBD
- Operation Date – May 2011

KEY ISSUES

- Land-Use Restrictions – None
- Environmental Concerns – None
- Special Metering or Protection – None
- Common Mode Exposure Items – None
- Interaction with other Projects or Studies – TBD

GEPSLF MODELING INFORMATION

```
# This change file will reflect the 795 ACSS conductor rating.
# Purpose of the project is to eliminate limiting substation
# equipment.
OLDSECDD  35107, 35120, CKT=1, SEC=1, STATUS=1, MVA1=307.14, +
MVA2=307.14, MVA3=366, MVA4=366
# END
```

MISCELLANEOUS DATA

- PG&E will construct, own, and finance the project
- PG&E will be the planned operator of the project

ATTACHMENTS

1. Scope Diagram
2. Demand Forecast
3. Power Flow Summary
4. Pre- and Post-Project Power Flow Plots

Attachment 1: Scope Diagram

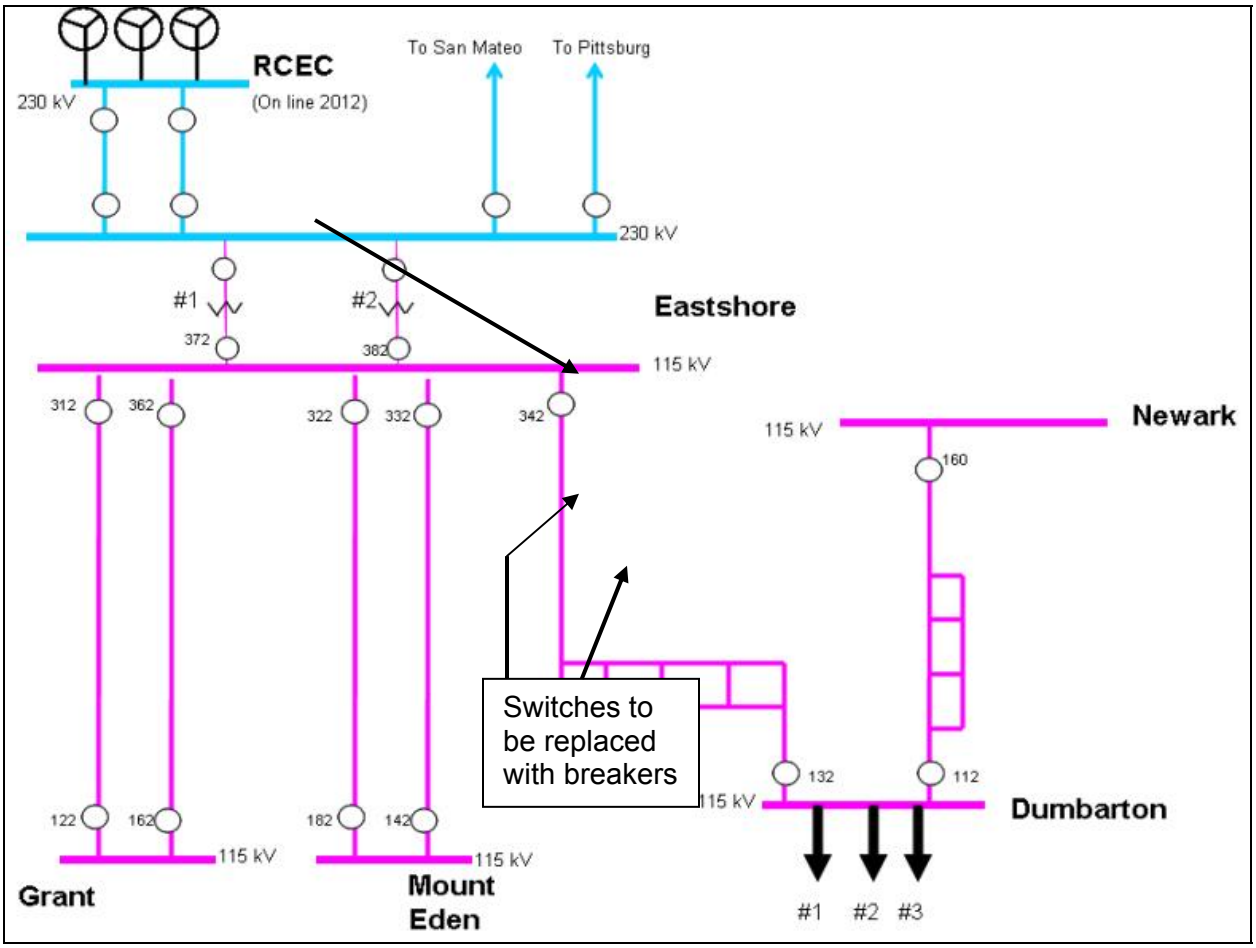

Figure 4-43: Scope Diagram

Attachment 2: Demand Forecast

Table 4-18: Mission Division Demand Forecast

Area	2010 (MW)	2011 (MW)	2012 (MW)	2013 (MW)	2014 (MW)	Growth Rate (MW/Year)	Growth Rate (%/Year)
Mission	1373	1398	1421	1438	1455	20.5	1.49

Attachment 3: Power Flow Summary

Table 4-19: Power Flow Summary

Normal/Contingency	Facility Affected	Pre-Project Facility Rating	2012 Pre-Project	2012 Post-Project	2019 Pre-Project	2019 Post-Project
Eastshore-San Mateo 230 kV Line	Dumbarton-Newark 115 kV Line	SE Rating 1170 Amps	125%	95%	126%	96%
Eastshore-San Mateo 230 kV Line and MEC off-line	Dumbarton-Newark 115 kV Line	SE Rating 1170 Amps	127%	96%	129%	98%

Attachment 3: Pre and Post Project Power Flow Plots

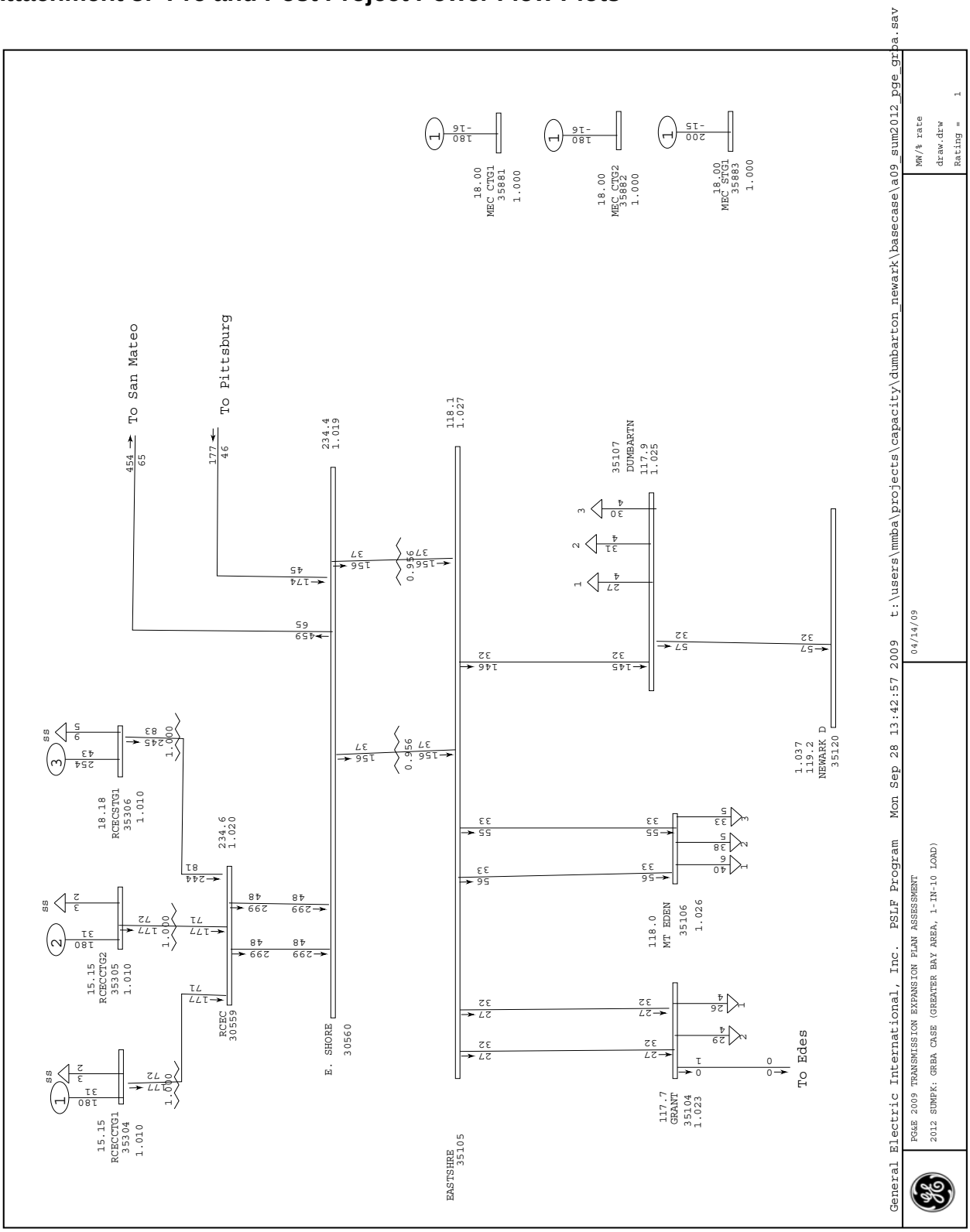

Figure 4-44: Pre-Project: Normal Conditions

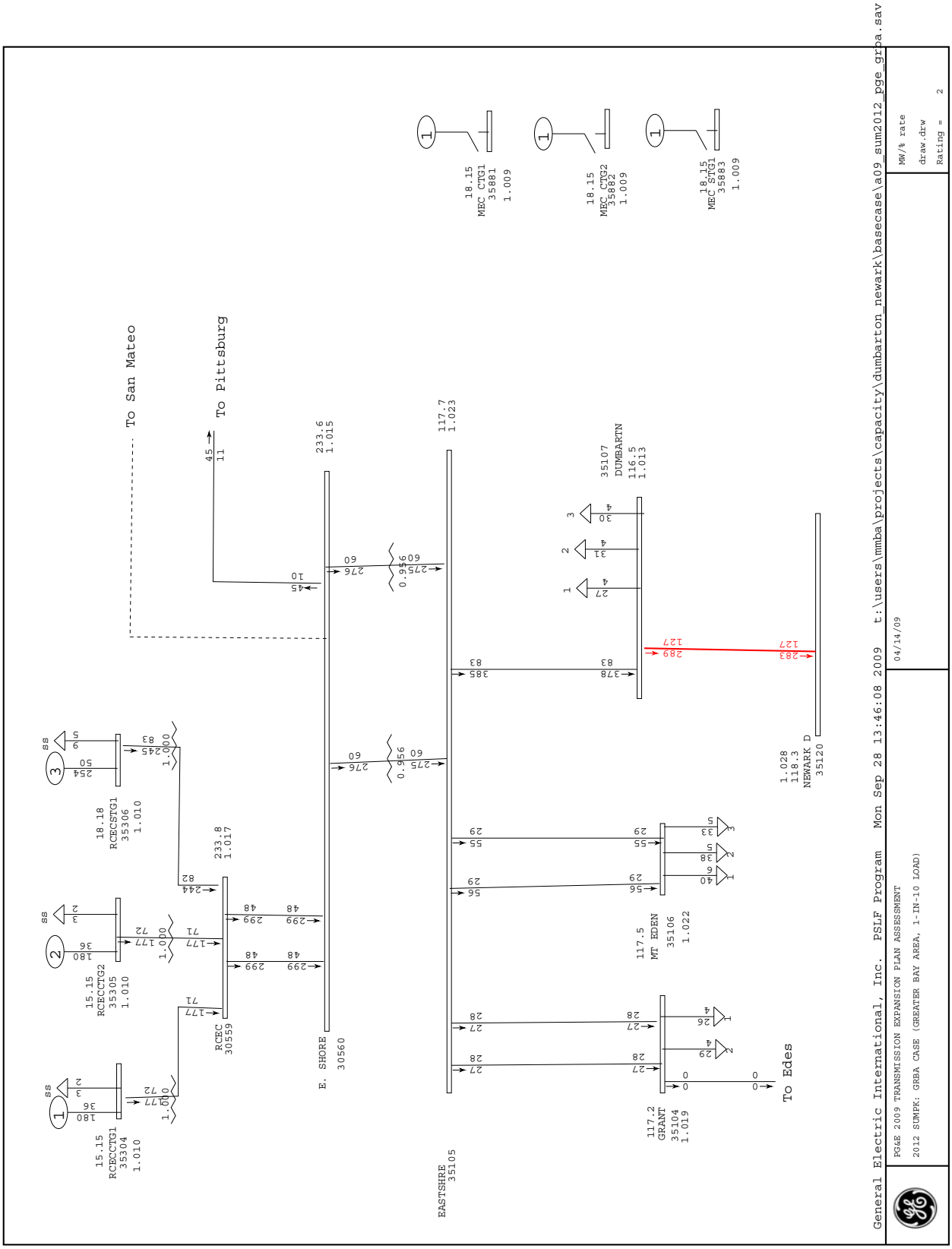

Figure 4-45: Pre-Project: Loss of Eastshore-San Mateo 230 kV Line and MEC off-line

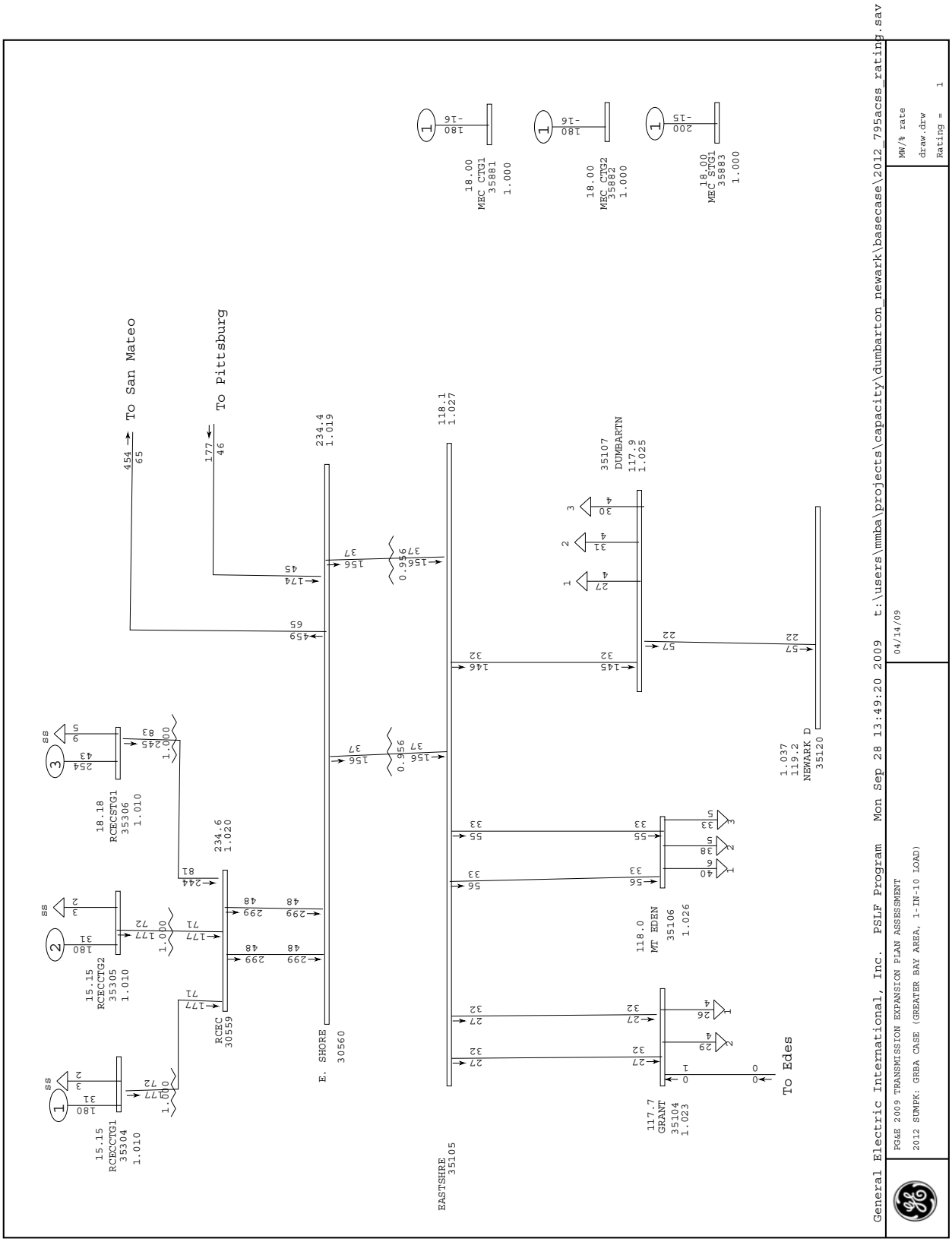

Figure 4-46: Post-Project: Normal Conditions

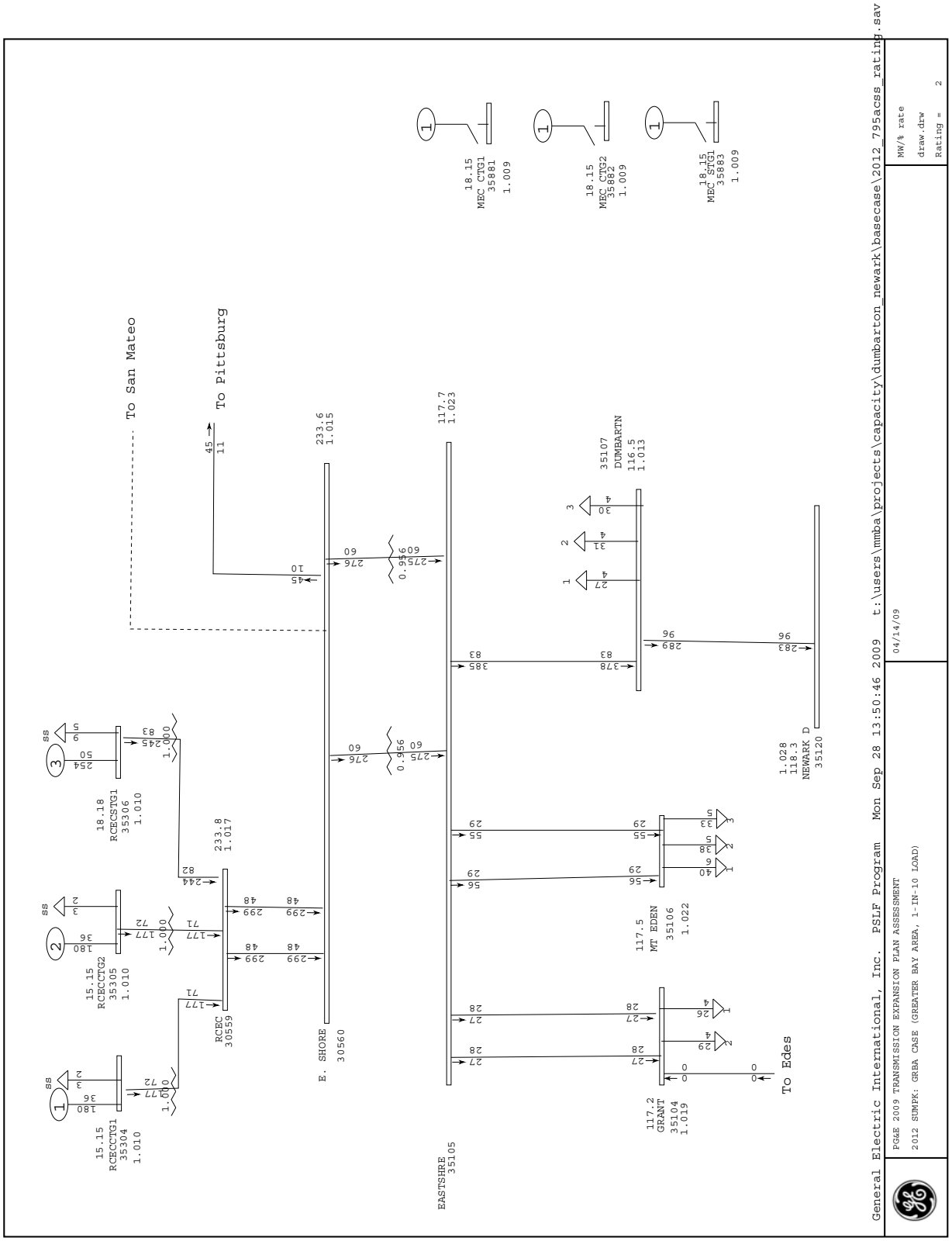

Figure 4-47: Post-Project: Loss of Eastshore-San Mateo 230 kV Line and MEC off-line

Divide Transmission Project

IN-SERVICE DATE

May 2011

PURPOSE AND BENEFIT

Reliability – NERC compliance.

PROJECT CLASSIFICATION

This is a new project.

DESCRIPTION AND SCOPE OF PROJECT

This project proposes to develop a manually operated switching plan or install a new special protection scheme (SPS) at Divide Substation. The switching plan or SPS at Divide Substation would trip circuit breaker (CB) number (No.) 132 and 142 for the loss of both Mesa-Divide 115 kV Lines. In addition to the SPS, the City of Lompoc Substation will need to block the automatic transfer. This SPS will be designed to be fully redundant, as required by WECC standards.

This project is expected to cost between $1M and $2M

BACKGROUND

Divide Substation is located in Santa Barbara County and is part of Pacific Gas and Electric's Los Padres Division. Divide is a 115 kV substation with distribution and sub-transmission level equipment. Divide is ultimately supplied power from the Mesa 230 kV system.

Four 115 kV lines terminate at Divide Substation, the Mesa-Divide No. 1 and 2, and the Divide-Cabrillo No. 1 and 2 115 kV Lines. There are two 115/70 kV single phase transformer banks at Divide Substation that serve the local 70 kV system. The 2010 forecasted load for the area between Divide and Sisquoc is 137 MW, with an expected growth rate of 1.4 MW per year.

Planning analysis determined that a common structure outage of the Mesa-Divide No. 1 and 2 115 kV Lines will cause voltage in the area between Sisquoc and Divide Substation to drop below 0.70 p.u. causing a voltage collapse situation. Additionally the Sisquoc-Ynez 115 kV Line will exceed its thermal rating by more than 90% in 2010 for the same outage.

BASE CASE AND STUDY ASSUMPTIONS

PG&E used base cases and assumptions approved in the CAISO Unified Planning Assumptions and Study Plan for the 2009 Transmission Planning Process cycle.

STUDY CRITERIA

CAISO grid planning criteria
NERC Transmission Planning Reliability Standards

OTHER ALTERNATIVES CONSIDERED

Alternative 1: Status Quo

This alternative is not recommended. This alternative does not address the potential overload and voltage collapse issue.

Alternative 2: Mesa Divide 115 kV Line No. 3

The project scope is to construct a new 15 mile 115 kV line from Mesa to Divide Substation. The conductor for the new line should be rated to handle up to 630 Amps and 740 Amps under summer normal and summer emergency conditions respectively. In addition, the project scope would require obtaining any necessary environmental and land permits to construct the new line.

This project is expected to cost between $20 million and $25 million

PROJECT SCHEDULE

- Environmental and Permitting Processes – TBD
- Design – TBD
- Major Equipment – TBD
- Construction – TBD

KEY ISSUES

- Land-Use Restrictions – TBD
- Environmental Concerns – TBD
- Special Metering or Protection - None
- Common Mode Exposure Items – Possible shared right-of-way
- Interaction with other Projects or Studies – N/A

GEPSLF MODELING INFORMATION

None Required.

ATTACHMENTS

1. Scope Diagram
2. Demand Forecast
3. Power Flow Summary
4. Pre and Post Project Power Flow

Attachment 1: Scope Diagram

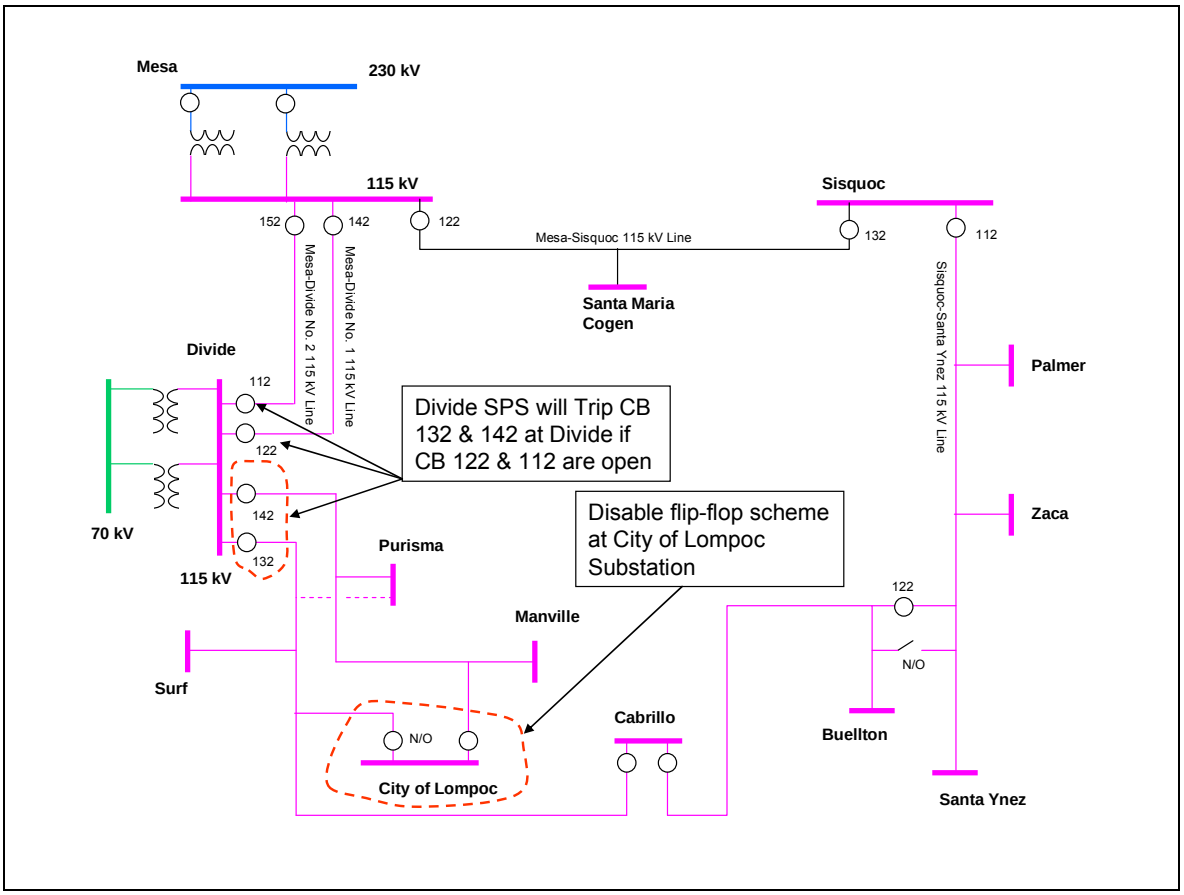

Figure 4-48: Scope Diagram

Attachment 2: Demand Forecast

Table 4-20: Demand Forecast in the Divide to Sisquoc 115 kV Area

Substation/Bank	2010 (MW)	2011 (MW)	2012 (MW)	2013 (MW)	2014 (MW)	Growth Rate (MW/yr)
Buellton #1	8.0	8.2	8.4	8.5	8.7	0.2
Buellton #2	10.6	10.8	11.0	11.2	11.4	0.2
Surf	10.0	10.0	10.0	10.0	10.0	0.0
Palmer	1.8	1.9	1.9	1.9	1.9	0.0
Zaca	5.6	5.8	5.9	6.0	6.1	0.1
Santa Ynez #1	7.7	7.9	8.0	8.2	8.3	0.2
Santa Ynez #2	10.1	10.3	10.5	10.7	10.9	0.2
Manville	12.5	12.5	12.5	12.5	12.5	0.0
Cabrillo	6.4	6.5	6.7	6.8	6.9	0.1
Purisima	6.4	6.5	6.7	6.8	6.9	0.1
Divide	5.4	5.5	5.5	5.6	5.7	0.1
Vandenberg Air Force	26.2	26.2	26.2	26.2	26.2	0.0
City of Lompoc	25.9	26.1	26.3	26.5	26.7	0.2
Total Area Load	136.5	138.1	139.6	140.9	142.1	1.4

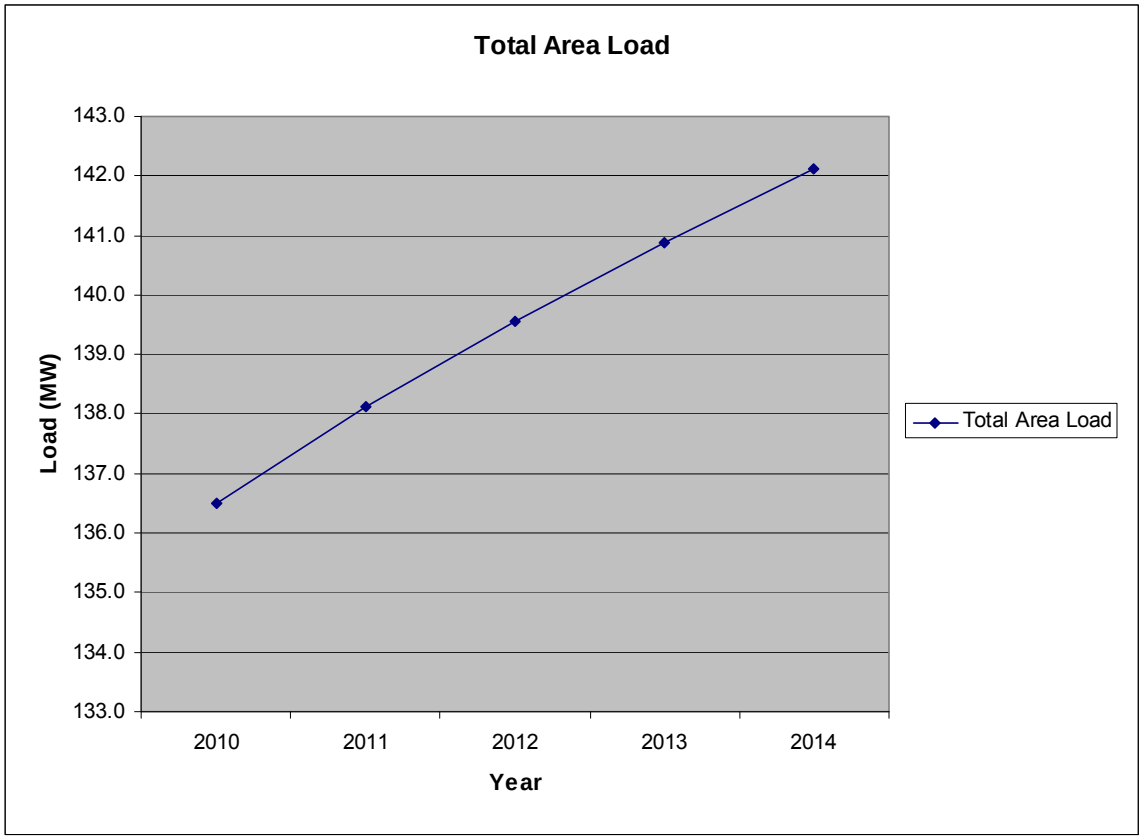

Figure 4-49: Demand Forecast Graph

Attachment 3: Power Flow Results

Table 4-21: Power Flow Results

			Pre Project						Post Project	
#	Facility	Facility Rating	2010	2011	2012	2013	2014	2019	2019	Contingency
1	Divide 115 kV Bus	115 kV	< 0.70 p.u.						N/A.	Mesa-Divide 115 kV Line Nos. 1 & 2 (L-2)
2	Sisquoc-Santa Ynez 115 kV Line	SE Rating 371 Amps	> 190%						86%	Mesa-Divide 115 kV Line Nos. 1 & 2 (L-2)

Attachment 4: Pre and Post Project Power Flow

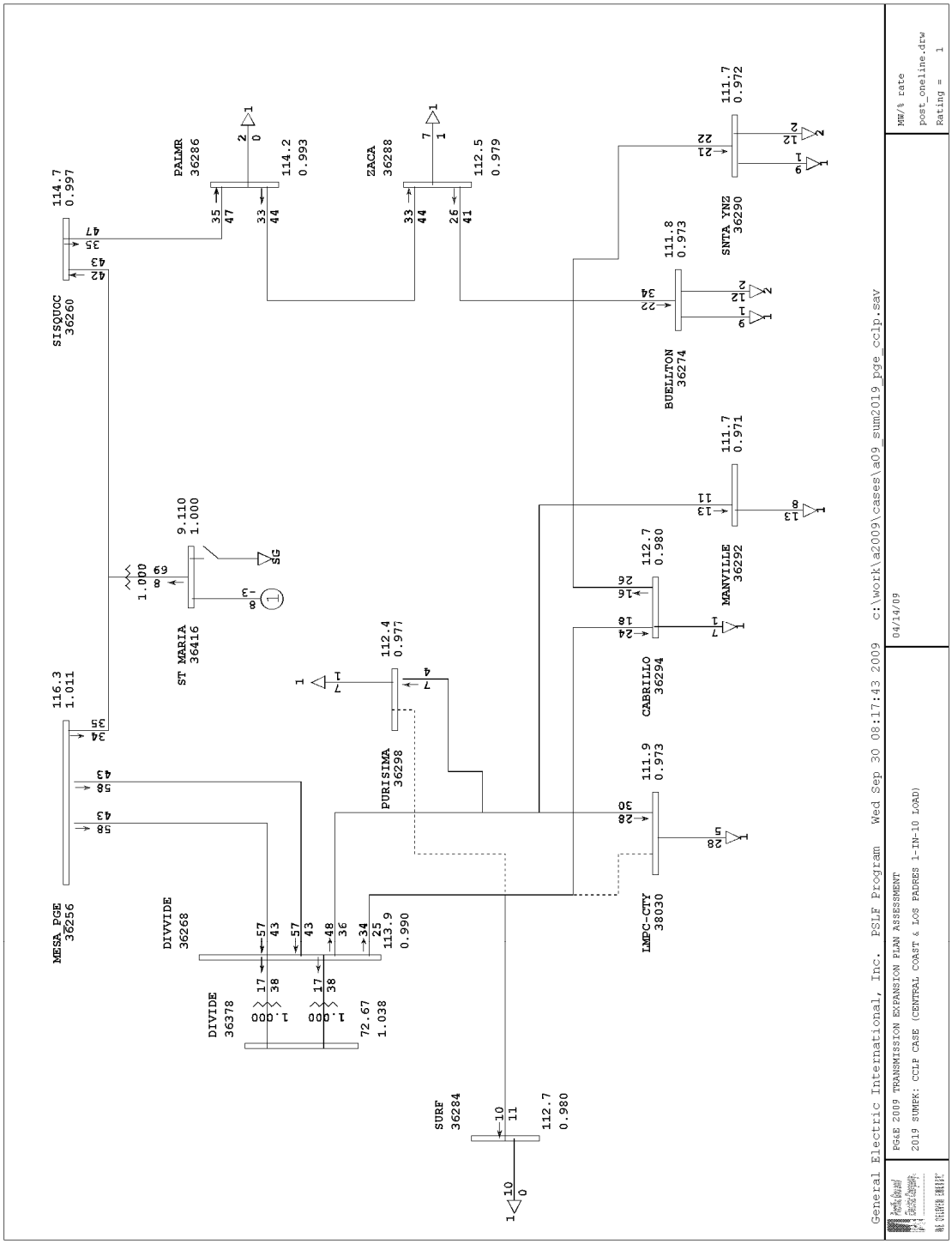

Figure 4-50: Pre Project – Normal Conditions

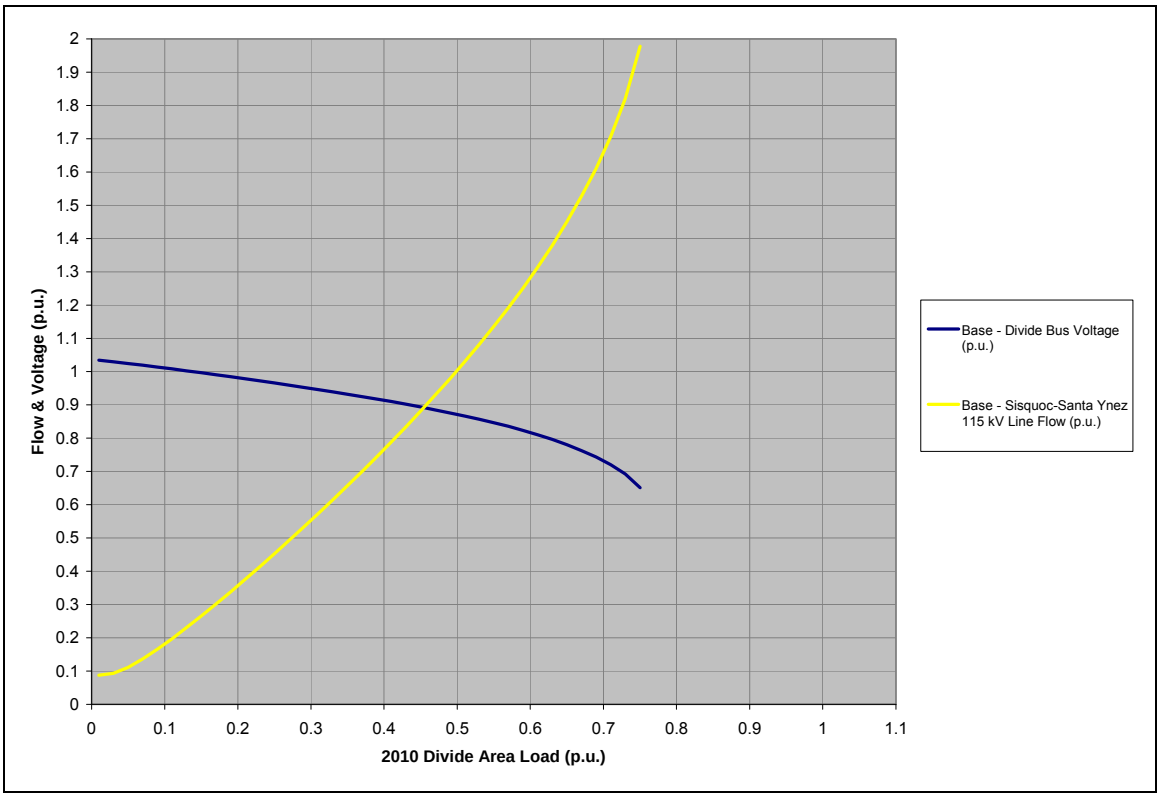

Figure 4-51: Pre Project – Mesa-Divide 115 kV Line Nos. 1 & 2 Outage (L-2)

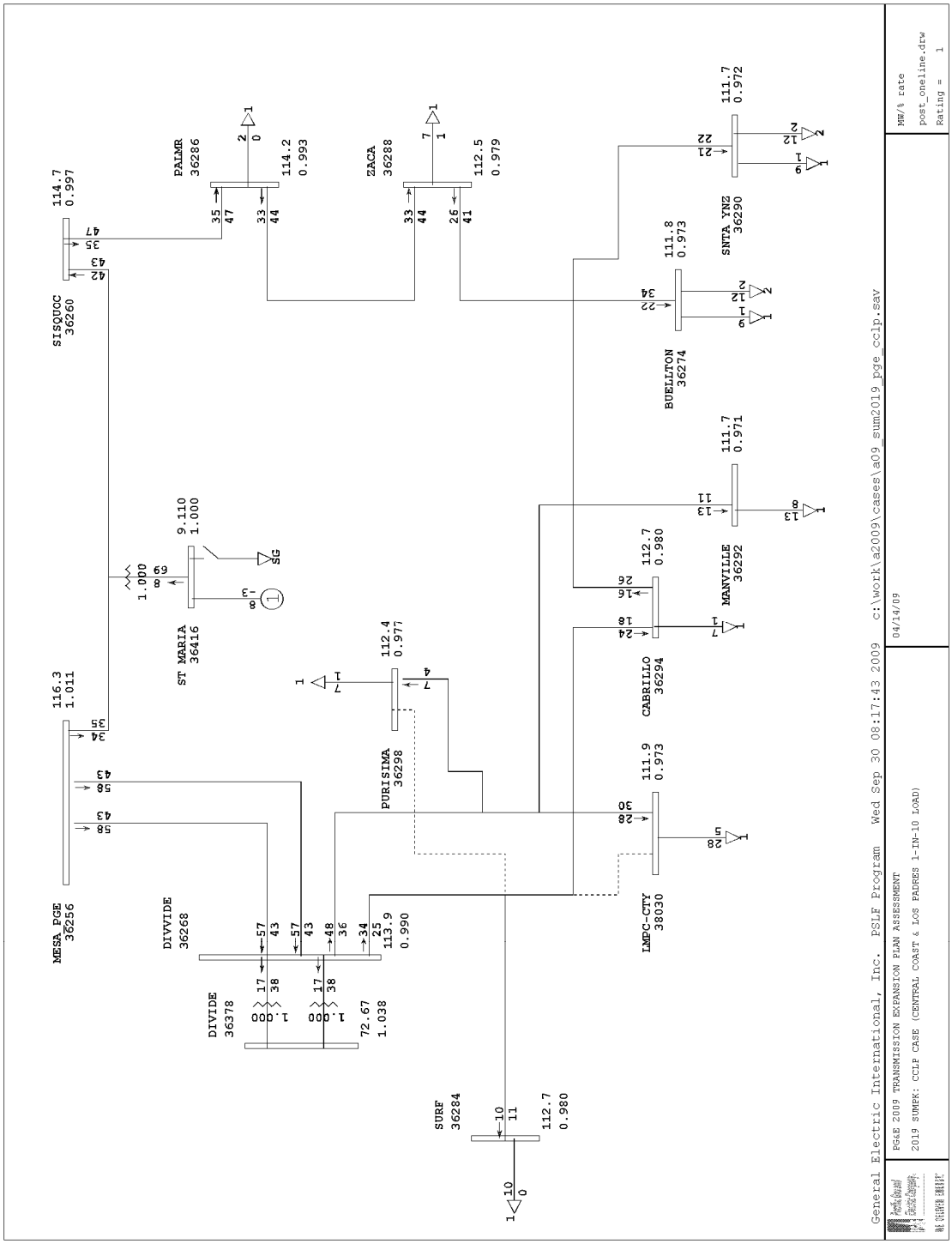

Figure 4-52: Post Project – Normal Conditions

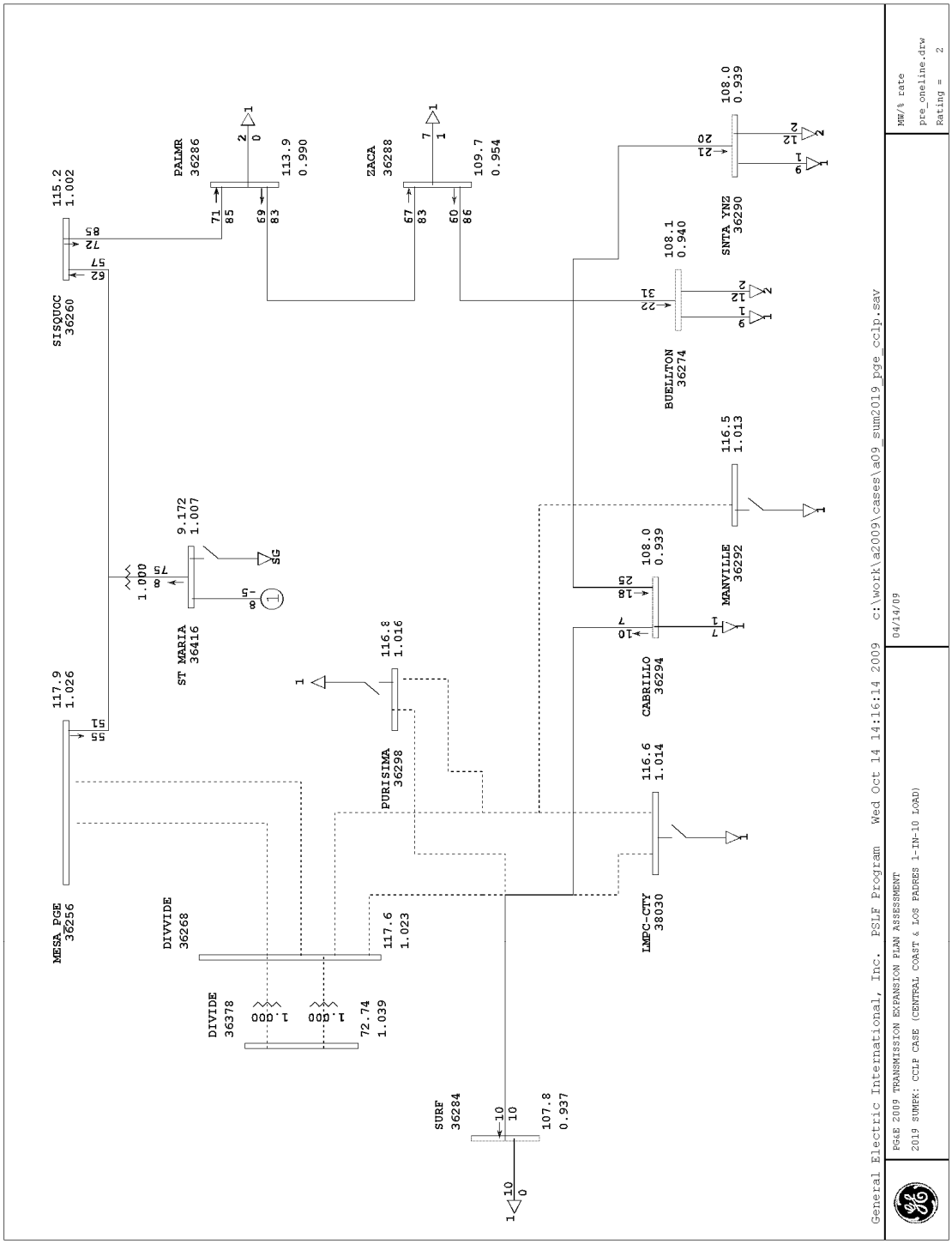

Figure 4-53: Post Project – Mesa-Divide 115 kV Line Nos. 1 & 2 Outage (L-2)

2012 Projects

Corcoran 115/70 kV Transformer Replacement Project

TARGETED IN-SERVICE DATE

May 2012

PURPOSE AND BENEFIT

Reliability – NERC Compliance

PROJECT CLASSIFICATION

This is a new project.

DESCRIPTION AND SCOPE OF PROJECT

Replace the Corcoran 115/70 kV Transformer No. 2. The project scope would include replacing the current 115/70 kV Transformer at Corcoran substation and installing a new 70 kV regulator both rated to handle up to 90 MVA.

This project is expected to cost between $10M and $20M.

BACKGROUND

Corcoran Substation Substation is located in Kings County and is part of Pacific Gas and Electric's Fresno Division. Corcoran Substation currently has three single phase 9.38 MVA 115/70 kV transformers, currently this transformer is limited to 18.8 MVA under summer normal conditions. The 70 kV lines leaving Corcoran Substation are the Corcoran-Angiola and the Corcoran-Guernsey 70 kV Lines, although the Corcoran-Guernsey 70 kV Line is normally open at Guernsey Substation. The 70 kV system off of Corcoran Substation loaded up to 17.2 MW in 2008 serving 756 customers. The total peak demand for this area is expected to grow at a rate of just over 0.8 MW per year.

Planning studies have concluded that with normal summer peak load conditions, the Corcoran 115/70 kV Transformer will be loaded to 103% of its normal ratings by 2011. Currently distribution load is being transferred to surrounding distribution substation to offload the 115/70 kV transformer.

BASE CASE AND STUDY ASSUMPTIONS

PG&E used base cases and assumptions approved in the CAISO Unified Planning Assumptions and Study Plan for the 2009 Transmission Planning Process cycle.

STUDY CRITERIA

CAISO grid planning criteria
NERC Transmission Planning Reliability Standards

OTHER ALTERNATIVES CONSIDERED

Alternative 1: Status Quo

This alternative is not recommended. This alternative does not address load growth and reliability concerns.

Alternative 2: Corcoran-Angiola 70 kV to 115 kV Conversion

This alternative proposes to convert the Corcoran-Angiola 70 kV Line to 115 kV operation. This will require the Corcoran-Angiola 70 kV Line to be reinsulated for 115 kV operation, and any transformers attached to this line will need to be changed to the correct voltage class.

PROJECT SCHEDULE

- Environmental and Permitting Processes – TBD
- Design – TBD
- Major Equipment – TBD
- Construction – TBD

KEY ISSUES

- Land-Use Restrictions – TBD
- Environmental Concerns – TBD
- Special Metering or Protection - None
- Common Mode Exposure Items - None
- Interaction with other Projects or Studies – N/A

GEPSLF MODELING INFORMATION

```
#Replace Corcoran 115/70kV Transformer No. 2
OLD_TRAN  34528, 34420, CKT="2 ", ZR=0.0028, ZX=0.00588, BMAG=-0.0051,+
          MVA1=90, MVA2=108, MVA3=90, MVA4=108, TYPE=2, REG=34528, +
          VMAX=1.08, VMIN=1.06,STEPP=0.00625, TMAX=1.075, TMIN=0.925
```

MISCELLANEOUS DATA

- PG&E will construct, own, and finance the project
- PG&E will be the planned operator of the project

ATTACHMENTS

1. Scope Diagram
2. Demand Forecast
3. Power Flow Summary
4. Pre and Post Project Power Flow Plots

Attachment 1: Scope Diagram

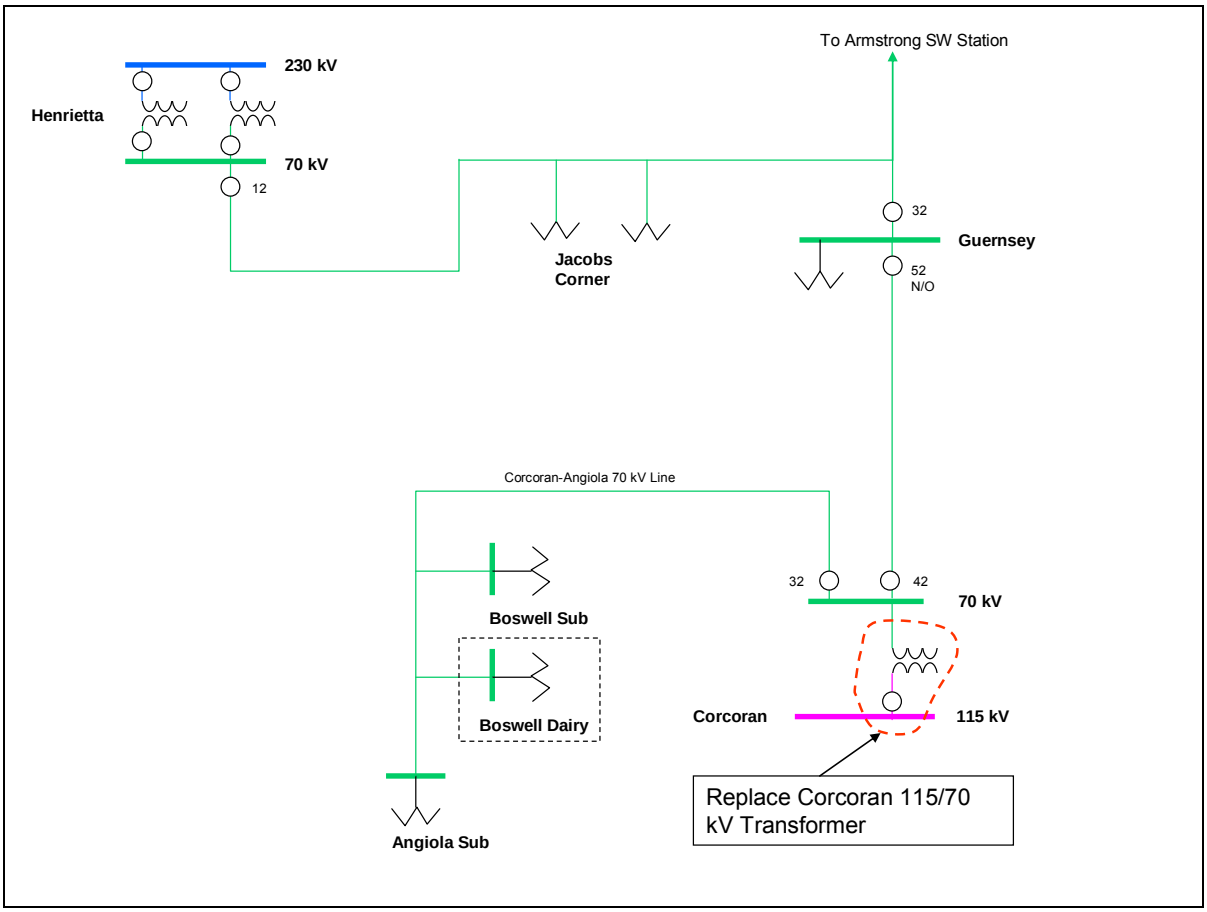

Figure 4-54: Scope Diagram

Attachment 2: Demand Forecast

Table 4-22: Demand Forecast in the Corcoran 70 kV Area

Substation/Bank	2010 (MW)	2011 (MW)	2012 (MW)	2013 (MW)	2014 (MW)	Growth Rate (MW/yr)
JG Boswell	4.5	4.5	4.5	4.5	4.5	0.0
Angiola	8.5	11.7	11.7	11.6	11.6	0.8
Boswell	2.0	2.0	2.0	2.0	2.0	0.0
Total Area Load	15.1	18.2	18.2	18.2	18.1	0.8

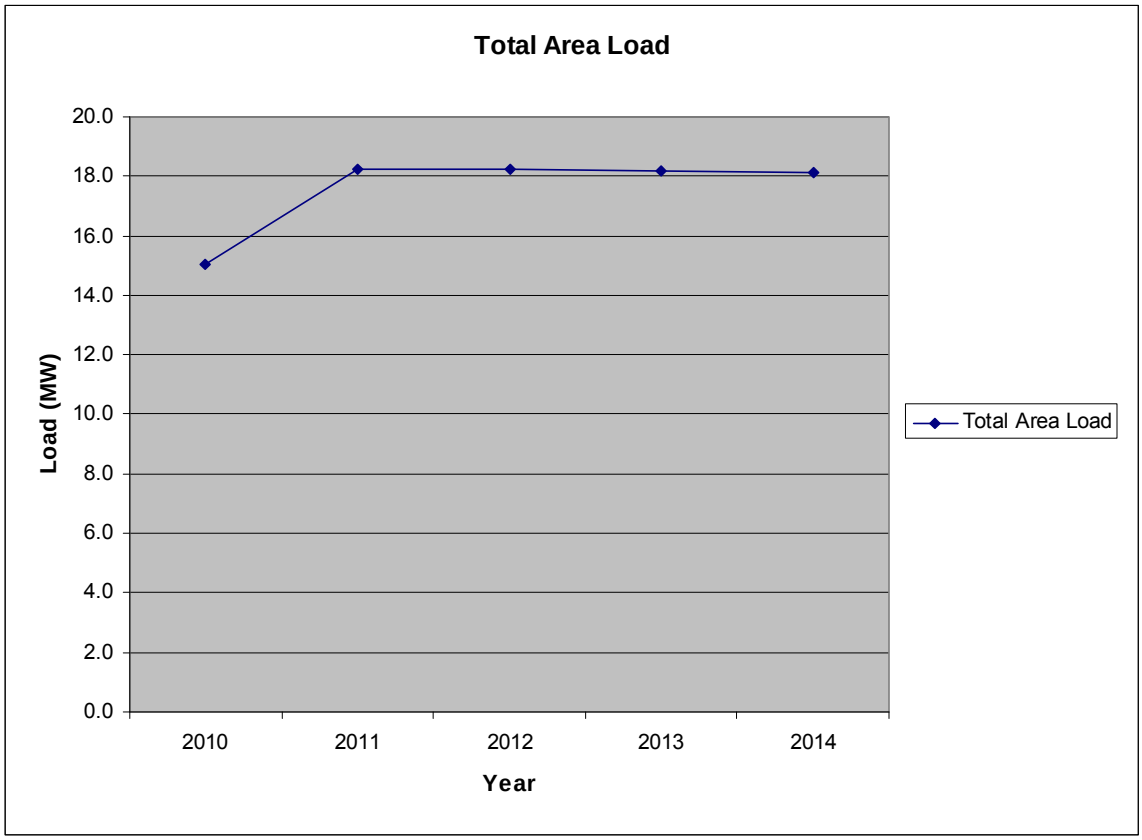

Figure 4-55: Demand Forecast Graph

Attachment 3: Power Flow Summary

Table 4-23: Power Flow Results

			Pre Project						Post Project	
#	Facility	Facility Rating	2010	2011	2012	2013	2014	2019	2019	Contingency
1	Corcoran 115/70 kV Bank #2	SN Rating 18.7 MVA	n/a	105%	105%	105%	105%	110%	23%	Normal Conditions (N-0)

Attachment 4

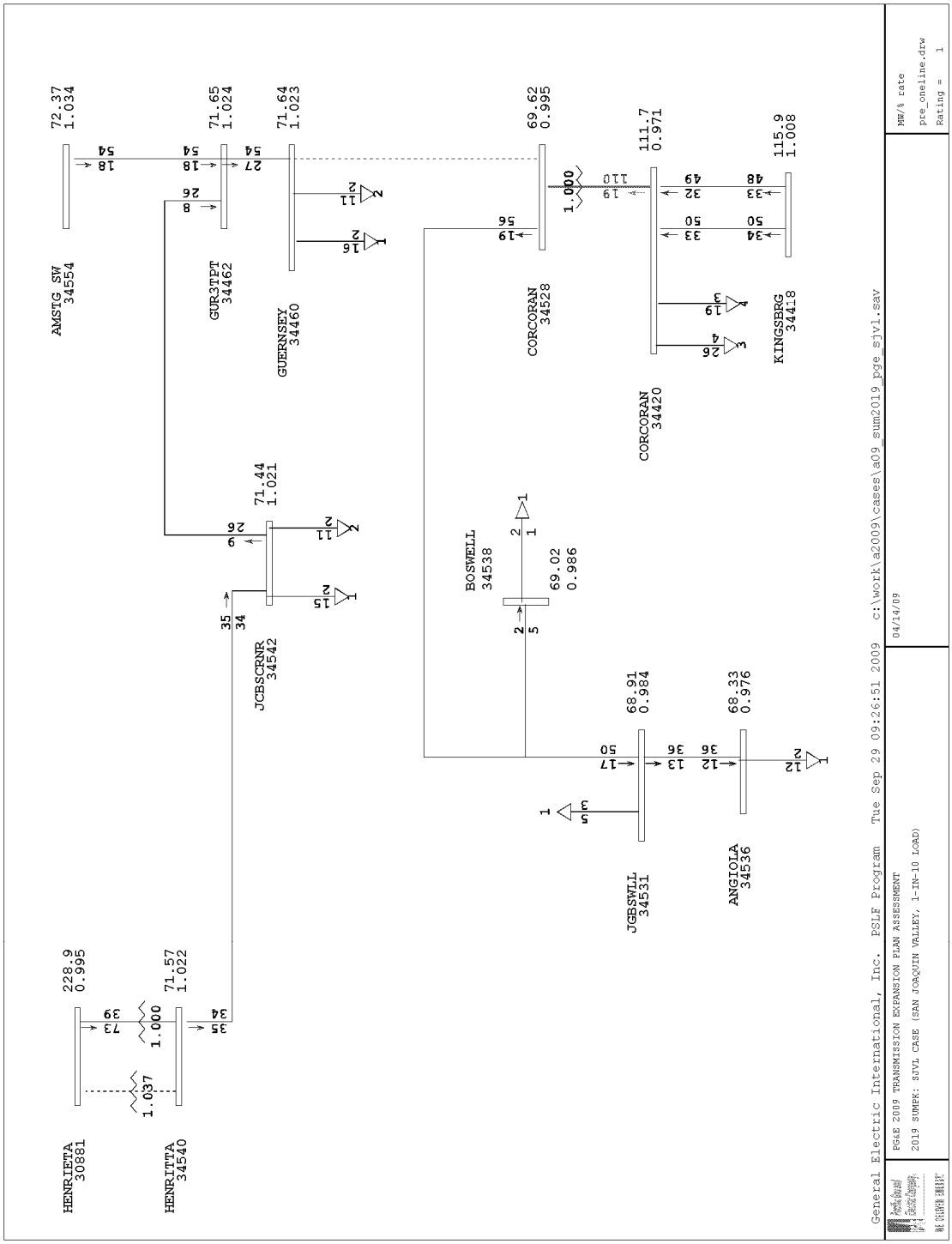

Figure 4-56: Pre Project – Normal Conditions

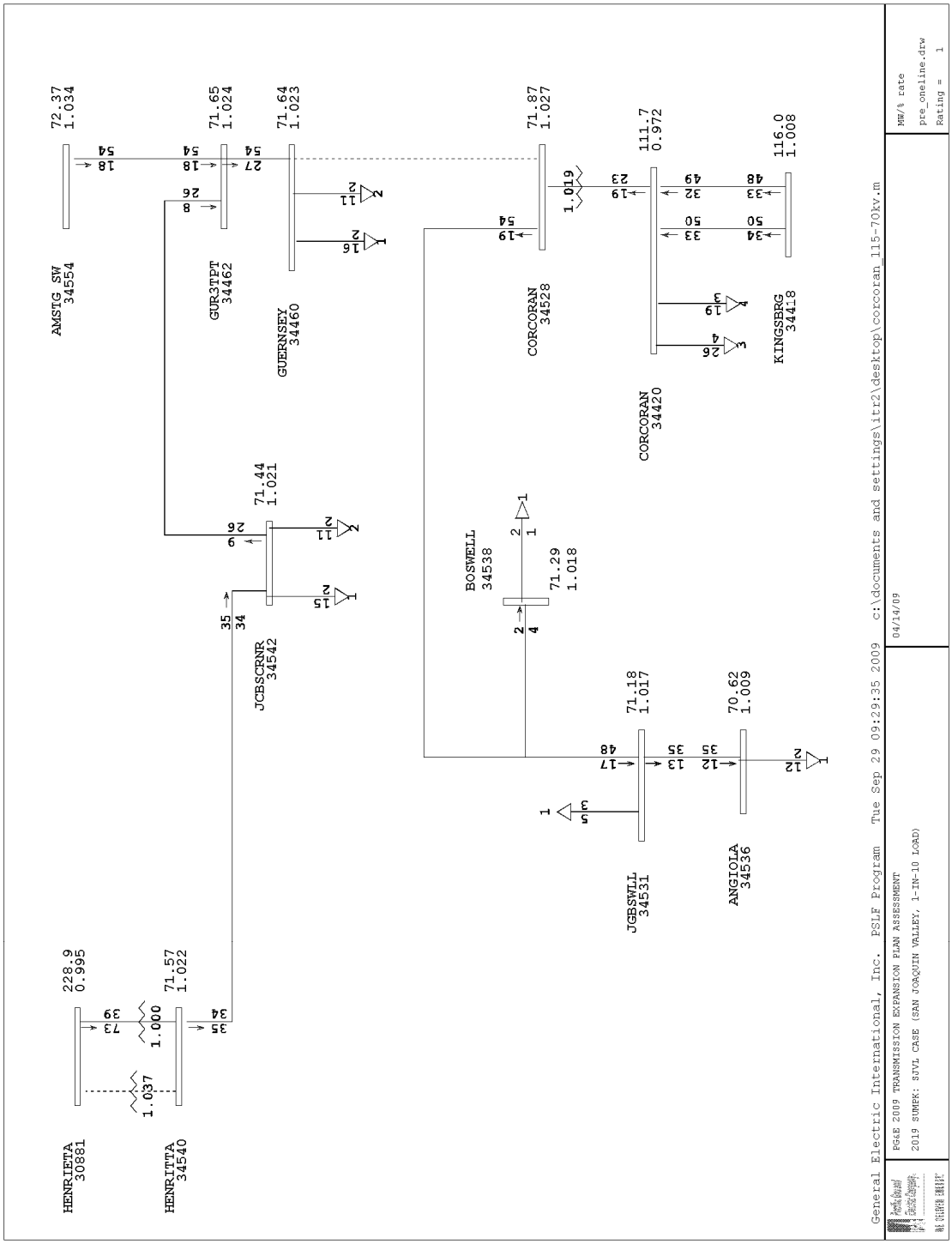

Figure 4-57: Post Project – Normal Conditions

2013 Projects

Weber 230/60 kV Transformer Nos. 2 and 2A Replacement

TARGETED IN-SERVICE DATE

May 2013

PURPOSE AND BENEFIT

Reliability – NERC Compliance

PROJECT CLASSIFICATION

This is a new project.

DESCRIPTION AND SCOPE OF PROJECT

The project scope is to:

- Replace Weber 230/60 Transformer Nos. 2 and 2a with a new transformer rated at least 300 MVA with LTC and associated equipment
- Replace the 60 kV bus tie so that it does not limit the rating of the new transformer

This project is expected to cost between $8M and $15M.

BACKGROUND

Weber Substation serves electric customers in San Joaquin County. The majority of its power comes through its 230/60 Transformer Nos. 1, 2, and 2a. Weber 230/60 kV Transformers Nos. 2 and 2a are connected in a piggy-back arrangement sharing CBs 92, 202, and 242 and have an overall rating of 211 MVA. Transformer No. 1 was installed in 1999 and is rated at 330 MVA. The 2010 projected total peak load served by the Weber 230/60 kV Transformers is approximately 234 MW and is forecast to increase at a rate of 2.2 MW or 0.9% per year.

Planning analysis determined that the loss of the Weber 230/60 kV Transformer No. 1 (T-1) is projected to overload the Weber Transformer Nos. 2 and 2A by 20% in 2013. Additionally, the Weber 60 kV Bus tie would overload by 10% in 2013. The overload of these facilities is mainly due to a recent shutdown of a QF unit in the area, Cogen

National. The proposed project will effectively mitigate the potential overloads following an outage of either Weber 230/60 kV Transformer.

BASE CASE AND STUDY ASSUMPTIONS

PG&E used base cases and assumptions approved in the CAISO Unified Planning Assumptions and Study Plan for the 2009 Transmission Planning Process Cycle.

STUDY CRITERIA

CAISO grid planning criteria
NERC Transmission Planning Reliability Standards

OTHER ALTERNATIVES CONSIDERED

Alternative 1: Status Quo

This alternative is not recommended because it does not mitigate the expected capacity constraints.

PROJECT SCHEDULE

- Environmental and Permitting Processes – TBD
- Design – TBD
- Major Equipment – TBD
- Construction – TBD
- Operation Date – May 2013

KEY ISSUES

- Land-Use Restrictions – There are no land-use restrictions with this project.
- Environmental Concerns – TBD
- Special Metering or Protection – TBD
- Common Mode Exposure Items – None
- Interaction with other Projects or Studies – None

GEPSLF MODELING INFORMATION

```
#Replace the Weber 230/60 kV Transformer Nos. 2 and 2A with a larger one
#
#Remove Transformer No. 2
OLD_TRAN  33662, 30505, CKT=2, STAT=-1
#Remove Transformer No. 2A
OLD_TRAN  33662, 30505, CKT="2a", STAT=-1
#
#New Transformer No. 3
NEW_TRAN  33662, 30505, CKT=3, ZR=0.002, ZX=0.0292, BMAG=-0.008,+
     MVA1=300, MVA2=330, MVA3=300, MVA4=330, VNOMF=61.5, VNOMT=230, MVABASE=100,+
     STAT=1, TYPE=2, TAPF=1, REG=33662, VMAX=1.0667, VMIN=1,+
     STEPP=.00625, TMAX=1.1, TMIN=0.9, TAPFP=1, TAPFS=1, GMAG=0.00069, AREA=11, ZONE=311
#
#Replace the 60 kV Bus Tie
#
OLDSECDD  33650, 33662, CKT=1, SEC=1, STATUS=1,MVA1=208, MVA2=208
```

MISCELLANEOUS DATA

- PG&E will construct, own, and finance the project
- PG&E will be the planned operator of the project

ATTACHMENTS

1. Scope Diagram
2. Demand Forecast
3. Power Flow Summary
4. Pre and Post Project Power Flow Plots

Attachment 1: Scope Diagram

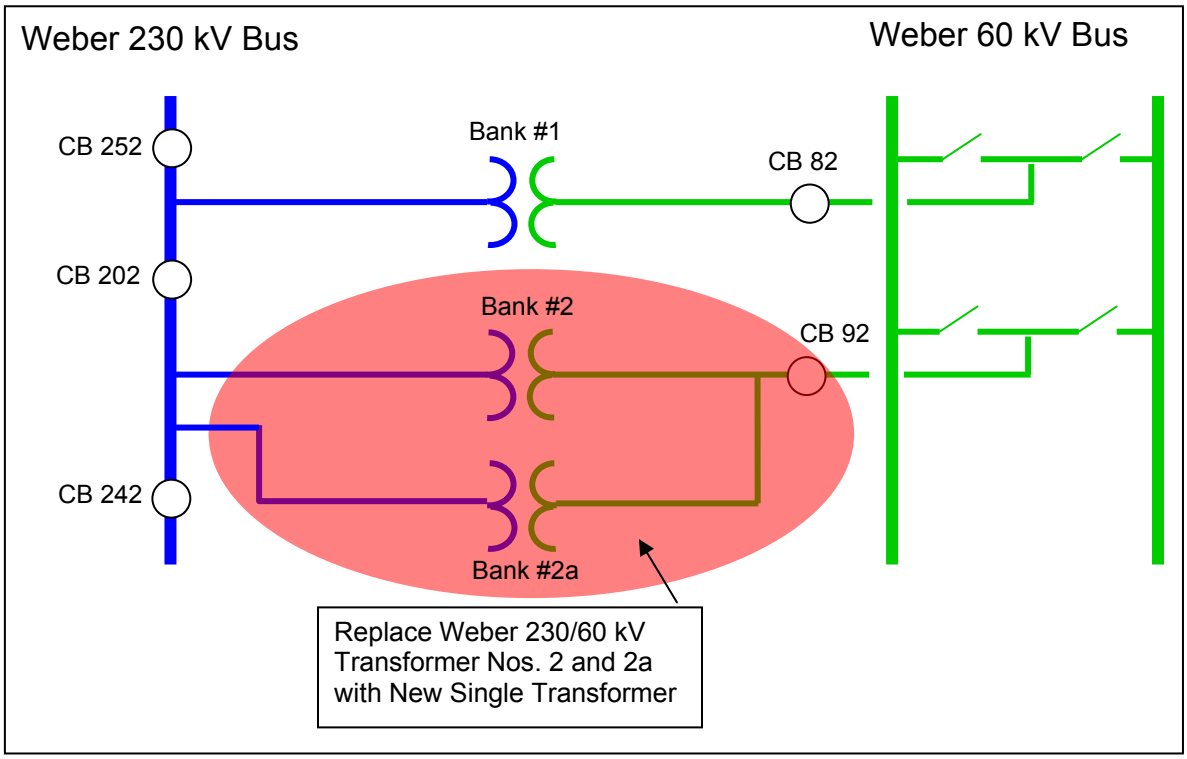

Figure 4-58: Scope Diagram

Attachment 2: Demand Forecast

Table 4-24: Weber 230/60 kV Transformers Demand Forecast

Demand	2010 (MW)	2011 (MW)	2012 (MW)	2013 (MW)	2014 (MW)	Growth Rate (MW/Year)
Load Fed by Weber 230/60 kV Transformer Nos. 1, 2, and 2a.	233.2	237.3	240.9	243.5	246.2	3.3

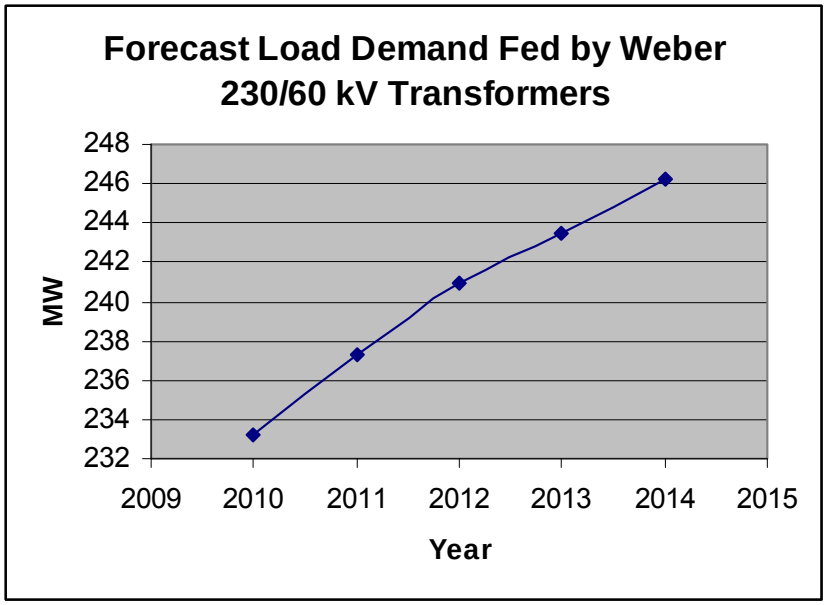

Figure 4-59: Weber 230/60 kV Transformers Demand

Attachment 3: Power Flow Summary

Table 4-25: Power Flow Summary

Contingency	Facility Affected	2011 (Pre-Project)	2012 (Pre-Project)	2013 (Pre-Project)	2014 (Pre-Project)	2014 (Post-Project)
Weber 230/60 Transformer No. 1 (L-1)	Weber 230/60 Transformer Nos. 2 and 2a	115%	119%	120%	121%	78%
Weber 230/60 Transformer Nos. 2 and 2a	Weber 60 kV Bus Tie	106%	109%	110%	111%	65%

Attachment 4: Pre and Post Power Flow Plots Summary

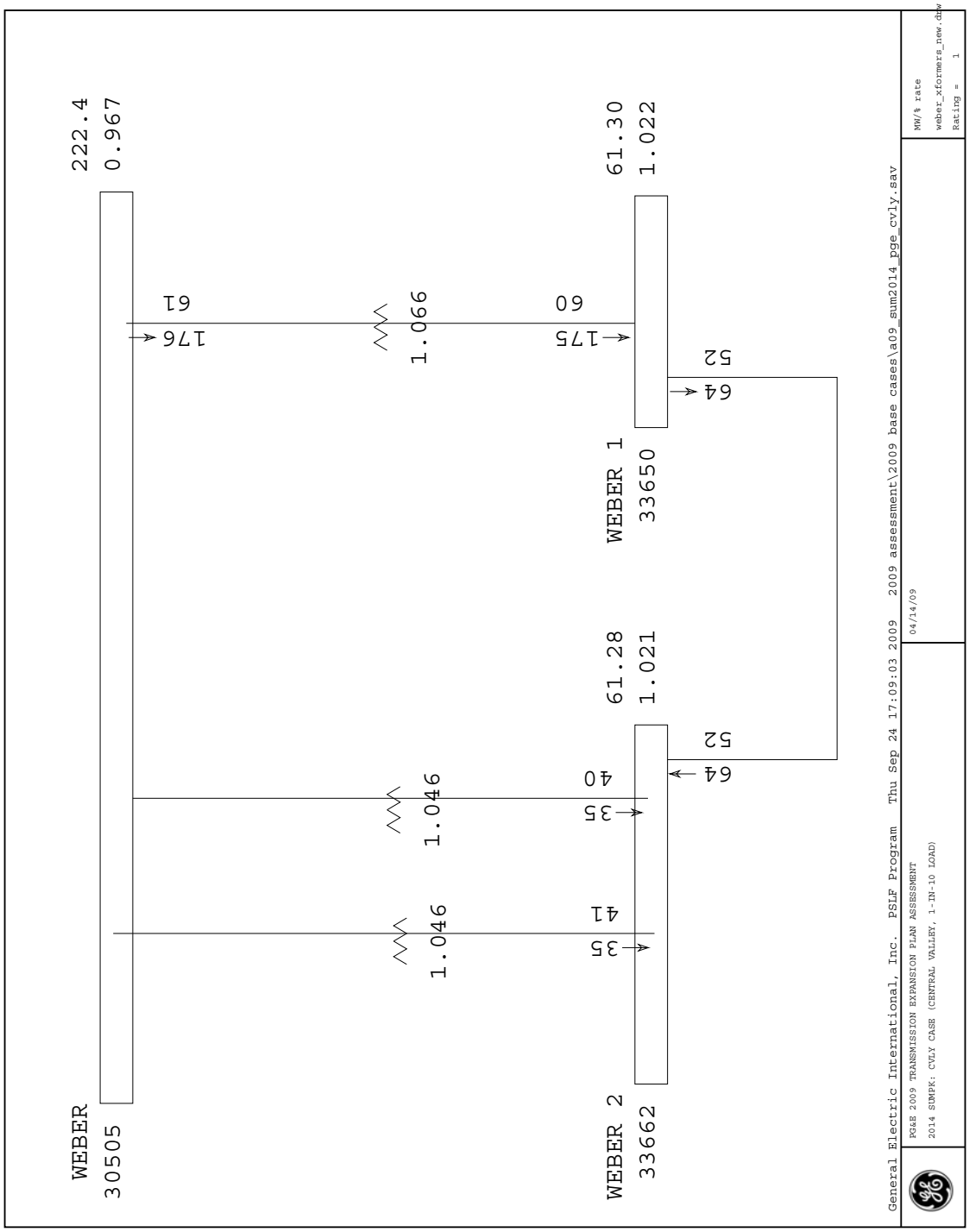

Figure 4-60: Pre-Project – 2014 Normal Conditions

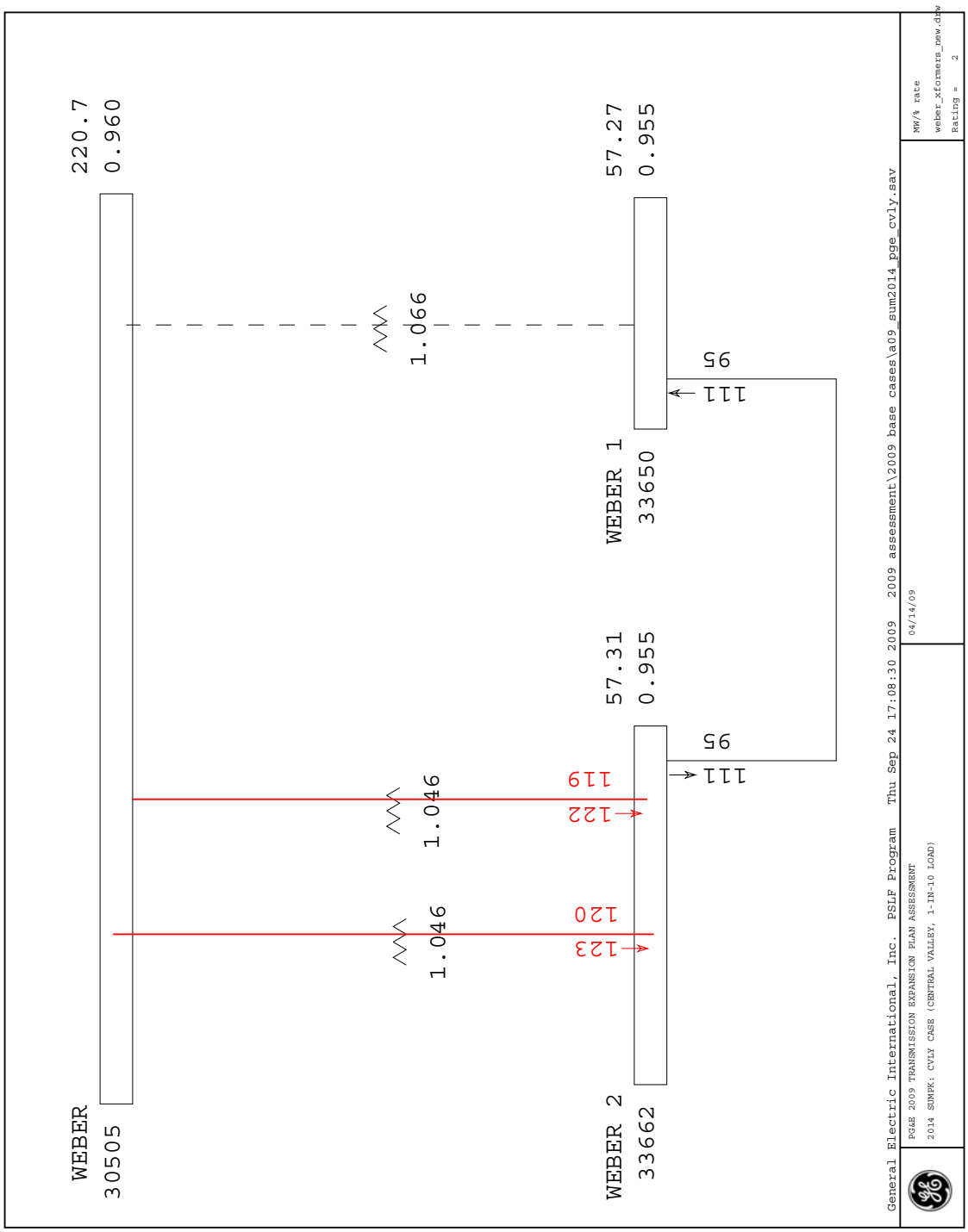

Figure 4-61: Pre-Project – 2014 Loss of the Weber 230/60 kV Transformer No. 1

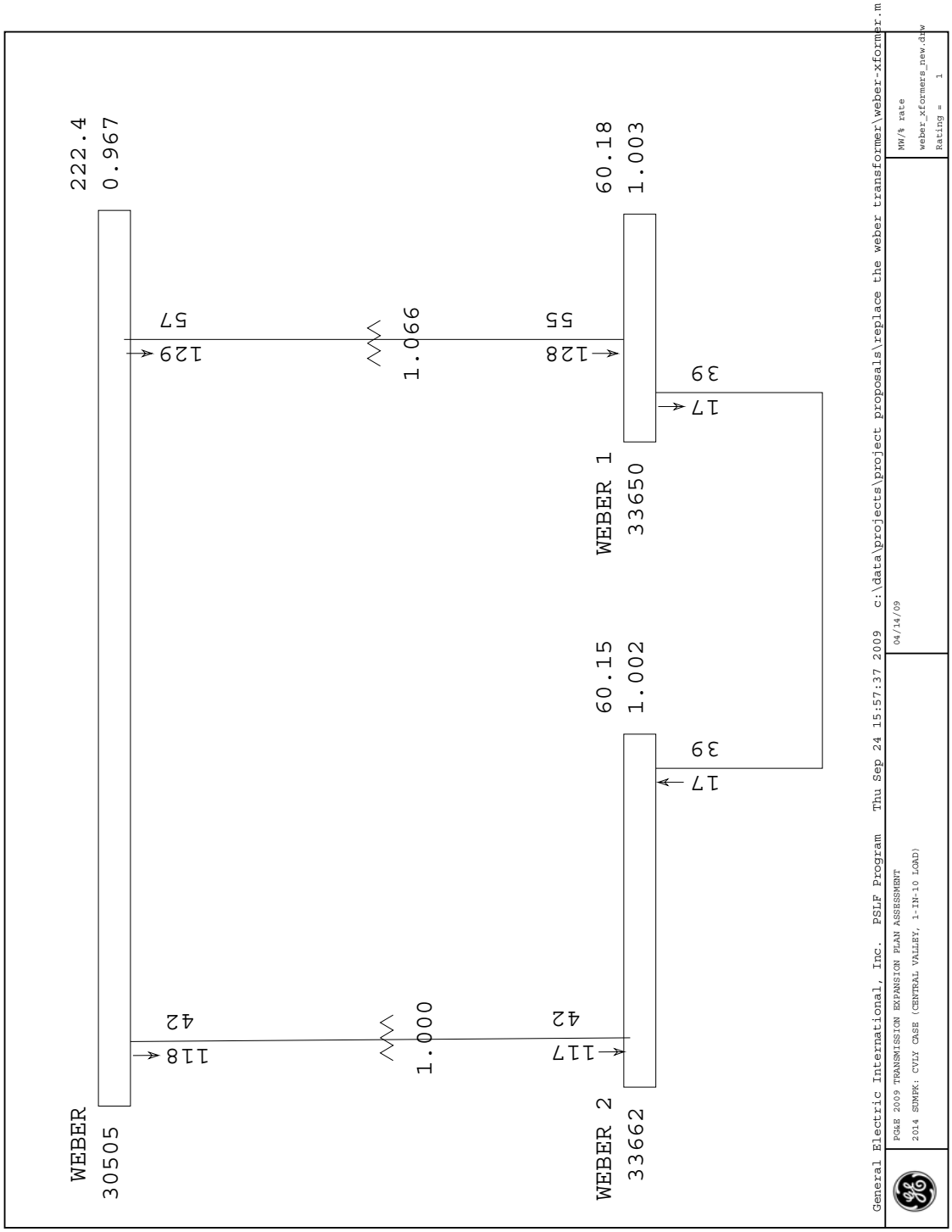

Figure 4-62: Post-Project – 2014 Normal Conditions

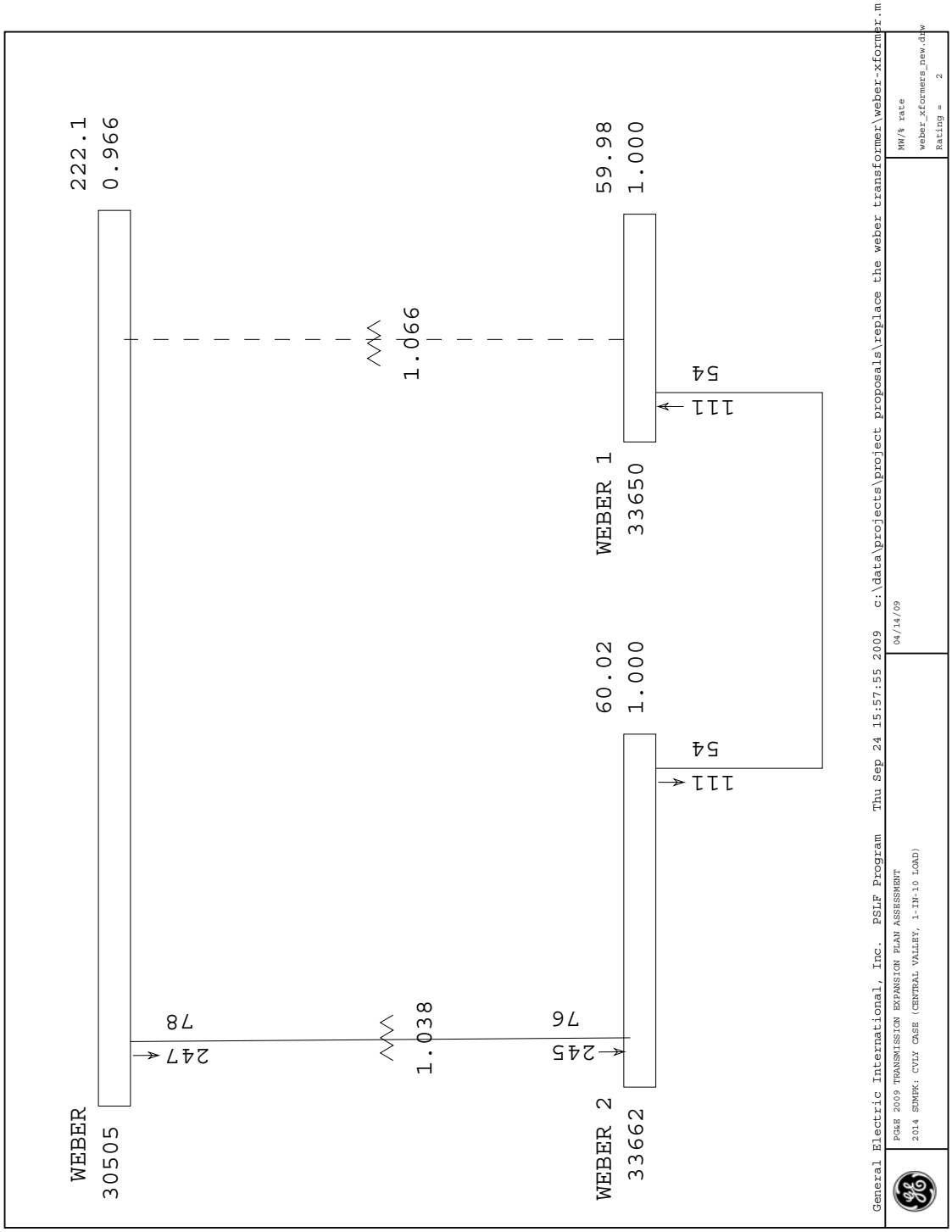

Figure 4-63: Post-Project – 2014 Loss of the Weber 230/60 kV Transformer No. 1

Reedley-Orosi 70 kV Line Reconductor

TARGETED IN-SERVICE DATE

May 2013

PURPOSE AND BENEFIT

Reliability – NERC compliance

PROJECT CLASSIFICATION

This is a new project.

DESCRIPTION AND SCOPE OF PROJECT

Reconductor the Reedley-Orosi 70 kV Line and install shunt capacitors at Dinuba Substation. The project scope would include reconductoring approximately 2 miles of the Reedley-Orosi 70 kV line from Orosi Jct to Orosi Substation with a conductor rated to handle up to 600 Amps and 700 Amps under summer normal and summer emergency conditions, respectively. In addition, 20 MVARs of shunt capacitors will be installed at Dinuba Substation.

This project is expected to cost between $2.5M and $4M.

BACKGROUND

Orosi Substation is located in Tulare County and is part of Pacific Gas and Electric's Fresno Division. Orosi Substation has two 70/12 kV distribution transformers rated for a total capacity of 26 MVA. The local 70 kV loop surrounding Orosi Substation includes Dinuba, Dunlap, Stone Corral, and Sand Creek Substations. The 70 kV loop loaded up to 64 MW in 2008 serving 17,000 customers. The total peak demand for this area is expected to grow at a rate of just over 2.0% per year.

The 70 kV system at Reedley consists of four 70 kV transmission lines in addition to the two 115/70 kV transformer banks: Sanger-Reedley 70 kV Line, Tivy Valley-Reedley 70 kV Line, Reedley-Orosi 70 kV Line, and the Reedley-Dinuba 70 kV Line. One 10 MVA generator is located at Dinuba Energy Center off the Reedley-Dinuba 70 kV Line.

Planning studies have concluded that with the Reedley-Dinuba 70 kV Line outage, under summer peak load conditions, the Reedley-Orosi (Orosi Jct-Orosi) 70 kV Line will

be loaded to 101% of its emergency ratings by 2014. Additionally, voltage levels at Dinuba Substation will drop below 0.90 Per Unit for the same outage.

BASE CASE AND STUDY ASSUMPTIONS

PG&E used base cases and assumptions approved in the CAISO Unified Planning Assumptions and Study Plan for the 2009 Transmission Planning Process cycle.

STUDY CRITERIA

CAISO grid planning criteria
NERC Transmission Planning Reliability Standards

OTHER ALTERNATIVES CONSIDERED

Alternative 1: Status Quo

This alternative is not recommended. This alternative does not address load growth and reliability concerns.

PROJECT SCHEDULE

- Environmental and Permitting Processes – TBD
- Design – TBD
- Major Equipment – TBD
- Construction – TBD

KEY ISSUES

- Land-Use Restrictions – TBD
- Environmental Concerns – TBD
- Special Metering or Protection - None
- Common Mode Exposure Items - None
- Interaction with other Projects or Studies – Reedley-Dinuba 70 kV Line Reconductor

GEPSLF MODELING INFORMATION

```
#Reconductors 1.93 miles of 397.5 AAC with 715.5 AAC of the
#Reedley-Orosi 70 kV Line from Orosi Jct-Orosi Substation
#Install 10 MVAR of Reactive Support at Dinuba
OLDSECDD  34502, 34526, CKT=1, SEC=1,+
        RPU=0.0057349, XPU=0.02771, BPU=0.00057777,+
        MVA1=77, MVA2=90, MVA3=118, MVA4=126
NEWSVD   34500, ID="v ", ST=1, TYPE=4, VBAND=0.01,+
     BINIT=0,  N0=4, B0=5, AREA=14, ZONE=314, OWN=390
```

MISCELLANEOUS DATA

- PG&E will construct, own, and finance the project
- PG&E will be the planned operator of the project

ATTACHMENTS

1. Single Line Diagrams
2. Demand Forecast
3. Power Flow Summary
4. Pre and Post Project Power Flow Plots

Attachment 1: Scope Diagram

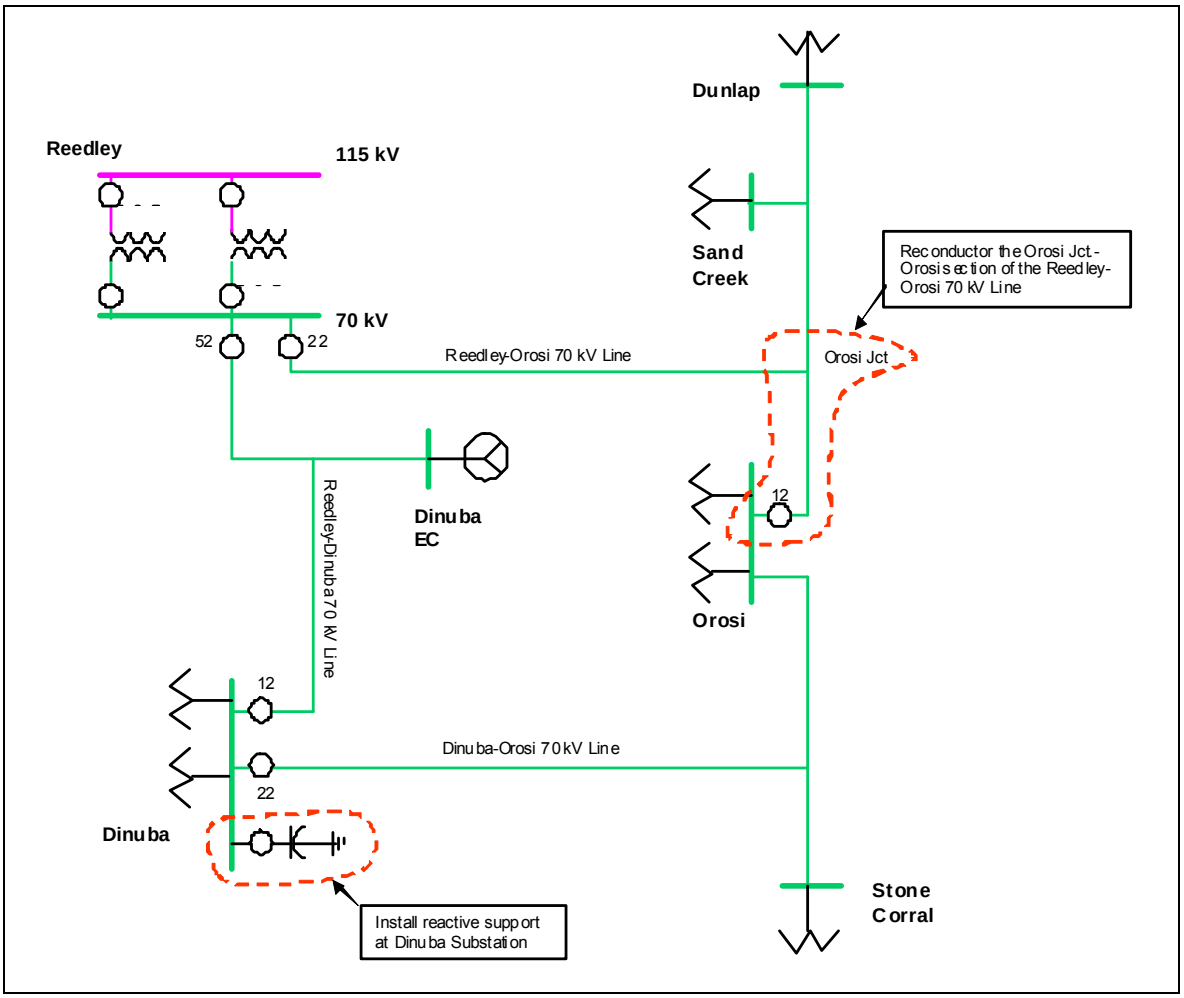

Figure 4-64: Scope Diagram

Attachment 2: Demand Forecast

Table 4-26: Demand Forecast in the Orosi 70 kV Area

Substation/Bank	2010 (MW)	2011 (MW)	2012 (MW)	2013 (MW)	2014 (MW)	Growth Rate (MW/yr)
Dunlap Bank 1	3.5	3.5	3.6	3.6	3.7	0.1
Sand Creek Bank 1	4.0	4.1	4.2	4.2	4.3	0.1
Stone Corral Bank 2	4.1	4.3	4.4	4.5	4.7	0.1
Stone Corral Bank 3	2.8	2.9	3.0	3.1	3.2	0.1
Dinuba Bank 1	17.9	18.4	18.8	19.2	19.5	0.4
Dinuba Bank 2	12.1	12.4	12.7	12.9	13.2	0.3
Orosi Bank 1	9.0	9.2	9.4	9.6	9.8	0.2
Orosi Bank 2	6.6	6.8	6.9	7.1	7.2	0.1
Total Area Load	60.0	61.5	62.9	64.2	65.4	1.4

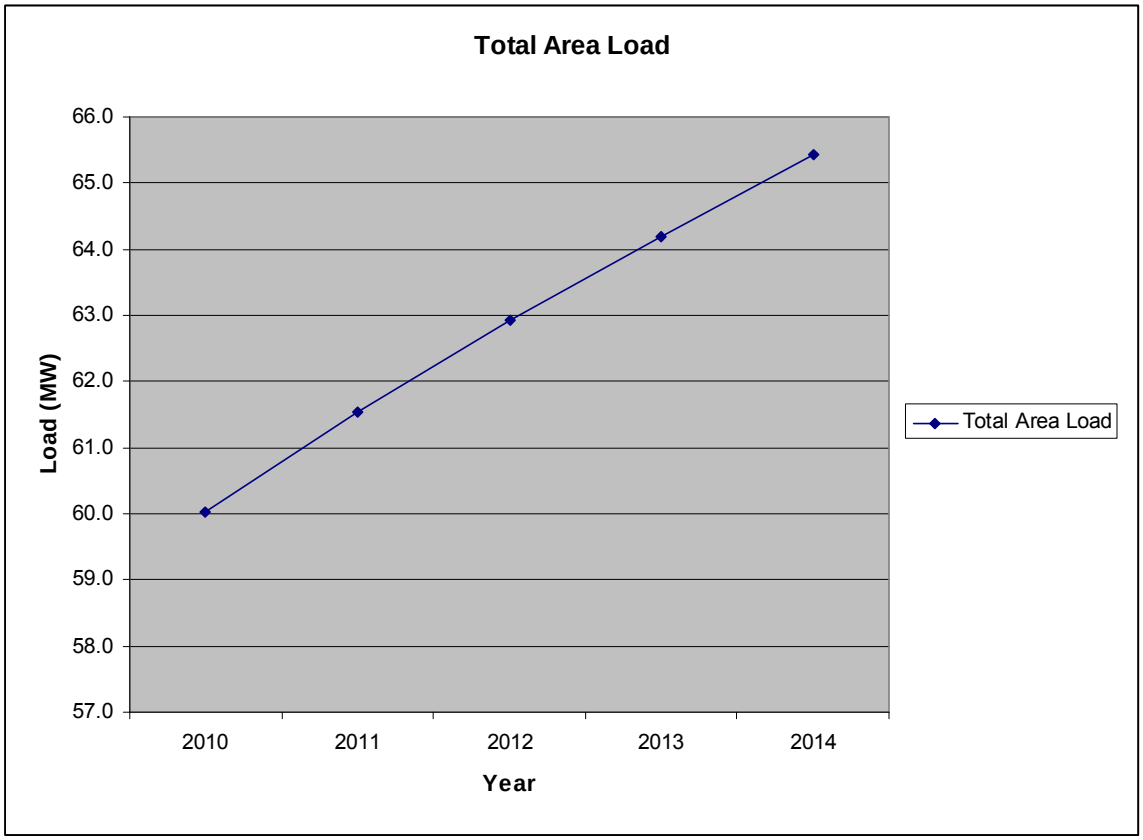

Figure 65: Demand Forecast Graph

Attachment 3

Table 27: Power Flow Results

			Pre Project						Post Project	
#	Facility	Facility Rating	2010	2011	2012	2013	2014	2019	2019	Contingency
1	Reedley-Orosi 70 kV Line	SE Rating 512 Amps	<95%	<95%	96%	98%	101%	112%	74%	Reedley-Dinuba 70 kV Line (L-1)
2	Dinuba 70 kV Bus	70 kV	0.92 p.u.	0.92 p.u.	0.92 p.u.	0.91 p.u.	0.91 p.u.	0.89 p.u.	0.97 p.u.	Reedley-Dinuba 70 kV Line (L-1)

Attachment 4

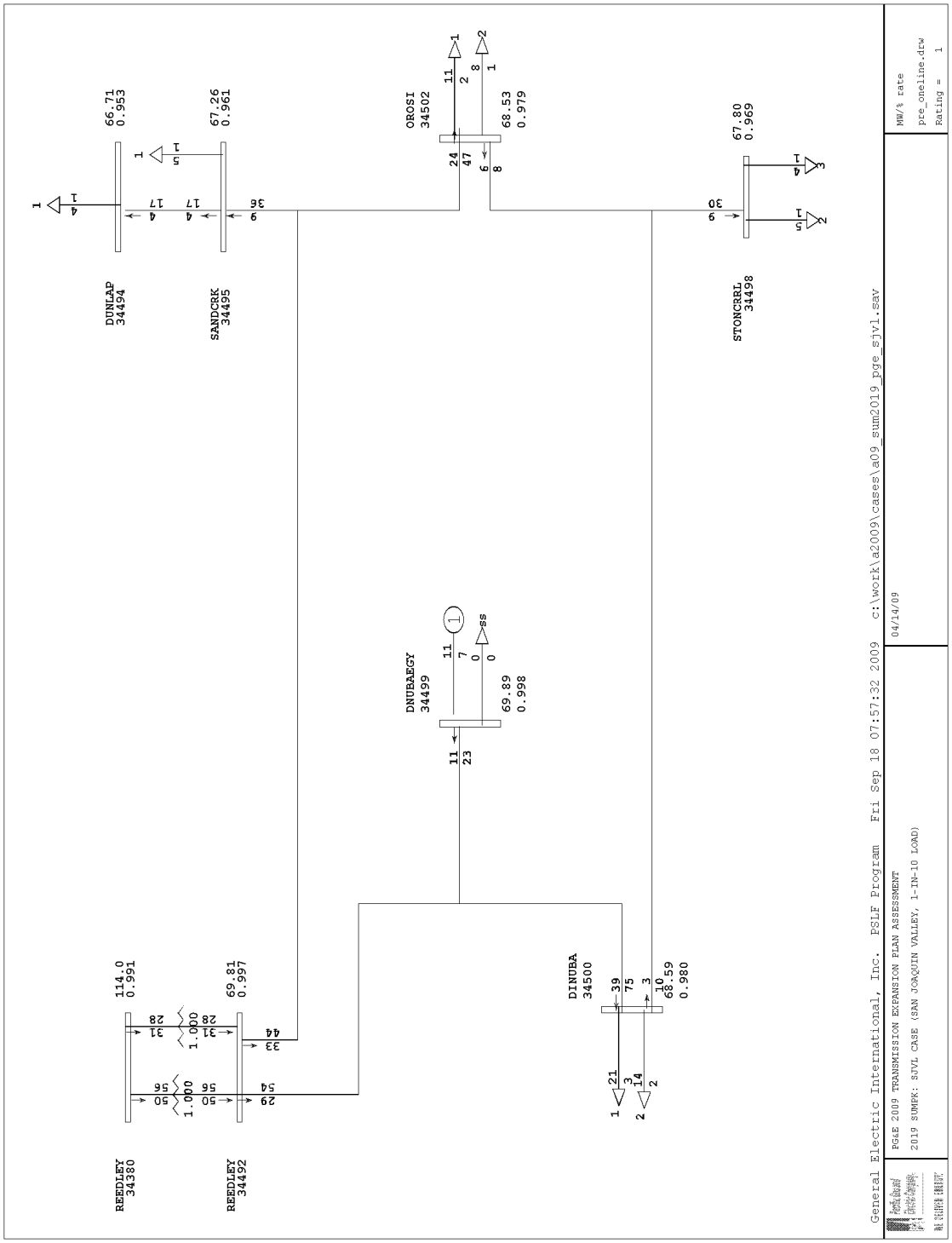

Figure 4-66: Pre Project – Normal Conditions

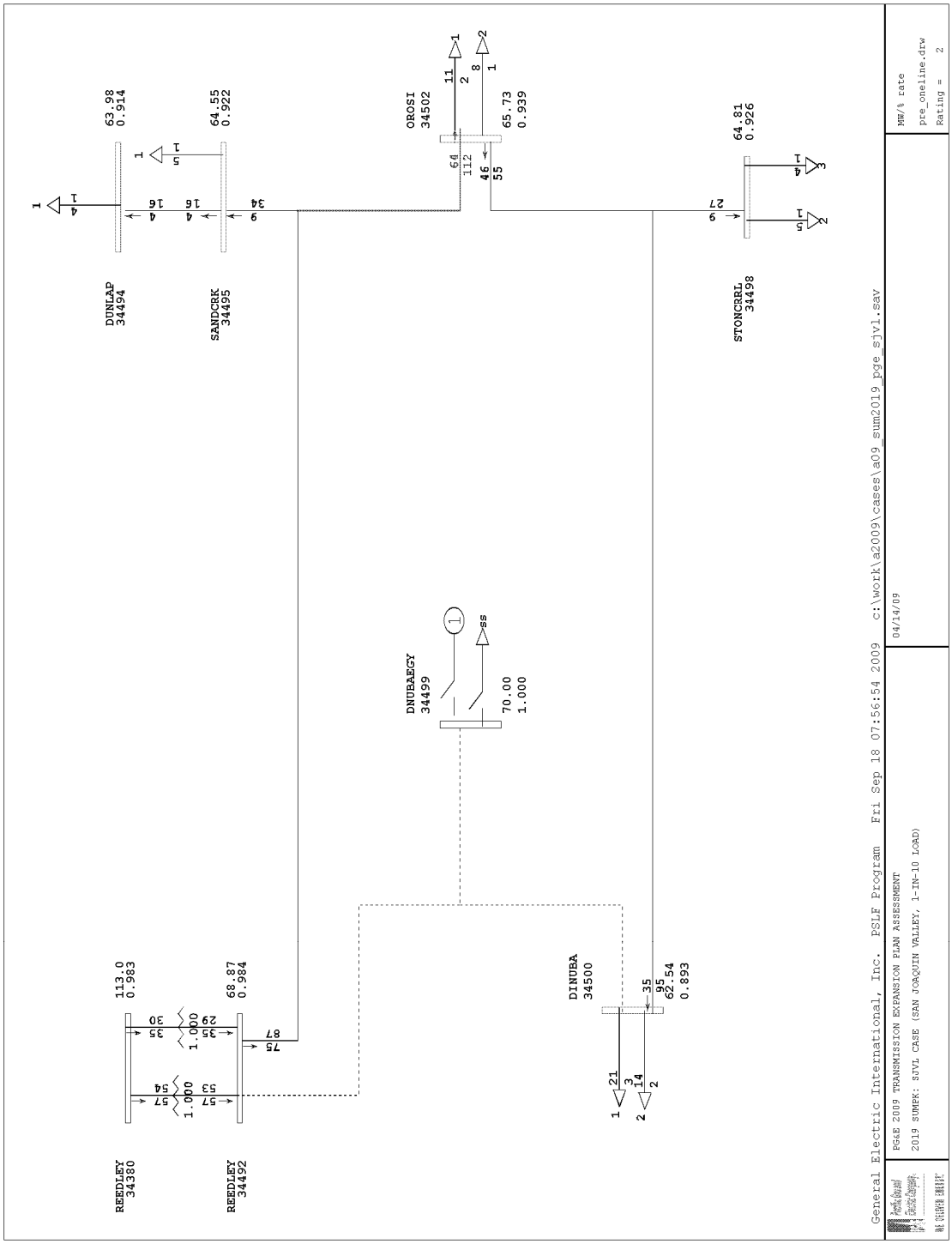

Figure 4-67: Pre Project – Reedley-Dinuba 70 kV Line Outage (L-1)

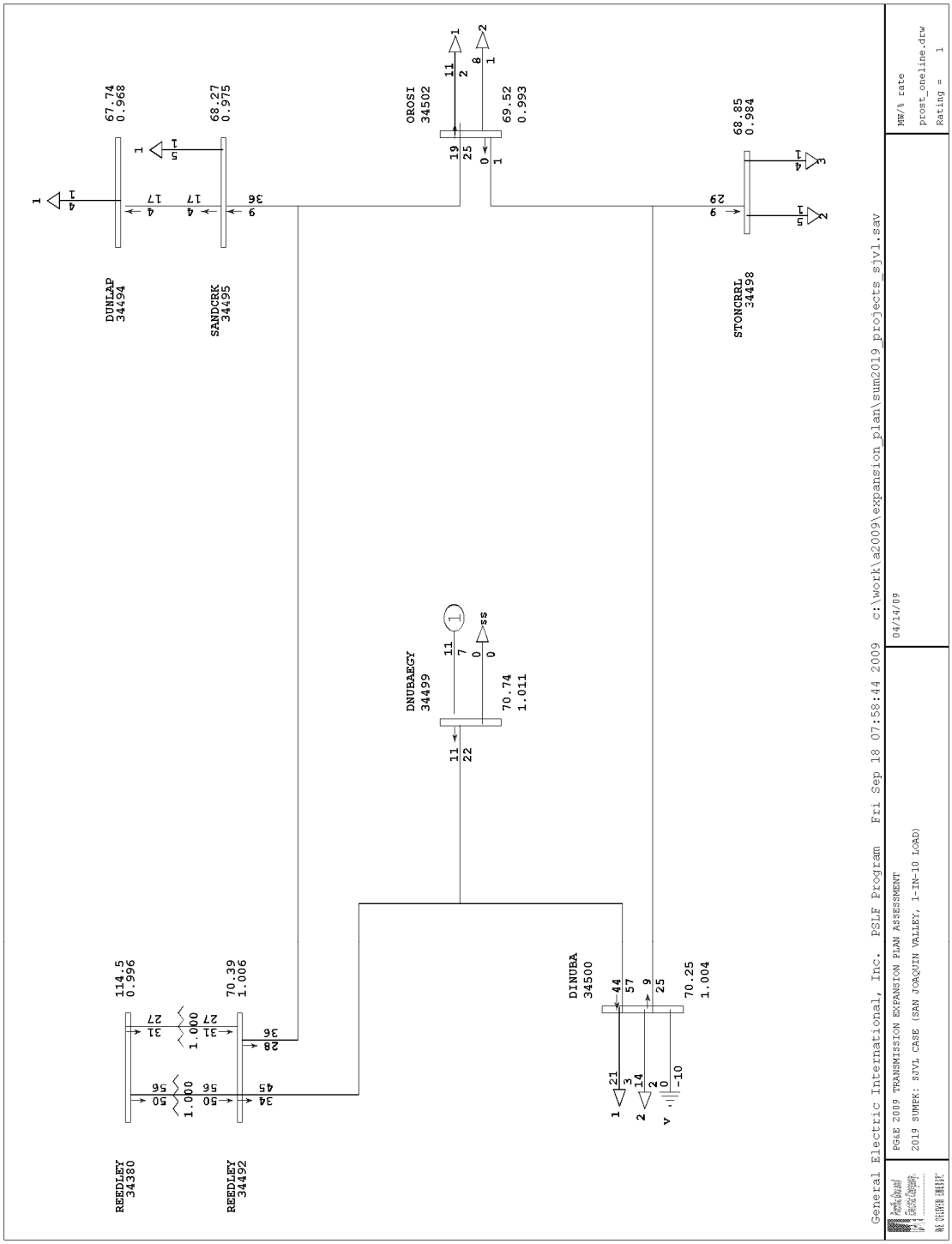

Figure 4-68: Post Project – Normal Conditions

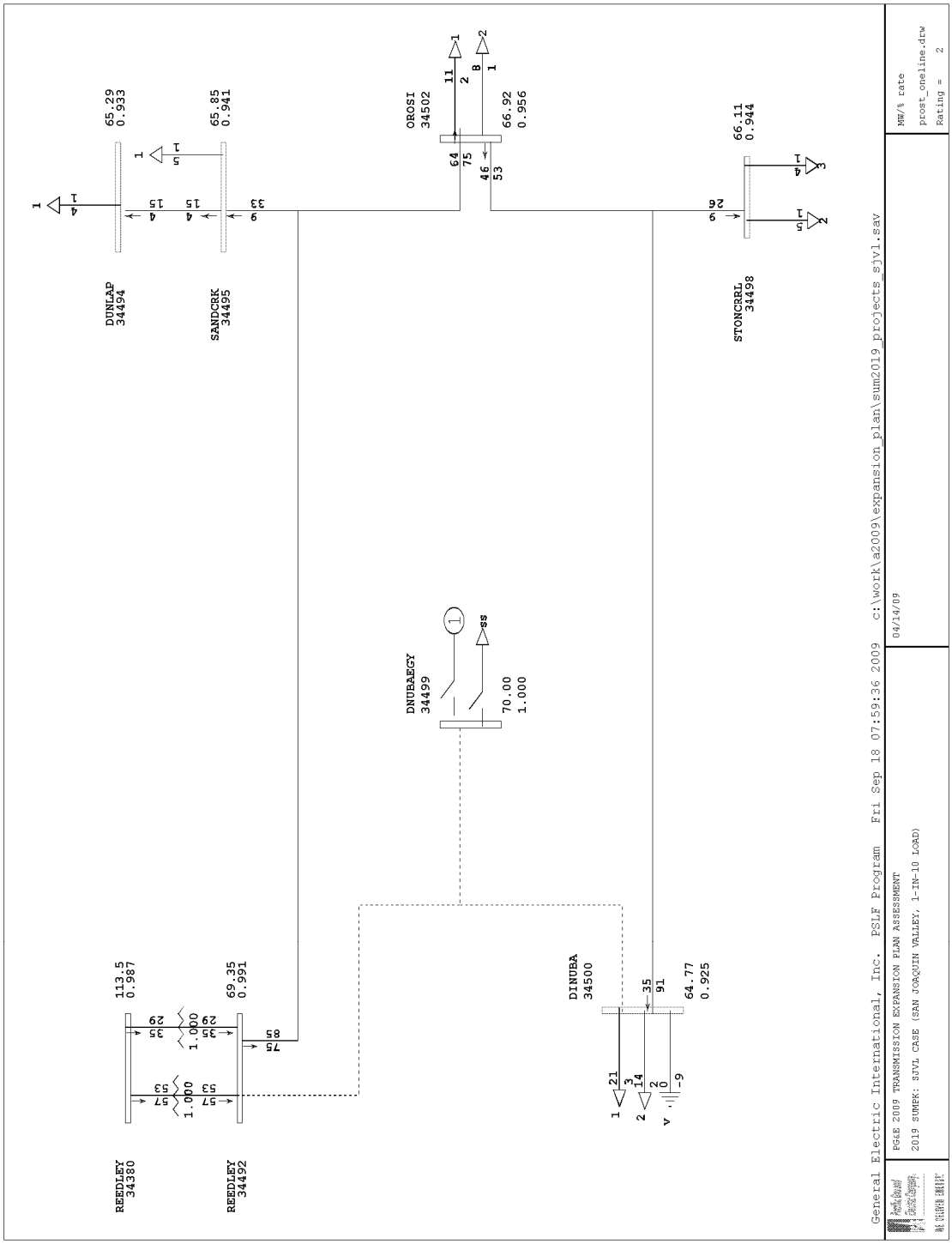

Figure 4-69: Post Project – Reedley-Dinuba 70 kV Line Outage (L-1)

Morro Bay 230/115 kV Transformer Addition Project

TARGETED IN-SERVICE DATE

May 2013

PURPOSE AND BENEFIT

Reliability – NERC compliance

PROJECT CLASSIFICATION

This is a new project.

DESCRIPTION AND SCOPE OF PROJECT

Install a new 230/115 kV transformer rated to handle at least 270 MVA at Morro Bay Substation.

In the interim period, the San Luis Obispo-Callendar 115 kV Line will be re-rated to handle the projected loads in 2010-2012 period.

This project is expected to cost between $8M and $10M.

BACKGROUND

Morro Bay Substation is located in San Luis Obispo County and is part of Pacific Gas and Electric's Los Padres Division. Morro Bay Substation has six 230 kV, and two 115 kV transmission lines. There is currently one 230/115 kV transformer located at Morro Bay Substation along with four generating units. The local 115 kV system surrounding Morro Bay Substation includes Goldtree, Foothill, and San Luis Obispo Substations. These substations loaded up to a combined 100 MW in 2008 serving 41,000 customers. The total peak demand for this area is expected to grow at a rate of just over 3.5% per year.

Planning studies have concluded that with the Morro Bay Transformer No. 6 outage, under summer peak load conditions, the Callender Switching Station-Mesa 115 kV Line will be loaded to 101% of its emergency ratings by 2011. Additionally, San Luis Obispo-Callender Switching Station 115 kV Line will be loaded to 101% by 2013 for the same outage.

BASE CASE AND STUDY ASSUMPTIONS

PG&E used base cases and assumptions approved in the CAISO Unified Planning Assumptions and Study Plan for the 2009 Transmission Planning Process cycle.

STUDY CRITERIA

CAISO grid planning criteria
NERC Transmission Planning Reliability Standards

OTHER ALTERNATIVES CONSIDERED

Alternative 1: Status Quo

This alternative is not recommended. This alternative does not address load growth and reliability concerns.

Alternative 1: Reconductor the Callender SW Station-San Luis Obispo and the Mesa-Callender SW Station 115 kV Lines

This alternative proposes to reconductor the San Luis Obispo-Callender Switching Station and the Mesa-Callender Switching Station 115 kV lines, a total of 16 miles. This alternative is not recommended because it does not protect against multiple NERC category "C3" contingencies.

PROJECT SCHEDULE

- Environmental and Permitting Processes – TBD
- Design – TBD
- Major Equipment – TBD
- Construction – TBD

KEY ISSUES

- Land-Use Restrictions – TBD
- Environmental Concerns – TBD
- Special Metering or Protection - None
- Common Mode Exposure Items - None
- Interaction with other Projects or Studies – None

GEPSLF MODELING INFORMATION

```
#Install 2nd 230/115 kV Transformer at Morro Bay
NEW_TRAN  FBUS=36252, TOBUS=30915, CKT=7, ZR=0.0019, ZX=0.0839, BMAG=-0.001400,+
MVA1=200, MVA2=220, MVA3=200, MVA4=220, VNOMF=115, VNOMT=230,    MVABASE=200,+
    STAT=1, TYPE=1, TAPF=1, REG=36252, VMAX=1.5, VMIN=.51,OWN=390,+
    STEPP=.00625, TMAX=1.5, TMIN=.5, TAPFP=1, TAPFS=1, GMAG=0, AREA=20, ZONE=320
```

MISCELLANEOUS DATA

- PG&E will construct, own, and finance the project
- PG&E will be the planned operator of the project

ATTACHMENTS

1. Scope Diagram
2. Demand Forecast
3. Power Flow Summary
4. Pre and Post Project Power Flow Plots

Attachment 1: Scope Diagram

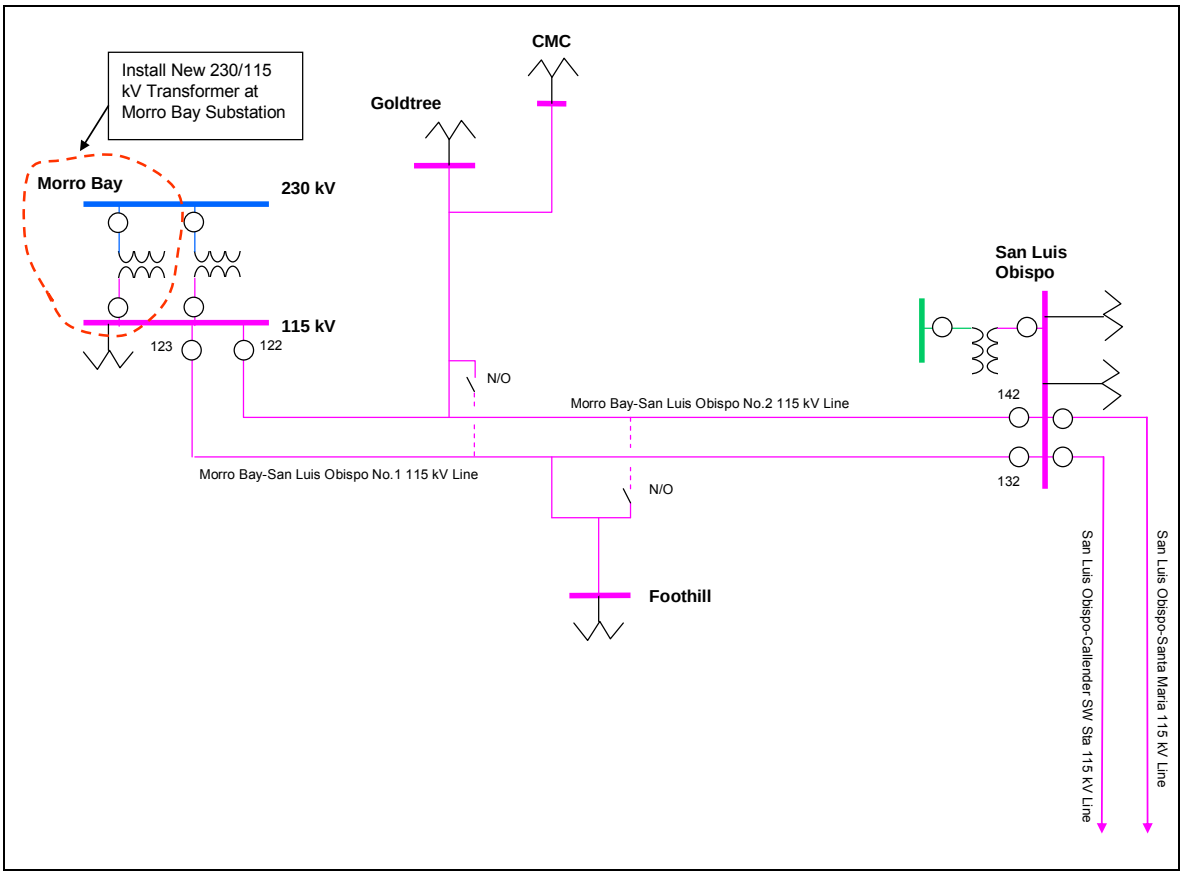

Figure 4-70: Scope Diagram

Attachment 2: Demand Forecast

Table 4-28: Demand Forecast in the Orosi 70 kV Area

Substation/Bank	2010 (MW)	2011 (MW)	2012 (MW)	2013 (MW)	2014 (MW)	Growth Rate (MW/yr)
Foothill #1	8.2	8.3	9.3	9.4	9.4	0.3
Morro Bay #11	10.5	10.7	12.0	12.1	11.9	0.4
San Luis Obispo #4	17.4	17.6	19.7	19.9	20.0	0.7
San Luis Obispo #6	26.7	27.1	30.3	30.6	30.8	1.0
Goldtree #1	11.9	12.0	13.4	13.5	13.7	0.5
CMC	5.0	5.0	5.0	5.0	5.0	0.0
Total Area Load	79.7	80.8	89.7	90.5	90.9	2.8

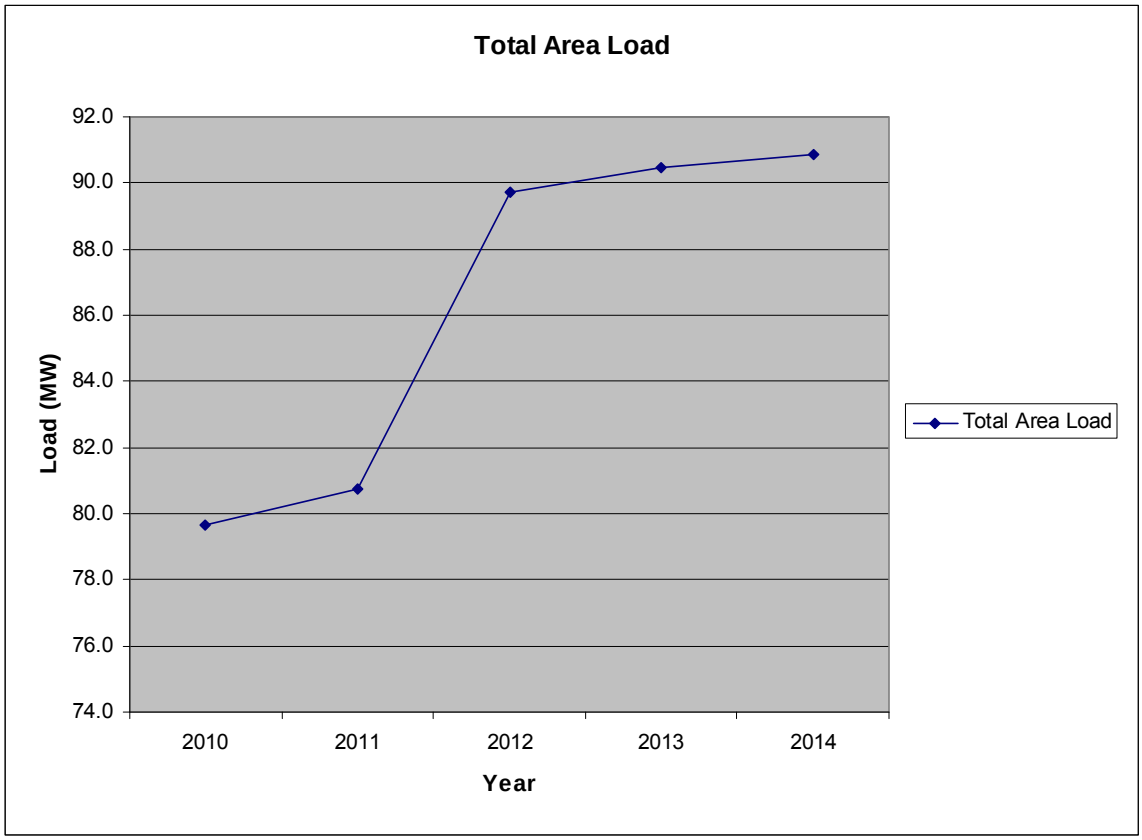

Figure 4-71: Demand Forecast Graph

Attachment 3: Power Flow Summary

Table 4-29: Power Flow Results

			Pre Project						Post Project	
#	Facility	Facility Rating	2010	2011	2012	2013	2014	2019	2019	Contingency
1	San Luis Obispo-Callender SW Sta 115 kV Line	SE Rating 371 Amps	99%	101%	102%	103%	104%	106%	52%	Morro Bay 230/115 kV Transformer No. 6
2	Callender SW Sta-Mesa 115 kV Line	SE Rating 371 Amps	96%	98%	100%	101%	102%	103%	50%	Morro Bay 230/115 kV Transformer No. 6

Attachment 4: Pre and Post Power Flow Plots Summary

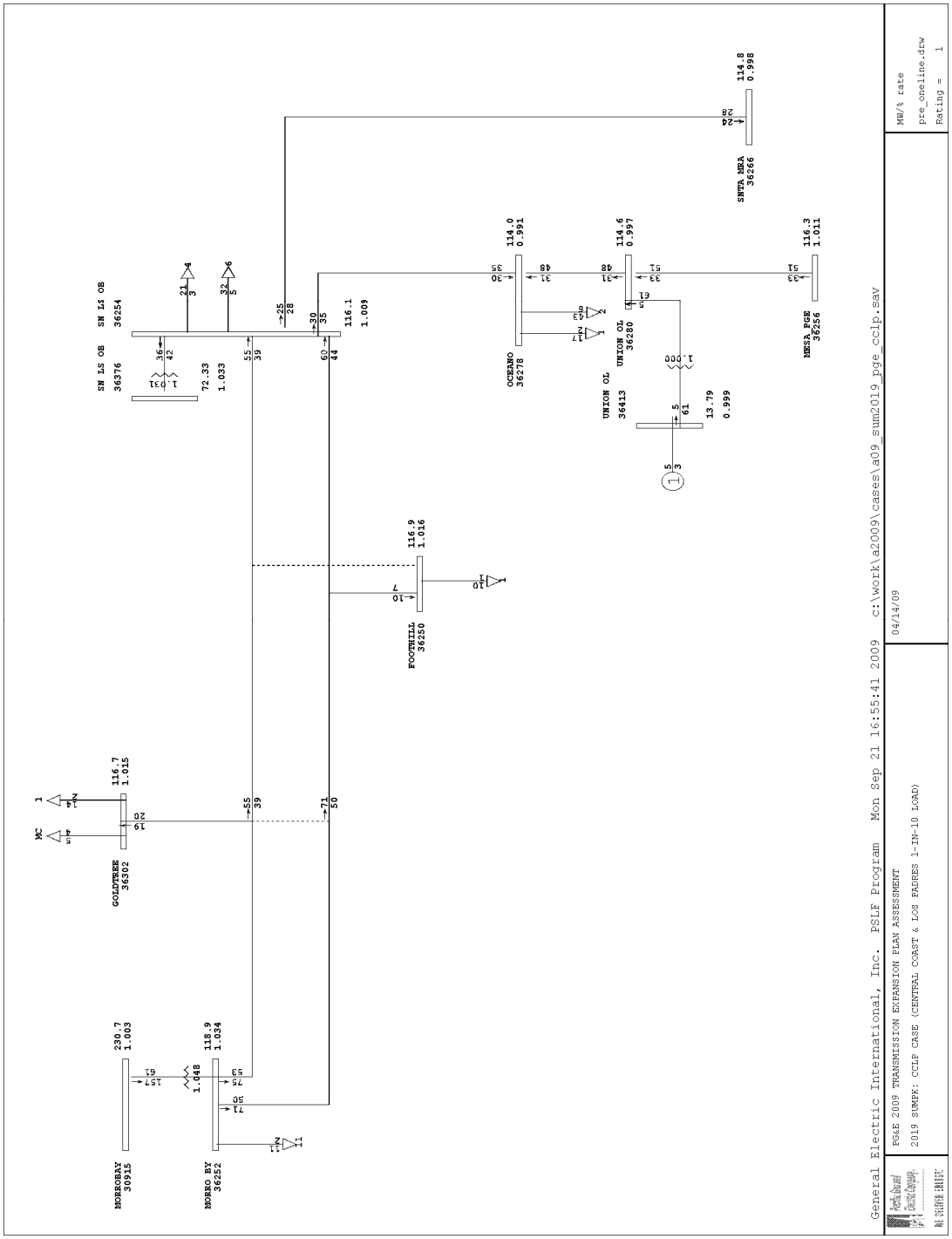

Figure 4-72: Pre Project – Normal Conditions

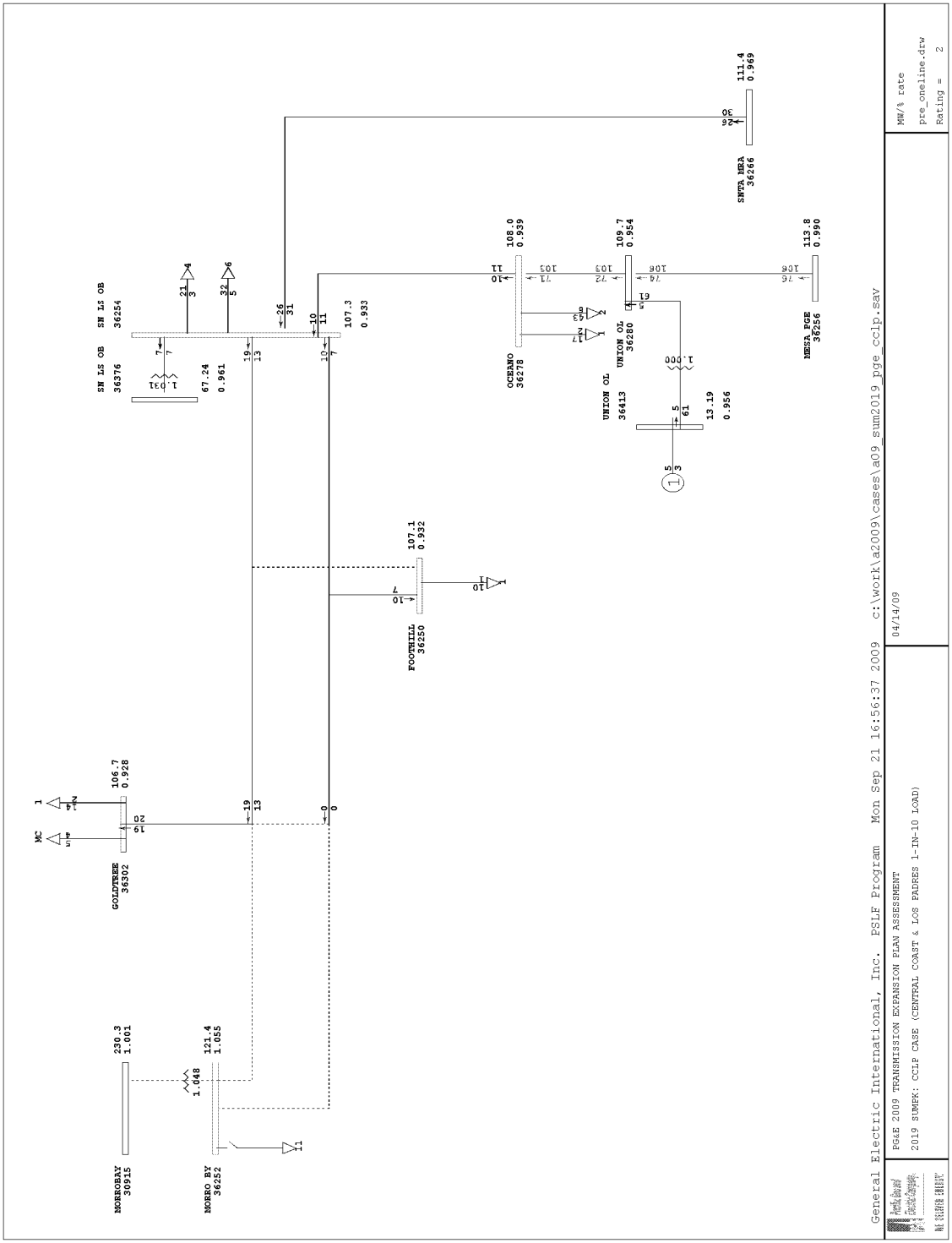

Figure 4-73: Pre Project – Morro Bay 230/115 kV Transformer No. 6 (T-1)

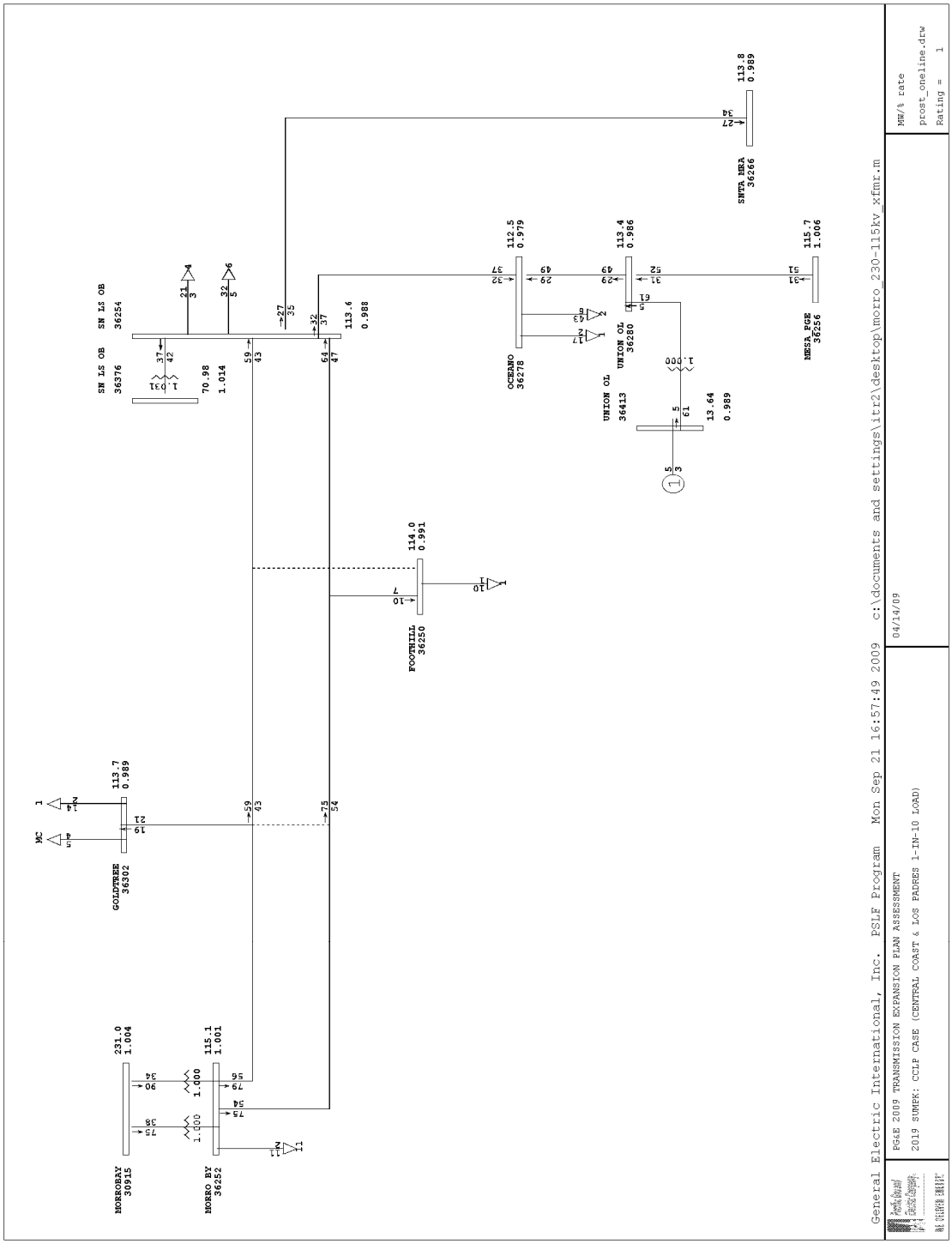

Figure 4-74: Post Project – Normal Conditions

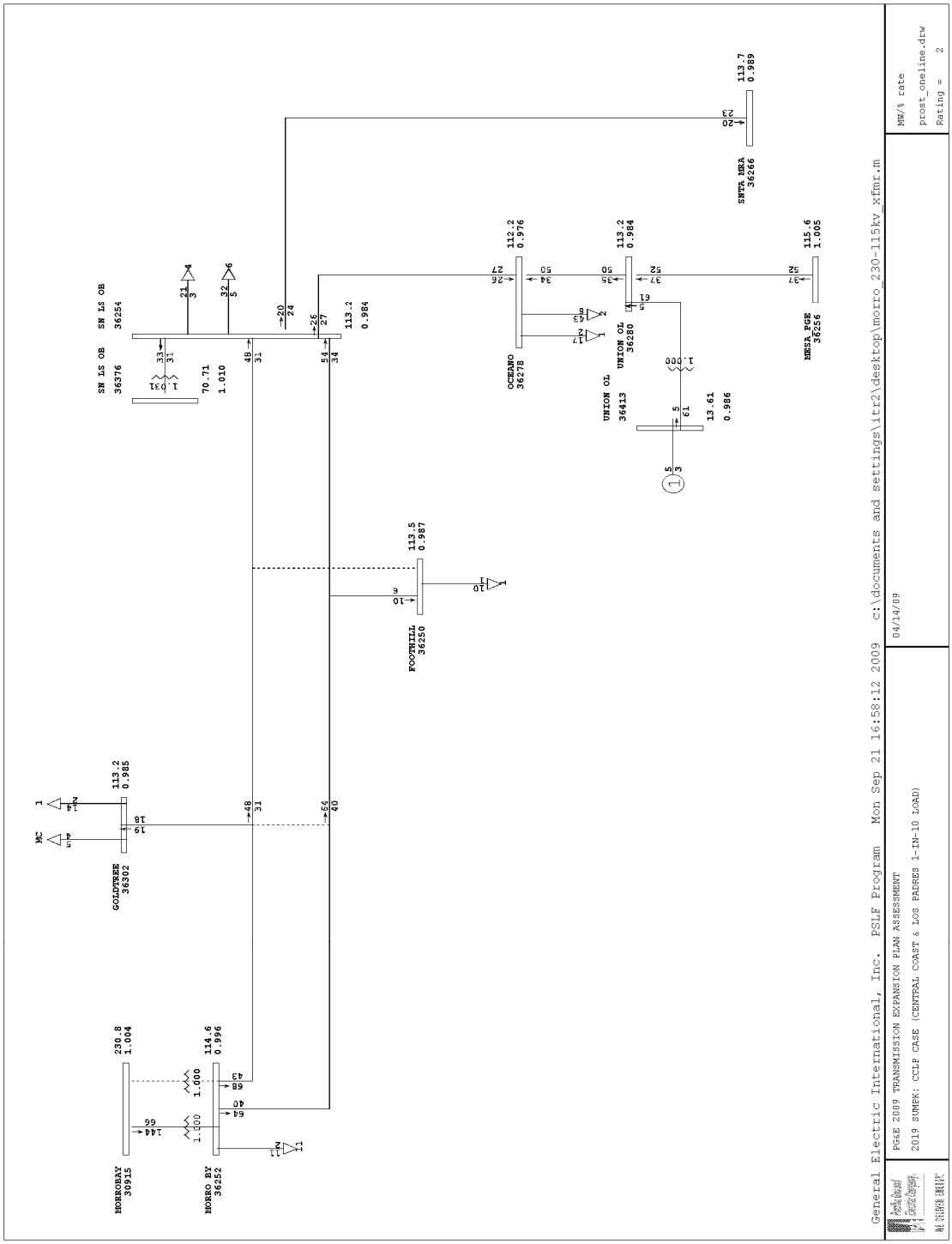

Figure 4-75: Post Project – Morro Bay 230/115 kV Transformer No. 6 (T-1)

2014 Projects

Cottonwood-Red Bluff 60 kV Line Reconductor

TARGETED IN-SERVICE DATE

May 2014 or earlier

PURPOSE AND BENEFIT

Reliability – NERC Compliance

PROJECT CLASSIFICATION

This is a new project.

DESCRIPTION AND SCOPE OF PROJECT

The project scope is to:

- Reconductor the Cottonwood-Red Bluff 60 kV Line (16.5 miles including 2/0 CU, 397 AAC, 300 AAC, 4/0 AAC, and 4/0 ACSR conductors) with a conductor rated at least 650 Amps emergency
- Upgrade all other equipment to achieve the maximum conductor rating

This project is expected to cost between $10M and $15M.

BACKGROUND

Red Bluff Substation serves electric customers in Tehama County through the Cottonwood-Red Bluff and Coleman-Red Bluff 60 kV Lines. The 2010 projected peak load at Red Bluff is approximately 32.6 MW and is forecast to increase at a rate of 0.7 MW or 2.1% per year. Other loads on the Coleman-Red Bluff 60 kV Line include Dairyville, Vina, and Los Molinas.

The Cottonwood-Red Bluff 60 kV Line is approximately 16.5 miles long consisting of 2/0 CU, 300 AAC, 397 AAC, 4/0 AAC, and 4/0 ACSR conductors. The connections to Gerber and Anita are normally open. The Cottonwood-Red Bluff 60 kV Line overloads by 1% in 2011 following an outage of the Coleman-Red Bluff 60 kV Line. This line is also projected to overload by 2% in 2019 under normal conditions.

BASE CASE AND STUDY ASSUMPTIONS

PG&E used base cases and assumptions approved in the CAISO Unified Planning Assumptions and Study Plan for the 2009 Transmission Planning Process cycle as part of the 2010 CAISO Transmission Planning Process.

STUDY CRITERIA

CAISO grid planning criteria
NERC Transmission Planning Reliability Standards

OTHER ALTERNATIVES CONSIDERED

Alternative 1: Status Quo

This alternative is not recommended because it does not mitigate the expected capacity constraints.

PROJECT SCHEDULE

- Environmental and Permitting Processes – TBD
- Design – TBD
- Major Equipment – Conductors
- Construction – TBD
- Operation Date – May 2014 or earlier

KEY ISSUES

- Land-Use Restrictions – There are no land-use restrictions with this project.
- Environmental Concerns – TBD
- Special Metering or Protection – TBD
- Common Mode Exposure Items – None
- Interaction with other Projects or Studies – None

GEPSLF MODELING INFORMATION

```
##########################################################################################################
#Line Reconductor
#-----------------------------------------------------------------------------------------------------
#
#Cottonwood-Red Bluff 60 kV Line
OLDSECDD  31604, 31607, CKT=1, RPU=0.047984239, XPU=0.313509991, +
                    BPU=0.003597603, MVA1=66, MVA2=77, MVA3=101, MVA4=108          #longer section
OLDSECDD  31607, 31608, CKT=1, RPU=0.000931481, XPU=0.006085929, +
                    BPU=0.0000698, MVA1=66, MVA2=77, MVA3=101, MVA4=108            #shorter section
```

MISCELLANEOUS DATA

- PG&E will construct, own, and finance the project
- PG&E will be the planned operator of the project

ATTACHMENTS

1. Scope Diagram
2. Demand Forecast
3. Power Flow Summary
4. Pre and Post Project Power Flow Plots

Attachment 1: Scope Diagram

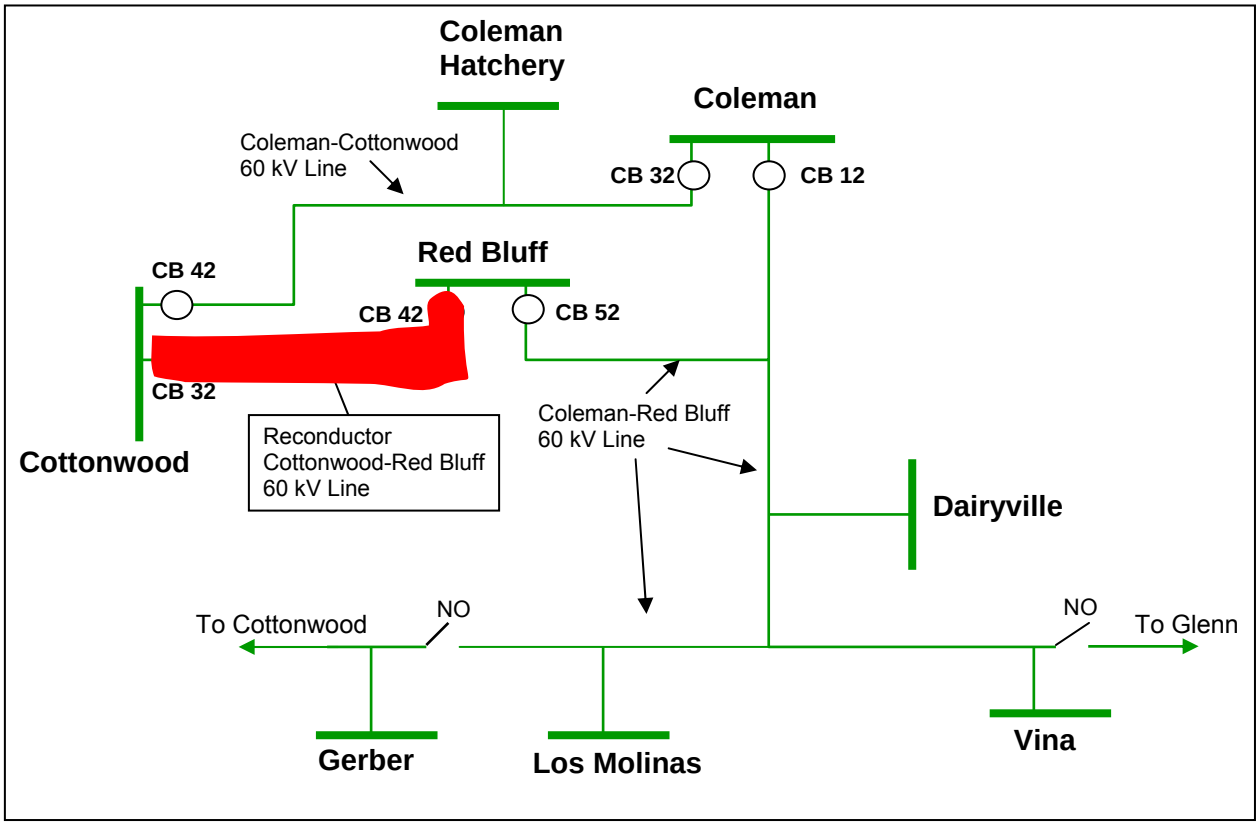

Figure 4-76: Scope Diagram

Attachment 2: Demand Forecast

Table 4-30: Demand Forecast

Substation	2010 (MW)	2011 (MW)	2012 (MW)	2013 (MW)	2014 (MW)	Growth Rate (MW/Year)
Red Bluff	32.6	33.3	34	34.6	35.3	0.7
Dairyville	4	4.2	4.3	4.4	4.5	0.1
Vina	1.7	1.7	1.7	1.8	1.8	0.0
Los Molinas	7.3	7.4	7.6	7.7	7.8	0.1
Totals	45.6	46.6	47.6	48.5	49.4	0.9

Attachment 3: Power Flow Summary

Figure 4-77: Power Flow Summary

Contingency	Facility Affected	2011 (Pre-Project)	2012 (Pre-Project)	2013 (Pre-Project)	2014 (Pre-Project)	2014 (Post-Project)
Normal	Cottonwood – Red Bluff 60 kV Line	86%	88%	90%	92%	42%
Coleman – Red Bluff 60 kV Line		101%	103%	105%	107%	45%

Attachment 4: Pre and Post Power Flow Plots

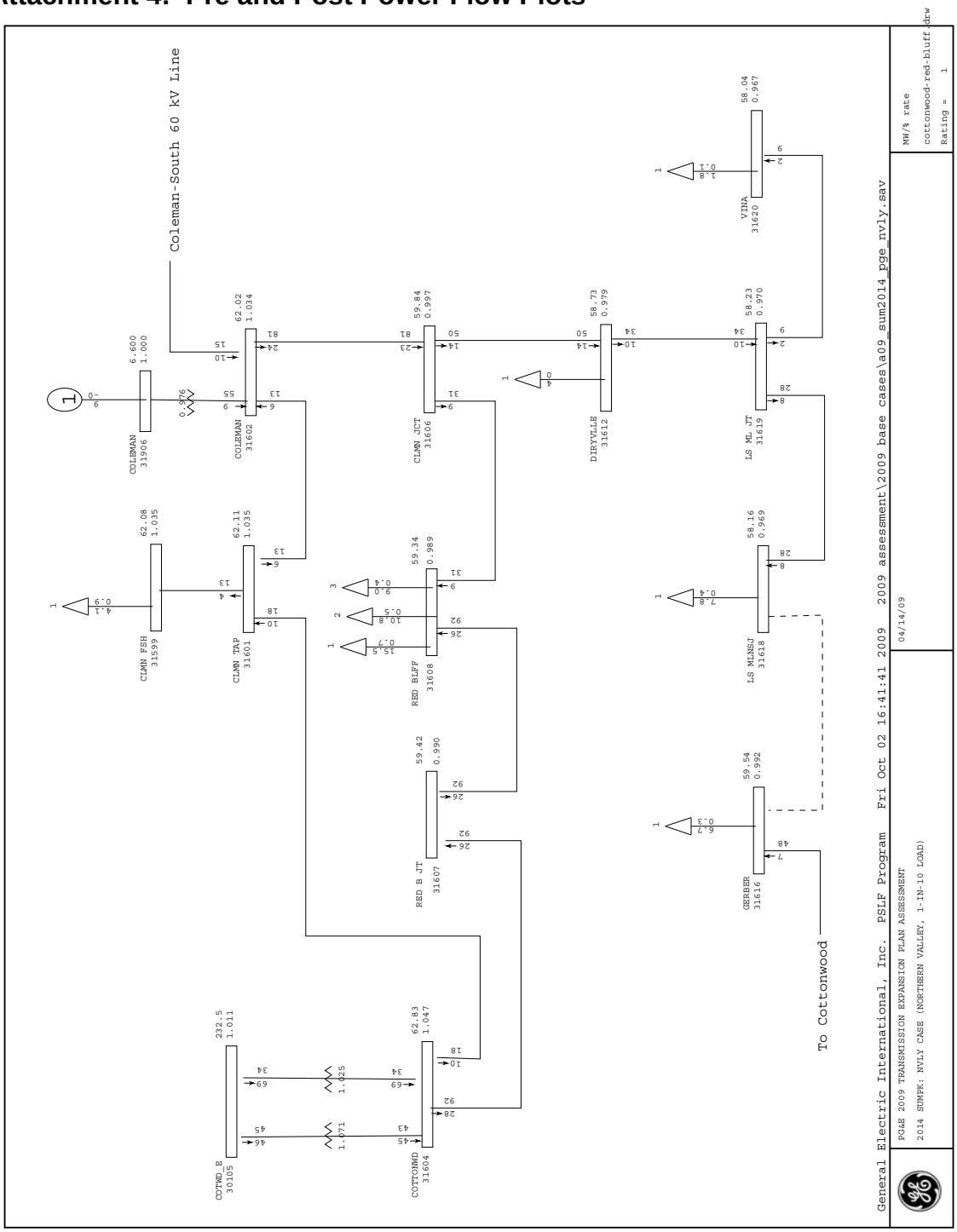

Figure 4-78: Pre-Project – 2014 Normal Conditions

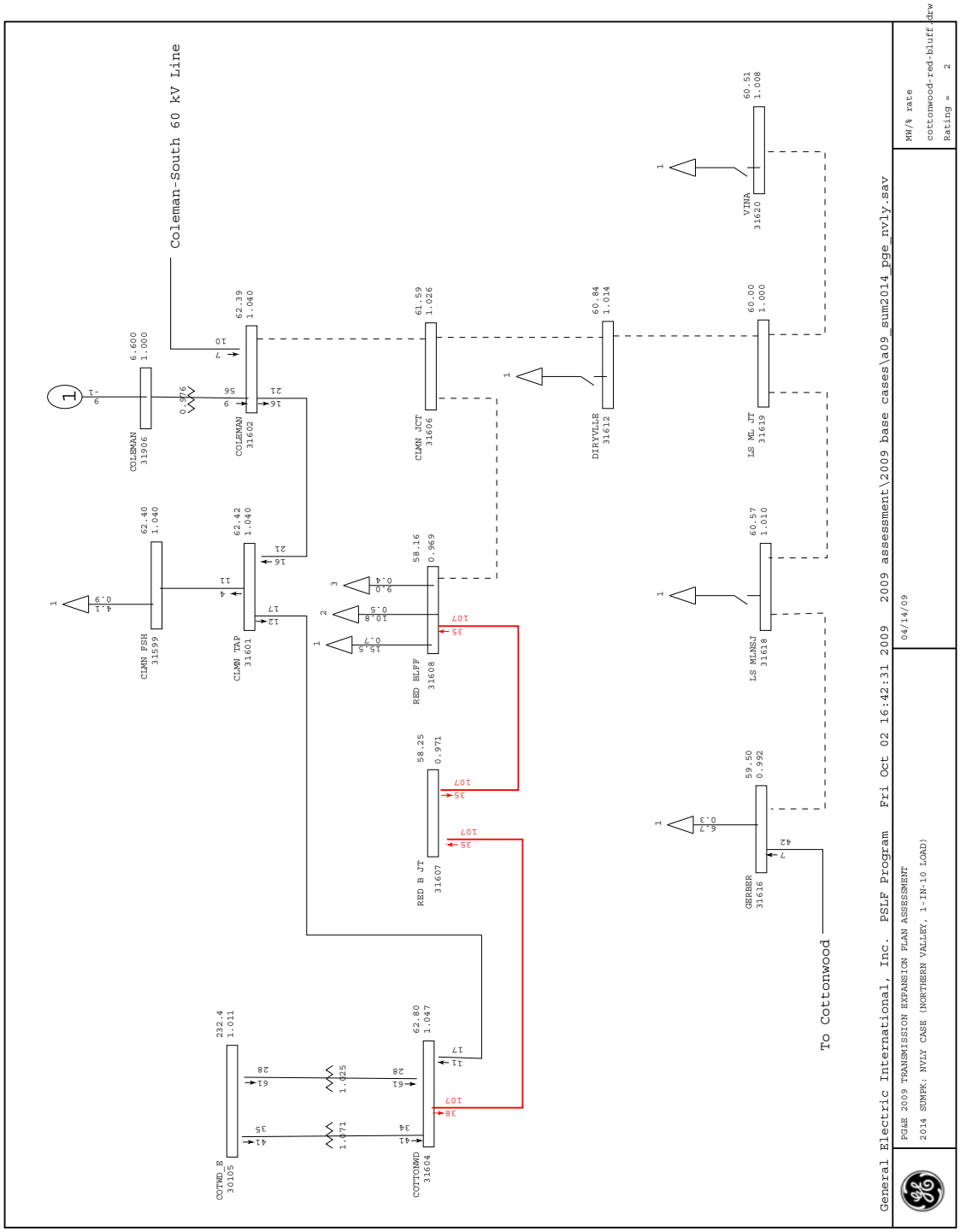

Figure 4-79: Pre-Project – 2014 Loss of Coleman – Red Bluff 60 kV Line (L-1)

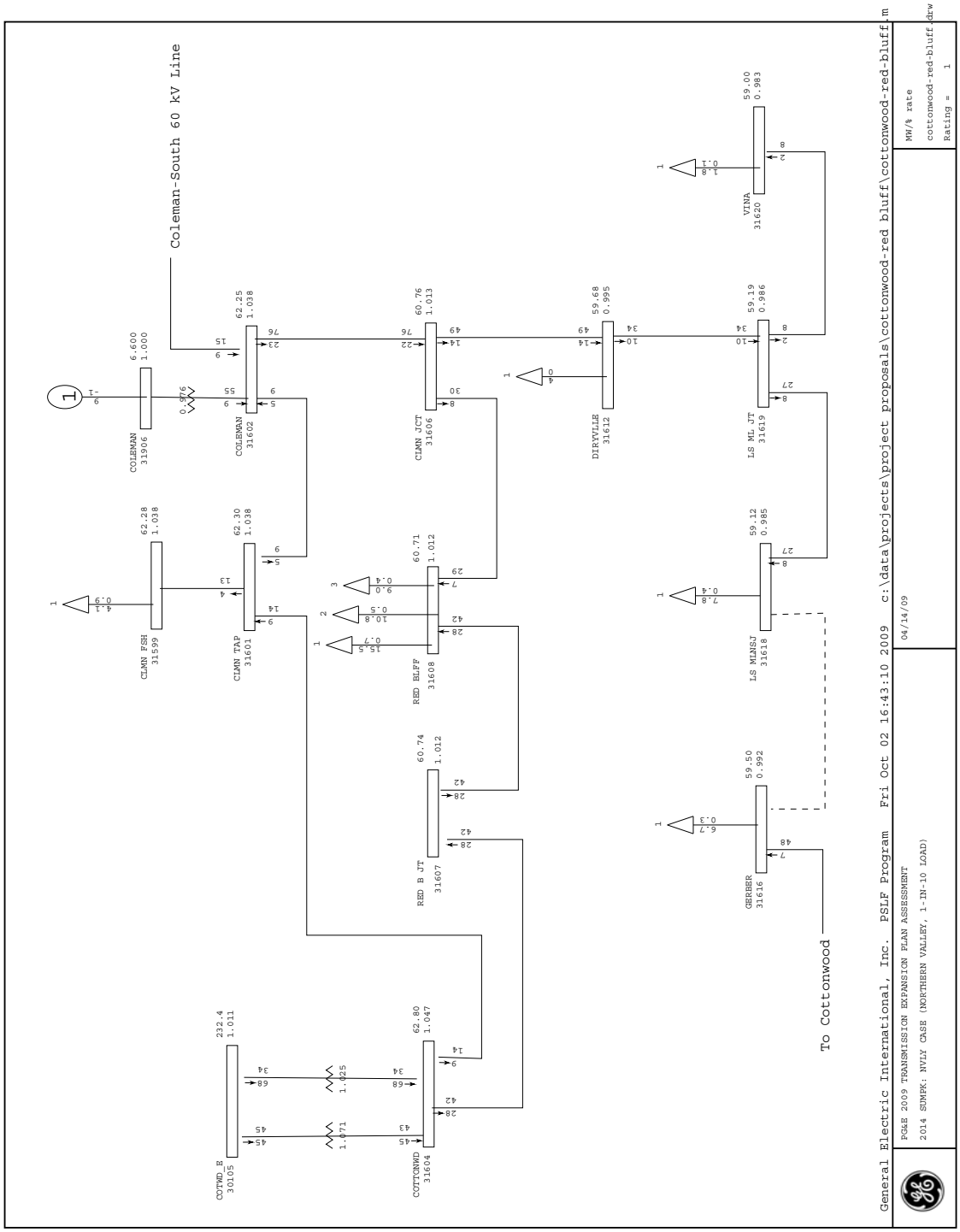

Figure 4-80: Post-Project – 2014 Normal Conditions

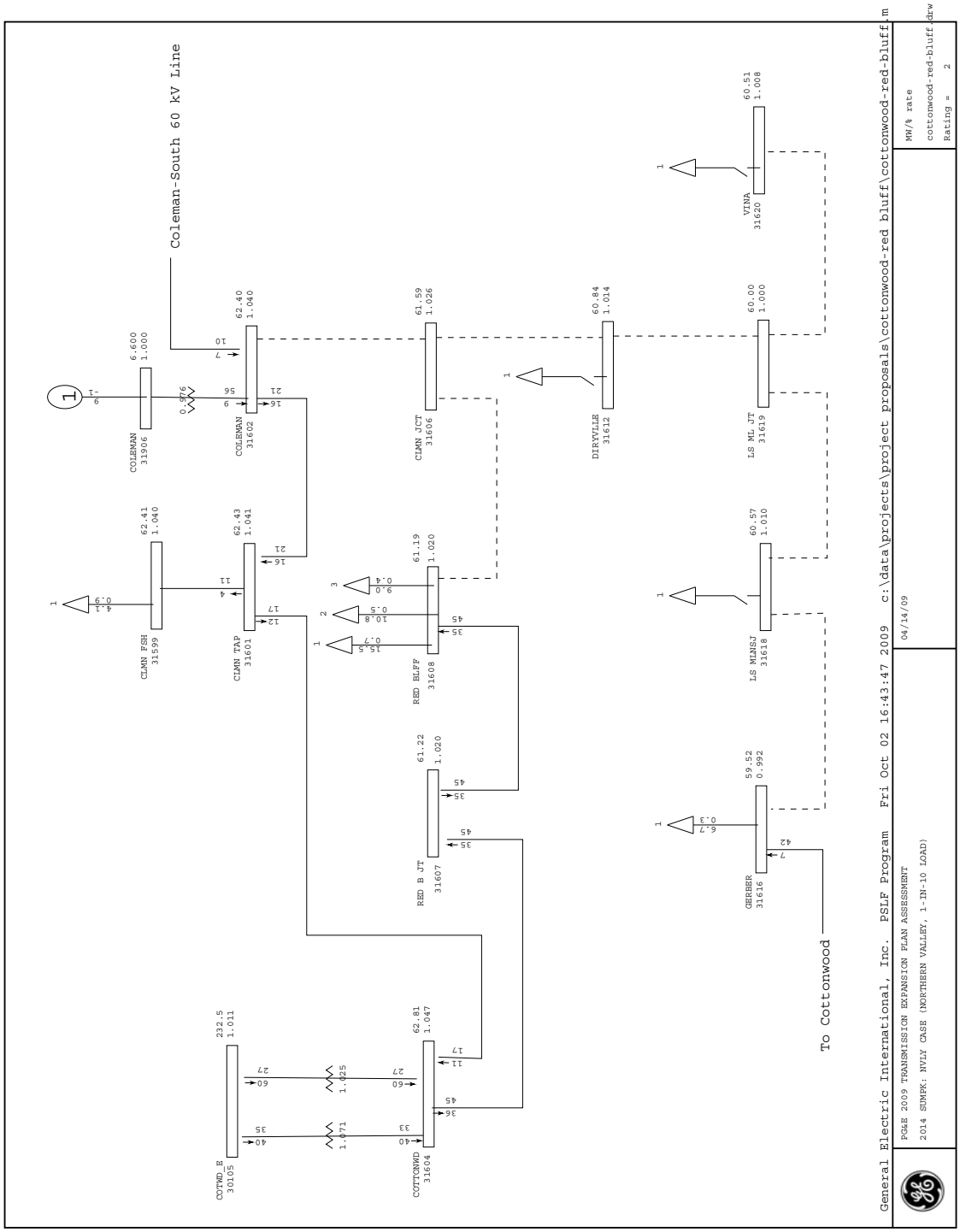

Figure 4-81: Post-Project – 2014 Loss of Coleman – Red Bluff 60 kV Line (L-1)

Mountain View/Whisman–Monta Vista Reconductoring

TARGETED IN-SERVICE DATE

May 2014

PURPOSE AND BENEFIT

Reliability – NERC Compliance

PROJECT CLASSIFICATION

This is a new project.

DESCRIPTION AND SCOPE OF PROPOSED PROJECT

The project scope is to reconductor both the Whisman-Monta Vista and Mountain View-Monta Vista 115 kV Lines (approximately 6 and 4.8 miles long, respectively) with conductors rated to handle a minimum of 800 Amps under summer normal conditions and a minimum of 1200 Amps under summer emergency conditions.

This project is expected to cost between $10M and $15M.

BACKGROUND

The Mountain View-Monta Vista and Whisman-Monta Vista 115 kV Lines are critical supply lines for the customers located in Santa Clara County, within the city of Mountain View and Sunnyvale. These lines are built on common towers from Monta Vista substation. Both transmission facilities supply power to approximately 41,000 customers.

In the past, Mountain View and Whisman substations were supplied from two substations, which were Ames and Monta Vista 115 kV Substations. As load increased, the flow from Monta Vista to Ames 115 kV substation also increased. The continued load growth in the area resulted in overloads due to the through flow between Monta Vista and Ames Substations. A project was initiated to eliminate the overload by eliminating the through flow between both substations. This was accomplished by opening the breakers at Ames 115 kV substation and cross tying the Whisman-Ames and Mountain-View Ames 115 kV Lines to create a new Whisman-Mountain View 115 kV Line. This loop configuration from Monta Vista Substation eliminated the through flow that was causing the overload at the same time maintaining reliability by

establishing a second source for both substations. However, with customer load continuing to increase in the area, planning studies for 2014 show that an outage of either the Whisman-Monta Vista or the Mountain View-Monta Vista 115 kV Line could overload the remaining 115 kV Line.

The Whisman-Monta Vista and the Mountain View-Monta Vista115 kV Lines are approximately 6 miles and 4.8 miles long, respectively. Both transmission facilities are composed of 715 AAC conductors and have a four feet-per-second (4 fps) wind speed rating of 839 Amps normal and 949 Amps emergency ratings.

Planning studies for 2014 indicates that if both transmission facilities are reconductored with a conductor having an emergency rating of at least 1200 Amps, the lines would no longer experience any thermal overloads caused by an outage of its parallel 115 kV line.

BASE CASE AND STUDY ASSUMPTIONS

PG&E used base cases and assumptions approved in the CAISO Unified Planning Assumptions and Study Plan for the 2009 Transmission Planning Process cycle.

STUDY CRITERIA

CAISO grid planning criteria
NERC Transmission Planning Reliability Standards

OTHER ALTERNATIVES CONSIDERED

Alternative 1: Status Quo

This alternative is not recommended. This alternative does not address the potential overload issue.

PROJECT SCHEDULE

- Environmental and Permitting Processes – TBD
- Design – TBD
- Major Equipment – TBD
- Construction – TBD
- Operation Date – May 2014

KEY ISSUES

- Land-Use Restrictions – TBD
- Environmental Concerns – TBD
- Special Metering or Protection – TBD
- Common Mode Exposure Items – TBD
- Interaction with other Projects – TBD

GEPSLF MODELING INFORMATION

```
# This change file will reconductor both the Whisman-Monta Vista and
# Mountain View-Monta Vista 115 kV Lines with 795 ACSS.
# Whisman-Monta Vista 115 kV Line ( 6 miles long with 795 ACSS)
OLDSECDD  35352, 35356, CKT=1, SEC=1, STATUS=1, RPU=0.0058259, XPU=0.035956,+
BPU=0.0025812, MVA1=307.14, MVA2=307.14, MVA3=330.05, MVA4=330.05
# Mountain View-Monta Vista 115 kV Line (4.83 miles long with 795 ACSS)
OLDSECDD  35353, 35356, CKT=1, SEC=1, STATUS=1, RPU=0.0046898, XPU=0.028945,+
BPU=0.0020778, MVA1=307.14, MVA2=307.14, MVA3=330.05, MVA4=330.05
# END
```

MISCELLANEOUS DATA

- PG&E will construct, own, and finance the project
- PG&E will be the planned operator of the project

ATTACHMENTS

1. Scope Diagram
2. Demand Forecast
3. Power Flow Summary
4. Pre and Post Project Power Flow Plots

Attachment 1: Scope Diagrams

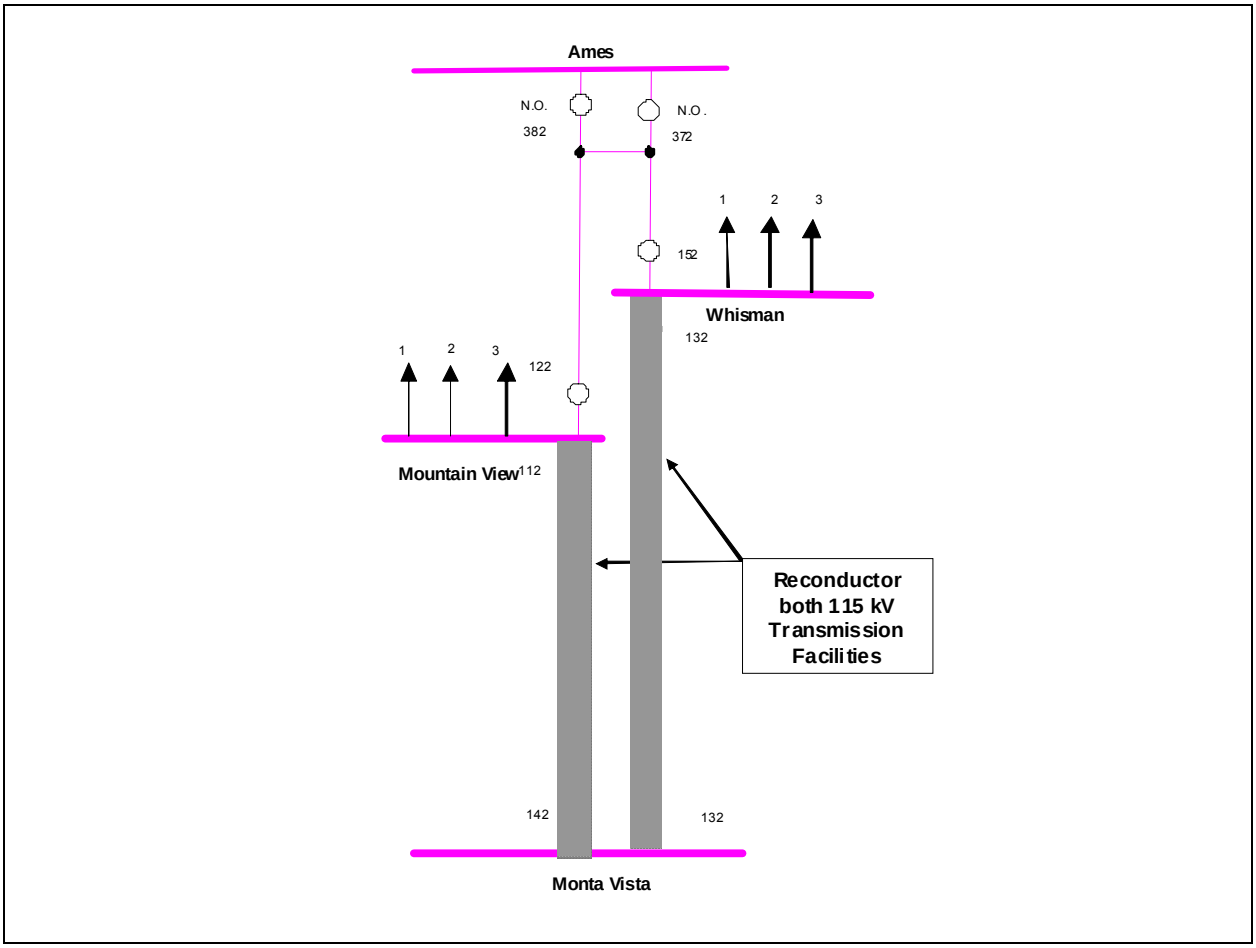

Figure 4-82: Scope Diagram

Attachment 2: Demand Forecast

Table 4-31: De Anza Division Demand Forecast

Area	2010 (MW)	2011 (MW)	2012 (MW)	2013 (MW)	2014 (MW)	Growth Rate (MW/Year)	Growth Rate (%/Year)
De Anza	1000	1028	1057	1066	1075	18.75	1.88

Attachment 3: Power Flow Summary

Table 4-32: Power Flow Summary

Normal/Contingency	Facility Affected	Facility Rating	2014 Pre-Project	2014 Post-Project	2019 Pre-Project	2019 Post-Project
Mountain View-Monta Vista 115 kV Line	Whisman-Monta Vista 115 kV Line	SE Rating 949 Amps	100%	62%	122%	75%
Whisman-Monta Vista 115 kV Line	Mountain View-Monta Vista 115 kV Line	SE Rating 949 Amps	100%	61%	122%	74%

Attachment 4: Pre and Post Project Power Flow Plots

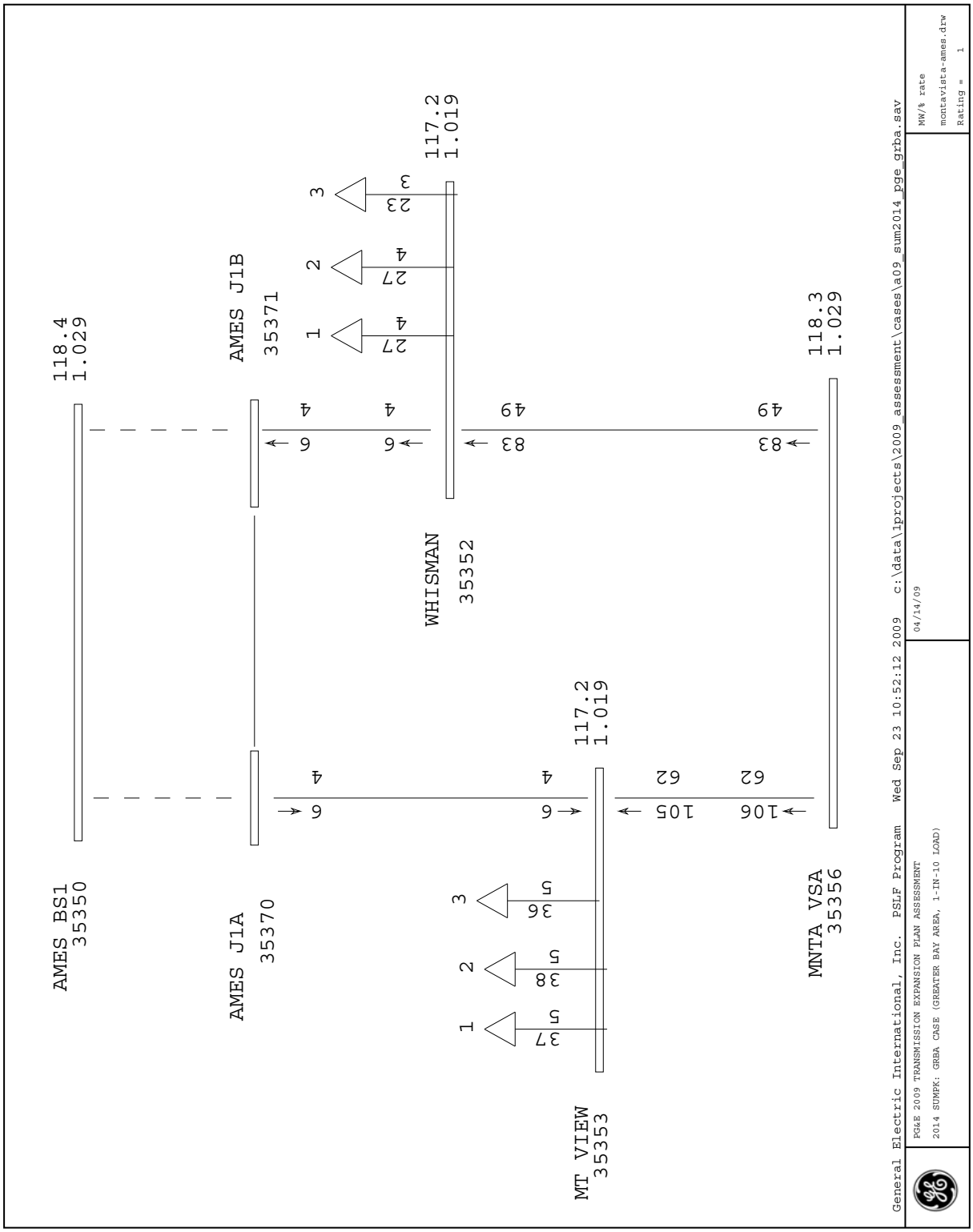

Figure 4-83: All Facilities in service, Year 2014 (Pre-Project)

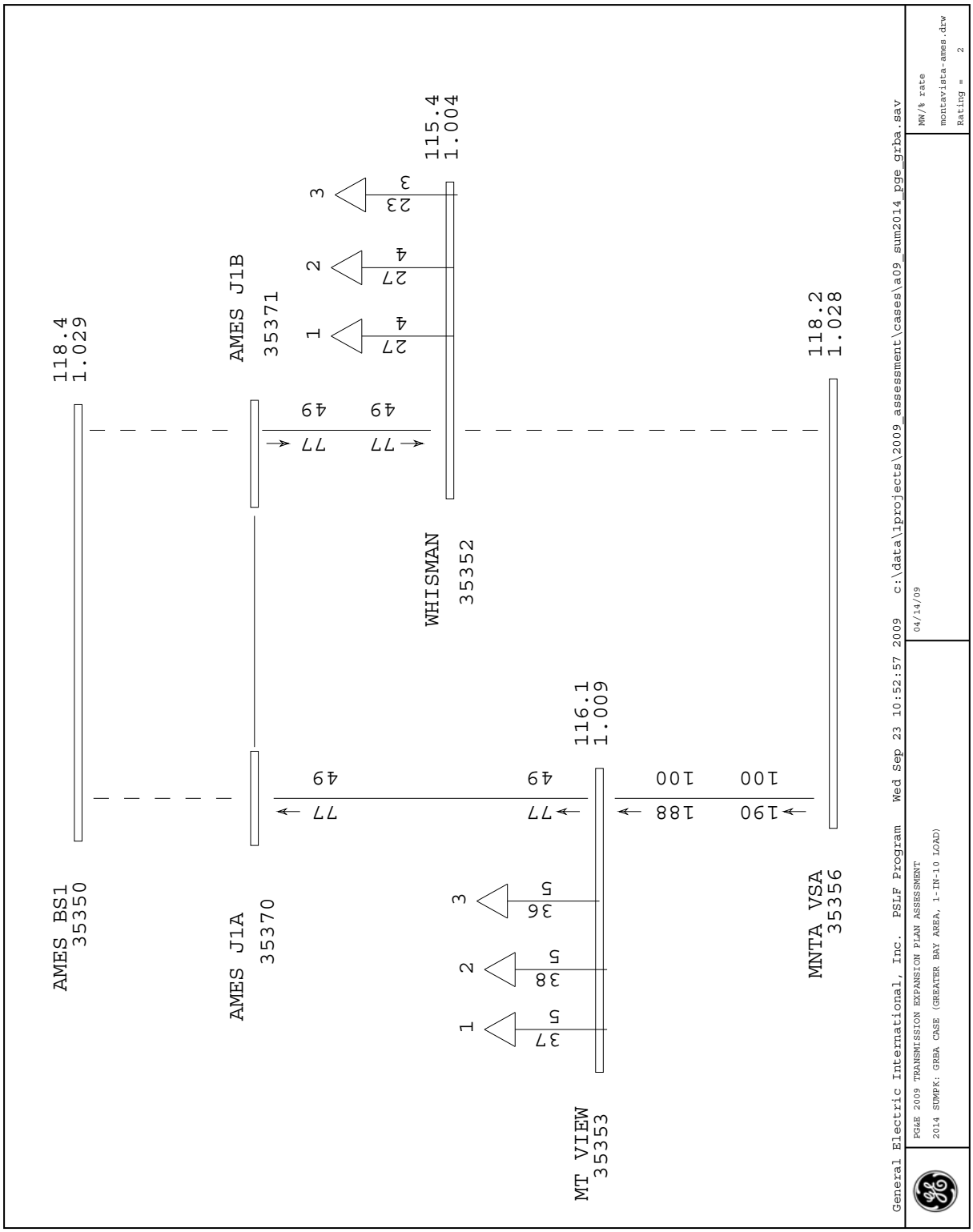

Figure 4-84: Outage Whisman-Monta Vista 115 kV Line, Year 2014 (Pre-Project)

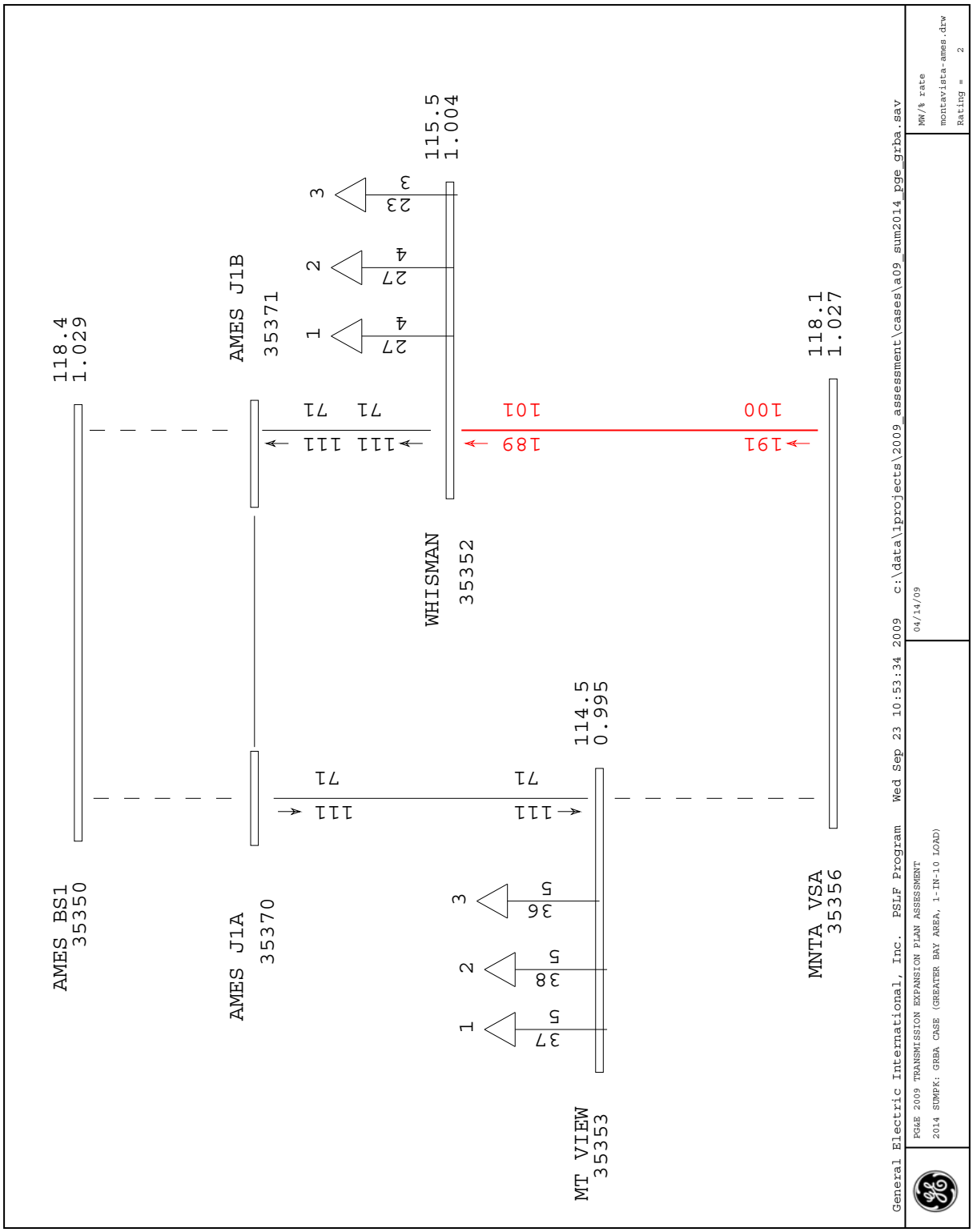

Figure 4-85: Outage of Mountain View-Monta Vista 115 kV Line, Year 2014 (Pre-Project)

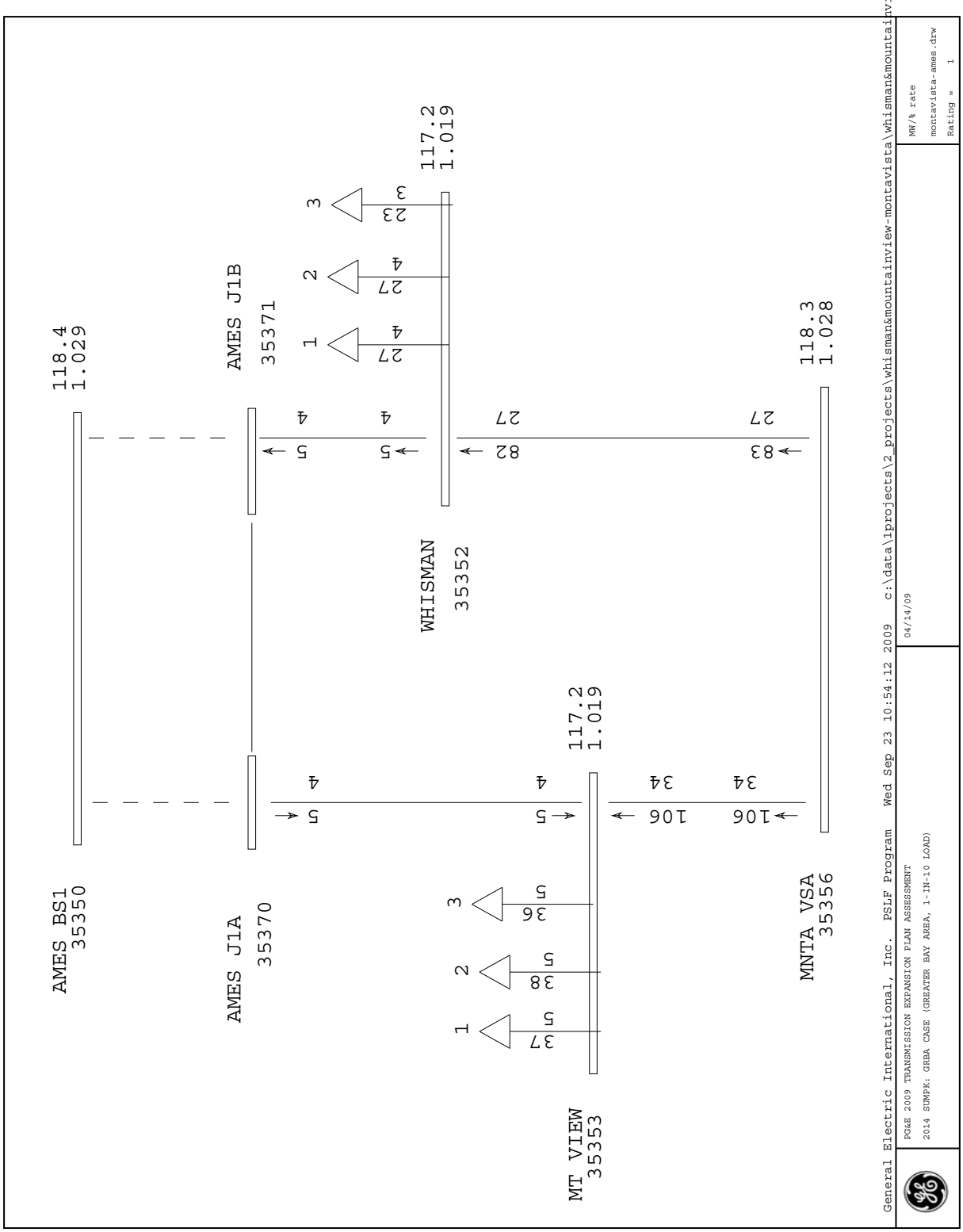

Figure 4-86: All Facilities in service, Year 2014 (Post-Project)

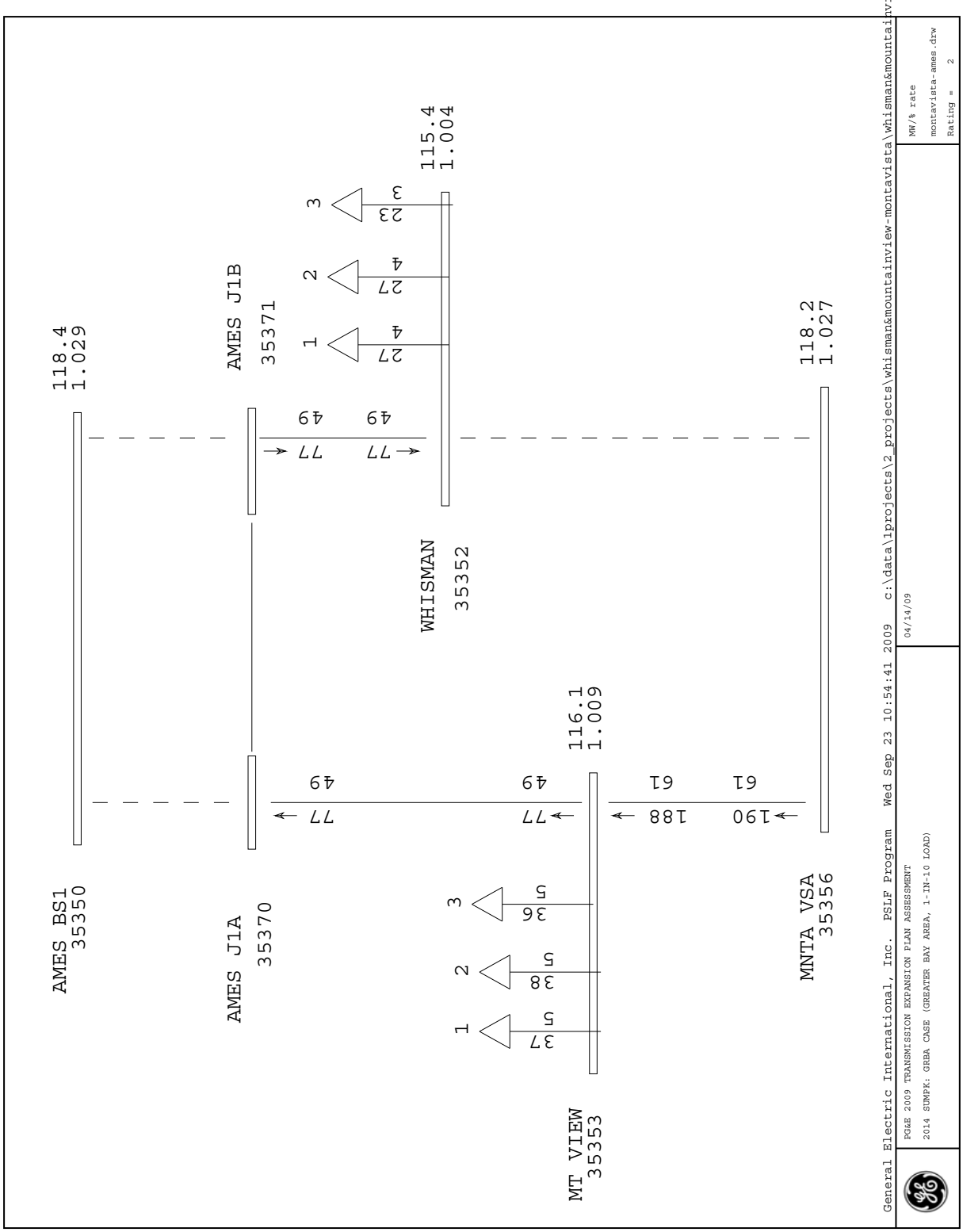

Figure 4-87: Outage of Whisman-Monta Vista 115 kV Line, Year 2014 (Post-Project)

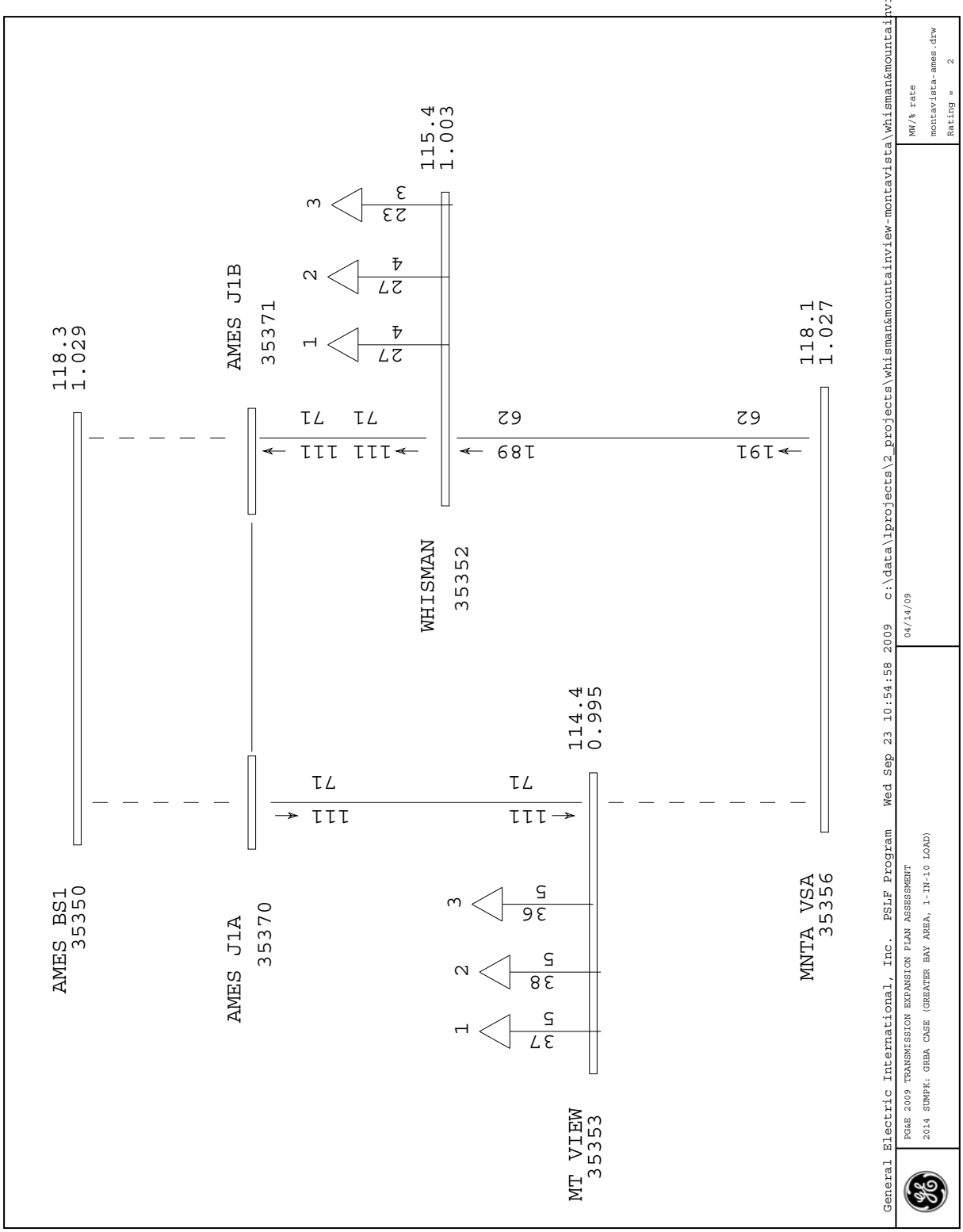

Figure 4-88: Outage of Mountain View-Monta Vista 115 kV Line, Year 2014 (Post-Project)

Reedley-Dinuba 70 kV Line Reconductor

TARGETED IN-SERVICE DATE

May 2014

PURPOSE AND BENEFIT

Reliability – NERC Compliance

PROJECT CLASSIFICATION

This is a new project.

DESCRIPTION AND SCOPE OF PROJECT

This project scope is to reconductor the Reedley-Dinuba 70 kV Line. The project scope includes reconductoring approximately 8 miles of the Reedley-Dinuba 70 kV Line with a conductor rated to handle up to 600 Amps and 700 Amps under summer normal and summer emergency conditions respectively.

This project is expected to cost between $6M and $8M.

BACKGROUND

Dinuba Substation is located in Tulare County and is part of Pacific Gas and Electric's Fresno Division. Dinuba Substation has two 70/12 kV distribution transformers rated for a total capacity of 50 MVA. The local 70 kV loop surrounding Dinuba Substation includes Orosi, Dunlap, Stone Corral, and Sand Creek Substations. The 70 kV loop loaded up to 64 MW in 2008 serving 17,000 customers. The total peak demand for this area is expected to grow at a rate of just over 2.0% per year.

The 70 kV system at Reedley consists of four 70 kV transmission lines in addition to the two 115/70 kV transformer banks: Sanger-Reedley 70 kV Line, Tivy Valley-Reedley 70 kV Line, Reedley-Orosi 70 kV Line, and the Reedley-Dinuba 70 kV Line. One 10 MVA generator is located at Dinuba Energy Center off the Reedley-Dinuba 70 kV Line.

Planning studies have concluded that with the Reedley-Orosi 70 kV Line outage overlapped with Dinuba Energy generation offline, under summer peak load conditions, the Reedley-Dinuba 70 kV Line will be loaded to 109% of its emergency ratings by 2019.

BASE CASE AND STUDY ASSUMPTIONS

PG&E used base cases and assumptions approved in the CAISO Unified Planning Assumptions and Study Plan for the 2009 Transmission Planning Process cycle.

STUDY CRITERIA

CAISO grid planning criteria
NERC Transmission Planning Reliability Standards

OTHER ALTERNATIVE CONSIDERED

Alternative 1: Status Quo

This alternative is not recommended. This alternative does not address load growth and reliability concerns.

PROJECT SCHEDULE

- Environmental and Permitting Processes – TBD
- Design – TBD
- Major Equipment – TBD
- Construction – TBD

KEY ISSUES

- Land-Use Restrictions – TBD
- Environmental Concerns – TBD
- Special Metering or Protection - None
- Common Mode Exposure Items - None
- Interaction with other Projects or Studies – Reedley-Dinuba 70 kV Line Reconductor

GEPSLF MODELING INFORMATION

```
#Reconductors 7.8 miles of 397.5 AAC with 715.5 AAC of the
#Reedley-Dinuba 70 kV Line
#
#Reedley-Dinuba EC Jct Section Reconductor (2.5 miles)
OLDSECDD  34492, 34497, CKT=1, SEC=1,+
        RPU=0.0074287, XPU=0.035893, BPU=0.00074841,+
        MVA1=77, MVA2=90, MVA3=118, MVA4=126
#
#Dinuba EC Jct-Dinuba Section Reconductor (5.3 miles)
OLDSECDD  34497, 34500, CKT=1, SEC=1,+
        RPU=0.0074287, XPU=0.035893, BPU=0.00074841,+
        MVA1=77, MVA2=90, MVA3=118, MVA4=126
```

MISCELLANEOUS DATA

- PG&E will construct, own, and finance the project
- PG&E will be the planned operator of the project

ATTACHMENTS

1. Scope Diagram
2. Demand Forecast
3. Power Flow Summary
4. Pre and Post Project Power Flow Plots

Attachment 1: Scope Diagram

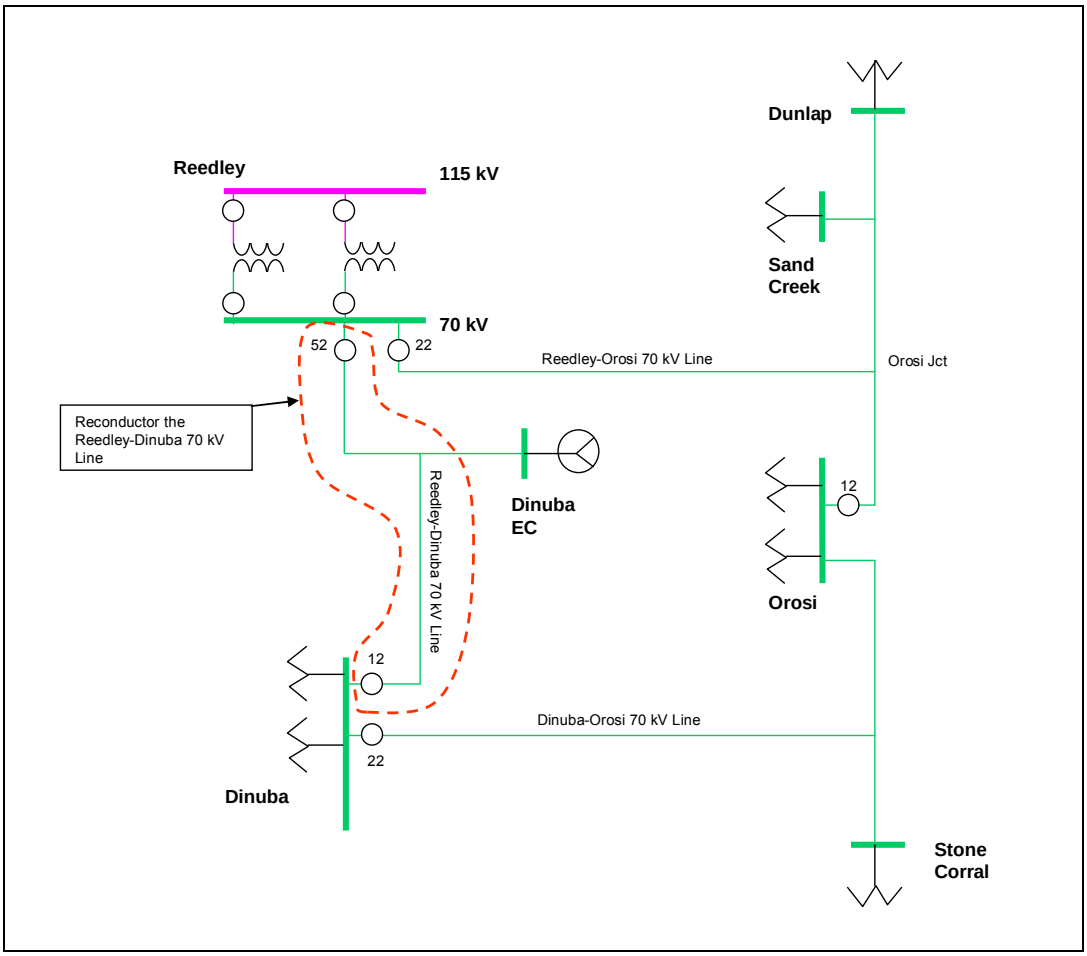

Figure 4-89: Scope Diagram

Attachment 2: Demand Forecast

Table 4-33: Demand Forecast in the Dinuba 70 kV Area

Substation/Bank	2010 (MW)	2011 (MW)	2012 (MW)	2013 (MW)	2014 (MW)	Growth Rate (MW/yr)
Dunlap Bank 1	3.5	3.5	3.6	3.6	3.7	0.1
Sand Creek Bank 1	4.0	4.1	4.2	4.2	4.3	0.1
Stone Corral Bank 2	4.1	4.3	4.4	4.5	4.7	0.1
Stone Corral Bank 3	2.8	2.9	3.0	3.1	3.2	0.1
Dinuba Bank 1	17.9	18.4	18.8	19.2	19.5	0.4
Dinuba Bank 2	12.1	12.4	12.7	12.9	13.2	0.3
Orosi Bank 1	9.0	9.2	9.4	9.6	9.8	0.2
Orosi Bank 2	6.6	6.8	6.9	7.1	7.2	0.1
Total Area Load	60.0	61.5	62.9	64.2	65.4	1.4

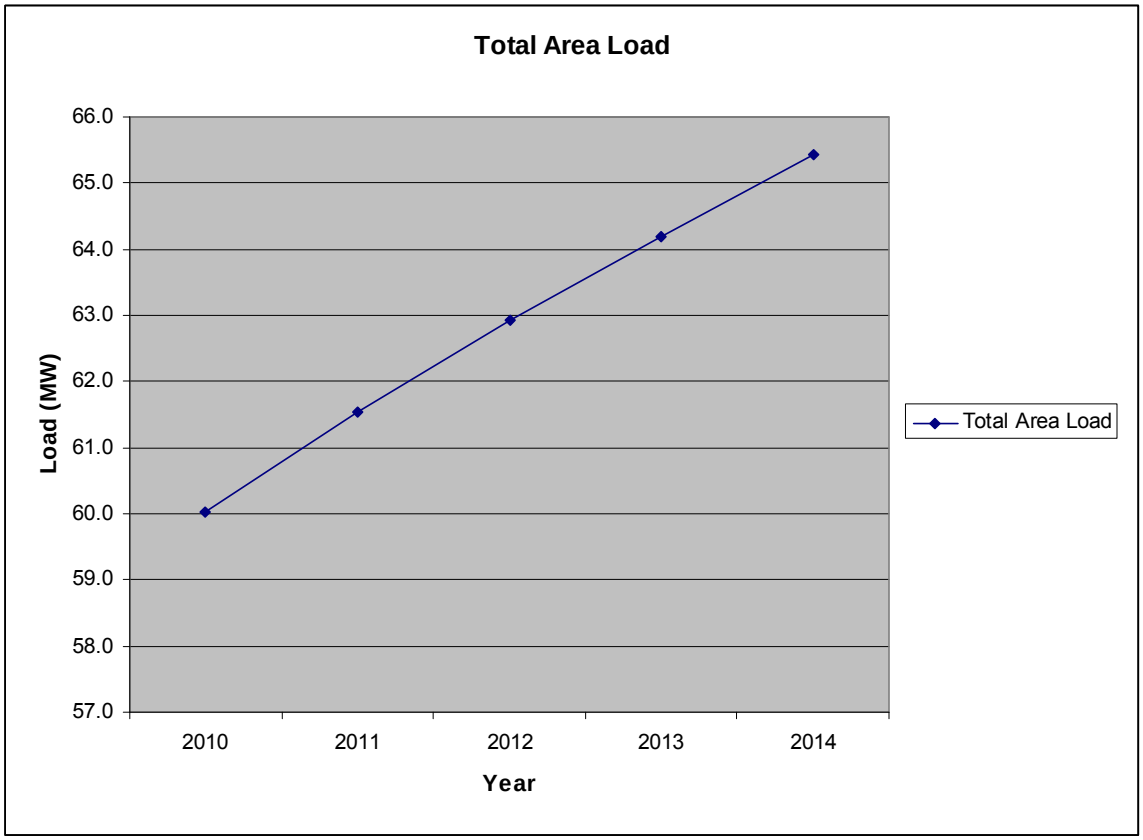

Figure 4-90: Demand Forecast Graph

Attachment 3: Power Flow Summary

Table 4-34: Power Flow Results

			Pre Project						Post Project	
#	Facility	Facility Rating	2010	2011	2012	2013	2014	2019	2019	Contingency
1	Reedley-Dinuba (Dinuba Jct-Dinuba) 70 kV Line	SE Rating 512 Amps	<95%	<95%	<95%	<95%	97%	108%	71%	Reedley-Orosi 70 kV Line (L-1)
2	Reedley-Dinuba (Reedley-Dinuba) 70 kV Line	SE Rating 512 Amps	<95%	<95%	<95%	97%	99%	110%	71%	Reedley-Orosi 70 kV Line overlapped with Dinuba Energy (L-1/G-1)

Attachment 4: Pre and Post Project Power Flow Plots

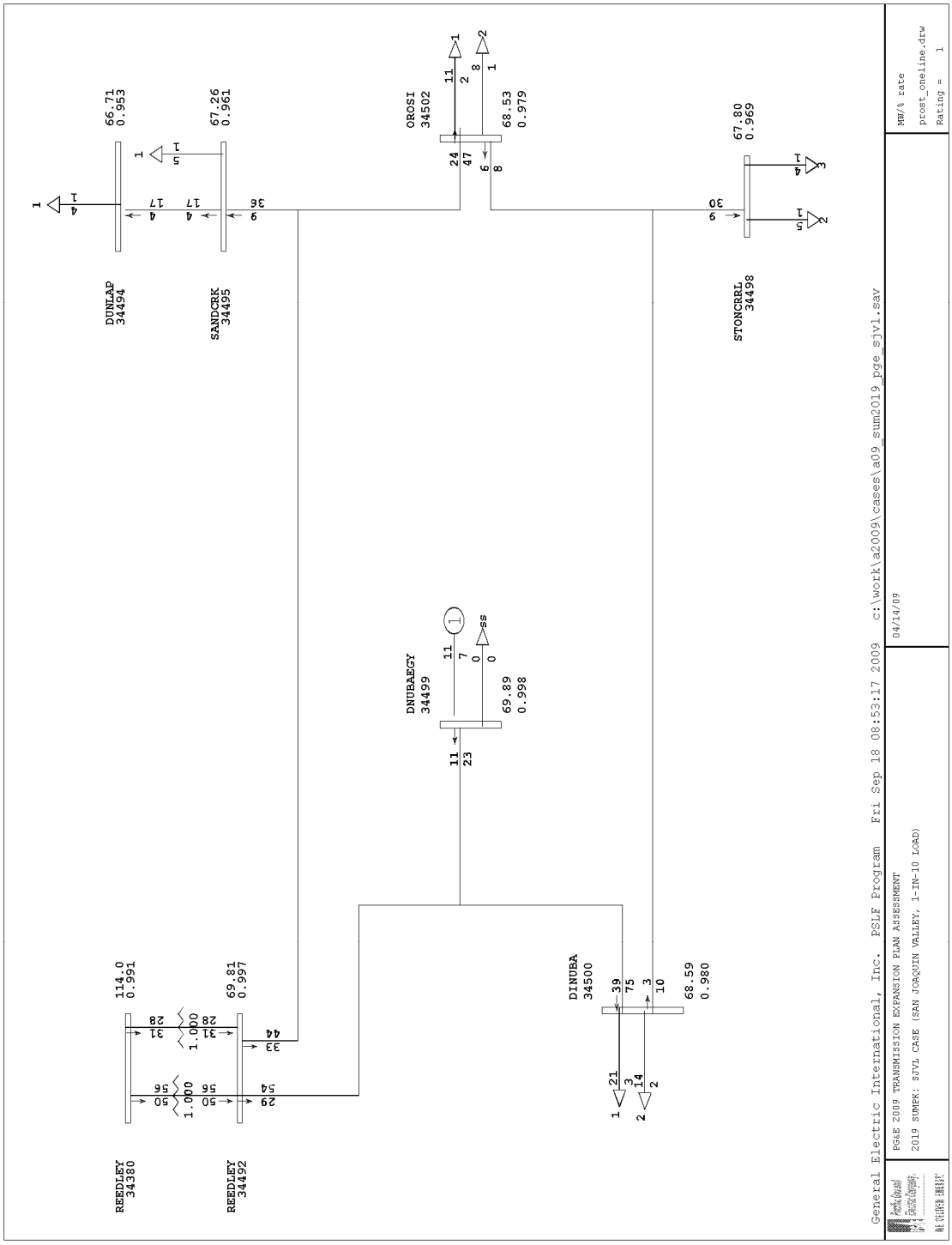

Figure 4-91: Pre Project – Normal Conditions

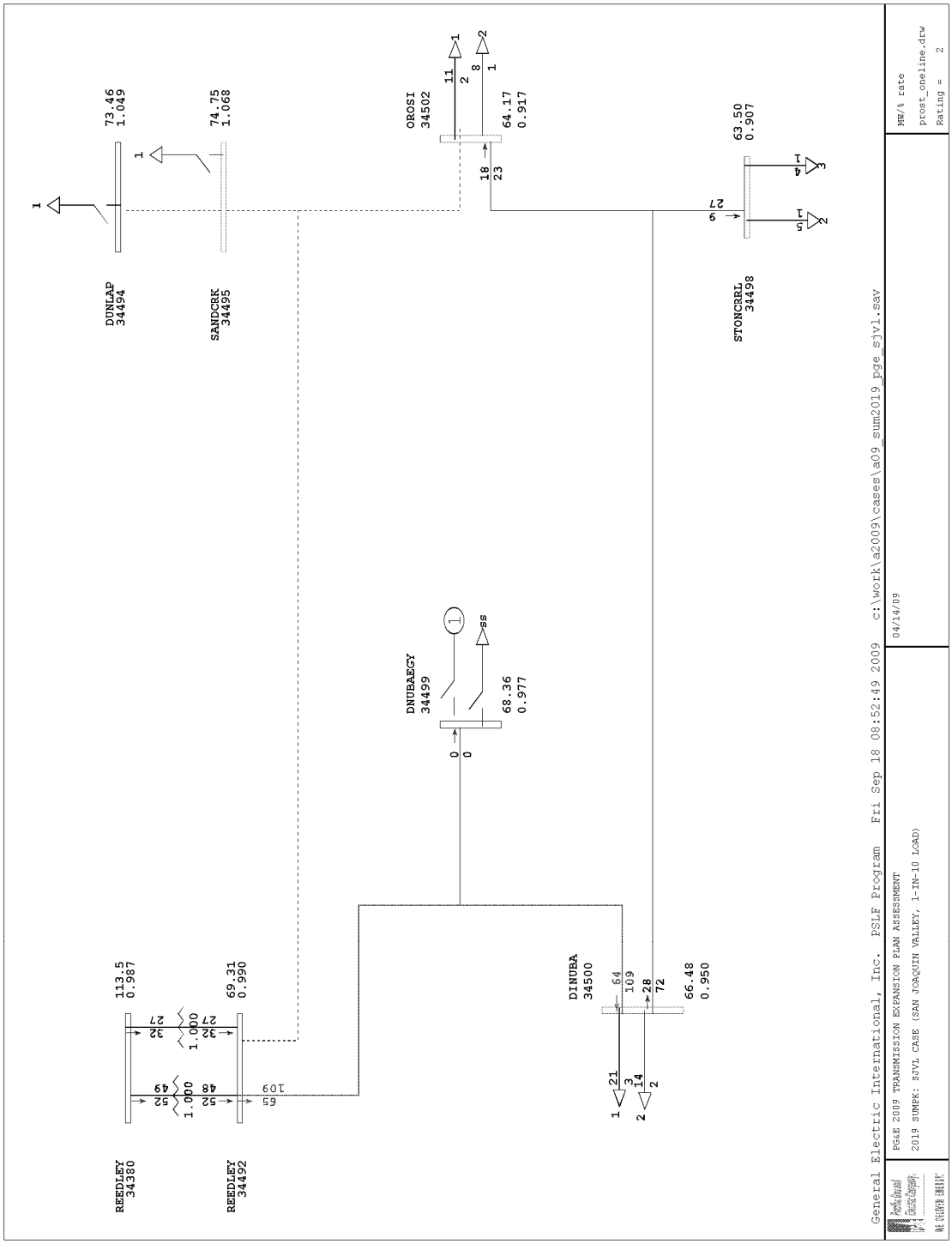

Figure 4-92: Pre Project – Reedley-Orosi 70 kV Line Outage and Dinuba Energy (L-1/G-1)

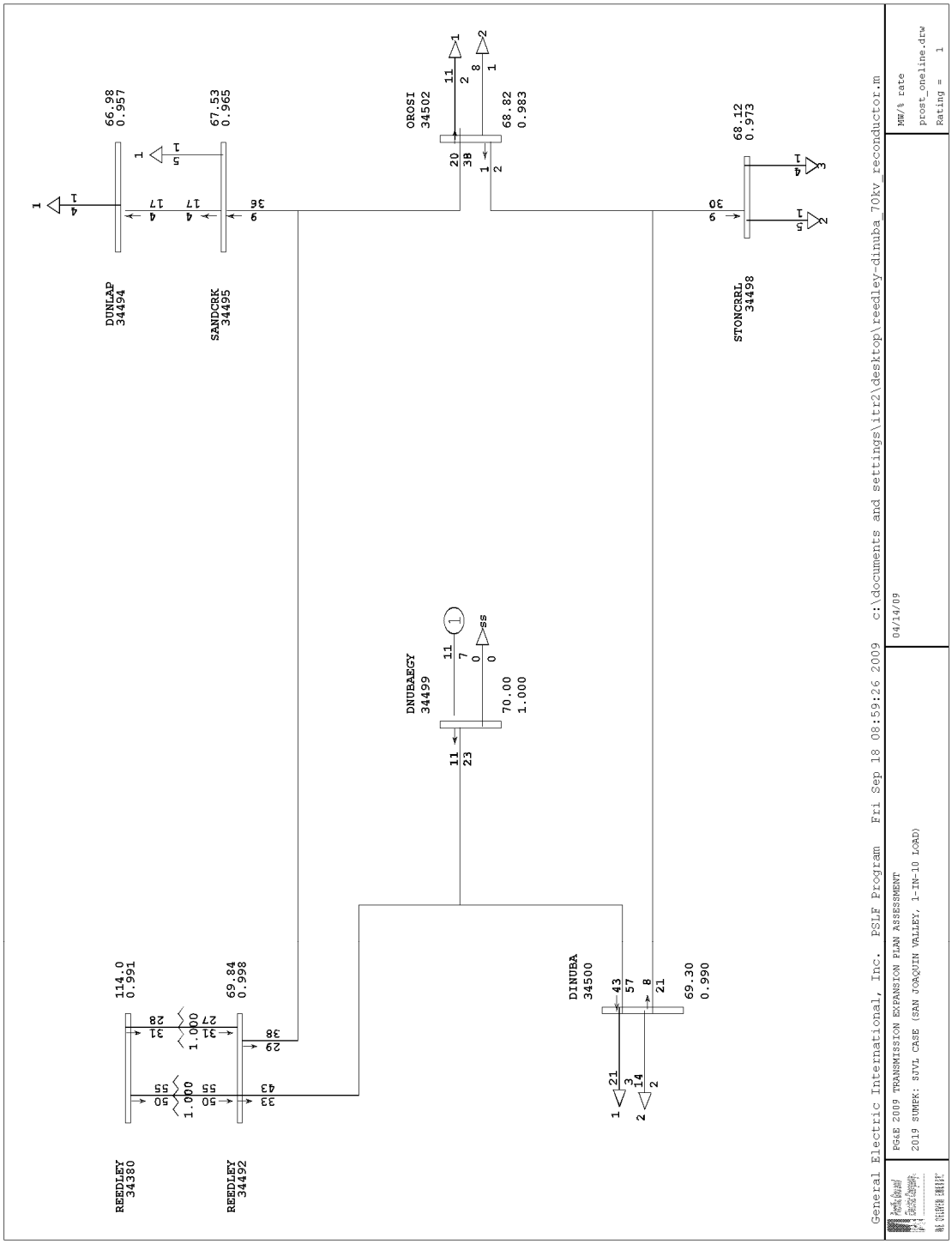

Figure 4-93: Post Project – Normal Conditions

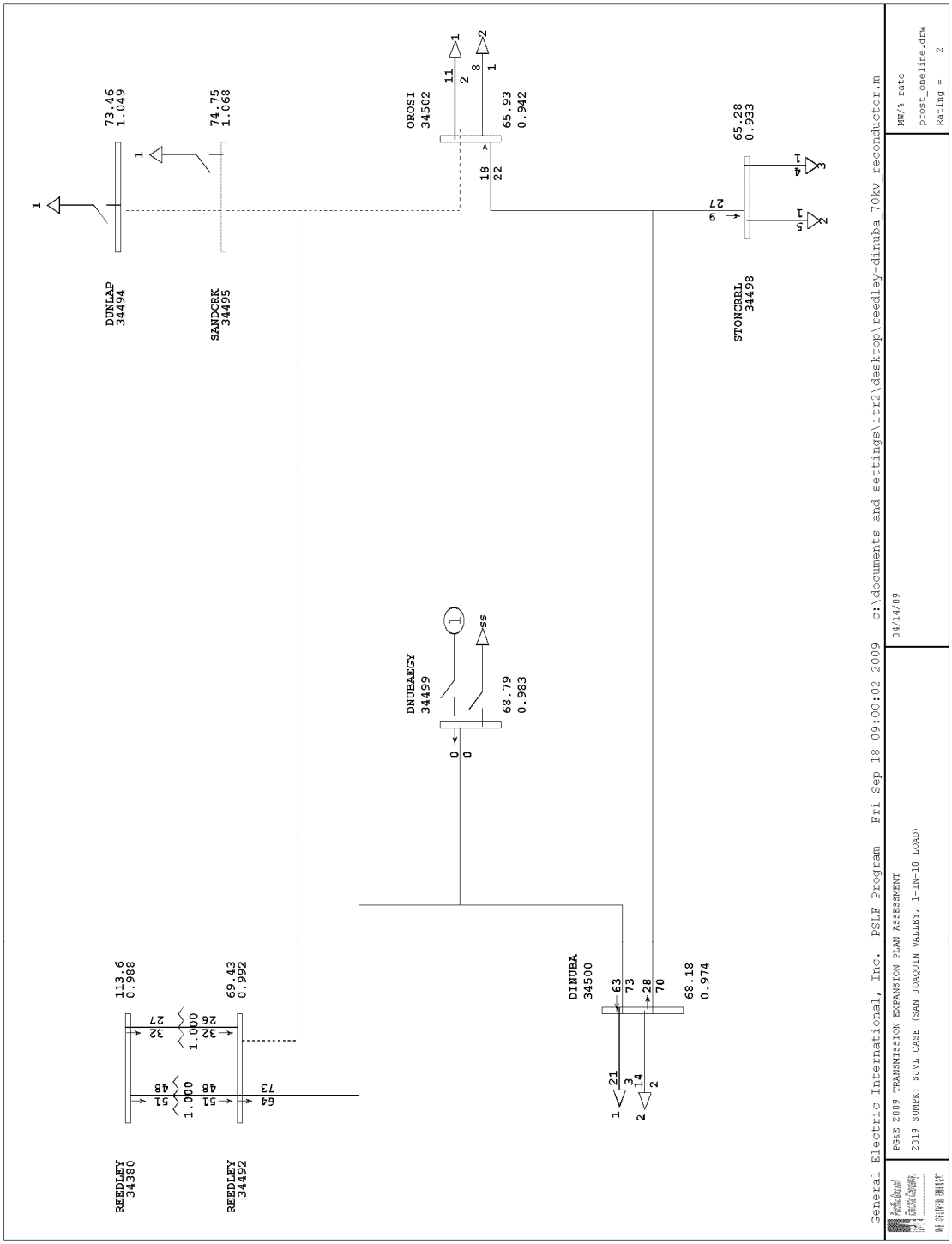

Figure 4-94: Post Project – Reedley-Orosi 70 kV Line Outage and Dinuba Energy (L-1/G-1)

2015

Ashlan-Gregg and Ashlan-Herndon 230 kV Line Reconductor

IN-SERVICE DATE

May 2015

PURPOSE AND BENEFIT

Reliability – NERC compliance

PROJECT CLASSIFICATION

This is a new project

DESCRIPTION AND SCOPE OF PROJECT

The project scope is to reconductor a total of 13.5 miles on the Herndon-Ashlan (6.5 miles) and Gregg-Ashlan (7 miles) 230 kV lines with a conductor rated to handle up to 900 Amps and 1,750 Amps under summer normal and summer emergency conditions, respectively. If necessary, associated line terminal equipment would be upgraded to ensure the required capacity. In addition, the project scope would require obtaining any necessary environmental and land permits to complete the reconductoring work.

This project is expected to cost between $15 million and $20 million.

BACKGROUND

The Herndon-Ashlan and Gregg-Ashlan 230 kV lines are located in Fresno, and each line has a tap to Fig Garden substation. Ashlan is a 230kV distribution substation, so both Ashlan and Fig Garden are fed from the Herndon and Gregg 230 kV systems.

Ashlan 230 kV substation has three 230/12 kV 70 MVA banks, serving a load total of 212 MW in 2008. There is room at Ashlan for a potential fourth distribution bank. Fig Garden substation is tapped from both the Herndon-Ashlan and Gregg-Ashlan 230 kV lines via two 1250 AA-UG underground cables. It has two 230/21 kV 75 MVA banks, serving a load total of 133 MW in 2008. Figarden also expects a third 75 MVA distribution bank to come online in 2009. Fresno load is expected to grow at 48 MW per year.

Both the Herndon-Ashlan and Gregg-Ashlan 230 kV lines are normally rated for 743 Amps, each with an emergency rating of 850 Amps. The Herndon-Ashlan 230 kV line is approximately 6.5 miles long, consisting of both 795 ACSR and 1113 Al. The Gregg-Ashlan 230 kV line is also constructed of 795 ACSR and 1113 Al, and it is about 7 miles long.

Planning analysis determined that loss of either the Gregg-Ashlan or Herndon-Ashlan 230 kV line is projected to overload the remaining line by 4% in 2019. Additionally the loss of the Gregg-Herndon 230 kV Line Nos. 1 and 2 will overload the Gregg-Ashlan 230 kV Line by 91% in 2019.

BASE CASE AND STUDY ASSUMPTIONS

PG&E used base cases and assumptions approved in the CAISO Unified Planning Assumptions and Study Plan for the 2009 Transmission Planning Process cycle.

STUDY CRITERIA

CAISO grid planning criteria
NERC Transmission Planning Reliability Standards

OTHER ALTERNATIVES CONSIDERED

Alternative 1: Status Quo

This alternative is not recommended. This alternative does not address the potential overload issue.

Alternative 2: Convert 115 kV system to 230 kV and loop in Fig Garden Load

This alternative proposes to convert portions of the nearby Herndon-Sanger Number (No.) 1 and No. 2 to 230 kV. Only the distance from Herndon to Ashlan would be converted: approximately 14 miles. This would create another source to Ashlan, and allow Fig Garden to become a looped station, therefore increasing reliability and capacity. However, there would need to be enough room at Ashlan to support two new 230/115 kV banks, and ultimately ten elements total at the substation.

Using unit costs, this alternative is between $30 million and $45 million.

PROJECT SCHEDULE

- Environmental and Permitting Processes – TBD
- Design – TBD
- Major Equipment – TBD
- Construction – TBD

KEY ISSUES

- Land-Use Restrictions – TBD
- Environmental Concerns – TBD
- Special Metering or Protection - None
- Common Mode Exposure Items - None
- Interaction with other Projects or Studies – N/A

GEPSLF MODELING INFORMATION

```
#Gregg-Ashlan & Herndon-Ashlan 230 kV Lines
#Gregg-Figarden Tap Section of the Gregg-Ashlan 230 kV Line
OLDSECDD  30810, 30845, 1, SEC=1,RPU=0.0011719, XPU=0.0062479, BPU=0.01255,+
        MVA1=754, MVA2=754, MVA3=825, MVA4=825
#Figarden Tap-Ashlan Section of the Gregg-Ashlan 230 kV Line
OLDSECDD  30845, 30850, 1, SEC=1,RPU=0.00073927, XPU=0.0039414, BPU=0.0076239,+
        MVA1=754, MVA2=754, MVA3=825, MVA4=825
#Herndon-Figarden Tap Section of the Herndon-Ashlan 230 kV Line
OLDSECDD  30835, 30840, 1, SEC=1,RPU=0.0010049, XPU=0.0053574, BPU=0.010761,+
        MVA1=754, MVA2=754, MVA3=825, MVA4=825
#Figarden Tap-Ashlan Section of the Herndon-Ashlan 230 kV Line
OLDSECDD  30840, 30850, 1, SEC=1,RPU=0.00073927, XPU=0.0039414, BPU=0.0079171,+
        MVA1=754, MVA2=754, MVA3=825, MVA4=825
```

ATTACHMENTS

1. Scope Diagram
2. Demand Forecast
3. Power Flow Summary
4. Pre and Post Project Power Flow Plots

Attachment 1: Scope Diagram

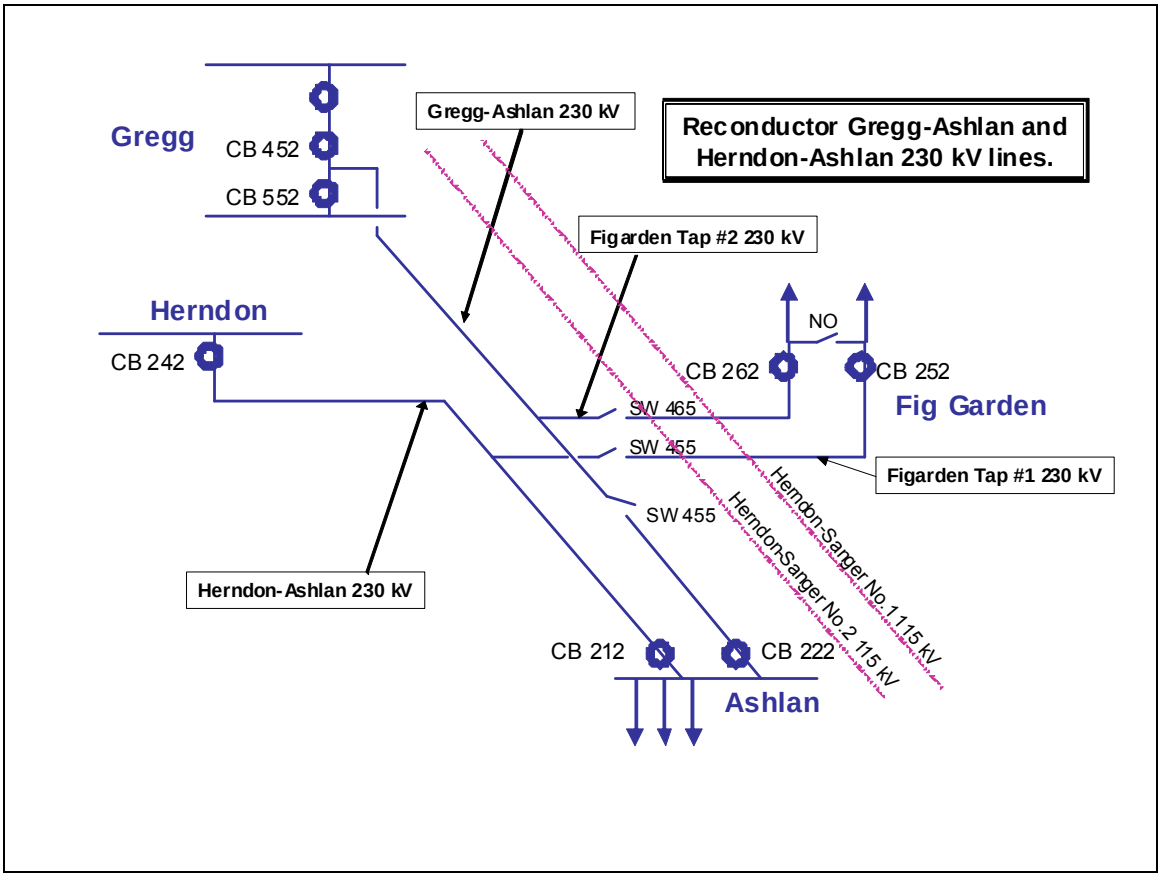

Figure 4-95: Scope Diagram

Attachment 2: Demand Forecast

Table 4-35: Demand Forecast in the Ashlan 230 kV Area

Substation/Bank	2010 (MW)	2011 (MW)	2012 (MW)	2013 (MW)	2014 (MW)	Growth Rate (MW/yr)
Figarden #1	60.5	61.8	63.0	64.0	65.0	1.1
Figarden #2	53.0	54.1	55.2	56.1	57.0	1.0
Figarden #3	36.1	36.8	37.6	38.2	38.8	0.7
Ashlan #1	51.7	52.7	53.5	54.2	54.9	0.8
Ashlan #2	51.7	52.5	53.2	53.8	54.4	0.7
Ashlan #3	47.5	48.3	48.9	49.5	50.1	0.6
Total Area Load	300.5	306.1	311.4	315.8	320.2	4.9

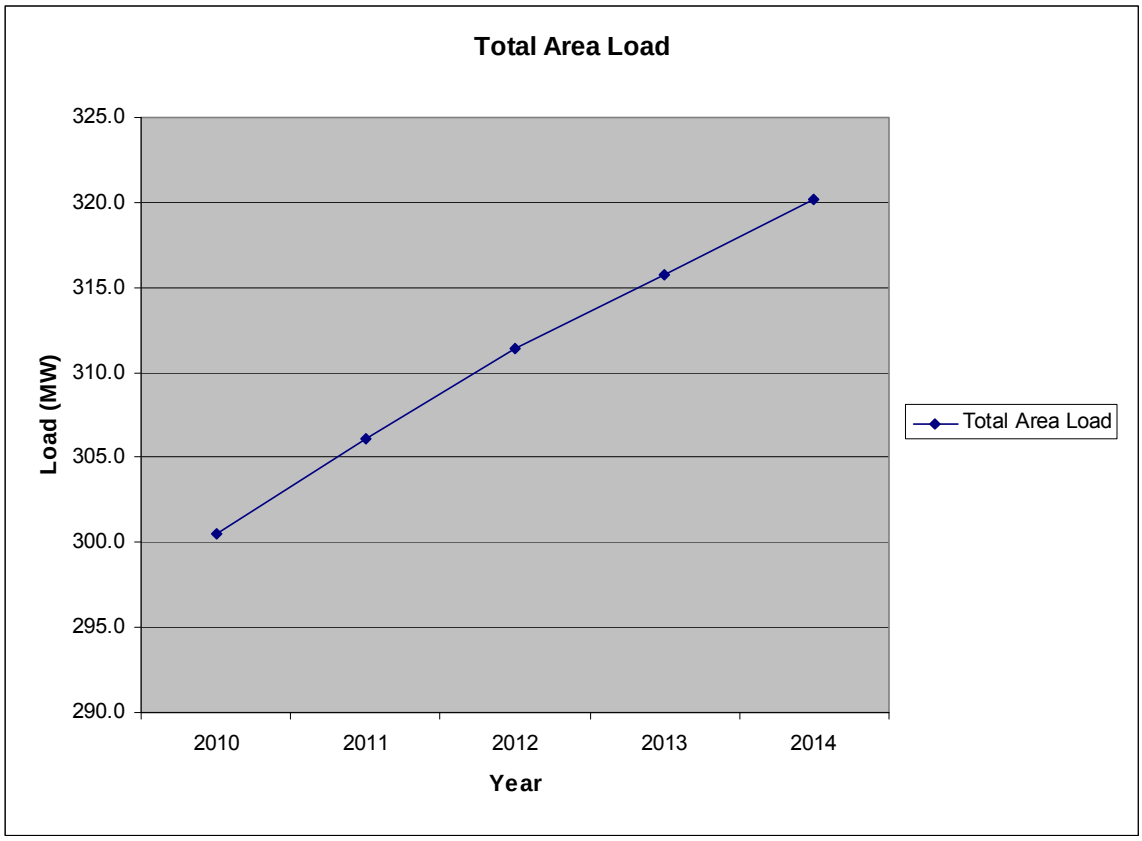

Figure 4-96: Demand Forecast Graph

Attachment 3: Power Flow Summary

Table 4-36: Power Flow Results

			Pre Project						Post Project	
#	Facility	Facility Rating	2010	2011	2012	2013	2014	2019	2019	Contingency
1	Gregg-Ashlan 230 kV Line (Gregg-Figarden Jct section)	SE Rating 850 Amps	<95%	<95%	95%	97%	98%	104%	47%	Herndon-Ashlan 230 kV Line (L-1)
2	Herndon-Ashlan 230 kV Line (Herndon-Figarden Jct)	SE Rating 850 Amps	<95%	<95%	<95%	95%	96%	103%	46%	Gregg-Ashlan 230 kV Line (L-1)
3	Gregg-Ashlan 230 kV Line (Gregg-Figarden Jct section)	SE Rating 850 Amps	173%	174%	176%	178%	180%	191%	86%	Gregg-Herndon 230 kV Line Nos. 1 & 2 (L-2)
4	Gregg-Ashlan 230 kV Line (Figarden Jct-Ashlan)	SE Rating 850 Amps	146%	147%	149%	150%	152%	160%	73%	
5	Herndon-Ashlan 230 kV Line (Figarden Jct-Ashlan)	SE Rating 850 Amps	101%	100%	102%	103%	104%	109%	50%	
6	Herndon-Ashlan 230 kV Line (Herndon-Figarden Jct)	SE Rating 850 Amps	<95%	<95%	<95%	95%	97%	103%	40%	

Attachment 4: Pre and Post Project Power Flow Plots

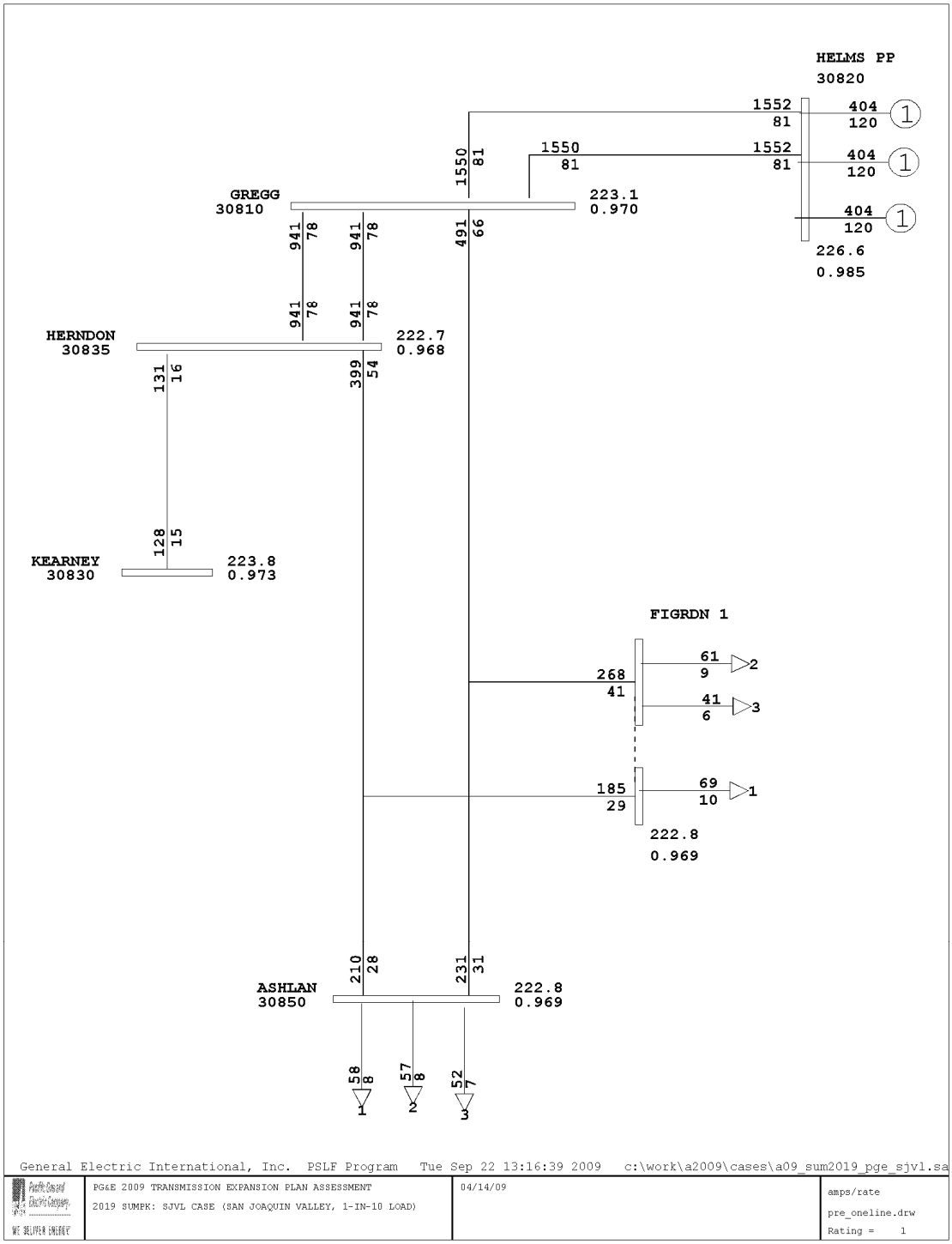

Figure 4-97: Pre Project – Normal Conditions

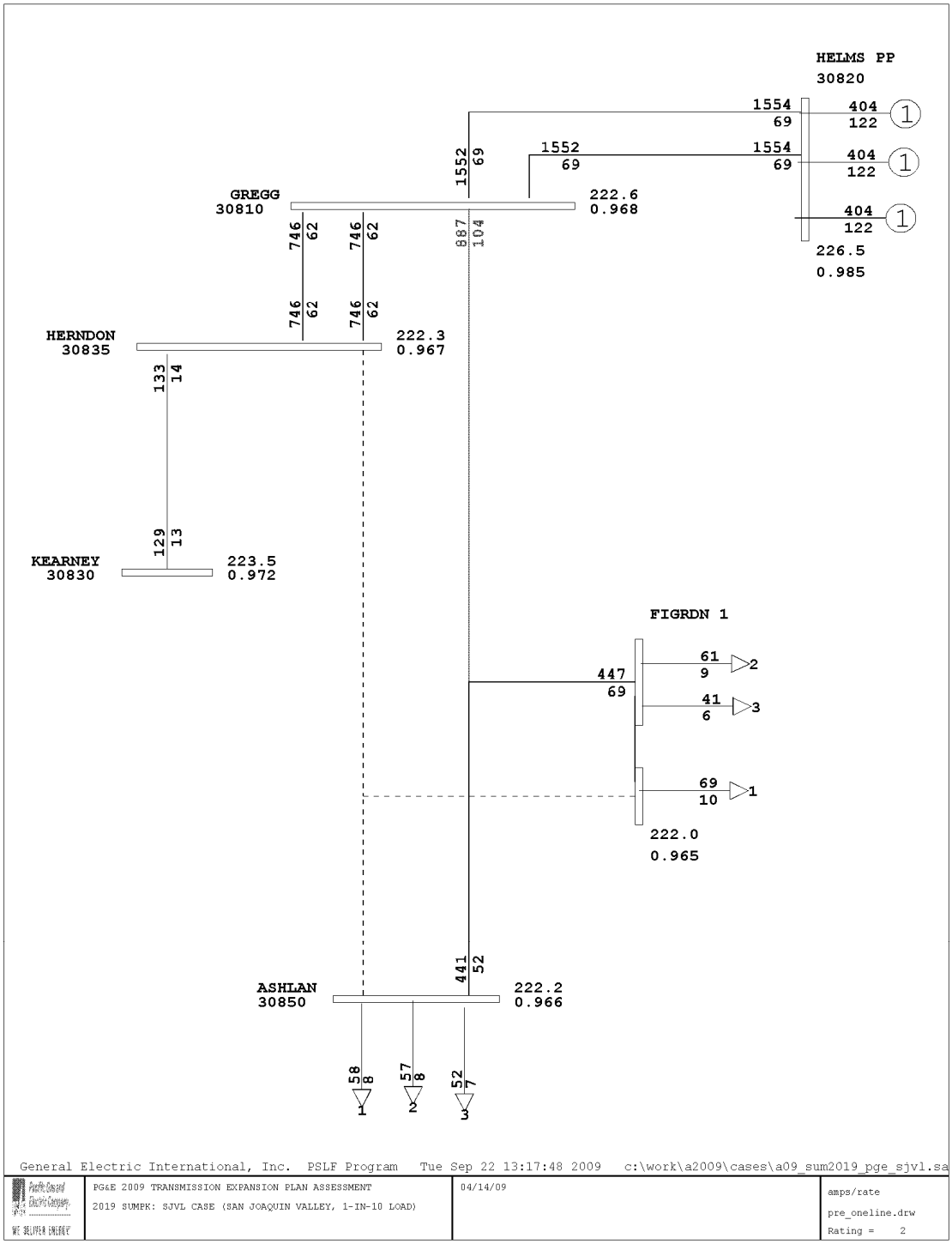

Figure 4-98: Pre Project – Herndon-Ashlan 230 kV Line Outage (L-1)

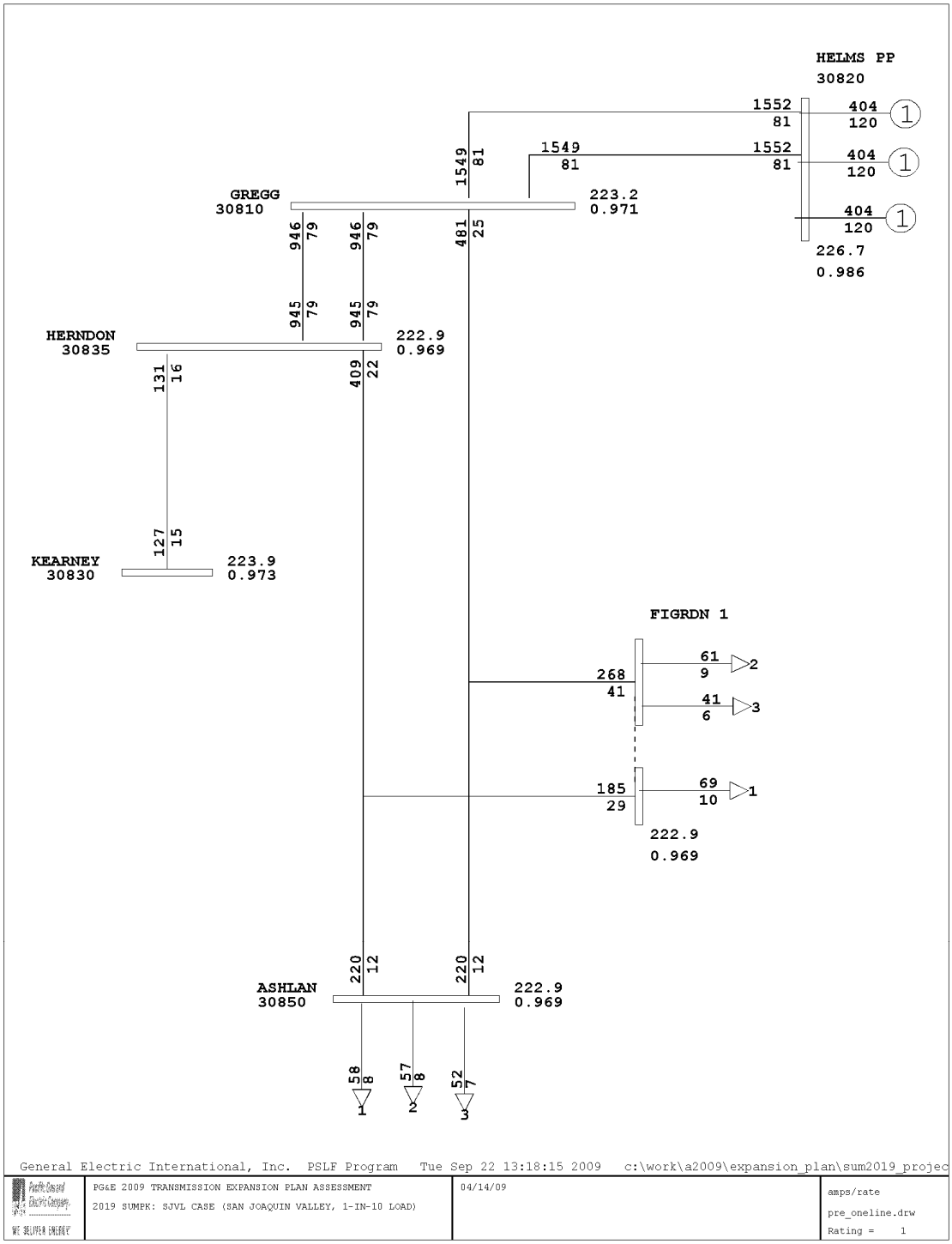

Figure 4-99: Post Project – Normal Conditions

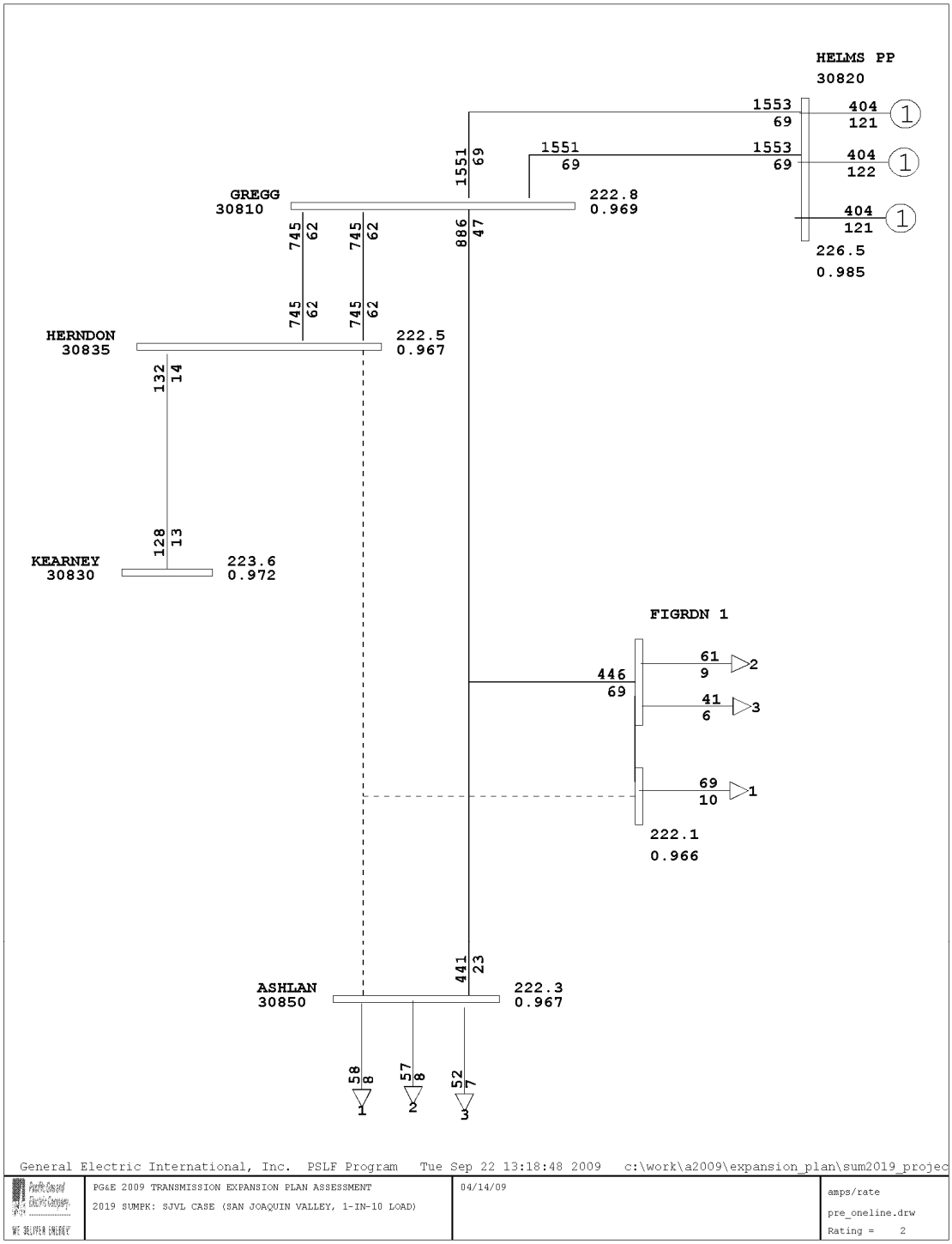

Figure 4-100: Post Project – Herndon-Ashlan 230 kV Line Outage (L-1)

2019

San Francisco 115 kV Series Reactors Project

IN-SERVICE DATE

December 2019

PURPOSE AND BENEFIT

Capacity – The purpose of this project is to increase the load-serving capability for San Francisco.

PROJECT CLASSIFICATION

This project is being submitted for CAISO approval.

DESCRIPTION AND SCOPE OF PROJECT

The project scope includes the following: Install 0.3 ohms series reactors on each HP-1 and HP-3 cables.

At Martin Substation install (6) single phase, dry type, air core reactors, along with disconnect switches on both sides of the reactors on the HP-1 and HP-3 cables. In addition, this project proposes to install a bypass device around the reactors and disconnect switches (circuit breaker), and protective relays.

This project is expected to cost between $5 million and $10 million.

BACKGROUND

Peak electric demand in the City and County of San Francisco (CCSF) is between 970 and 980 MW. Demand growth is expected to be roughly 1% per year. Over 60% of this demand in CCSF is supplied by five substations: Larkin, Mission, Potrero, Hunters Point and Bayshore substations. The remaining demand in the CCSF is served from Embarcadero Substation (approximately 30%) and Martin Substation (approximately 10%).

The Utility has a 115 kV transmission network that delivers power to these five substations. This system is connected to the bulk transmission system at Martin Substation via six 115 kV transmission lines:

- Potrero-Bayshore-Martin (A-H-W) Nos. 1 and 2 Cables
- Martin-Hunters Point (H-P) Nos. 1, 3 and 4 Cables
- Martin-Larkin (H-Y) No. 1 Cable

The majority of power to the 115 kV stations is transmitted over these six "import" cables into CCSF. The remaining power needs for these stations are supplied from Mirant's Potrero Power Plant.

Studies conducted by the CAISO and PG&E over the last three years have shown that the load-serving-capability (LSC) of the transmission system serving San Francisco is limited by the 115 kV import cables. With the completion of the TransBay cable and the re-cabling of the Martin-Bayshore-Potrero 115kV cables, those studies indicate the network is sufficient to satisfy the N-1-1 criteria being applied for the San Francisco 115 kV network, without any generation at Potrero until projected load levels for 2019.

These planning studies indicate that the installation of series reactors on the HP-1 and HP-3 cables will increase load-serving capability (LSC) of the transmission system by approximately 140 MW.

BASE CASE AND STUDY ASSUMPTIONS

PG&E used base cases and assumptions approved in the CAISO Unified Planning Assumptions and Study Plan for the 2009 Transmission Planning Process cycle.

STUDY CRITERIA

CAISO grid planning criteria
NERC Transmission Planning Reliability Standards

OTHER ALTERNATIVES CONSIDERED

Alternative 1: Status Quo

This alternative is not recommended. This alternative does not address the potential reliability concern.

PROJECT SCHEDULE

- Environmental and Permitting Processes – None
- Design – Start design TBD. Complete design TBD
- Major Equipment – (6) single phase, dry type, air core reactors, and a bypass device around the reactors and disconnect switches (circuit breaker), and protective relays. Schedule - TBD
- Construction – Start TBD. Complete construction TBD
- Operation Date – December 2019

KEY ISSUES

- Land-Use Restrictions – None
- Environmental Concerns – None
- Special Metering or Protection – None
- Common Mode Exposure Items – None
- Interaction with other Projects – San Francisco 115 kV Recabling Project

GEPSLF MODELING INFORMATION

```
# Modeling of Flow-Limiting Reactors on 115 kV Lines in SF
# PG&E area only
# Change file models 0.3-ohm reactors (200 MVA rating) on the two critical
# 115 kV cables into SF: Potrero - Hunters Point # 1 & 3
#    Reactors will be installed at Martin Substation.
#
NEWSECDD   33208   33205     1     SEC=2  RPU=.00003  XPU=0.00226843 BPU=0.0000  MVA1=200.
MVA2=200.  MVA3=200.  MVA4=200.   STATUS=1
NEWSECDD   33208   33205     3     SEC=2  RPU=.00003  XPU=0.00226843 BPU=0.0000  MVA1=200.
MVA2=200.  MVA3=200.  MVA4=200.   STATUS=1
```

ATTACHMENTS

1. Scope Diagram
2. Power Flow Summary
3. Pre and Post Project Power Flow Plots

Attachment 1: Scope Diagram

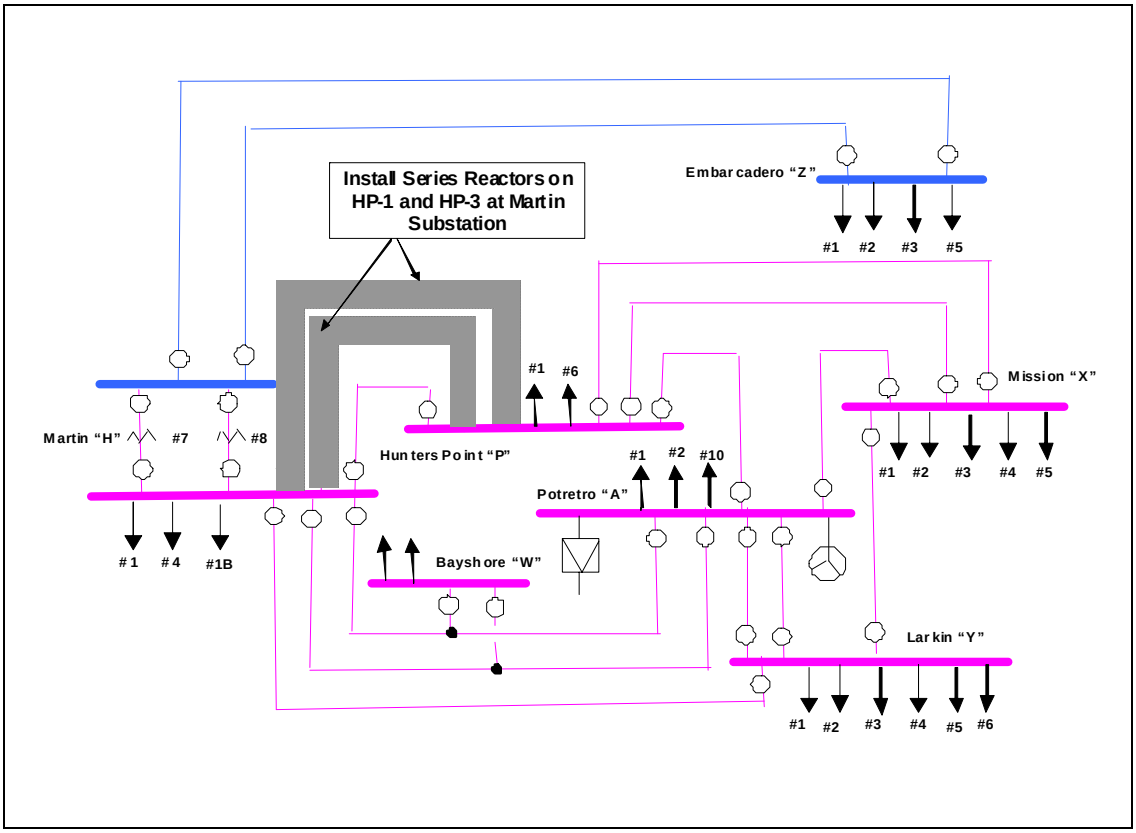

Figure 4-101: Schematic Diagram of the installation of series reactors at Martin Substation

Attachment 2: Power Flow Summary

Table 4-37: Power Flow Summary

Contingency	Facility Affected	Facility Rating (Post Project)	2019 (Pre-Project)	2019 (Post-Project)	2035 (Post-Project)
TBC and AHW-2 out (L-1-1)	AHW-1	SE Rating 1,112 Amps	84%	88%	102%
	HP-1	SE Rating 794 Amps	92%	82%	94%
	HP-3	SE Rating 754 Amps	88%	79%	91%
TBC and HP-3 out (L-1-1)	HP-1	SE Rating 794 Amps	100%	85%	97%
	AHW-1	SE Rating 1,112 Amps	71%	74%	85%
	AHW-2	SE Rating 1,112 Amps	69%	72%	82%

Attachment 3: Pre and Post Project Power Flow Plots

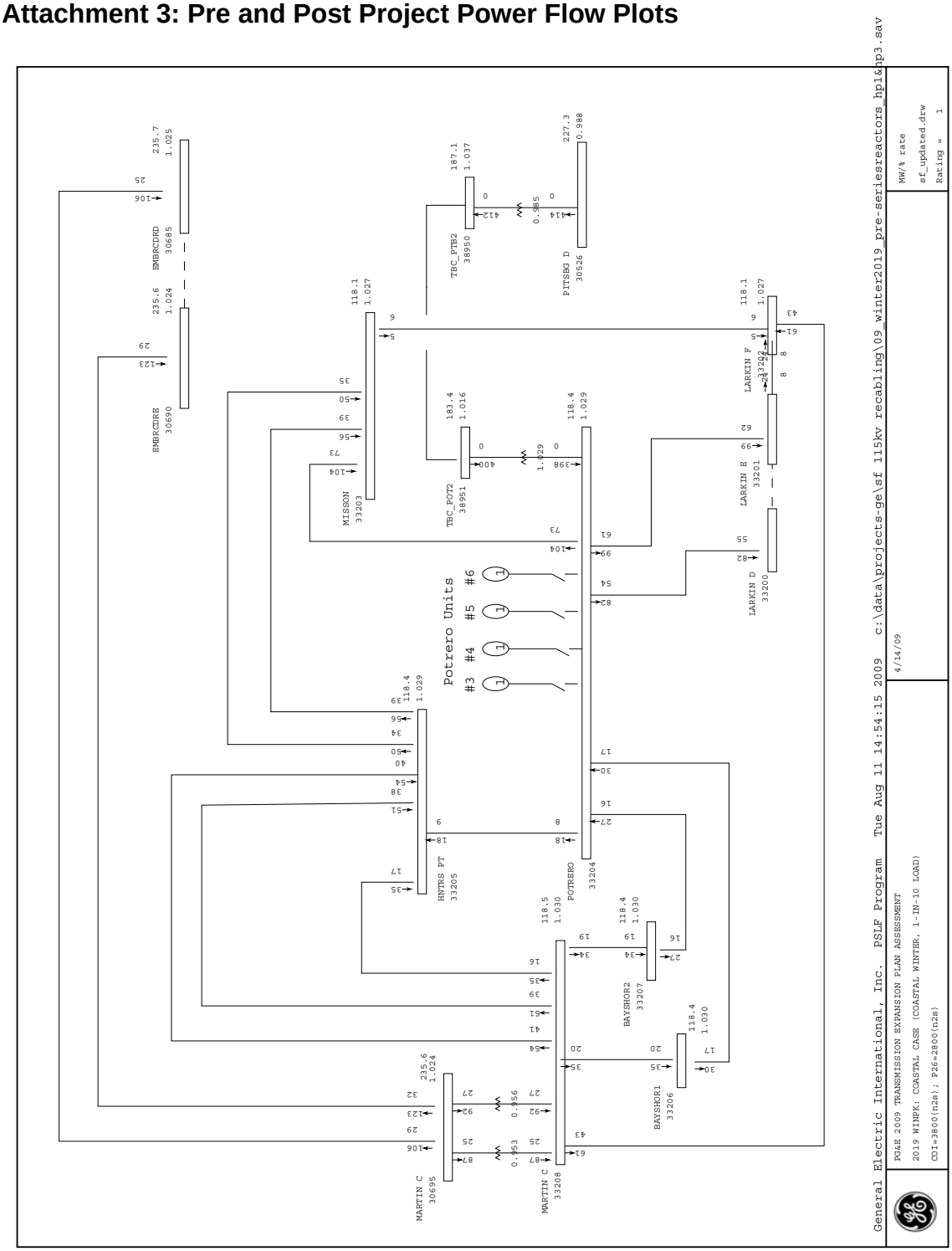

Figure 4-102: All Facilities In-Service, Year 2019 (Pre-Project)

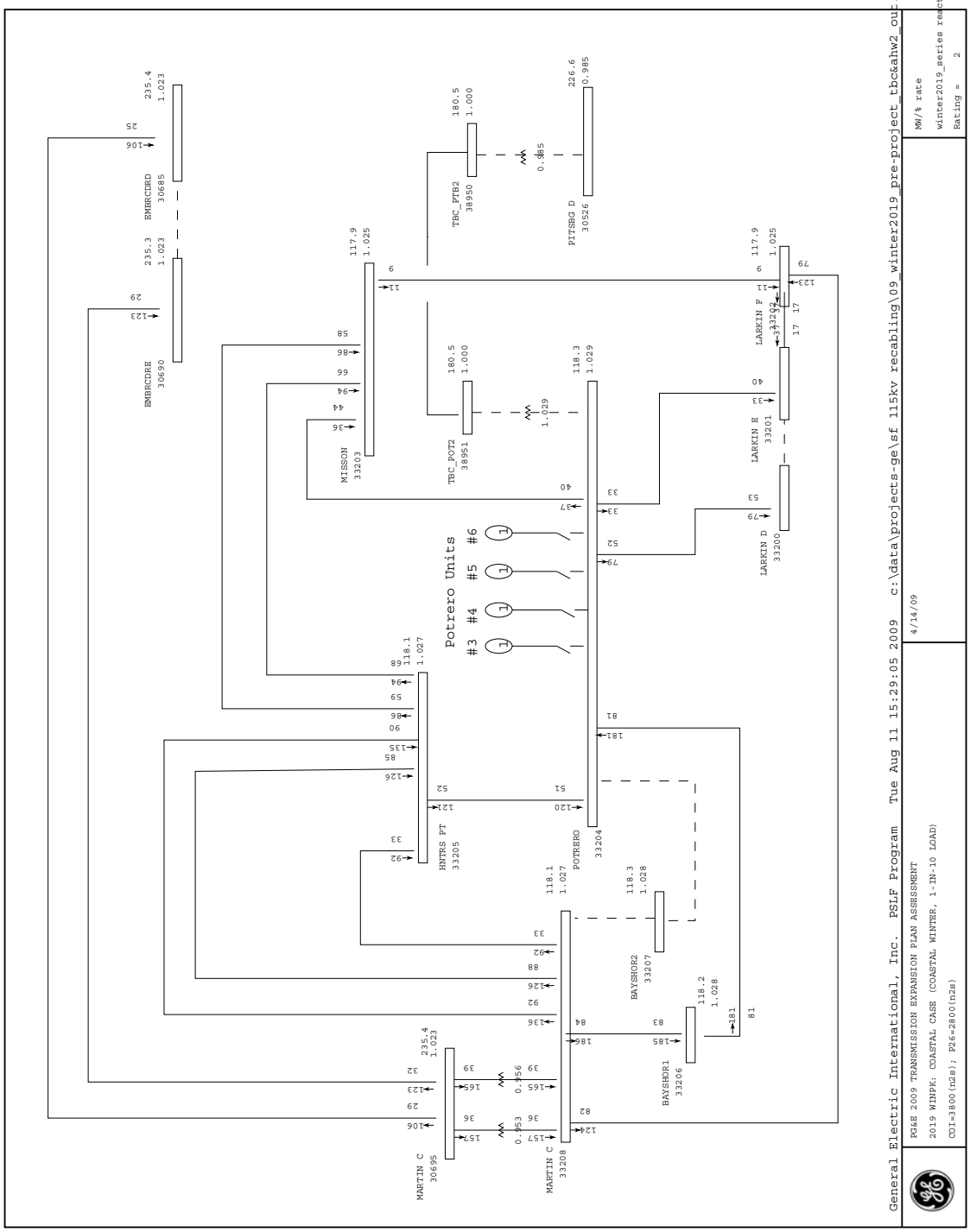

Figure 4-103: Outage of Trans Bay Cable and Martin-Bayshore-Potrero # 2 115 kV Cable (N-1-1), Year 2019 (Pre-Project)

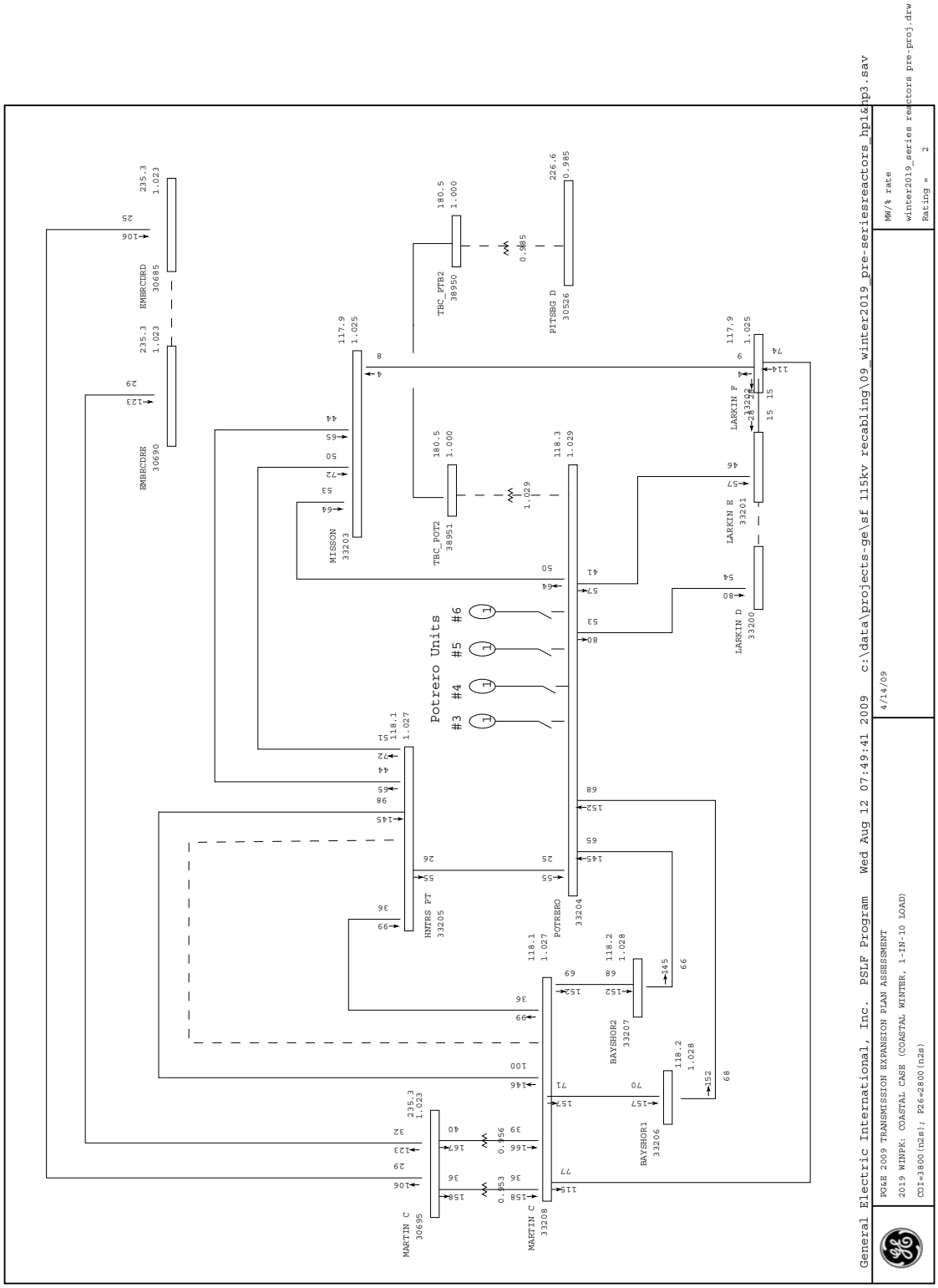

Figure 4-104: Outage of Trans Bay Cable and Martin-Bayshore-Potrero # 3 115 kV Cable (N-1-1), Year 2019 (Pre-Project)

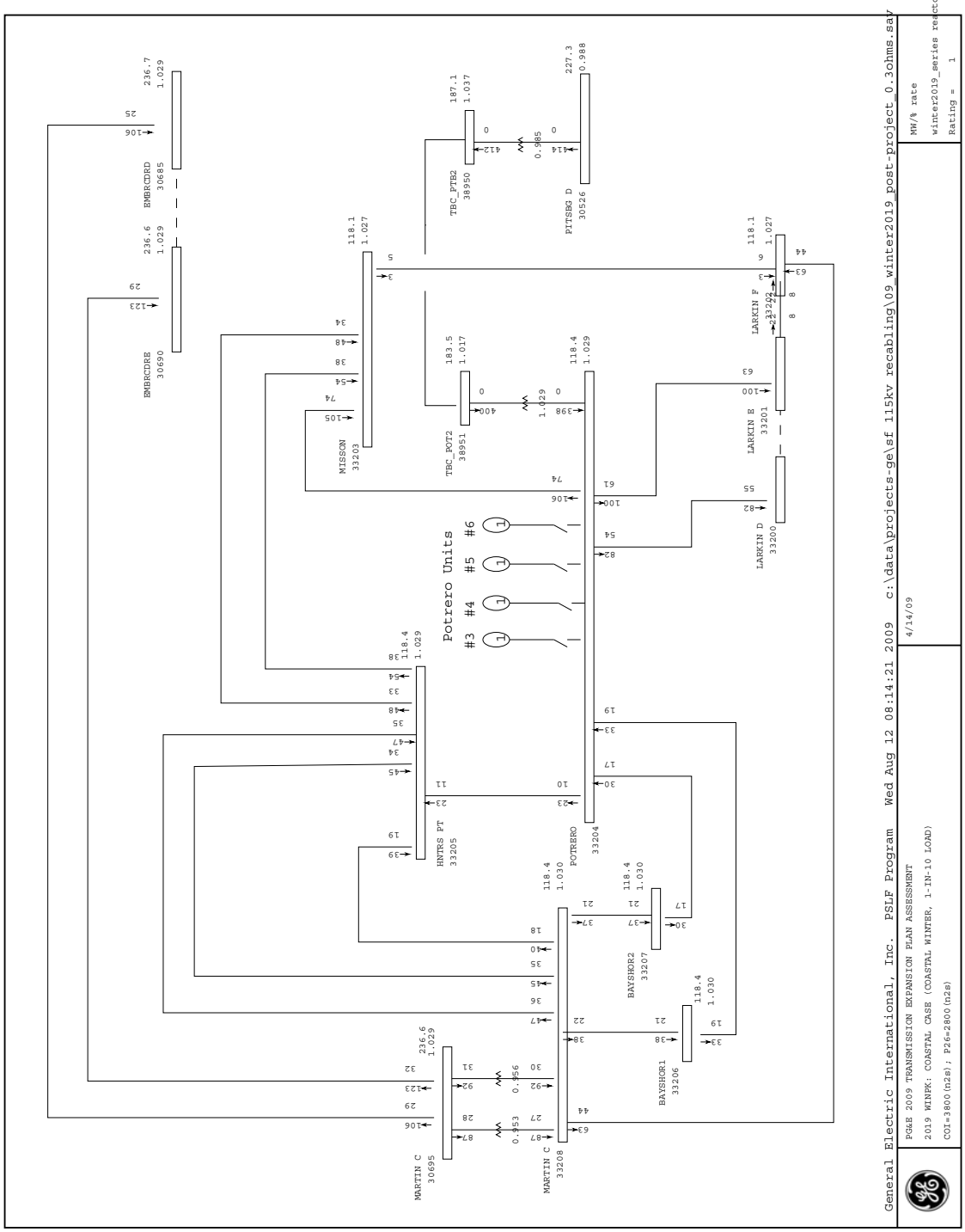

Figure 4-105: All Facilities In-Service, Year 2019 (Post-Project)

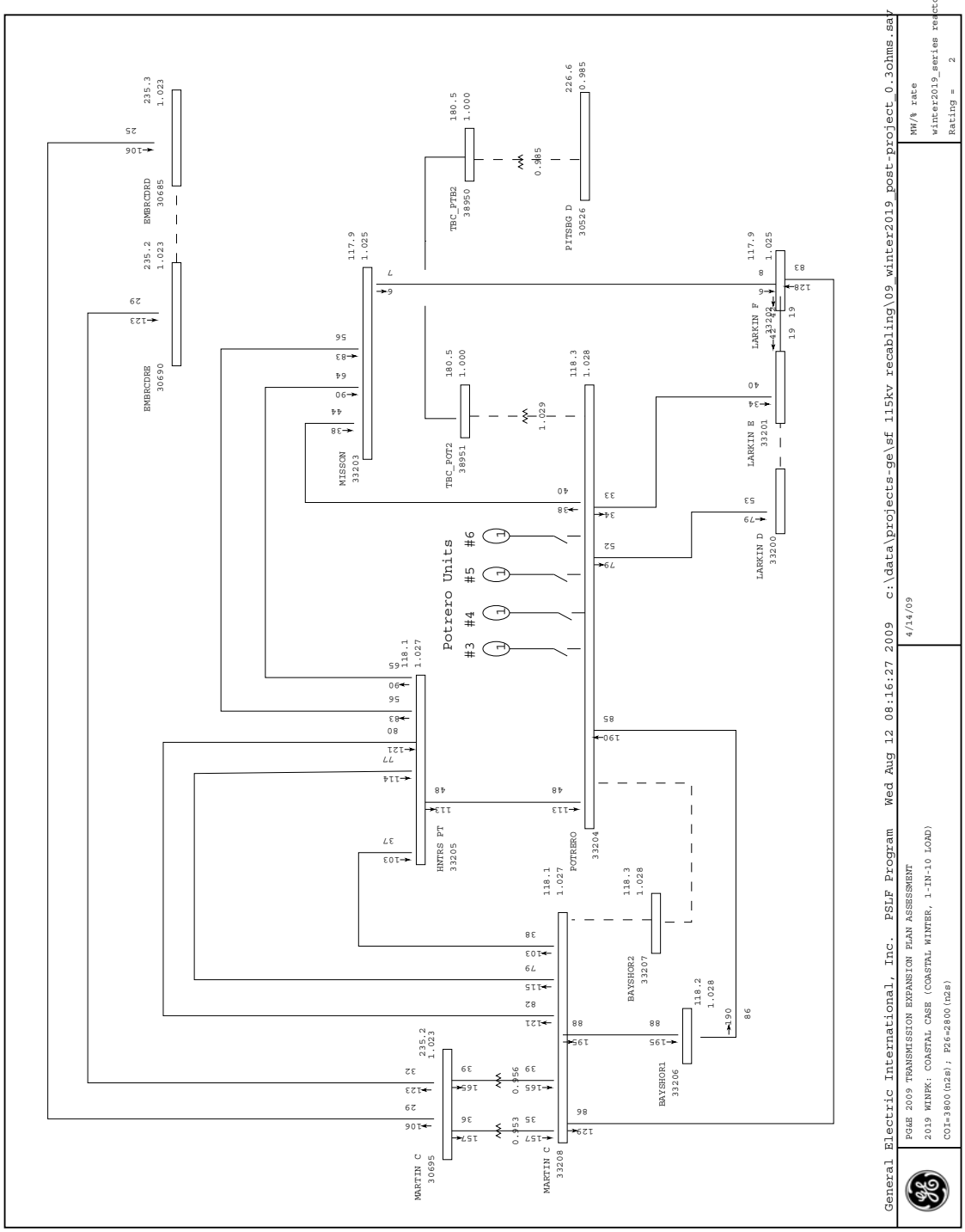

Figure 4-106: Outage of Trans Bay Cable and Martin-Bayshore-Potrero # 2 115 kV Cable (N-1-1), Year 2019 (Post-Project)

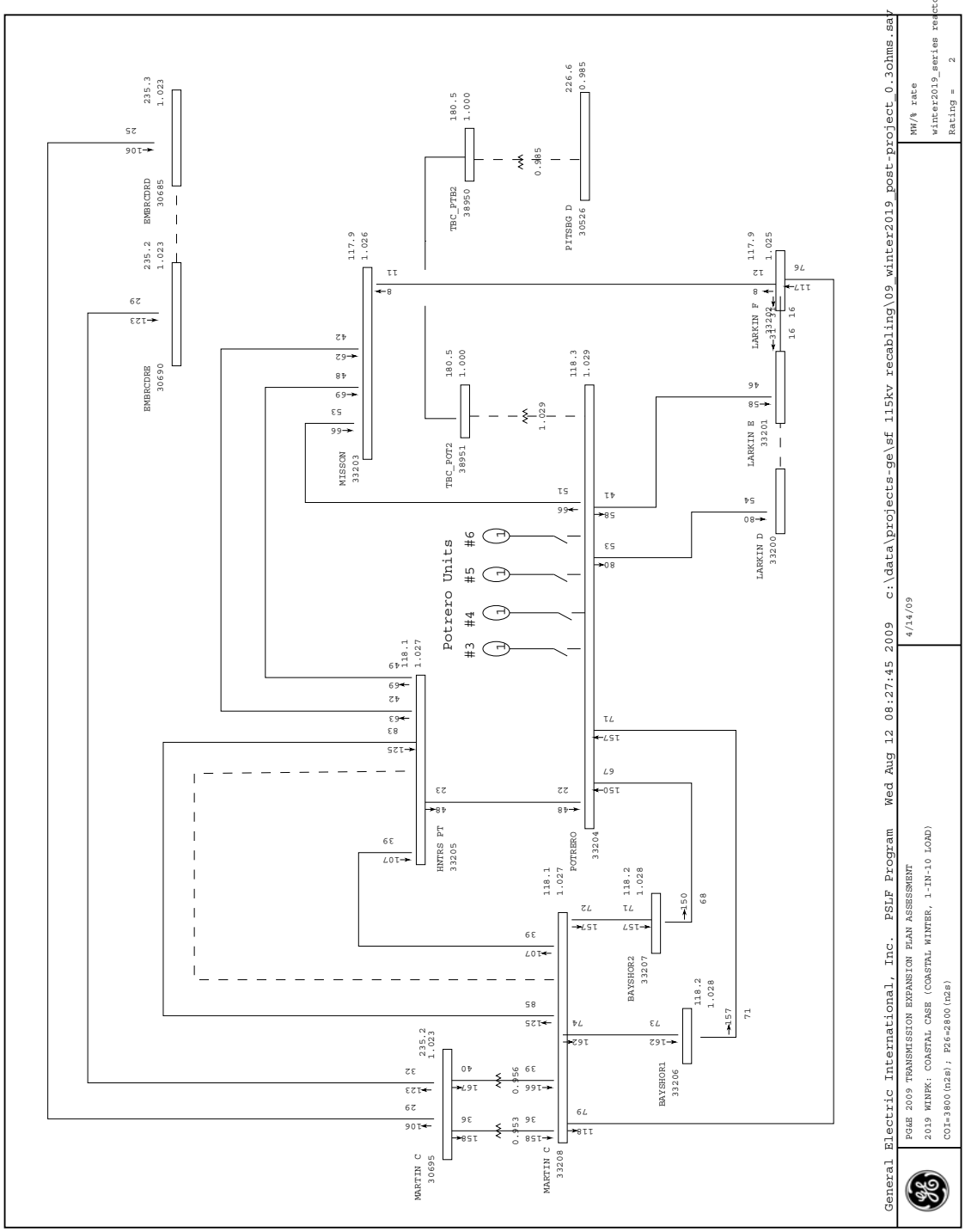

Figure 4-107: Outage of Trans Bay Cable and Martin-Hunters Point # 3 115 kV Cable (N-1-1), Year 2019 (Post-Project)

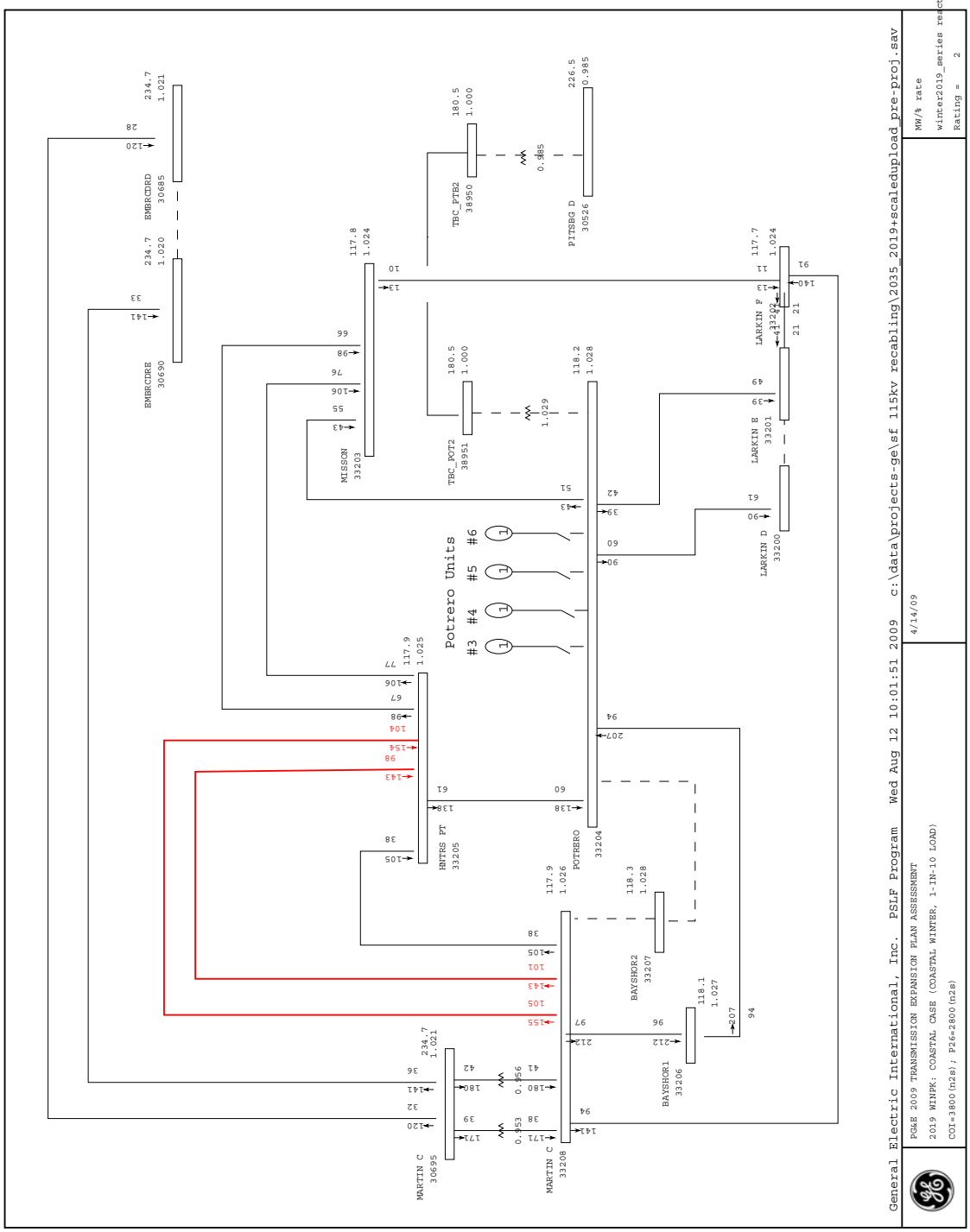

Figure 4-108: Outage of Trans Bay Cable and Martin-Bayshore-Potrero # 2 115 kV Cable (N-1-1), Year 2035 (Pre-Project)

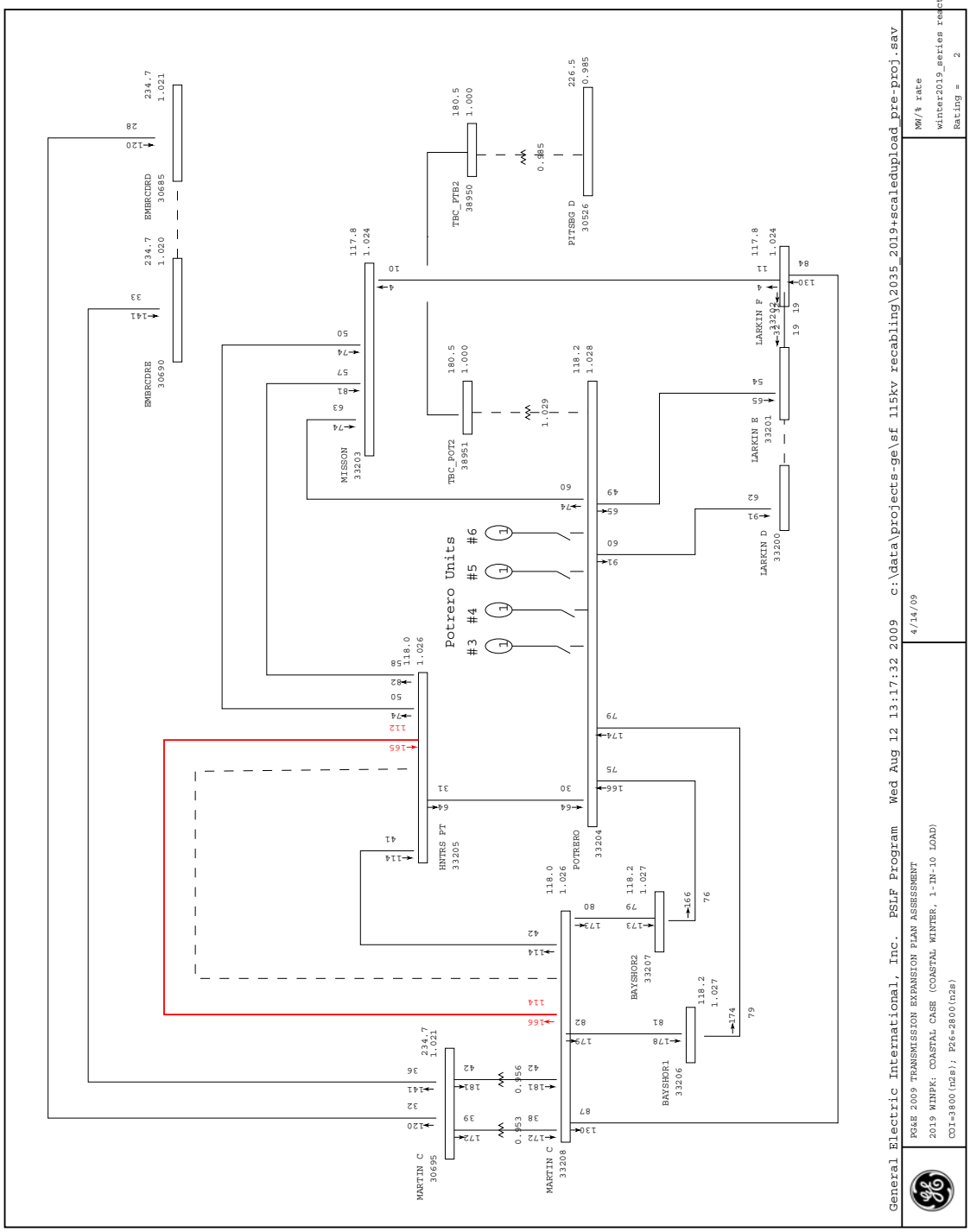

Figure 4-109: Outage of Trans Bay Cable and Martin-Hunters Point # 3 115 kV Cable (N-1-1), Year 2035 (Pre-Project)

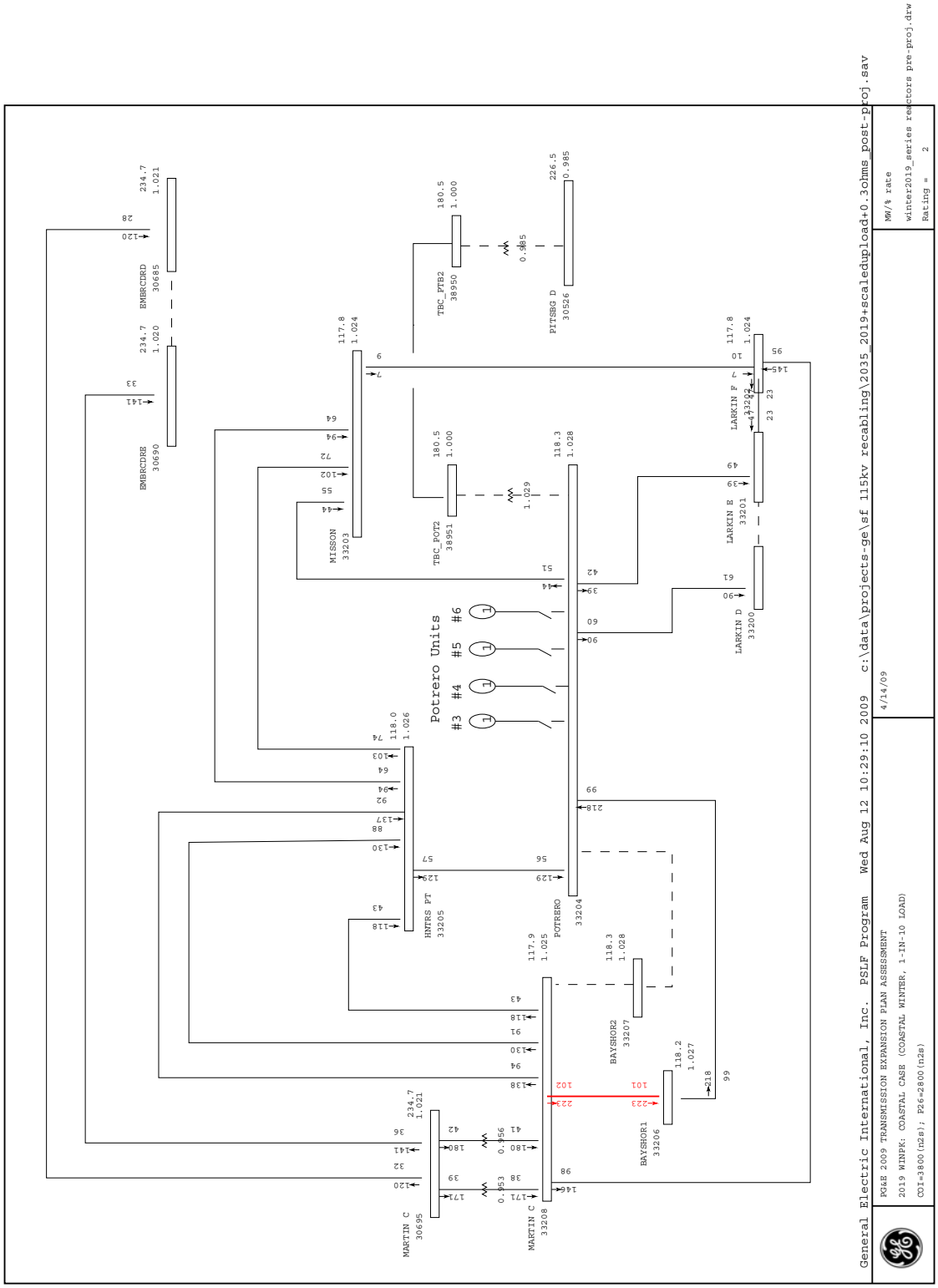

Figure 4-110: Outage of Trans Bay Cable and Martin-Bayshore-Potrero # 2 115 kV Cable (N-1-1), Year 2035 (Post-Project)

CHAPTER 5

Table of Contents

2014 Projects 3
Vaca Dixon-Davis Voltage Conversion 4

2014 Projects

Vaca Dixon-Davis Voltage Conversion

TARGETED IN-SERVICE DATE

May 2014

PURPOSE AND BENEFIT

Reliability – NERC Compliance

PROJECT CLASSIFICATION

This is a new project.

DESCRIPTION AND SCOPE OF PROJECT

This alternative proposes to convert the facilities between Vaca Dixon and Davis Substations to 115 kV operation as follows:

1. Reconductor and convert the two 60 kV lines between UC Davis and Vaca-Dixon to 115 kV operation with larger conductor whose emergency capability is at least 1400 Amps.
2. Reconductor the two 115 kV lines between UC Davis and Davis with larger conductor whose emergency capability is at least 1200 Amps.
3. Construct a new 115 kV switching station at Davis to accommodate the voltage conversion work.
4. Convert Dixon substation to 115 kV operation and loop into the Dixon-Vaca No. 2 115 kV Line.
5. Construct a switching station at UC Davis, looping into the Dixon-Vaca No. 1 115 kV Line.
6. Convert Plainfield substation to 115 kV operation and loop into the Woodland-Davis 115 kV Line.
7. Transfer Batavia and Maine Prairie substations to distribution service.
8. Transfer the Winters Substation distribution load to Putah Creek Substation.
9. Dixon Canning, Travis AFB and Travis AFB Hospital are customer owned substations and are responsible for upgrading their equipment.
10. Connect Travis AFB and Travis AFB Hospital to the Dixon-Vaca Nos. 1 and 2 115 kV lines in a double-tap arrangement
11. Replace Vaca Dixon 230/115 kV Transformer Nos. 2 and 2A with a three-phase, 420 MVA transformer.

12. Replace limiting switches and re-rate the Woodland-Davis 115 kV Line (Woodland-Plainfield and Davis-Plainfield 115 kV lines) with a higher wind speed rating.
13. Reconductor the limiting sections of the West Sacramento-Davis (1.5 miles) 115 kV lines with higher capacity conductors that are rated to handle at least 1,100 Amps under emergency conditions.

This alternative would establish Vaca Dixon Substation as a strong power source to the Davis area and will provide enough transmission capacity to meet future electric demand. The addition of two new import lines to the 115 kV system would increase reliability by protecting the area against numerous double line outages.

Using system unit costs, the total estimated cost for this long term alternative is estimated to be between $70 million and $100 million.

BACKGROUND

The Davis/Yolo area is located in Yolo County and is part of PG&E's Sacramento Division. Yolo County covers approximately 650,000 acres and has a population of 200,000. Davis, Woodland and West Sacramento are the largest cities PG&E provides service to in the county. The University of California – Davis (UCD), which has a student enrollment of about 31,000, is a customer of the Western Area Power Authority (WAPA). A portion of the UCD South Campus is in Solano County. The City of Dixon and Travis Air Force Base (AFB), a WAPA customer, are also located in Solano County.

Electric power is transmitted from the grid to the Davis area at Rio Oso and Vaca Dixon transmission substations and delivered via a network of two 230 kV, three 115 kV, and three 60 kV transmission lines to serve customers in this area.

The Davis area system is comprised of two 230 kV, three 115 kV, and three 60 kV lines:

- Rio Oso-Brighton 230 kV Line
- Brighton-Bellota 230 kV Line
- Rio Oso-West Sacramento 115 kV Line
- Rio Oso-Woodland Nos. 1 and 2 115 kV Lines
- Dixon-Vaca Nos. 1 and 2 60 kV Lines
- Vaca-Plainfield Junction 60 kV Line

The Davis area's local electric transmission is comprised of a 60 kV and a 115 kV system, which are separated by normally open points between Dixon Canning and UCD[1]. These two systems serve eleven distribution substations and five customer-owned substations. Travis Air Force Base (AFB), the Cities of Dixon, Winters, and Plainfield, and various electric customers are served from Vaca Dixon Substation via three 60 kV lines. Rio Oso Substation serves the 115 kV system (UCD and the Cities of Davis, Woodland, and West Sacramento) via one 230 kV and three 115 kV lines. The area also includes a local generation facility, Woodland Biomass (25 MW) in the City of Woodland which is tapped onto the Woodland-Davis 115 kV Line.

[1] Although two of the three 60 kV lines run from Vaca Dixon to Davis Substation, both lines were operated normally open upon the completion of the Davis-UC Davis 115 kV Conversion Project in 2007, which effectively removed all the 60 kV equipment from Davis Substation.

The recorded peak demand in the Davis area was 498 MW in 2007. In 2008, the recorded peak demand was 515 MW[2] , which is a 3.4 percent increase from the previous year. The projected annual load growth, as indicated by Distribution Planning's 2008 load growth projection, in the Davis area is 3.6% (16.2 MW/yr). Not included in Distribution Planning's projection is the expected expansion of UCD. The UCD demand is expected to increase from 36 MW today to 63 MW by 2012 and 75 MW by 2015. The expansion at UCD will be evaluated based on the peak demand forecast as provided by WAPA.

Planning Analysis has identified that by 2014, multiple equipment may overload during emergency conditions, namely: the Rio Oso-West Sacramento 115 kV Line overloads by 4% following a combined outage of the West Sacramento-Brighton 115 kV Line and Woodland Biomass Generation (L-1/G-1). The Vaca Dixon 115/60 kV Transformer No. 5 overloads by 9% following an outage of Vaca Dixon 115/60 kV Transformer No. 9. The Woodland-Davis 115 kV Line loads up to 100% of its emergency rating following an outage of the Rio Oso-Brighton 230 kV Line. In addition, the Woodland-Davis and Brighton-Davis 115 kV Lines overload by 37% and 26% respectively following a combined outage of the Rio Oso-West Sacramento and West Sacramento-Brighton 115 kV Lines. Similarly, the Rio Oso-West Sacramento 115 kV Line overloads by 14% following a combined outage of the Rio Oso-Woodland 115 kV Line Nos. 1 and 2. The proposed project is the most effective plan to mitigate the capacity issues in the area beyond the next 15 years.

STUDY CRITERIA

CAISO grid planning criteria
NERC Transmission Planning Reliability Standards

BASE CASE ASSUMPTIONS

PG&E used base cases and assumptions approved in the CAISO United Planning Assumptions and Study Plan for the 2009 Transmission Planning cycle.

[2] The recorded peak is a non-simultaneous addition recorded peaks at each substation.

[3] This includes estimated load information for the five customer-owned substations in the Davis area, which consists of a total of approximately 65 MW of electric demand.

OTHER ALTERNATIVES CONSIDERED

Alternative 1: Status Quo

This alternative does not propose any changes to the present system and is not recommended as it does not mitigate the reliability and capacity concerns in the area. Up to approximately 200 MW of area load could potentially need to be dropped in order to maintain system integrity.

Alternative 2: Utilize Existing Idle 115 kV Transmission Lines

This alternative proposes to utilize existing idle 115 kV transmission lines and reinforce the existing Davis area 115 kV transmission system.

1. Construct a new 115 kV Switching Station at Putah Creek and Fulton Jct.
2. Install circuit breakers at Madison, terminating the Vaca-Madison 115 kV Line.
3. Loop Woodland into the Rio Oso-Woodland No. 2 line, creating the Vaca-Putah Creek-Woodland, Rio Oso-Woodland, and Rio Oso-Madison 115 kV lines.
4. Reconductor the Vaca-Madison (23 miles) and Vaca-Fulton Jct (11.5 miles)
   115 kV lines with higher capacity conductors that are rated to handle at least 1,100 Amps under emergency conditions.
5. Reconductor the Rio Oso-Woodland Nos. 1 and 2 115 kV lines (58 miles total) with higher capacity conductors that are rated to handle at least 1,100 Amps under emergency conditions.
6. Covert Plainfield substation to 115 kV operation and loop into the Woodland-Davis 115 kV Line.
7. Transfer the Winters Substation distribution load to Putah Creek Substation.
8. Reconductor the Brighton-Davis (28 miles), West Sacramento-Davis (1.5 miles), Rio Oso-West Sacramento (30 miles), and Woodland-Davis (Woodland-Plainfield and Davis-Plainfield: 25 total miles) 115 kV lines with higher capacity conductors that are rated to handle at least 1,100 Amps under emergency conditions.
9. Install at least 100 MVAR of voltage support at Davis Substation or UC Davis Switching Station.

Using system unit costs, the total cost for this long term alternative is estimated to be between $145 million and $222 million.

Alternative 3: 60 kV and 115 kV System Reinforcement

This alternative proposes to reinforce the existing 60 kV and 115 kV systems to mitigate the thermal and voltage issues.

1. Reconductor the Brighton-Davis (28 miles), West Sacramento-Davis (1.5 miles), Rio Oso-West Sacramento (30 miles), and the Rio Oso-Woodland Nos. 1 and 2 (58 miles total) 115 kV lines with higher capacity conductors that are rated to handle at least 1,100 Amps under emergency conditions.
2. Covert Plainfield substation to 115 kV operation and loop into the Woodland-Davis 115 kV Line.
3. Replace limiting switches and re-rate the Woodland-Davis 115 kV Line (Woodland-Plainfield and Davis-Plainfield 115 kV lines) with higher wind speed assumptions.
4. Replace Vaca Dixon 115/60 kV Transformer No. 5 with a three-phase, 200 MVA transformer.
5. Install at least 100 MVAR of voltage support at Davis Substation or UC Davis Switching Station.

Using system unit costs, the total cost for this long term alternative is estimated to be between $77 million and $120 million.

Alternative 4: Vaca-Davis-Woodland 230 kV Double Circuit Tower Line

This alternative proposes to build a new Double Circuit Tower Line (DCTL) between Vaca-Dixon Substation and the Davis/Woodland area and build two new 230 kV substations to offload the local 115 kV system.

1. Extend the Vaca-Dixon 230 kV Bus to acquire two new 230 kV lines.
2. Construct a 20 mile DCTL extending north from Vaca-Dixon Substation to the Davis/Woodland area.
3. Construct a new substation west of the city of Davis and interconnect to the 230 kV DCTL from Vaca-Dixon Substation.
4. Construct a new substation south of the city of Woodland and interconnect to the 230 kV DCTL from the new Davis 230 kV Substation.
5. Offload 70 MW from Davis Substation on to the new 230 kV Davis substation.
6. Offload 60 MW from Woodland Substation and 10 MW from Plainfield Substation onto the new 230 kV Woodland substation.
7. Replace limiting switches and re-rate the Woodland-Davis 115 kV Line (Woodland-Plainfield and Davis-Plainfield 115 kV lines) with a higher wind speed rating.

Using system unit costs, the total cost for this long term alternative is estimated to be between $75 million and $113 million.

PROJECT SCHEDULE

- Environmental and Permitting Processes – TBD
- Design – TBD
- Major Equipment – Conductors
- Construction – TBD
- Operation Date – May 2014

KEY ISSUES

- Land-Use Restrictions – TBD
- Environmental Concerns – TBD
- Special Metering or Protection – TBD
- Common Mode Exposure Items – None
- Interaction with other Projects or Studies – T177C: Brighton – Davis 115 kV Line, Davis Area Long Term Study

GEPSLF MODELING INFORMATION

```
##########################################################################################
# (1)
#Reconductor and convert the two 60kV lines between Davis and Vaca Dixon to 115kV with conductor capability of at least 1400 amps

#Remove Batavia and Maine Prairie substations and Cashe Slough 60kV Tap
#buses: CACHSLJ1 CACHSLJ2 CACHSTAP BTAV-JCT MAINE-PR DIXON-J1 DIXON-J2
EXTRACT   32112 32113 32107 32108 32109 32105 32101

#Move Winters load to Putah Creek
EXTRACT 32090
OLDLOAD  31952, LOADID=1, PLOAD=22.8, PF=0.99

#Remove Vaca Dixon 115/60 kV transformers #5 & #9
PURGE  32088, 31998, CKT=5
PURGE  32088, 31998, CKT=9

#Remove Vaca Dixon 60 kV bus
EXTRACT 32088

#Convert Travis AFB area buses to 115kV
OLDBUSD   32096, BASKV=115
OLDBUSD   32094, BASKV=115
OLDBUSD   32098, BASKV=115
OLDBUSD   32097, BASKV=115
OLDBUSD   32099, BASKV=115
OLDBUSD   32106, BASKV=115
OLDBUSD   32100, BASKV=115

#Reconductor Vaca-Davis 115 kV #1 line (old Dixon-Vaca #1 60kV line)
#Vaca to Vaca JCT1 (795 SSAC)
NEWSECDD 31998, 32096, 1, 1, RPU=0.00349528, XPU=0.01928448, BPU=0.00288490, MVA1=302, MVA2=302, MVA3=330,
MVA4=3307, STATUS=1
#Vaca JCT1 to Dixon Canning (795 SSAC)
NEWSECDD  32096, 32106, 1, 1, RPU=0.00767019, XPU=0.04231872, BPU=0.00633074, MVA1=302, MVA2=302, MVA3=330,
MVA4=330, STATUS=1
#Dixon Canning to UC Davis (CAMPUS) (795 SSAC)
NEWSECDD  32102, 32106, 1, 1, RPU=0.00436910, XPU=0.02410560, BPU=0.00360612, MVA1=302, MVA2=302, MVA3=330,
```

```
MVA4=330, STATUS=1
#UC Davis (CAMPUS) to Davis (795 SSAC)
OLDSECDD  32102, 31990, 1, 1, RPU=0.00145637, XPU=0.00803520, BPU=0.00120204, MVA1=302, MVA2=302, MVA3=330,
MVA4=330, STATUS=1

#Convert existing Dixon-Vaca #1 60kV line to 115kV
#Vaca Jct#1 to Travis Jt(2/0 Cu, 7 mi) - Change line parameters from 60kV to 115kV
OLDSECDD 32096, 32098, 1, 1, RPU=.02548, XPU=.04221, BPU=.00497, MVA1=56, MVA2=65, MVA3=83, MVA4=88, STATUS=1
# Travis Jct to Travis AFB(715 Al, 2.8mi)- Change line parameters from 60kV to 115kV
OLDSECDD 32097, 32098, 1, 1, RPU=0.00308, XPU=0.015422, BPU=0.00215, MVA1=126, MVA2=148, MVA3=194, MVA4=207,
STATUS=1

#Reconductor Vaca-Davis 115 kV #2 line (old Dixon-Vaca 60kV Line #2)
#Vaca to Vaca JCT2 (795 SSAC)
NEWSECDD 31998, 32094, 2, 1, RPU=0.00349528, XPU=0.01928448, BPU=0.00288490, MVA1=302, MVA2=302, MVA3=330,
MVA4=330, STATUS=1
#VACA JCT2 to Dixon (795 SSAC)
NEWSECDD  32100, 32094, 1, 1, RPU=0.00487397, XPU=0.02689114, BPU=0.02689114, MVA1=302, MVA2=302, MVA3=330,
MVA4=330, STATUS=1
#Dixon to Davis (795 SSAC)
NEWSECDD  32100, 31990, 1, 1, RPU=0.00844692, XPU=0.04660416, BPU=0.00697183, MVA1=302, MVA2=302, MVA3=330,
MVA4=330, STATUS=1

#Convert exisiting Dixon-Vaca #2 60kV Line to 115kV
# Vaca Jct#2 to Travis Jt(2/0 Cu, 7 mi)- Change line parameters from 60kV to 115kV
OLDSECDD 32094, 32098, 1, 1, RPU=.02548, XPU=.04221, BPU=.00497, MVA1=56, MVA2=65, MVA3=83, MVA4=88, STATUS=0
# Travis Jct to Travis Hospital (715 Al, 2.8mi)- Change line parameters from 60kV to 115kV
OLDSECDD 32099, 32098, 1, 1, RPU=0.00308, XPU=0.015422, BPU=0.00215, MVA1=126, MVA2=148, MVA3=194, MVA4=207,
STATUS=1

# (2)
#Convert Plainfield sub to 115kV operation and loop into Woodland-Davis 115kV Line

#Remove PLFLDJCT
#EXTRACT 32082 (joscelyn left in)
#Remove PLFLDJCT to WLLW SLJ line
PURGE 32082 32084, 1, 1

#Convert Plainfield sub to 115kV
OLDBUSD   32092, BASKV=115
OLDBUSD   32082, BASKV=115

# Connect Plainfield into Woodland-Davis 115 kV Line (between Davis and Woodland Biomass)
# 115 kV line ~7.85 miles from Davis (total line length - 10 miles)
LINETAP  31962, 31990, 32095, TEMP, .785, 1, 1

# 115 kV Tap line ~6.5 miles
PURGE  32082, 32092, 1, 1                    # Plainfield Jct - Plainfield
NEWSECDD  32095, 32092, 1, 1, RPU=.00708, XPU=.03377, BPU=.00537, MVA1=125, MVA2=147
NEWSECDD  32082, 32092, 1, 1, RPU=.00708, XPU=.03377, BPU=.00537, MVA1=125, MVA2=147
MOVE_BRANCH  31990, 32095,  1,  32082

# (3)
#Replace Vaca Dixon 230/115kV transformer # 2 & 2A with a three phase, 420 MVA transformer
#Remove bus for banks 2/2A
EXTRACT   31999
#New 420MVA transformer
NEW_TRAN  31998, 30460, 2, ZR=0.001200, ZX=0.056400, MVA1=420, MVA2=462, MVA3=420, MVA4=462, VNOMF=115,
VNOMT=230, MVABASE=252, +
        STAT=1, TYPE=1, TAPF=1, VMAX=1.5, VMIN=.51, STEPP=.00625, TMAX=1.5, TMIN=.5, TAPFP=1, TAPFS=1, AREA=4,
ZONE=304

# (4)
# Re-rate Woodland-Davis 115 kV line (4 fps)
# Existing:  Woodland to Davis       715 Al                    11.62 miles
#                                                    Total Line Length:        11.62 miles

# Plainfield looped into Woodland-Davis


# Woodland-Plainfield 115 kV line
# Woodland to Woodland Biomass (1.60 miles)
OLDSECDD  31962, 31970, 1, 1, 1, MVA1=151, MVA2=175

# Woodland Biomass to Plainfield (1.09 miles)
OLDSECDD  31962, 32095, 1, 1, 1, MVA1=151, MVA2=175

# Temp to Plainfield (6.58 miles)
OLDSECDD  32095, 32092, 1, 1, 1, MVA1=151, MVA2=175
```

```
# Davis-Plainfield 115 kV line
# Plainfield Jct to Plainfield (6.58 miles)
OLDSECDD  32082, 32092, 1, 1, 1, MVA1=151, MVA2=175

# Davis to Plainfield Jct (7.88 miles)
OLDSECDD  32082, 31990, 1, 1, 1, MVA1=151, MVA2=175


# (5)
#Reconductor the Brighton-Davis & West Sac-Davis 115kV lines to 1100 amps emergency

# Reconductor West Sacramento-Davis 115 kV line
# Existing:  West Sacramento to 000/001                    715 Al                    0.02 miles
#                        000/001  to 010/017                          477 SSAC  10.24 miles
#                        010/017  to 011/019                          715 Al                    1.00 miles
#                        011/019  to 012/003                          477 SSAC  0.22 miles
#                        012/003  to Davis                            715 Al                    0.51 miles
#                                                                     Total Line Length:        11.99 miles

# Replace limiting 715 Al conductor (1.53 miles) with 477 SSAC
# West Sacramento to Deepwater Tap (1 miles)
OLDSECDD  31980, 31986, 1, 1, 1, RPU=0.001568, XPU=0.005599, BPU=0.000768, MVA1=224, MVA2=224, MVA3=245, MVA4=245

# Deepwater Tap to Davis (11 miles)
OLDSECDD  31980, 31990, 1, 1, 1, RPU=0.017248, XPU=0.061589, BPU=0.008448, MVA1=224, MVA2=224, MVA3=245, MVA4=245
##################################################################################
```

MISCELLANEOUS DATA

- PG&E will construct, own, and finance the project
- PG&E will be the planned operator of the project

ATTACHMENTS

1. Single Line Diagrams
2. Demand Forecast
3. Power Flow Summary
4. Pre and Post Project Power Flow Plots

Attachment 1: Single Line Diagrams

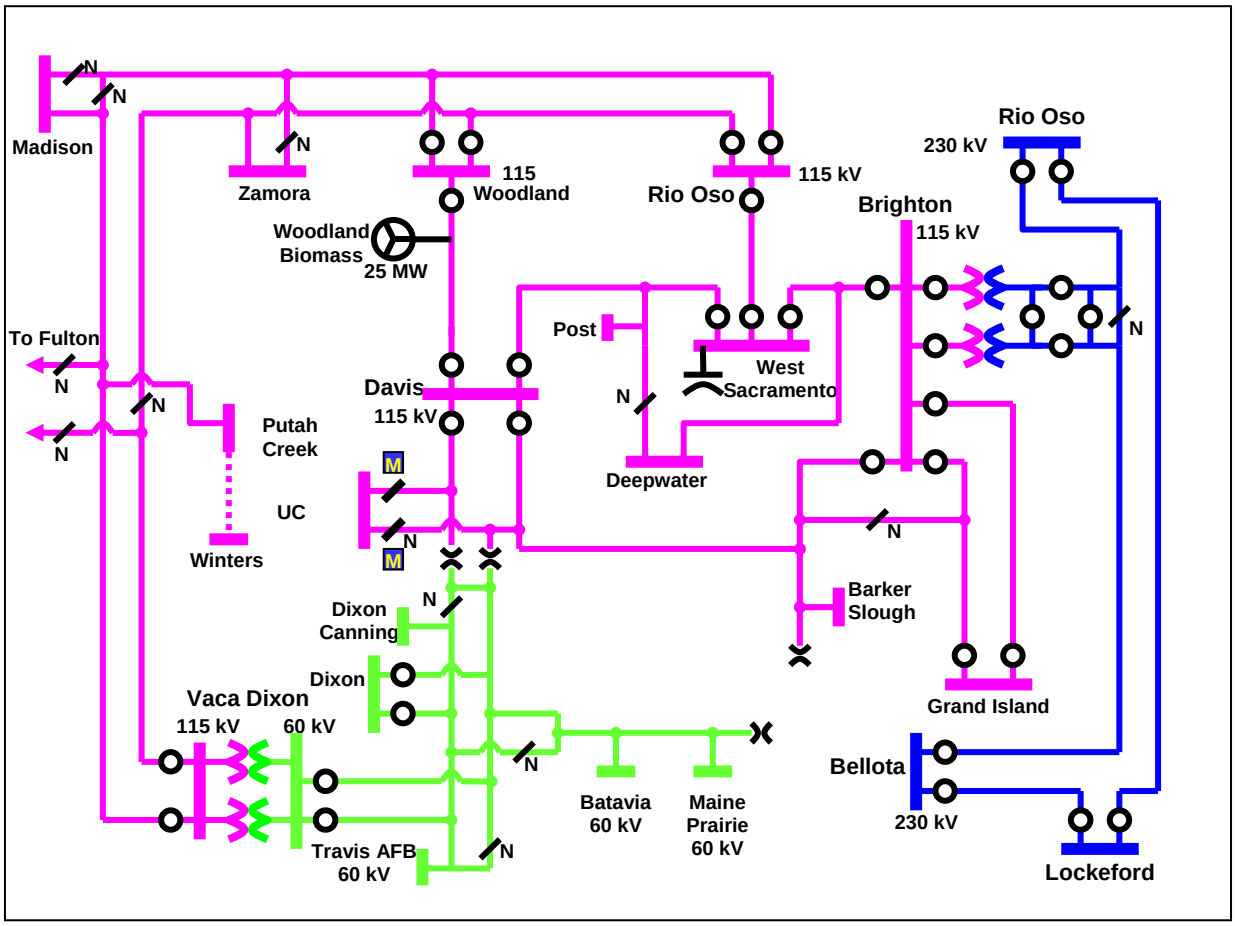

Figure 5-1: Existing Single Line Diagram

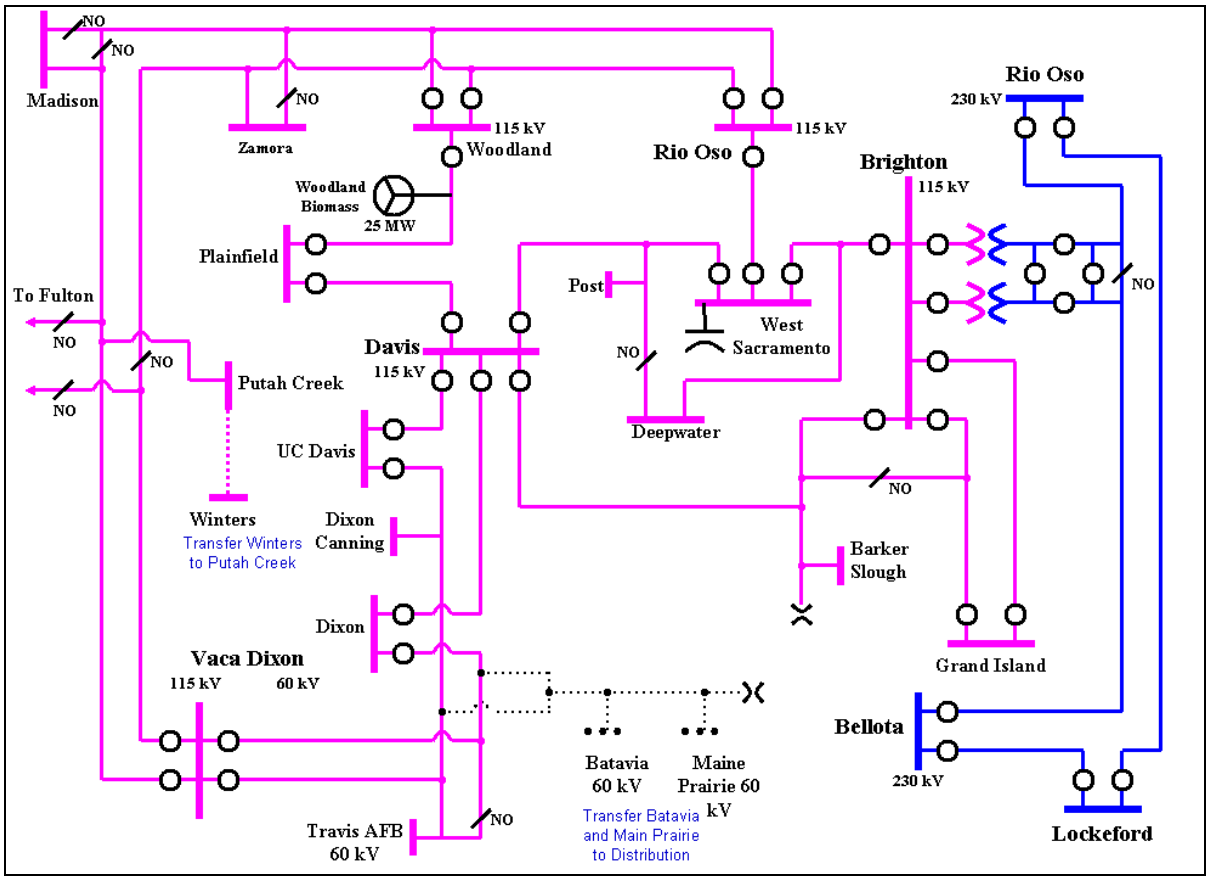

Figure 5-2: Proposed Single Line Diagram

Attachment 2: Demand Forecast

Table 5-1: Demand Forecast

Substation	2010 (MW)	2011 (MW)	2012 (MW)	2013 (MW)	2014 (MW)	Growth Rate (MW/Year)
Davis	111	114.3	117.6	118	118.5	1.9
Deepwater	40.9	42.2	43.5	44.6	45.8	1.2
Knights Landing	9.4	9.4	9.4	9.3	9.3	0
West Sacramento	82	84.5	87	89.2	91.5	2.4
Woodland	116.2	117.1	118.1	118.6	119.3	0.8
Zamora	10	10	10	9.9	9.9	0
Dixon	34.5	36.7	37.2	39.4	39.8	1.3
Plainfield	13.6	13.8	13.8	15.9	18.1	1.1
Winters	6	6.1	6.2	6.3	6.4	0.1
Grand Island	33	34	35	35.9	36.9	1.0
UC Davis	36.6	36.6	36.6	36.6	36.6	0
Dixon Canning	3.5	3.5	3.5	3.5	3.5	0
Travis AFB	18.7	18.7	18.7	18.7	18.7	0
Travis Hospital	4.8	4.8	4.8	4.8	4.8	0
Hunt	0.3	0.3	0.3	0.3	0.3	0
Post Office	2.1	2.1	2.1	2.1	2.1	0
Total	522.6	534.1	543.8	553.1	561.5	19.5

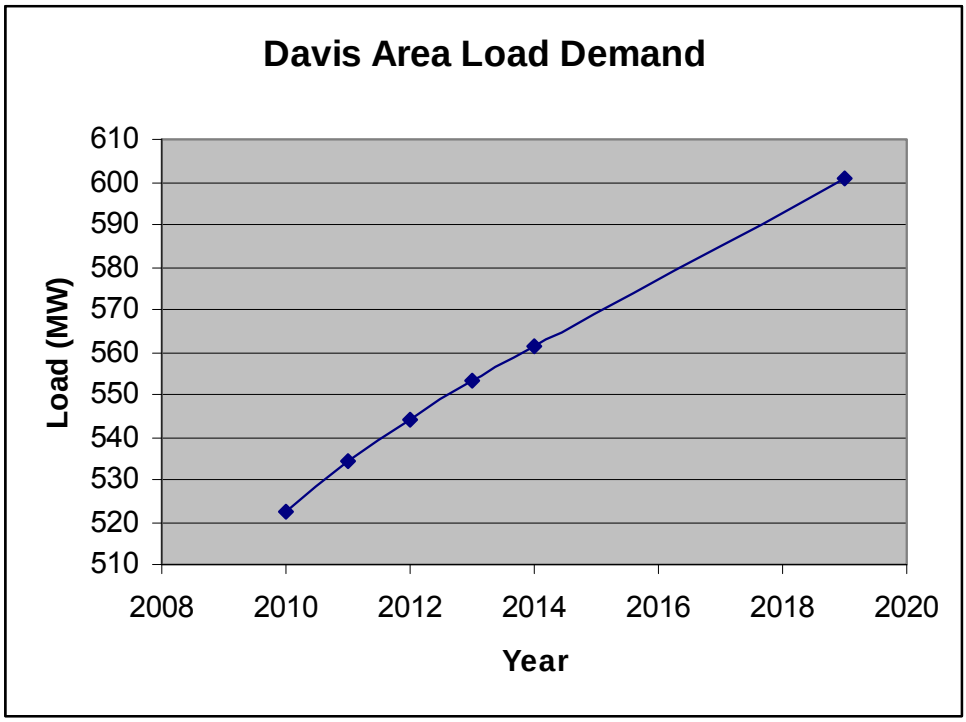

Figure 5-3: Plot of Demand Forecast

Attachment 3: Power Flow Summary

Table 5-2: Power Flow Summary

Contingency	Facility Affected	2011 (Pre-Project)	2012 (Pre-Project)	2013 (Pre-Project)	2014 (Pre-Project)	2014 (Post-Project)
West Sacramento – Brighton 115 kV Line and Woodland Biomass Gen (L-1/G-1)	Rio Oso - West Sacramento 115 kV Line	97%	102%	103%	104%	60%
	Brighton – Davis 115 kV Line	107%	84%	86%	89%	23%
Vaca Dixon 115/60 kV Transformer # 5	Vaca Dixon 115/60 kV Transformer # 9	98%	99%	105%	109%	N/A
Rio Oso-Brighton 230 kV (L-1)	Woodland-Davis 115 kV Line	94%	103%	104%	100%	16%
Rio Oso-West Sacramento 115 kV & West Sacramento-Brighton 115 kV (N-2)	Woodland-Davis 115 kV Line	122%	134%	137%	137%	16%
	Brighton-Davis 115 kV line	134%	120%	122%	126%	38%
Rio Oso-Woodland #1 & #2 115 kV (N-2)	Rio Oso-West Sacramento 115 kV Line	106%	113%	115%	114%	60%

Attachment 4: Pre and Post Power Flow Plots Summary

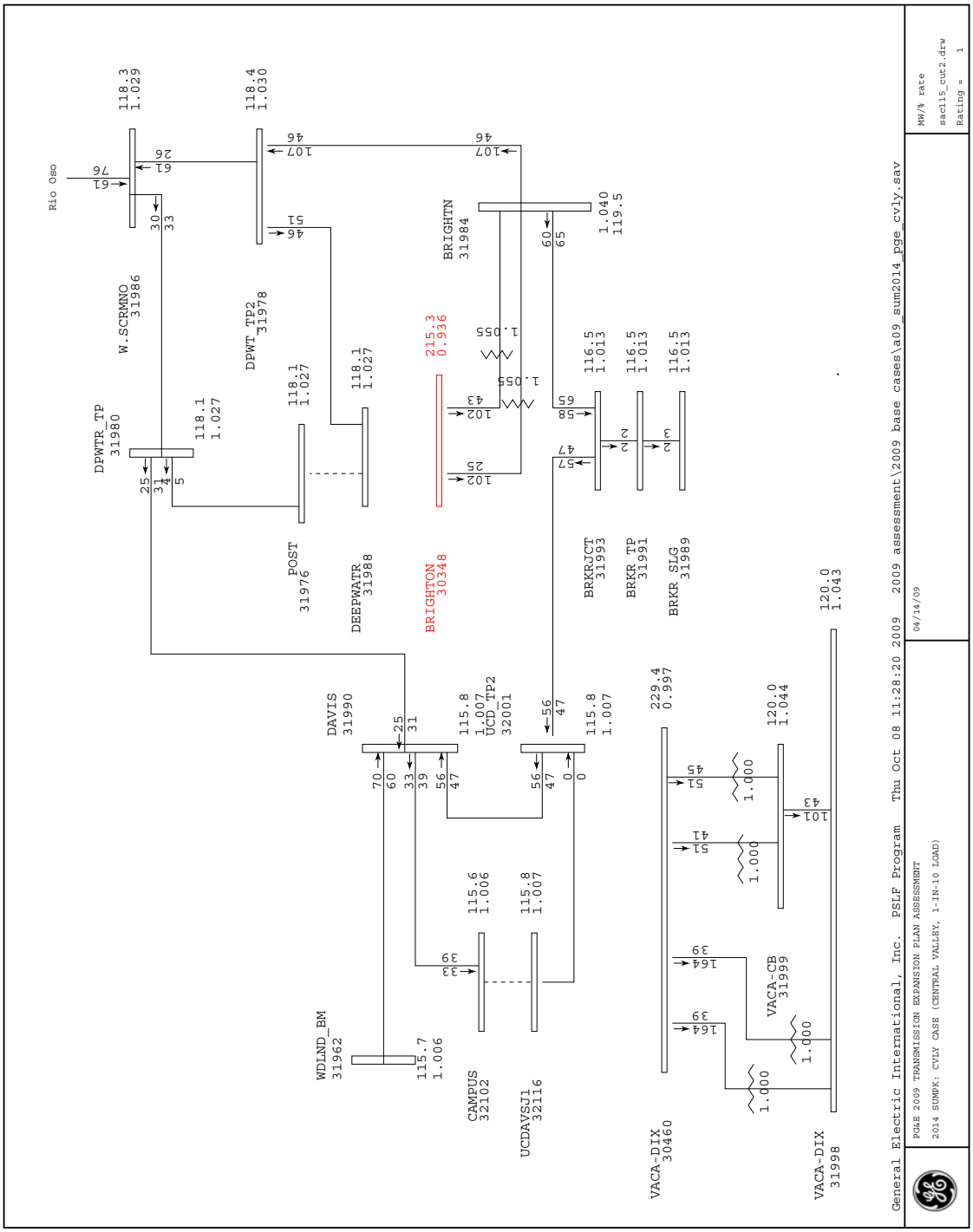

Figure 5-4: Pre-Project – 2014 Normal Conditions

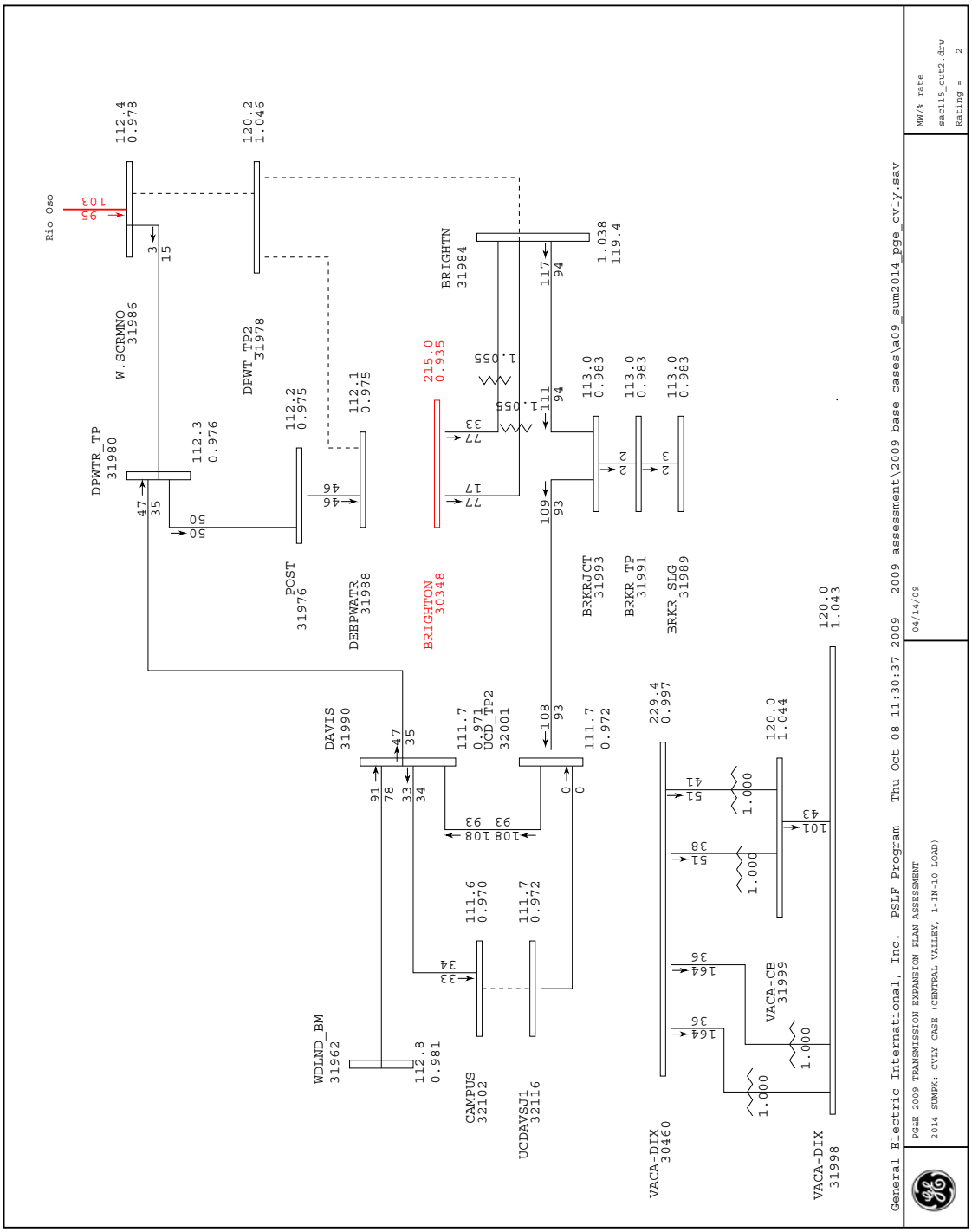

Figure 5-5: Pre-Project – 2014 Loss of West Sacramento-Brighton 115 kV Line/Woodland Biomass Gen (L-1/G-1)

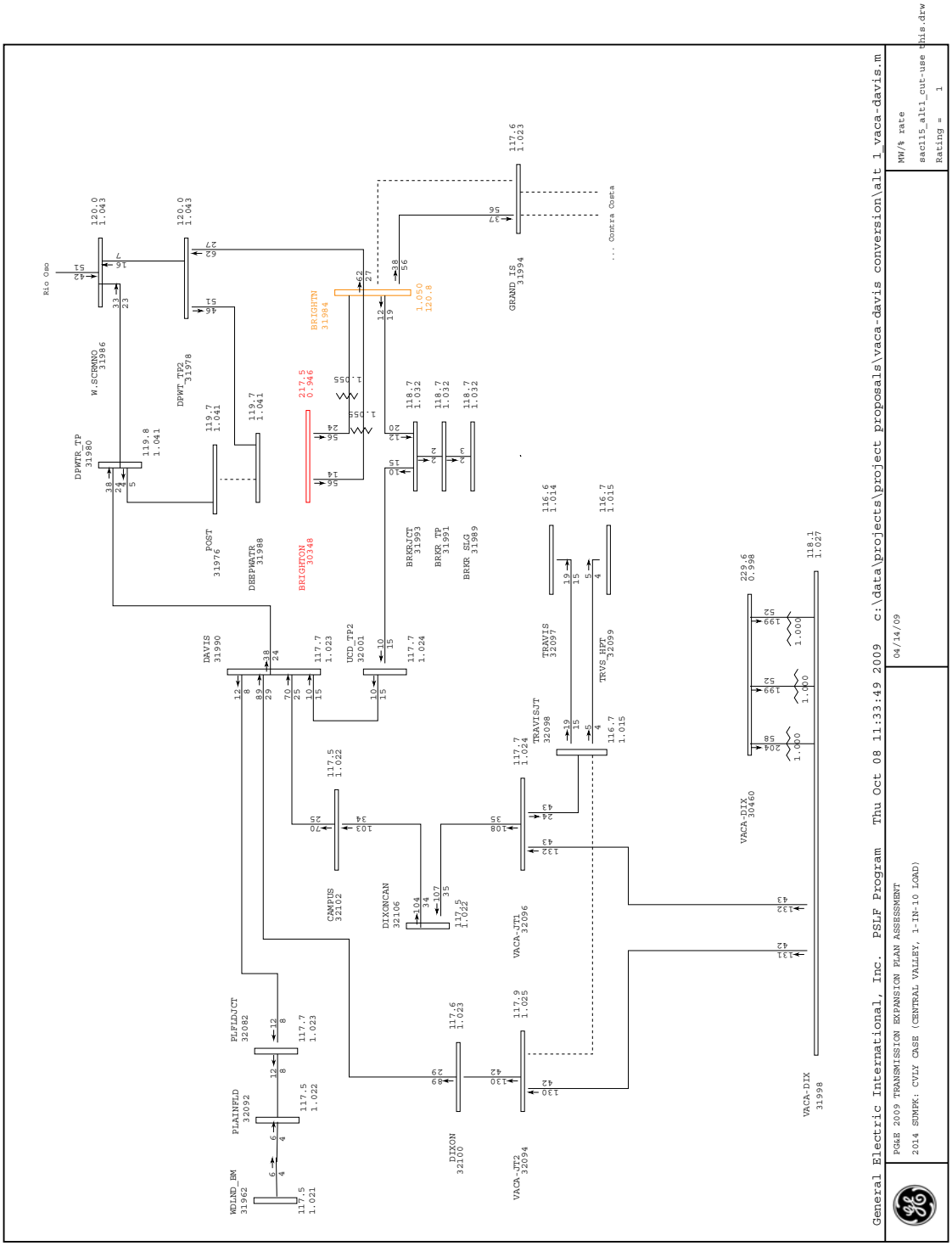

Figure 5-6: Post-Project – 2014 Normal Conditions

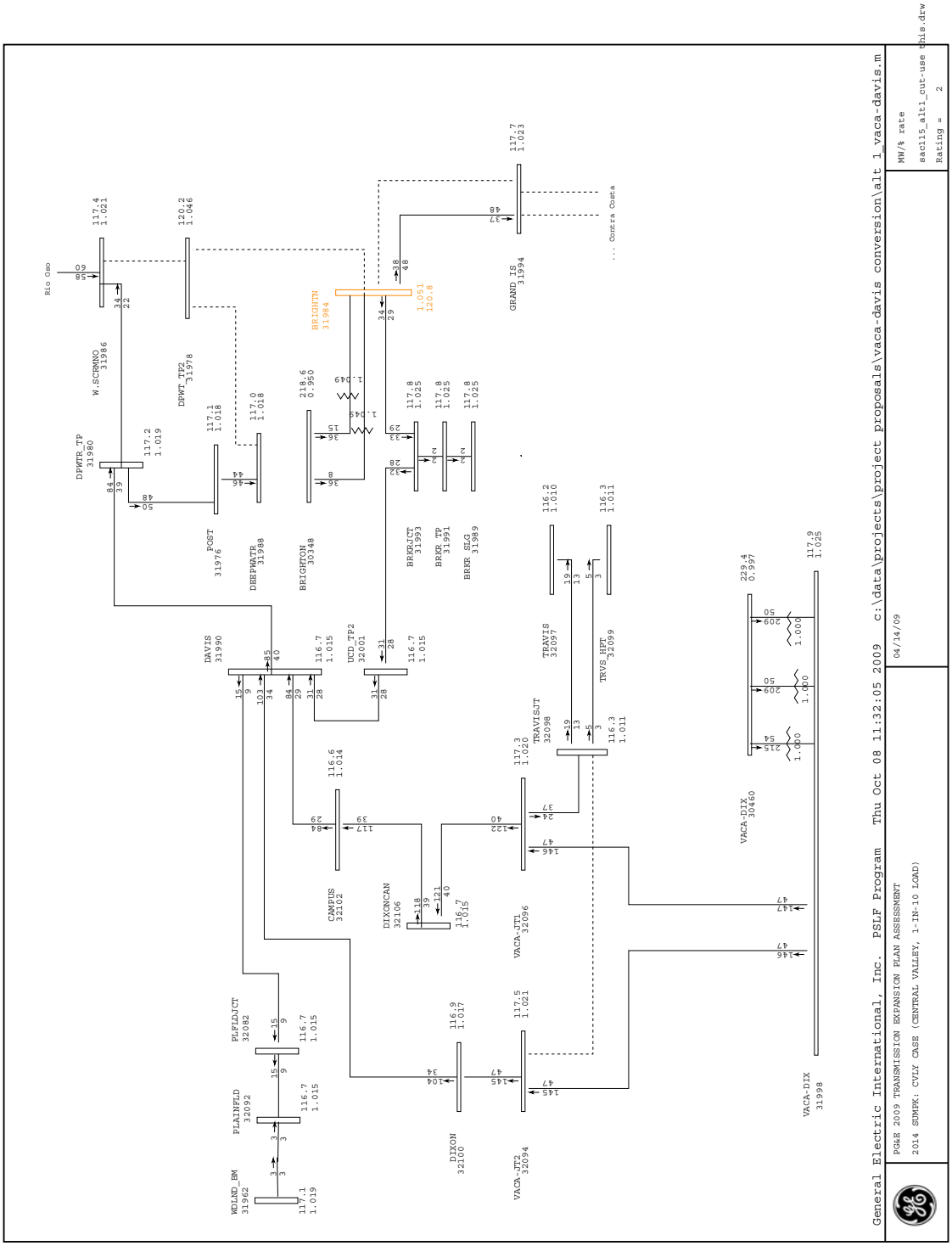

Figure 5-7: Post-Project – 2014 Loss of West Sacramento-Brighton 115 kV Line/Woodland Biomass Gen (L-1/G-1)

CHAPTER 6

Table of Contents

2015 Projects 3
Tesla – Weber 230 kV Line 4
Oakhurst 115 kV Tap Reinforcement 7
2016 Projects 9
Eight Mile Road-Tesla 230 kV Lines Reconductor 10
Exchequer-Yosemite 70 kV Line Reconductor 14
2018 18
South of Palermo 115 kV Project 19
2019 23
Atlantic – Placer Voltage Conversion 24
San Pablo/Point Pinole 115 kV Voltage Support 27
Gualala Reactive Support 31

2015 Projects

Tesla – Weber 230 kV Line

IN-SERVICE DATE

May 2015

PURPOSE AND BENEFIT

Reliability – NERC Compliance

PROJECT CLASSIFICATION

This is a new project.

DESCRIPTION AND SCOPE OF PROJECT

The project scope proposes to replace all the limiting equipment on the Tesla-Weber 230 kV Line so that the conductor becomes the limiting component on this line.

This project is expected to cost between $1M and $5M.

BACKGROUND

Weber Substation serves electric customers in San Joaquin County through the 60 kV system. The substation is primarily fed from the Tesla - Weber and Bellota - Weber 230 kV Lines. The Tesla-Weber 230 kV Line is consists of 23.6 miles of 954 ACSS conductor but is limited by other equipment on the line.

Planning analysis has identified that the Tesla – Weber 230 kV Line overloads by 12% in 2019 under normal conditions. Additionally, it overloads by 14% following an outage of the Bellota – Tesla 230 kV Line in 2019. Similarly, the Tesla – Weber 230 kV Line overloads by 19% following an outage of Collierville Generation Unit No. 1.

BASE CASE AND STUDY ASSUMPTIONS

PG&E used base cases and assumptions approved in the CAISO Unified Planning Assumptions and Study Plan for the 2009 Transmission Planning Process cycle.

STUDY CRITERIA

CAISO grid planning criteria
NERC Transmission Planning Reliability Standards

OTHER ALTERNATIVES CONSIDERED

Alternative 1: Status Quo

This alternative is not recommended because the thermal overloads are expected to exceed the emergency rating of the conductor.

PROJECT SCHEDULE

- Environmental and Permitting Processes – TBD
- Design – TBD
- Major Equipment – TBD
- Construction – TBD
- Operation Date – May 2015

KEY ISSUES

- Land-Use Restrictions – None
- Environmental Concerns – TBD
- Special Metering or Protection – TBD
- Common Mode Exposure Items – TBD
- Interaction with other Projects or Studies – None

ATTACHMENT

1. Scope Diagram

Attachment 1: Scope Diagram

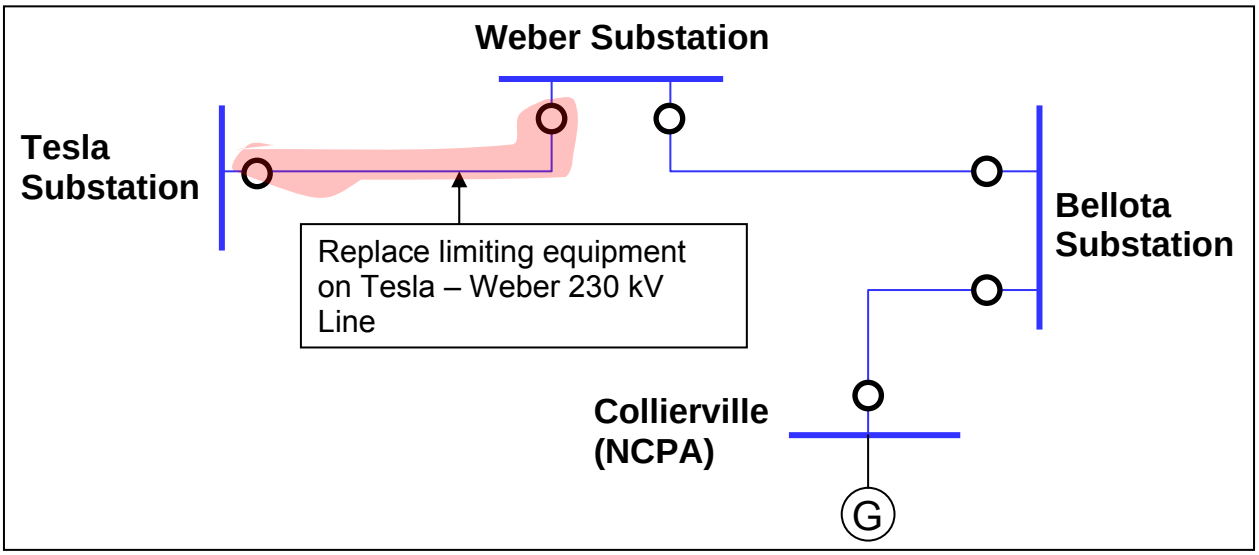

Figure 6-1: Scope Diagram

Oakhurst 115 kV Tap Reinforcement

IN-SERVICE DATE

May 2015

PURPOSE AND BENEFIT

Reliability – NERC compliance.

PROJECT CLASSIFICATION

This is a new conceptual project.

DESCRIPTION AND SCOPE OF PROJECT

The project scope is to convert the Wishon – Coppermine 70 kV Line and the Wishon – San Joaquin #3 70 kV Line to 115 kV. The scope also includes building a new 7 mile line to connect Oakhurst substation with San Joaquin Powerhouse #3, providing a second source for the Oakhurst and Coarsegold substations. To complete the loop, a 1.6 mile 115 kV Line will be constructed to connect Kerckhoff Powerhouse #2 to the converted Wishon – Coppermine 115 kV Line. The last part of this alternative is to reconductor approximately 18 miles of the Oakhurst 115 kV Tap with a conductor having a minimum rating of 690 Amps normal.

This alternative is expected to cost between $25M and $40M.

BACKGROUND

The Oakhurst 115 kV Tap is located in Madera County, within the Yosemite Division. This tap line provides 115 kV transmission power from Kerckhoff Powerhouse (24 MW) and Chowchilla Cogen (26 MW) to serve local area customers in the Oakhurst and Coarsegold area.

The Oakhurst 115 kV Tap serves two PG&E substations that include Coarsegold and Oakhurst. The 2010 projected peak load in these substations is 50 MW and is forecast to increase approximately 1.7 MW or 3.4% per year.

Planning analysis determined that the Oakhurst 115 kV Tap is projected to experience a normal overload of 9% in 2019.

BASE CASE AND STUDY ASSUMPTIONS

PG&E used base cases and assumptions approved in the CAISO Unified Planning Assumptions and Study Plan for the 2009 Transmission Planning Process cycle.

STUDY CRITERIA

CAISO grid planning criteria
NERC Transmission Planning Reliability Standards

ALTERNATIVES CONSIDERED

Alternative 1: Status Quo

This alternative is not recommended. This alternative does not address the potential overload issue.

Alternative 2: Reconductor the Oakhurst 115 kV Tap

This alternative proposes to reconductor approximately 18 miles of the Oakhurst 115 kV Tap with a higher rated conductor with a minimum rating of 690 Amps normal.

This alternative is expected to cost between $5M and $10M.

PROJECT SCHEDULE

- Environmental and Permitting Processes – TBD
- Design – TBD
- Major Equipment – TBD
- Construction – TBD

KEY ISSUES

- Land-Use Restrictions – TBD
- Environmental Concerns – TBD
- Special Metering or Protection - None
- Common Mode Exposure Items - None
- Interaction with other Projects or Studies – TBD

2016 Projects

Eight Mile Road-Tesla 230 kV Lines Reconductor

IN-SERVICE DATE

May 2016

PURPOSE AND BENEFIT

Reliability - NERC Compliance

PROJECT CLASSIFICATION

This is a new conceptual project.

DESCRIPTION AND SCOPE OF PROJECT

The project scope is to reconductor the Eight Mile Road-Tesla (27 circuit miles), Eight Mile Road-Stagg (7 circuit miles), and Stagg-Tesla (24 circuit miles) 230 kV Lines with 795 ACSS conductors or equivalent.

This alternative is expected to cost between $30M and $40M.

BACKGROUND

The Eight Mile Road-Tesla 230 kV transmission system serves electric customers in San Joaquin County. The power is delivered to Eight Mile Road, Stagg and Tesla Substations in the Stockton area. The power steps down from the 230 kV systems to the 21 kV (distribution) systems at Eight Mile Road, 60 kV systems at Stagg, and 115 kV systems at Tesla substations.

In the Stagg 60 kV system, the major load centers are Country Club, Hammer, Mosher, Stagg and the University of Pacific (UOP) substations in the North Stockton.

In the Tesla 115 kV system, the major load centers are Tracy, Lammers, Schulte, and Vierra substations.

In 2010, the Stockton area is projected to reach an electric peak of 1,385 MW. The City of Tracy and North Stockton has the highest projected growth for the division. The Stockton area is forecast to increase at a rate of 26 MW or 1.8% per year.

Planning analysis identified that by 2019 during an outage of either the Stagg-Tesla 230 kV Line or the Staff 230/60 kV Transformer Bank No. 2, the Eight Mile Road-Tesla 230 kV Line and the Eight Mile Road-Stagg 230 kV Line load up to 128% and 122% respectively. In addition, the Stagg-Tesla 230 kV Line loads to 116% in 2019 during an outage of the Eight Mile Road-Tesla 230 kV Line. As a short term measure for these potential overloads, PG&E plans to re-rate these lines. The increased ratings will mitigate the overloads on these lines over the next five to seven years.

BASE CASE AND STUDY ASSUMPTIONS

PG&E used base cases and assumptions approved in the CAISO Unified Planning Assumptions and Study Plan for the 2009 Transmission Planning Process cycle.

STUDY CRITERIA

CAISO grid planning criteria
NERC Transmission Planning Reliability Standards

OTHER ALTERNATIVES CONSIDERED

Alternative 1: Status Quo

This alternative is not recommended because it does not mitigate the expected capacity constraints.

Alternative 2: Add Third 230 kV Source at Stagg Substation

This alternative proposes to add a third 230 kV source to Stagg Substation from Tesla Substation. This alternative may not be feasible because of environmental and permitting concerns in the area.

This alternative is expected to cost between $20M and $30M.

PROJECT SCHEDULE

- Environmental and Permitting Processes – TBD
- Design – TBD
- Major Equipment – TBD
- Construction – TBD
- Operation Date – May 2016

KEY ISSUES

- Land-Use Restrictions – There are no land-use restrictions with this project. This project should qualify for a Notice of Construction exemption.
- Environmental Concerns – TBD
- Special Metering or Protection - None
- Common Mode Exposure Items – None
- Interaction with other Projects or Studies - None

ATTACHMENTS

1. Scope Diagram

Attachment 1: Scope Diagram

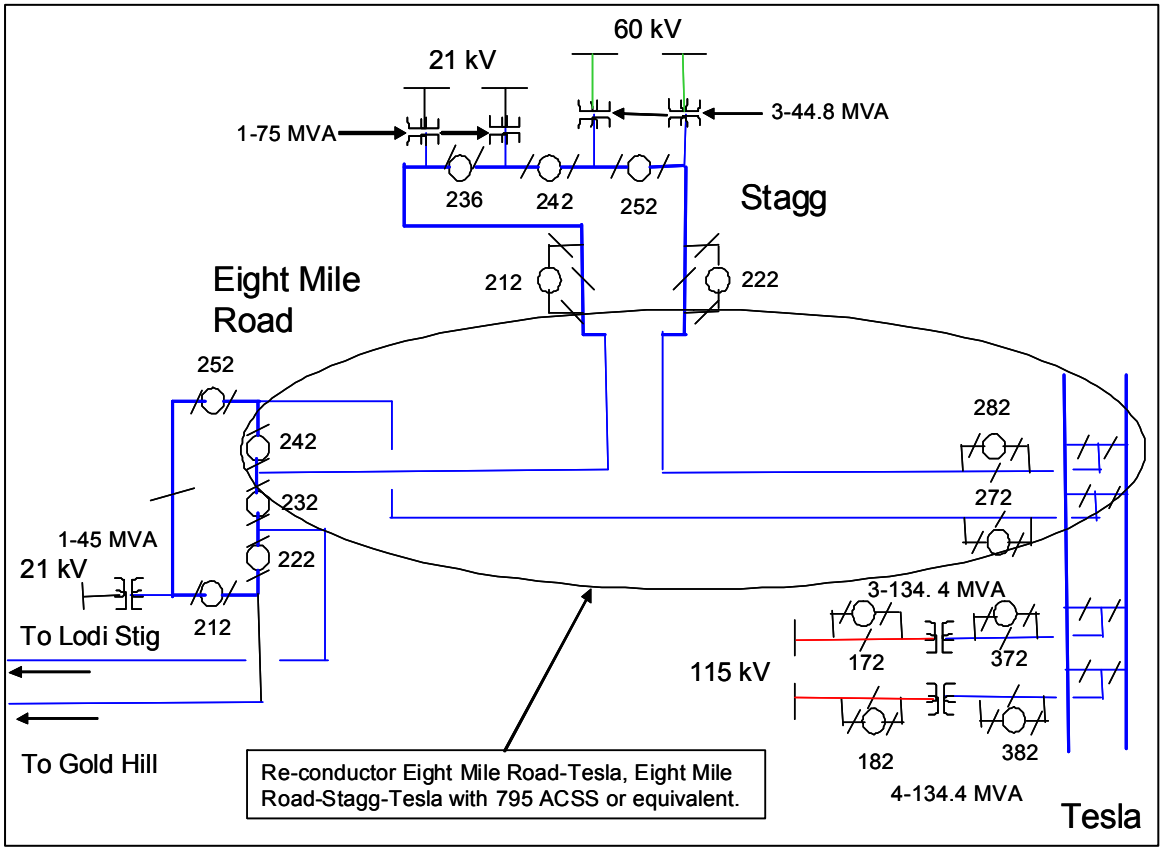

Figure 6-2: Scope Diagram

Exchequer-Yosemite 70 kV Line Reconductor

IN-SERVICE DATE

May 2016

PURPOSE AND BENEFIT

Reliability – NERC compliance.

PROJECT CLASSIFICATION

This is a new conceptual project.

DESCRIPTION AND SCOPE OF PROJECT

The project scope is to reconductor a total of 8.8 miles on the Exchequer - Yosemite 70 kV Line with a conductor rated to handle up to 440 Amps and 514 Amps under summer normal and summer emergency conditions respectively.

This project is expected to cost between $5M and $10M.

BACKGROUND

The Exchequer – Yosemite and Exchequer – Mariposa 70 kV Lines are located in Mariposa County, within the Yosemite Division. These lines provide 70 kV transmission power from MID's Exchequer Powerhouse (95 MW) to serve local area customers in the Mariposa area.

These two lines serve four PG&E substations that include Mariposa, Bear Valley, Indian Flat, and Yosemite. They also serve one customer-owned substation: Saxon Creek. The 2009 projected peak load in these substations is 29 MW and is forecast to increase approximately 0.7 MW or 2% per year.

The Exchequer – Bear Valley Jct. section of the Exchequer - Yosemite 70 kV Line is strung with 397.5 AAL (0.1 mile), #4/0 AAL (3 miles) and #1/0 CU (5.8 miles) conductors.

Planning analysis determined that loss of the Exchequer – Mariposa 70 kV Line is projected to overload the Exchequer – Bear Valley Jct. section of the Exchequer – Yosemite 70 kV Line by 7% in 2019.

BASE CASE AND STUDY ASSUMPTIONS

PG&E used base cases and assumptions approved in the CAISO Unified Planning Assumptions and Study Plan for the 2009 Transmission Planning Process cycle.

STUDY CRITERIA

CAISO grid planning criteria
NERC Transmission Planning Reliability Standards

OTHER ALTERNATIVES CONSIDERED

Alternative 1: Status Quo

This alternative is not recommended. This alternative does not address the potential overload issue.

Alternative 2: Re-rate the #1/0 CU Section of the Exchequer - Yosemite 70 kV Line

This alternative proposes to re-rate the Exchequer – Bear Valley Jct. section (#1/0 CU) of the Exchequer – Yosemite 70 kV Line for 4 feet per second (fps) wind speed at ratings of 291 Amps normal and 334 Amps emergency. The 4 fps ratings increase the current carrying capability by approximately 20%.

This alternative is expected to cost less than $1M.

PROJECT SCHEDULE

- Environmental and Permitting Processes – TBD
- Design – TBD
- Major Equipment – TBD
- Construction – TBD

KEY ISSUES

- Land-Use Restrictions – TBD
- Environmental Concerns – TBD
- Special Metering or Protection - None
- Common Mode Exposure Items - None
- Interaction with other Projects or Studies – None

GEPSLF MODELING INFORMATION

#Reconductors 8.8 miles with 397.5 AAC of the

```
#Exchequer-Yosemite 70 kV Line from Exchequer-Bear Valley
OLDSECDD  34232, 34242, CKT=1, SEC=1,+
        RPU=0.046515, XPU=0.13335, BPU=0.0024996,+
        MVA1=53, MVA2=62, MVA3=81, MVA4=86
```

ATTACHMENTS

1. Single Line Diagrams

Attachment 1: Scope Diagram

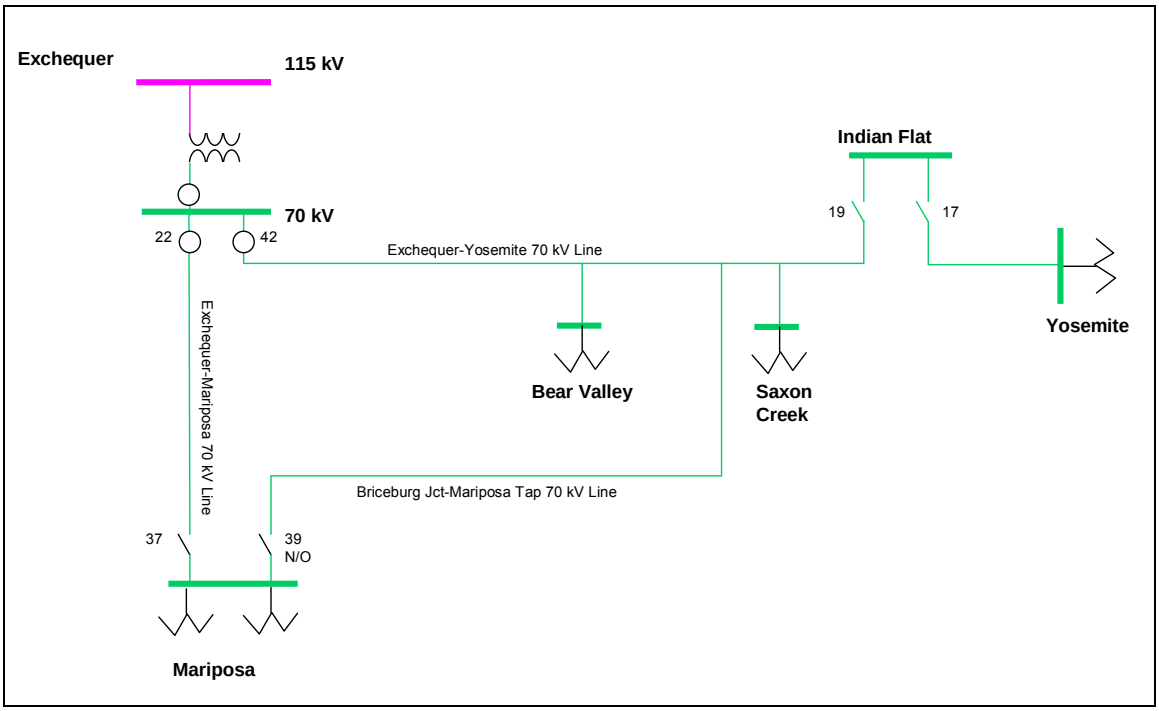

Figure 6-3: Scope Diagram

2018

South of Palermo 115 kV Project

TARGETED IN-SERVICE DATE

May 2018

PURPOSE AND BENEFIT

Reliability – NERC Compliance

PROJECT CLASSIFICATION

This is a new conceptual project.

DESCRIPTION OF PROPOSED PROJECT

The project scope is to reconductor the southern portions of the Palermo – Rio Oso Nos. 1 and 2 115 kV Lines or construct new transmission lines. This project proposes to reconductor the following lines with 477 ACSS conductors:

1. Bogue – Rio Oso 115 kV Line (21.5 miles),
2. Palermo – Bogue 115 kV Line (8 miles) between Olivehurst and Bogue substations,
3. Palermo – Pease 115 kV Line (26.5 miles),
4. Pease – Rio Oso 115 kV Line (28 miles), and
5. Rio Oso – Nicolaus 115 kV Line (5.5 miles).

The project is expected to cost between $50M and $60M. The large cost range is due to the unknown permitting and environmental aspects of the project.

BACKGROUND

There are three Palermo – Rio Oso 115 kV lines located in the Yuba and Sutter counties. They range in length from 46 to 57 miles. These lines provide transmission power to the Honcut, Pease, East Marysville, Olivehurst, Bogue and East Nicolaus distribution substations.

In addition to providing 115 kV transmission power to local area electric customers, the Palermo – Rio Oso 115 kV lines also serve as a transmission path for bulk transmission power to travel. A large amount of this bulk transmission power is from nearby hydro generating facilities. There are several hydro power plants in the area, particularly along Feather River between Lake Almanor and Lake Oroville. Most of these plants are

interconnected onto Table Mountain, Palermo and Rio Oso substations. A portion of the output from these power plants, going through the Table Mountain Substation, are then transported to load centers in the Sacramento area through the Palermo – Rio Oso 115 kV lines.

Planning analysis concluded that during 2019 summer peak conditions, the Pease - Rio Oso and Bogue - Rio Oso 115 kV Lines overload by 25% and 4% respectively under normal conditions. In addition, there are several Category B and C contingencies that would overload the Pease – Rio Oso and Palermo – Pease 115 kV Lines during Summer peak conditions. In the interim, PG&E plans to transfer the Olivehurst Substation load to the Palermo – Bogue 115 kV Line as necessary to mitigate any potential normal or emergency overloads on these lines. In the long term, this proposed project would mitigate all overloading concerns.

BASE CASE AND STUDY ASSUMPTIONS

PG&E used base cases and assumptions approved in the CAISO Unified Planning Assumptions and Study Plan for the 2009 Transmission Planning Process cycle.

STUDY CRITERIA

CAISO grid planning criteria
NERC Transmission Planning Reliability Standards

OTHER ALTERNATIVES CONSIDERED

Alternative 1: Status Quo

This alternative is not recommended. This alternative does not address the projected capacity issues.

Alternative 2: Build a new Palermo-Rio Oso 115 kV Line

The proposed new line would be sized with 715 Al conductors and measure approximately 45 to 55 miles long. This alternative would also require Honcut Substation be normally fed from the Palermo-Pease 115 kV Line (normally open Switch 445 and normally close Switch 435 at the Honcut Junction) and transferring the alternate fed to East Marysville Substation from the Palermo - Nicolaus 115 kV Line to the new Palermo-Rio Oso 115 kV Line.

This alternative is expected to cost between $70 million and $100 million. This alternative is not recommended because of significant uncertainties in transmission line permitting requirements and its high cost.

PROJECT SCHEDULE

- Environmental and Permitting Processes - TBD
- Design – TBD
- Major Equipment – TBD
- Construction – TBD
- Operation Date – May 2018

KEY ISSUES

- Land-Use Restrictions – TBD
- Environmental Concerns – TBD
- Special Metering or Protection - TBD
- Common Mode Exposure Items – None
- Interaction with other Projects or Studies – T1002: Bogue Reconfiguration

ATTACHMENTS

1. Scope Diagram

Attachment 1: Scope Diagram

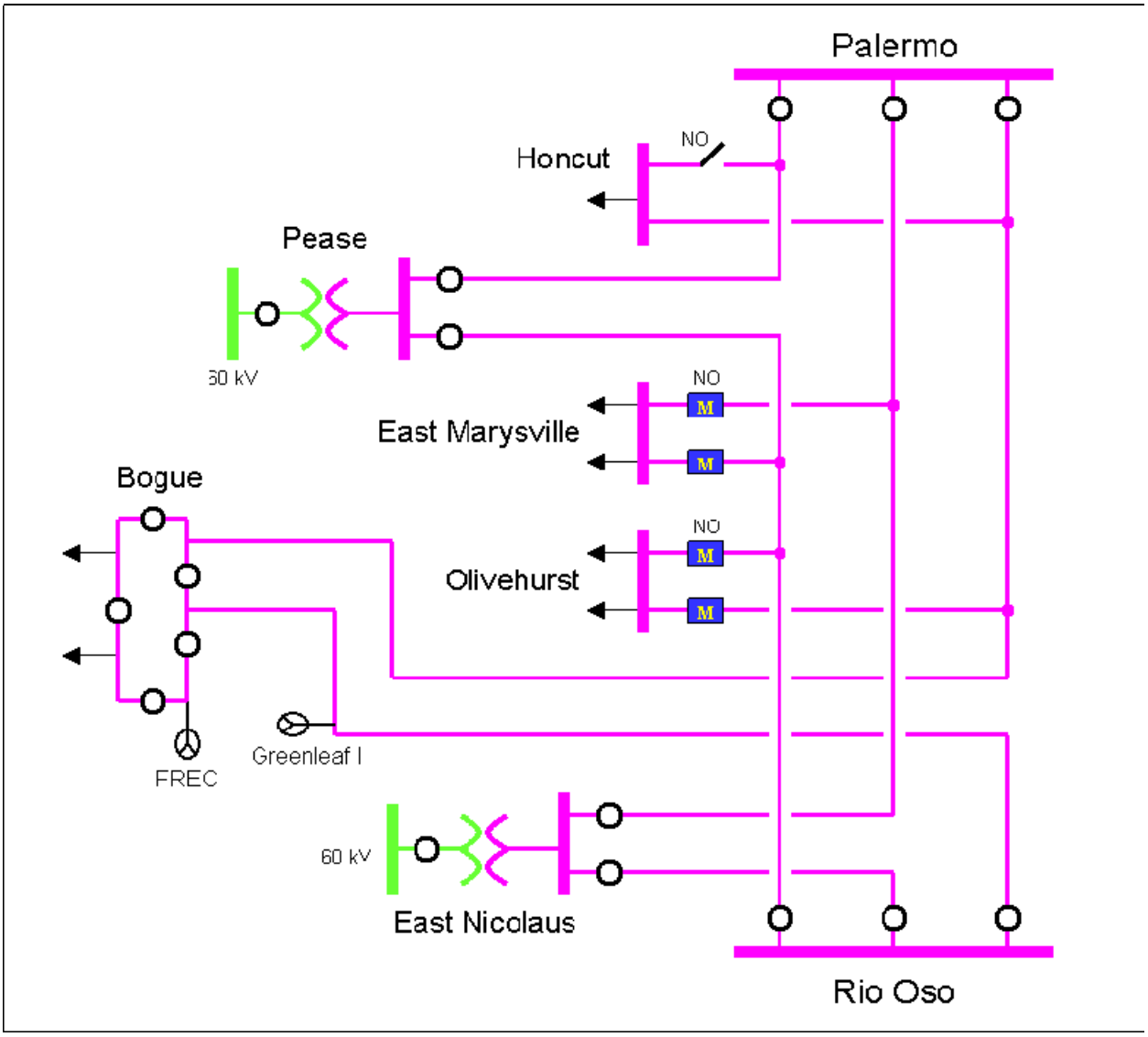

Figure 6-4: Scope Diagram

2019

Atlantic – Placer Voltage Conversion

TARGETED IN-SERVICE DATE

May 2019

PURPOSE AND BENEFIT

Reliability – NERC Compliance

PROJECT CLASSIFICATION

This is a new conceptual project.

DESCRIPTION AND SCOPE OF PROJECT

The project scope is to convert the Atlantic – Placer 60 kV system for 115 kV operation.

This project is expected to cost between $50M and $60M. The large cost range is due to the unknown permitting and environmental aspects of the project.

BACKGROUND

Electric customers located between Atlantic and Placer substations in Placer County are served by a network of 60 kV transmission lines. Currently, there is one 60 kV line from Atlantic to Placer and a second 60 kV line between Atlantic and Del Mar substations.

Planning analysis concluded that the Placer 115/60 kV Transformer No. 1 would reach its capacity as electric demand continues to grow. This project would convert the 60 kV transmission lines and substation facilities to 115 kV. The completion of this project would provided the needed capacity to meet future growth, increase service reliability and reduce the loading on the Placer – Gold Hill and Drum-Bell 115 kV Lines.

BASE CASE AND STUDY ASSUMPTIONS

PG&E used base cases and assumptions approved in the CAISO United Planning Assumptions and Study Plan for the Transmission Planning process cycle.

STUDY CRITERIA

CAISO grid planning criteria
NERC Transmission Planning Reliability Standards

OTHER ALTERNATIVES CONSIDERED

Alternative 1: Status Quo

This alternative is not recommended. This alternative does not address the potential overload issue.

PROJECT SCHEDULE

- Environmental and Permitting Processes – TBD
- Design – TBD
- Major Equipment – TBD
- Construction – TBD
- Operation Date – May 2019 or earlier

KEY ISSUES

- Land-Use Restrictions – TBD
- Environmental Concerns – TBD
- Special Metering or Protection – TBD
- Common Mode Exposure Items – TBD
- Interaction with other Projects or Studies – TBD

ATTACHMENTS

1. Scope Diagram

Attachment 1: Scope Diagram

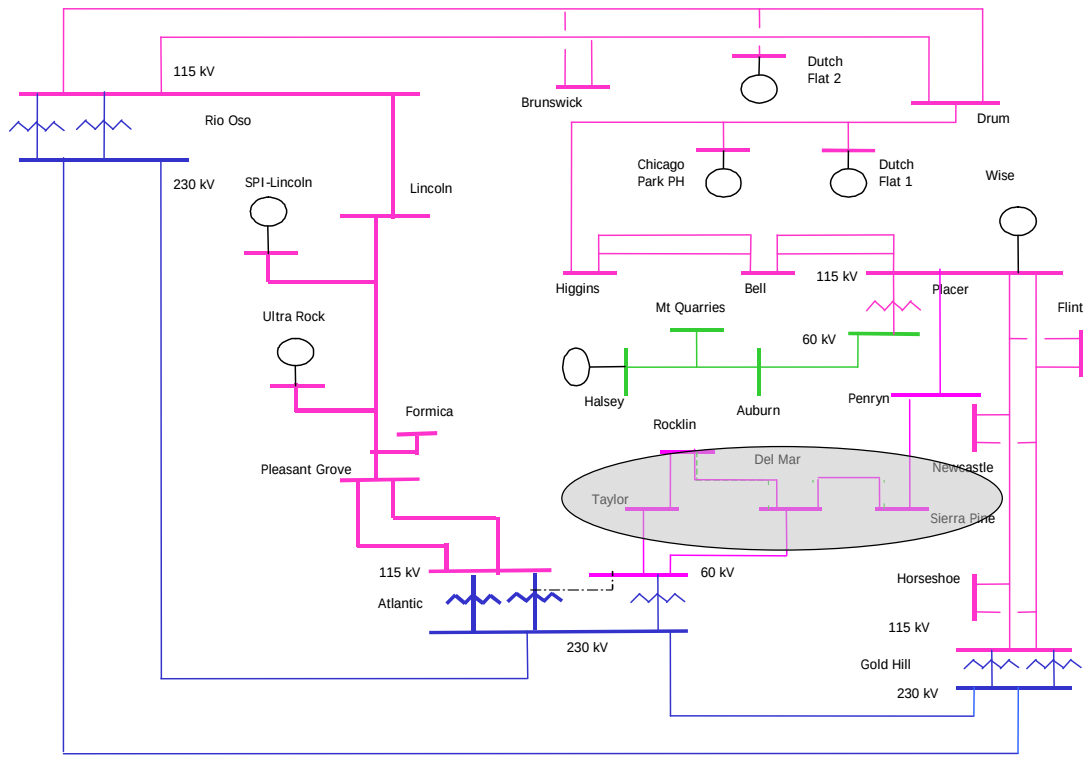

Atlantic – Placer Long Term Plan

Figure 6-5: Scope Diagram

San Pablo/Point Pinole 115 kV Voltage Support

TARGETED IN-SERVICE DATE

May 2019

PURPOSE AND BENEFIT

Reliability – NERC Compliance

PROJECT CLASSIFICATION

This is a new conceptual project.

DESCRIPTION AND SCOPE OF PROJECT

The project scope is to install additional voltage support devices or to construct a new 115 kV facility into the San Pablo Area.

This project is expected to cost between $10M and $20M.

BACKGROUND

San Pablo and Point Pinole Substations serves electric customers in the City of San Pablo and Point Pinole located within Contra Costa County. The Sobrante-Standard Oil SWG STA Nos. 1 and 2 115 kV Line are critical import lines that provide power to roughly 7,000 customers in the area.

Chevron, the largest transmission customer in the area which could reach a total peak load of roughly 140 MW, owns the Standard Oil 115 kV Substation which is connected at the very end of the Sobrante-Standard Oil SWG STA Nos. 1 and 2 115 kV Line. In addition, Chevron owns and operates a set of generators connected to their Standard Oil 115 kV Substation. Total generation output from their co-gens is roughly 110MW. Planning studies for 2019 show that an overlapping outage of either the Sobrante-Standard Oil SWG STA Nos. 1 or 2 115 kV Line overlapped with one of the Chevron co-gens could cause low voltage concerns at San Pablo and Point Pinole 115 kV Substation.

Planning studies for 2019 indicates that if shunt capacitors or a new line is constructed in the area, the substations in the area would no longer experience any voltage concerns caused by an overlapping outage of either the Sobrante-Standard Oil SWG STA Nos. 1 or 2 115 kV Line with one of the Chevron co-gen.

BASE CASE AND STUDY ASSUMPTIONS

PG&E used base cases and assumptions approved in the CAISO Unified Planning Assumptions and Study Plan for the 2009 Transmission Planning Process cycle.

STUDY CRITERIA

CAISO grid planning criteria
NERC Transmission Planning Reliability Standards

OTHER ALTERNATIVES CONSIDERED

Alternative 1: Status Quo

This alternative is not recommended. This alternative does not address the potential overload issue.

PROJECT SCHEDULE

- Environmental and Permitting Processes – TBD
- Design – TBD
- Major Equipment – TBD
- Construction – TBD
- Operation Date – May 2019

KEY ISSUES

- Land-Use Restrictions – TBD
- Environmental Concerns – TBD
- Special Metering or Protection – TBD
- Common Mode Exposure Items – TBD
- Interaction with other Projects – TBD

GEPSLF MODELLING INFORMATION

```
# This change file will be used to insert shunt capacitors at San Pablo Substation
# The shunt caps will model 2 step with 50 MVAR/step with a total output of 100 MVAR
#
NEWSVD   32758 ID=1 ST=4 TYPE=1 VBAND=0.02 REMOTE_BUS=32758, BINIT=0  N0=2 B0=0.5 +
AREA=7, ZONE=307 OWN=390
# END
```

MISCELLANEOUS DATA

- PG&E will construct, own, and finance the project
- PG&E will be the planned operator of the project

ATTACHMENTS

1. Scope Diagram

Attachment 1: Scope Diagram

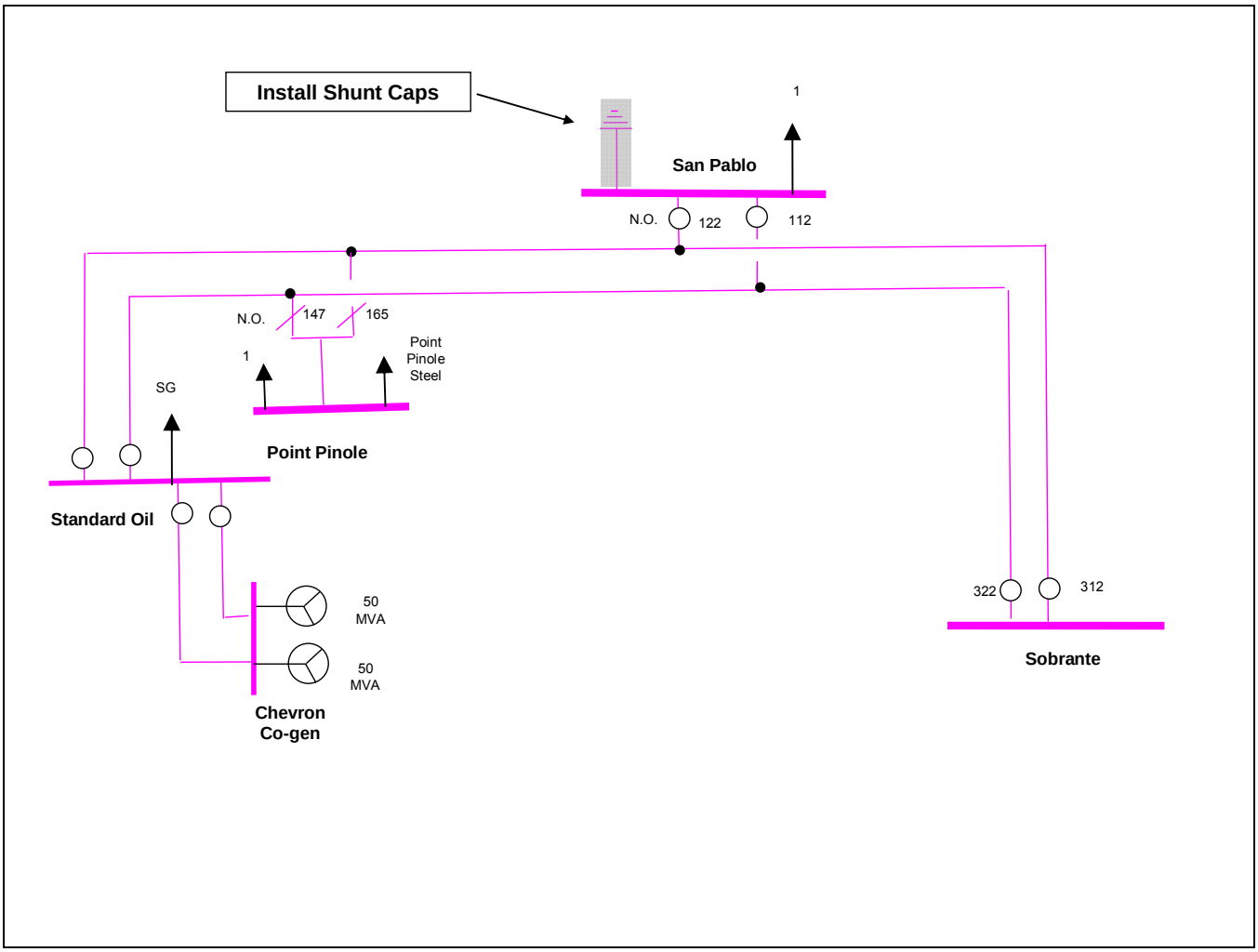

Figure 6-6: Scope Diagram

Gualala Reactive Support

IN-SERVICE DATE

May 2019

PURPOSE AND BENEFIT

Reliability - NERC Compliance

PROJECT CLASSIFICATION

This is a new conceptual project.

DESCRIPTION AND SCOPE OF PROJECT

The project scope is to install a 10 MVAR reactive support device at Gualala Substation.

This alternative is expected to cost between $1M and $5M.

BACKGROUND

Electric customers along the Sonoma Coast are served by Pacific Gas and Electric Company's 60 kV transmission lines and distribution substations. The distribution substations serving the Sonoma Coast are Annapolis, Fort Ross, Salmon Creek and Gualala. These substations normally receive electric transmission service from Fulton substation by the way of the long Monte Rio-Gualala 60 kV line. These substations also have a back-tie connection to the Elk – Gualala 60 kV Line but the two lines have to be operated separately because the Elk – Gualala 60 kV Line which originates from Mendocino Substation in Mendocino County cannot support the load in the area, particularly at Gualala which is projected to be 9.2 MW in 2019.

Planning studies have determined that under projected winter peak conditions, the voltages at Gualala, Annapolis, Fort Ross, and Salmon Creek Substations along the Monte Rio – Gualala 60 kV Line could potentially drop to as low as 88% of the nominal voltage.

BASE CASE AND STUDY ASSUMPTIONS

PG&E used base cases and assumptions approved in the CAISO Unified Planning Assumptions and Study Plan for the 2009 Transmission Planning Process cycle.

STUDY CRITERIA

CAISO grid planning criteria
NERC Transmission Planning Reliability Standards

OTHER ALTERNATIVES CONSIDERED

Alternative 1: Status Quo

This alternative is not recommended because it does not mitigate the expected capacity constraints.

PROJECT SCHEDULE

- Environmental and Permitting Processes – TBD
- Design – TBD
- Major Equipment – TBD
- Construction – TBD
- Operation Date – May 2019

KEY ISSUES

- Land-Use Restrictions – There are no land-use restrictions with this project.
- Environmental Concerns – TBD
- Special Metering or Protection - TBD
- Common Mode Exposure Items – None
- Interaction with other Projects or Studies - None

ATTACHMENTS

1. Scope Diagram

Attachment 1: Scope Diagram

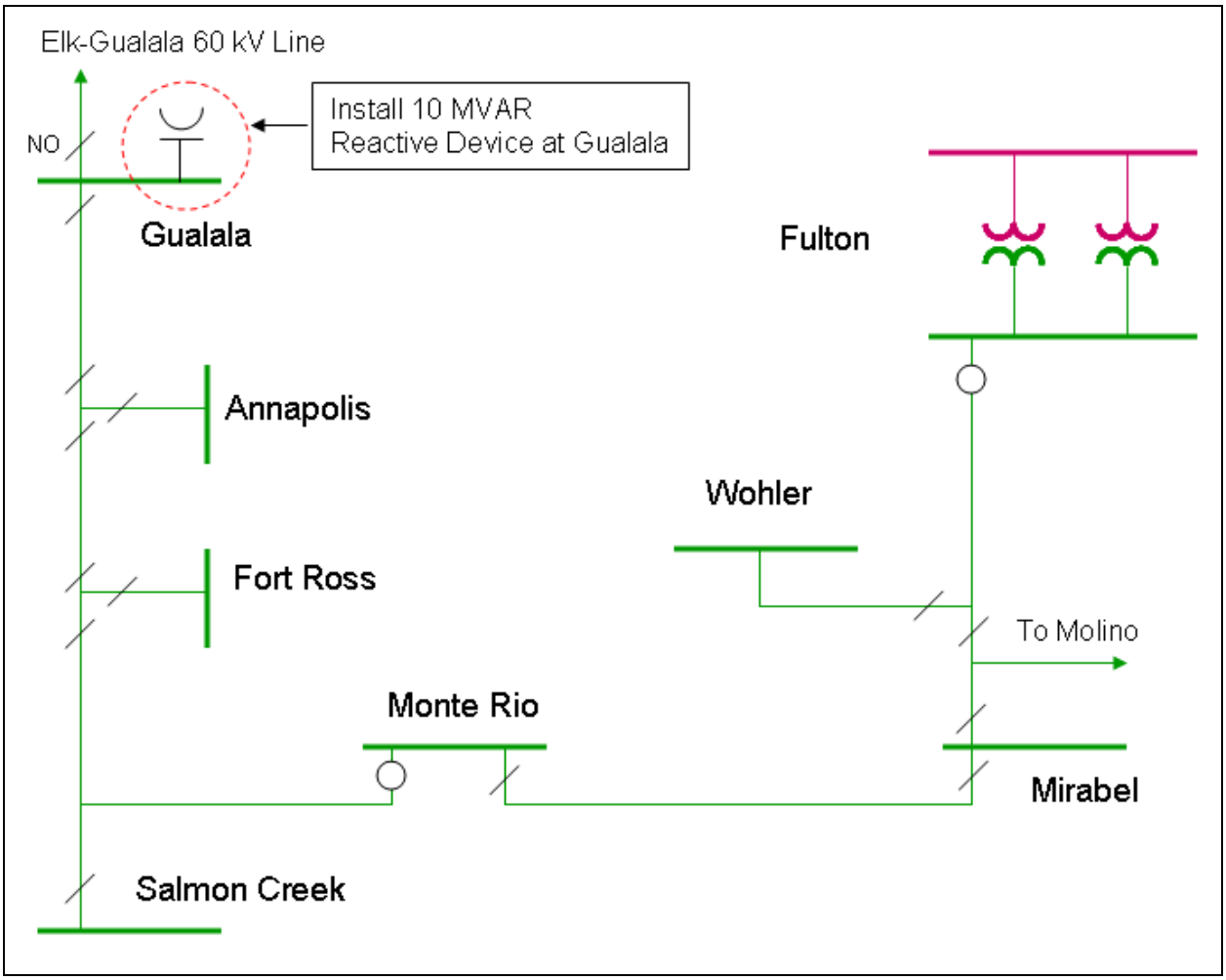

Figure 6-7: Scope Diagram

CHAPTER 7

Table of Contents

Page

Transmission Access to Renewables **3**
The California Transmission Planning Group 3
Conceptual 500 kV Transmission Projects **4**
Midway – Kramer 500 kV #1 and #2 Transmission line: 2
Midway-Antelope 500 KV Transmission Line: 2
Midway-Gregg 500 KV Transmission Line Project: 2
Gregg-Bellota 500 kV #1 and #2 Transmission Line 2
Malin-Cottonwood-Table Mountain and Table Mountain-Tesla 500 kV Transmission Lines: 2
Canada/Pacific Northwest – Northern California Transmission Project 3
Bay Area Bulk Transmission Project 5
Central California Clean Energy Transmission Project 6

Transmission Access to Renewables

There are a number of areas in California and in the WECC region with resources that could potentially enable California to meet its resource needs and also enable PG&E to meet its Renewable Portfolio Standard (RPS) goal in the future.

This Chapter discusses some of the recent activities that PG&E is pursuing in meeting its long-term procurement goals to achieve California's renewable energy targets of 33% by 2020. It should be noted that both the projected renewable resource scenarios and the described regional transmission projects are at the conceptual studying stage. As such, no conclusion can be drawn as to the specific projects that would ultimately be pursued or their timing.

Recently a number of studies have already been (or are being) conducted in California and throughout WECC: For example, the Intermittency Analysis Project in the California Energy Commission's PIER Program, the Tehachapi Collaborative Study conducted under the direction of the California Public Utilities Commission and later at the CAISO, Canada/Pacific Northwest – Northern California Transmission Study, the Central California Clean Energy Transmission Project (formerly Midway – Gregg 500 kV Transmission Project), and the CAISO Renewables Integration Study, the California Energy Commission's (CEC's) Regional Integration of Renewables (RIR) for Northern California Study[1], and the Renewable Energy Transmission Initiative (RETI)[2] in particular.

The California Transmission Planning Group

Most recently, the California Transmission Planning Group (CTPG) was formed to provide a forum for conducting joint transmission planning and coordination in transmission activities to meet the needs of California consistent with FERC Order 890.

The CTPG was formed as a result of discussions facilitated by FERC to address California's transmission needs in a coordinated manner that would respect various business models. PG&E is part of the CTPG, which includes transmission owners with an obligation to serve and transmission operators, and these parties have the technical capability to perform detailed transmission planning.

CTPG is committed to developing a California state-wide transmission plan to meet the state's 33% by 2020 renewable portfolio standard (RPS) goal. This transmission plan will seek to leverage a diverse portfolio of renewable energy generation technologies (wind, geothermal, hydro, biomass and solar) available to supply projected electricity demand in California from now to beyond 2020. In this effort CTPG is utilizing the Renewable Energy Transmission Initiative (RETI) conceptual plan as a starting point.

The CTPG adheres to the following general principles:

[1] http://www.pge.com/RIR
[2] http://www.energy.ca.gov/reti/index.html

- Initiate planning coordination among CAISO, POUs and IOUs to take advantage of planning windows for the development of transmission plan for California.
- Develop and implement cost-effective transmission system expansions to promote transmission reliability, efficiency, and accessibility on a voluntary basis and without pre-established institutional requirements that any expansions or upgrades be operated or controlled by a specific balancing authority or under any specific contract or tariff arrangement.
- Perform studies to evaluate the reliability impacts, costs and benefits of proposed transmission projects.
- Create plans that adhere to NERC and WECC reliability standards.
- Implement and adhere to the nine FERC Order 890 planning principles.
- Support State Policy.

PG&E intends to develop the transmission plans for its renewable resources in conjunction with the CTPG efforts.

The CTPG Study Plan and the Phase 1 Study Report can be found in http://www.ctpg.us/public/index.php. Effort is under way to develop the Phase 2 Study Plan. A number of renewable resource scenarios are being developed.

Conceptual 500 kV Transmission Projects

To meet project load growth, continued investments in transmission infrastructure will be needed to bring future resources to safely and reliably serve the forecasted customer loads. Future transmission plans would depend in part on projections of future resource development. The Global Warming Solutions Act of 2006, Assembly Bill 32 sets an economy-wide cap on California greenhouse gas emissions at 1990 levels by no later than 2020. This is an aggressive goal that represents approximately an 11 percent reduction from current emissions levels and nearly a 30 percent reduction from projected business-as-usual levels in 2020. In addition, on November 17, 2008, Governor Arnold Schwarzenegger signed Executive Order S-14-08 requiring that California utilities reach the 33% renewables goal by 2020. Both developments would significantly impact the development and acquisition of resources by various entities, and thus, long-term transmission plan.

While the uncertainty in locations, amounts and types of future renewable resources introduce much uncertainty in any transmission plan, it would be prudent to investigate the potential transmission plans should it becomes necessary to deliver these renewable resource to the load centers. Because of the magnitude of the expected renewable resources and the need to allow for the shut-down of once-through cooling generators as well as to supply load growth, the conceptual transmission plans would likely need to include 500 kV transmission projects.

Leverage off the information being developed in these various forums such as CTPG, RETI and RIR , PG&E is investigating a number of transmission projects. A number of these conceptual transmission projects are included below and are shown in the figure below:

Potential PG&E Transmission Upgrades for Renewable Generation

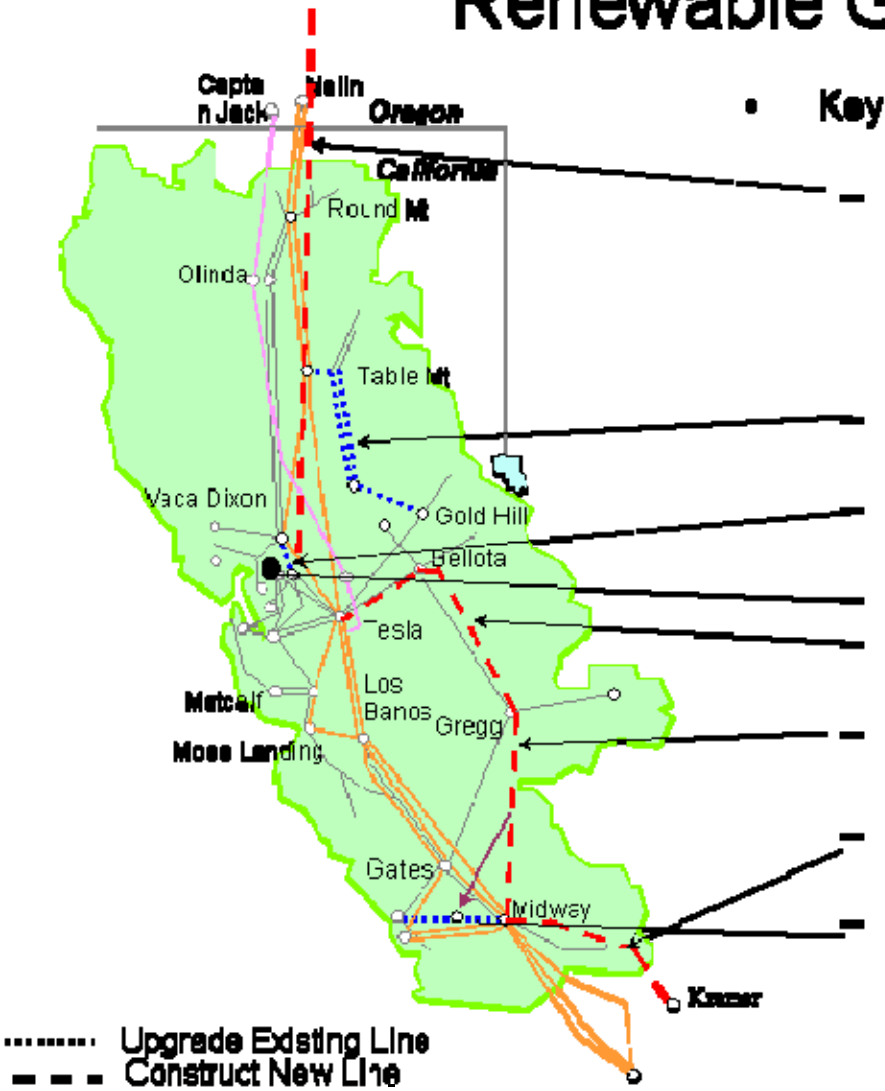

- Key projects to facilitate renewable generation
  - Canada-Pacific NW-N CA
  - Upgraded 230 kV & 115 kV system between Table Mt. – Rio Oso – Gold Hill
  - Upgrade 230 kV between Vaca Dixon – Contra Costa
  - Collinsville Substation
  - Gregg-Bellota-Tesla 500 kV line project($750M-$1B)
  - Midway-Gregg 500 kV line
  - Midway-Kramer 500 kV Lines project
  - Upgrade 230 kV between San Luis Obispo Solar – Midway

Midway – Kramer 500 kV #1 and #2 Transmission line:

- Two 500 kV line terminations at Midway substation in central California.
- Two 500 kV transmission lines from Midway substation to Kramer substation- approximately 170 mile.
- Two 500 kV line terminations at Kramer substation in southern California

Midway-Antelope 500 KV Transmission Line:

- 500 KV termination at Antelope substation in southern California.
- 500 kV transmission line from Midway substation to Antelope substation approximately 125 mile.
- 500 KV line termination at Midway substation.

Midway-Gregg 500 KV Transmission Line Project[3]:

- Two 500 kV line termination at Midway substation in Central California
- Two 500 kV transmission line from Midway substation-Gregg substation approximately 140 - 170 miles
- Two 500 kV line termination at Gregg substation in central California

Gregg-Bellota-Tesla 500 kV #1 and #2 Transmission Line[4]

- Two500 kV line termination at Gregg substation in central California.
- Two 500 kV transmission lines from Gregg substation to Bellota substation or other substation in the vicinity- approximately 125mile.
- Two 500 kV line transmission from Bellota substation (or other substation in the vicinity) to Tesla Substation – approximately 50 – 70 miles
- Two 500 kV line terminations at Tesla substation

Malin-Cottonwood-Table Mountain and Table Mountain-Tesla 500 kV Transmission Lines:

- 500 KV termination at Malin Substation in Southern Oregon, Cottonwood and Table Mountain substations in northern California
- 500 kV transmission line from Malin to Cottonwood to Table Mountain substation- approximately 250 mile.

---

[3] This is one of the alternatives of the Central California Clean Energy Transmission Project (see http://www.caiso.com/1f42/1f42daf7415e0.html.

[4] This project, together with Midway-Gregg 500 kV Transmission Line Project, will form the Midway – Tesla 500 kV Transmission Line Project.

- 500 kV line from Table Mountain to Tesla/Tracy in the Central Valley area - approximately 150 miles.
- Termination of Table Mountain-Tesla 500 kV line at either the Tesla/Tracy 500 kV substation in the central Valley. In northern California

Canada/Pacific Northwest – Northern California Transmission Project

In August 2006, PG&E initiated a WECC Regional Planning Project Review for the Canada/Pacific Northwest – Northern California (CNC) transmission project. The project has a target north-to-south rating of 3000 MW and an operating date of December 2016. The Project is sponsored by Avista Corporation, British Columbia Transmission Corporation, PacifiCorp, and PG&E (Project Sponsors).

This proposed line has three key objectives. First, it would provide California with access to significant incremental renewable resources in British Columbia and the Pacific Northwest. Second, it would improve regional transmission reliability. Third, the project could provide other market participants with beneficial opportunities to use the facilities.

In November 2007, the Project Sponsors completed the WECC regional planning process[5] for the project, and submitted the Regional Planning Project Report to WECC. On December 1, 2008 WECC notified the Project Sponsors the approval of the Regional Planning Review Report. A copy of the report is posted on the project website www.pge.com/canada. Studies conducted during regional planning resulted in a conceptual Plan of Service (POS) involving the construction of AC facilities from Selkirk Substation (southeastern British Columbia) to northern Oregon; DC facilities from there to Collinsville (San Francisco Bay Area); and AC facilities from there to Tracy - - a total distance of about 1000 miles. This POS would best achieve the above objectives.

In October 2007, the Project Sponsors initiated the WECC Phase 1 rating process. The conceptual transmission plan for the study is shown in Figure 7.1.

Since then the Project Sponsors have been engaged in analyzing a number of alternative plans of service for the project and have taken into account the development of seven other transmission projects in the Pacific Northwest with planned operating dates in the 2010-2015 period. This coordination was accomplished through the Transmission Coordination Work Group (TCWG) formed by the developers of these eight projects: Avista Corp, Bonneville Power Administration, British Columbia Transmission Corporation, Idaho Power Company, PacifiCorp, Pacific Gas and Electric Company, Portland General Electric, Sea Breeze Pacific-RTS and TransCanada. The TCWG has been successful in identifying the technical benefits of the alternative plans of service. See http://www.nwpp.org/tcwg/.

---

[5] In November 2008, the WECC Planning Coordination Committee (PCC) approved the report and notified PG&E that the Regional Planning Project Review was complete. The approval time was unusually lengthy because the report inadvertently was not distributed to PCC and the WECC Technical Studies Subcommittee for review until September 2008.

Based on the technical study results and the implementation cost of the various plans of service, an Initial POS was selected for the CNC project and was used as a starting point for establishishing a WECC Phase 1 rating.

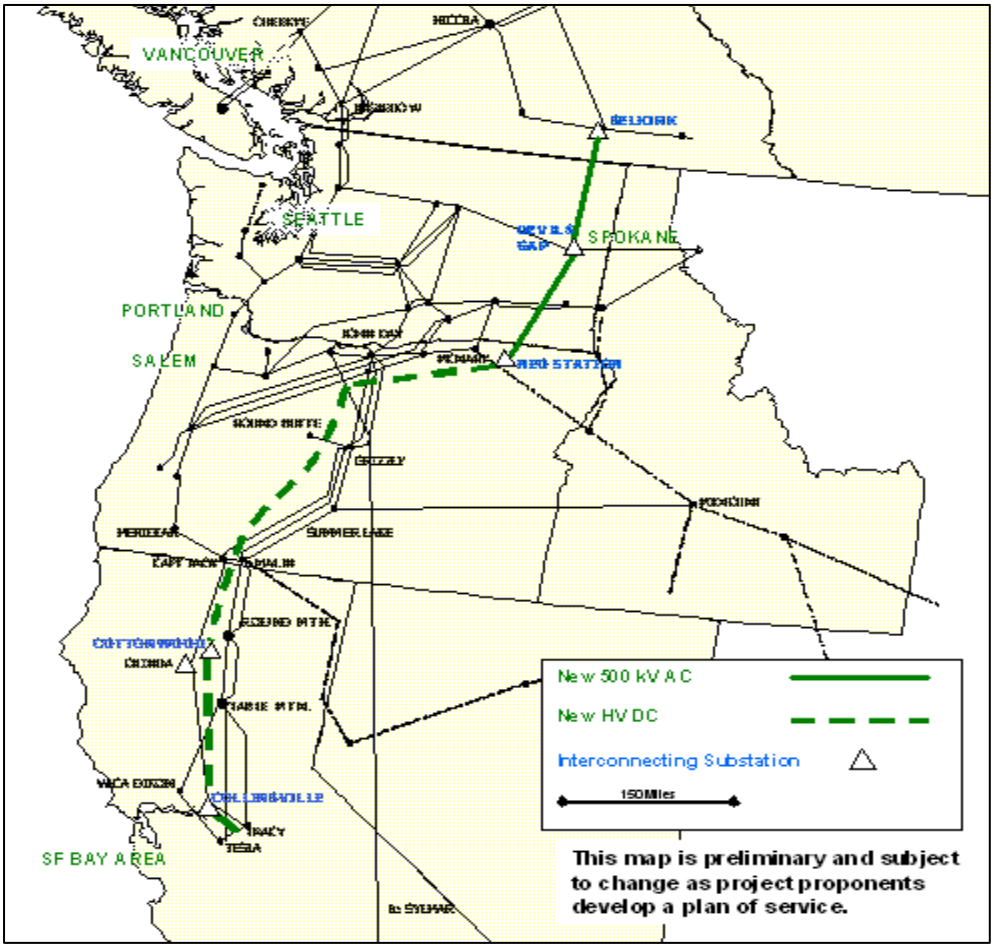

Figure 7-1: Proposed conceptual transmission plan for WECC Phase 1 Rating Process

The CNC Project involves the construction of approximately 1000 miles of HVAC and HVDC transmission lines from British Columbia to Northern California and interconnects with five or six existing and proposed substations. The Initial POS for the project is as follows:

a) A series compensated (up to 70%) 500 kV HVAC Double Circuit Tower Line (DCTL) from Selkirk Substation in the southeast British Columbia to Devil's Gap near Spokane, Washington and then to the proposed Northeast Oregon (NEO) Station and string 4-conductor bundled 666 kcmil ACSR.
b) A 3000 MVA, 500 kV HVAC to +/-500 kV HVDC Converter at the NEO Station.

c) A +/-500 kV HVDC line from the NEO Station to the proposed Collinsville Substation in the San Francisco Bay Area and string 3-conductor bundle 1272 kcmil ACSR.
d) A 3000 MVA, 500 kV HVAC to +/-500 kV HVDC Converter at Collinsville Substation.
e) A 500 kV Single Circuit Tower Line from Collinsville Substation to Tracy 2 Substation and string 2- conductor bundle 2300 aluminum
f) +/- 600 MVAR Static Var Compensators at each of the interconnection substations: Selkirk, Devil's Gap, Neo Station, Collinsville, Tracy and Cottonwood Area (if installed).
g) A remedial action scheme (RAS) to trip incremental resources scheduled on the CNC Project for outages of the project facilities. The outages for which such generation tripping or additional system element switching is required and the magnitude of that tripping will be determined in the WECC Phase 1 Comprehensive Progress Report.

Possible Third Terminal

h) A possible third HVDC terminal may be installed in the Cottonwood area in northern California and would consist of a 1000 -1500 MVA, 500 kV HVAC to +/- 500 kV HVDC Converter. This potential third HVDC terminal could be installed at the same time as or after part of or after the CNC Project is operation.

The Project Sponsors submitted the Comprehensive Progress Report for the WECC Phase 1 north-south rating study to WECC in December 2008. WECC granted the project the Phase 1 rating in March 2009 and shortly thereafter the project sponsors initiated the WECC Phase 2 rating process for the north-to-south rating of the project.

The WECC Phase 1 rating process to establish a south-to-north rating for the project will be initiated in January 2009 and plan to be completed in 2010.

Bay Area Bulk Transmission Project

The Greater San Francisco Bay Area (GBA) long–term planning study is being conducted to determine what future combination of transmission system reinforcements and/or generation resources are required to serve the projected load levels within this area reliably. The GBA Study Group which includes representatives from CAISO, Silicon Valley Power, City and County of San Francisco, Western Area Power Authority, and PG&E participated in this study. In this study, the thermal performance of eleven transmission alternatives was assessed. The preliminary results indicate that the following transmission alternatives surpassed the power flow performance of the other alternatives:

1. Build a new 500/230 kV substation near Collinsville with two 500/230 kV transformers; loop the Vaca Dixon-Tesla (or Table Mountain-Tesla) 500 kV line

to the new substation; build a new 230 DCTL between the new substation and Pittsburg Substation; and add a new 500/230 kV transformer at Tesla/Tracy.

2. Build a new 500/230 kV substation at Sunol (near Newark); loop the Tesla-Los Banos 500 kV Line into the new substation; re-configure some 230 kV lines at Newark (move termination from Newark to the new substation); reconductor some of the reconfigured 230 kV lines; and add a new 500/230 kV transformer at Tesla/Tracy.

3. Build a new 500/230 kV substation at Sunol (near Newark); loop the Tesla-Los Banos 500 kV Line into the new substation; re-configure some 230 kV lines at Newark (move termination from Newark to the new substation); reconductor some of the reconfigured 230 kV lines; build a new 230 kV DCTL from Contra Costa-Pittsburg; and build a new 230 kV DCTL from Vaca-Dixon – Contra Costa.

4. Build a new 230 kV DCTL from Contra Costa-Pittsburg; build a new 230 kV DCTL from Vaca-Dixon – Contra Costa; and build a new 230 kV line from Tesla/Tracy-Livermore-Newark/Northern Receiving Station. Additional transmission components needed in order to complete this alternative and will be determined in later studies (Proposed by WAPA and other participating MUNI's).

Each alternative would mitigate most, if not all, the thermal problems with a reduction of approximately 2,000 MW of generation within the Greater Bay Area. A complete economic comparison of each alternative as well as an examination of environmental impacts would be determined during the next phase of studies. It is recommended that these alternatives be evaluated in further detail in the next phase of the study

Central California Clean Energy Transmission Project

Based on findings from the Tehachapi Collaborative Study Group (TCSG), PG&E started investigating the feasibility of a line between the Midway and Gregg Substations. Upon subsequent studies, the northern terminus was revised to include a location east of Gregg Substation. Transmission planning studies for this project are being conducted through the CAISO Stakeholder Process. Fourteen alternatives are being investigated by PG&E (see Table 8-2), including opportunities for potential future interconnections with Southern California Edison (SCE) to support SCE's Big Creek Area load. Ten alternatives to supply Big Creek Area are being investigated by SCE in a regional planning effort.

The Central California Clean Energy Transmission (C3ET) Project would increase transmission import capacity north of Midway Substation to allow transmission of power from renewable resources from southern California. It would also provide a valuable option to facilitate PG&E to meet its renewable procurement targets in the event that not enough northern California renewable projects materialize.

The C3ET Project would relieve Path 15 congestion by increasing the Path 15 south-to-north transfer capability by about 1,250 MW, and is expected to reduce the annual Path 15 congestion to less than 100 hours.

The C3ET Project would increase import capability to the Yosemite and Fresno area by about 500 MW. The current Fresno Area Long-term Transmission Plan proposing to build a Gates – Gregg 230 kV Double-Circuit Tower Line (DCTL) by around the same time is being subsumed into the C3ET Project Study as one of the alternatives being investigated. As such, if the C3ET Project is selected as the preferred alternative and constructed, the Gates – Gregg 230 kV DCTL would not be needed (or could be deferred beyond the planning horizon).

The C3ET Project would increase the Helms PSP pumping window and enhance support of three Helms units pumping operation. Power flow study results show that the existing system cannot support three units pumping at Helms PSP under the summer off-peak condition studied. The system can only support two units pumping when the combined Yosemite and Fresno areas loads are below 1,300 MW, and single unit pumping at the load level below 1,550 MW. Based on the Fresno area load duration curve, the estimated annual pumping window available for one and two-unit operation are 5,350 and 2,665 hours, respectively. The pumping window is expected to narrow with future load growth.

For more information, please see http://www.caiso.com/1f42/1f42daf7415e0.html. In addition, Appendix 7 contains PG&E's report on the reliability study performed in accordance with the C3ET Project Study Plan[6]. Appendix 8 contains the study report on the Top 5 Alternatives selected by the CAISO for further investigation.

Table 8-2
Proposed Alternatives being investigated by PG&E

1	Fresno 230 kV Reconductoring	Magunden – Rector 230 kV DCTL ("SCE-1")
2	Midway – E2[7] 500 kV DCTL	Magunden – Rector 230 kV DCTL ("SCE-1")
2a	Midway – E2 500 kV DCTL with S2[8] Loop-In	
2b	Midway – E2 500 kV DCTL with S2-S3 Loop-In, Whirlwind – S3 500 kV Line	
2c	Midway – E2 500 kV DCTL with S2 Loop-In, Midway – Vincent #3 Upgrade	
2d	Midway – Gregg 500 kV DCTL	Magunden – Rector 230 kV DCTL ("SCE-1")
3	Midway – E2 500 kV SCTL with S2 Loop-In	
4	Whirlwind – E2 500 kV DCTL with S2 Loop-In	
5	Midway – E2 230 kV DCTL	Magunden – Rector 230 kV DCTL ("SCE-1")
6	Fresno – Big Creek 230 kV inter-tie	
7	Midway – McCall – E2 230 kV DCTL	Magunden – Rector 230 kV DCTL ("SCE-1")
8	Gates – Gregg 230 kV DCTL	Magunden – Rector 230 kV DCTL ("SCE-1")
9	Raisin 230 kV Switching Station	Magunden – Rector 230 kV DCTL ("SCE-1")

6 http://www.caiso.com/200f/200fa7a754690.pdf

7 E2 is a conceptual new station between Gregg and Helms PSP and is one of the alternative terminus for the C3ET Project.

8 S2 and S3 are conceptual new stations to serve load in SCE Big Creek Area.

10	New generation 1000 MW in Fresno	Magunden – Rector 230 kV DCTL ("SCE-1")