DOCKET
11-IEP-1J
DATE Jul 26 2011
RECD. Aug 09 2011

NUCLEAR REACTOR SAFETY: BEYOND DESIGN BASIS EVENTS

CEC 2011 IEPR WORKSHOP
July 26, 2011

Peter Lam, Ph.D.
Administrative Judge Emeritus

SEVERE NUCLEAR ACCIDENTS

The Top Five

- Station Blackout
- Anticipated Transient Without Scram (ATWS)
- Reactor Vessel Rupture (Event V)
- Interface Loss of Coolant Accident
- Spent Fuel Pool Loss of Cooling

The Black Swan

- Multiple Reactor Accidents

LIKELIHOOD ESTIMATES

	Before Fukushima	*After Fukushima*
<u>The TOP FIVE</u>		
- Station Blackout	Extremely Unlikely	Occurred
- ATWS	Extremely Unlikely	?
- Reactor Vessel Rupture	Extremely Unlikely	?
- Interface LOCA	Extremely Unlikely	?
- Spent Fuel Pool Accident	Extremely Unlikely	Occurred
<u>THE BLACK SWAN</u>		
- Multiple Core Melts	Absolutely Unlikely	Occurred

INTERFACING LOCA PROBABILITY BY CONVENTIONAL WISDOM

- 10E-8 to 10E-9 Per Year
- Dictated by Check Valve and Motor-Operated-Valve Rupture Data
- Well Within Safety Goal Expectations
- Wide Acceptance Within Industry and Government

BROWNS FERRY-1 CORE SPRAY Sys 1

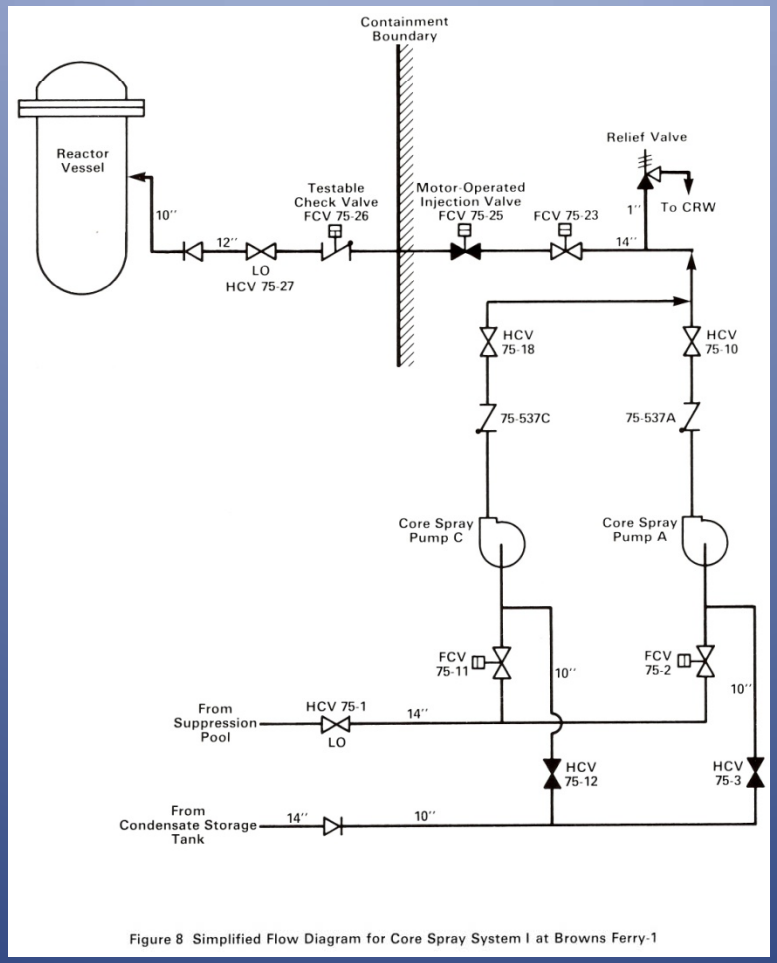

Figure 8 Simplified Flow Diagram for Core Spray System I at Browns Ferry-1

TESTABLE CHECK VALVE

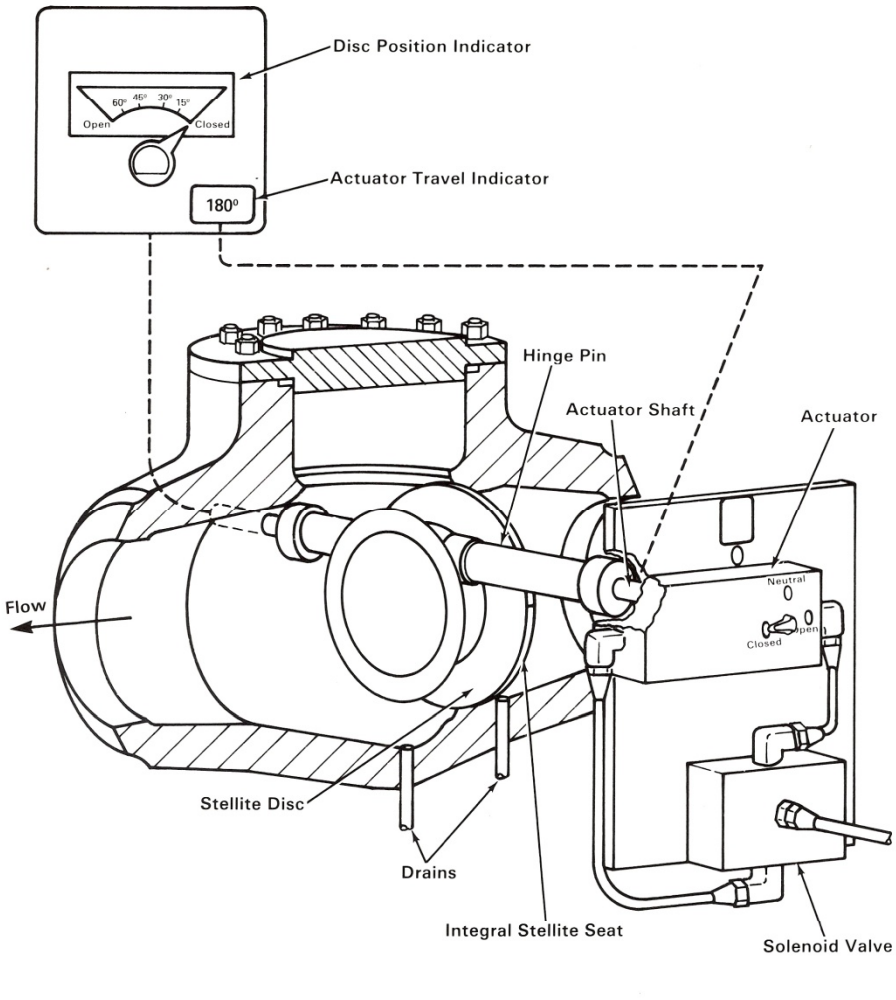

Figure 1 A Typical Testable Check Valve

BEYOND DESIGN BASIS EVENTS AFTER FUKUSHIMA

- Intense & Comprehensive Scrutiny
  - Numerous Participants:
    NRC, DOE, IAEA, INPO, EPRI, NEI, CEC, and Licensees
  - Significant Effort with Tight Schedules
  - Many Actionable Measures
- Genuine Improvement in Nuclear Reactor Safety

BEYOND DESIGN BASIS EVENTS AFTER FUKUSHIMA: ANOTHER VIEW

- Acknowledgement: Current Design Bases May Not Be Adequate?

- Debate The Need For Additional Federal And State Oversight
    - Real Policy & Technical Considerations
    - Issues For CEC Consideration
        - 2008 CEC IEPR Recommendation on Spent Fuel Pool
        - Life-extension Licensing
        - Hosgri & Shoreline Fault Seismic Issues

2008 CEC RECOMMENDATION ON SPENT FUEL POOL

- CEC Recommended Reducing Spent Fuel Pool Density In The 2008 CEC Integrated Energy Policy Report

- Real Policy And Technical Issues
  - Absence Of Federal Waste Storage Facility
  - Dry Cask Storage Licensing Limits
  - Dry Cask Thermal Limits On 100% 5-year Old Fuels

EMERGENCY PLANNING ZONE

- Diablo Emergency Planning Zone (EPZ)
  - 18 Miles North
  - 22 Miles South
- Federal Rule: 10-Mile EPZ
- NRC's Recommendation For U.S. Citizens Near Fukushima

NUCLEAR SAFETY AFTER FUKUSHIMA: OBSERVATIONS

- **Future Safety Improvements**
  - Current Extensive Federal Oversight Likely Be Expanded
  - Increased Industry Vigilance Be Expected
  - Inherent Difficulties
    - Sheer Size & Complexity
    - Idle Safety Systems, Large Capacity With Rapid Response
    - Human & System Interactions
    - Unforeseeable Events
  - Unforgiving Technology After A Severe Accident

- **State Agencies Role**
  - License Extension
  - Spent Fuel Pool Issues
  - Seismic Issues
  - Once Through Cooling
  - Emergency Planning Zone