Southern California Gas Company

A Sempra Energy utility℠

California Energy Commission
DOCKETED
12-ALT-02
TN # 68313
OCT 09 2012

Natural Gas Vehicle Technologies Path to Near-Zero Emissions

Jeffrey Reed, PhD
Director of Emerging Technologies
Southern California Gas Company
October 09, 2012

© 2006 The Gas Company. All copyright and trademark rights reserved.

Context

- Natural gas is
  - Clean
  - Cost effective
  - Domestic
- However – long term goals of zero emissions and 80% GHG reduction are challenging
- Key questions
  - How close can natural gas get to zero emissions and at what cost?
  - What synergies exist with other ZEV technologies?

Southern California Gas Company
A Sempra Energy utility®

NGV Technology Advancement Areas

Opportunity Area	Comments
Engine Technology and Drive Trains	• Improvements of 35% to 60%+ in fuel economy predicted by some experts • Both engine technology and hybridization can help • Aerodynamics, light-weight materials and peripherals can help as well • Fuel efficiency eliminates all tailpipe emissions -- #1 in the "loading order"
Advanced After-treatment	• Catalyst systems similar to those in use today • Has technical potential to reduce NOx to "near zero" levels (75%+ less than 2010 standards) (reduction from 0.2 to 0.05 g/bh-hr or lower)
Low and Zero-carbon Pathways	• Hydrogen blends • Biogas • Solar methane synthesis
"Supporting " advances -- On-board tanks -- Fueling infrastructure	• Helps reduce lifecycle emissions by reducing required compression energy • Low –cost, efficient fueling infrastructure is a key enabler • Efficiency improvements reduce lifecycle emissions

Southern California Gas Company
A Sempra Energy utility®

Common Technology Opportunities

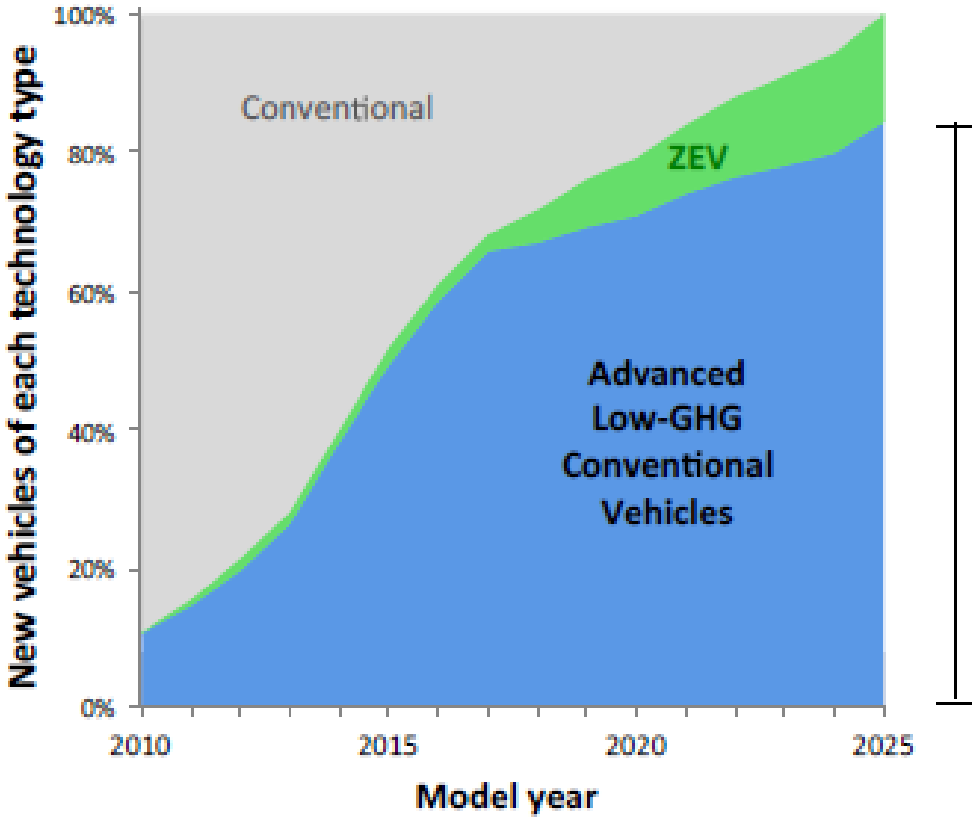

Source: CARB Clean Car Program presentation

Engine
- Variable valve control
- Direct injection
- Turbocharging
- Cylinder deactivation
- Cooled exhaust gas recirculation

Driveline
- Optimized controls
- 8-speed transmission
- Continuously variable
- Dual clutch transmission
- Engine stop-start

Vehicle
- Hybrid power assist
- Aerodynamics
- Low rolling resistance tires
- Advanced lightweight materials
- Low-GWP refrigerant
- Electric accessories

- Common opportunities with diesel and gasoline vehicles
- Greater recognition of NG in CARB vision would encourage manufacturer effort (items specific to gaseous fuel)
- Hydrogen/CNG blends offer infrastructure synergies with FCV

Southern California Gas Company
A Sempra Energy utility®

Path to 2050 Goals

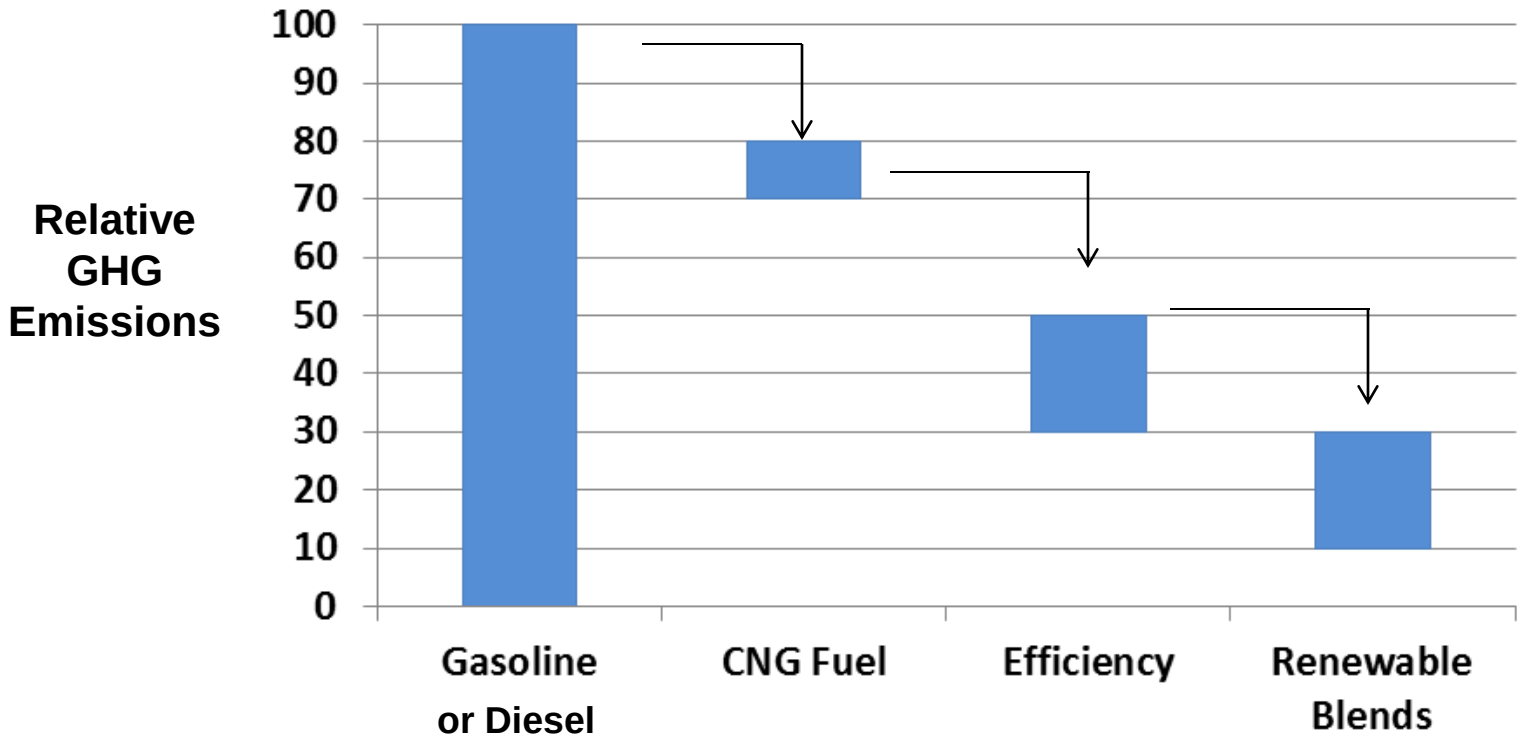

Southern California Gas Company
A Sempra Energy utility®

Example -- Next Generation Refuse/Transit

Project Overview

- Develop dedicated natural gas engine with near zero emissions without sacrificing performance or efficiency compared to 2010 diesel engine
- Doosan and SWRI are the technical leads
- $3.5M total funding: DOE/NREL -- $2 million CEC -- $1 millions, SCAQMD -- $500,000, SCG -- $500,000
- On-road testing to begin late 2013 – plan to test 3 vehicles

Demonstration Elements

- Modify 11L 340hp Doosan engine (conversion from lean burn SCR)
- Stoichiometric operation
- Cooled Exhaust Gas Recirculation for mixture dilution
- Three way Catalyst
- Advanced ignition system for highly dilute mixtures
- Optimized in-cylinder turbulence
- High efficiency turbo matching
- Advanced control for knock and misfire detection
- Potential to study H2 blends in later phase

Expected Benefits:

- 75%+ reduction in NOx emissions
- Similar efficiency and cost to diesel alternatives

Southern California Gas Company

A Sempra Energy utility®

Example – Near Zero Emission Buses

SoCalGas commissioned a study with GNA to assess performance and cost effectiveness of various natural gas solutions for transit buses

- Baseline technologies
  - Model year 2010 diesel or natural gas engines (0.2 g/bhp-hr NOx)
  - Hydrogen hybrid-electric fuel cell
  - Battery electric

- Fuel alternatives for a "zero emission" bus
  - Natural gas with advanced after-treatment
  - Natural gas hybrid-electric
  - Renewable CNG
  - Hydrogen-natural gas blended fuels

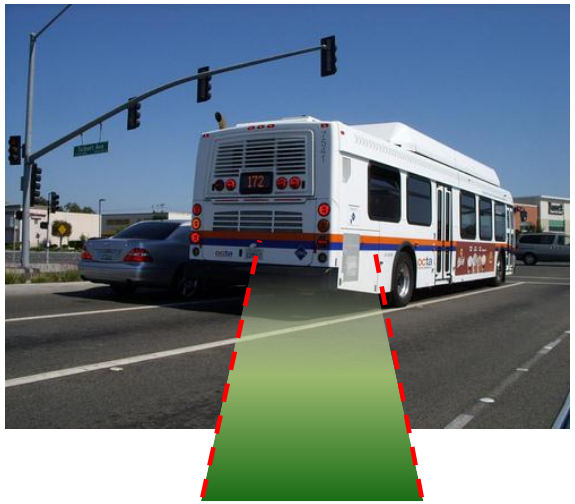

Three-way catalyst system

Southern California Gas Company

A Sempra Energy utility®

Analysis Results

Technologies	NOx (g/mi) (tailpipe)	GHG (g/mi) (WTW)	Cost per ton NOx reduced	Cost per ton GHG reduced	Total cost per mile
2010 CNG	0.8	2,607	n/a	($590)	$1.56
CNG with advanced after-treatment	0.12	2,607	($536K)	($540)	$1.60
H/CNG	0.8	2,688	n/a	($393)	$1.74
Renewable NG	0.8	435	n/a	($52)	$1.80
CNG hybrid	0.6	1,955	($705K)	($106)	$1.85
2010 Diesel - baseline	0.8	3,282	n/a	n/a	$2.00
Diesel hybrid	0.6	2,462	$675K	$164	$2.15
Battery electric	0.0	1,593	$1.1M	$500	$2.93
Fuel cell	0.0	1,793	$4.7M	$2,539	$6.17

Southern California Gas Company

A Sempra Energy utility®

Z-Bus Analysis Assumptions

Table 3: Summary of analysis assumptions

Technology	Cost	Fuel Economy (miles / diesel equivalent gallon)	Fuel Cost (per diesel equivalent gallon)
Diesel – baseline	$412,500	4.17	$3.88† + $3.00/gal DEF (used at 1/50 the rate of diesel)
CNG	$455,000	3.75	$1.62‡
Renewable CNG	$455,000	3.75	$2.66
H/CNG	$460,000	3.75	$2.26
CNG w/advanced after-treatment	$464,000	3.75	$1.62
Diesel hybrid	$580,000	5.56	$3.88† + $3.00/gal DEF (used at 1/50 the rate of diesel)
CNG hybrid	$622,500	5.00	$1.62‡
Battery electric	$1,000,000	11.25	$6.01
Hydrogen hybrid fuel cell	$2,000,000	7.92	$10.86

† US Department of Energy, Energy Information Administration, US On-Highway Diesel Fuel Prices; average of 6 months California ULSD price per gallon from 9/5/2011 to 3/5/2012

‡ Intelligence Press, Inc., Natural Gas Intelligence Firm Physical Natural Gas Price Bulletin History For Natural Gas Delivered at Socal-Citygate; average from 1/20/12 to 3/5/12 plus average Southern California transit cost of electricity, maintenance, and capital

Southern California Gas Company

A Sempra Energy utility®

Example – Low Emission Turbine Drive

Project Overview

- Demonstrate near-zero emissions dual liquid / natural gas combustor for the existing 350 kW gas turbine engine designed for Class-8 trucks under SCG funding
- SCG co-funding low-NOx combustor with Brayton Energy
- CEC, Kenworth & FedEX -- $1.5 millions to develop a Class 8 MT dual fuel truck for the demonstration

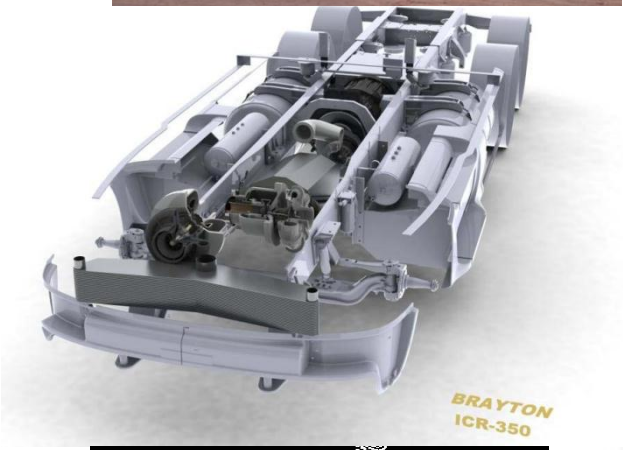

Benefits

- Near-zero emissions (75% NOx improvement)
  NOx = 0.05 g/bhp/hr, CO = 0.02 g/bhp/hr
- Fuel flexibility
- Improved efficiency advanced turbine design

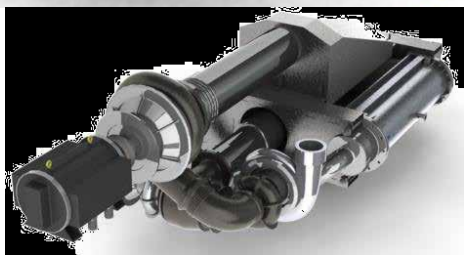

Status and Timing

- Testing of this turbine in a truck is schedule for April 2013
- First chassis dyno runs expected in July 2013.
- FedEX will receive the CNG-only truck (made by Kenworth) in late 2013 and operate it in 2014 in CA

Southern California Gas Company
A Sempra Energy utility®

Zero Emission Truck & Electric Catenary Highway (ZETECH)

Technology Description

- Hybrid-electric natural gas truck with Catenary capable zero-emission operations and a small batter pack for short distance travel on all-electric power.

Potential Benefit

- Unlimited zero-emission range when connected to a Catenary system.
- Extensible system that can grow from near-dock facilities to the I-710 corridor and eventually comprise a zero emission electric container movement system sought by the ports.
- Ability to use natural gas in extended off- Catenary operation, completely eliminating diesel emissions

Goals / Targets

- Based on existing hybrid technologies and demonstrated system components -- deployment of a Catenary system for near-dock rail yards feasible in the 2016-2020 time frame

Status

- Developing funding team and concept

Southern California Gas Company
A Sempra Energy utility®

US Hybrid- Plug-in Hybrid Natural Gas Drayage Truck Demonstration

Technology Description

- Demo of 80,000 GVWR Nat Gas Plug-in Hybrid Truck
- Utilizes ISL-G (8.9L) CARB certified engine, 100 kWh Li-Ion Battery Pack, 500 HP Electric Drive Motor, 300 amp converter

Potential Benefits

- Eliminates constant idling typical of Port facilities where drayage trucks often queue for long periods
- Hybrid truck will operate in electric mode (EV mode) around 25% of time (30 miles) in charge depletion mode, and then, in hybrid mode with charge sustaining.
- Overcomes perceived issue of lack of power from CWI 8.9 liter engine currently in use.
- No limitation of the range and usage and it will have higher operating hours than a diesel tank.

Goals & Targets

- Target a 30% fuel reduction due to HEV operation
- Out-perform strict CARB emission standards
- CNG / LNG / biomethane capable

Partners

- CEC funding $1.632 Million
- GTI is primary for project
- US Hybrid, CWI, Calko Transport, Freightliner, UC-Riverside
- Potential to use SoCal truck platform

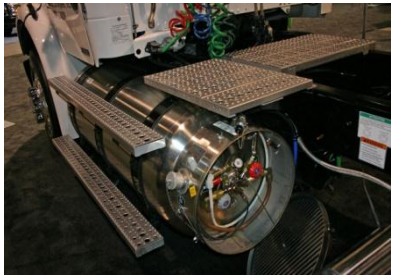

Southern California Gas Company

A Sempra Energy utility®

Low and Zero-Carbon Pathways

- Various feedstocks under study or development
  - Organic waste
  - Energy crops (algae, switchgrass)
  - Water
- And conversion technology
  - Anaerobic digestion
  - Gasification
  - Solar thermochemical
  - Electrolysis

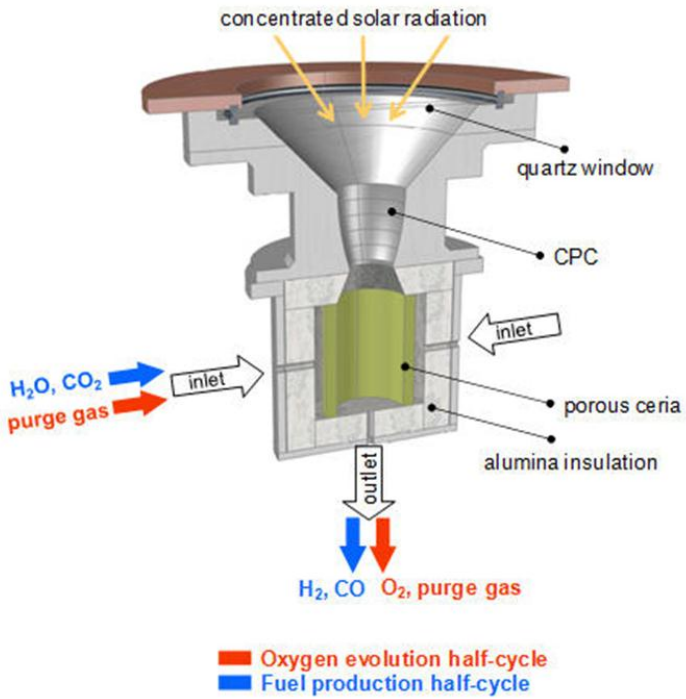

Southern California Gas Company
A Sempra Energy utility®

Advanced Storage Systems

- Advanced cost effective CNG and LNG on-board fuel storage systems – multiple awards under the ARPA-e MOVE program
  - Adsorbed Natural Gas, new materials
  - Conformable Tank Configurations
  - Extended Cylinder Certification Life
  - Non-destructive Active Monitoring for Damage Detection
  - Nitrogen Blanketed/No Vent Cryogenic Tank Technology

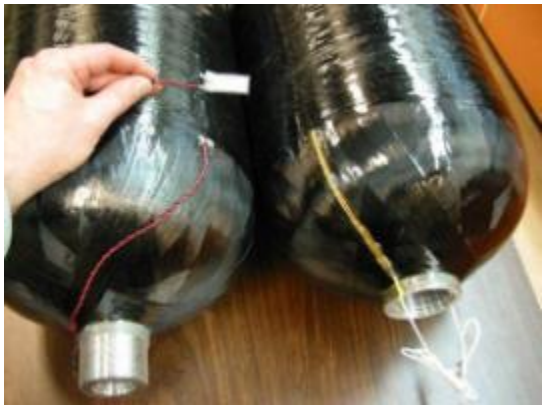

Example – Low-Pressure Adsorption Storage

Project Overview

- Develop conformable, medium pressure tanks at energy density comparable to high pressure tanks
- Employs nano-structured carbon adsorbant develop by Missouri University
- Co-funding by CEC, SCG and MU

Benefits

- Less-expensive, thinner-walled pressure vessels
- Conformability
- Less-compression

Status

- Successful proof of concept
- Technology licensed to A Adsorbed Natural Gas Products
- Roughly 2 year commercialization plan

Adsorption Storage Media

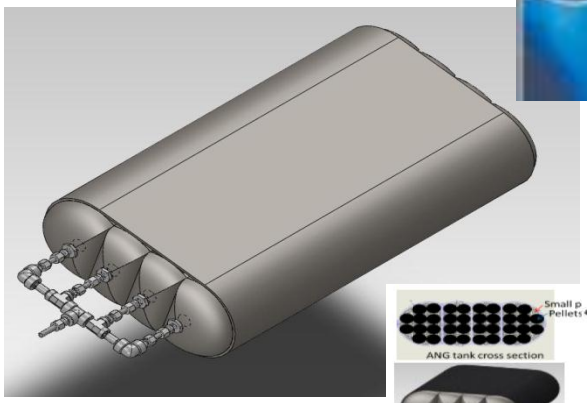

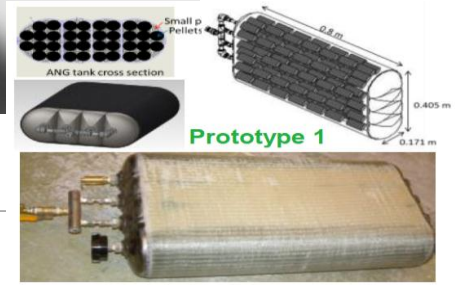

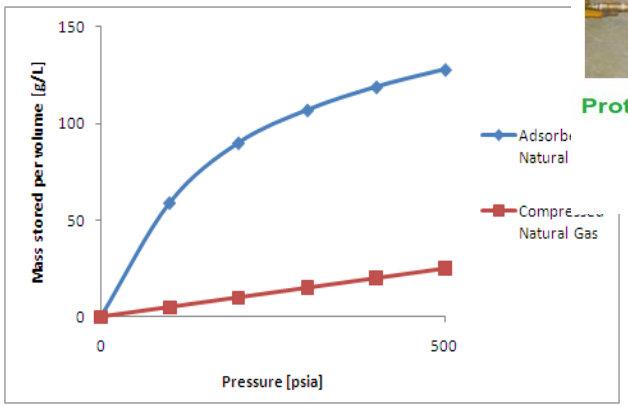

Southern California Gas Company
A Sempra Energy utility®

Example – Next-gen CNG Infrastructure

Overview

The project is demonstration of three self-contained CNG compressor units manufactured by GNC Galileo S.A., of Argentina for fleet and retail applications

Potential benefits over traditional CNG compressors

- Compact, self-contained unit suitable for urban setting
- Plug and Play - all components in explosion proof steel enclosure
- Ability to right size a fast-fill product to demand
- Provide solution for small and mid-sized fleets
- Smart software to optimize performance and diagnose problems quickly

Status

- Demonstrations ongoing
- Products are commercially available
- GE and others have announced plans for similar offerings

Microbox – Riverside Base

Nanobox

Southern California Gas Company

A Sempra Energy utility®

Example -- Home Refueling Appliance

Overview
Mutli-party system engineering study and conceptual design for home refueling appliance costing under $1500 (under $1/gallon for compression)

Potential benefits
- Convenient home fueling and reduction of "range anxiety"

Status
- Multiple vendors and approaches assessed
- Several promising concepts identified
- ARPA-e MOVE program has funded several design efforts
- GE announced a $600 product available in 2 years

Samples of HRA Products/Concepts

NatGasCar

Phill - Impco

Galileo (concept)

Southern California Gas Company
A Sempra Energy utility®

Discussion Points

- Lost opportunity of delay in deployment of NGV solutions
- Ultra-low versus zero tailpipe emissions
- Zero-carbon pathways using methane and methane blends

Southern California Gas Company
A Sempra Energy utility®