DAMPER EQUIPPED
GAS WATER HEATER

A Spanish language version of these instructions is available by contacting the company listed on the rating plate.
La version espanola de estas instrucciones se puede obtener al escribirle a la fabrica cuyo nombre aparece en la placa de especificaciones.

INSTALLATION & OPERATION INSTRUCTION MANUAL For Flammable Vapor Ignition Resistant System Equipped Water Heater

California Energy Commission
DOCKETED
15-BSTD-01
TN # 74339
JAN 21 2015

WARNING: If the information in these instructions is not followed exactly, a fire or explosion may result causing property damage, personal injury or death.

For Your Safety

- **Do not store or use gasoline or other flammable, combustible, or corrosive vapors and liquids in the vicinity of this or any other appliance.**

- **WHAT TO DO IF YOU SMELL GAS**
  - **Do not try to light any appliance.**
  - **Do not touch any electrical switch; do not use any phone in your building.**
  - **Immediately call your gas supplier from a neighbor's phone. Follow the gas supplier's instructions.**
  - **If you cannot reach your gas supplier, call the fire department.**
- **Installation and service must be performed by a qualified installer, service agency or the gas supplier.**

For your family's comfort, safety and convenience, we recommend this water heater to be installed and serviced by a plumbing professional.

238-47993-00C 6/12

CONGRATULATIONS!

You have just purchased one of the finest water heaters on the market today!

This installation, operation and instruction manual will explain in detail the installation and maintenance of your new Damper Equipped Flammable Vapor Ignition Resistant Gas Water Heater. We strongly recommend that you contact a plumbing professional for the installation of this water heater.

We require that you carefully read this manual, as well as the enclosed warranty, and refer to it when questions arise. If you have any specific questions concerning your warranty, please consult the plumbing professional from whom your water heater was purchased. For your records we recommend that you write the model, serial number and installation date of your water heater in the maintenance section in the back of this manual.

Special Flammable Vapor Ignition Resistant System:

This water heater is equipped with a Flammable Vapor Ignition Resistant System. In the event of improper usage or storage of gasoline or other flammable materials in the location where the water heater is installed, the technology will resist ignition of the flammable vapors outside the confines of the water heater.

The Flammable Vapor Ignition Resistant System features:

- Advanced Flame Arrestor Design
- Re-settable Thermal Switch to prevent burner/pilot operation with restricted airflow
- Flammable Vapor Sensor
- Automatic Ignition Device
- Sight Window to observe operation of pilot and burner

FOR YOUR SAFETY: Activation of the Flammable Vapor Ignition Resistant System occurs when flammable vapors are drawn into the water heater and are combusted. If flammable vapors are detected:

- Do not try to light any appliance.
- Do not touch any electrical switch; do not use any phone in your building.
- Leave the premises and immediately call the fire department from a neighbor's phone. Follow the fire department's instructions.

Once the flammable vapor has been evacuated, contact your plumbing professional or the manufacturer for further instructions. Replacement of a Flammable Vapor Ignition Resistant System equipped water heater due to a flammable vapor shutdown is not covered under the terms of the limited warranty.

TABLE OF CONTENTS

	Page
SPECIFICATIONS	4
GENERAL INFORMATION	5
INSTALLATION	7
Locating the Water Heater	7
Minimum Clearances	10
Venting	11
Combustion Air Supply	12
Water Connections	14
Gas Connections	17
Electrical Connections	18
Wiring Diagram	19
GENERAL OPERATION	20
Lighting and Shutdown Instructions	21
Thermostat Adjustments	22
Burner Flame Check	23
MAINTENANCE	24
TROUBLESHOOTING	28
INSTALLATION FOR POTABLE WATER	31
PARTS LIST DRAWING	32
PARTS LIST	33
INSTALLATION INSTRUCTIONS FOR POTABLE WATER AND SPACE HEATING	34
NOTES	35

SPECIFICATIONS

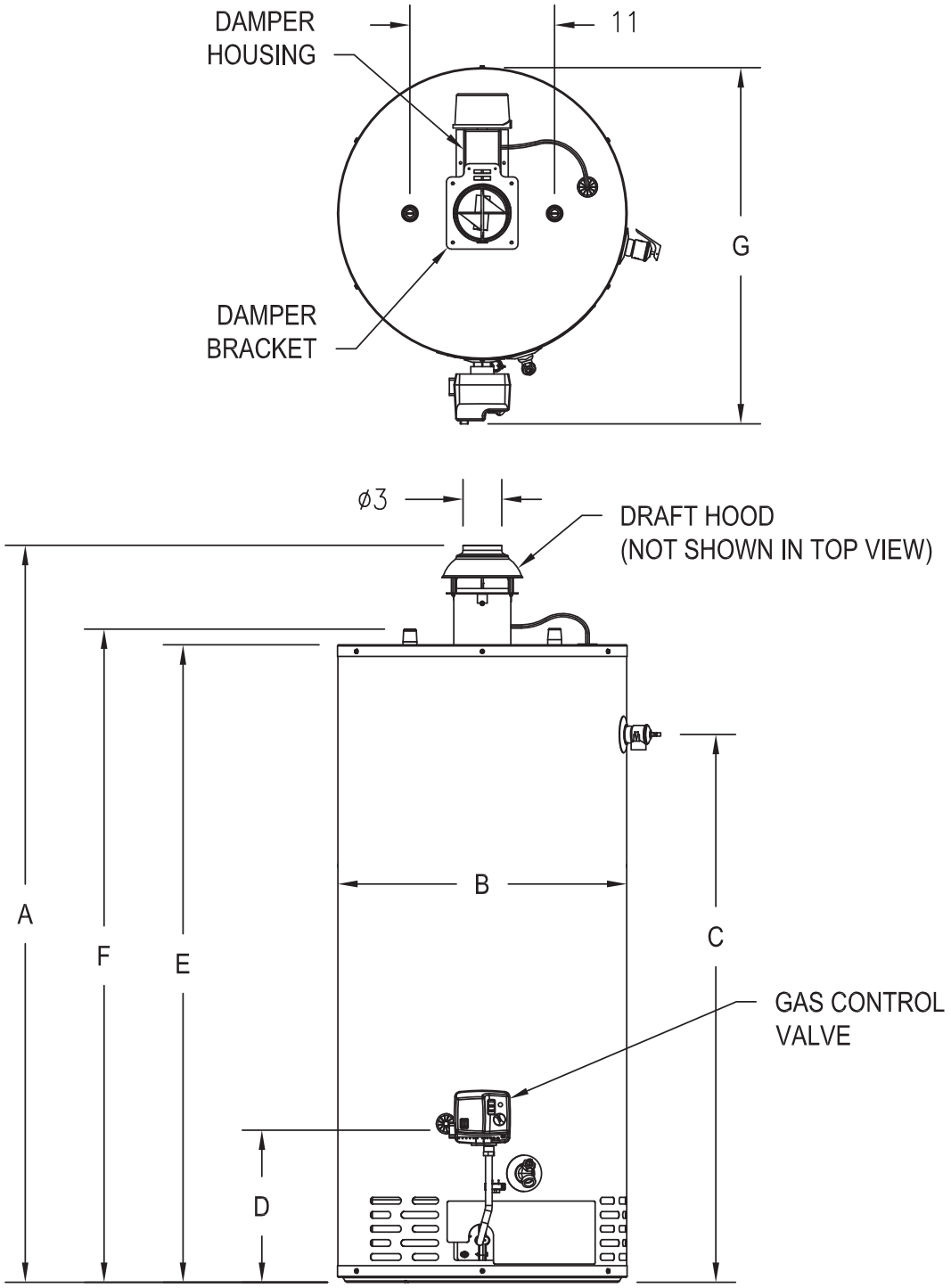

Figure 1

			Approx. Dimensions (in.)						
	Capacity (gal.)	Input (Btu/hr)	A	B	C	D	E	F	G
D4403S*F (BN,SX)	40	38,000	55 1/2	22	41 1/2	11 1/2	48	49 1/2	27
D4504S*F (BN,SX)	50	40,000	64	22	50	11 1/2	56 1/2	58	27

* denotes warranty year
BN denotes natural gas
SX denotes LP

GENERAL INFORMATION

This gas-fired water heater is design certified by CSA International under the applicable American National Standard, Z21.10.1-Latest Edition or CSA 4.1-Latest Edition, available from CSA International, 8501 East Pleasant Valley Road, Cleveland, OH 44131-5575, USA.

This water heater must be installed in accordance with local codes. In the absence of local codes, it must be installed in compliance with the National Fuel Gas Code, ANSI Z223.1-Latest Edition, or in Canada, Natural Gas Installation Code, CAN/CGA B149.1-Latest Edition, or Propane Installation Code, CAN/CGA B149.2-Latest Edition. The warranty for this water heater is in effect only when the water heater is installed, adjusted, and operated in accordance with these Installation and Operating Instructions. The manufacturer will not be liable for any damage resulting from alteration and/or failure to comply with these instructions.

This water heater is not design certified for installation in a mobile home. Such an installation may create a hazardous condition and will void the warranty.

This water heater has been designed and certified for the purpose of heating potable water. The installation and use of this water heater for any purpose other than the heating of potable water may cause damage to the water heater, create a hazardous condition, and void the warranty.

⚠ CAUTION

Incorrect operation of this water heater may create a hazard to life and property and will void the warranty.

Do not use this water heater if any part has been submerged in water. Immediately call a qualified service technician to inspect the water heater and to replace any part of the control system and any gas control, which has been under water. Depending upon the individual circumstances, it may be necessary to replace the entire water heater.

⚠ DANGER

Do not store or use gasoline or other flammable, combustible, or corrosive vapors and liquids in the vicinity of this or any other appliance.

IMPORTANT

Before proceeding, please inspect the water heater and components for possible damage. DO NOT install any damaged components. If damage is evident, please contact the supplier where the water heater was purchased or the manufacturer listed on the rating plate for replacement parts.

This water heater has been manufactured for operation at altitudes from sea level to 2000 feet (*610 m*) (unless otherwise specified on the water heater rating plate). For use of this water heater at an elevation greater than 2000 feet (*610 m*), contact the dealer or manufacturer listed on the rating plate for information on any necessary modifications. Uncorrected operation of this water heater may create a hazard to life and property.

Make sure that you check the rating plate and combination gas control on the water heater to be certain that the type of gas being supplied corresponds with the marking on the rating plate and combination gas control.

A sacrificial anode is used to extend tank life. The removal of this anode, for any reason, will void the warranty. In areas where water is unusually active, an odor may occur at the hot water faucet due to a reaction between the sacrificial anode and the impurities in the water. If this should happen, an alternative anode may be purchased from the supplier that installed this water heater. This will minimize the odor while protecting the tank. Additionally, the water heater should be flushed with appropriate dissolvers to eliminate any bacteria.

INSTALLATION

Locating the Water Heater

⚠ WARNING

Water heaters are heat producing appliances. To avoid damage or injury, there must be no materials stored against the water heater or vent-air intake system, and proper care must be taken to avoid unnecessary contact, especially by children, with the water heater and vent-air intake components. UNDER NO CIRCUMSTANCES SHALL FLAMMABLE MATERIALS SUCH AS GASOLINE OR PAINT THINNER BE USED OR STORED IN THE VICINITY OF THIS WATER HEATER, VENT-AIR INTAKE SYSTEM OR IN ANY LOCATION FROM WHICH FUMES COULD REACH THE WATER HEATER OR VENT-AIR INTAKE SYSTEM.

This water heater must NOT be installed in any location where gasoline or flammable vapors are likely to be present, unless the installation is such to eliminate the probable ignition of gasoline or flammable vapors.

Water heaters in residential garages must be installed and located, or protected, to avoid physical damage. For other installations refer to local codes. In the absence of local codes, the water heater must be installed in compliance with the National Fuel Gas Code, ANSI Z223.1- Latest Edition, or in Canada, Natural Gas Installation Code, CAN/CGA B149.1-Latest Edition, or Propane Installation Code, CAN/CGA B149.2-Latest Edition.

The location of this water heater is of the utmost importance. Before installing this water heater, read the Installation section of these instructions. After reading these Installation and Operation Instructions, select a location for the water heater where the floor is level and is easily accessible to gas and water supply lines. DO NOT locate the water heater where water lines could be subjected to freezing temperatures. Make sure the cold water pipes are not located directly above the gas control, so that condensate during humid weather does not drip on the controls.

This water heater MUST be installed indoors out of the wind and weather.

To comply with NSF requirements, this water heater is to be:

a) Sealed to the floor with sealant, in a smooth and easily cleanable way, or;
b) Installed with an optional leg kit that includes legs and/or extensions that provide a minimum clearance of 6” beneath the water heater.

Installation (Locating the Water Heater) continued-

Note: For California installations, this water heater must be braced, anchored, or strapped to avoid falling or moving during an earthquake. See instructions for correct installation procedures. Instructions may be obtained from DSA Headquarters Office, 1102 Q Street, Suite 5100, Sacramento, California 95811.

Water heater corrosion and component failure can be caused by the heating and breakdown of airborne chemical vapors. Examples of some typical compounds that are potentially corrosive are: spray can propellants, cleaning solvents, refrigerator and air conditioning refrigerants, swimming pool chemicals, calcium and sodium chloride, waxes and process chemicals. These materials are corrosive at very low concentration levels with little or no odor to reveal their presence. NOTE: DAMAGE TO THE WATER HEATER CAUSED BY EXPOSURE TO CORROSIVE VAPORS IS NOT COVERED BY THE WARRANTY. DO NOT OPERATE THE WATER HEATER IF EXPOSURE HAS OR WILL OCCUR. DO NOT STORE ANY POTENTIALLY CORROSIVE COMPOUNDS IN THE VICINITY OF THE WATER HEATER.

⚠ WARNING

Liquefied petroleum gases/propane gas are heavier than air and will remain at floor level if there is a leak. Basements, crawl spaces, closets and areas below ground level will serve as pockets for accumulation of leaking gas. Before lighting, smell all around the appliance area for gas. Be sure to smell next to the floor.

If You Smell Gas:

- Do not try to light any appliance.
- Do touch any electrical switch; do not use any telephone in your building.
- Immediately call your gas supplier from a neighbor's telephone. Follow the gas supplier's instructions.
- If you cannot reach your gas supplier, call the fire department.

Do not operate appliance until leakage is corrected!

⚠ WARNING

DO NOT ATTEMPT TO LIGHT ANY GAS APPLIANCE IF YOU ARE NOT CERTAIN OF THE FOLLOWING:

- Liquefied petroleum gases/propane gas and natural gas have an odorant added by the gas supplier that aids in detection of the gas.
- Most people recognize this odor as a “sulfur” or “rotten egg” smell.
- Other conditions, such as “odorant fade” can cause the odorant to diminish in intensity, or “fade,” and not be as readily detectable.
- If you have a diminished sense of smell, or are in any way unsure of the presence of gas, immediately contact your gas supplier from a neighbor’s telephone.
- Gas detectors are available. Contact your gas supplier or plumbing professional for more information.

Proper venting practices must be considered when selecting a location for this water heater. For exact venting specifications, please consult the Venting section of these Installation and Operating Instructions.

This water heater must be located in an area where leakage of the tank, water line connections, or the combination temperature and pressure relief valve will not result in damage to the area adjacent to the water heater or to lower floors of the structure. When such locations cannot be avoided, a suitable drain pan must be installed under the water heater. The drain pan must have a minimum length and width of at least 4 in. (*10.2 cm*) greater than the diameter of the water heater and must not restrict proper combustion air flow to the water heater. The drain pan, as described above, can be purchased from your plumbing professional. The drain pan must be piped to an adequate drain. The piping must be at least 3/4 in. *(1.9 cm)* in diameter and pitched for proper drainage.

It is recommended that a minimum clearance of 4 in. *(10.2 cm)* be provided on the side of the water heater for servicing and maintenance of the combination temperature and pressure relief valve.

Minimum Clearances

⚠ WARNING

Failure to adhere to these installation and operating instructions may create a hazard to life and property and will nullify the warranty.

This installation MUST allow access to the front of the water heater and adequate clearance must be provided for servicing and operating this water heater. The water heater may be installed on either a combustible or non-combustible floor. If the water heater is to be installed directly on carpeting, it must be installed on top of a metal or wood panel (or equivalent) extending beyond the full width and depth of the water heater by at least 3 in. *(7.6 cm)* in any direction or, if the appliance is to be installed in an alcove or closet, the entire floor must be covered by the panel. If the rating plate or the label on the front of the heater specifies minimum clearances less than those listed in the below table, the water heater must be installed in accordance with the minimum clearances listed on the rating plate or the label on the front of the heater. Increase distances to provide clearance for servicing.

If it is necessary to install this water heater in an alcove, use the clearances listed in Figure 2.

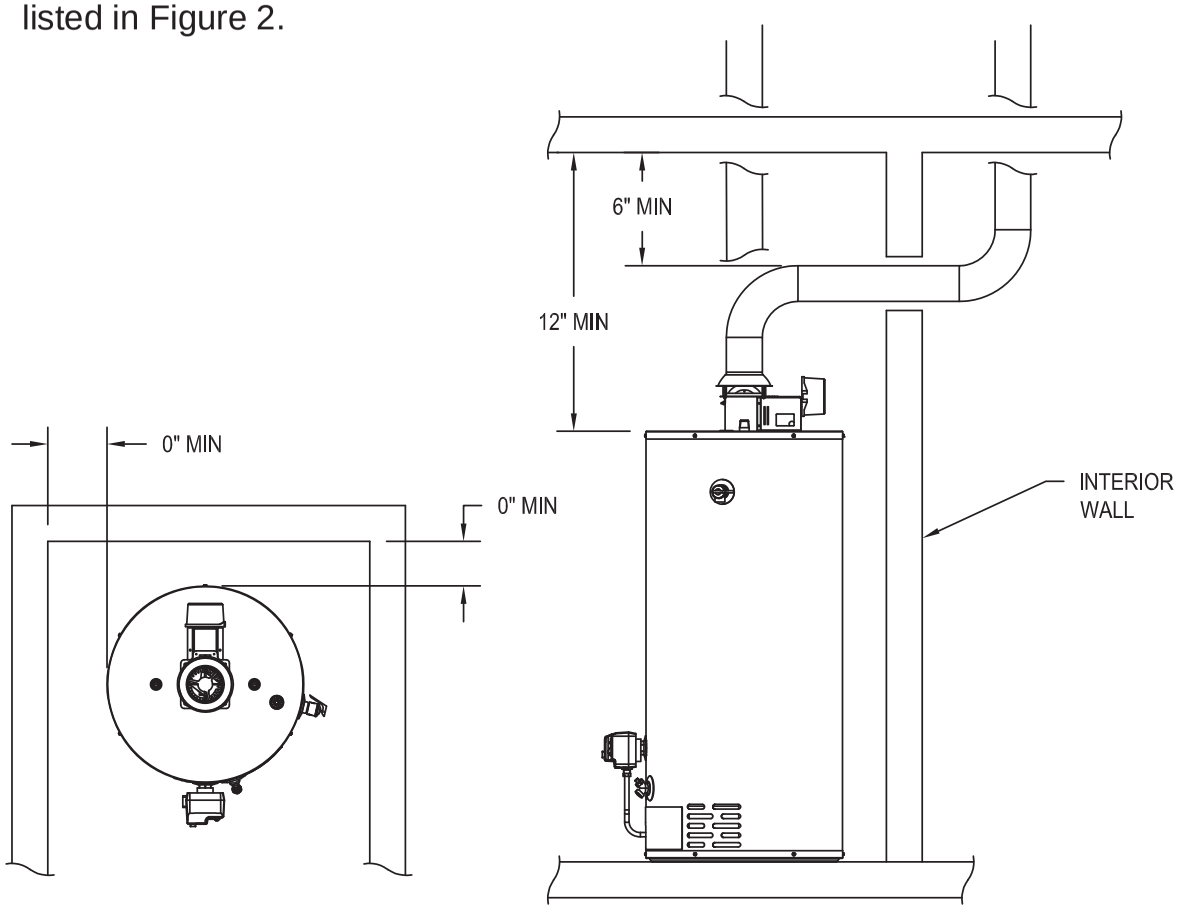

Figure 2. Minimum Clearances for an Alcove Installation.

Venting

⚠ WARNING

The venting system must be installed properly following all local codes or in the absence of local codes, the National Fuel Gas Code, ANSI Z223.1-Latest Edition, or in Canada, The Natural Gas and Propane Installation Code, B149-Latest Edition. Failure to properly install the venting system could result in property damage, personal injury, or death.

This water heater has been shipped with a draft hood, also called a draft diverter, for which it was designed. The water heater must be operated with this draft hood properly installed on the damper bracket. If ever removed, the draft hood must be replaced in the same position and properly secured.

⚠ WARNING

Carefully inspect the venting system of a replacement water heater installation before connecting to the venting system. All joints in the vent connector must be securely fastened with screws and fit tightly together. Inspect the venting system for signs of deterioration (rust and perforation) and replace any sections that are not in good condition.

The chimney must be lined and in good condition. Check to make sure the venting system is properly sized for the water heater. If the venting system was previously sized for another gas appliance that has been removed, the venting system may now be too large. Refer to the National Fuel Gas Code ANSI Z223.1-Latest Edition, or in Canada, the Natural Gas and Propane Installation Code, B149-Latest Edition, for the correct sizing of venting systems and common venting with another gas appliance.

Do not vent this water heater into the venting system of another gas appliance designed to vent under positive pressure.

The water heater should be installed as close as practical to the venting system to minimize the vent connector length required. Refer to local codes for the distance limitations on vent connector lengths.

At the completion of the water heater installation, the burner and venting system must be checked for proper operation with all other commonly vented appliances in operation. Check for spillage of flue products around the outside relief opening of the draft hood after several minutes of operation. The flame from a match should be drawn into the draft hood. Do not use the water heater or connected equipment if spillage is detected until the problem is corrected. Refer to the latest edition of the National Fuel Gas Code, or in Canada, the Natural Gas and Propane Installation Code for complete details on the “Procedure to Be Followed to Place Equipment in Operation.”

Venting continued-

This water heater must be connected to a lined masonry chimney or venting system approved by local codes or ordinances. The vent connector used to attach the draft hood outlet to the chimney or approved vent must be of the same diameter as the draft hood outlet or larger. For proper venting in certain installations, a larger vent connector may be needed. Consult venting tables in the National Fuel Gas Code (ANSI Z223.1-Latest Edition), and the Natural Gas and Propane Installation Codes, CAN/CGA (B149.1 or B149.2-Latest Editions) or local code officials for proper application for your area.

Combustion Air Supply

⚠ WARNING

Liquefied petroleum gases/propane gas is heavier than air and will remain at floor level if there is a leak. Basements, crawl spaces, closets, and areas below ground level will serve as pockets for accumulation of leaking gas. Before lighting, smell all around the water heater area for gas. Be sure to smell next to the floor.

IF YOU SMELL GAS:

- Do not try to light any appliance.
- Do not touch any electric switch; do not use any telephone in your building.
- Immediately call your gas supplier from a neighbor's telephone. Follow the gas supplier's instructions.
- If you cannot reach your gas supplier, call the fire department.

DO NOT OPERATE APPLIANCE UNTIL LEAKAGE IS CORRECTED!

Provide adequate air for combustion and ventilation. An insufficient supply of air will cause recirculation of combustion products resulting in air contamination that may be hazardous to life. Such a condition often will result in a yellow, luminous burner flame, causing carboning or sooting of the combustion chamber, burners, and flue tubes with possible damage to the water heater.

When an exhaust fan is installed in the same room with a heater, sufficient openings for air must be provided in the walls. Undersized openings will cause air to be drawn into the room through the chimney, causing recirculation of combustion products.

⚠ WARNING

The flow of combustion and ventilating air must not be obstructed.

Do not block or in any way restrict jacket air inlet slots located at the bottom front of the water heater.

Confined Spaces
Confined spaces are spaces defined as having less than 50 ft^3 of space per 1,000 BTU *(1.41 m^3/.29 kw)* per hour of input.

Unconfined Spaces
In unconfined spaces in buildings, infiltration may be adequate to provide air for combustion, ventilation, and dilution of flue gases. However, in buildings of tight construction (for example, weather stripping, heavily insulated, caulked, vapor barrier, etc.), additional air may need to be provided using the methods described below.

All Air from Inside the Building: The confined space must be provided with two permanent openings communicating directly with an additional room(s) of sufficient volume, so that the combined volume of all spaces meets the criteria for an unconfined space. The total input of all gas utilization equipment installed in the combined space must be considered in making this determination. Each opening must have a minimum free area of 1 square inch per 1,000 BTU *(6.45 cm^2/.29 kw)* per hour of the total input rating of all gas utilization equipment in the confined space, but not less than 100 square inches *(645 cm^2)*. One opening must be within 12 in. *(31 cm)* of the top and one within 12 in. *(31 cm)* of the bottom of the enclosure.

All Air from Outdoors: The confined space must be provided with two permanent openings, one commencing within 12 in. *(31 cm)* of the top and one commencing within 12 in. *(31 cm)* from the bottom of the enclosure. The openings must communicate directly, or by ducts, with the outdoors or spaces (crawl or attic) that freely communicate with the outdoors.

1. When directly communicating with the outdoors, each opening must have a minimum free area of 1 square inch per 4,000 BTU *(6.45 cm^2/1.2 kw)* per hour of total input rating of all equipment in the enclosure.
2. When communicating with the outdoors through vertical ducts, each opening must have a minimum free area of 1 square inch per 4,000 BTU *(6.45 cm^2/1.2 kw)* per hour of total input rating of all equipment in the enclosure.
3. When communicating with the outdoors through horizontal ducts, each opening must have a minimum free area of 1 square inch per 2,000 BTU *(6.45 cm^2/.6 kw)* per hour of total input rating of all equipment in the enclosure.
4. When ducts are used, they must be of the same cross-sectional area as the free area of the openings to which they connect. The minimum dimension of rectangular air ducts must be not less than 3 in. *(7.5 cm).*

Specially Engineered Installations
The requirements noted under CONFINED SPACES above shall not necessarily govern when special engineering, approved by the authority having jurisdiction, provides an adequate supply of air for combustion, ventilation, and dilution of flue gases.

Water Connections

Note: *BEFORE PROCEEDING WITH THE INSTALLATION, CLOSE THE MAIN WATER SUPPLY VALVE.*

After shutting off the main water supply, open a faucet to relieve the water line pressure to prevent any water from leaking out of the pipes while making the water connections to the water heater. After the pressure has been relieved, close the faucet. The COLD water inlet and HOT water outlet are identified on the top of the water heater. The fittings at the cold water inlet and hot water outlet are dielectric waterway fittings with 3/4” NPT male thread. Make the proper plumbing connections between the water heater and the plumbing system to the house. Install a shut-off valve in the cold water supply line.

⚠ WARNING

If sweat fittings are to be used, DO NOT apply heat to the nipples on top of the water heater. Sweat the tubing to the adapter before fitting the adapter to the water connections. It is imperative that heat is not applied to the nipples containing a plastic liner.

If this water heater is installed in a closed water supply system, such as the one having a back-flow preventer in the cold water supply, provisions must be made to control thermal expansion. DO NOT operate this water heater in a closed system without provisions for controlling thermal expansion. Your water supplier or local plumbing inspector should be contacted on how to control this situation.

⚠ WARNING

FAILURE TO INSTALL AND MAINTAIN A NEW, LISTED 3/4” X 3/4” TEMPERATURE AND PRESSURE RELIEF VALVE WILL RELEASE THE MANUFACTURER FROM ANY CLAIM, WHICH MIGHT RESULT FROM EXCESSIVE TEMPERATURE AND PRESSURES.

After installation of the water lines, open the main water supply valve and fill the water heater. While the water heater is filling, open several hot water faucets to allow air to escape from the water system. When a steady stream of water flows through the faucets, close them and check all water connections for possible leaks. NEVER OPERATE THE WATER HEATER WITHOUT FIRST BEING CERTAIN IT IS FILLED WITH WATER.

⚠ WARNING

For protection against excessive temperatures and pressure, install temperature and pressure protective equipment required by local codes, but not less than a combination temperature and pressure relief valve certified by a nationally recognized testing laboratory that maintains periodic inspection of production of listed equipment or materials as meeting the requirements of the Standard for *Relief Valves and Automatic Gas Shutoff Devices for Hot Water Supply Systems, ANSI Z21.22 or the Standard CAN1-4.4. Temperature and Pressure* and the Standard *CAN1-4.4, Temperature, Pressure, Temperature and Pressure Relief Valves and Vacuum Relief Valves*. The combination temperature and pressure relief valve must be marked with a maximum set pressure not to exceed the maximum working pressure of the water heater. The combination temperature and pressure relief valve must also have an hourly rated temperature steam BTU discharge capacity not less than the hourly rating of the water heater.

Install the combination temperature and pressure relief valve into the opening provided and marked for this purpose on the water heater.

Note: Some models may already be equipped or supplied with a combination temperature and pressure relief valve. Verify that the combination temperature and pressure relief valve complies with local codes. If the combination temperature and pressure relief valve does not comply with local codes, replace it with one that does. Follow the installation instructions above on this page.

Install a discharge line, so that water discharged from the combination temperature and pressure relief valve will exit within 6 in. *(15.2 cm)* above, or any distance below the structural floor and cannot contact any live electrical part. The discharge line is to be installed to allow for complete drainage of both the combination temperature and pressure relief valve and the discharge line. The discharge opening must not be subjected to blockage or freezing. DO NOT thread, plug or cap the discharge line. It is recommended that a minimum clearance of 4 in. *(10.2 cm)* be provided on the side of the water heater for servicing and maintenance of the combination temperature and pressure relief valve.

Do not place a valve between the combination temperature and pressure relief valve and the tank.

⚠ WARNING

Hydrogen gas can be produced in an operating water heater that has not had water drawn from the tank for a long period of time (generally two weeks or more). Hydrogen gas is extremely flammable. To prevent the possibility of injury under these conditions, we recommend the hot water faucet to be open for several minutes at the kitchen sink before you use any electrical appliance, which is connected to the hot water system. If hydrogen is present, there will be an unusual sound, such as air escaping through the pipes as hot water begins to flow. Do not smoke or have open flame near the faucet at the time it is open.

This water heater can deliver scalding temperature water at any faucet in the system. Be careful whenever using hot water to avoid scalding injury. Certain appliances, such as dishwashers and automatic clothes washers may require increased temperature water. By setting the thermostat on this water heater to obtain increased water temperatures, the potential for scald injury increases. To protect against injury, you should install an ASSE approved mixing valve in the water system. This valve will reduce point of discharge temperature by mixing cold and hot water in branch supply lines. Such valves are available from the manufacturer of this water heater or a local plumbing supplier. Please consult with a plumbing professional.

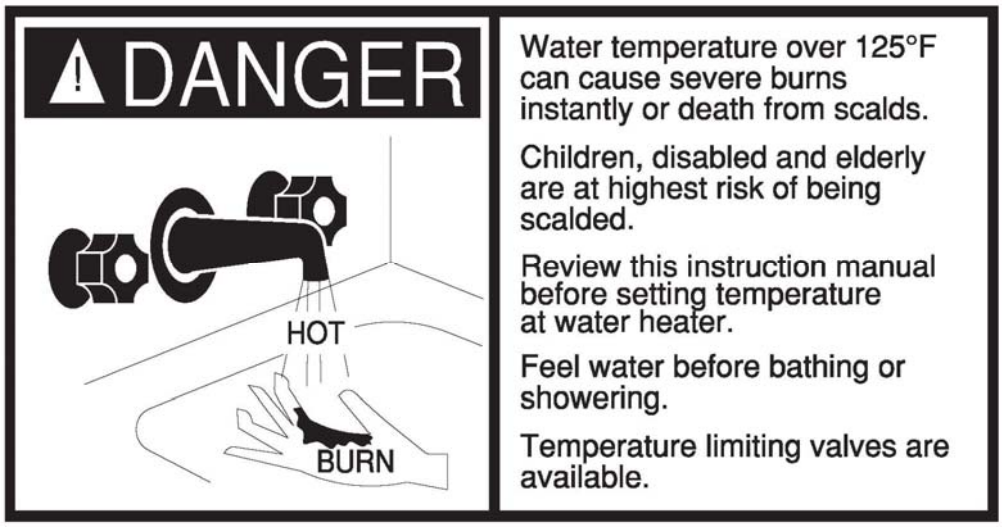

APPROXIMATE TIME/TEMPERATURE RELATIONSHIPS IN SCALDS	
120°F *(49°C)*	More than 5 minutes
125°F *(52°C)*	1½ to 2 minutes
130°F *(54°C)*	About 30 seconds
135°F *(57°C)*	About 10 seconds
140°F *(60°C)*	Less than 5 seconds
145°F *(63°C)*	Less than 3 seconds
150°F *(66°C)*	About 1½ seconds
155°F *(68°C)*	About 1 second

Gas Connections

The gas supply lines must meet all requirements of the National Fuel Gas Code, ANSI Z223.1-Latest Edition, or in Canada, the Natural Gas Installation Code, CAN/CGA B149.1-Latest Edition, or Propane Installation Code, CAN/CGA B149.2-Latest Edition.

The minimum permissible gas supply pressure for the purpose of input adjustment is 1 in. *(0.25 kPa)* water column above the operating manifold pressure. See the rating plate and gas valve for the manifold pressure and gas type. The maximum permissible gas supply pressure is 14 in. *(3.5 kPa)* water column for natural gas and liquefied petroleum gases/propane gas.

1. Connect this water heater only to the type of gas (Natural or Propane gas) as shown on the rating plate. Use clean black iron pipe or equivalent material approved by local codes and ordinances. Dirt and scale from the pipe can enter the gas valve and cause it to malfunction. Therefore, the inlet gas line must have a minimum length of 3 in. *(7.6 cm)* drip leg *(sediment trap)* installed as close to the water heater's gas valve as possible. A ground joint union must be installed as close to the water heater as possible in the gas supply line feeding the water heater to permit servicing of the water heater. Compounds used on the threaded joints of the gas piping must be resistant to the action of liquefied petroleum gases/propane gas. DO NOT apply pipe dope to the gas valve inlet and make certain that no pipe dope has become lodged in the inlet screen of the gas valve. Extreme care must be taken to ensure no pipe dope enters the gas valve. Avoid excessive torque when tightening the gas supply line to the gas valve. Excessive torque may result in cracking of the gas valve housing and could create a gas leak. When tightening gas supply line to a L.P. control, it is recommended to hold the inlet body of the control securely with an adequate wrench. The suggested maximum torque is 31.5 ft. lbs. *(4.4 kg-m)*.

⚠ WARNING

The manufacturer of this water heater will not be liable for any damage or injury caused as a result of a cracked gas inlet as a result of excessive torque.

2. This water heater and its gas connection must be leak tested before placing the water heater in operation. Check for gas leaks with a soap and water solution and a brush or a commercial leak detector fluid. NEVER USE A MATCH OR OPEN FLAME FOR TESTING!
3. While checking for leaks, care must be taken to prevent solution from contacting the electrical connections at the control. If electrical connections at the control become wet, they must be thoroughly dried before attempting to operate the water heater.

⚠ CAUTION

The water heater and an individual shut-off valve must be disconnected from the gas supply piping system during any pressure testing of the system at test pressures in excess of 1/2 psi *(3.5 kPa)*. The water heater must be isolated from the gas supply piping system by closing its manual shut-off valve during any pressure testing of the gas supply system at test pressures equal to or less than 1/2 psi *(3.5 kPa)*. The supply line must be capped when not connected to the water heater.

Electrical Connections

All electrical wiring and connections must be in accordance with the National Electric Code ANSI/NFPA No. 70-Latest Edition, or the Canadian Electrical Code C22.1-Latest Edition, and any local codes which may apply. The water heater must be electrically grounded.

If a flexible line cord and plug is permitted by local code, then provide a (3) three wire grounding type receptacle within 6 ft *(1.9 m)* of the water heater and use the flexible cord provided. Do not plug the line cord into a receptacle that can have its power supply interrupted by a switch that is used to turn on and off lights.

Turn off the water heater gas valve and disconnect power to the water heater. If wiring in conduit is required, cut the flexible line cord at least 6 in. *(15.2 cm)* from the bushing. Unscrew the damper, flip it over, and pull the cord into the damper housing. Cut the three wires from the line cord at the bushing inside of the housing. Drill a hole to receive the 1/2” electrical conduit connector on the side of the damper. Wire the power supply into the circuit at the appropriate locations.

Set the damper right side up and screw it do the jacket head as it was previously mounted. Re-connect the damper wire harness to the damper. Connect power to the water heater and turn the water heater gas valve back on.

⚠ CAUTION

Turn off or disconnect the electrical power supply to the water heater before servicing. Label all wires prior to disconnection when servicing controls. Wiring errors can cause improper and dangerous operation. Verify proper operation after servicing.

Route the damper power cord to eliminate any trip hazards and prevent any cutting and abrasion.

⚠ WARNING

Do not position the damper power cord where it can be cut or severed. The damper power cord’s position must be consistent with National Electric Code ANSI/NFPA No. 70-Latest Edition, or the Canadian Electrical Code C22.1-Latest Edition, and any local codes which may apply.

Wiring Diagram

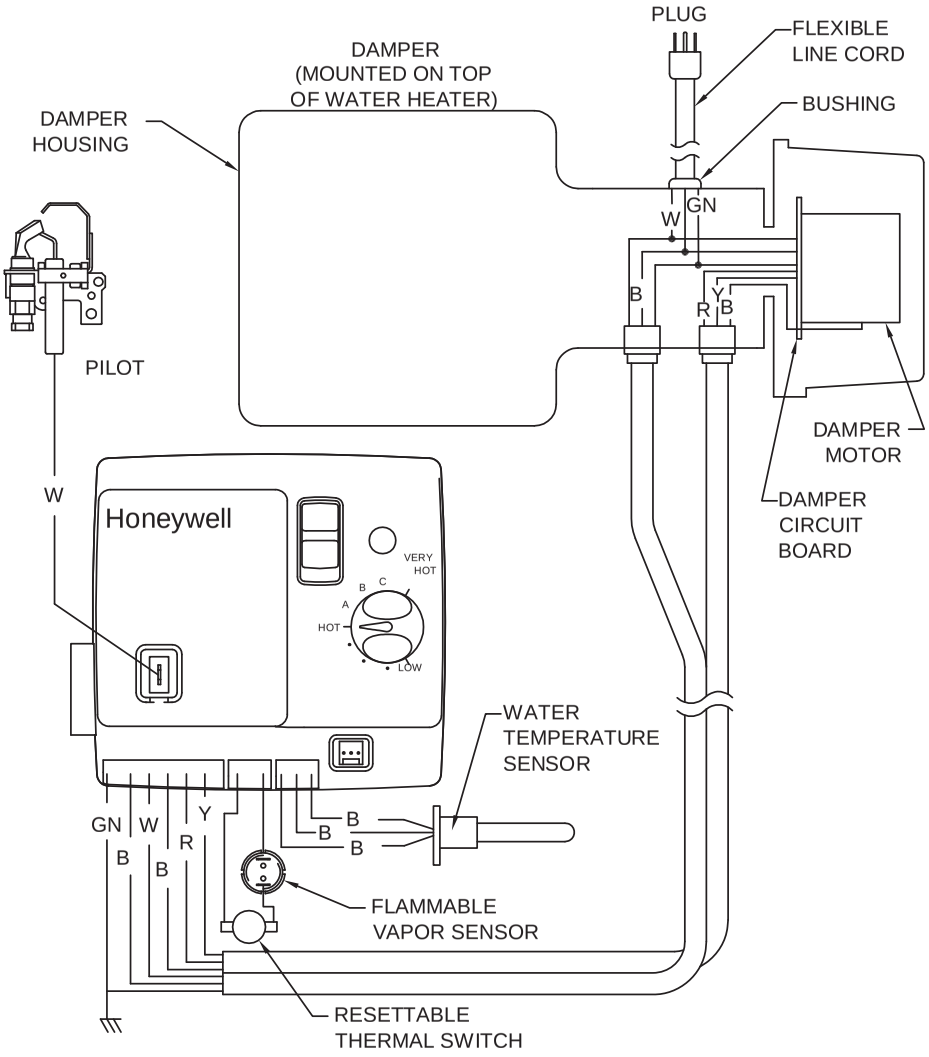

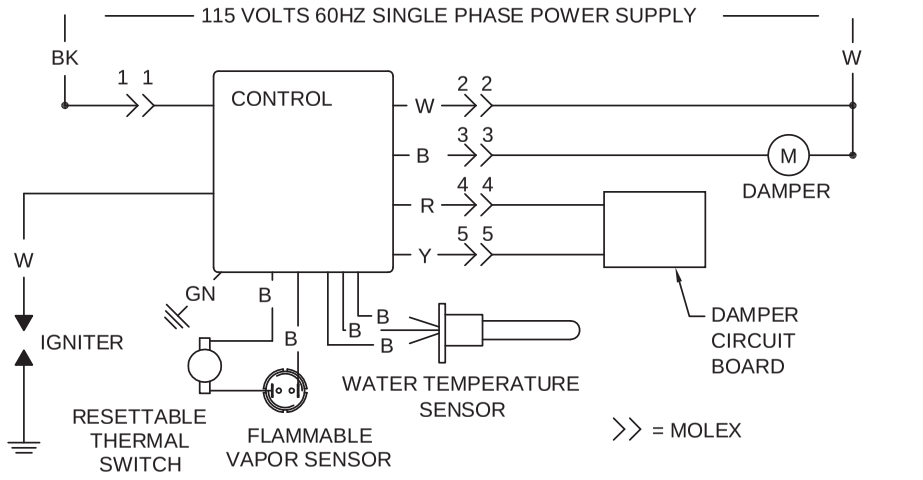

ELECTRICAL RATING
115 VOLTS 60HZ LESS THAN 12 AMPS

IF ANY OF THE ORIGINAL WIRES SUPPLIED WITH THE APPLIANCE MUST BE REPLACED, IT MUST BE REPLACED WITH APPLIANCE WIRE MATERIAL WITH A MINIMUM TEMPERATURE RATING OF 105°C AND A MINIMUM SIZE OF NO. 18 AWG.

GENERAL OPERATION

⚠ WARNING

Water heaters are heat producing appliances. To avoid damage or injury, there must be no materials stored against the water heater or vent-air intake system, and proper care must be taken to avoid unnecessary contact (especially by children) with the water heater and vent-air intake system. UNDER NO CIRCUMSTANCES SHALL FLAMMABLE MATERIALS, SUCH AS GASOLINE OR PAINT THINNER BE USED OR STORED IN THE VICINITY OF THIS WATER HEATER, VENT-AIR INTAKE SYSTEM OR IN ANY LOCATION FROM WHICH FUMES COULD REACH THE WATER HEATER OR VENT-AIR INTAKE SYSTEM.

To Fill the Water Heater:

1. Close the water heater drain valve by turning the knob clockwise.
2. Open the cold water supply shut-off valve.
3. Open several hot water faucets to allow air to escape from the system.
4. When a steady stream of water flows from the faucets, the water heater is filled. Close the faucets and check for water leaks at the water heater drain valve, combination temperature and pressure relief valve, and the hot and cold water connections.

To Drain the Water Heater:

Should it become necessary to completely drain the water heater, make sure you follow the steps below:

1. Shut off the gas supply to the water heater.
2. Turn off/disconnect all electric power to the water heater.
3. Close the cold water supply shut-off valve.
4. Open the drain valve on the water heater by turning the knob counter-clockwise. The drain valve has threads on the end that will allow the connection of a standard hose coupling.
5. Open a hot water faucet to allow air to enter the system.

To refill the water heater, refer to “To Fill the Water Heater.”

Lighting and Shutdown Instructions

FOR YOUR SAFETY READ BEFORE LIGHTING

WARNING: If you do not follow these instructions exactly, a fire or explosion may result causing property damage, personal injury or loss of life.

A. This appliance is equipped with an ignition device which automatically lights the pilot. Do not try to light the pilot by hand.

B. BEFORE OPERATING smell all around the appliance area for gas. Be sure to smell next to the floor because some gas is heavier than air and will settle to the floor.

WHAT TO DO IF YOU SMELL GAS

- Do not try to light any appliance.
- Do not touch any electrical switch; do not use any phone in your building.
- Immediately call your gas supplier from a neighbor's phone. Follow the gas supplier's instructions.
- If you cannot reach your gas supplier, call the fire department.

C. Use only your hand to slide the gas control switch. Never use tools. If the switch cannot be moved by hand, do not try to repair it, call a service technician. Force or attempted repair may result in a fire or explosion.

D. Do not use this appliance if any part has been under water. Immediately call a qualified service technician to inspect the appliance and to replace any part of the control system and any gas control which has been under water.

OPERATING INSTRUCTIONS

1. STOP! Read the safety information above.
2. Turn off all electric power to the appliance.
3. Set the thermostat to the lowest setting.
4. This appliance is equipped with an ignition device which automatically lights the pilot. Do not try to light the pilot by hand.

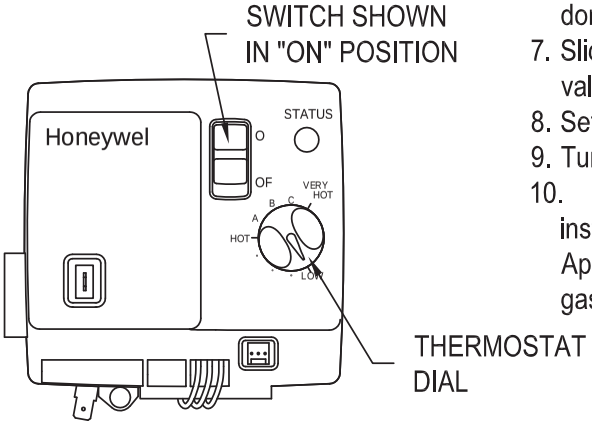

5. Slide the switch on the right side of the gas valve down to the "OFF" position.
6. Wait five (5) minutes to clear out any gas. Then smell for gas, including near the floor. If you smell the gas, STOP! Follow "B" in the safety information at left on this label. If you don't smell gas, go to the next step.
7. Slide the switch on the right side of the gas valve up to the "ON" position.
8. Set the thermostat to the desired setting.
9. Turn on all electric power to the appliance.
10. If the appliance will not operate, follow the instructions 'To Turn Off Gas To The Appliance" and call your service technician or gas supplier.

TO TURN OFF GAS TO THE APPLIANCE

1. Turn off all electric power to the appliance if service is to be performed.
2. Set the thermostat to the lowest setting.
3. Slide the switch on the right side of the gas valve down to the "OFF" position.

Thermostat Adjustments

The thermostat dial is adjusted to its lowest setting when shipped from the factory. When adjusting the thermostat, it should be remembered that lower temperature settings are more energy efficient. To adjust the thermostat, turn the dial clockwise until the minimum acceptable temperature is set. It is suggested that the starting point setting not exceed the 120°F *(49°C)* or "HOT" setting on the thermostat.

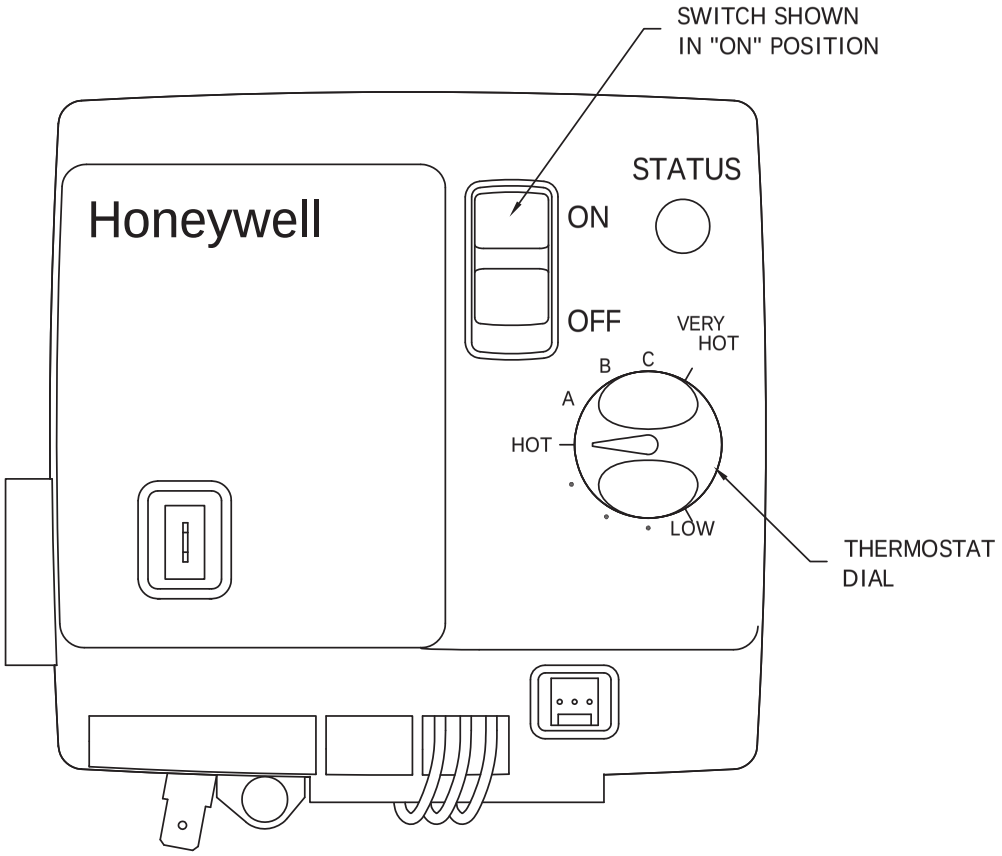

Figure 3. Gas Valve.

The thermostat dial is set to its lowest temperature setting when shipped from the factory. Remember that lower temperature settings are more energy efficient. Adjust the temperature by turning the thermostat dial. It is suggested that the starting point setting not be greater than the "Hot" mark on the thermostat dial (approximately 120°F [*48.9°C*]). Rotate the thermostat dial counter-clockwise ↺ to <u>decrease</u> the temperature setting. Rotate the thermostat dial clockwise ↻ to <u>increase</u> the temperature setting. Adjust the dial until the minimum acceptable temperature is achieved.

⚠ DANGER

Hotter water increases the risk of scald injury. Scalding may occur within five (5) seconds at a temperature setting of 140°F *(60°C)*. To protect against hot water injury, install an ASSE approved mixing valve in the water system. This valve will reduce point of discharge temperature by mixing cold and hot water in branch water lines. A licensed plumbing professional or local plumbing authority should be consulted.

Note: This water heater is equipped with an energy cut out device to prevent overheating. Should overheating occur or the gas supply fails to shut off, turn off the manual gas control valve to the water heater, and call a qualified service technician.

Note: Whenever the water heater is filled with cold water, condensate will form on the cool tank surface and drops of water will fall on the hot burner and combustion chamber surfaces producing a “sizzling” noise. Condensation is normal and does not indicate a leak. It will disappear when the tank becomes heated.

Burner Flame Check

Steel Burner: These models are equipped with self adjusting air mixture and do not have an adjustable air shutter (See Figure 4). At periodic intervals, a visual check of the main burner and pilot flames should be made to determine if they are burning properly. The main burner flame should light smoothly from the pilot.

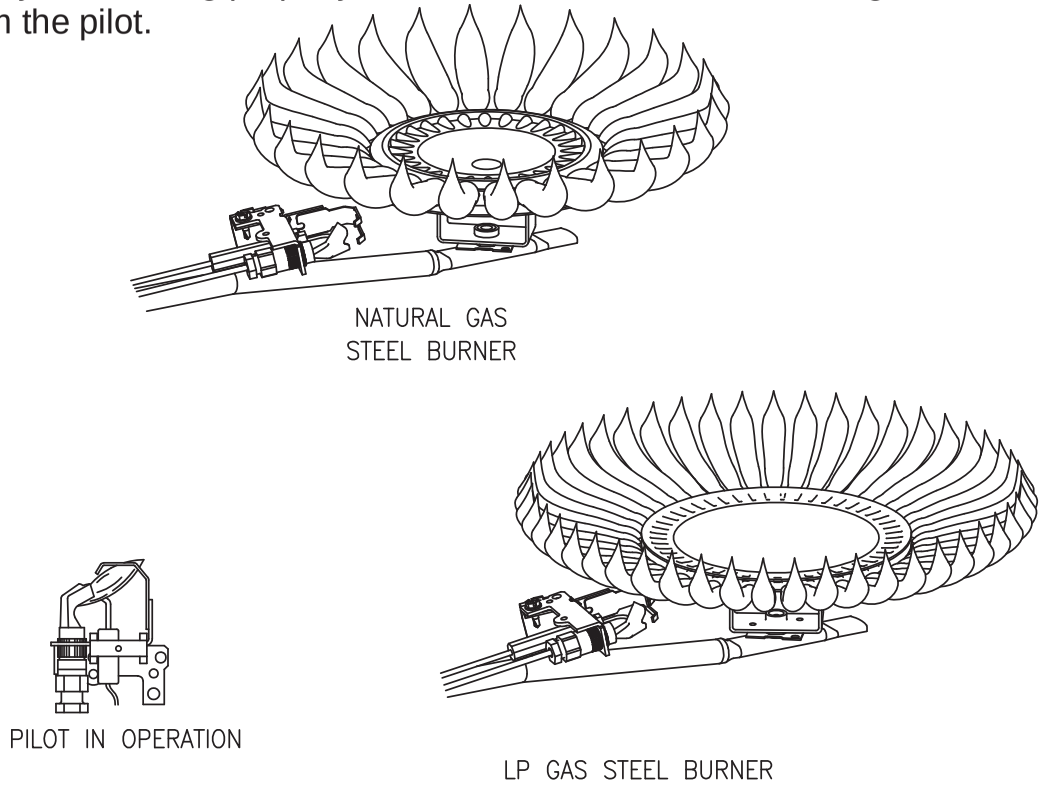

Figure 4. Burner and Pilot Assembly Used.

⚠ WARNING

Do not run out of propane gas. Damage to the water heater may occur.

MAINTENANCE

⚠ WARNING

Water heaters are heat producing appliances. To avoid damage or injury, there must be no materials stored against the water heater or vent-air intake system, and proper care must be taken to avoid unnecessary contact (especially by children) with the water heater and vent-air intake system. UNDER NO CIRCUMSTANCES SHALL FLAMMABLE MATERIALS, SUCH AS GASOLINE OR PAINT THINNER BE USED OR STORED IN THE VICINITY OF THIS WATER HEATER, VENT-AIR INTAKE SYSTEM OR IN ANY LOCATION FROM WHICH FUMES COULD REACH THE WATER HEATER OR VENT-AIR INTAKE SYSTEM.

The following maintenance should be performed by a qualified service technician at the minimum periodic intervals suggested below. In some installations, the maintenance interval may be more frequent depending on the amount of use and the operating conditions of the water heater. Regular inspection and maintenance of the water heater and vent-air intake system will help to insure safe and reliable operation.

1. Annually check the operation of the thermostat.

2. The flow of combustion and ventilation air MUST NOT be restricted. Make sure slots in the jacket are open and unobstructed. Clear jacket slot openings of any dirt, dust, or other restrictions.
   WARNING! The ventilation air system may be HOT.

IMPORTANT

The water heater should be inspected at a minimum annually by a qualified service technician for damaged components and/or joints not sealed. DO NOT operate this water heater if any part is found damaged or if any joint is found not sealed.

3. At all times, keep the water heater area clear and free from combustible materials, gasoline, and other flammable vapors and liquids.

4. Bi-annually conduct a visual check of the main and pilot burner flames to determine that they are burning properly. See the Burner Flame Check section of this Installation and Operation manual. If sooting or other burner anomalies are evident, shut down the water heater by turning off the gas per the instructions listed in this manual or as listed on the water heater.

Maintenance continued-

5. Annually remove the inner door and main burner assembly to clean orifices and related parts of any dirt or other foreign material. Inspect the burner ports for obstructions or debris and clean with a wire brush as needed. Wire brush and/or vacuum clean the combustion chamber as needed to remove scale deposits and debris. NOTE: It is imperative for proper operation of the water heater that the inner door be replaced in the original location, making certain the resettable thermal switch is properly connected to the gas control wire leads provided.

⚠ WARNING

- Do not block or in any way restrict jacket air inlet slots located at the bottom front of the water heater.
- Do not operate water heater with jumpered, altered, loosely tightened or absent controls and/or components.
- Do not operate water heater with replacement controls and/or components which are not exact duplicates of original equipment.
- Thoroughly inspect and replace, (as needed) burner inner door gasket and/or sight window gasket any time burner inner door is removed or disturbed.
- Replace water heater if involved in flammable vapor incident.
- This water heater is equipped with a flammable vapor sensor. If the sensor is exposed to flammable vapor, the water heater control will shut down the water heater and display a code of 7 flashes and then a 3 second pause.
- If a 7 flash error code is present, check to see if flammable vapor is present in the area. If flammable vapor is present or suspected in the area, immediately leave the area and contact a service professional.
  - Do not try to light any appliance.
  - Do not touch any electric switch; do not use any phone in your building.
- If you are certain there is no flammable vapor present, check the flammable vapor sensor to make certain it has not become disconnected from the control.
- See the instruction manual for troubleshooting.

⚠ WARNING

Do not run out of propane gas. Damage to the water heater may occur.

6. At least once a year, check the combination temperature and pressure relief valve to ensure that the valve has not become encrusted with lime. Lift the lever several times until the valve seats properly without leaking and operates freely.

7. Monthly drain off a gallon of water to remove silt and sediment.

⚠ WARNING

This water may be hot.

8. If the combination temperature and pressure relief valve on the water heater discharges periodically, this may be due to thermal expansion in a closed water supply system. Contact the water supplier or local plumbing inspector on how to correct this situation. Do not plug the combination temperature and pressure relief valve outlet.

⚠ WARNING

When lifting the lever on the combination temperature and pressure relief valve, hot water will be released under pressure. Be careful that any released water does not result in bodily injury or property damage.

9. A combination sacrificial anode rod/hot water outlet nipple has been installed to extend tank life. The anode rod should be inspected periodically (at least every 2 years) and replaced when necessary to prolong tank life. Water conditions in your area will influence the time interval for inspection and replacement of the anode rod. Contact the plumbing professional who installed the water heater or the manufacturer listed on the rating plate for anode replacement information. The use of a water softener may increase the speed of anode consumption. More frequent inspection of the anode is needed when using softened (or phosphate treated) water.

10. The vent system must be inspected at least once a year to ensure against leakage of exhaust products.

⚠ CAUTION

FOR YOUR SAFETY, DO NOT ATTEMPT REPAIR OF COMBINATION GAS CONTROL, BURNERS, OR GAS PIPING. REFER REPAIRS TO A QUALIFIED SERVICE TECHNICIAN.

Contact your supplier or plumbing professional for replacement parts or contact the company at the address given on the rating plate of the water heater.

Provide the part name, model and serial numbers of the water heater when ordering parts.

READ THE WARRANTY FOR A FULL EXPLANATION OF THE LENGTH OF TIME THAT PARTS AND THE WATER HEATER ARE WARRANTED.

Manufactured under one or more of the following U.S. Patents: RE. 34,534; B1 5,341,770; 4,416,222; 4,628,184; 4,669,448; 4,672,919; 4,808,356; 4,829,983; 4,861,968; 4,904,428; 5,000,893; 5,023,031; 5,052,346; 5,081,696; 5,092,519; 5,115,767; 5,199,385; 5,277,171; 5,372,185; 5,485,879; 5,574,822; 5,596,952; 5,660,165; 5,682,666; 5,761,379; 5,943,984; 5,954,492; 5,988,117; 6,142,216; 6,684,821; 7,007,748 7,063,132; Other U.S. and Foreign patent applications pending.
Current Canadian Patents: 1,272,914; 1,280,043; 1,289,832; 2,045,862; 2,092,105; 2,107,012; 2,108,186; 2,112,515

Complete the following information and retain for future reference:

Model No:_____

Serial No:_____

Service Phone
Days: _____ Nights:_____

Address:_____

Supplier:_____

Supplier Phone No: _____

TROUBLESHOOTING

LED Status	Control Status	Probable Cause
None (LED not on or flashing)	Electrical power not present	Control power switch in "OFF" position. Supply voltage interrupted.
One short flash every four seconds	Stand-by mode, Thermostat is satisfied (no faults)	Temperature demand is satisfied (no call for heat)
Alternates bright and dim (heartbeat)	Thermostat calling for heat (no fault)	Tank temperature below setpoint of thermostat
Short flash once every second	Weak pilot signal on last call for heat	1. Unstable pilot 2. Pilot tube blocked or restricted 3. Oxidation build-up on pilot electrode 4. Wire damage to pilot assembly or bad connection at gas valve
Two flashes, three second pause	Damper test circuit not working	1. Damper not in proper position or malfunctioning - stuck in open position 2. Obstructed venting 3. Faulty damper
Three flashes, three second pause	Damper test circuit not working	1. Damper not in proper position or malfunctioning - not reaching full open position 2. Obstructed venting 3. Faulty damper
Four flashes, three second pause	Excessive tank temperature, system must be reset	1. Thermal well sensor out of calibration 2. Faulty gas valve
Five flashes, three second pause	False pilot flame present	Pilot valve stuck in open position
Six flashes, one flash, three second pause (Soft Lockout)	Failed to light pilot, system resets after (5) minutes	1. Unstable pilot 2. Pilot tube block or restricted 3. Oxidation build-up on pilot electrode 4. Wire damage to pilot assembly or bad connection at gas valve

Troubleshooting continued-

LED Status	Control Status	Probable Cause
Six flashes, two flashes, three second pause (Soft Lockout)	Damper test circuit not working properly during burner operation, system auto resets after (5) minutes	1. Damper not in proper position or malfunctioning - damper moved from full open position during run cycle 2. Obstructed venting 3. Faulty damper 4. Damper jostled during run cycle
Six flashes, three flashes, three second pause (Soft Lockout)	Pilot flame extinguished, system auto resets after (5) minutes	1. Unstable pilot 2. Pilot tube block or restricted 3. Oxidation build-up on pilot electrode 4. Wire damage to pilot assembly or bad connection at gas valve 5. Insufficient combustion air
Six flashes, four flashes, three second pause	Undesired false pilot flame sensed, system auto resets	Pilot valve stuck in open position
Seven flashes, three second pause	Flammable vapor sensor or resettable thermal switch fault detected, see warning label	1. Flammable vapor present 2. Flammable vapor sensor exposed to excessive moisture 3. Flammable vapor sensor exposed to extreme ambient temperature 4. Resettable thermal switch open
Eight flashes, one flash, three second pause	Flammable vapor sensor out of specification, possible short	1. Flammable vapor sensor out of specification 2. Possible short in flammable vapor sensor or resettable thermal switch wiring
Eight flashes, three flashes, three second pause	Thermal well sensor damaged or unplugged or gas valve electronics fault detected	1. Damage to thermal well wires 2. Thermal well sensor resistance out of range 3. Replace thermal well 4. Verify control is not wet or physically damaged 5. Reset control on/off switch 6. Replace electronic module if 8-3 error persists
Eight flashes, four flashes, three second pause	Gas valve fault detected	1. Verify control is not wet or physically damaged 2. Reset control on/off switch 3. Replace gas control if 8-4 error persists

Fault	Probable Cause
Resettable Thermal Switch Tripped (Open)	1. Insufficient combustion air 2. Flammable vapor present

Control Sequence of Operation

Start up Sequence

Upon powering up, the control checks for the presence of the flammable vapor sensor, if the resistance is in the expected range the control will begin normal operation after 5 to 8 seconds.

Normal Heating Sequence

1. The thermostat senses a need for heat.
2. The damper test circuit checks the position of the damper.
3. If the damper is open, and starts the ignition process by providing a spark at the pilot electrode and allowing gas to flow to the pilot.
4. When the pilot is lit the gas control senses the pilot flame and opens the main gas valve.
5. The main burner is lit.
6. The main burner (damper in open position) continues to operate until the thermostat is satisfied.
7. When the thermostat is satisfied the main and pilot gas valves close.
8. The damper remains open for a short period before closing.

The water heater remains in the stand-by mode until the next call for heat.

INSTALLATION FOR POTABLE WATER

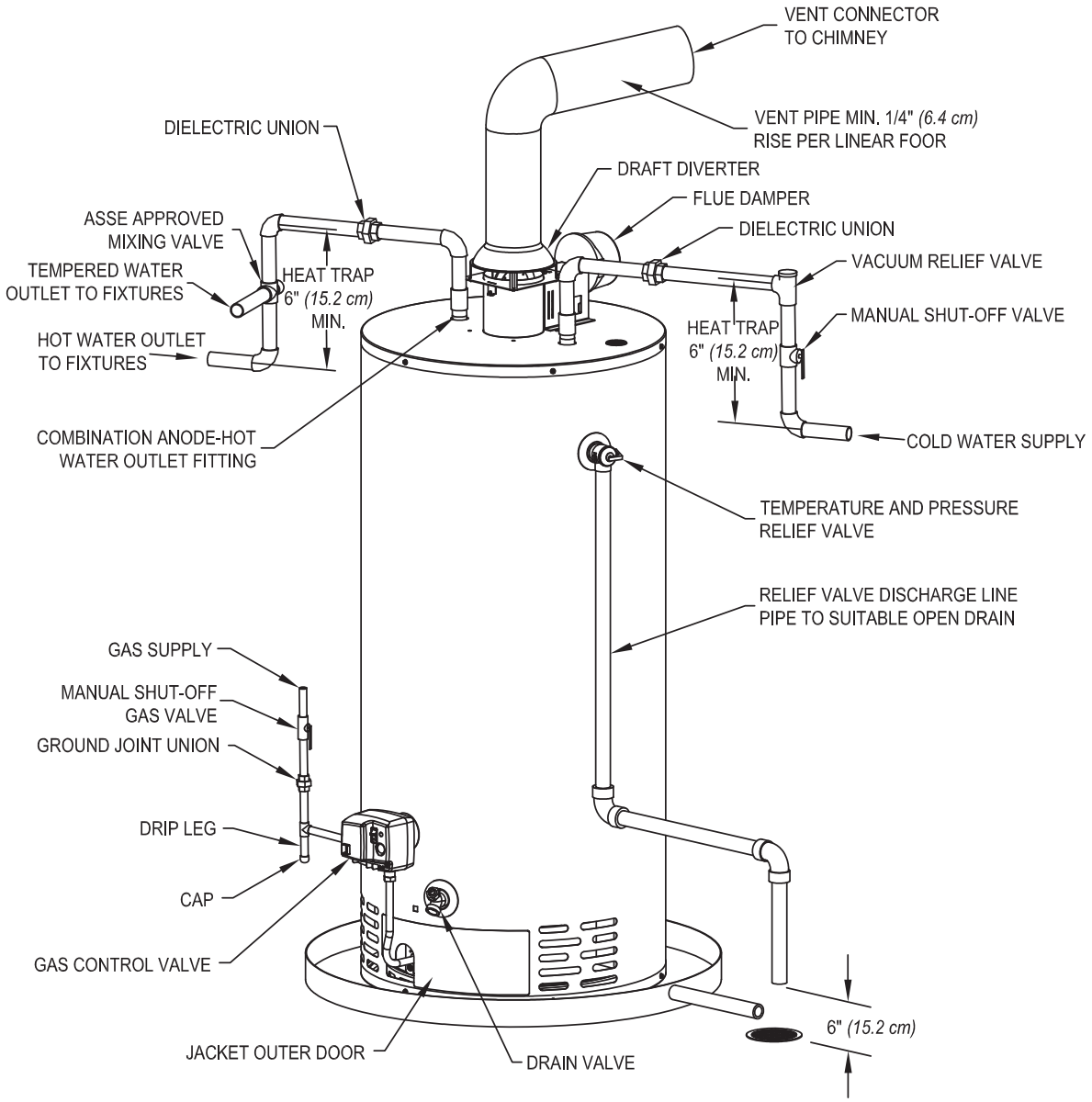

Figure 5

PARTS LIST DRAWING

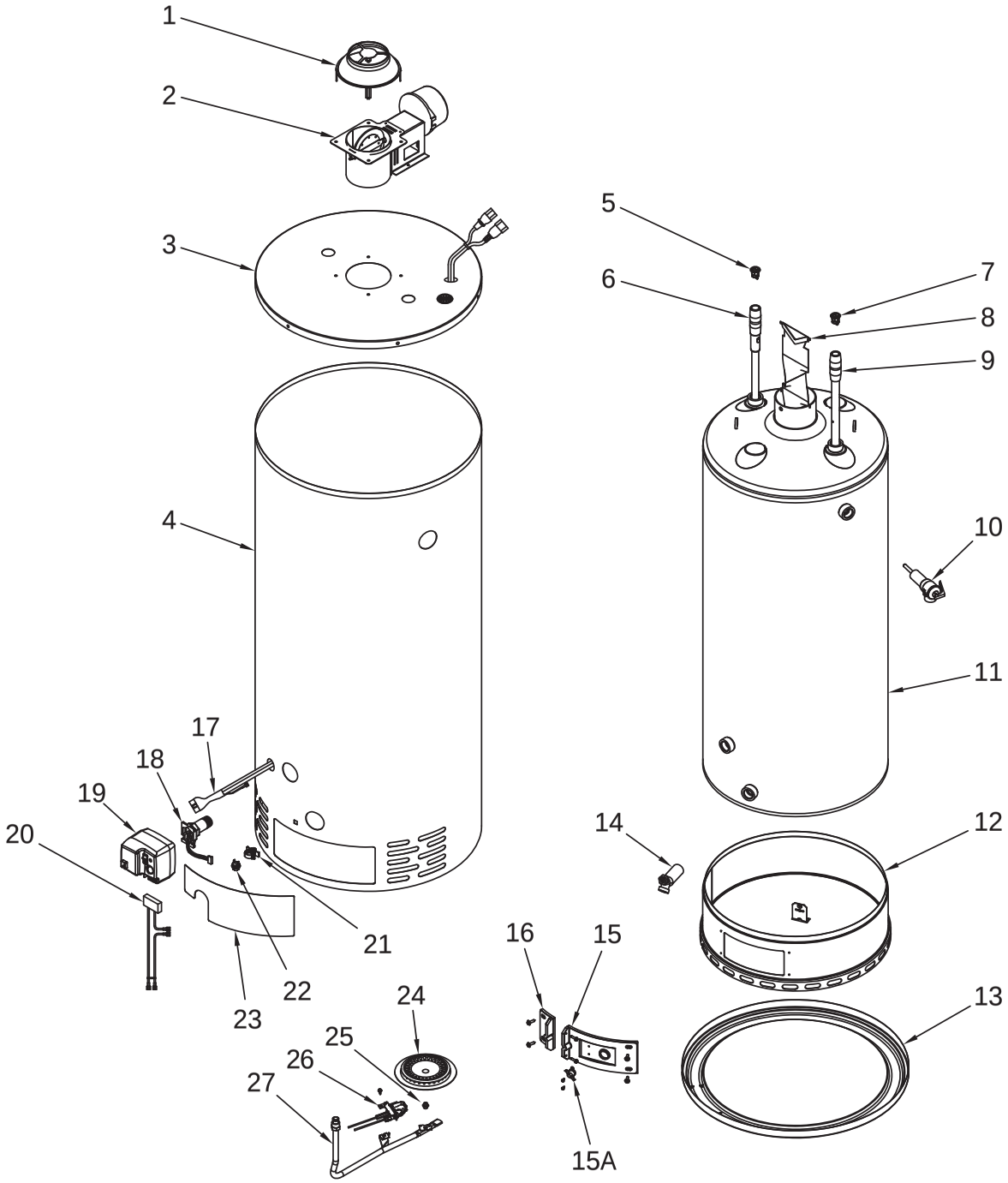

Figure 6

PARTS LIST

PART NAME AND DESCRIPTION	
1. Draft Hood	15. Inner Door Assembly (Right)
2. Damper	15A. High Temperature Limit Switch
3. Jacket Head Pan	16. Inner Door (Left)
4. Jacket	17. Damper Wire Harness
5. Heat Trap—Cold Water Inlet	18. Thermal Well
6. Magnesium Anode–Hot Water Outlet	19. Gas Control Valve
7. Heat Trap—Cold Water	20. Wire Harness (FVIR / RTS)
8. Flue Baffle Assembly	21. FVIR Sensor Clip
9. Dip Tube–Cold Water Inlet	22. FVIR Sensor
10. Temperature and Pressure Relief Valve	23. Outer Door
11. Glass Lined Tank	24. Steel Burner
12. Combustion Chamber Assembly	25. Orifice
13. Jacket Base Pan	26. Pilot Assembly
14. Drain Valve	27. Feedline

INSTALLATION INSTRUCTIONS FOR POTABLE WATER AND SPACE HEATING

1. All piping components connected to this water heater for space heating applications must be suitable for use with potable water. In Massachusetts, space heating piping length must not exceed 50 feet *(15.2 m).*
2. Toxic chemicals, such as those used for boiler treatment, must not be introduced into potable water used for space heating.
3. This water heater must not be connected to an existing heating system or component(s) previously used with a non-potable water heating appliance.
4. When the system requires water for space heating at temperatures higher than required for other means, an ASSE approved mixing valve must be installed to temper the water for those uses in order to reduce the scald hazard potential.

Please refer to Figure 7 for suggested piping arrangements.

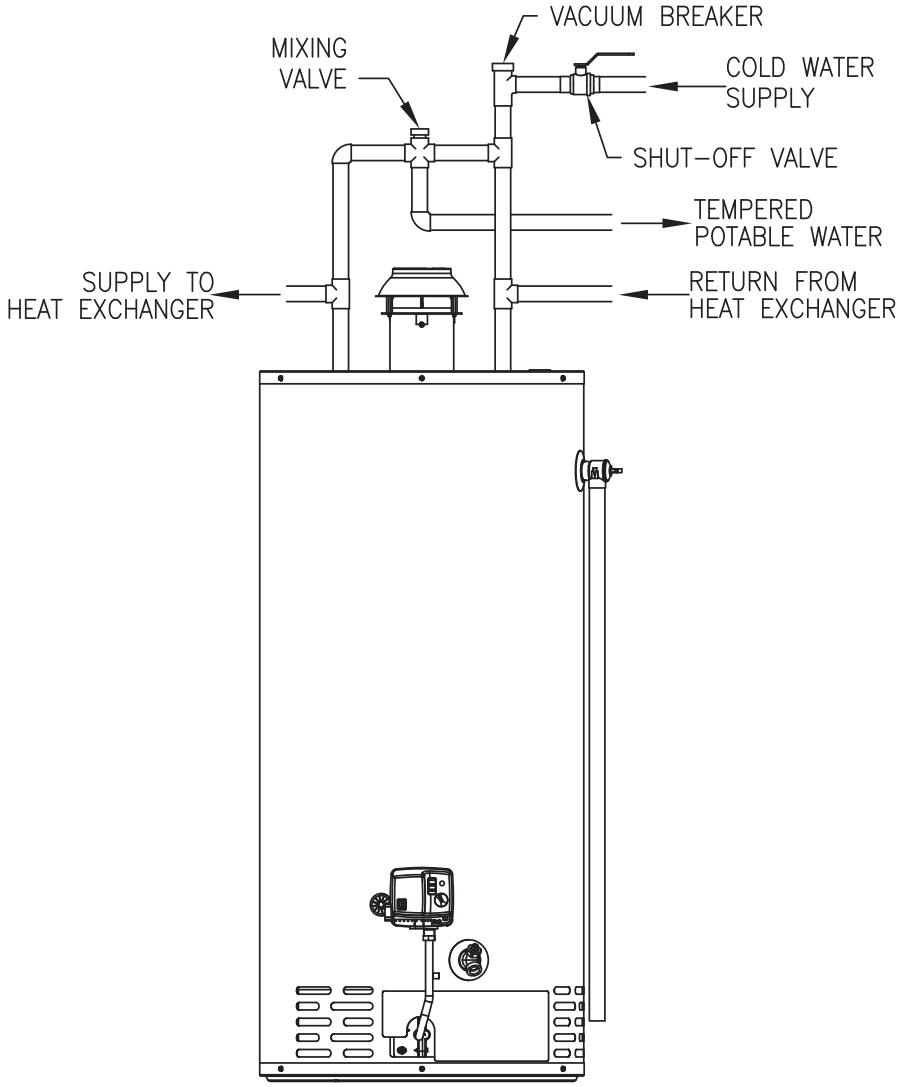

Figure 7

NOTES

NOTES