Update on PCTs (Programmable Communicating Thermostat)

DOCKET
07-BSTD-1
DATE JUL 12 2006
RECD. APR 29 2008

Mazi Shirakh, PE

July 12, 2006

PIER 2/16/06 Workshop

- **Over the past year three PIER workshops on system integration (SI) issues related to AMI (Advanced Metering Infrastructure) & PCT (Programmable Communicating Thermostats) interfaces (I/Fs)**

Stakeholder Meetings

- **Stakeholders Participating Included**
  - IOUs
  - Munis
  - thermostat manufacturers
  - Commission staff
  - others

Project Status

- **Commission and IOUs agree on many points including:**
  - Responding to emergency signals – offset of 4 degrees F, cannot be overridden by user
  - Responding to price signals – offset of 4 degrees F, can be overridden by user
  - External port's – capable of receiving external modules which will enable various communication modes and other features
  - Common user interface (LCD, LED) – provides information to the user such as the type of DR event and the status of the device
  - Standardized equipment connector – for ease of installation and minimizing installation errors

Project Status

- **Issues Requiring Continued Discussion – Two Alternative Modes for Communication:**
  - One-way communication on the PCT and enabled – allows Munis and others to use one-way communication for DR events without further effort. May also be used for backup to two-way communication. Two-way communication will be enabled thru the external port which disables the one-way mode.
  - No default one or two-way communication on the PCT – the external port will be used to enable either the one-way or the two-way communications, depending on the utilities choice.

Proof of Concept

- **Once the utilities and the Commission agree upon a PCT concept, Ron Hofmann and the Berkeley group (PIER Contractors) will develop prototype hardware and proof of concept, and answer all remaining technical questions**

PCT Concept

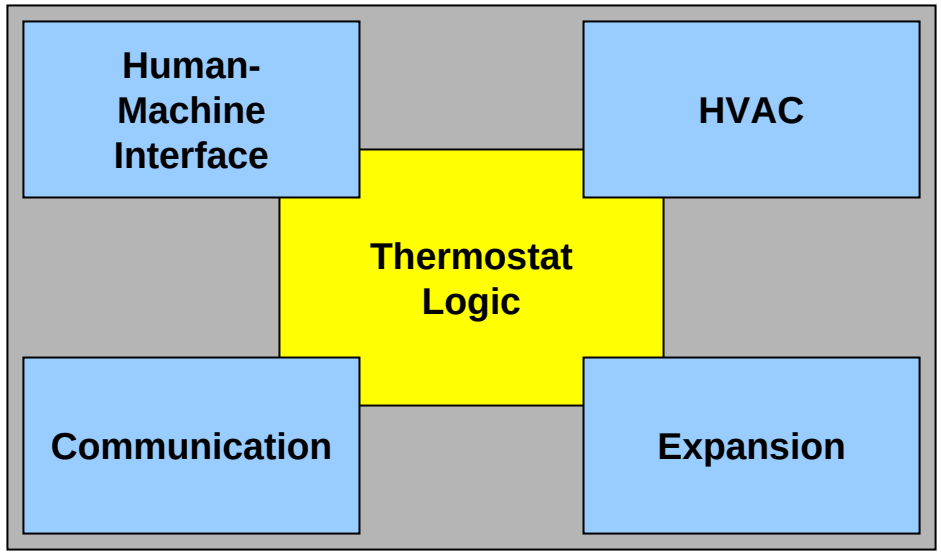
Human-
Machine
Interface
HVAC
Thermostat
Logic
Communication
Expansion

Proof-of Concept Prototype

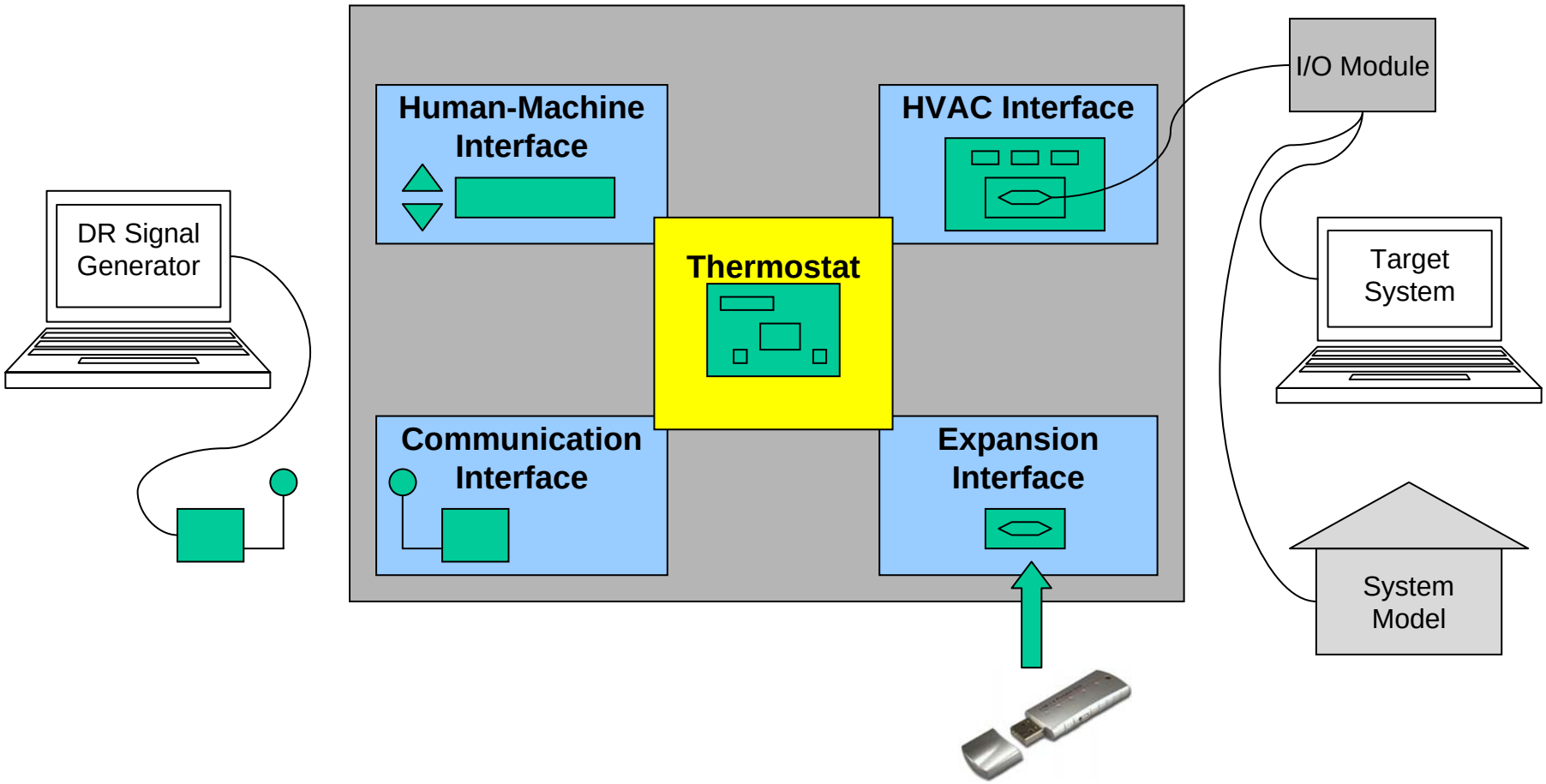

PCTs Update

Questions?