Occidental Petroleum Corporation

10889 Wilshire Boulevard, Los Angeles, California 90024
Phone 310.443.6304 • Fax 310.443.6333
elliott_heide@oxy.com

Elliott Heide
Assistant General Counsel

DOCKET
08-AFC-8
DATE APR 30 2010
RECD. APR 30 2010

April 30, 2010

VIA OVERNIGHT COURIER

Rod Jones, Project Manager
California Energy Commission
1516 Ninth Street, MS 4
Sacramento, CA 95814-5515

Re: Hydrogen Energy California Project Siting Application

Dear Mr. Jones:

As requested, enclosed are five hard copies of the data which Occidental originally submitted to you on CDs under an April 15, 2010 letter.

Also enclose on a CD is a PDF version of the Sample Class II Permit included in our April 15 submission. Please contact me if you need anything additional to complete our submission.

Sincerely,

Elliott Heide

Enclosures

CO_2/EOR Process

1. What is the nexus between enhanced oil recovery and sequestration as it pertains to Oxy's proposal?

Geologic "sequestration" is a term commonly used to describe the physical and chemical process that results in the trapping of a fluid or gas within a geologic formation. Enhanced oil recovery ("EOR") involves the injection of fluids or gases into a hydrocarbon-bearing geologic formation for the purpose of facilitating oil production. As described more fully below, the EOR process using CO_2 as an injectant results in sequestration of the injected CO_2.

The HECA project involves the capture of CO_2 from an integrated gasification combined cycle power generating facility and the compression and transport of such CO_2 to Occidental of Elk Hills, Inc. ("OEHI"). OEHI operates a large, mature oil production field in the Elk Hills Unit near Bakersfield, California (approximately 4 miles from the HECA project) and is proposing to extend existing EOR operations at the Elk Hills Unit by using CO_2 from the HECA project to facilitate oil production (the "OEHI CO_2 EOR Project").

The OEHI CO_2 EOR Project will improve oil recovery at the Elk Hills Unit through the use of a closed-loop system involving surface and subsurface facilities for injection, production, processing, separation, compression and reinjection of CO_2. The injected CO_2 – which is in a fluid-like state – reduces the viscosity and enhances mobility of oil to improve extraction. CO_2 is not emitted into the atmosphere during the CO_2 EOR process or after operations cease, other than de minimis fugitive losses from equipment, theoretical operational upsets, and well maintenance. Injected CO_2 becomes physically sequestered in pore space voided by oil and other fluids produced in the EOR operation, as well as through other geochemical trapping mechanisms.

During the operational phase of an EOR project, some volume of CO_2 that has been injected into an oil-bearing target formation through injection wells is extracted (along with hydrocarbons and other gases and fluids) through production wells. Injected CO_2 that is subsequently extracted remains a valuable commodity and is not vented to the atmosphere. Instead, using a closed-loop system, it is separated from the hydrocarbons and other extracted gases and fluids, and then reinjected into the oil-bearing target formation for additional EOR use. With every injection cycle 30-50 percent of the injected CO_2 volume becomes sequestered in the target formation, making it unrecoverable. Due to the high fraction trapped on each pass, it takes only a few cycles for essentially all of the initial amount of injected CO_2 to become completely sequestered. For example, if half of the amount of injected CO_2 is sequestered on each recycle pass, by the tenth cycle, more than 99.8% of the initial amount of injected CO_2 would be sequestered.

The trapping effect is an unavoidable characteristic of the CO_2 EOR process, one that creates a persistent demand for additional CO_2 over the course of the EOR operation. This predictable demand and geologic permanence is why CO_2 EOR is an ideal technology for sequestering CO_2 emissions.

2. **What percentage of the injected carbon dioxide remains trapped in the oil wells/rock formation during the CO_2 EOR process, and is it considered sequestration?**

   As described more fully above, geologic sequestration of fluids and gases is a physical and chemical process, and CO_2 EOR results in sequestration of CO_2. During the life of a CO_2 EOR project, injected CO_2 is either trapped in the subsurface or contained within the above-ground facilities. While some volume of CO_2 could be lost in above-ground processes due to equipment fugitive emissions, theoretical operational upsets, and well maintenance, these losses represent only a very small percentage in proportion to the total CO_2 stored. Following completion of CO_2 EOR operations, including decommissioning of wells, essentially all CO_2 injected over the life of the project will be trapped in the target formations and sequestered. For further discussion of this topic, please refer to the technical studies and academic white papers included with OEHI's April 15th submission.

3. **What percentage of CO_2 that is initially injected is expected to be captured and re-injected into the wells?**

   Approximately 50-70 percent of CO_2 injected in a target formation each cycle is captured and reinjected.

4. **Will the CO_2 EOR be operating 24 hours/ day?**

   The OEHI CO_2 EOR Project is expected to operate 24 hours per day during the life of the HECA project, subject to scheduled maintenance and unscheduled outages.

5. **What percentage of time over a year is the process expected to operate without interruption?**

   OEHI plans to have redundant injection facilities and wells and a backup target formation so that the OEHI CO_2 EOR Project can operate without interruption. Thus, as mentioned above, OEHI expects to operate the OEHI CO_2 EOR Project 24 hours per day during the life of the HECA project, subject to scheduled maintenance and unscheduled outages.

6. **How frequently will maintenance and overhaul activities be scheduled which could affect the CO_2 EOR process? Will Oxy still be able to take**

CO_2 when wells are closed for maintenance or an unexpected malfunction occurs?

In its existing operations, OEHI conducts maintenance and work-over activity on a regular and ongoing basis and plans to continue doing so throughout the life of the OEHI CO_2 EOR Project. Such activities are not expected to limit OEHI's ability to accept and inject all volumes of CO_2 delivered by HECA during the life of the HECA project. As indicated above, OEHI plans to have redundant injection facilities wells and target formations so that the OEHI CO2 EOR Project can operate without interruption.

Site Assessment

1. **What site characterization process (e.g., site assessment, subsurface characterization, etc.) will be used by Oxy to determine which wells will be used for the CO_2 EOR Project?**

   For more than 30 years, hydrocarbon gases and water have been used for EOR operations at the Elk Hills Unit in the same oil-bearing target formations that will be used for the OEHI CO_2 EOR Project. This operating history has demonstrated the confinement of such injectants to the target formations. In addition, OEHI's evaluation of risks associated with potential leakage pathways in the target formations has verified the appropriateness of the Elk Hills Unit for CO_2 injection and storage.

   OEHI's reservoir characterization work includes analysis of:

   - CO_2 injection pilot study that confirmed containment of CO_2 in the target Stevens reservoirs
   - Stratigraphy, structure, depth, thickness, pressure, porosity, geomechanical and fluid flow properties of the injection zones and confining zone
   - Sealing capacity of the confining zone (from petrophysical logs and seismic interpretation)
   - Natural and induced seismicity (See: HECA regional seismicity study for the Elk Hills Field in Appendix F of HEI AFC Application)
   - Transmissive faults and confirmation that none intersect the confining zone in areas where CO_2 injection occurs
   - Well construction and plugging history of all wells which penetrate the confining zone
   - Compositional analysis of injection and reservoir fluids
   - Computer simulation of CO_2 trapping mechanisms

2. **How many oil wells are expected to be used annually by Oxy for CO_2 EOR?**

   It is currently expected that there will be up to 38 injection wells and 56 production wells during the initial phase of the OEHI CO_2 EOR Project. In later phases of the project, OEHI expects to operate up to a total of 250 injection wells and 310 production wells annually.

3. **What would be the anticipated life-cycle of the wells used during CO_2 EOR?**

   With ongoing well maintenance and work-overs, OEHI expects that each well will continue in service for as long as hydrocarbon production from that well is economic. OEHI expects that the target formations will be economically producible for 30 or more years.

4. **What is the capacity of the wells to be injected with CO_2?**

   OEHI currently estimates that injection wells will be able to inject between 2-20 million cubic feet of CO_2 per day depending on well-specific reservoir permeability.

CO2 Transfer and Storage

1. **How many tons of CO_2 per year is projected to be transported through the CO_2 pipeline to the custody transfer point in the Elk Hills Field?**

   Approximately 2 million tonnes per year.

2. **What happens to any excess received from the HECA CO_2 pipeline and how would it be stored and used by Oxy?**

   OEHI will be able to accept and utilize all CO_2 produced from the HECA plant for the OEHI CO_2 EOR Project.

Monitoring, Mitigation, and Verification (MMV)

1. **What type of subsurface monitoring techniques (e.g., sensors) will be used by Oxy to manage the performance risks (e.g., containment, leakage, fracturing of cap rock, etc.), associated with CO_2 in the wells?**

   OEHI is working with credible and experienced NGO stakeholders to develop a proposed set of MMV criteria. The product of that effort will be submitted to the CEC for consideration in the course of the HECA siting process.

2. **What would be the average rate of damage caused to the wellhead and casing from high pressure injection of CO_2 into the wells?**

   Wellheads with CO_2 compatible metallurgy and corrosion-resistant coatings that are design-rated for the permitted injection pressure will be used on the injection wells, which will provide effective protection of wellhead and down-hole components over their service life. Casing in the injection wells is protected by cement on the exterior and the interior will be isolated from CO_2 by the injection packer. All producing wells, including wellheads, will have adequate design pressure rating and will be protected by the injection of corrosion inhibitor chemicals to maintain mechanical integrity.

3. **What practices and safety measures would be used to prevent or minimize injection of CO_2 to the non-target areas of the reservoir and surrounding geologic features at the Elk Hills Field?**

   Many practices and safety measures will be used to prevent or minimize injection of CO_2 to non-target areas, including perforating and stimulating injection wells in only the desired injection interval and conducting well surveys to ensure that injected CO_2 is entering the targeted Stevens reservoirs. In addition, the Elk Hills Unit benefits from the presence of numerous producing wells, including many wells producing from horizons above and below the Stevens reservoirs. These wells will act as observation points to provide immediate evidence of predicted and/or unpredicted subsurface CO_2 movement. Actual real-time data will be gathered from existing and new wellbores through the following processes:

   - Monitoring of wellhead and annular pressures of wells completed in the Stevens reservoirs, supplemented by downhole pressure and temperature where available
   - Monitoring of wellhead and annular pressures of wells completed in reservoirs vertically adjacent to the Stevens reservoirs, supplemented by downhole pressure and temperature measurements in these offset reservoirs where available
   - Well integrity monitoring, including cement bond logging upon initial well completion
   - Produced fluid compositional analysis

   OEHI will also engage in the following containment verification activities:

   - Characterization of rock stress and strength through acquired geomechanical data
   - Material Balance analysis
   - Monitoring plan for collection of subsurface pressure, reservoir fluid chemistry and other data as necessary to demonstrate and predict behavior of the injected CO_2

- A leak detection plan that will include monitoring of wells and produced fluids in reservoirs adjacent to the Stevens reservoirs to provide early detection of any CO_2
- Static and dynamic subsurface modeling to characterize migration of injected fluids through the reservoir. These three-dimensional, multiphase flow, numerical simulation models of the Elk Hills Field extend to sufficient depth to fully characterize the Stevens injection zone and confining zone and are of sufficient areal size to allow full characterization of the injected CO_2 and any associated pressure front resulting from the injection of CO_2 over the life of the OEHI CO_2 EOR Project. The models can be further described as follows:
    - A static model which accurately represents the pre-CO_2-injection, 3-dimensional subsurface geologic horizons characterized by distributed petrophysical properties (porosity, permeability, etc.) as well as their reservoir properties (fluid saturations, pressure, temp, solubility, etc.), significant faults and their transmissivities (those which could compartmentalize the injection zone or act as a leakage pathway), and location of injection and production wells.
    - A dynamic model, which utilizes the static model for a starting point and accounts for the injection of CO_2 and the production of hydrocarbons over the life of the OEHI CO_2 EOR Project, run at sufficient time intervals to demonstrate the movement of CO_2 and the pressure front over time, and run until the CO_2 and pressure front stabilizes and injection zone pressure is insufficient to push CO_2 into any adjacent geologic horizons.

Stewardship

1. Who will have ownership of the pore space, mineral rights, etc. associated with the CO_2 EOR process?

OEHI is the majority owner (78 percent) of the Elk Hills Unit, and Chevron owns the remaining 22 percent. OEHI is the exclusive operator of the Elk Hills Unit on behalf of Occidental and Chevron.

Mineral interest ownership is typically the dominant ownership interest in real property. Mineral interest owners are generally entitled to access and use the mineral-bearing formation in any manner necessary to facilitate exploitation of minerals. For EOR operators, this ownership interest includes the right to use and occupy pore space with fluid or gas injectants for the purpose of enhanced hydrocarbon production. In addition, the Elk Hills Unit owners own both the surface and mineral interests for the entire area encompassing the target injection formation.

2. **At the end of the active operation when the CO_2 supply is finished, how will Oxy decommission the wells?**

   OEHI will decommission the wells in accordance with the appropriate DOGGR regulations and any additional conditions accepted by OEHI to enable the permitting and operation of the HECA project.

3. **What technologies and procedures will Oxy use to ensure long-term isolation, as well as monitor and insure the CO_2 storage integrity?**

   Please refer to OEHI's responses to the questions above relating to MMV.

4. **How will long-term liability issues associated with CO_2 storage be addressed?**

   Any "long-term liability" associated with CO_2 EOR that results in sequestration is indistinguishable from that which may exist for other EOR projects involving fluid or gas injection. As such, OEHI believes existing regulatory and liability mechanisms adequately address concerns about any long-term liability associated with OEHI's proposed CO_2 EOR activities.

5. **What measure will Oxy use to monitor the storage site and how long after site closure does Oxy expect to continue monitoring?**

   Please refer to OEHI's responses to the questions above relating to MMV.

PRELIMINARY PROJECT DESCRIPTION (PRE-FEED STAGE)

CO_2 ENHANCED OIL RECOVERY AT THE ELK HILLS OIL FIELD

April 16, 2010

Prepared for:

Occidental of Elk Hills, Inc.
10800 Stockdale Highway
Bakersfield, California 93311

Prepared by:

ManageTech SOLUTIONS
5000 E. Spring Street
Suite 720
Long Beach, California 90815
P: 562-740-1060

1 Introduction and Project Overview 1

1.1 Project Benefits 6

1.2 Project Objectives 6

1.3 Project Ownership 7

1.4 Proposed Project Schedule 7

1.5 Location 7

1.6 Project Components 12

1.7 Site Plan 14

2 CO_2 Enhanced Oil Recovery 16

2.1 CO_2 EOR Process Overview 17

2.1.1 Subsurface Process Overview 17

2.1.2 Aboveground CO_2 Handling Process Overview 22

2.2 Site Selection and Geological Setting 24

2.2.1 General Elk Hills Structure and Geology 24

2.2.2 Summary of HECA Siting Study 31

2.2.3 Geologic CO_2 Trapping Capacity 32

2.3 CO_2 Handling Processes 34

2.3.1 CO_2 Injection and Recovery Equipment 38

2.3.1.1 CO_2 Supply System 38

2.3.1.2 Satellite Gathering Stations 38

2.3.1.3 Infield Gathering and Injection Distribution Flow Lines 39

2.3.1.4 Injection and Production Well Design Basis 41

2.3.2 Recovered CO_2 Purification and Compression 41

2.3.2.1 Central Tank Battery 41

2.3.2.2 Reinjection Compression Facility 42

2.3.2.3 CO_2 Recovery Plant 44

2.3.2.4 Water Treatment Plant 47

2.3.3 Backup CO_2 Injection Facility 48

3 Supporting Process Systems 49

3.1 Hazardous Material Management 49

3.2 Hazardous Waste Management 52

3.2.1 Hazardous Construction Waste 52

3.2.2 Hazardous Operations Waste 53

3.3 Stormwater Management 55

3.4 Fire Protection 56

3.5 Control Systems 56

3.6 Utilities 57

3.7 Project Buildings/Facilities 58

3.8 Security Systems 58

3.9 CO_2 Monitoring, Measurement, Verification and Closure 58
3.9.1 Monitoring, Measurement and Verification 58
3.9.2 CO_2 EOR Well Field Closure 60
4 Project Construction 61
5 Project Operation Scenarios 62
6 Facility Safety Design 63
6.1 Natural Hazards 67
6.1.1 Seismicity 67
6.1.1.1 Induced Seismicity 67
6.1.1.2 Naturally Occurring Seismicity 68
6.1.2 Floods 70
6.1.3 Wind Loads 70
6.2 Emergency Systems and Safety Precautions 70
6.2.1 Community and Stakeholder Awareness 70
6.2.2 Emergency Preparedness 71
6.2.3 Specific Project Emergency Systems 71
6.3 Technology Selection and Facility Reliability 72
6.3.1 Technology Selection 72
6.3.2 Facility Reliability 75
7 Compatibility with Laws, Ordinances, Regulations and Standards 76
7.1 Division of Oil, Gas and Geothermal Resources 76
7.2 Biological Resources 76
7.2.1 Endangered Species Act of 1973 77
7.2.2 California Endangered Species Act 77
7.2.3 Habitat Conservation Plan 78
7.2.4 Covered Species 78
7.2.5 OEHI Operations and Species Affects 79
7.3 Permits and Approvals 80
7.3.1 Clean Water Act Section 404 Permit 80
7.3.2 CWA Section 401 Water Quality Certification and Waste Discharge Requirements 80
7.3.3 San Joaquin Valley Air Pollution Control District 81
7.3.4 Groundwater and Water Quality 81
8 Alternatives 84
9 References 86

List of Acronyms
Glossary of Terms
Appendix A Detailed Section Maps

Tables

TABLE 1-1 Site Characteristics

TABLE 3-1 Hazardous Materials Usage and Storage during Operations

TABLE 3-2 Summary of Construction Waste Streams and Management Methods

TABLE 3-3 Summary of Operational Waste Streams and Management Methods

TABLE 7-1 Listing of Applicable Agencies

Figures

FIGURE 1-1 Elk Hills Oil Field Vicinity Map

FIGURE 1-2 CO_2 EOR Schematic

FIGURE 1-3 Elk Hills Oil Field Township/Range Naming Conventions Schematic

FIGURE 1-4 Elk Hills Oil Field in the Regional Context

FIGURE 1-5 Conceptual Plot Plan

FIGURE 2-1 Schematic of Miscible CO_2 Flood

FIGURE 2-2 Types and Timescales of CO_2 Sequestration Mechanisms

FIGURE 2-3 CO_2 EOR Surface Process Schematic

FIGURE 2-4 EHOF Structure Contour Map of Upper Pliocene Rocks Showing Faults and Location of Cross Section A-A'; Cross Section A-A' Showing Structure of EHOF Anticlines

FIGURE 2-5 EHOF Structure Contour Map of the Upper Miocene and Locations of Cross Sections A-B and C-D, Below

FIGURE 2-6 EHOF Cross Sections A-B and C-D; Location Shown in Fig. 2-5

FIGURE 2-7 EHOF Stratigraphy Based on 934 29R Well

FIGURE 2-8 EHOF Stratigraphic Column

FIGURE 2-9 Basic Process Flow Diagram of Planned CO_2 EOR Production Facilities

FIGURE 2-10 Project Overview and Key Plan for Appendix A

FIGURE 2-11 Basic Process Flow Diagram for the RCF and CRP Facilities

FIGURE 6-1 Seismic Events in Southern California from 1932 to 1996

1 Introduction and Project Overview

Occidental of Elk Hills, Inc. (OEHI) operates a large, mature oil production field in the Elk Hills Unit near Bakersfield, California. The boundaries of the Elk Hills Unit are depicted in Figure 1-1 OEHI is proposing to extend its existing Enhanced Oil Recovery (EOR) operations by utilizing carbon dioxide (CO_2) from the proposed Hydrogen Energy California (HECA) project to facilitate oil production from its Elk Hills operations (hereinafter referred to as the "OEHI CO_2 EOR Project"). The HECA Project, which will be located approximately 4 miles north of the Elk Hills Unit, will generate CO_2 from an Integrated Gasification Combined Cycle (IGCC) power plant.

This Project Description has been prepared based on information available to OEHI from a Class 3 Preliminary Front End Engineering Design (Pre-FEED) analysis. The Project Description will be updated as the HECA Project is further detailed and in accordance with results from a final FEED analysis.

In CO_2 EOR, the injected CO_2 moves through the reservoir, encountering residual droplets of crude oil, becoming miscible with the oil, and forming a concentrated more mobile oil bank that is swept toward the production wells. The U.S. Department of Energy (DOE) estimates that CO_2 EOR has the potential to increase total U.S. oil reserves by 45 to 85 billion barrels of oil (bbo), which are 2 to 4 times the current U.S. total proven reserves. A significant portion of these potential oil reserves are in California (5 to 6 bbo). (DOE-NETL, 2008)

The OEHI CO_2 EOR Project will have the capacity to utilize all of the CO_2 delivered by the HECA Project, both on an annual basis and over the expected life of the HECA Project. Based on extensive studies of the subsurface at Elk Hills, OEHI has determined that there is more than adequate capacity within the target geological formations to inject and trap the total volume of CO_2 delivered by the HECA Project. The capacity, operational injection volumes and pressures will be reviewed as a part of OEHI's permitting process with California Division of Oil, Gas and Geothermal Resources (DOGGR). DOGGR will be the agency responsible for issuing Class II Underground Injection Control (UIC) permits for the planned operations under provisions of the state Public Resources Code and the federal Safe Drinking Water Act of 1974.

As with oil and gas, CO_2 has been naturally trapped in geologic formations for millions of years. The injection of CO_2 into such formations has been safely practiced on an industrial scale for decades, mostly in conjunction with hydrocarbon production. Further, the U.S. Environmental Protection Agency (EPA) has recognized that oil and gas reservoirs will play a valuable role in the

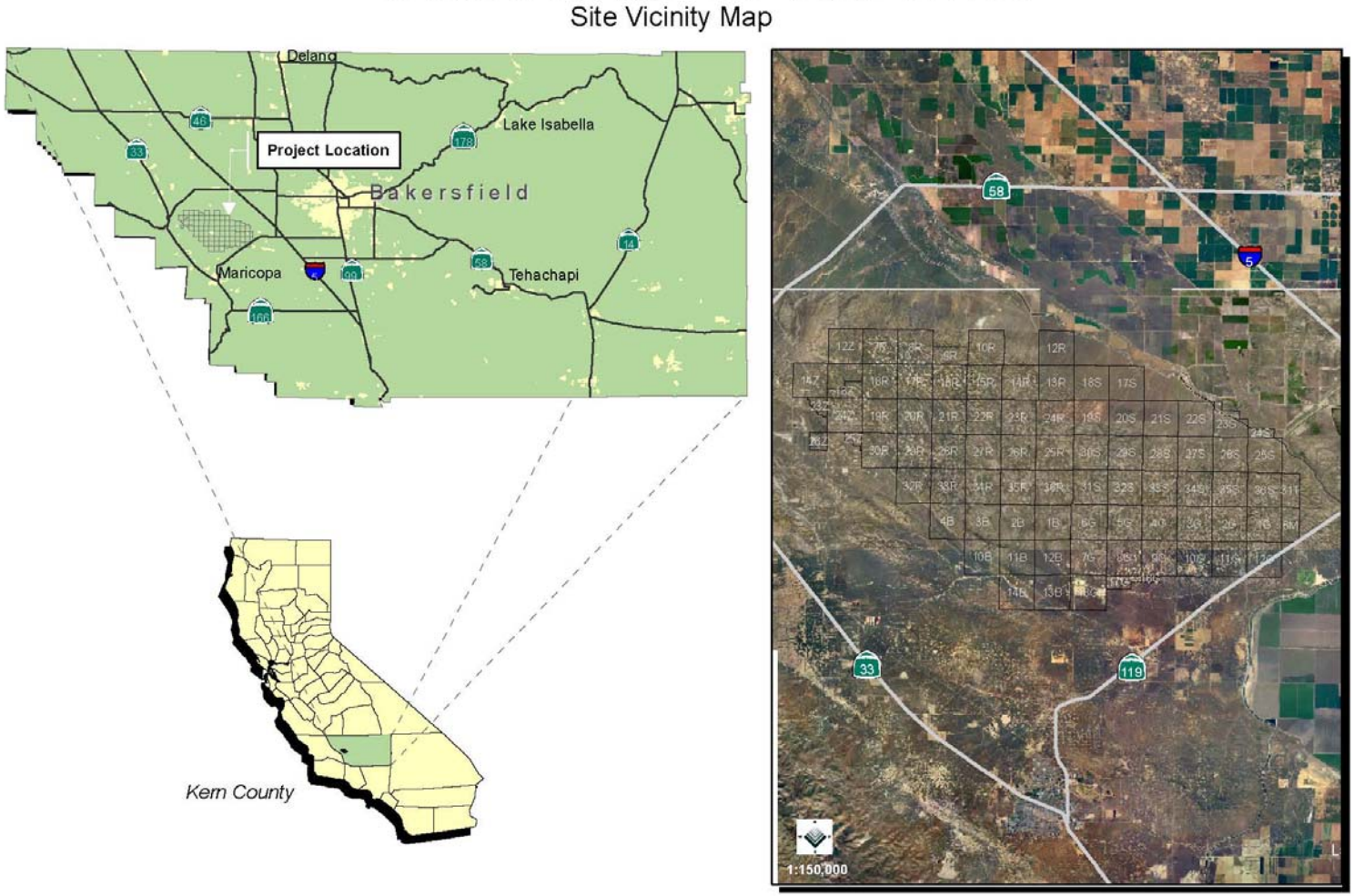

FIGURE 1-1 ELK HILLS OIL FIELD VICINITY MAP

geologic trapping of CO_2. Two of the reasons cited by EPA are: (1) oil and gas reservoirs are natural storage containers that have trapped fluids (both liquid and gaseous) for millions of years; and (2) oil and gas exploration and production activities have created a wealth of knowledge and geologic data that can support the site characterization process for geologic trapping. (See EPA's Proposed Rule: Federal Requirements under the Underground Injection Control (UIC) Program for Carbon Dioxide (CO_2) Geologic Sequestration (GS) Wells, 73 Fed. Reg. 43492 541, July 25, 2008). In addition, a DOE report (DOE-NETL, 2008) states that oil and gas reservoirs can be ideal candidates for trapping of CO_2 since oil and gas reservoirs have proven capable of storing fluids and gases for millions of years and replacing the extracted oil and hydrocarbon gas with CO_2 is an excellent use of such natural reservoirs. Importantly, not only does trapping of CO_2 occur during active EOR operations, but it continues after EOR operations cease.

The OEHI CO_2 EOR Project would become part of OEHI's Elk Hills operations. The general location and extent of the Elk Hills Unit is illustrated in Figure 1-1. The structure and stratigraphy of the Elk Hills oil field (EHOF) has been exhaustively studied and is ideally suited for the injection of CO_2. The Stevens Reservoirs, which are prominent and long-producing geological structures located approximately 1 mile below the surface, provide excellent EOR targets and ample capacity for long-term CO_2 geologic trapping. Between the surface and the Stevens Reservoirs, there exists naturally occurring dense and thick overlying shales that serve as excellent seals and have proven capable of containing fluids and gases for millions of years. While faults are present within the EHOF, these faults are non-transmissive as indicated by variable oil-water contacts, pressures and temperatures within individual Stevens Reservoirs. Consequently, there are no natural pathways from the subsurface injection zones to the surface. Therefore, CO_2 leakage to the surface and atmosphere is highly improbable.

The EOR process begins when CO_2 is injected into reservoirs at a pressure to dissolve into the oil reservoir, but below a pressure that would fracture the confining geologic zone. Under appropriate conditions, CO_2 and crude oil are miscible, meaning they are capable of mixing in any ratio and becoming a single homogeneous solution. Due to the induced pressure gradient caused from the injection of the CO_2, the CO_2 will flow away from the injection well (Figure 1-2) and become miscible with the reservoir oil. The resulting miscible fluid has the favorable properties of lower viscosity, enhanced mobility, and lower interfacial tension as compared to reservoir oil without dissolved CO_2. In effect, this process mobilizes and recovers oil that would otherwise be trapped within the rock. Water injection will be alternated with CO_2 injection to sweep the miscible CO_2-oil mixture to production wells and to control the movement of CO_2 through the oil.

As part of the continuous EOR process, the CO_2 is separated from the produced hydrocarbons at the surface and reinjected to the reservoir using a closed loop operating system to recover additional hydrocarbons. The surface facilities will be designed to prevent releases of CO_2 to the atmosphere. As CO_2 is a valuable commodity, all of OEHI's EOR surface facilities are designed to contain, recover and recycle CO_2 used in the EOR process. The injected CO_2 is monitored closely through each stage of the process. The closed-loop system consists of surface and subsurface facilities for injection, production, processing, separation, compression and reinjection of CO_2. With each pass of the CO_2 stream through the oil reservoir, a portion, typically 30 to 50 percent, of the injected CO_2 becomes trapped in the reservoir. The balance is recovered, recycled, and blended with additional CO_2 purchased from the HECA Project before being injected. Ultimately, all of the injected CO_2 becomes trapped in the formation and is sequestered. Thus, sequestration is an inevitable consequence of EOR, and, for the purposes of this document, the term "sequestration" will be used interchangeably with the term "trapping."

As it relates to the HECA Project, the CO_2 EOR process will be subject to monitoring, measurement, and verification (MMV) requirements. A site-specific MMV Plan will be developed with the objective of demonstrating trapping of HECA-provided CO_2. The MMV Plan will include consideration of the existing detailed subsurface, seismic, geochemical characterization and wellbore construction details that have been generated from the extensive data covering the EHOF. Selection of the appropriate suite of tools to satisfy the MMV objectives will be based on an assessment of the potential risks, taking into account the unique characteristics of the EHOF and the performance expectations at the site.

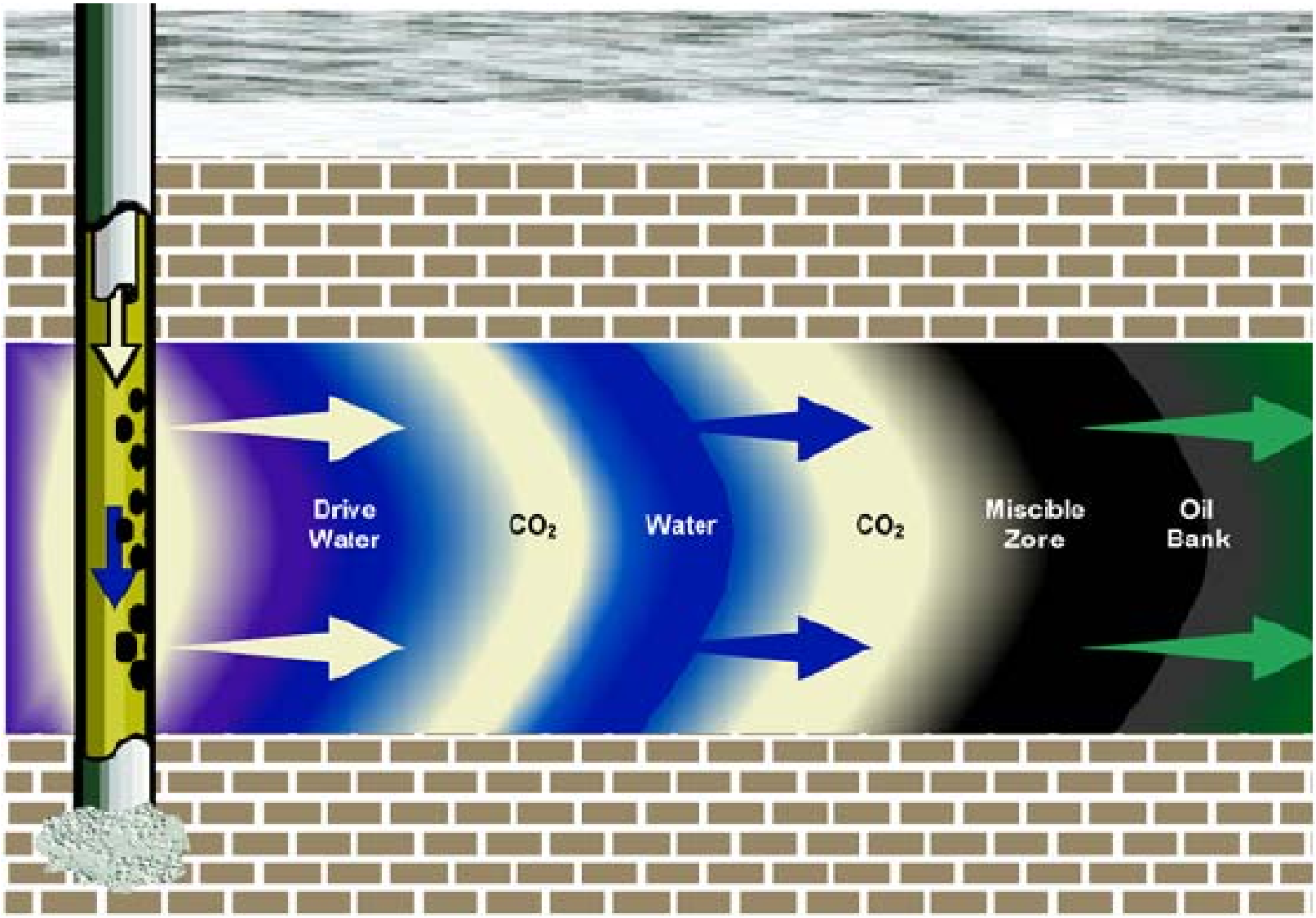

FIGURE 1-2 CO_2 EOR SCHEMATIC

1.1 Project Benefits

The OEHI CO_2 EOR Project will provide a variety of benefits at the local, state, regional, national and global levels. Among these benefits are the following:

- Extension and Enhancement of Production from Elk Hills Unit. Occidental's experience with EOR at Elk Hills and its world-leading expertise in CO_2 EOR will allow the OEHI CO_2 EOR Project to extend production at Elk Hills Unit.

- Reduction in Dependence on Foreign Oil. CO_2 EOR at Elk Hills Unit will extend production from a valuable domestic oil field for many years, partially alleviating the dependence of California and the United States on foreign oil supplies.

- Reduction in CO_2 Emissions. As a user of CO_2 from the nearby HECA Project, the OEHI CO_2 EOR Project will, as a co-benefit to the enhancement of oil recovery, act as a mitigation measure for the HECA Project by allowing for the sequestration of CO_2 emissions from the HECA operations and promote the siting of a valuable power generation resource in California.

- Minimizing Sensitive Habitat Disturbance. The OEHI CO_2 EOR Project will use much of the existing infrastructure such as roads, pipelines pathways and storage and processing facilities to extend recovery of oil and gas while minimizing impacts on the environment. In addition, the OEHI CO_2 EOR Project provides significant net environmental and economic benefits in habitat conservation and the efficient use of existing infrastructure.

- Economic Benefit. The OEHI CO_2 EOR Project will boost the local and California economy with jobs associated with construction and operations, as well as extend the life of the Elk Hills Unit where 345 employees and 2,650 contractors currently work.

1.2 Project Objectives

Project objectives are summarized as follows:

- Extend and enhance the useful and productive life of the Elk Hills Unit.

- Increase California and domestic energy supplies and enhance energy security by maximizing production of petroleum reserves.

- Economically maximize oil recovery within the Elk Hills Unit and safely sequester CO_2 in accordance with all county, state, and federal safety and environmental rules and regulations.

- Provide a mechanism to mitigate CO_2 emission impacts from the nearby HECA Project.

- Minimize environmental impacts associated with the construction and operation of the OEHI CO_2 EOR Project through choice of technology, project design and implementation of feasible and appropriate mitigation measures.

- Ensure the economic viability of the OEHI CO_2 EOR Project by minimizing costs while achieving other Project objectives.

1.3 Project Ownership

OEHI is the majority owner (78 percent) of the Elk Hills Unit and Chevron owns the remaining 22 percent. OEHI operates the Elk Hills Unit on behalf of Occidental and Chevron.

1.4 Proposed Project Schedule

Permitting activities	Ongoing
Start of construction	Spring 2012
Completion of construction	End of year 2014
Commissioning and initial startup	Spring 2015
Commercial operation of the Project	Summer 2015

1.5 Location

The Elk Hills Unit is located 26 miles (42 kilometers [km]) southwest of Bakersfield in western Kern County, California. The entire Elk Hills Unit (approximately 48,000 acres) includes land distributed across all or part of 81 sections within the following townships: T.30S, R.22E; T.30S, R23E; T.30S, R.24E; T.30S, R.25E; T.31S, R.25E; and T.31S, R.24E, Mount Diablo Baseline and Meridian (MDB&M).

The Elk Hills oil field was originally developed as part of the federal Naval Petroleum Reserves, and was designated as “NPR-1.” The U.S. Navy, the original operator of the field, did not use the customary cadastral survey conventions to refer to the location of a particular section. Instead, it employed a “short cut” method in which each distinct Township/Range was identified by a letter designation. Under the cadastral survey method, each township is comprised of 36 one-mile square sections, numbered

1 through 36; each section is referred to by section, township and range designations. Under the Navy's shortcut method, however, each section at the Elk Hills oil field was identified simply by its section number and the township/range letters. Thus, what would normally be described as "Section 7 of Township 30 South, Range 23 East" was described by the Navy simply as "Section 7R." The Navy's convention has persisted and, therefore, all sections within and adjacent to the Elk Hills oil field are still commonly referred to by this shortcut method, which is used in this document (Figure 1-3).

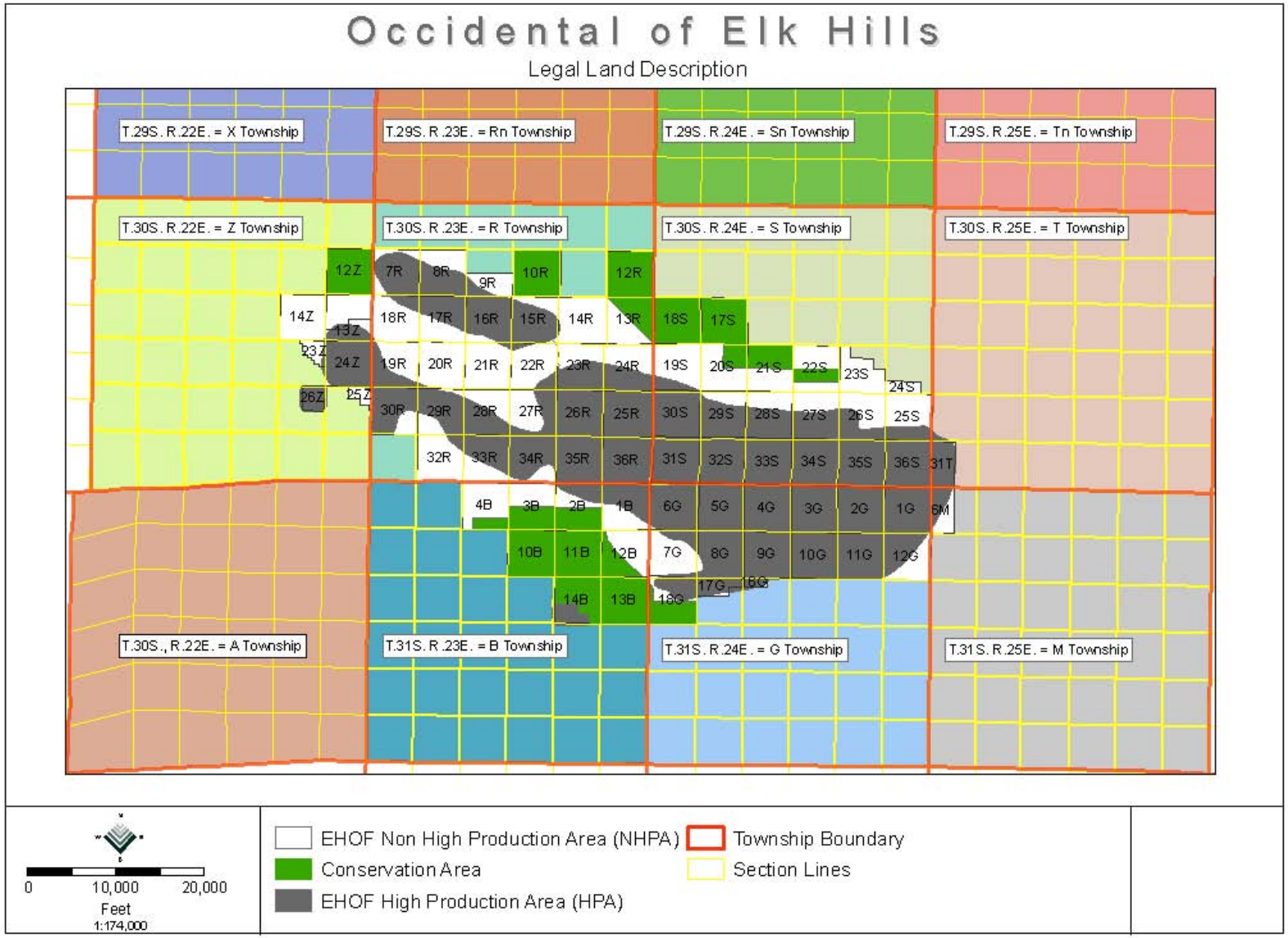

FIGURE 1-3 ELK HILLS OIL FIELD TOWNSHIP/RANGE NAMING CONVENTIONS SCHEMATIC

The Elk Hills Unit is located along the southwest edge of the San Joaquin Valley. This area is situated immediately south of, and contiguous with, the Lokern Area of Critical Environmental Concern (ACEC),[1] a part of which (3,110 acres) is controlled by the Bureau of Land Management (BLM). Portions of this surrounding area (2,050 acres) are managed by the Center for Natural Lands Management (CNLM) and OEHI (formerly Plains Exploration and Production Company and Nuevo Energy Company) Habitat Management Lands (200 acres) as conservation areas. The remainder is owned by Chevron Corporation and others. The City of Buttonwillow is located directly to the north.

McKittrick Valley and portions of Buena Vista Valley with Highway 33 running NW-SE are to the west. The cities of McKittrick and Derby Acres are located along Highway 33. Approximately 10 miles to the west and across the Temblor Range is the Carrizo Plain National Monument (also an ACEC; 199,030 acres).

To the south of the Elk Hills Unit is the Buena Vista Valley, the majority of which is within another oil field, NPR-2, which was recently transferred from the DOE ownership to the BLM. The City of Taft is located approximately 7 miles to the south. Mostly undeveloped areas are located along Highway 119 to the southeast of Elk Hills Unit.

Lands to the immediate east include Coles Levee Ecological Preserve (CLEP; 6,059 acres), Kern Water Bank Authority (19,900 acres), Tule Elk Reserve State Park and the Kern River. The California Aqueduct and the West Side Canal converge and flow along the north and eastern boundary of Elk Hills Unit, as does the Kern River. The Buena Vista Lake Bed is located immediately southeast of Highway 119. Bakersfield is approximately 26 miles to the northeast. The Elk Hills Unit is circumscribed by Highway 5 to the north and east, Highways 119 and 33 to the south, Highway 33 to the west and Highway 58 to the north. Elk Hills Road runs north and south and bisects the project area. Figure 1-4 provides an overview of the Elk Hills Unit with a regional context.

[1] This ACEC designation is authorized by Section 202(c) (3) of the Federal Land Policy and Land Management Act of 1976 (FLPMA, P.L. 94-579). ACEC include public lands where special management attention and direction is needed to protect and prevent irreparable damage to important historic, cultural and scenic values, fish, or wildlife resources or other natural systems or processes or to protect human life and safety from natural hazards. ACEC designation indicates BLM recognizes the significant values of the area and intends to implement management to protect and enhance the resource values.

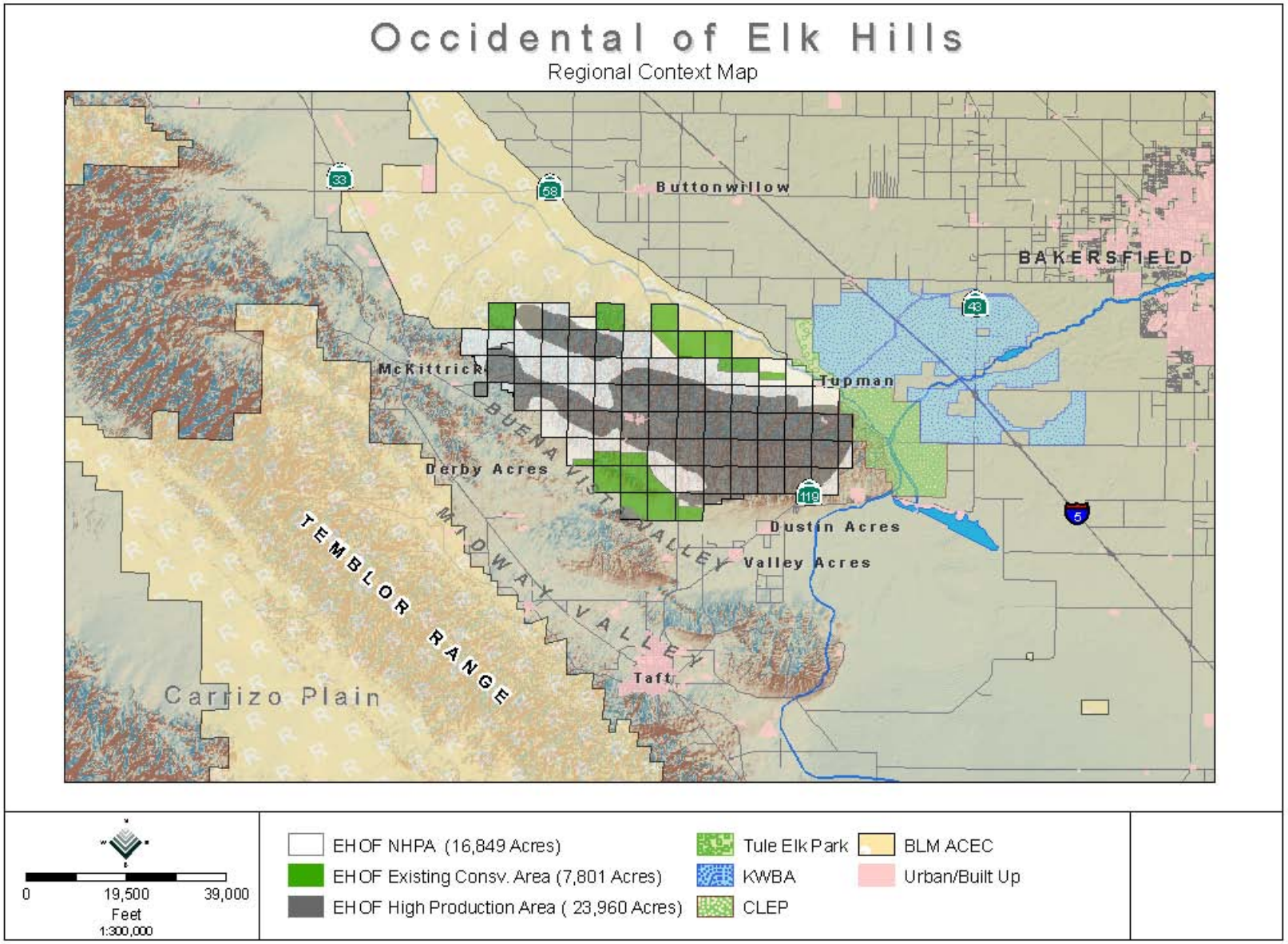

FIGURE 1-4 ELK HILLS OIL FIELD IN THE REGIONAL CONTEXT

1.6 Project Components

The OEHI CO_2 EOR Project components are listed below and described further in Sections 2 and 3.

- CO_2 Injection and Recovery Equipment
  - CO_2 Supply System
  - Satellite Gathering Stations
  - Infield Gathering and Injection Distribution Pipelines
- Recovered CO_2 Purification and Compression
  - Central Tank Battery (CTB)
  - Reinjection Compression Facility (RCF)
  - CO_2 Recovery Plant (CRP)
  - Water Treating and Injection Plant
- Backup CO_2 Injection Facility
- CO_2 Sequestration Monitoring and Verification
- Supporting Process Systems
  - Hazardous Material Management
  - Hazardous Waste Management
  - Stormwater Management
  - Fire Protection
  - Control Systems
  - Utilities
  - Project Buildings/Facilities
  - Security Systems
  - CO_2, Monitoring, Measurement, Verification and Closure

All temporary construction areas, including construction parking, offices, and construction laydown areas, will be located within the OEHI's existing operations.

The disturbed acreage associated with the OEHI CO_2 EOR Project will be estimated in more detail when the project moves to the FEED stage. The following general information regarding disturbed acreage is available:

- A significant portion of the development will occur in areas where disturbance has already occurred. OEHI will design project components to utilize existing disturbed acreage to the extent feasible.

- The CO_2 Facility and the 13 satellites are expected to occupy approximately 100 acres; however, until the FEED is completed, it is not possible to determine the extent of newly disturbed acreage. Newly disturbed acreage will be minimized to the extent feasible.
- The estimated total length of all new pipelines is 550 miles, much of which will be located in existing pipeline corridors that are already sited on disturbed acreage. Total disturbed acreage for the new pipelines and drilling pads will not be available until completion of the FEED. OEHI will utilize existing pipeline corridors, Rights of Way (ROWs) and disturbed acreage to the extent feasible.
- OEHI will design project components to minimize disturbed footprint during construction, as appropriate. Additionally, OEHI will restore temporarily disturbed acreage.
- The current estimated number of producing and injection wells is approximately 550. OEHI will attempt to use as many existing wells and drilling pads and locate new drilling pads in disturbed acreage as much as possible.

Table 1-1 summarizes site meteorology and other characteristics upon which the design will be based.

TABLE 1-1 SITE CHARACTERISTICS

Elevation	General site elevation varies from 250 – 1,325 feet above msl	
Design Ambient Temperature and Humidity	Dry Bulb °F	Relative Humidity (%)
Average Ambient	65°	55
Summer Design	97°	20
Winter	39°	82
Extreme Minimum Ambient	20°	85
Extreme Maximum Ambient	115°	15
Design Ambient Barometric Pressure		14.54 psia
Average Precipitation per year		5.7 inches (average. 2000 – 2006)
24-hour Max Precipitation (50-year storm)		1.8 inches

Source: Computed from Annual and Monthly Summaries (year span) of Bakersfield, California Meteorological Data, NOAA, National Climate Data Center, Asheville, North Carolina.

Notes:

ºF = degrees Fahrenheit
% = percent
msl = mean sea level
psia = pounds per square inch absolute

1.7 Site Plan

Figure 1-5 presents an overall site plan for the OEHI CO_2 EOR Project, including:

- Planned pipeline alignment from the HECA Project to OEHI operations
- Approximate location of injection wells, associated equipment and piping over the project life
- Location of the CO_2 Facility including Recovery Plant & Reinjection Compression Facility
- Alignment of piping to Backup CO_2 Injection Facility
- Location of Backup CO_2 Injection Facility

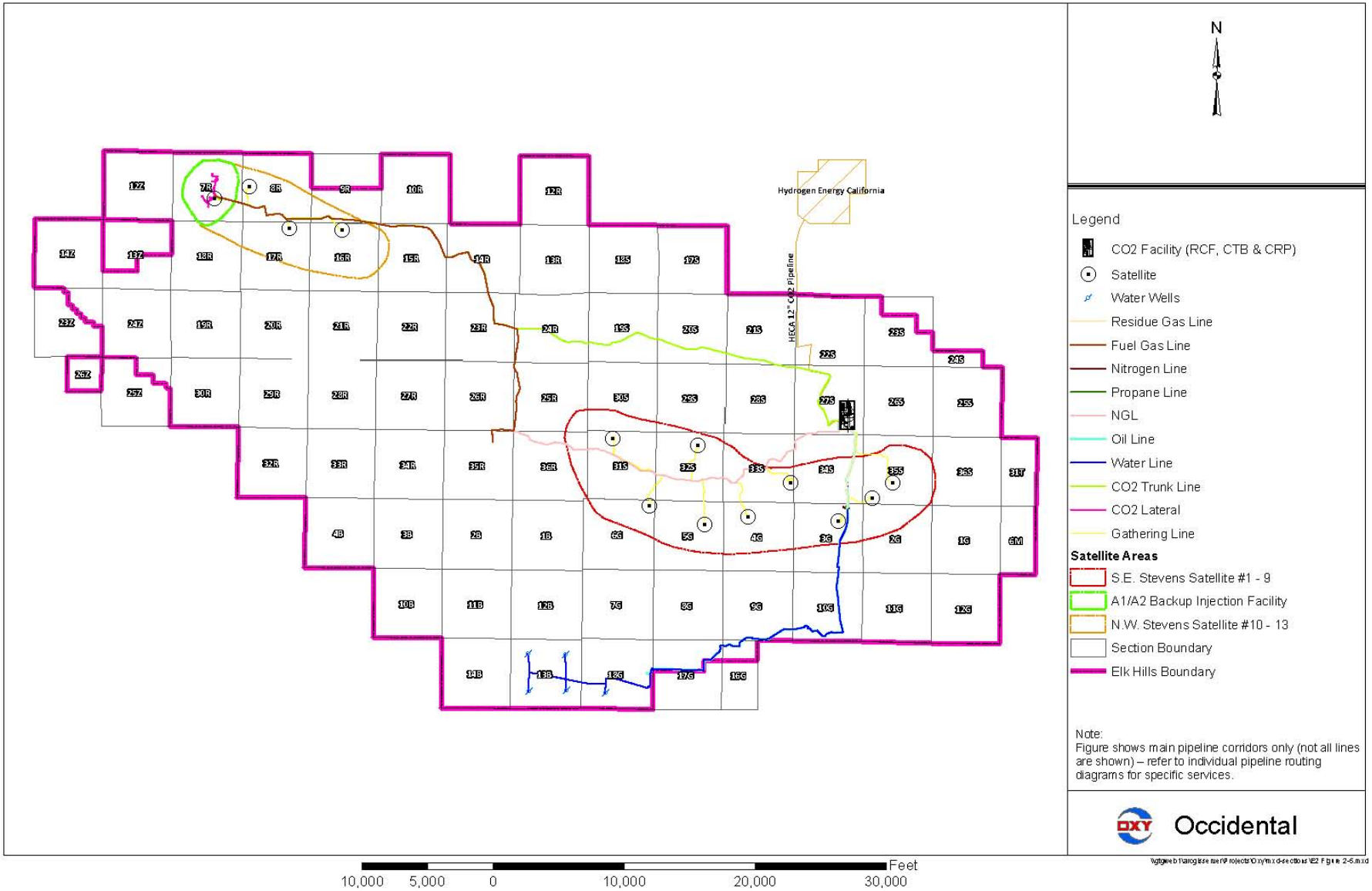

FIGURE 1-5 CONCEPTUAL PLOT PLAN

2 CO_2 Enhanced Oil Recovery

High volume CO_2 injection for EOR, similar to the volumes anticipated for the OEHI CO_2 EOR Project, began in West Texas in the early 1970s. CO_2 EOR has proven capable of increasing oil production and extending the life of mature oil fields. CO_2 injection in the targeted zones of the Stevens Reservoirs has the potential to significantly increase recoverable oil reserves and extend the productive life of the Elk Hills Unit. The CO_2 EOR process involves the injection, recovery, processing and reinjection of CO_2 to allow trapped oil to flow more readily through the reservoir, thereby improving recovery. During the process, injected CO_2 becomes trapped in the reservoir.

The OEHI CO_2 EOR Project will utilize CO_2 generated by the proposed HECA Project. According to the HECA Project siting application, the HECA Project intends to utilize technology capable of capturing over 90 percent of the CO_2 produced during HECA facility operations. The OEHI CO_2 EOR Project is expected to receive an annual average rate of 107 million standard cubic feet per day (mmscfd) of CO_2 (approximately 2 million tonnes per year). This CO_2 will be compressed and delivered via pipeline to OEHI's CO2 Facility. The planned injection volumes and pressures will be reviewed as a part of the OEHI permitting process with DOGGR. During all phases of this project, OEHI will comply with UIC Class II regulations enforced by DOGGR.

As with oil and gas, CO_2 has been naturally trapped in geologic formations for millions of years. The injection of CO_2 into such formations has been safely practiced on an industrial scale for decades, mostly in conjunction with hydrocarbon production. Further, the EPA has recognized that oil and gas reservoirs will play a valuable role in the geologic trapping of CO_2. Two of the reasons cited by EPA are: (1) oil and gas reservoirs are natural storage containers that have trapped fluid (both liquid and gaseous) for millions of years; and (2) oil and gas exploration and production activities have created a wealth of knowledge and geologic data that can support the site characterization process for geologic trapping. (See EPA's Proposed Rule: Federal Requirements under the Underground Injection Control (UIC) Program for Carbon Dioxide (CO_2) Geologic Sequestration (GS) Wells, 73 Fed. Reg. 43492 541, July 25, 2008). In addition, a DOE report (DOE-NETL, 2008) states that oil and gas reservoirs can be ideal candidates for trapping of CO_2 since oil and gas reservoirs have proven capable of storing fluids and gases for millions of years; and replacing the extracted oil and hydrocarbon gas with CO_2 is an excellent use of such natural reservoirs. Importantly, not only does trapping of CO_2 occur during active EOR operations, but it continues after EOR operations cease.

In 2005, the Intergovernmental Panel on Climate Change (IPCC), established by the World Meteorological Organization (WMO) and the United Nations Environment Programme (UNEP) in 1988, released a report entitled "Carbon Dioxide Capture and

Sequestration" (the "IPCC Report"). The IPCC is charged with providing relevant advice to policymakers on all aspects of climate change. The IPCC Report was written by 125 contributing authors, and was extensively reviewed by over 200 others, including technical experts and government representatives from around the world. The IPCC Report carefully weighs the technologies and the potential risk of CCS and concludes that, with appropriately selected and managed sites, CO_2 may be sequestered by injection into suitable geologic formations including oil and gas reservoirs. The IPCC Report notes that the early commercial scale CCS projects will probably employ CO_2 sequestration with EOR as their basis of design, which will extensively inform the technical development and safe deployment of CCS projects in other types of geologic formations.[2]

The EHOF reservoirs have the advantage of being well studied and provide a uniquely suited setting for large-scale geologic sequestration of CO_2, building on 100 years of oil and gas field operating experience in the EHOF and the oil industry's more than 35 years of CO_2 EOR operations. The appropriateness of using CO_2 EOR in any given oil field or reservoir cannot be determined until the geologic setting is evaluated to enable informed decisions in terms of reservoir management, safety, and carbon sequestration potential. As a result of thousands of wells being installed over the operational history of the EHOF, a significant database has been developed and utilized to model the proposed OEHI CO_2 EOR Project. This extensive database was transferred to OEHI when Elk Hills was acquired from the federal government in 1998. As a result, OEHI is in the unique position of possessing all of the subsurface information that has been accumulated over the nearly 100-year life of the field. As described in Section 2.1.1 and 2.2.2, the EHOF has been found to be an ideal candidate for CO_2 EOR.

2.1 CO_2 EOR Process Overview

The CO_2 EOR process can be described in two parts: subsurface process and aboveground CO_2 handling process.

2.1.1 Subsurface Process Overview

In CO_2 EOR operations, highly compressed CO_2 (which has the characteristics of a liquid) is injected into an oil reservoir through injection wells designed for CO_2 injection. Injection occurs at high pressure to maintain liquid-like state, facilitate transfer of the desired volume of CO_2 into the reservoir, and promote miscibility. Injection occurs at pressures below levels that could fracture the confining geologic

[2] Notably, it is estimated that site characterization of saline reservoirs will likely cost tens of millions of dollars and it would take a decade or more to develop one large-scale commercial saline storage reservoir project exceeding 2 million tons/year of CO2.

zones or compromise the integrity of the reservoir. As a result of the pressure difference between the injection well and the reservoir, the CO_2 flows from the injection well (see Figure 2-1) and dissolves in the oil (CO_2 and oil are miscible under these reservoir conditions and form a single-phase solution). The miscibility of the CO_2 and the oil is dependent on the characteristics of both the oil reservoir, including pressure and temperature, and the chemical composition of the reservoir fluids. CO_2 EOR alters the oil properties, resulting in lower viscosity, enhanced mobility and lower interfacial tension when compared to oil extraction without CO_2 EOR. CO_2 EOR helps to mobilize oil naturally trapped in the rock, facilitating oil production. In order to enhance EOR performance, a technique of alternating cycles of water injection with cycles of CO_2 injection may be used (referred to as "Water Alternating Gas" or "WAG"). The introduction of water periodically behind the CO_2-oil miscible solution facilitates the "sweeping" of the CO_2-oil solution to production wells and further enhances oil recovery.

The current development of the Elk Hills Unit uses a mature pattern of water flood with over 200 water injection wells and an average injection rate for each well of nearly 900 barrels of water per day (bwpd) of water produced from the Elk Hills Unit. OEHI proposes to convert the reservoirs from the current application of water flood to a miscible-CO_2 EOR flood. During this process, many of the water injectors will be converted to CO_2 injectors, with estimated average injection rates between 2 and 20 mmscfd per injection well.

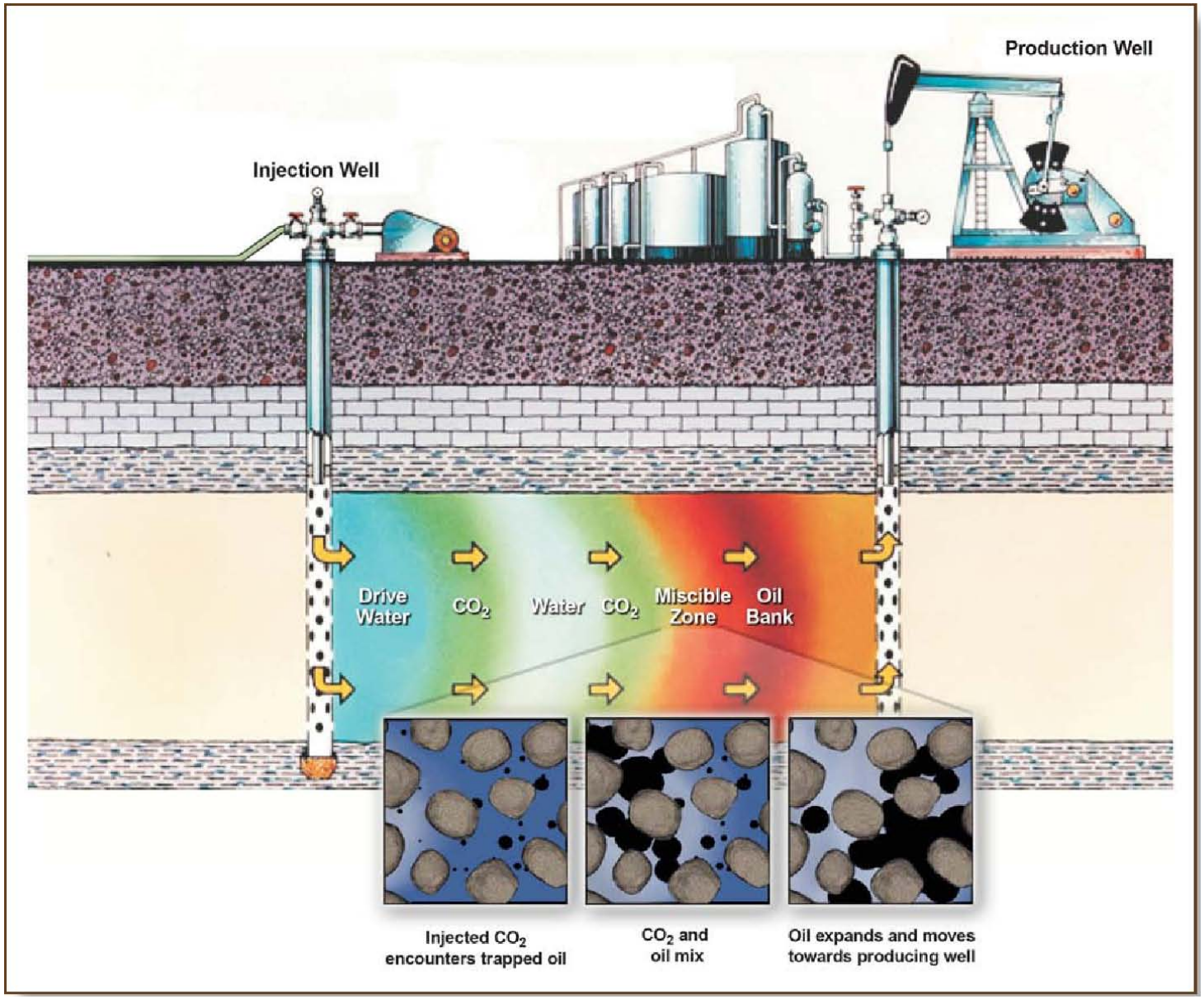

FIGURE 2-1 SCHEMATIC OF MISCIBLE-CO_2 FLOOD (DOE-NETL, 2008)

Production operations are designed to make the most efficient use of CO_2 from the HECA Project to maximize oil recovery and production. This is done by separating the CO_2 from the recovered hydrocarbons at the surface and recycling the CO_2 within a closed system for reinjection into the reservoir as part of the continuous EOR process. Injected and recycled quantities of CO_2 are monitored closely, as CO_2 is a valuable commodity that is purchased by OEHI from the HECA Project. However, trapping of CO_2 within the formation is inevitable with each injection cycle, necessitating the introduction of additional amounts of purchased CO_2 to continue the EOR operation.

The reservoir geological environment will determine the extent to which CO_2 will be immobilized, trapped and retained in the reservoir, making it difficult to predict the recovery (and trapped) fractions for each pass of CO_2 through the reservoir. Occidental's extensive experience as a world-wide leader in operating CO_2 EOR indicates that approximately 30 to 50 percent of the injected CO_2 mass remains trapped in the reservoir and is unrecoverable. Regardless of the fraction of CO_2 trapped during a cycle, all CO_2 injected eventually becomes trapped in the reservoir.

The key CO_2 trapping mechanisms that occur in the subsurface include physical trapping, residual gas trapping and geochemical trapping.

- Physical trapping (and trap filling) retains the CO_2 in the formation using structural and stratigraphic traps with low-permeability formations and faults. Physical trapping of the buoyant CO_2 is provided by the same impermeable "caprock" seal that traps the oil and hydrocarbon gases.
- Residual trapping and dissolution of the liquid or gaseous CO_2 occurs as a result of capillary forces retaining some of the CO_2 as disconnected droplets. Residual trapping is analogous to residual oil saturation (i.e., "trapped" oil) that remains after an oil reservoir is swept with injected water.
- Geochemical trapping describes a series of reactions of CO_2 with natural fluids and minerals in the target formation, principally consisting of CO_2 dissolution in brine (i.e., solubility trapping), CO_2 precipitation as mineral phases (i.e., mineral trapping) and CO_2 sorption onto mineral surfaces. Scientific research is continuing to increase the understanding of the chemical processes involved in geochemical trapping.

These trapping mechanisms operate on different time scales, beginning with initial injection of CO_2 and have different capacities to trap CO_2. The following schematic (Figure 2-2) depicts that over time, the process of physical and residual CO_2 trapping is enhanced by the increasing geochemical processes of solubility trapping and mineral trapping.

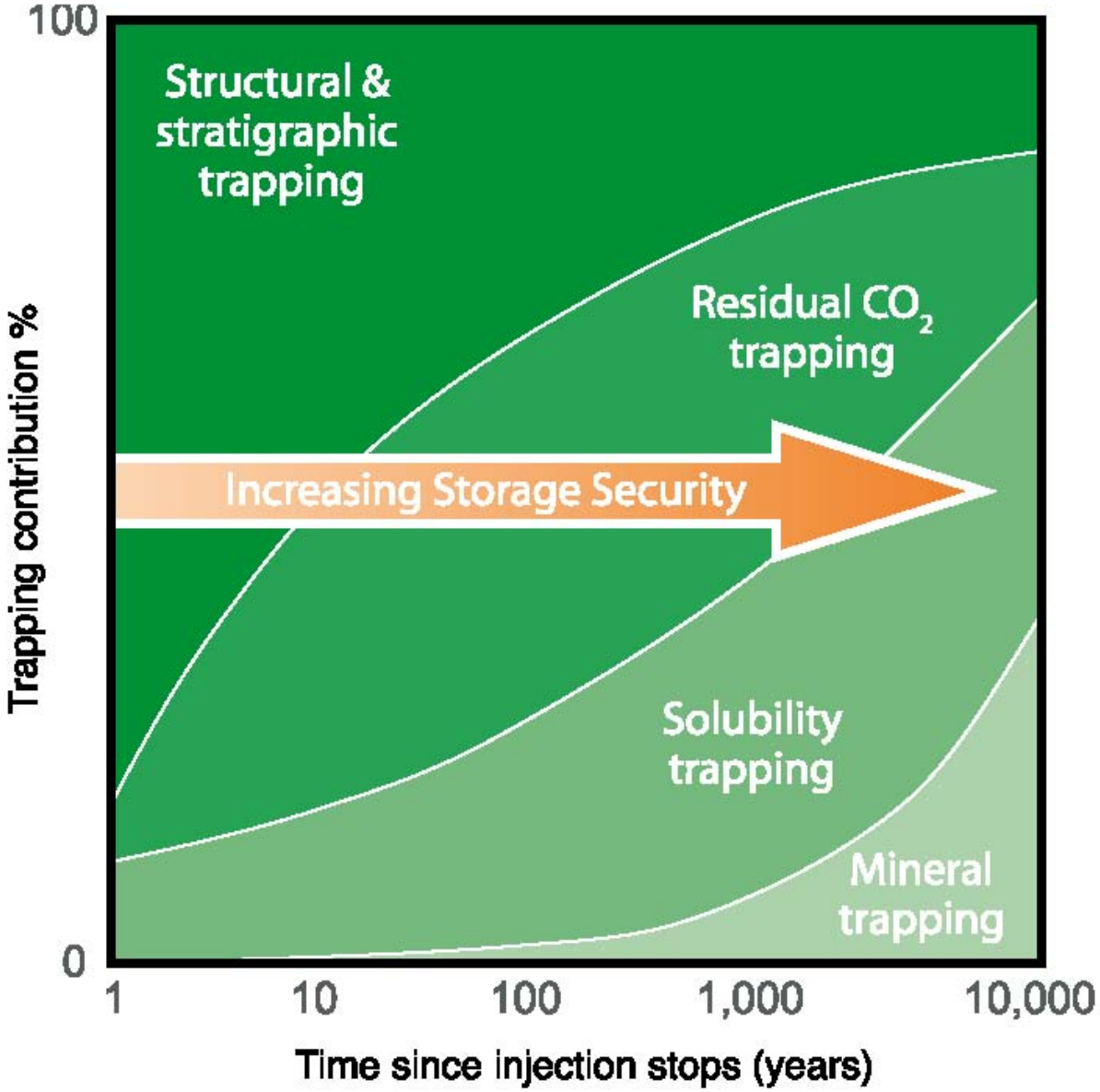

FIGURE 2-2 TYPES AND TIMESCALES OF CO_2 SEQUESTRATION MECHANISMS (IPCC, 2005)

2.1.2 Aboveground CO_2 Handling Process Overview

CO_2 from the HECA Project will be transported via a pipeline to the CO_2 Facility, at which point the CO_2 is distributed to CO_2 injection wells placed in a well pattern designed to optimize the recovery of oil from the reservoir.

There may be three, four or more production wells per injection well where oil and water is pumped to the surface to a centralized collection facility. Typically, these wells are arranged in a consistent geometrical pattern with an injection well in the center and production wells on the perimeter. For example, in a four-spot pattern, there would be four production wells on the four corners of a square geometric pattern, with a single injection well in the center of the pattern. The pattern of injection and production wells will vary with time, and is typically based on predictive computer simulations that model reservoir performance based on reservoir characterization and historical operations. Operational data will be obtained at well manifolds where an individual well's oil, gas and water fractions will be measured, which further helps assess the effectiveness of the CO_2 EOR process.

At the surface, the recovered fluids are transferred to a separator at the CO_2 Facility where the oil and natural gas are separated. The natural gas may include CO_2 as the injected gas begins to break through at the production wells. Separated natural gas enters a pipeline for transport to the existing gas processing facility in Section 35R of the Elk Hills Unit where it is combined with other produced gas from the field for sale to customers. The CO_2 is separated from the produced natural gas to meet sales specifications and the separated CO_2 is recompressed for reinjection along with additional purchased CO_2 from the HECA Project to further optimize the CO_2 EOR process.

A schematic of a typical miscible-CO_2 EOR operation is shown in Figure 2-3 below. The planned OEHI process is described in more detail in Section 2.3.

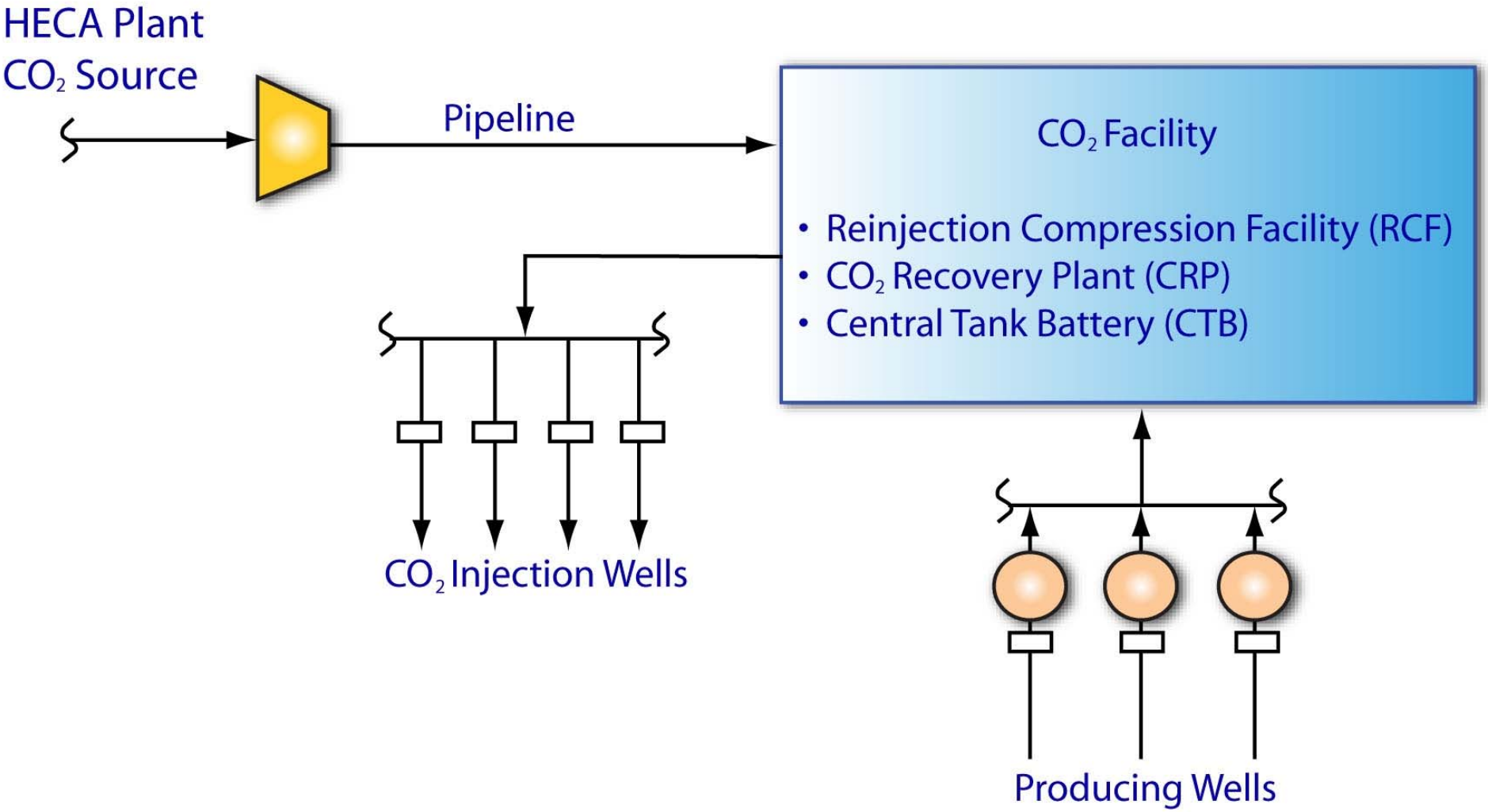

FIGURE 2-3 CO_2 EOR SURFACE PROCESS SCHEMATIC

2.2 Site Selection and Geological Setting

2.2.1 General Elk Hills Structure and Geology

The EHOF produces hydrocarbons (oil and gas) from several vertically-stacked Tertiary-aged (65 to 2 million years ago) coarse-grained clastic reservoirs interlayered with multiple layers of saling fine-grained shale. These layers have been folded and faulted, resulting in anticlinal structures containing hydrocarbons of probable Oligocene and Miocene (approximately 33 to 5 million years ago) source. The hydrocarbons were generated in the deep flanks of the Elk Hills structure and/or migrated into the structure from surrounding subbasins, beginning in the Pliocene, approximately 5 to 2.5 million years ago (Zumberge et al, 2005). The combination of multiple porous and permeable sandstone reservoirs interlayered with multiple impermeable shale seals and large anticlinal structure make the EHOF one of the most suitable locations for the extraction of hydrocarbons and the trapping of CO_2 in North America. The individual structures and geologic horizons within the EHOF are detailed in the following paragraphs.

At the surface, the EHOF presents as a large WNW-ESE trending anticlinal structure, approximately 17 miles long and over 7 miles wide. With increasing depth, the structure sub-divides into three distinct anticlines, separated at depth by high angle reverse faults (Figure 2-4). The anticlines are believed to have formed in a transpressional regime associated with formation of the San Andreas Fault, beginning in the Middle Miocene, which began approximately 16 million years ago (Callaway and Rennie Jr., 1991). The anticlines, labeled 29R, 31S and Northwest Stevens (Figure 2-5), formed bathymetric highpoints on the deep inland marine surface (seafloor), affecting geometry and lithology of the contemporaneously deposited turbidite sands and muds generated as subaqueous debris flows (Figures 2-5 and 2-6).

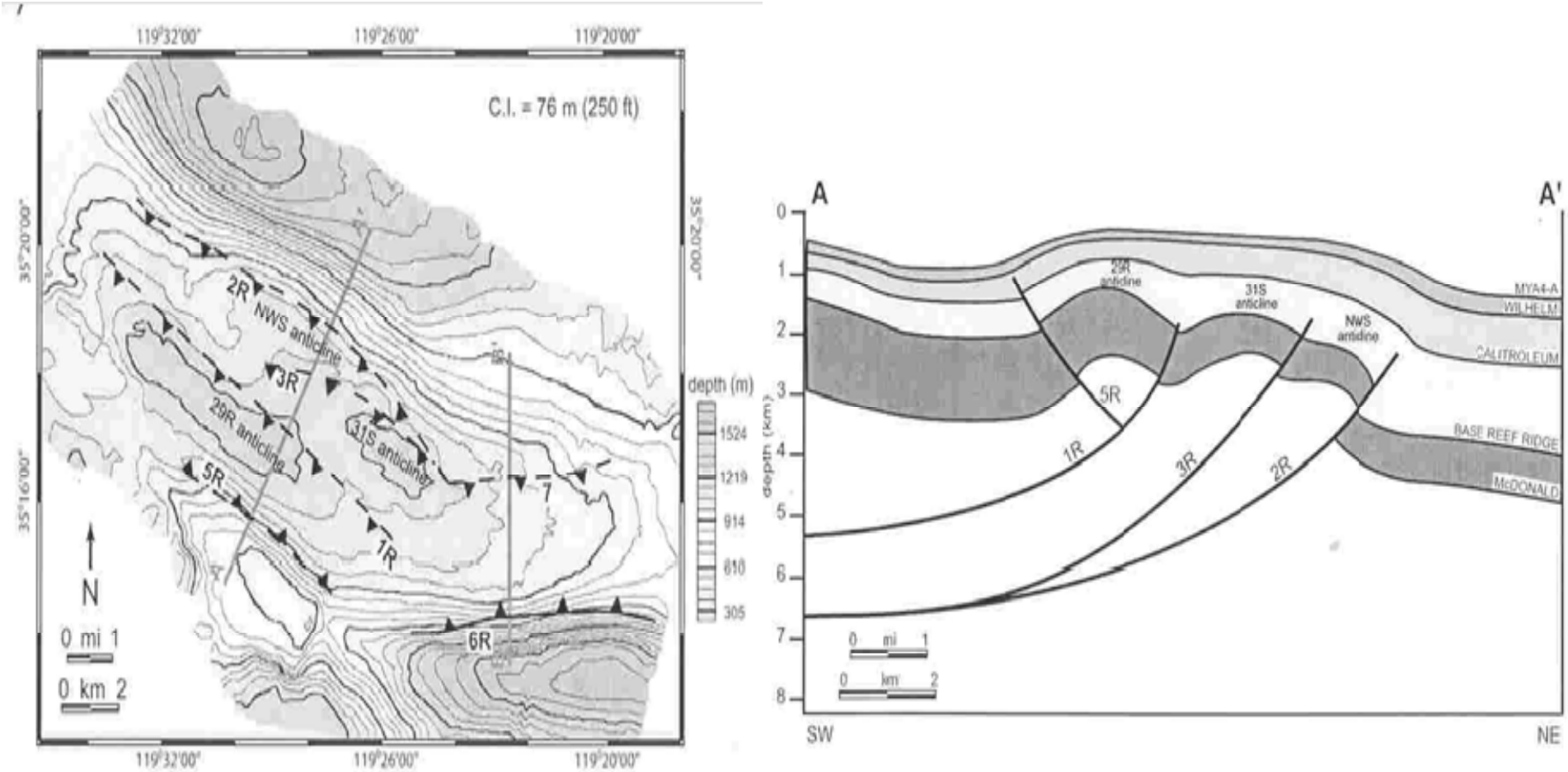

FIGURE 2-4 EHOF STRUCTURE CONTOUR MAP OF UPPER PLIOCENE ROCKS SHOWING FAULTS AND LOCATION OF CROSS SECTION A-A'; CROSS SECTION A-A' SHOWING STRUCTURE OF EHOF ANTICLINES. (FIORE, ET AL. 2007)

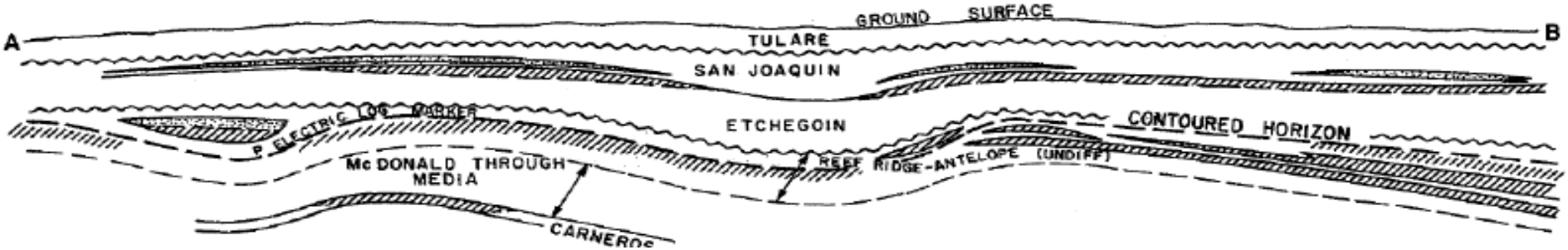

FIGURE 2-5 EHOF STRUCTURE CONTOUR MAP OF THE UPPER MIOCENE AND LOCATIONS OF CROSS SECTIONS A-B AND C-D, BELOW (DOGGR 1998)

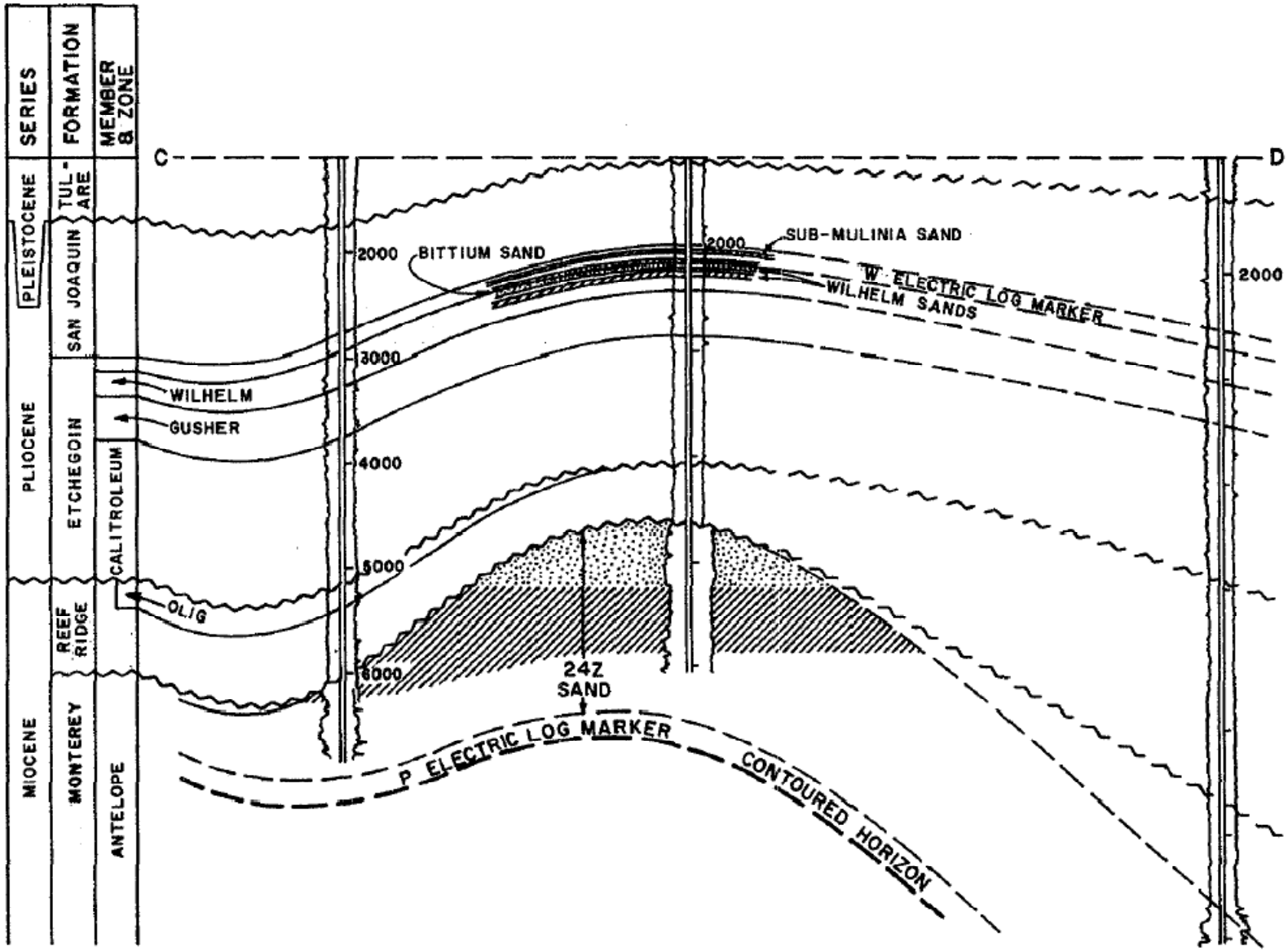

FIGURE 2-6 EHOF CROSS SECTIONS A-B AND C-D; LOCATION SHOWN IN FIGURE 2-5 (DOGGR 1998)

To date, there have been more than 6,000 wells drilled to various depths within the EHOF, creating an extensive library of information compiled within a comprehensive database. The deepest well in the field is the 934 29R, drilled to a total depth of 24,426 feet, bottoming in Mesozoic, Upper Cretaceous age (93 to 65 million years ago) sediments. A schematic diagram of the EHOF area stratigraphy based on well 934-29R is presented (Figure 2-7), as well as the electric log (Figure 2-8). The oldest rocks observed in the field are Upper Cretaceous in age but they are not productive. The Miocene-aged Carneros sandstone member of the Temblor Formation is the lowermost hydrocarbon producing interval in the field, although oil and gas shows have been recorded in deeper Oligocene- and Eocene-aged (55 to 23 million years ago) sediments. Above the Temblor is the Miocene aged Monterey Formation.

The Monterey (approximately 4,500 to 10,000 feet deep) is known locally as the EHOF member and this formation includes the EOR targeted Stevens oil sands that produce from stratigraphic-structural traps on three deep anticlines. Major Stevens Reservoirs include Main Body B ("MBB"), 26R, W31S, 24Z, 2B, A1A6 and T&N pools. The Stevens sands are composed of stacked fining upward turbidite deposits composed of lenticular sheet sands, channels and levee deposits within a submarine fan complex (Reid, 1990). Reservoir properties of the Stevens sands are excellent and have led to decades of hydrocarbon production, with porosities averaging between 20 and 25 percent, permeabilities averaging 150 millidarcy (mD) and net reservoir thicknesses that can exceed 1,000 feet. The uppermost Miocene formation is the Reef Ridge Shale, which is hard and siliceous (Nicholson, 1990) and acts as a stratigraphic trap keeping hydrocarbons below. A number of deep thrust and wrench faults, as well as a series of curvilinear normal faults, intersect the Stevens Reservoirs within the EHOF. These faults are believed to have influenced hydrocarbon migration from deeper source rocks (McJannet, 1996), but faults within the lower productive limits on the anticlinal structures die-out above in the overlying Reef Ridge Shale and Etchegoin Shale. These faults may provide some limited communication between some of the productive sands, though most units are not in communication with one another, having different oil-water contacts. Further, individual anticline sands are compartmentalized, as exhibited by different pressures and temperatures (C&C Resources, 2000).

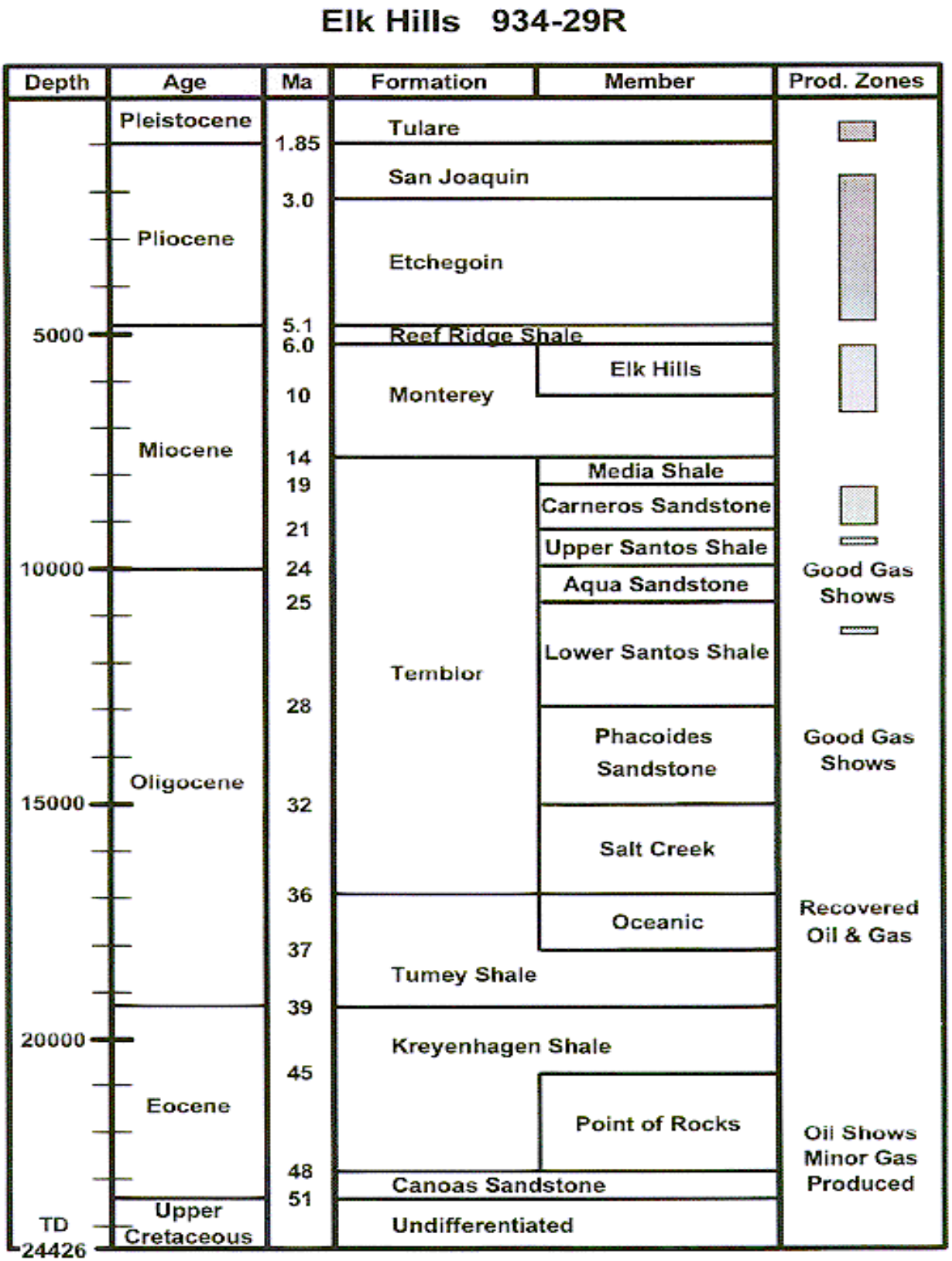

FIGURE 2-7 EHOF STRATIGRAPHY BASED ON 934 29R WELL (NICHOLSON 1990)

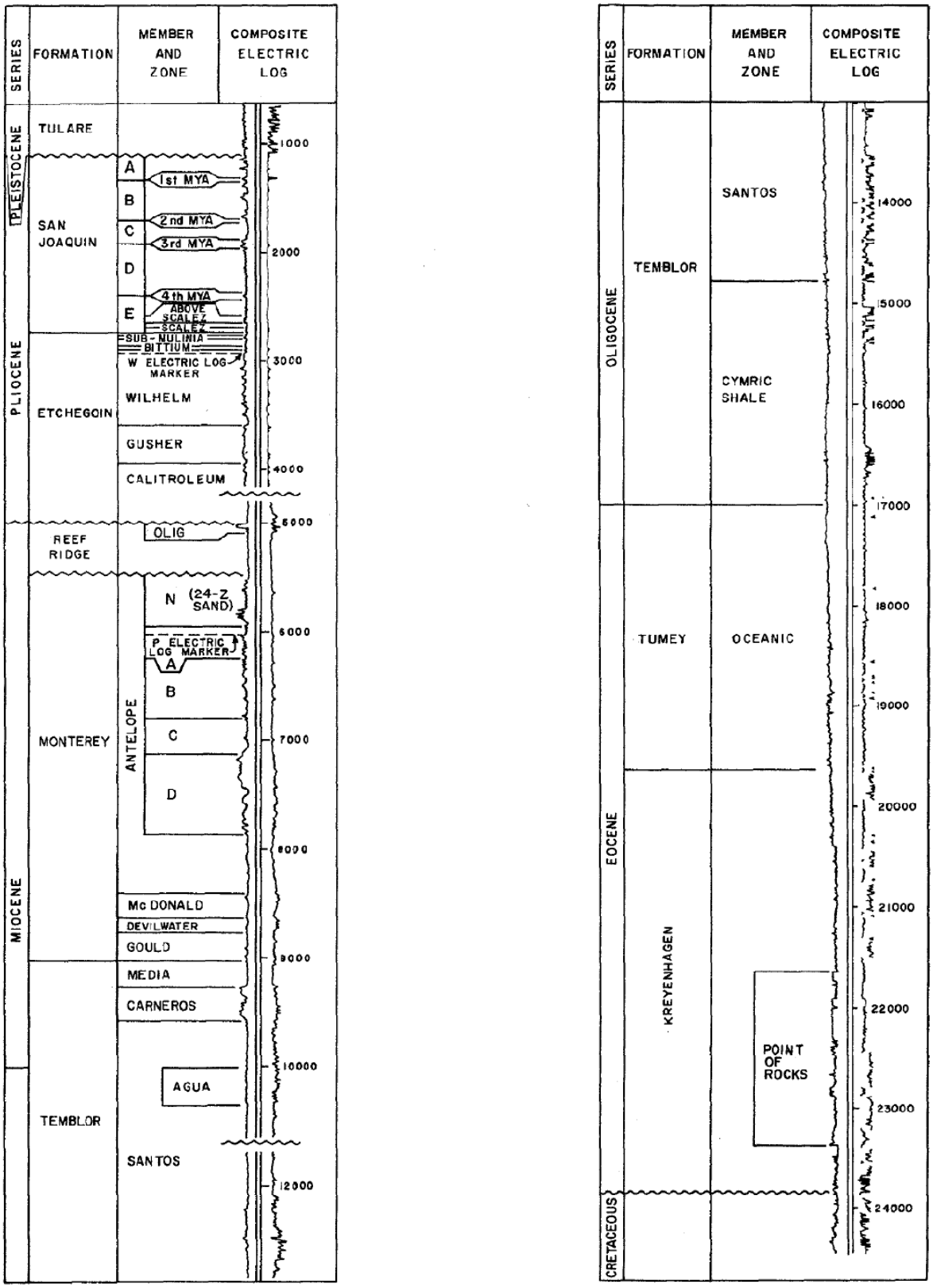

FIGURE 2-8 EHOF STRATIGRAPHIC COLUMN (DOGGR 1998)

The lithology overlying the Reef Ridge Formation is not targeted by the EOR, but the setting must be considered as part of the area of review. Overlying the Reef Ridge Formation is the Pliocene Etchegoin Formation, which includes several productive silty and sandy members (Calitroleum, Gusher, Wilhelm, Bittium and Sub-Mulinia) and intervening shales. Those are, in turn, overlain by the San Joaquin Formation, which includes the productive, basal Scalez sand member and overlying shales (Figures 2-6 and 2-8). These Pliocene rocks represent a depositional transition from deep water to shallow, including near-shore deposition. Isotopic analysis of these Pliocene oils suggests a separate Miocene source for the hydrocarbons in these reservoirs and refutes vertical leakage from the older Miocene Stevens Reservoirs as a source (Zumberger et al, 2005). The Pleistocene (approximately 2.5 million to 10,000 years ago) Tulare Formation is uppermost, from surface to 1,500 feet, in the EHOF and is comprised of fluvial and alluvial (river and surficial) sediments (Nicholson, 1990). The shallow Pliocene and Pleistocene section is cut by several shallow listric faults, some of which are sealing; however, these faults do not traverse through the Reef Ridge Shale and do not extend into the deeper Stevens Reservoirs (C&C Reservoirs, 2000) targeted for the EOR.

In summary, the structure and stratigraphy of the EHOF is ideally suited for the injection and trapping of CO_2. The CO_2 injection zones are within the Stevens Reservoirs. The stratigraphy within the Stevens Reservoirs is porous, permeable and can be very thick, providing an excellent EOR target and ample capacity for long-term CO_2 sequestration. Between the surface and the Stevens Reservoirs, there exist naturally occurring dense and thick overlying shales, which serve as excellent seals and have proven capable of containing fluids and gases for millions of years. While faults are present within the EHOF, these faults are non-transmissive as indicated by variable oil-water contacts, pressures and temperatures within individual Stevens Reservoirs. Furthermore, there are several productive horizons above the proposed injection zone within the Pliocene Etchegoin and San Joaquin Formations (approximately 1,500 to 4,000 feet deep.); however, isotopic evidence shows that the hydrocarbons within the shallow Pliocene reservoirs are not the result of simple vertical leakage from the deeper Miocene Stevens Reservoirs. Consequently, there are no natural pathways from the subsurface injection zones to the surface. Therefore, CO_2 leakage to the surface and atmosphere is highly improbable.

2.2.2 Summary of HECA Siting Study

To accommodate the HECA Project's need for CO_2 sequestration, a scoping/screening siting study was conducted to assess the potential for CO_2 sequestration near the HECA Project site (HECA, 2009). The southern end of the San Joaquin Basin located in and around Kern County and the northern end of the Ventura Basin located in and around Ventura County were targeted based on their carbon sequestration and EOR potential, as well as proximity to the HECA Project location. The study evaluated

capacity, containment, and other specific criteria generally deemed important by current industry and scientific standards in carbon sequestration projects and deemed necessary to satisfy HECA Project objectives. This study identified at least one field within each basin that met these key factors of depth, pressure, lithology, porosity and permeability, structural integrity, and capacity:

- EHOF in the San Joaquin Basin, Kern County
- Ventura Field in the Ventura Basin, Ventura County

Based on this scoping/screening study, the focus of the subsurface effort was then directed to the EHOF in Kern County. The EHOF was determined to be the preferred field due to data obtained from previous CO_2 pilot studies. Another benefit was a shorter length of CO_2 pipeline to be installed, thereby decreasing construction impacts, time, and cost requirements. All of these findings are best aligned with the HECA Project objectives. The following excerpted discussion sets forth the further detailed study of the EHOF conducted in the site selection phase by the HECA Project (HECA, 2009).

> *"The Stevens Reservoirs are considered the best CO_2 EOR targets within EHOF. These reservoirs have been developed on 10 to 40 acre spacing and have produced in excess of 580 million barrels of oil (mmbo) to date. Reservoir pressure in the MBB sand is near the minimum miscibility pressure of approximately 2,415 pounds per square inch (psi) (Merchant 2006), indicating this reservoir is an ideal candidate for miscible-CO_2 EOR. By analog, documented West Texas miscible-CO_2 EOR's have produced an incremental 10 to 20 percent of oil, on average (Holtz et al. 2005). This range is also consistent with a CO_2 EOR pilot study in the Stevens sand at North Coles Levee field 2 miles east of EHOF conducted by ARCO (MacAllister 1989). The MBB reservoirs represent only a subset of the target Stevens Reservoirs currently suitable for miscible-CO_2 EOR."*

2.2.3 Geologic CO_2 Trapping Capacity

The OEHI site characterization confirms that the Stevens Reservoirs have sufficient volume to trap expected CO_2 deliveries from the HECA Project. Historic production records for the EHOF and injection data show that the volume of oil, gas, and water already extracted from the target injection zones exceeds the volume required to sequester the cumulative (full-life) volume of CO_2 expected from the HECA Project. Available capacity is demonstrated in the following tables.

Stevens Pore Volume Capacity

The Stevens Reservoirs within the 31S and North West Stevens (NWS) structures have been identified as the initial EOR and sequestration reservoirs. These reservoirs contain sufficient capacity to accommodate the injection of more than 20 years of expected CO_2 delivery from the HECA Project while maintaining reservoir pressures consistent with good EOR operating practices and below fracture pressures of the boundary zone. The available reservoir capacities were calculated using extensive available OEHI subsurface databases including electric logs, boring logs and historic extraction performance information.

	Billion Reservoir Barrels
Total Stevens Reservoir Capacity (31S and NWS Structures):	>7.5
Required Trapping Capacity for 20 years of Expected CO_2 Injection	<1.0

Cumulative Voidage to Date, from 31S and NWS Stevens Reservoirs

The table below shows that the net cumulative fluid volume produced to date, from the Stevens Reservoirs on the 31S and NWS structures, exceeds the CO_2 volume expected from the HECA Project.

	Billion Reservoir Barrels
Cumulative Fluid[1] Volume Produced:	>3.4
Cumulative Fluid[1] Volume Injected:	<2.1
Cumulative Net Fluid[1] Volume Produced:	>1.3
Required Trapping Capacity for 20 years of Expected CO_2 Injection:	<1.0

[1] Includes oil, gas, and water

In addition to the available capacity calculated above, during EOR operations, the additional production of oil, gas, and water will create further reservoir void that will allow for injection of additional CO_2.

2.3 CO_2 Handling Processes

The production facilities required for OEHI to operate a CO_2 EOR process at the Elk Hills Unit will consist of the following primary production units:

- CO_2 Injection and Recovery Equipment
  - CO_2 Supply System
  - Satellite Gathering Stations
  - Infield Gathering and Injection Distribution Pipelines
- Recovered CO_2 Purification and Compression
  - Central Tank Battery (CTB)
  - Reinjection Compression Facility (RCF)
  - CO_2 Recovery Plant (CRP)
  - Water Treatment Plant
- Backup CO_2 Injection Facility

Figure 2-9 provides a basic process flow diagram for the planned production facilities. Numeric values shown on the figure are preliminary and subject to change as additional engineering design efforts are completed. Figure 2-10 presents an aerial view of the Elk Hills Unit, indicating locations of each of the major production facilities and associated pipelines. Figure 2-10 also serves as a key to a series of aerial views of each Section containing project components. This series of Section-by-Section aerial views is presented in Appendix A.

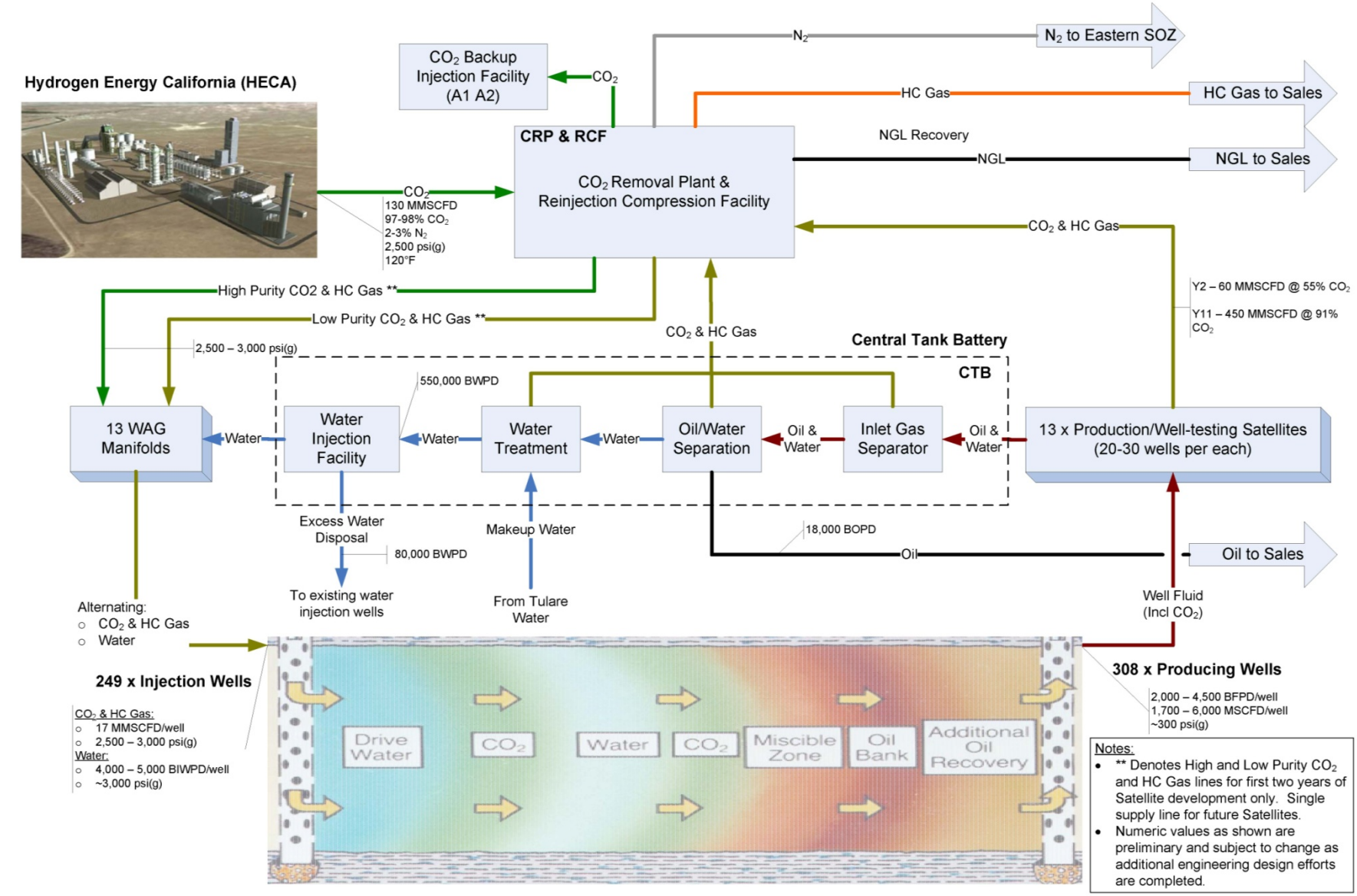

FIGURE 2-9 BASIC PROCESS FLOW DIAGRAM OF PLANNED CO_2 EOR PRODUCTION FACILITIES

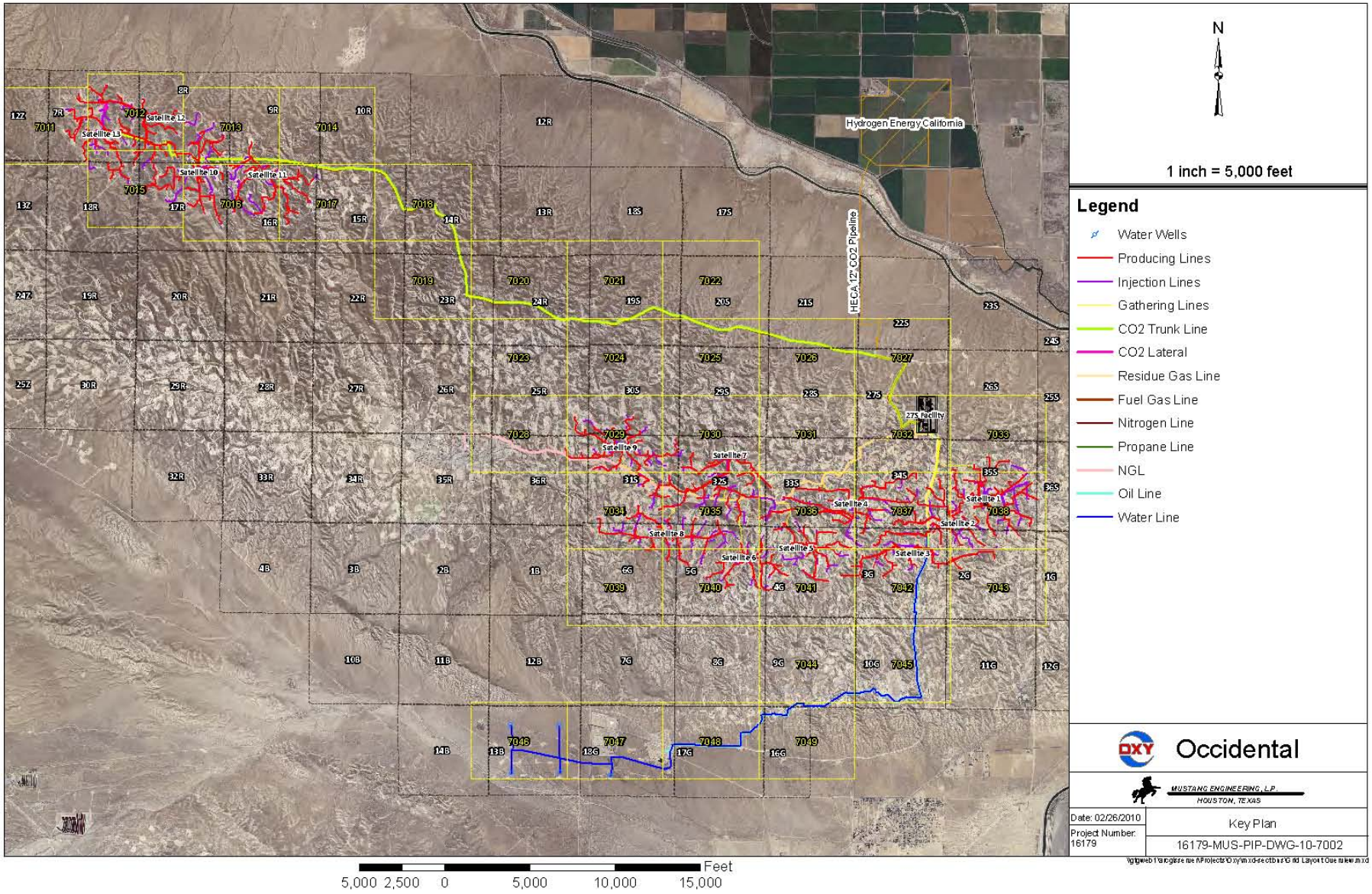

FIGURE 2-10 PROJECT OVERVIEW AND KEY PLAN FOR APPENDIX A

To facilitate CO_2 EOR from the Stevens Reservoirs, recovered fluids from the production wells will flow to one of 13 Satellite Gathering Stations, with three online initially and 10 additional systems added over time. The initial three Satellite Gathering Stations will be sufficient to accommodate CO_2 volumes provided by the HECA Project. The Satellite Gathering Stations will separate any produced gas from the oil and water. Installation of systems will start in the eastern portion (Sections 35S and 2G) and progress westerly (through Section 34S, 3G, 33S, 4G, 32S, 5G, 31S, 6G) as reservoir development evolves. Approximately 10 to 12 years after startup, injection systems will be installed in the northwest area (7R, 8R, 9R, 16R, 17R).

After separation, the gas and oil/water will flow separately via the infield gathering lines to the main process units for further processing. The liquid will flow to the CTB where the oil and water will be separated. The oil will be pumped to the existing oil shipment facility located at Section 18G of the Elk Hills Unit for export and sale. Produced water will be treated at the water treating portion of the CTB and pumped at injection pressure to the Satellite Gathering Stations for reinjection. All produced water will be reused in the reinjection process.

Produced gas from the Satellite Gathering Stations will initially flow to the RCF. At the RCF, the CO_2 gas will be dehydrated, compressed, blended with CO_2 purchased from the HECA Project, and reinjected in a closed loop system. As the volumes of recycled CO_2 increase over time, a CRP will be constructed to separate CO_2 from produced hydrocarbon gas and recycle the separated CO_2. The CRP will consist of several processing units for the separation of the CO_2 from the recovered natural gas.

The CO_2 from the CRP will be compressed and combined with the compressed CO_2-rich gas from the RCF and then combined with purchased CO_2 from the HECA Project. The CO_2 for injection will then be compressed to the required injection pressure and distributed back to the WAG units via CO_2 injection lines. The CO_2 and the injection water will be routed via the WAG manifold where the injection fluid will alternately be injected downhole as needed.

A backup CO_2 injection facility will be constructed at the A1/A2 producing reservoirs in the northwest area of the Elk Hills Unit. This facility will be constructed and available for:

1. Pressurization of the A1/A2 reservoirs for additional CO_2 EOR production; and,
2. Sequestration of CO_2 should there be a short term operating disruption at the HECA or Elk Hills facilities or an imbalance of supply and demand of CO_2.

OEHI will install a pipeline for CO_2 transport to the A1/A2 area in the northwest area of the Elk Hills Unit (Sections 7R, 18R).

Each of these processes is discussed in further detail below.

2.3.1 CO_2 Injection and Recovery Equipment

2.3.1.1 CO_2 Supply System

The CO_2 piped from the HECA plant will be received by the CO_2 supply system portion of the OEHI CO_2 Facility. The CO_2 supply system is the portion of the facility where recycled CO_2 from the RCF/CRP, combined with the supply CO_2 from the HECA Project, is compressed to the injection pressure.

In the initial years of CO_2 EOR operations, the average CO_2 content in the produced gas is relatively low. As a result, only the RCF equipment is initially required to process the lower quantities of CO_2. When CO_2 injected in the reservoir reaches the production wells in larger quantities, "breakthrough" has occurred. At this point, the CRP will be constructed to recover the larger quantities of CO_2.

The proposed plan is to inject two different levels of CO_2 purity during the initial years of CO_2 EOR. The recycled gas from the RCF will be blended with high-purity supply CO_2 from the HECA Project and injected as low-purity CO_2, while the rest of the supply CO_2 will be injected as high-purity CO_2. The high-purity CO_2 will be injected into the wells/areas that are just starting the CO_2 flood cycle, while the low-purity CO_2 will be injected into the areas that have been under CO_2 flood for some time.

This concept for the segregation of the CO_2 in the early years of the OEHI CO_2 EOR Project results in a design that has two separate headers and injection pumps: one for the high-purity system and a second for the low-purity system. Recycled gas from the RCF will flow to the low-purity header. CO_2 from the HECA Project will be mixed with this gas under flow control to maintain the desired concentration of the low-purity injection gas. The mixture will be compressed to the required injection pressure and injected through the low-purity discharge header. The remaining CO_2 from the HECA Project will flow under controlled pressure to the high-purity header.

2.3.1.2 Satellite Gathering Stations

The Satellite Gathering Stations (Satellites, also known as Production/Well-testing Satellites) will be a series of facilities that will provide primary separation of the oil/water and gas from the production well stream. Initially, three Satellites are scheduled to be installed to handle the expected production for the first several years of the field development. Ultimately, 13 Satellites are scheduled for full field development. Two different designs for Satellites are planned: one designed for 30 production wells and the second designed for 20 production wells. These two 'standard'-sized Satellites are expected to handle the overall field configuration for the CO_2 EOR.

Each Satellite has an inlet manifold in which well flow lines associated with that Satellite are connected. Flow from each well flow line will be diverted into either the production separator or the test separator via automated manual valves.

- The production separator is a two-phase separator to handle primary vapor liquid separation of the fluid recovered from the production wells at each Satellite. Oil/water mixture will be separated from gases and flow under level control into the liquid gathering line and be routed to the CTB for further processing. The gases will be separated and routed to the inlet of the RCF and later the CRP. The entire field production pressure will be controlled at the RCF/CRP inlet header and the individual Satellites will 'float' on that pressure. Liquid and gas flow rates will be metered for production trending and monitoring.

- The test separator will be a three-phase, bucket and weir separator to allow for a 24-hour test cycle of each well serviced by that Satellite. The oil and water will be controlled by level control and the gas will be controlled by a back-pressure controller to hold the test separator pressure slightly above that of the associated production separator. Oil, water and gas from the test separator will be re-combined and directed to the inlet manifold and then to the production separator.

The Satellite also contains the water alternating gas (WAG) injection manifold. As described previously, water is injected under pressure to enhance the recovery of CO_2-oil mixture at the production wells. Alternating gas (CO_2) and water injection is a technique proven to enhance the recovery of oil. The CO_2 and water to be injected will be routed from the CRP/RCF via the high-pressure injection lines to the Satellite and to the WAG manifold. The WAG manifold for the initial Satellites will consist of three separate inlet headers:

1. Low-Purity CO_2
2. High-Purity CO_2
3. Injection Water

CO_2 or injection water will be manually directed from the manifold into the injection line from the manifold to the various injection wells. The injection fluid, CO_2 or water, will be metered at the WAG and flow will be controlled by an automatic choke at the injection well head.

2.3.1.3 Infield Gathering and Injection Distribution Flow Lines

The infield gathering flow lines and the injection distribution flow lines tie the various elements of the overall facilities together. The lines (four or five depending on

Satellite configuration) will be installed in a common trench or pipe-rack support for safety consideration and for ease of installation. Each Satellite will have a dedicated set of flow lines running to and from the Satellite and the CTB or RCF/CRP.

Flow lines planned for the OEHI CO_2 EOR Project include:

- 12-, 16- and 26-inch Gas Gathering lines
- 10-, 12- and 16-inch Liquid Gathering lines
- 10-, 12- and 16-inch Water injection lines
- 4-, 6- and 12-inch CO_2 injection lines

Satellites constructed later in the EOR project (after the first five or six) will only need a single 6-inch CO_2 injection line as the dual purity requirement for CO_2 handling will no longer be required as the average CO_2 content increases.

Additional preliminary design specifications for flow lines and wells include:

- Normal Operating Pressure – 300 - 400 pounds per square inch gauge (psig)
- Normal Operating Temperature - 20 – 140ºF, nominally assumed to be 110˚ F for simulation
- Maximum Allowable Working Pressure for the flow lines – 2,500 psig
- Average Production Well Flow Rate (at peak water rate) - Eight barrels oil per day (bopd)
- Average Injection Well Flow Rate (at peak water rate) - 4,550 bwpd or 59 thousand cubic feet CO_2 per day (mcfd)
- Average Production Well Flow Rate (at peak oil rate) - 300 bopd
- Average Injection Well Flow Rate (at peak oil rate) - 2,270 bwpd or 5057 mcfd CO_2
- Average Production Well Flow Rate (at peak gas rate) - 149 bopd
- Average Injection Well Flow Rate (at peak gas rate) - 2,234 bwpd or 5,956 mcfd CO_2
- Test Separators design rate - 500 bopd or 4,000 bwpd or 3 mcfd CO_2

2.3.1.4 Injection and Production Well Design Basis

Injection wells will conform to the provisions of DOGGR Class II UIC permits. Wellheads with CO_2 compatible metallurgy and corrosion-resistant coatings that are design-rated for the permitted injection pressure will be used on the injection wells. Casing on the injection wells is protected by cement on the exterior and the interior will be isolated from CO_2 by the injection packer. Wellheads with adequate design pressure rating on producing wells will be used, and will be protected by the injection of corrosion inhibitor chemicals to prevent any damage. A sample Class II UIC permit application for initial well construction will be provided to the California Energy Commission (CEC).

2.3.2 Recovered CO_2 Purification and Compression

2.3.2.1 Central Tank Battery

The CTB is the primary oil/water separation system for the CO_2 EOR process and will be collocated with the RCF and CRP at the CO_2 Facility at Section 27S of the Elk Hills Unit. It will consist of an inlet header system, gas separators, gas flume and vortex tanks (VT) for oil/water separation. The inlet liquid gathering lines from the Satellites will flow to the inlet liquid manifold where the oil and water will be manually directed to one of the three gas separator tanks.

The gas separator tanks will be designed for two-phase separation of the vapor and liquid. Two gas separators will be installed initially, with the third unit added as needed to handle the increasing liquid production. Gas from the CTB is transported to the inlet of the gas processing facilities, the CRP and RCF.

The liquid from the gas separators flows under level control to the gas flume where the oil and water are further de-gassed. The gas flume and VT will be designed based on two units operating at a maximum design capacity of 50 percent. One unit will be installed initially. The second unit will be installed when liquid production increases above 50 percent of maximum design capacity for the first unit. The gas from this process is combined with the gas from the gas separators. The oil and water from the flume flows by gravity to the VT where the oil and water separates by gravity. The VT is fitted with nozzles to impart a vortex spin to the water in the tank, allowing the water to remain in the tank longer and increasing separation. The oil is skimmed off the top of the VT and flows to the oil tanks, where it is pumped to Section 18G and metered for sale. The partially treated water flows to the water treating facilities.

2.3.2.2 Reinjection Compression Facility

The RCF is the first portion of the CO_2 treating/recovery facilities to be installed. It will consist of three two-stage, electric motor driven, centrifugal compressor systems each sized at 50 percent of design capacity. The third unit will function as a redundant spare and will provide for enhanced uptime and reliability. Each of these systems ("trains") will have an inlet scrubber and discharge air cooler on each of the two stages of compression. The RCF will be sized for a nominal flow of approximately 214 mmscfd or 107 mmscfd per train. The inlet pressure to the compressor trains will be controlled by a variable speed gearbox between the motor and compressor to adjust the compressor speed to maintain the required inlet pressure with capacity for each train being set by a load sharing controller.

Prior to compression, the inlet gas will first flow to the inlet gas separator to remove any condensed liquids from the gathering line. Next, the gas will flow to the inlet gas filter and coalescer to remove particulates from the inlet gas. The gas will then be dehydrated by a standard triethylene glycol (TEG) dehydration system to the CO_2 water content specification. This early dehydration step will allow for the use of standard carbon steel (CS) material throughout the RCF.

Both RCF trains will be installed during the initial plant construction. The RCF will have sufficient capacity to operate for approximately the first 4 years of production. By that time, the CRP will be installed and both plants will operate at partial load until peak gas rate is reached approximately 6 years later.

Figure 2-11 presents a basic process flow diagram for the RCF and CRP facilities. Numeric values shown on the figure are preliminary and subject to change as additional engineering design efforts are completed.

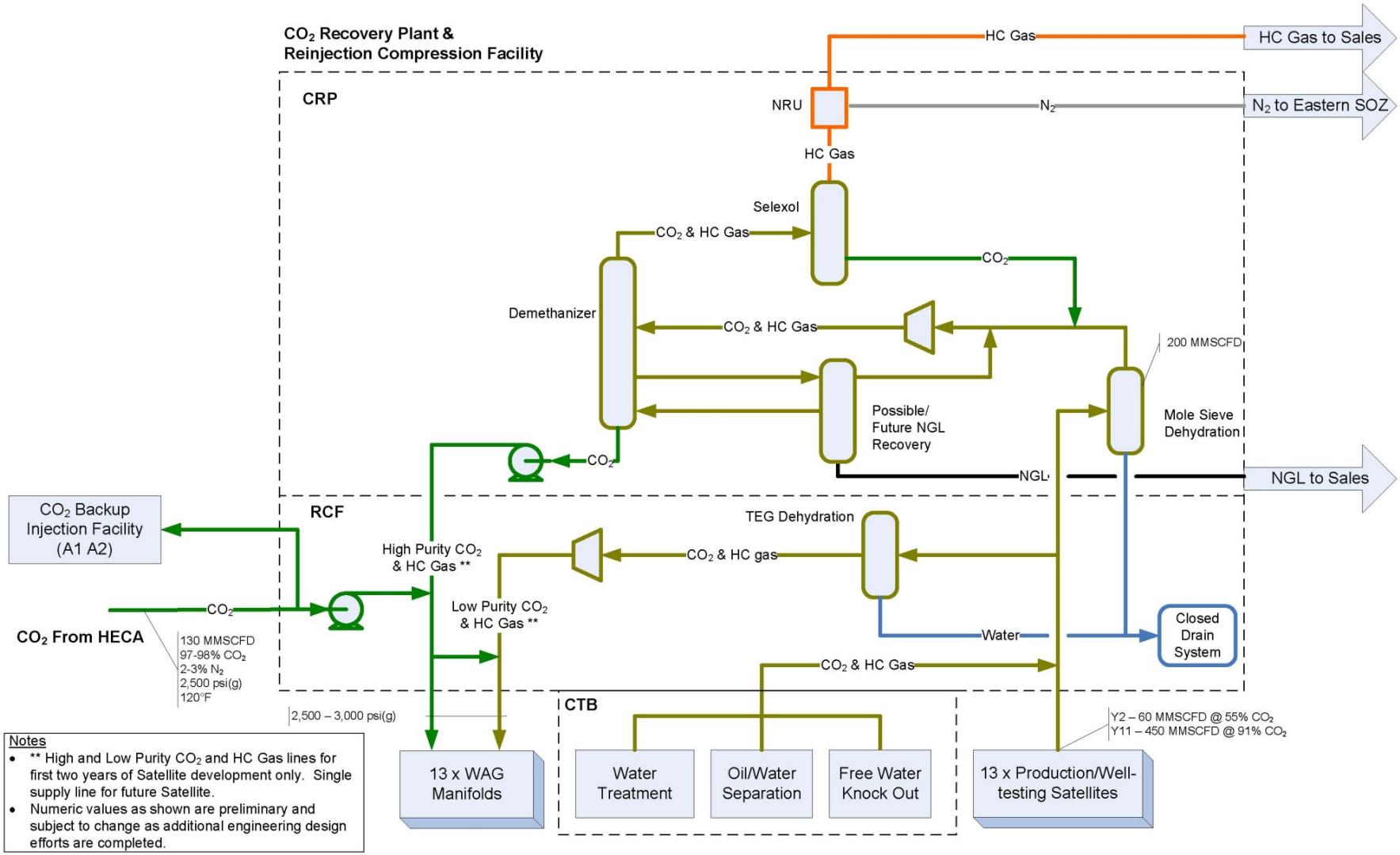

FIGURE 2-11 BASIC PROCESS FLOW DIAGRAM FOR THE RCF AND CRP FACILITIES

2.3.2.3 CO_2 Recovery Plant

The CRP is the second part of the gas treating/recovery plant. The CRP consists of six primary elements: (1) Fractionation System - for bulk CO_2 recovery, (2) a Natural Gas Liquids (NGL) Recovery System – for fluids from the associated gas, (3) Demethanizer System – for bulk CO_2 recovery, (4) Selexol Unit - for final treatment of the hydrocarbon gas, (5) Refrigeration system - for process cooling and (6) Nitrogen Rejection Unit.

Fractionation System

The Fractionation system will consist of a Mol Sieve dehydration package, booster compressor and a demethanizer fractionation tower with its associated heat exchangers. Inlet gas from the gas header will first flow to the inlet gas separator to remove any condensed liquids (condensate) from the gathering line. Next, the gas will flow to the inlet gas filter and coalescer to remove particulate matter from the inlet gas. The gas will then flow though the Mol Sieve dehydrators where water is removed to prevent ice or hydrate formation in the cold sections of the Fractionation system. The Mol Sieve dehydration system will consist of three beds, two dehydrating and one bed in regeneration. The regeneration will be done by withdrawing a small slipstream of the dehydrated gas downstream of the Mol Sieve bed. This regeneration gas will be compressed and heated in a regeneration gas compressor and heater. This heated gas will then flow through the Mol Sieve bed to drive out/boil out the absorbed water from the Mol Sieve material. The regeneration gas from the top of the bed will be cooled in an air cooler and the condensed water removed in the regeneration gas separator. The regeneration gas is then routed to upstream of the Mol Sieve bed to be dehydrated again.

The booster compressor will consist of two units (“trains”) each sized at 50 percent of the required total capacity. These trains will consist of single-stage, electric motor driven, centrifugal compressor systems. Each train will have an inlet scrubber and a common discharge air cooler. The booster compressors will be sized for a nominal flow of approximately 205 mmscfd based on the nominal feed rate of 200 mmscfd to the fractionation system plus recycle flows from the Selexol system and the NGL recovery system. The inlet pressure to the compressor trains will be controlled by a variable speed gearbox between the motor and the compressor to adjust the compressor speed to maintain the required inlet pressure with capacity for each train being set by a load sharing controller.

Gas flow from the booster compressors are split with some of the hot discharge gas flowing under temperature control through the Demethanizer (De-C1) reboiler to provide most of the heat needed for the fractionation process. The flow through the reboiler is controlled to meet process requirements in the fractionation tower. The

remainder of the hot discharge gas flows through the discharge air cooler where the rest of the heat of compression is removed. The cooled gas from the discharge cooler is then recombined with the slip stream used for heat in the reboiler.

The total inlet gas stream then flows through a series of heat exchangers to further cool the feed to a low temperature to feed the De-C1. The heat exchangers are comprised of the following components:

a. Side reboiler – Further process heat is removed from the feed to provide heat for the fractionation tower.
b. Feed/Overhead exchanger – For recovery of cooling from the cold overhead gas stream from the Demethanizer.
c. Demethanizer feed gas chiller – Cooling with propane refrigeration to final process operating conditions.

Between the feed/overhead exchanger and the gas chiller, the partially condensed feed gas is sent to the NGL Recovery system. The temperature of this stream controls the amount of CO_2 that is condensed to liquid. The temperature must be low enough to condense most of the recoverable NGLs, but not so low as to condense the CO_2 that would be recycled to the inlet and increase booster compressor requirements.

NGL Recovery System

In the NGL Recovery system, the partially condensed inlet gas is flashed in a two-phase vertical separator. The uncondensed CO_2 is returned to the main heat exchanger train for further cooling and fed to the Demethanizer, and the cold condensed liquid is fed to the top of the NGL stabilizer. Heat from the electric reboiler vaporizes some of the liquid and provides stripping gas for mass transfer operation in the stabilizer. The lighter components (e.g., CO_2) are boiled out and the NGL product then flows from the bottom of the tower where it is cooled and pumped to storage. The CO_2 that is stripped from the NGL system feed flows from the stabilizer overhead and is recycled to the booster compressor inlet. NGLs recovered from this process will be piped to 35R for combination with liquids from existing processing facilities.

Demethanizer System

Demethanization is a process in which the inlet gas is chilled through various heat exchangers and refrigeration. The chilling of the gas condenses most of the CO_2 out of the gas stream (also called bulk removal of CO_2) and allows it to be separated in a tower called the Demethanizer tower. The CO_2 is then pumped back to the field for reinjection. The gas stream off the top of the Demethanizer is sent to the Selexol process to recover the remaining CO_2.

Selexol Unit

After bulk CO_2 recovery in the Fractionation system, the remaining gas flows to the Selexol system for final CO_2 recovery and gas treatment to meet the export gas specification. Selexol is a physical absorbent to remove CO_2 and hydrogen sulfide (H_2S), if present, from the natural gas. The absorption occurs in the Selexol contactor where a solvent, dimethyl ethers of polyethylene glycol (DEPG), flows counter currently downward against the gas to be treated. DEPG is generally regenerated by mixture of heating or pressure reduction to flash the CO_2 from the solvent.

The cool inlet feed gas is cross exchanged with cold residue gas from the contactor overhead in the inlet gas/sales gas exchanger. The cooled feed gas is then fed to the bottom of CO_2 absorber and flows upward counter current to the solvent and treated gas exits from the top of the absorber and flows to the inlet cross exchanger. The CO_2-rich solvent is flashed to a lower pressure, approximately 250 psig. The flash gas, which is relatively rich in hydrocarbons, is compressed and recycled to the inlet of the Selexol unit so that the CO_2 can be absorbed.

The semi-rich solvent is then flashed to consecutively lower pressures with the last stage of flash at vacuum. The flash gas from these regeneration flash separators is compressed in a multi-stage compressor to approximately 250 to 300 psig and the CO_2 is recycled to the inlet of the CO_2 Fractionation system where the CO_2 is recovered.

The lean solvent from the last stage of flash regeneration is filtered and cooled with propane to approximately 15˚F and pumped under flow control to the top of the CO_2 absorber.

The Selexol unit is followed by a cryogenic Nitrogen Rejection Unit (NRU) to reduce the nitrogen content from approximately 38 percent to a total of 4 percent of inerts. Supplemental compression will be added downstream of the NRU to boost the sales gas to the required delivery pressure of 1,200 psig.

Refrigeration System

The primary utility system for the CRP is a propane refrigeration system. The propane refrigeration system will consist of two units (“trains”) each sized at 50 percent of the required total capacity. Each train will consist of a four-stage, centrifugal compressor package. The refrigeration will be produced at two temperature levels: 10˚F for the inlet feed gas chiller and the Selexol chiller and -35˚F for the Demethanizer overhead condenser.

Nitrogen Rejection Unit

The treated gas that comes off the Selexol absorber contains some amounts of CO_2 (approximately 3 percent) and Nitrogen (approximately 38 percent) that need to be removed in order for the hydrocarbon gas to meet the pipeline sales specification. This treated gas goes to the NRU to separate these components. The NRU contains a small acid gas removal unit to separate out the CO_2; the CO_2 goes to the vapor recovery unit and is recycled back to the RCF and CRP. The nitrogen is separated from the hydrocarbon gas by chilling and liquefying the hydrocarbon gas. The nitrogen is then compressed and sent to injection wells at the eastern Shallow Oil Zone (SOZ) in the Elk Hills Unit. The hydrocarbon gas is then vaporized, compressed, and put into a gas pipeline.

2.3.2.4 Water Treatment Plant

The oily water from the inlet section of the CTB flows to additional treatment to remove oil, solids and other contaminants from the produced water. It is then pressurized in the injection pumps and sent to the Satellites for injection.

From the VT, the oily water flows under level control to a series of flotation cells. In the flotation cell, fuel gas is introduced to enhance coalescing of oil droplets in the oily water to remove the oil from the water. The partially treated water is then pumped by filter charge pumps through filters to remove solids from the produced water. The water then flows to the water tanks that serve as a surge volume for the system. Makeup water from the Tulare formation is pumped by electrical submerged pumps via a new 10-inch pipeline to the CTB for periods when the CO_2 is not available from the HECA Project. It is introduced into the water system upstream of the filters to allow for filtering and also for solids removal.

From the water storage tanks, the produced water is pumped by booster pumps and the water injection pumps to the water injection distribution system and then via the water injection to the WAG manifolds at the Satellites for injection into the wells. Control is manual with the number of pumps online balanced with the demand for injection water.

Low-pressure gas collected from the flume/vortex in the CTB and the flotation cell in the Water Treatment area is compressed by VRU to approximately 35 psig, where it is combined with gas from the gas separator. The combined low pressure gas stream is then compressed by the low-pressure compressor and routed to the inlet of the RCF and CRP for processing.

2.3.3 Backup CO_2 Injection Facility

A backup injection facility will be constructed at the A1/A2 producing reservoirs in the northwest area of the Elk Hills Unit. This facility will be constructed and available for:

1. Pressurization of the A1/A2 reservoirs for additional CO_2 EOR production

2. Sequestration of CO_2 should there be a short-term operational disruption at the HECA Project or Elk Hills facilities or an imbalance of supply and demand of CO_2

OEHI will install a pipeline for CO_2 transport to the A1/A2 area in the northwest area of the Elk Hills Unit (Sections 7R, 18R). Flows of CO_2 to the A1/A2 reservoir will be monitored in the same fashion as those flows to the primary injection zones.

On the discharge side of the CO_2 injection pumps is a pressure control valve that will route excess CO_2 to the Backup CO_2 Injection Facility, should there be a localized imbalance. This is matched by a second pressure control valve on the supply line from the HECA Project downstream of the custody transfer meter to also route excess CO_2 to the Backup CO_2 Injection Facility. It opens as the backpressure on the supply line increases indicating excess flow from the HECA Project over the flow from the CO_2 injection pumps to the injection wells. The third system works in conjunction with the upstream pressure controller on the HECA Project supply line. This third system is a direct pathway independent of the pressure controllers to route all the HECA Project supplied CO_2 to the Backup CO_2 Injection Facility, should there be a operational disruption at the CO_2 Facility (eg., a power failure).

3 Supporting Process Systems

3.1 Hazardous Material Management

A variety of hazardous reagents and materials will be stored and used at the OEHI CO_2 EOR Project in conjunction with construction, operation, and maintenance of the OEHI CO_2 EOR Project. In general, the type and character of these materials will be the same as those used today at the Elk Hills Unit.

Construction

Hazardous materials used during the construction of the OEHI CO_2 EOR Project would mainly be limited to fuels and construction materials, including:

- Gasoline, diesel fuel, and motor oil for construction equipment
- Compressed gas cylinders containing oxygen, acetylene, and argon for welding
- Paint and cleaning solvents
- Concrete form release
- Miscellaneous lubricants, adhesives, and sealants

Each construction contractor will be responsible for maintaining a set of Material Safety Data Sheets (MSDSs) for each onsite chemical they control and notifying their construction workers where these chemicals are stored and the associated hazards.

The most likely accidents involving hazardous materials during construction might occur from small-scale spills during cleaning or use of other materials in the storage areas or during refueling of equipment. Such spills will be immediately cleaned up and materials containing hazardous substances will be properly disposed in accordance with applicable laws, ordinances, regulations and standards (LORS).

Operations

Hazardous materials that may be routinely stored in bulk and used in conjunction with the OEHI CO_2 EOR Project operations include, but are not limited to, petroleum products, flammable and/or compressed gases, cleaning chemicals, paints, and some solvents. Table 3-1, Hazardous Materials Usage and Storage during Operations, lists each material and describes the approximate annual quantity needed and use of the material during operations.

TABLE 3-1 HAZARDOUS MATERIALS USAGE AND STORAGE DURING OPERATIONS[1]

Material	Potential Hazardous Characteristics[2]	Purpose	Storage Location	Maximum Quantity Stored	Storage Type
Compressed Carbon Dioxide Gas[3]	Asphyxiant	EOR fluid; received from HECA; recovered from production wells	Outdoor	TBD	No aboveground storage, in process and transport pipelines only
Nitrogen[3]	Asphyxiant	Byproduct of hydrocarbon gas production and CO_2 separation, inert gas	Outdoor	TBD	No storage, in process and transport pipelines only
Natural Gas Liquids (NGL)	Flammable	Sales Product of Oil Recovery	Outdoor at 27S and transporte d to 35R plant via pipeline	TBD	No storage, in process and transport pipelines only
Produced Hydrocarbon Gas	Flammable	Sales Product of Oil Recovery	Outdoor at 27S and transporte d to 35R plant via pipeline	TBD	No storage, in process and transport pipelines only
DEPG or dimethyl ethers of polyethylene glycol	Flammable	Used in Selexol process for CO_2 recovery	Outdoor at 27S	TBD	AST with secondary containment
Chemical Reagents (acids/bases/ —standards)	Corrosivity, Reactivity	Lab	Indoor chemical storage	<5 gallons	Small original containers

Material	Potential Hazardous Characteristics[2]	Purpose	Storage Location	Maximum Quantity Stored	Storage Type
Miscellaneous Industrial Gases – Acetylene, Oxygen, Other Welding Gases, analyzer calibration gases	Ignitability, Toxicity	Maintenance Welding/ Instrumentation Calibration	Gas cylinder storage in Shop/ instrument shelters	Minimal	Cylinders of various volumes
Natural Gas	Ignitability	Startup/Backup /Auxiliary Fuel	Supply piping only	Utility supply on demand via pipeline	None
Diesel Fuel	Ignitability	Emergency generator/fire water pump fuel	Outdoors	2,000 gallons	ASTs with secondary containment
Paint, Thinners Solvents, Adhesives, etc.	Ignitability, Toxicity	Shop / Warehouse	Indoor chemical storage area	<20 gallons	Small original containers

Notes:

1 All numbers are approximate.

2 Potential hazardous characteristics based on material properties and potential health hazards associated with those properties.

3 Nitrogen and carbon dioxide are not hazardous materials but may be asphyxiants under some circumstances.

% = percent

< = less than

AST = aboveground storage tank

The storage, handling, and use of hazardous materials will be in accordance with applicable LORS. Storage will occur in appropriately designed storage areas. Bulk tanks will be provided with secondary containment to contain leaks or spills. Safety showers and eyewashes will be provided in appropriate chemical storage and use areas. Personnel who could potentially handle hazardous materials will be properly trained to perform their duties safely and to respond to emergency situations that may occur in the event of an accidental spill or release.

3.2 Hazardous Waste Management

3.2.1 Hazardous Construction Waste

The majority of hazardous waste generated during construction will consist of liquid waste such as waste oil from routine equipment maintenance, flushing and cleaning fluids, waste solvents, and waste paints or other material coatings. Additionally, some solid waste in the form of spent welding materials, oil filters, oily rags and absorbent, spent batteries, and empty hazardous material containers may also be generated.

Construction contractors will be required to employ practices consistent with the proper handling of all hazardous wastes in accordance with applicable LORS. This includes all licensing requirements, training of employees where required, accumulation limits and duration, and record keeping and reporting requirements. Wastes that are deemed hazardous will be collected in hazardous waste accumulation containers placed near the area of generation. After the end of each workday, the accumulation containers would be moved to the hazardous waste accumulation area, where hazardous wastes can be stored for up to 90 days after the date of initial generation. All hazardous wastes will be removed from the construction sites of the OEHI CO_2 EOR Project by a licensed hazardous waste management facility.

Table 3-2 lists the anticipated construction wastes including both hazardous and non-hazardous waste, and identifies the likely disposal method

TABLE 3-2 SUMMARY OF CONSTRUCTION WASTE STREAMS AND MANAGEMENT METHODS[1]

Waste	Waste Classification FIX	Amount	Disposal Method
Used Lube Oils, Flushing Oils	Hazardous or Non-Hazardous	1-10 55 gallon drums per month	Recycle
Hydrotest Water (One time per commissioning, reuse as practical, test for hazardous characteristics)	Hazardous or Non-Hazardous	TBD	Characterize. Drain non-hazardous to the Detention Basin. Dispose of hazardous at a hazardous waste disposal facility.
Solvents, Used Oils, Paint, Adhesives, Oily Rags	Cal-Hazardous[2] Recyclable	Unknown	Recycle or dispose of as hazardous waste.
Spent Welding Materials	Hazardous	Unknown	Dispose at a hazardous waste landfill.

Waste	Waste Classification FIX	Amount	Disposal Method
Used Oil Filters	Hazardous	Unknown	Dispose at a hazardous waste landfill.
Misc. Oily Rags, Oil Absorbent	Non-Hazardous or Hazardous Recyclable	(1) - 55 gallon drum per month	Recycle or dispose at a hazardous waste landfill.
Empty Hazardous Material Containers	Hazardous Recyclable	1 cubic yard per week	Recondition, recycle, or dispose at a hazardous waste landfill.
Used Lead/Acid and Alkaline Batteries	Hazardous Recyclable	No greater than 1 ton per year	Recycle
Sanitary Waste from Workforce (Portable Chemical Toilets)	Non-Hazardous	Approximately 390 gallons per day	Pump and dispose by sanitary waste contractor.
Site Clearing – Grubbing, Excavation of Non-Suitable Soils, Miscellaneous Debris	Non-Hazardous	Minimal	Reuse Soils or dispose at a non-hazardous waste landfill.
Scrap Materials, Debris, Trash (Wood, Metal, Plastic, Paper, Packing, Office Waste, etc.)	Non-Hazardous	Approximately 40 cubic yards per week	Recycle or dispose at a non-hazardous waste landfill.

Notes:
1 All Numbers are estimates
2 Under California regulations

3.2.2 Hazardous Operations Waste

As with construction hazardous waste described above, where appropriate, hazardous waste resulting from operation activities will also be collected in hazardous waste accumulation containers placed near the area of generation. After the end of each workday, the accumulation containers will be moved to hazardous waste accumulation areas where hazardous wastes can be stored for up to 90 days after the date of generation. All hazardous wastes will be properly removed from the OEHI CO_2 EOR Project Site in accordance with applicable LORS.

Table 3-3 lists the anticipated construction wastes which includes both hazardous and non-hazardous waste, and identifies the likely disposal methods.

TABLE 3-3 SUMMARY OF OPERATIONAL WASTE STREAMS AND MANAGEMENT METHODS[1]

Waste Stream	Waste Classification	Anticipated Maximum Amount per Year	Disposal Method
Water Treatment Plant Sludge and Used Water Filter Media	Non-Hazardous	**TBD**	Characterize and dispose as non-hazardous or hazardous waste.
Used Oil	Hazardous	**TBD**	Recycle. Expected to meet the regulatory exemption for used oil when recycled.
Spent Grease	Hazardous	**TBD**	Characterize and dispose as hazardous waste.
Miscellaneous Filters and Cartridges	Hazardous or Non-Hazardous	**TBD**	Characterize and dispose as non-hazardous or hazardous waste.
Tank Bottoms Sludge	Hazardous or Non-Hazardous	**TBD**	Characterize and dispose as non-hazardous or hazardous waste.
Triethylene Glycol	Hazardous or Non-Hazardous	**TBD**	Recycle. Characterize and dispose as non-hazardous or hazardous waste.
Miscellaneous Solvents	Hazardous	**TBD**	Recycle or disposal as hazardous waste.

Waste Stream	Waste Classification	Anticipated Maximum Amount per Year	Disposal Method
Flammable Lab Waste	Hazardous	**TBD**	Characterize and dispose as hazardous waste.
Universal Wastes	Hazardous	**TBD**	Recycle. Characterize and dispose as hazardous waste.
Waste Paper and Cardboard	Non-Hazardous	**TBD**	Recycle.
Combined Industrial Waste (Used PPE, materials, small amounts of refractory, slurry debris, etc.)	Non-Hazardous	**TBD**	Dispose at a non-hazardous waste landfill.

Notes:

1 All Numbers are estimates

2 PPE—personal protective equipment

3.3 Stormwater Management

Clean stormwater runoff from process areas (27S CO_2 Processing Facility) will be routed to an onsite stormwater retention basin during construction activities. Construction project site stormwater runoff in non-process areas but within the main plant area will be routed to a retention basin. Retention basins and stormwater collection/conveyance systems will be designed in accordance with the Kern County Development Standards.

Stormwater from non-process areas outside the main plant area but within the OEHI CO_2 EOR Project Site is expected to reflect natural discharge conditions. Runoff from these areas follows natural drainage patterns of the Elk Hills Unit and will be subject to the California Stormwater Construction General permit, as appropriate.

A project-specific construction stormwater pollution prevention plan (SWPPP) will be developed prior to construction, incorporating the recently updated California Stormwater Construction General permit. The OEHI CO_2 EOR Project stormwater will be managed using best management practices (BMPs), Rainfall Erosivity Waiver, or NOI coverage under California Stormwater Construction General permit, as appropriate.

3.4 Fire Protection

The OEHI CO_2 EOR Project Fire Protection Program includes both fire prevention and protection measures. Employment of conservative equipment layouts, segregation of critical components, and the remote location of non-essential resources, are the backbone of the fire mitigation/suppression measures employed.

Conservative equipment spacing and segregation of potentially hazardous activities from the balance of the OEHI CO_2 EOR Project are the guiding principles employed to protect personnel and property. Automation and sensing equipment will be strategically located throughout the OEHI CO_2 EOR Project to detect and alarm hazardous levels. Oil containment and equipment spacing will isolate large transformers from adjacent facilities. Structural steel will be protected with fire-proofing materials in strategic areas. Grading and paving plans will be prepared to complement this objective.

Preliminary design of the firewater system for the facilities includes a storage tank and two firewater pumps. Detailed design of the system will be performed in later stages of engineering; it will address system layout, automated and manual portions of the .system.

The degree and extent of fire protection and suppression systems provided will be in accordance with applicable LORS, standards, and company guidelines

3.5 Control Systems

CO_2 Gas Plant Facility

The CO_2 Facility will be controlled from a new CO_2 control building within the plant area. The control room is to cover the operation of the RCF, CTB, CRP, Satellites, producing and injection wells. The plant Integrated Control and Safety System (ICSS) will be a Distributed Control System with monitoring, control, and shutdown capabilities. The ICSS shall consist of both a Process Control System and a Safety Instrumented System that are fully redundant and independent of each other. The configuration, maintenance, and operating environment for these systems shall be achieved from the same Human Machine Interface (HMI)/Engineering station. There will be several HMIs that can view and monitor the entire facility and they will be capable of backing up and achieving the same functionality in case one HMI fails.

The new control room will contain Operator Workstations and Engineering Workstations to provide operators a means of interfacing and controlling the CO_2 Facility, and injection and production wells. New CO_2 control equipment will be added

to the existing Elk Hills Unit control system, and will be connected via fiber optic ring from the CO_2 control building to the existing Central Control Facility.

For ease of maintenance and a preferred environment for electronic equipment, the control panels for the Control and Safety System shall be located in non-hazardous air-conditioned buildings inside the CO_2 Facility area.

Satellite Gathering Sites, Production and Injection Well Sites

Each satellite site will have a controller that is used to monitor and control any local satellite processes and conditions. It will communicate back to CO_2 Facility via a fiber optic cable.

A radio and antenna shall exist at each satellite site. The radio will be used to communicate to all the related production and injection wells control panels. The radio signal will then be communicated back to the CO_2 Plant for operator interaction, via fiber optics.

3.6 Utilities

OEHI has existing plans to install a new 320/115 kilovolt (kV) electrical substation and electrical distribution lines in the Elk Hills Unit. This planned upgrade will make up to 500 megawatts (MW) of power available from Pacific Gas and Electric (PG&E) (the local utility company) and will be completed prior to the OEHI CO_2 EOR Project construction. This upgrade will ensure that sufficient power is available to the OEHI CO_2 EOR Project.

Five wells will be drilled and equipped as make-up water wells. They are located in Sections 13B and 18G, and will produce nominally 10,000 bwpd each. Makeup Water pumps transport water to the CO_2 Facility in Section 27S for use as make-up injection water for the reservoirs when the HECA CO_2 gas is unavailable. Potable water will be supplied from the existing potable water system. An internal connection will be added from the 36S potable water tank and system.

The following tie-ins to the project are expected:

Commodity	Tie-In Location	Design Conditions
CO_2 from HECA	Nominally at main plant boundary in 27S	
Fuel Gas	In 35R adjacent to existing gas plants	

Commodity	Tie-In Location	Design Conditions
Water	Tulare water in 13B and 18G, pipeline to 27S	Not potable quality
Propane	Pipeline to 35R plant	HD5 propane
Electric Power	In the SW corner of 28S	115kV, assume required power is available
Potable Water	36S potable water tank	Connection from existing potable water system

3.7 Project Buildings/Facilities

Three new buildings are required at the CO_2 Facility:

- Administration/Control Building
- Maintenance/Warehouse Building
- Compressor Shelters

3.8 Security Systems

The Elk Hills Unit has a fully fenced perimeter with a roving security patrol that operates around the clock. Access into Elk Hills is through manned guard gates where pictured security ID badges are shown to gain entrance to the operations. The CO_2 Facility will be fenced and secure access provided adjacent to the administration/control building. The satellites and pipelines are located within the boundary limits of the Elk Hills Unit, and no additional specific security provisions have been made for these components since a gated security fence limits access at this time.

3.9 CO_2 Monitoring, Measurement, Verification and Closure

3.9.1 Monitoring, Measurement and Verification

As it relates to the HECA Project the CO_2 EOR process will be subject to monitoring, measurement, and verification (MMV) requirements. A site-specific MMV Plan will be developed with the objective of demonstrating permanent trapping of HECA-provided CO_2. The MMV Plan will include consideration of the existing detailed subsurface, seismic, geochemical characterization and wellbore construction details that have

been generated from the extensive data covering the EHOF. Selection of the appropriate suite of tools to satisfy the MMV objectives will be based on an assessment of the potential risks, taking into account the unique characteristics of the EHOF and the performance expectations at the site.

There are several components that will be incorporated into the MMV Plan. OEHI's development plan for the Elk Hills Unit, which includes injection of CO_2 for EOR, will be used to predict the field's future production over a period of many years. Reservoir characterization, which includes geologic and petro-physical analysis, and reservoir simulation modeling will be used to develop reliable recovery forecasts. Reservoir characterization and forecasting will be confirmed by applying the following:

Demonstration of Well Integrity

- Monitoring of wellhead and annular pressures of all wells completed in EOR reservoirs, supplemented by downhole pressure and temperature measurements, where available

- Well integrity monitoring and cement evaluation

Demonstration of Horizontal Containment

- Monitoring of wellhead and annular pressures of wells completed in vertically adjacent reservoirs, supplemented by downhole pressure and temperature measurements in the offset reservoirs, where available

Demonstration of Sequestered Volumes

- Material balance

- Recovered fluid geochemical sampling

In connection with the foregoing, OEHI will supply any requested information to address the following:

- Subsurface data to characterize and represent in 3 dimensions the sedimentary section, structural geology and seismicity of the injection zone and overlying areas

- Subsurface data to characterize and demonstrate that the injection zone is sufficiently porous to receive CO_2 under expected operating conditions and extensive enough to receive the anticipated volume of CO_2 injected

- Subsurface data to characterize and demonstrate that the confining zone is sufficiently impervious to restrict vertical movement of CO_2 beyond the confining zone under expected operating conditions and extensive enough to contain the anticipated volume of CO_2 injected

- Geo-mechanical data to characterize rock stress, rock strength and fault stability

- Over the period of CO_2 injection, geochemical data to characterize formation fluids in the injection zone and the lowermost porous unit above the confining zone

- Over the period of CO_2 injection, well-related injection data to allow physical and chemical characterization of injection fluids, including injection pressure, flow rate and temperature

- Over the period of CO_2 injection, well-related mechanical integrity data to demonstrate integrity of the wellbore such as concrete seals and wellbore packers and other as may be required by permit

3.9.2 CO_2 EOR Well Field Closure

The OEHI CO_2 EOR operations will be closed after all economic production of hydrocarbons has been exhausted, which is not expected for at least 20 years. The closure phase consists of site decommissioning, well plugging and abandonment, and appropriate post-injection care and monitoring. In addition to those measures generally required for closure of UIC Class II wells, OEHI will conduct closure activities that demonstrate that the injected CO_2 is properly contained within the confinement zone and is not endangering human health or the environment. Closure will be conducted pursuant to a post-injection closure plan that will be performance-based and specifically tailored for the OEHI CO_2 EOR Project.

4 Project Construction

OEHI is currently in the early stages of project economic and engineering development. Specific details regarding project construction are not yet available. As OEHI moves through its project development FEED process, this section will be populated and submitted to interested parties.

This section will contain the following material when completed:

4.1 Project Site Construction

4.2 Construction Planning

4.3 Mobilization

4.4 Construction Facilities, Parking, and Lay-down Areas

4.5 Emergency Facilities

4.6 Construction Utilities and Site Services

4.7. Construction Materials and Heavy Equipment Deliveries

4.8 Hazardous Materials Storage

4.9 Construction Disturbance Area

4.10 Stormwater Runoff Prevention Plan

4.11 Linear Construction

4.12 Construction Workforce

4.13 Construction Equipment Requirements

4.14 Construction Traffic

5 Project Operation Scenarios

OEHI is currently in the early stages of project economic and engineering development. Specific details regarding project operation are not yet available. As OEHI moves through its project development FEED process, this section will be populated and submitted to interested parties.

This section will contain the following material when completed:

5.1 Startup Operations

5.2 Normal Operations

5.3 Upset Operations

5.4 Shutdown and Decommissioning

5.5 Project Staffing

6 Facility Safety Design

Occidental has a long-standing commitment to protecting community, employee and contractor health and safety, and the environment. Maintaining strong health, environment, safety and security (HES&S) programs is one of Occidental's highest priorities and the company strives for continual improvement in HES&S performance.

OEHI has a management system that effectively coordinates HES&S activities. This Health, Environment and Safety Management System (HESMS) includes the following seven elements:

Basic HESMS Elements	Description
Leadership and Commitment	Addresses management's commitment to the Occidental Petroleum Corporation's HES&S Principles, Policy Statement and the management culture essential to success.
Policy and Strategic Objectives	Address corporate intentions, principles of action and HES&S goals.
Organization, Resources and Documentation	Addresses organizing people, resources and documentation for sound HES&S performance.
Evaluation and Risk Management	Addresses identifying and evaluating HES&S risks for activities, products and services, and developing risk reduction measures.
Planning	Addresses planning work activities, including planning for change and emergency response.
Implementation and Monitoring	Addresses HES&S performance and monitoring activities and necessary corrective action.
Auditing and Reviewing	Addresses periodic assessments of systems performance, effectiveness and fundamental suitability.

Integration of Safety and Health into Management Planning

At OEHI, HES&S includes the functional areas of occupational health, industrial hygiene, safety, product stewardship, process safety, transportation and pipeline safety, environmental protection, remediation, physical security and management of risks pertaining to the foregoing areas. The entire OEHI organization – including the OEHI Leadership Team and all plant and field managers, supervisors, employees and contractor personnel – are responsible for implementing the HESMS and are accountable for HES&S performance.

Operation, maintenance, and safety design features at the Elk Hills Unit will ensure that all Project-related surface equipment, including but not limited to, well safety systems, wellheads, separators, pumps, manifolds, valves, and pipelines used for the OEHI CO_2 EOR Project, will be maintained in good condition at all times to safeguard life, health, property, and natural resources.

Safety Philosophy

OEHI's management, employees and contractors are committed to continuously reducing workplace hazards while striving for an injury-free workplace. Safety and health philosophy and expectations are summarized in the Elk Hills Safety Credo, which is distributed to OEHI employees and contractor personnel, and summarized below:

- Safety is a core business value
- All accidents are preventable
- Working safely is a condition of employment
- No job is so important that it cannot be done safely
- Safe production is our standard

Each employee and contractor is responsible for his or her safety and the safety of others while working on OEHI properties. The HES&S Department is responsible for ensuring that there are effective programs to protect the health and safety of employees, contractors, subcontractors, visitors and neighbors.

Safety and health responsibilities for OEHI employees and contractors are detailed in OEHI's Safety Handbook and include, but are not limited to, the following:

- Performing every job safely for the benefit of self, coworkers, contractors, subcontractors, visitors, the public, and for the protection of company assets and the environment.
- Immediately reporting job-related injuries, equipment damage, near misses, spills, and fires, regardless of severity, to a supervisor and to the Communication Operations Center (COC).
- Taking necessary actions to P.A.U.S.E. (People Actively Using Stop Work Enforcement), or intervene and correct any unsafe condition, practice, situation, or the unsafe behavior of any person.

- Actively participating in safety meetings, safety training, and pre-job safety tailgate meetings and the safety observation process.

- Becoming familiar with emergency procedures applicable to the job and the OEHI Safety Handbook and other pertinent OEHI safety policies, procedures and guidelines, manuals, handbooks and publications.

OEHI uses a number of management techniques to ensure that employees, managers/supervisors and contractors demonstrate accountability for OEHI HES&S goals.

Contractor Management Program

OEHI's contractor safety management program has been developed to promote a safe working environment for OEHI employees, contractors, subcontractors, visitors and the public. This program establishes the minimum requirements and expectations for contractors and their subcontractors and includes criteria for prequalification, selection, site safety and health orientation, pre-job activities, work in progress, and performance evaluation.

All contractors and service providers must pre-qualify prior to a bid award or performing any onsite task or service. Contractors are selected for the bid process upon completion of the safety and health criteria evaluation and a review of the contractor's ability to comply with OEHI applicable safety and health requirements. The final contractor selection is made based on the contractor's HES&S performance, cost, availability and technical qualifications.

Contractors must prepare a comprehensive health and safety plan before performing and completing any work. Contractors are also required to (1) hold regular safety meetings; (2) conduct Job Safety Analysis to identify and eliminate workplace hazards; (3) have an active Behavioral Based Safety (BBS) Observation program that identifies at-risk behaviors and mentors/coaches employees on safe work practices; (4) report and investigate significant and important incidents; (5) be familiar with OEHI's Emergency Procedures and (6) ensure that new contractor personnel (including both contractor employees and subcontractors) are familiar with OEHI safety practices.

Audits are conducted for selected projects to determine compliance with safety policies and practices and assessment of hazards. All hazards must be mitigated by the contractor or the OEHI facility, as appropriate, and non-compliance issues promptly corrected.

Facility Design and the Management of Process Risks

OEHI Process Risk Management (PRM) program provides the means to identify and increase the awareness of foreseeable processes and operational risks that could potentially lead to an unplanned and unwanted event, and leads to recommendations that would eliminate or mitigate such risks. It provides a framework for continuous improvement in managing HES&S risks and facilitating the integration of HES&S risk management into business planning and decision making processes.

The requirements of the PRM program are designed to ensure a consistent and risk-based methodology for HES&S risk management and to ensure mitigation or discontinuance of participation in any activity that poses an unacceptable HES&S risk. Key elements include: i) compliance with applicable laws and regulations pertaining to HES&S risk management, ii) that facilities and equipment shall be designed, constructed, operated and maintained to meet internal OEHI standards, and iii) that recognized and generally accepted good engineering practices be applied.

In addition to any federal/country, state, and/or local regulatory programs for managing process-related risks, the following OEHI internal requirements are generally applicable.

- Facility Technical Information - Provide complete and accurate technical information to provide a basis for identifying and understanding chemical, technology and equipment related hazards.

- Management of Change - Identify and control HES&S hazards created by proposed changes in personnel, processes, equipment, structures, and procedures.

- Mechanical Integrity & Quality Assurance - Verify critical equipment, piping, components and instrumentation are designed, engineered, procured, fabricated, installed, tested, inspected and maintained according to required design specifications and standards.

- Operating & Maintenance Procedures - Provide clear instruction for safely conducting critical activities, including handling of hazardous materials, permit to work activities, inspection, and maintenance.

- Pre-Startup Safety Reviews - Verify that all new or significantly modified facilities have been thoroughly checked for safety, operability, and maintenance viability prior to startup.

- Process Hazards Reviews - Provide systematic approach for identifying and assessing HES&S Hazards and their possible consequences.

6.1 Natural Hazards

The OEHI CO_2 EOR Project will be planned, engineered, designed, constructed, and operated to meet the requirements of all applicable LORS. An overview of hazards that will be addressed in the OEHI CO_2 EOR Project is provided below.

6.1.1 Seismicity

In the context of CO_2 EOR, it is important as part of site selection to understand the risks of potential CO_2 leakage from the reservoirs due to seismicity. These reservoir risks are generally twofold: the first is induced seismicity from injection activities, and the second is potential leakage risk due to naturally occurring seismic activity. The OEHI CO_2 EOR Project evaluated both of these concerns with respect to the EHOF. The results are presented below.

6.1.1.1 Induced Seismicity

Even with decades of fluid injection for EOR, there is no public record of measurable induced seismicity at Elk Hills. The Elk Hills Unit contains significant volumes of gas in place and has undergone significant water and gas injection operations, including a pilot CO_2 injection project conducted in 2004.

In 2008, a regional seismicity study was conducted for the EHOF. The study found:

> *The risk of induced seismicity due to CO_2 injection operations was remote and highly unlikely (Terralog Technologies, 2008). Furthermore, even in the unlikely case of an induced seismic event, any such seismic event would likely be less than magnitude 4, based on the geologic setting, areal extent and depth of proposed operations, and anticipated pressure and stress changes (Terralog Technologies, 2008). Seismic events on the order of magnitude 3 to 4 may be felt within the immediate area (approximately 1 km), but would not be expected to cause structural damage to facilities or buildings for several reasons. Most surface structures near the EHOF are likely to be at distances of about 6 to 30 miles (10 km to 50 km) from the epicenter of any induced seismic event. Assuming the highly unlikely scenario of an induced seismicity event of magnitude 4 located at a depth of about 6 miles (10 km), the induced horizontal ground acceleration would be on the order of 0.01 g, which is an order of magnitude lower than the California seismic codes. Seismic codes in California require structures to withstand horizontal acceleration in excess of 0.1 g, with varying strength depending on the seismic zone location and the use of the structure. Therefore, even with the assumption of an induced seismic*

event, there is minimal risk that any damage would result to surface structures. This induced seismicity of this magnitude also would not cause any damage to injection equipment or the reservoirs, as detailed in the following section. (HECA, 2009).

6.1.1.2 Naturally Occurring Seismicity

Since 1990, there have been 129 naturally occurring earthquakes recorded with a magnitude greater than 3.0 within a 60-mile (100 km) radius of Elk Hills (Figure 6-1). The vast majority of these have occurred along the White-Wolf fault, approximately 30 miles southeast of Elk Hills (Southern California Earthquake Data Center web site). The EHOF is situated about 15 miles east of the San Andreas Fault.

Natural seismicity of magnitude 3 to 6 is not likely to impact field operations and is highly unlikely to lead to leakage of any injected CO_2 from the EHOF. This assessment is based on decades of historical data for earthquake effects on wells in oil and gas operations in Southern California. It is also based on the geological setting of the injection project, which is in relatively soft and shallow (approximately 6,000 feet below ground surface) sediments. Most major earthquakes with a magnitude 6 and above in California occur at depths of 6 miles or more in brittle basement rock, while the proposed injection reservoirs at Elk Hills Unit is less than 2 miles deep in relatively soft sandstone. The strength of seismic waves decreases with distance; therefore, the large separation between major earthquake source and injection reservoirs would help prevent well damage (W. Foxall and J. Friedmann, 2008).

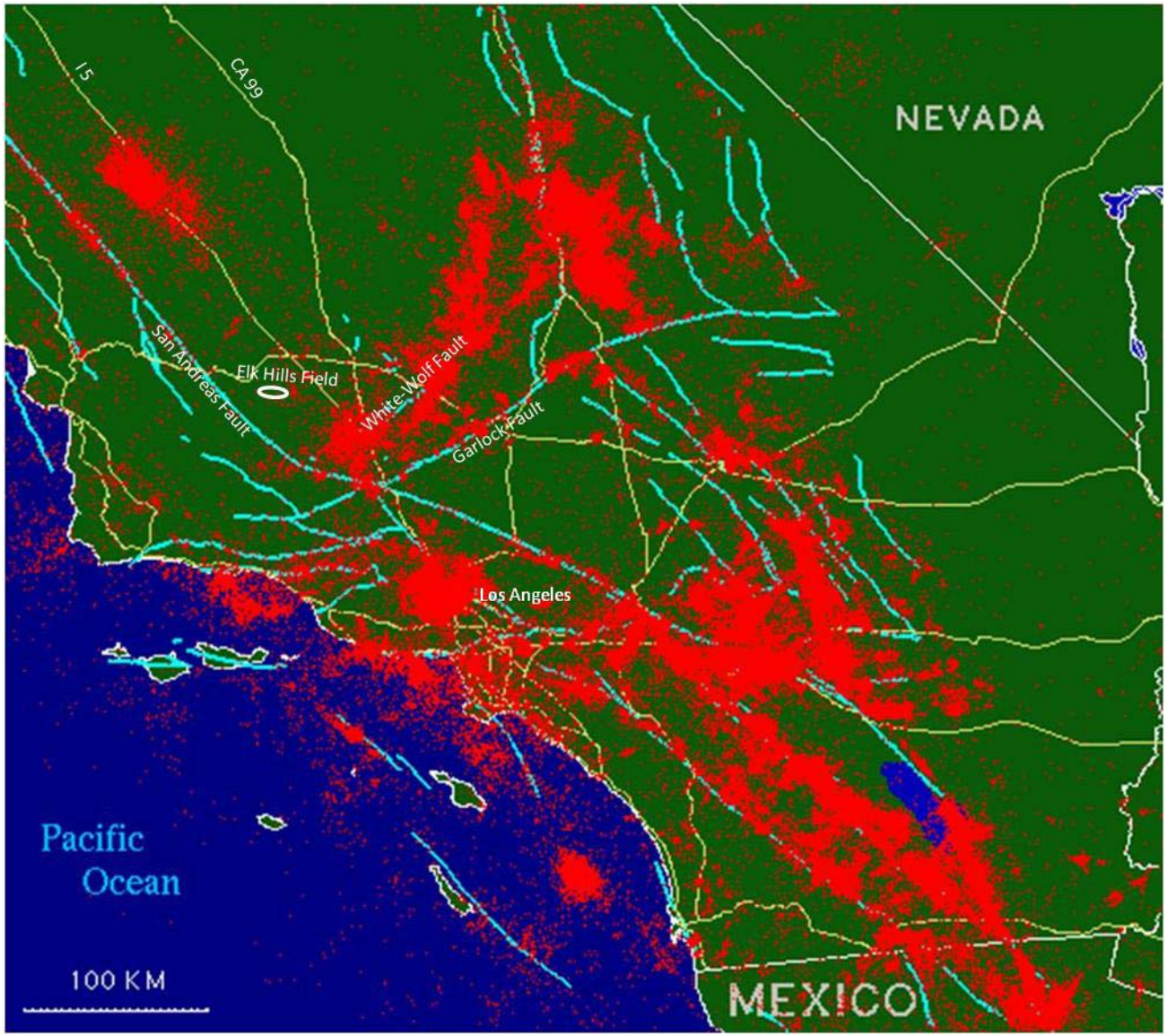

FIGURE 6-1 SEISMIC EVENTS IN SOUTHERN CALIFORNIA FROM 1932 TO 1996 (SOUTHERN CALIFORNIA EARTHQUAKE DATA CENTER)

In summary, the risk of induced seismicity from CO_2 EOR and Sequestration is remote. Moreover, even in the unlikely event of induced seismicity, the predicted magnitude would be no greater than 4.0. This type of event (4.0 magnitude) is comparable to the existing natural seismicity in the EHOF area and, as discussed above, would not cause structural damage to surface facilities in the nearby area. With respect to natural seismic events, there is abundant historical data and information demonstrating that a rather significant seismic event (on the order of magnitude 6), even if located in the immediate area of the EHOF, should not cause significant damage to wells or lead to leakage of injected CO_2. Finally, due to the numerous shale-sealed formations above the target injection zone, any vertical gas migration that might occur from the injection interval would be contained and not reach the surface.

6.1.2 Floods

The OEHI CO_2 EOR Project is not located within an area identified as having flood hazards or shallow groundwater. Based on the Federal Emergency Management Agency Flood Insurance Rate Map "Kern County, California, and Incorporated Areas" (Map 06029C2225E), dated 2008, the OEHI CO_2 EOR Project is not in the 100-year flood zone. Provided proper drainage design, the OEHI CO_2 EOR Project is not likely to experience flooding.

6.1.3 Wind Loads

The basic design wind speed (3 second gust) is 85 miles per hour as per CBC 2007. Wind loads on structures, systems, and components will be determined from ASCE 7 05 and CBC 2007.

6.2 Emergency Systems and Safety Precautions

6.2.1 Community and Stakeholder Awareness

OEHI values the importance of community awareness in the Kern County area and will engage in dialogue with the community and various stakeholders to maintain public confidence in the integrity of the OEHI CO_2 EOR Project.

Community/Stakeholder issues will be identified through the CEC siting process for the HECA Project by listening and consulting with concerned stakeholders: employees, contractors, regulatory agencies, public organizations, and communities. All communications will be responded to in a timely manner.

6.2.2 Emergency Preparedness

The OEHI CO_2 EOR Project will develop and use communications and response plans for emergency situations in accordance with applicable LORS. Prior to any activity, the response plan will be reviewed by the appropriate manager, who will take necessary actions to prepare to respond to an emergency event. All plans will be coordinated with the local emergency response organizations within Kern County, and the Bakersfield area in particular. Area hospitals and clinical medical services have been identified along with fire protection.

6.2.3 Specific Project Emergency Systems

The OEHI CO_2 EOR Project's auxiliary systems described below support, protect, and control the Project.

Fire Protection

See Section 3.4, Fire Protection, for details on the fire protection system for the OEHI CO_2 EOR Project.

Lighting System

The lighting system provides plant personnel with illumination in both normal and emergency conditions. The system consists primarily of alternating current (AC) lighting, and includes direct current (DC) lighting for activities or emergency egress required during an outage of the OEHI CO_2 EOR Project's AC electrical system. Lighting fixtures will be directionally oriented, shielded, and hooded to minimize offsite migration of light. The electrical distribution system also provides AC convenience outlets for portable lamps and tools.

Grounding System

The OEHI CO_2 EOR Project's electrical systems and equipment are susceptible to ground faults, switching surges, and lightning, which can impose hazardous voltage and current on Project equipment and structures. To protect against personnel injury and equipment damage, the grounding system provides an adequate path to dissipate hazardous voltage and current under the most severe conditions. Bare conductor is installed below grade in a grid pattern, and each junction of the grid is bonded together by welding or mechanical clamps. The grid spacing is designed to maintain safe voltage gradients. Ground resistivity readings are used to determine the necessary grid spacing and numbers of ground rods. Steel structures and non-energized parts of Project electrical equipment are connected to the grounding grid.

Emergency Relief System

The OEHI CO_2 EOR Project is furnished with pressure relief devices to protect equipment from overpressure. At the satellite units, any releases from pressure relief devices are routed through a local tank to capture any liquids entrained in the release. Gases including CO_2 and produced hydrocarbons would be vented directly to atmosphere in this emergency situation. At the CO_2 Facility, any excess gas resulting from a pressure relief would be routed to a flare relief system designed to handle an emergency or upset condition.

Cathodic and Lightning Protection System

Cathodic protection may be utilized using an impressed current or buried anode system to prevent corrosion of buried carbon steel piping and structures. Protective coatings are applied as primary protection and to minimize cathodic protection current requirements. The requirement for a cathodic protection system will be determined during detailed design. Lightning protection will be furnished for buildings and structures as appropriate.

Instrument Air System

The instrument air system provides dry, filtered air to pneumatic operators and devices throughout the OEHI CO_2 EOR Project. Air from the service air system is dried, filtered, and pressure-regulated prior to delivery to the instrument air piping network. This supports continual safe operation of the instruments controlling Project operation. The instrument air system will include two compressors each with the capacity for 100 percent of operating needs.

Emergency Response Procedures

Prior to commencement of construction activities, all requisite parties, i.e., the contractor, project management, and OEHI's assigned operations and management staff, will meet and develop a site-specific construction emergency response program. A review of the developed programs with local government emergency response organizations will ensure completeness and proper coordination.

6.3 Technology Selection and Facility Reliability

6.3.1 Technology Selection

EOR technologies have been utilized at the Elk Hills Unit for many years and such technologies have been widely used in the oil and gas (O&G) industry for even longer. CO_2 EOR has been employed for almost 40 years at Permian basin fields owned by

Occidental. The proposed technologies for the OEHI CO_2 EOR Project have been demonstrated effective and reliable for similar EOR projects at Elk Hills Unit and within the O&G industry.

The OEHI CO_2 EOR Project utilizes common technologies for the injection, production, separation and gas processing associated with the process fluids (oil, water, CO_2, hydrocarbon gas, etc). In comparison with the complex chemical reactions and associated equipment found at a refinery or chemical plant, the processes and technology options for the OEHI CO_2 EOR Project are relatively limited. The composition, flow rates and pressures of the produced fluids and gas streams determine the type, size and configuration of process equipment selected. Potential design options for certain equipment will also be limited by applicable LORS, such as those pertaining to protection of air quality and process safety. Material selection is important due to the process conditions, for instance the corrosive nature of CO_2 when free water is present (sometimes also called wet CO_2) and requires mitigation and design attention.

Production systems at the satellites and CTB will consist of separators and tanks to separate the gas vapor (i.e. CO_2, hydrocarbon gas, nitrogen mixture) from the liquid (oil and water). The gas vapors evolve out of the liquids and rise to the top of these processes because they are less dense while the liquids are heavier and removed separately. Tanks are used to separate the oil from the water because oil will float to the top of water and can be skimmed off. The gas from the separators and tanks are gathered via vapor recovery units and compressors, preventing release of gases to the atmosphere during normal operations. These are the conventional proven technologies in the O&G industry for both EOR and non-EOR projects.

Recovered gas is sent to the RCF and/or CRP from the satellites and the CTB for further gas handling. Gas gathering manifolds on the front end of the gas handling processes will permit sending lower CO_2 content to the CRP and the higher CO_2 content gas to the RCF by using valves to divert gas from the incoming satellites to the two different trains, as required. The RCF and CRP use demonstrated and commonly used technologies for gas handling and processing for EOR projects that are efficient, effective and reliable in the O&G industry. The RCF train consists of dehydration and compression. The dehydration system removes the free water so that the gas is non-corrosive and then the compressors boost the pressure of the process gas so that it can be reinjected into the injection wells.

The CRP is designed to remove the NGL's and hydrocarbon gas for sales. The concentrated CO_2 stream is reinjected into the injection wells. The CRP consists primarily of a demethanizer, Selexol process and NRU to separate the components in the gas stream. These are common, proven technologies to separate the components in the gas stream. The demethanizer chills the CO_2 so that much of it condenses as a

liquid and is pumped back to the field for reinjection. The gas that doesn't condense goes to the Selexol process where CO_2 is further removed. The nitrogen and hydrocarbon mixture goes to the NRU so that it can be separated in order to meet natural gas pipeline specifications. Some of the sub-processes to achieve desired results are a dehydration system to remove the water from the gas, compression to boost the gas to the desired pressure before entering the demethanizer, propane refrigeration system to achieve the cooling of the gases to condense NGLs and CO_2 at desired temperatures, pumps to move the fluids, and heat exchangers to cool the process gases after they have been compressed. Even though the processes that are being utilized are reliable and common technologies, further design optimization will be undertaken in the FEED and detailed engineering of the project

The OEHI EOR CO_2 Project will use appropriate materials for the respective process conditions that exist throughout the project. Detailed material selection specifications and drawings will be developed during the FEED and detailed engineering of the project. Pipelines that are buried underground will have external coatings to protect the pipe from water and external corrosion. Process streams that contain CO_2 or mixtures of hydrocarbon gas and CO_2 without free water will be transported through carbon steel plant piping and pipelines because the CO_2 is non-corrosive when there is no free water present. The dehydration systems that were previously discussed remove the free water from these process streams. For piping systems that contain free water and that could have a corrosive environment, material selections will consist of internally plastic coated carbon steel pipe, poly-lined carbon steel pipe, or stainless steel pipe. These material selections are common in other EOR projects and have been proven to mitigate corrosion. Process equipment like separators, pumps, tanks, compressors, etc will either be IPC, stainless steel or fiberglass/epoxy composites for corrosion protection, as appropriate. Some of the process systems that will have free water present are as follows

- Producing well flowlines
- Satellite separators and piping
- Gas gathering lines from the satellites to the CRP and RCF
- Liquid gathering lines from the satellites to the CTB
- CTB equipment
- RCF and CRP piping and systems prior to the dehydration systems
- Water injection pumps and piping
- Injection well tubing

Much of the gas processing equipment and piping will be in non-corrosive service for which carbon steel is appropriate. Portions of the demethanizer and NRU unit operations will be stainless steel or low-temperature carbon steels because of some of the expected low-process temperatures.

6.3.2 Facility Reliability

As mentioned above, processes and materials that are common to CO_2 EOR projects in the O&G industry are being utilized, as appropriate, for the facilities and pipelines of the OEHI CO_2 EOR Project. Operating and maintenance practices will follow industry requirements. Automation and control systems, as previously described, will enhance operational control and ensure the safety and reliability of the facilities. Maintenance programs and mechanical integrity practices will be developed and followed to contribute to the reliability of the facilities. Reliability and availability studies, equipment and spare part philosophy and process hazards analysis will be performed in FEED and detailed engineering stages to identify other options to maintain reliability of the facilities. These items will contribute significantly to the reliability of the facilities and pipelines.

7 Compatibility with Laws, Ordinances, Regulations and Standards

There are many LORS that impact operations at the Elk Hills Unit, most notable are the DOGGR permitting process and the CEC process. There are numerous other LORS and/or permits to which project activities are subject. Some of these permits or agency reviews will certainly be required and others of them may become applicable pending final decisions on location or site specific activities.

7.1 Division of Oil, Gas and Geothermal Resources

The OEHI EOR CO_2 Project plans to construct and operate CO_2 Class II injection wells to enhance oil recovery within the Elk Hills Unit. Permitting of injection wells associated with EOR operations is well established and regulated by the DOGGR under authority granted through EPA's existing UIC Class II regulations. Under California law, DOGGR has responsibility for permitting injection and extraction wells and associated well facilities, including those anticipated for the OEHI CO_2 EOR Project. DOGGR has been given primacy to permit Class II injection wells in the State of California under the UIC program pursuant to Section 1425 of the Federal Safe Drinking Water Act, 42 U.S.C. § 300h-4 (see 48 Fed. Reg. 6336 [Feb. 11, 1983]). The wells and associated well facilities will be permitted pursuant to authority provided to DOGGR in the Public Resources Code and in accordance with applicable DOGGR regulations (see generally Cal. Pub. Res. Code Division 3, Chapter 1 and 14 Cal. Code Regs. Division 2). DOGGR has statutory responsibility under Division 3 of the Public Resources Code to regulate all oilfield operations in the State of California.

The Tulare Aquifer, underlying the Elk Hills Unit, is defined as a producing unit in the California Oil and Gas Fields (Vol 1). In 2004, DOGGR granted permit #22800022, allowing injection of disposal water into this reservoir. As part of the OEHI EOR CO_2 Project, applications will be submitted and approvals sought from DOGGR for additional water and CO_2 injection in various locations of the Elk Hills Unit.

7.2 Biological Resources

Numerous biological resources occur within and around the Elk Hills Unit. Some of these resources are protected and/or identified as threatened or endangered by state and federal laws and regulations. OEHI has worked closely with the resource agencies having jurisdiction over protected species since ownership of the Elk Hills Unit was transferred to OEHI in 1998.

7.2.1 Endangered Species Act of 1973

Through federal action and by encouraging the establishment of state programs, the 1973 Endangered Species Act (ESA) provided for the conservation of ecosystems upon which threatened and endangered species of fish, wildlife, and plants depend.

Section 7 of the ESA requires federal agencies to ensure that any action authorized, funded or carried out by them is not likely to jeopardize the continued existence of listed species or modify their critical habitat. Prior to the transfer of the Elk Hills Unit to OEHI, DOE's oil production activities complied with the ESA via a series of formal Section 7 Consultations with the United States Fish and Wildlife Service (USFWS), which resulted in the issuance of several Biological Opinions (BOs).[3] The BOs included authorization for take of listed species that is incidental to an otherwise lawful act. This is called an Incidental Take Statement. The most recent BO and associated Incidental Take Statement were issued in 1995, which allowed for the maximum efficient rate (MER) of oil recovery and authorized the incidental take of several listed species.

When Congress directed DOE to sell NPR-1 (National Petroleum Reserve – 1), they were also directed and authorized to transfer the Incidental Take Statement ("permit") to the purchaser of NPR-1 and provided that the transferred permit "shall cover the identical activities, and shall be subject to the same terms and conditions as apply to the permit at the time of transfer."[4] This provision was interpreted by the U.S. Department of the Interior to mean that the 1995 BO and accompanying Incidental Take Statement were to be transferred to the purchaser of NPR-1. OEHI completed the purchase of NPR-1 in February 1998, and has since been operating the Elk Hills Unit consistent with the BO and associated Incidental Take Statement.

7.2.2 California Endangered Species Act

The California Endangered Species Act (CESA) states that all native species of fishes, amphibians, reptiles, birds, mammals, invertebrates, and plants, and their habitats, threatened with extinction and those experiencing a significant decline which, if not halted, would lead to a threatened or endangered designation, will be protected or preserved. CESA is under the jurisdiction of the California Department of Fish and Game (CDFG) and they have been directed to work with all interested persons, agencies and organizations to protect and preserve such sensitive resources and their

[3] USFWS. 1995. Reinitiation of Formal Consultation Concerning Oil Production at Maximum Efficient Rate on Elk Hills Naval Petroleum Reserve, Kern County, California
[4] 3413(d) of National Defense Authorization Act for Fiscal Year 1996

habitats. Similar to the federal ESA, CESA also allows for take incidental to otherwise lawful development projects under Section 2081(b).[5]

To comply with CESA, OEHI has also operated under the terms of a 1997 Memorandum of Understanding[6] (MOU) with CDFG that was subsequently amended to extend its term to 2009. OEHI has been working with CDFG to amend and extend the MOU for an additional period and anticipates executing the amendment soon. The MOU incorporated by reference the 1995 BO and all of its requirements as part of the agreement. The MOU included several additional measures that relate to species with State of California protection. OEHI continues to operate in compliance with the MOU.

7.2.3 Habitat Conservation Plan

Both the BO and the MOU anticipated the possible sale of the Elk Hills Unit by the federal government and the subsequent need for issuance to the new, non-federal owner of a section 10(a)(1)(B) permit under the ESA (and a section 2081(b) permit under CESA). Limits related to habitat disturbance in the BO were based on a series of assumptions of productivity and extraction rates, which were based on DOE's history of oil extraction activities at the site. OEHI has been working with the USFWS to accommodate continued operation beyond habitat disturbance limits set by the BO originally issued to the DOE in 1995 and to obtain incidental take authorization through the ESA Section 10 process and the CESA Section 2081(b) process, both of which require the development and submittal to the USFWS and CDFG of a Habitat Conservation Plan (HCP). A draft HCP has been submitted to both the USFWS and CDFG for review; however, the HCP process is often long (5 to 15 years) and until such time that the HCP is reviewed and approved by the agencies, OEHI continues operation of the Elk Hills Unit in accordance with the conservation measures and mitigation requirements set forth on the 1995 BO and 1997 MOU.

The draft HCP covers all of the approximately 47,884 acre (74.8 square miles) Elk Hills Unit (the area covered by the BO is 47,409 acres, the difference being the more than 475 acres that were purchased as future mitigation land after the original Purchase Sale Agreement with the DOE), as well as selected rights of way within a 2-mile conservation buffer around the Elk Hills Unit.

7.2.4 Covered Species

The 1995 BO and Incidental Take Statement authorized take of the following species: San Joaquin kit fox (Vulpes macrotis mutica), blunt-nosed leopard lizard (Gambelia sila), the giant kangaroo rat (Dipodomys ingens), and Tipton's kangaroo rat

[5] California Fish and Game Code Section 2080-2081 Consistency Determinations
[6] CDFG. 1997. California Endangered Species Act Memorandum of Understanding and Take Authorization for Occidental of Elk Hills; December.

(Dipodomys nitratoides nitratoides). Measures were also incorporated to minimize adverse effects on several plant species, including the Hoover's woolly-star (Eriastrum hooveri), which has been delisted under the ESA, Oil nest straw (Stylocline citroleum), Kern mallow (Eremalche kernensis; no subspecies designation) and San Joaquin woolly threads (Monolopia congdoni).

The MOU applies to and authorizes take for all of the species covered by the USFWS BO (although no direct take of blunt-nose leopard lizard is authorized by the MOU), as well as species not listed under the ESA, but having California State protection including: western burrowing owl (Athene cunicularia hypugea), San Joaquin antelope squirrel (Ammospermophilus nelsoni), and also San Joaquin wooly-threads (Lembertia congdonii).

7.2.5 OEHI Operations and Species Affects

OEHI has operated since 1998 under the MOU (as amended) and the USFWS BO, adhering to all of the requirements contained therein. These agreements apply to all ground-disturbing activities (both temporary and permanent) within the Elk Hills Unit. Typical ground-disturbing activities include: oil production, extraction, development and transport, access road construction, pipeline, utility and service line excavation and construction, associated oil production facility construction, etc. The BO contains conservation and mitigation measures that include pre-construction surveys, species and habitat monitoring requirements, post-construction conservation measures and assigns values to habitats impacted as a result of ground disturbance. All of these measures are intended to avoid and minimize potential effects to listed species and their habitat and to provide compensation for those effects that are unavoidable (i.e. habitat removal due to construction).

Habitat values are determined by the degree of disturbance that exists within each section of land. High or Red Zone has < 10 percent disturbance, Medium or Green Zone has 11 – 25 percent disturbance, and low or White Zone has > 25 percent disturbance. The Elk Hills HCP that is in draft form also sets habitat values for lands within the Elk Hills Unit as Low, Moderate and High Relative Value Lands. The majority of the lands that fall within the Elk Hills Unit boundaries (~47,000 acres) are considered moderate value (~74 percent), followed by high-value lands (~24 percent) with a very small area of low-value lands (2 percent). The base mitigation ratio is 3:1 (acquired land: impacted land). If the acquired land is of higher value than the affected land, the ratio could be lowered to 2:1.

Since ownership was transferred to OEHI in 1998, no direct or indirect take of any covered species has occurred as a result of project construction and/or operation. Additionally, as required in the BO and reiterated in the MOU, 7,075 acres were to be acquired as Habitat Management lands on or adjacent to the Elk Hills site. This

acreage has been acquired by OEHI and is ready for placement in a conservation easement for management as species' habitat in perpetuity. The conservation easement for these lands is currently under review by CDFG. Once the conservation easement is approved, it will be recorded with Kern County, encumbering the surface title to the lands, thereby ensuring they are always maintained as Habitat Management Lands.

In anticipation of ongoing operation, OEHI has continued to acquire mitigation lands to offset future ground-disturbing activities within the Elk Hills Unit. OEHI has acquired significant additional acres that will be used as mitigation for future impacts. Activities associated with EOR are part of the ongoing activities covered by the BO and MOU and, thus, would be handled in accordance with requirements of those agreements. All preconstruction surveys, species monitoring, post-construction requirements and mitigation assignments on Habitat Management lands for ground disturbance will be included as part of the EOR activities proposed at the Elk Hills Unit.

7.3 Permits and Approvals

There are several other approvals which may be required for activities related to EOR in Elk Hills. The following sections contain brief summaries of each.

7.3.1 Clean Water Act Section 404 Permit

The U.S. Army Corps of Engineers (USACE) has jurisdiction over wetlands and waters of the U.S. Construction of access roads to new or existing oil wells, pipeline construction or associated EOR facilities is not likely to affect aquatic features under USACE jurisdiction. Efforts to avoid or minimize potential effects to these jurisdictional features will be made, but in the event avoidance is not feasible, OEHI will secure a Clean Water Act (CWA) Section 404 permit for fill of wetlands and waters of the U.S. from USACE.

7.3.2 CWA Section 401 Water Quality Certification and Waste Discharge Requirements

The State Water Resources Control Board (SWRCB) has jurisdiction over waters of the State of California and has been delegated authority for issuance of CWA Section 401 Water Quality Certifications from the EPA. That authority to issue 401 Water Quality Certifications has been delegated to the Regional Water Quality Control Board (RWQCB). Construction of access roads to new or existing oil wells, pipeline construction or associated EOR facilities could potentially affect aquatic features under RWQCB jurisdiction. Efforts to avoid or minimize potential effects to these

jurisdictional features will be made, but in the event avoidance is not feasible, OEHI will secure a Section 401 Water Quality Certification (or waiver) from the RWQCB.

7.3.3 San Joaquin Valley Air Pollution Control District

The San Joaquin Valley Air Pollution Control District (SJVAPCD) implements several regulations that apply to both construction and operation of OEHI. Regulation VIII Fugitive Dust Rules apply to all construction activities. Standards for the control of visible emissions will be required during all construction and drilling phases of the OEHI EOR CO_2 Project. Portable Equipment Registration for certain portable emissions units would be required for well drilling, service or workover rigs, pumps, compressors, generators and field flares. Any new air emitting equipment that would be installed as part of the OEHI CO_2 EOR Project would be subject to SJVAPCD Regulation II

7.3.4 Groundwater and Water Quality

Well-drilling activities would need to comply with all requirements established by the RWQCB, including Title 27 California Code of Regulations (CCR), Section 20090(g), or Waiver Resolution No. R5-2008-0182. All downhole well operations would be conducted in a manner that protects groundwater in accordance with Title 14 CCR Division 2, Chapter 4, Subchapter 1. As previously mentioned, the OEHI CO_2 EOR Project is not located within an area identified as having shallow groundwater.

The SWRCB recently adopted a new Construction General Permit, Order 99-08-DWQ in July 2009. The General Construction Permit has requirements for preventing untreated runoff from entering waterways. The Construction General Permit requires monitoring of stormwater runoff and measures to prevent sedimentation, turbidity and pollution from impacting receiving waters. All excavation and construction activities would be required to comply with the Construction General Permit requirements which may require preparation of a SWPPP and ongoing project stormwater monitoring.

The SWRCB also has an Industrial General Permit, Order 97-03-DWQ. This statewide permit is applicable to only certain types of operations. The Statewide Industrial General Permit applies to current operations at Elk Hills Unit and will apply to the OEHI CO_2 EOR Project.

Stormwater is managed, not only at the statewide level, but also at the local level. Compliance with all local stormwater requirements would also be required.

The agencies listed in Table 7-1 below are expected to use this document in their decisionmaking process. Table 7-1 also lists permits and approvals that will be

required to implement the OEHI CO_2 EOR Project, and a list of related environmental review and consultation requirements imposed by federal, state, or local laws, regulations, or policies.

TABLE 7-1 LISTING OF APPLICABLE AGENCIES

Agency	Permits/Approvals	Environmental Review/Consultation Requirements
Department of Conservation, Division of Oil, Gas and Geothermal Resources (DOGGR)	• Application for permits to drill	• Responsible agency • Consulted during process • Reviews Draft Environmental Impact Report (EIR)
San Joaquin Valley Air Pollution Control District (SJVAPCD)	• SJVAPCD Regulation VIII Fugitive Dust Rules • Mobile Equipment Permits (drill rigs, flares, etc.) • Stationary source permitting requirements for equipment requiring a permit to construct/operate	• Responsible agency • Consulted during process • Reviews Draft EIR
California Regional Water Quality Control Board (RWQCB)	Waste Discharge Requirements/ Waiver (if necessary), Section 401 Water Quality Certification (if necessary)	• Responsible agency • Consulted during process • Reviews Draft EIR
California Department of Fish and Game (CDFG)	CESA 2081(b) take permitting, Section 1600 Lake or Streambed Alteration Agreement(s) (SAA) for impacts to waterways or lakes (OEHI has a long-term SAA that expires in 2020).	• Responsible agency/Trustee agency • Reviews Draft EIR

Agency	Permits/Approvals	Environmental Review/Consultation Requirements
U.S. Fish and Wildlife Service (USFWS)	ESA Incidental Take Authorization (via approval of an HCP or individual Section 7 Consultation)	• Reviewing agency
U.S. Army Corps of Engineers (USACE)	Section 404 Clean Water Act permitting for impacts to wetlands or waters of the U.S.	• Reviewing agency • Permit issuance if access roads, facility or other construction activities impacted jurisdictional aquatic resources
State Water Resources Control Board	General Construction Permit, Order 99-08-DWQ General Industrial Permit	• Reviewing Agency • Permit issuance
Kern County	Building permits, grading permits (although well drilling is exempt from grading permits in Kern County, roadway and facility construction may require Kern County grading permits), National Pollutant Discharge Elimination System (NPDES)/County stormwater compliance and other ministerial type permits	• Reviewing agency • Consulted during process • Reviews Draft EIR
The Department of Toxic Substances Control (DTSC)	Issues Hazardous Waste Facility Permits required by Health and Safety Code, section 25200	• Reviewing Agency • Issues Hazardous Waste Permits

8 Alternatives

To implement the policy of reducing significant environmental impacts, CEQA requires that an EIR identify both feasible mitigation measures and feasible alternatives that could avoid or substantially lessen the OEHI CO_2 EOR Project's significant environmental effects (Pub Res C §§21002, 21002.1(a), 21100(b)(4), 21150). Additionally, an EIR must describe a reasonable range of alternatives to the proposed project, or to its location, that would feasibly attain most of the Project's basic objectives while reducing or avoiding any of its significant effects.

There are four threshold tests for suitable alternatives. Potential alternatives are reviewed to determine whether they:

- Can substantially reduce significant environmental impacts;
- Can attain most of the basic project objectives;
- Are potentially feasible; and
- Are reasonable and realistic.

Alternatives to the proposed project that did not satisfy all four criteria were excluded from analysis in accordance with CEQA Guidelines (14 CCR §15126.6(c)). Two Alternatives scenarios that will be carried forward for analysis are listed below – the mandatory No Project analysis and an analysis of alternate pipeline routes and Rights of Way (ROW). In addition, it is important to note that other viable alternatives may be identified later during the public scoping process and subsequently carried forward for analysis.

No Project Alternative

According to CEQA, an EIR's discussion of alternatives to the project must include a "No Project" alternative, along with an analysis of the impacts of that alternative. The purpose of a discussion of the No Project alternative is to allow a comparison of the environmental impacts of approving the proposed project with the effects of not approving it (14 CCR §15126.6(e)(1)). The No Project Alternative will consider the continued operation of the Elk Hills Unit under OEHI's current operational policies and plans for the foreseeable future.

Alternate Pipeline and ROW Routes to Facilitate Project

This alternative will analyze different pipeline routes and ROW access routes to project-related equipment such as the Satellite Gathering Stations or the Reinjection

Compression Facility. The intent of this analysis is to ascertain if alternate routes for pipelines or ROW can lessen potential ground disturbance impacts that would occur if the proposed project were implemented.

9 References

C&C Resources, 2000. Geologic database, http://www.ccreservoirs.com.

California Oil and Gas Fields, 1998, 1992, and 1982. California Department of Conservation, Division of Oil, Gas, and Geothermal Resources (DOGGR), Volumes I, II and III. 1,472 pp. EHOF information is on pp. 168 173.

Callaway, D.C., and E.W. Rennie Jr., 1991. San Joaquin Basin, California: In H.J. Gluskofer, D.D. Rice, and R.B. Taylor (eds.) Economic Geology, U.S.: The geology of North America: The Geological Society of North America Vol. P-2, p. 417 430.

DOE-NETL (Department of Energy-National Energy Technology Laboratory), 2008. Storing CO_2 with Enhanced Oil Recovery. DOE/NETL-402/1312/02 07 08. 55p.

DOGGR (California Division of Oil, Gas and Geothermal Resources), 2007. 2006 Annual Report of the State Oil & Gas Supervisor; Sacramento: California Department of Conservation, 270 p.

Fiore, P. E., D. D. Pollard, W. R. Currin and D. M. Miner, 2007. Mechanical and stratigraphic constraints on the evolution of faulting at Elk Hills, California, AAPG Bulletin, v. 91, no. 3, p. 321 341.

Foxall, W., and S.J. Friedmann, 2008. Frequently asked questions about carbon sequestration and earthquakes. Lawrence Livermore National Laboratory, Doc No. LLNL-BR-408445. 3 pp.

Hydrogen Energy California (HECA), 2009. Revised AFC Volume I, 08-AFC-8. Prepared for the California Energy Commission (CEC). August, 2009.

IPCC, 2005: Special Report on Carbon Dioxide Capture and Storage. Prepared by Working Group III of the Intergovernmental Panel on Climate Change [Metz, B., O. Davidson, H.C. de Coninick, M. Loos, and L.A. Meyer (eds)]. Cambridge University Press, Cambridge, UK and New York, NY, USA 442 pp.

MacAllister, D.J., 1989. Evaluation of CO_2 flood performance: North Coles Levee CO_2 Pilot, Kern County, California, SPE 15499, JPT, February 1989, pg 185.

Merchant, D., 2006. Geologic Storage Options for CO_2 Sequestration of Carbon Dioxide, Elk Hills Field, CO_2 Tertiary Evaluation. HEI Internal Report 56 pp.

McJannet, G.S., 1996. General overview of the Elk Hills Field: Proceedings SPE Western Regional Meeting, Anchorage Alaska, May SPE 35670, 10p.

Nicholson, G. E., 1990. Structural overview of Elk Hills in Kuespert, J. G. and S. A. Reid, Structure, Stratigraphy and Hydrocarbon Occurrences of the San Joaquin Basin, California, Pacific Section SEPM and AAPG, p. 133 140.

Reid, S.A., 1990. Trapping characteristics of upper Miocene turbidite deposits, Elk Hills Field, Kern County, California: In J.G. Kuespert, and S.A. Reid (eds.), Structure, stratigraphy and hydrocarbon occurrences of the San Joaquin Basin: California, Pacific Section, SEPM & AAPG Guidebook No. 65, p. 141 156.

Southern California Earthquake Data Center, Website, http://www.data.scec.org/

Terralog Technologies USA, Inc., 2008. Potential for Induced Seismicity From CO_2 Injection Operations at Elk Hills, HEI Internal Report. 30 pp.

U.S. Department of Energy, Website, http://www.fossil.energy.gov/programs/reserves/npr/index.html.

Zumberger, J. E., J. A. Russell and S. A Reid, 2005, Charging of Elk Hills reservoirs as determined by oil geochemistry, AAPG Bulletin, v. 89, no. 10, p. 1347 1371.

List of Acronyms

AC	alternating current
ACEC	Area of Critical Environmental Concern
AFFF	Aqueous Fire Fighting Foam
BBO	Billion Barrels of Oil
BBS	Behavioral Based Safety
BLM	Bureau of Land Management
BMP	Best Management Practices
BO	Biological Opinion
BOPD	Barrels of Oil Per Day
BWPD	Barrels of Water Per Day
CCF	Central Control Facility
CCR	California Code of Regulations
CCS	Carbon Capture and Sequestration
CDFG	California Department of Fish and Game
CEC	California Energy Commission
CESA	California Endangered Species Act
CEQA	California Environmental Quality Act
CLEP	Coles Levee Ecological Preserve
CNLM	Center for Natural Lands Management
CO_2	Carbon Dioxide
COC	Communications Operations Center
CRP	CO_2 Recovery Plant
CS	Carbon Steel
CSA	Canadian Standards Association
CTB	Central Tank Battery
CWA	Clean Water Act
DC	Direct Current
De-C1	Demethanizer
DEPG	Dimethyl Ethers of Polyethylene Glycol
DOE	Department of Energy
DOGGR	California Division of Oil, Gas, and Geothermal Resources
EHOF	Elk Hills Oil Field
EIR	Environmental Impact Report
EOR	Enhanced Oil Recovery
EPA	U.S. Environmental Protection Agency
ESA	Endangered Species Act

List of Acronyms *(continued)*

FEED	Front End Engineering Design
FM	Factory Mutual Research Corporation
GS	Geologic Sequestration
H2S	Hydrogen Sulfide
HCP	Habitat Conservation Plan
HECA	Hydrogen Energy California
HES	Health, Environment, and Safety
HES&S	Health, Environment, Safety and Security
HESMS	Health, Environment, and Safety Management System
HMI	Human Machine Interface
ICSS	Integrated Control and Safety System
IEEE	Institute of Electrical and Electronic Engineers
IGCC	Integrated Gasification Combined Cycle
IPCC	Intergovernmental Panel on Climate Change
ISA	Instrument Society of America
Km	kilometer
kV	kilovolt
LORS	Laws, Ordinances, Regulations, and Standards
MCFD	Thousands of Cubic Feet Per Day
mD	millidarcy
MDB&M	Mount Diablo Baseline and Meridian
MER	Maximum Efficient Rate
MMSCFD	Millions of Standard Cubic Feet Per Day
MMV	Monitoring, Measurement, and Verification
MOU	Memorandum of Understanding
MSDS	Material Safety Data Sheet
Msl	mean sea level
MW	Megawatt
NETL	National Energy Technology Laboratory
NGL	Natural Gas Liquids
NPDES	National Pollutant Discharge Elimination System
NPR	National Petroleum Reserve
NRU	Nitrogen Rejection Unit
NWS	North West Stevens
OEHI	Occidental of Elk Hills, Inc.
O&G	Oil and Gas

List of Acronyms *(continued)*

OOG	Occidental Oil and Gas Corporation
PG&E	Pacific Gas and Electric
PPE	Personal Protective Equipment
PPM	Parts Per Million
PRM	Process Risk Management
PSIG	Pounds Per Square Inch Gauge
RCF	Reinjection Compression Facility
ROW	Rights of Way
RWQCB	Regional Water Quality Control Board
SAA	Streambed Alteration Agreement
SOZ	Shallow Oil Zone
SJVAPCD	San Joaquin Valley Air Pollution Control District
SWPPP	Stormwater Pollution and Prevention Plan
SWRCB	State Water Resources Control Board
TEG	Triethylene Glycol
UIC	Underground Injection Control
UL	Underwriter's Laboratories
UNEP	United Nations Environment Programme
USACE	United States Army Corps of Engineers
USDW	Underground Sources of Drinking Water
USFWS	United States Fish and Wildlife Service
VT	Vortex Tank
WAG	Water Alternating Gas
WMO	World Meteorological Organization

Glossary of Terms

Asphyxiant	Inducing or tending to induce asphyxia (the extreme condition caused by lack of oxygen and excess of carbon dioxide in the blood, produced by interference with respiration or insufficient oxygen in the air; suffocation). A substance, such as a toxic gas, or an event, such as drowning, that induces asphyxia.
Corrosivity	Corrosive wastes are acids or bases (pH less than or equal to 2, or greater than or equal to 12.5) that are capable of corroding metal containers, such as storage tanks, drums, and barrels.
CO_2 Facility	The central processing facility at Section 27S where purchased CO_2 is received and produced fluids and gases are received, processed, separated, distributed, compressed and distributed for re-injection. This unit consists of the CTB, RCF, CRP and all associated ancillary equipment.
Hazardous	A situation that poses a level of threat to life, health, property, or environment.
Ignitability	Ignitable wastes can create fires under certain conditions, are spontaneously combustible, or have a flash point less than 60 °C (140 °F). Examples include waste oils and used solvents.
Interfacial Tension	A property of the surface of a liquid that causes the surface portion of liquid to be attracted to another surface, such as that of another portion of liquid
Metallurgy	A domain of materials science that studies the physical and chemical behavior of metallic elements, their intermetallic compounds, and their mixtures, which are called alloys.
Miscible	The property of liquids to mix in all proportions, forming a homogeneous solution. In principle, the term applies also to other phases (solids and gases), but the main focus is usually on the solubility of one liquid in another.
Reactivity	Reactive wastes are unstable under "normal" conditions. They can cause explosions, toxic fumes, gases, or vapors when heated, compressed, or mixed with water.

Sequester	In the context of carbon dioxide, sequestration refers to the placement of the carbon dioxide molecules in a location where they are separated from the atmosphere of the planet, in this case in the subsurface in formations currently holding crude oil and hydrocarbon gas.
Supercritical	Refers to carbon dioxide that is in a fluid state while also being at or above both its critical temperature and pressure, yielding rather uncommon properties. Carbon dioxide usually behaves as a gas in air at STP or as a solid called dry ice when frozen. If the temperature and pressure are both increased from STP to be at or above the critical point for carbon dioxide, it can adopt properties midway between a gas and a liquid.
Toxicity	Toxic wastes are those containing concentrations of certain substances in excess of regulatory thresholds which are expected to cause injury or illness to human health or the environment.
Trapping	In the context of carbon dioxide, trapping refers to the physical, geophysical or geochemical retention of carbon dioxide molecules in the subsurface in formations currently holding crude oil and hydrocarbon gas.
Wellbore	Any hole drilled for the purpose of exploration for or extraction of natural resources such as water, gas or oil where a well may be produced and a resource is extracted for a protracted period of time.
Wellhead	A general term used to describe the component at the surface of an oil well that provides the structural and pressure containing interface for the drilling and production equipment.

DOE Office of Petroleum Reserves – Strategic Unconventional Fuels

Fact Sheet: CO_2 Enhanced Oil Recovery

Background

- Significant volumes of conventional oil remaining in known U.S. oil reservoirs could be produced by injection of carbon dioxide (CO_2).
- CO_2 enhanced oil recovery (CO_2 EOR) has been constrained by economics, technology, CO_2 supply, and pipeline infrastructure.
- Use of CO_2 EOR in additional basins and reservoirs could increase domestic oil supply and provide effective storage of CO_2 produced from unconventional fuels production.
- Current (2005) oil production from CO_2 EOR is approximately 237,000 Bbls/day.[1] (Figure 1)

Figure 1 - U.S. CO_2-EOR Production is growing Most Production Comes from the Permian Basin

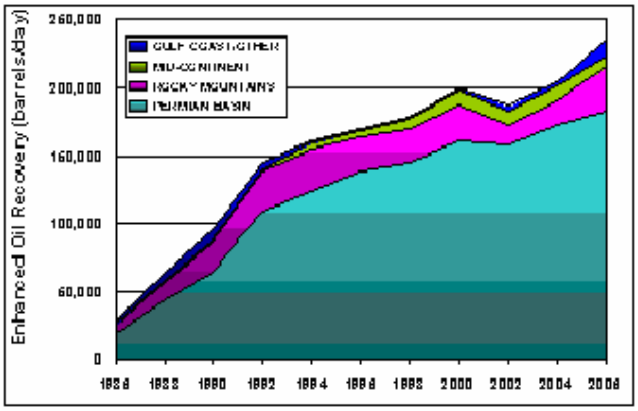

U.S. CO_2 EOR Resources

- Based on the information available in the DOE/NETL Comprehensive Oil and Gas Analysis Model (COGAM), a total of 1,673 fields/reservoirs have been identified as candidates for CO_2-miscible flooding in the United States.
- These fields and reservoirs collectively account for 146 billion barrels of OOIP, with 65 billion barrels of remaining immobile oil as the target resource for CO_2–miscible flooding. (Figure 2)
- Application of CO_2 EOR in candidate reservoirs in other basins depends on the economic availability of CO_2 from natural or industrial sources.

Figure 2 – Potential Target for CO_2 EOR

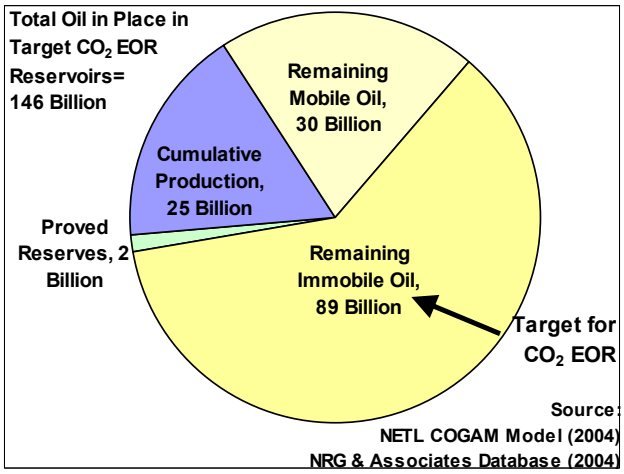

CO_2 EOR Economics

- Construction of new pipelines from CO_2 sources to target basins requires significant capital investments that must be supported by the long-term oil production potential of the target basin and by expectations of future oil prices.
- Oil price volatility is a significant deterrent to CO_2 pipeline and project investment by industry, particularly for smaller independent producers.

CO_2 EOR Technology

- CO_2 injection in conventional oil reservoirs can produce oil unrecovered by primary production or secondary water-flooding. CO_2 acts as a solvent that reduces viscosity and enables the oil to flow to the production well. (Figure 3)[2]

Figure 3 – What is CO_2 Enhanced Oil Recovery?

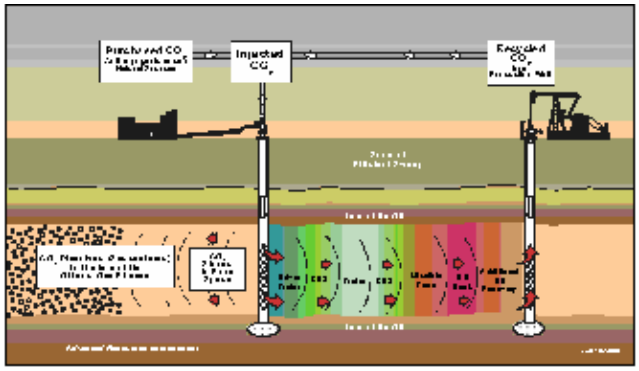

- Significant volumes of injected CO_2 can be recovered from producing wells and recycled by reinjection.
- When production is complete, the depleted reservoir may act as a CO_2 storage site.

CO_2 Sources and EOR Markets

- Natural sources of CO_2 now supply about 950 billion cubic feet (Bcf)/ yr (2.6Bcf/d) for CO_2 EOR projects. Approximately 75 percent is used in projects in West Texas (the Permian Basin). Other states with CO_2 EOR projects include Colorado, Wyoming, and Mississippi. (Figure 4)[3]

Figure 4 - Natural CO_2 Sources and Pipelines

- CO_2 EOR can provide a significant market for "EOR-ready CO_2", from industrial sources, including unconventional fuels projects such as shale oil, oil sands, and coal-to-liquids.
- The potential market is about 380 trillion cubic feet (Tcf,) or about 20 billion metric tons of CO_2. Future oil prices and CO_2 cost will determine how much of this market may be economically captured.[4]

CO_2 EOR Environmental Factors

Environmental concerns associated with CO_2-EOR development differ from those of other unconventional oil resources.

- Most production potential exists in already producing oil fields. So, many environmental concerns are already addressed within the existing regulatory oversight framework for these fields.
- Emissions are generally limited to gases from compressors used for CO_2 injection.
- CO_2 is captured from the production well and recycled, so CO_2 emissions are negligible if injected CO_2 is stored in the reservoir when production is complete, not vented.
- CO_2-EOR projects require significant amounts of water in order to pursue a 'water-alternating-gas," or WAG, injection processes. Much of this water will come from the oil formation itself, as it is produced with the oil.

References

1 Oil & Gas Journal Vol. 105.15, April 17 2006 p.40.
2 Advanced Resources International, 2006.
3 Oil and Gas Journal, April 2006.
4 U.S. DOE Office of Fossil Energy,

Available online at www.sciencedirect.com

ScienceDirect

Energy Procedia 1 (2009) 1989–1996

Energy Procedia

www.elsevier.com/locate/procedia

GHGT-9

Storing CO_2 with Enhanced Oil Recovery

Robert C. Ferguson[(1)], Christopher Nichols[(2)], Tyler Van Leeuwen[(1)]*, and Vello A. Kuuskraa[(1)]

[1]*Advanced Resources International, Inc., 4501 Fairfax Drive, Suite 910, Arlington, VA 22203 USA*
[2]*U.S.Department of Energy/National Energy Technology Laboratory, 3610 Collins Ferry Road, Morgantown, WV 26507 USA*

Abstract

CO_2 enhanced oil recovery (CO_2-EOR) offers the potential for storing significant volumes of carbon dioxide emissions while increasing domestic oil production. This presentation, based on a recently completed study for DOE/NETL, examines the domestic oil resource amenable to CO_2-EOR, the size of the related market for CO_2, and the benefits to the power sector from CO_2 sales to the EOR industry. The study finds that, depending on future oil prices and the costs for purchasing CO_2 from power plants and other industrial sources, from 39 to 48 billion barrels of oil could be economically recoverable with CO_2-EOR. In addition, the size of the market for CO_2 offered by the EOR industry is on the order of 7,500 million metric tons between now and 2030. With advances in CO_2-EOR and storage technology, the economically recoverable oil resource would increase to 54 to 70 billion barrels.

The market for CO_2 from the EOR industry is examined in depth from the coal-fueled power plant industry's standpoint. The sale of CO_2 emissions captured from new coal-fueled power plants could provide significant revenue offsets to the cost of installing carbon capture technology. It is estimated these revenue offsets along with a value for carbon abatement could enable 40% (48 out of 121 GW) of the new coal-fueled power capacity expected to be built between now and 2030 to install CCS. With advances in CO_2-EOR and storage technology the number of power plants with CCS could increase to 50 to 70 GWs. This would provide significant assistance toward addressing CO_2 emissions from this sector, helping drive down the costs of installing CCS technology. © 2009 Elsevier Ltd. All rights reserved.

Keywords: CO_2-EOR; carbon capture and storage; enhanced oil recovery; coal power plants; CO_2 emissions

* Corresponding author. Tel.: [(1)] Tel.: +703-528-8420; fax: +703-528-0439; [(2)]Tel.: 304-285-4172
E-mail address: [(1)]vkuuskraa@adv-res.com; [(1)]rferguson@adv-res.com; [(2)]Christopher.Nichols@NETL.DOE.GOV; [(1)]tvanleeuwen@adv-res.com

doi:10.1016/j.egypro.2009.01.259

1. Introduction

CO_2 enhanced oil recovery (CO_2-EOR) offers the potential for storing significant volumes of carbon dioxide emissions while increasing domestic oil production. Four notable benefits would accrue from integrating CO_2 storage and enhanced oil recovery:

- First, CO_2-EOR provides a large, "value added" market for sale of CO_2 emissions captured from new coal-fueled power plants. The size of this market is on the order of 7,500 million metric tons between now and 2030. Sales of captured CO_2 emissions would help defray some of the costs of installing and operating carbon capture and storage (CCS) technology. These CO_2 sales would support "early market entry" of up to 49 (one GW size) installations of CCS technology in the coal-fueled power sector. With advances in CO_2-EOR and storage technology the market could increase to 10,850 million metric tons which would support up to 70 GW of CCS;
- Second, storing CO_2 with EOR helps bypass two of today's most serious barriers to using geological storage of CO_2 - - establishing mineral (pore space) rights and assigning long-term liability for the injected CO_2;
- Third, the oil produced with injection of captured CO_2 emissions is 70% "carbon-free", after accounting for the difference between the carbon content in the incremental oil produced by EOR and the volume of CO_2 stored in the reservoir . With "next generation" CO_2 storage technology and a value for storing CO_2, the oil produced by EOR could be 100+% "carbon free";
- Fourth, the 39 to 48 billion barrels of economically recoverable domestic oil economically recoverable from storing CO_2 with EOR would help displace imports, supporting a path toward energy independence. It could also help build pipeline infrastructure subsequently usable for storing CO_2 in saline formations.

Various analysts and studies have discussed the potential for storing CO_2 with enhanced oil recovery but have noted (incorrectly) that this option is quite small or is counter productive to reducing CO_2 emissions. For example, the "IPCC Special Report on Carbon Dioxide Capture and Storage", while recognizing that depleted oil fields could provide an attractive, early option for storing CO_2 (particularly with CO_2-EOR), concluded that oil fields would provide only a relatively small volume of CO_2 storage capacity.

The report finds that the opportunity for selling captured CO_2 emissions to the EOR industry and storing these emissions in oil reservoirs using CO_2-EOR is largely providing a market for productive use of CO_2 emissions from the nation's large and growing fleet of coal-fueled power plants.

2. Evaluating the Market for Captured CO_2 Emissions Offered by EOR

The size and value of the market for captured CO_2 emissions offered by enhanced oil recovery rests on three pillars: (1) the size and nature of the domestic crude oil resource base, particularly the large portion of this resource base unrecoverable with existing primary and secondary oil recovery methods; (2) the ability of CO_2-EOR to recover a portion of this currently unrecoverable ("stranded") domestic oil, while efficiently storing CO_2; and (3) the impact of alternative oil prices and CO_2 costs on the volume of oil that could be economically produced.

2.1. The Domestic Oil Resource Base

The U.S. has a large, established oil resource base, on the order of 596 billion barrels originally in-place. About one-third of this resource base, nearly 196 billion barrels, has been recovered or placed into proved reserves with existing primary and secondary oil recovery technologies. This leaves behind a massive target of 400 billion barrels of "technically stranded" oil, Table 1.

Table 1. National In-Place, Conventionally Recoverable and "Stranded" Crude Oil Resources

Basin/Area	OOIP* (Billion Barrels)	Conventionally Recoverable (Billion Barrels)	ROIP** "Stranded" (Billion Barrels)
1. Alaska	67.3	22.3	45.0
2. California	83.3	26.0	57.3
3. Gulf Coast (AL, FL, MS, LA)	44.4	16.9	27.5
4. Mid-Continent (OK, AR, KS, NE)	89.6	24.0	65.6
5. Illinois/Michigan	17.8	6.3	11.5
6. Permian (W TX, NM)	95.4	33.7	61.7
7. Rockies (CO,UT,WY)	33.6	11.0	22.6
8. Texas, East/Central	109.0	35.4	73.6
9. Williston (MT, ND, SD)	13.2	3.8	9.4
10. Louisiana Offshore	28.1	12.4	15.7
11. Appalachia (WV, OH, KY, PA)	14.0	3.9	10.1
Total	595.7	195.7	400.0

*Original Oil in Place, in all reservoirs in basin/area; Calculated through internal ARI analysis and EIA production data.
** Remaining Oil in Place, in all reservoirs in basin/area. Source: Advanced Resources Int'l, 2008.

2.2. Technically Recoverable Oil Resources Using CO_2-EOR

Numerous scientific as well as practical reasons account for the large volume of "stranded" oil, unrecoverable with primary and secondary methods. These include: oil that is bypassed due to poor waterflood sweep efficiency; oil that is physically unconnected to a wellbore; and, most importantly, oil that is trapped by viscous, capillary and interfacial tension forces as residual oil in the pore space.

Injection of CO_2 helps lower the oil viscosity and trapping forces in the reservoir. Additional well drilling and pattern realignment for the EOR project helps contact bypassed and occluded oil. These actions enable a portion of this "stranded oil" to become mobile, connected to a wellbore and thus recoverable.

2.2.1. Current CO2-EOR Activity and Production

According to the latest tabulation of CO_2-EOR activity in the U.S., in the 2008 EOR Survey published by the Oil and Gas Journal, approximately 250,000 barrels per day of incremental domestic oil is being produced by 101 CO_2-EOR projects, distributed broadly across the U.S.

2.2.2. Evolution in CO_2 Flooding Practices

Considerable evolution has occurred in the design and implementation of CO_2-EOR technology since it was developed in the 1970's. Notable changes include: (1) use of much larger (up to 1 HCPV*) volumes of CO_2; (2) incorporation of tapered WAG (water alternating with gas) and other methods for mobility control; and (3) application of advanced well drilling and completion strategies to better contact previously bypassed oil. As a result of the changes mentioned above, the oil recovery efficiencies of today's better designed "state-of-the-art" CO_2-EOR projects have steadily improved.

2.2.3. Technically Recoverable Resources

The reservoir-by-reservoir assessment of the 1,111 large oil reservoirs contained in the ARI database amenable to CO_2-EOR shows that a significant volume, 64 billion barrels, of domestic oil may be recoverable with state-of-the-art application of CO_2-EOR. Extrapolating the data base to national-level results indicates that 87.1 billion barrels

(84.8 after subtracting the 2.3 that has already been produced and proven) of domestic oil may become recoverable by applying "state-of-the-art" CO_2-EOR, Table 2.

Table 2. Technically Recoverable Resources from Applying "State-of-the-Art" CO_2-EOR: National Totals

	Technically Recoverable (Billion Barrels)	Existing CO_2-EOR Production/Reserves	Incremental Technically Recoverable (Billion Barrels)
1. Alaska	12.4	-	12.4
2. California	6.3	-	6.3
3. Gulf Coast (AL, FL, MS, LA)	7	-	7
4. Mid-Continent (OK, AR, KS, NE)	10.7	-0.1	10.6
5. Illinois/Michigan	1.2	-	1.2
6. Permian (W TX, NM)	17.8	-1.9	15.9
7. Rockies (CO,UT,WY)	4.2	-0.3	3.9
8. Texas, East/Central	17.6	-	17.6
9. Williston (MT, ND, SD)	2.5	-	2.5
10. Louisiana Offshore	5.8	-	5.8
11. Appalachia (WV, OH, KY, PA)	1.6	-	1.6
Total	87.1	-2.3	84.8

3. Economically Recoverable Resources

3.1. Economically Recoverable Resources: Base Case Scenario

Out of 85 billion barrels technically recoverable using CO_2-EOR technology, 45 billion barrels of incremental oil are economically recoverable in our base case scenario, Table 3. The Base Case evaluates the CO_2-EOR potential using an oil price of $70 per barrel (constant, real) and a CO_2 cost of $45 per metric ton ($2.38 per Mcf) (delivered at pressures around 2,200 psi to the field, constant and real), Table 4. The 40 billion barrels that are not economic to recover in this scenario are contained in reservoirs that cannot provide a sufficient rate of return, 15%, in this scenario, on a CO_2-EOR project's capital costs.

Table 3. Economically Recoverable Resources from Applying "State-of-the-Art" CO_2-EOR: National Totals at Base Case Economics*

Basin/Area	Incremental Technically Recoverable (Billion Barrels)	Incremental Economically Recoverable* (Billion Barrels)
1. Alaska	12.4	9.5
2. California	6.3	5.4
3. Gulf Coast (AL, FL, MS, LA)	7.0	2.2
4. Mid-Continent (OK, AR, KS, NE)	10.6	5.6
5. Illinois/Michigan	1.2	0.5
6. Permian (W TX, NM)	15.9	7.1
7. Rockies (CO,UT,WY)	3.9	1.9
8. Texas, East/Central	17.6	8.3
9. Williston (MT, ND, SD)	2.5	0.5
10. Louisiana Offshore	5.8	3.9
11. Appalachia (WV, OH, KY, PA)	1.6	0.1
Total	84.8	45.0

*Base Case Economics use an oil price of $70 per barrel (constant, real) and a CO_2 cost of $45 per metric ton ($2.38/Mcf), delivered at pressure to the field.

Table 4. Economically Recoverable Resources from Applying "State-of-the-Art" CO_2-EOR: National Totals at Base Case and Alternative Oil Prices/CO_2 Costs

Oil Prices	CO2 Costs			
($ per Bbl)	($ per metric ton)			
	$35	$45*	$55	$60
Lower Prices				
$50	39.1 BBbls			
Base Case				
$70		45.0 BBbls		
Higher Prices				
$90			47.9 BBbls	
$100				48.3 BBbls

*A CO_2 cost of $45 per metric ton (mt) is equal to $2.38 per Mcf. 15% IRR project hurtle rate

4. The Market for Storing CO2 with EOR

Our analysis shows that significant volumes of CO_2 (ranging from 10 to 13 billion metric tons depending on oil price) can be stored with enhanced oil recovery. In general, about 5 to 6 Mcf (0.26 to 0.32 metric tons (mt)) of purchased CO_2 per barrel of oil is injected and stored as part of CO_2-EOR. This is augmented with 5 to 10 Mcf (0.26 mt to 0.52 mt) of recycled CO_2 during the latter stages of a CO_2-EOR process. With incentives for storing CO_2 emissions and "next generation" CO_2 storage technology, considerably larger volumes of CO_2 could be stored.

4.1. Producing "Carbon Free" Domestic Oil

A typical barrel of crude oil contains 0.42 metric tons (mt) of releasable CO_2 (assuming that 3% of the produced and refined oil barrel remains as asphalt or coke). As such, netting the injection and storage of 0.26 to 0.32 mt of CO_2 emissions against the 0.42 mt of CO_2 in the produced oil, makes the domestic oil produced by CO_2-EOR about 70% (62% to 76%) "carbon free".

4.2. Market Demand for CO_2: Power Plant Perspective

The overall demand for CO_2 by the CO_2-EOR industry can be met by three potential sources of CO_2 supply, namely:

- Natural CO_2 supplies already found and defined in geological structures;
- Industrial, high concentration sources of CO_2 (e.g. refineries and fertilizer plants) that are currently being captured and used by the CO_2-EOR industry; and
- The large volumes of low concentration power plant and industrial emissions of CO_2 that needs to be captured and stored to mitigate CO_2 emissions.

Excluding Alaska, which is not projected to build new coal-fueled power plants to any great extent, the demand for CO_2 in the lower-48 states offered by the EOR industry is 9,694 million metric tons (183.4 Tcf)

Table 5 sets forth the net remaining demand for CO_2 by the EOR industry of 7,470 million metric tons for the lower-48 states, after subtracting the 2,224 million metric tons (42.2 Tcf) of CO_2 available, in the next 30 years, from natural CO_2 deposits and high concentration industrial CO_2 sources (e.g., natural gas processing plants, fertilizer plants) already being captured and used for enhanced oil recovery.

The overall conclusion from the analysis is that CO_2-EOR may provide a 7,500 million metric ton market for captured CO2 emissions by the coal-fueled power generation industry, Table 5. While the actual revenues afforded by this market will be established, in the main, by one-on-one negotiations between individual power companies and oil field operators, the potential size of this market could be large.

Using an oil price of $70 per barrel (Base Case), assuming a delivered CO_2 cost of $45 per metric ton, and subtracting $10 per metric ton for transportation and handling, the revenue potential offered by the CO_2-EOR market could reach $260 billion.

Table 5. Economically Feasible Market Demand for CO_2 by EOR: NEMS/EMM Power Generation Regions*

NEMS EMM Region	Purchased CO_2 Requirements	Natural CO_2**	Industrial CO_2**		Unmet (Net) Demand for CO_2	
	(Tcf)	(Tcf)	(MMcfd)	(Tcf)	(Tcf)	(Million mt)
Region 1 - ECAR	1.1	-	15	***	1.1	58
Region 2 – ERCOT	72.2	25	110	1.2	46.0	2,436
Region 3 – PJM (MAAC)	0.1	-	-	-	0.1	4
Region 4 – MAIN	1.9	-	-	-	1.9	100
Region 5 – MAPP	2.1	-	-	-	2.1	109
Region 6 – NY ISO	-	-	-	-	-	-
Region 7 – NW ISO	-	-	-	-	-	-
Region 8 – Florida	0.2	-	-	-	0.2	9
Region 9 – SERC	40.0	8	-	-	32.0	1,695
Region 10 – SWPP	29.7	5	35	0.4	24.3	1,286
Region 11 – WECC/NWPP	7.8	-	175	1.9	5.9	311
Region 12 – WECC/RMPP	2.3	-	65	0.7	1.6	83
Region 13 – WECC/CA	26.0	-	-	-	26.0	1,377
Region 14 - Alaska	39.6	5	-	-	34.6	1,831
TOTAL U.S.	223.0	43	400	4.2	175.8	9,301
TOTAL Lower-48	183.4	38	400	4.2	141.2	7,470

*Base Case: $70/Bbl oil and $45/mt CO_2

**Assumed available to be produced and productively used by the CO_2-EOR industry in the next 30 years.

***Less than 0.01 Tcf and thus not included in totals.

5. Using Sale of Captured CO_2 Emission for "Early Market Entry" of CCS Technology

A common feature of EIA carbon management studies is that, in general, CCS is not considered, as of yet, a key part of the solution. The reason, according to EIA's EMM cost model, is that using CCS with coal- or gas-fired power is not economically competitive with other options for generating power with low CO_2 emissions.

However, revenues from selling captured CO_2 emissions into the CO_2-EOR market can change the competitive outlook. For example, as shown in Table 6 and Figure 1, the sale of captured CO_2 emissions at $25 to $35 per metric ton can reduce the costs of power generation with CCS by $17 to $24 per MWh, significantly offsetting the costs of installing CCS with new coal-fueled power plants.

Table 6. Relationship of CO_2 Sales Price to Cost Offsets in the Coal-Fueled Power Sector (Year 2020)

Sale of CO_2	Sale of CO_2
@ \$25/mt CO_2	@ \$35/mt CO_2
*7,920 btu/kWh x	7,920 btu/kWh x
94 MMmt CO_2/QBtu x	94 MMmt CO_2/QBtu x
90% Capture	90% Capture
Cost Offset: \$16.80/MWh	Cost Offset: \$23.50/MWh

*Advanced Integrated Gasification Combined Cycle (IGCC) plant.

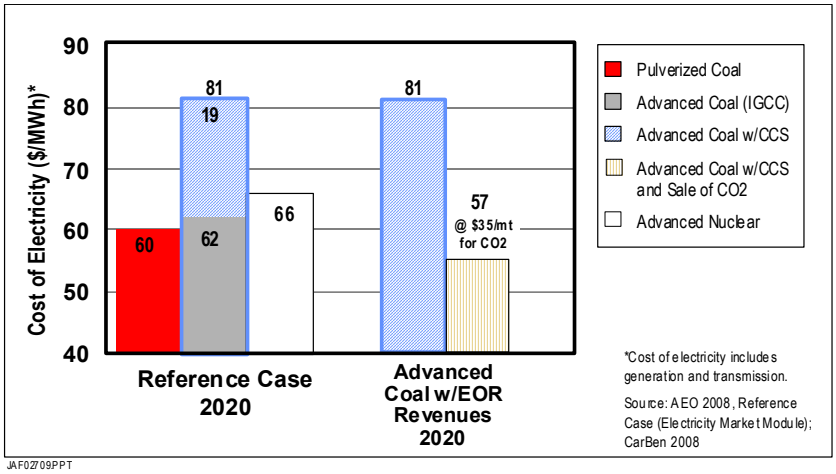

Figure 1. Sale of Captured CO_2 Emissions Can Help Make Coal Plants w/CCS Competitive

The CarBen and EIA EMM models project that 29 new coal-fueled power plants would be placed into operation between 2013 and 2020 in the lower-48. Assuming that half of these power plants are favorably located with respect to oil fields attractive for CO_2-EOR and are able to sell CO_2 at \$35/mt at the plant gate, the integration of CO_2 storage and EOR plus a value for abating CO_2 emissions would support the construction of 15 new advanced coal w/CCS power plants, each with 1 GW of capacity. (A 1 GW advanced coal-fueled power plant built by 2020 is estimated to be able to sell about 5.1 million metric tons of captured CO_2 emissions per year; 15 plants would be able to provide 2,300 million metric tons in 30 years). Sales of captured CO_2 emissions by power plants built after 2020 would support the 33 additional installations of CCS by 2030 for a total of 48 GWs of capacity with CCS.

the ENERGY lab

Carbon Dioxide Enhanced Oil Recovery

Untapped Domestic Energy Supply and Long Term Carbon Storage Solution

NATIONAL ENERGY TECHNOLOGY LABORATORY

U.S. DEPARTMENT OF ENERGY

Introduction

As the United States grapples with the twin challenges of reducing dependence on foreign energy sources and reducing emissions of greenhouse gases, the topic of carbon dioxide (CO_2) enhanced oil recovery (EOR) has received increased attention. In order to help inform the discussion, the Department of Energy's National Energy Technology Laboratory has published this "primer" on the topic. Hopefully, this brief introduction to the physics of CO_2 EOR, the fundamental engineering aspects of its application, and the economic basis on which it is implemented, will help all parties understand the role it can play in helping us meet both of the challenges mentioned above.

Disclaimer

Reference herein to any specific commercial product, process, or service by trade name, trademark, manufacturer, or otherwise does not necessarily constitute or imply its endorsement, recommendation, or favoring by the United States Government or any agency thereof. Neither the United States Government nor any agency thereof, nor any of their employees, makes any warranty, express or implied, or assumes any legal liability or responsibility for the accuracy, completeness, or usefulness of any information, apparatus, product, or process disclosed, or represents that its use would not infringe privately owned rights.

Table of Contents

The Basics of Carbon Dioxide EOR..... 4

Why It works *4*

How It Works *6*

How Much Extra Oil Gets Produced *8*

Where It's Being Done 9

Screening Reservoirs for CO_2 EOR *9*

CO_2 Availability *10*

Anthropogenic CO_2 Sources *11*

U.S. CO_2 EOR Demographics *12*

CO_2 EOR Economics *13*

Its Future Potential..... 14

Production Outlook *14*

Tax Incentives *17*

CO_2 EOR and Sequestration *17*

Sequestration Potential in Oil Reservoirs..... *18*

What DOE is Doing..... 21

What's Next? 23

Glossary..... 26

Contacts 30

The Basics of Carbon Dioxide EOR

Why It Works

Oil and water form separate phases when mixed.

Why does injecting carbon dioxide (CO_2) into the pore spaces of a rock help move crude oil out? CO_2 has two characteristics that make it a good choice for this purpose: it is *miscible* with crude oil, and it is less expensive than other similarly miscible fluids. What does it mean to be miscible? Imagine that you get oil on your tools while working on your car's engine. Water will get a little of the oil off, soap and water will do a better job, but a *solvent* will remove every trace. This is because a solvent can mix with the oil, form a homogeneous mixture, and carry the oil away from the tool's surface. Fluid pairs like ethanol and water, vinegar and water, and engine "degreasers" and motor oil exhibit *miscibilit*y, that is, the ability of fluids to mix in all proportions (see page 26 for a glossary). As we know, "oil and water don't mix," as they are *immiscible*; and as a result, completely removing oil from tools or engine parts requires a solvent.

We could use similar miscible solvents to clean the oil from underground reservoirs, but since these products are refined from crude oil and therefore relatively expensive, it does not make economic sense to do so, regardless of their effectiveness. The same goes for natural gas enriched with heavier hydrocarbons like propane; it is miscible with oil but it is also a valuable commodity. However, underground deposits of CO_2 are relatively inexpensive, naturally occurring sources of the gas that can be extracted in large quantities, making it a more sensible choice. If CO_2 produced by human activities can be captured inexpensively, it could become a source as well.

Oily surfaces can be cleaned if a solvent is used that is completely miscible with the oil.

When we inject CO_2 into an oil reservoir, it becomes mutually soluble with the residual crude oil as light hydrocarbons from the oil dissolve in the CO_2 and CO_2 dissolves in the oil. This occurs most readily when the CO_2 density is high (when it is compressed) and when the oil contains a significant volume of "light" (i.e., lower carbon) hydrocarbons (typically a low-density crude oil). Below some minimum pressure, CO_2 and oil will no longer be miscible. As the temperature increases (and the CO_2 density decreases), or as the oil density increases (as the light hydrocarbon fraction decreases), the minimum pressure needed to attain

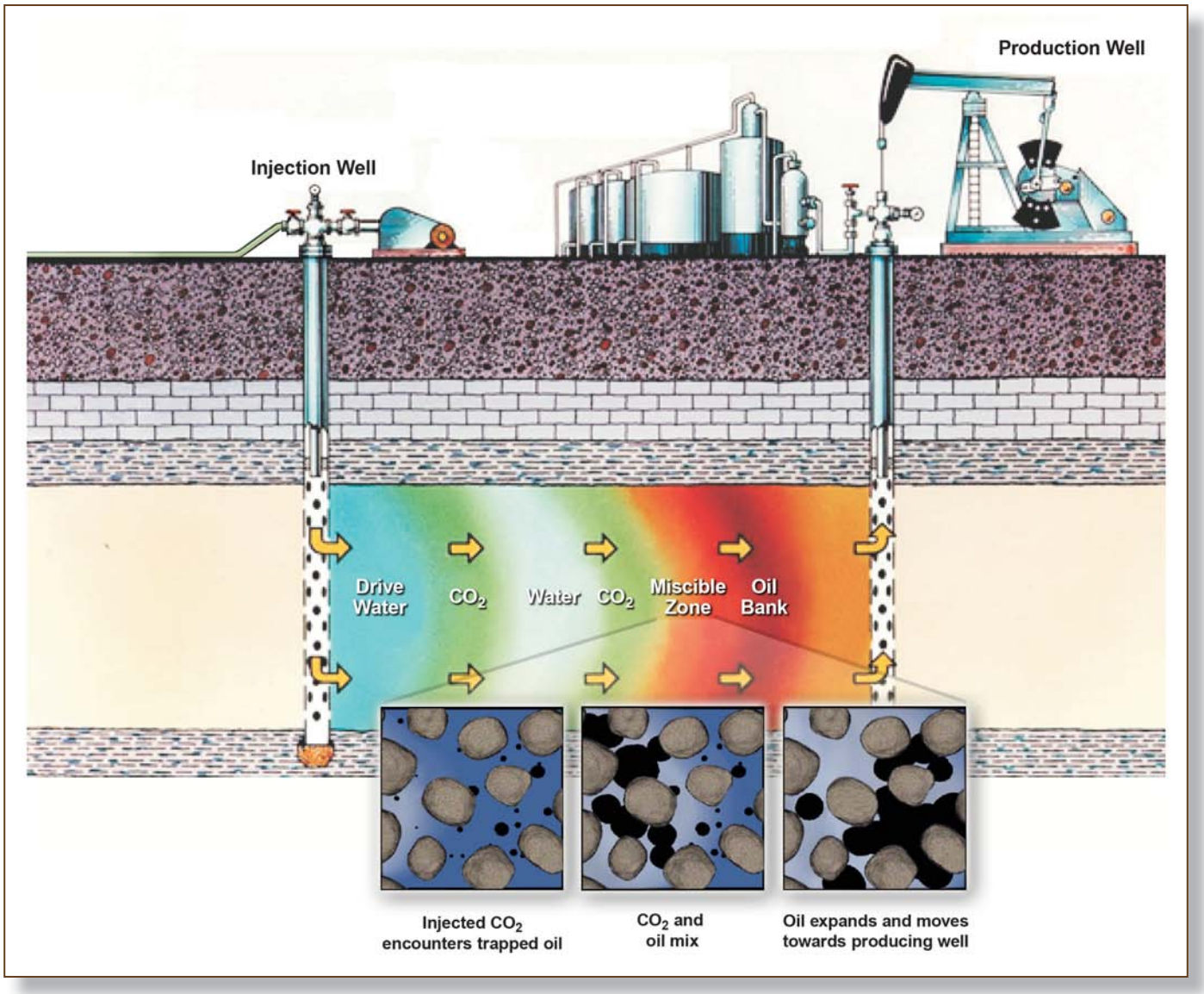

Cross-section illustrating how carbon dioxide and water can be used to flush residual oil from a subsurface rock formation between wells

oil/CO_2 miscibility increases. For this reason, oil field operators must consider the pressure of a depleted oil reservoir when evaluating its suitability for CO_2 enhanced oil recovery. Low pressured reservoirs may need to be re-pressurized by injecting water (see page 6 sidebar on waterflooding).

When the injected CO_2 and residual oil are miscible, the physical forces holding the two phases apart (interfacial tension) effectively disappears. This enables the CO_2 to displace the oil from the rock pores, pushing it towards a producing well just as a cleaning solvent would remove oil from your tools.

As CO_2 dissolves in the oil it swells the oil and reduces its viscosity; affects that also help to improve the efficiency of the displacement process.

Often, CO_2 floods involve the injection of volumes of CO_2 alternated with volumes of water; *water alternating gas* or WAG floods. This approach helps to mitigate the tendency for the lower viscosity CO_2 to finger its way ahead of the displaced oil. Once the injected CO_2 breaks through to the producing well, any gas injected afterwards will follow that path, reducing the overall efficiency of the injected fluids to sweep the oil from the reservoir rock.

Waterflooding and Residual Oil

When an oil reservoir is first produced, the pressure that exists in the subsurface provides the energy for moving the oil, gas and water that is in the rock to the surface. After a while, the pressure dissipates and pumps must be used to remove additional volumes of oil. Depending on the characteristics of the rock and the oil, a considerable amount of the original oil in place may be left behind (perhaps 60 percent or more) as *residual* oil. Waterflooding is a process whereby water is pumped down selected wells to push a portion of the remaining oil out of the rock towards the producing wells. In most cases, CO_2 enhanced recovery operations take place in oil reservoirs where this less expensive waterflooding option has already been implemented, although the remaining oil saturation in the post-waterflood reservoir is still significant, perhaps 50 percent of the original oil in place.

How It Works

The physical elements of a typical CO_2 flood operation can be used to illustrate how the process works. First, a pipeline delivers the CO_2 to the field at a pressure and density high enough for the project needs (>1200 pounds per square inch [psi] and 5 pounds per gallon; for comparison water density is 8.3 pounds per gallon), and a meter measures the volume of gas purchased. This CO_2 is directed to injection wells strategically placed within the pattern of wells to optimize the areal sweep of the reservoir. The injected CO_2 enters the reservoir and moves through the pore spaces of the rock, encountering residual droplets of crude oil, becoming miscible with the oil, and forming a concentrated oil bank that is swept towards the producing wells.

At the producing wells—and there may be three, four or more producers per injection well—oil and water is pumped to the surface, where it flows to a centralized collection facility. The pattern of injectors and producers, which can change over time, will typically be determined based on computer simulations that model the reservoir's behavior based on different design scenarios. A well manifold allows for individual wells to be tested to see how much oil, gas and water is being produced at each location and if the concentration of oil is increasing as the oil bank reaches the producing wells.

The produced fluids are separated and the produced gas stream, which may include amounts of CO_2 as the injected gas begins to break through at producing well locations, must be further processed. Any produced CO_2 is separated from the produced natural gas and recompressed for reinjection along with additional volumes of newly-purchased CO_2. In some situations, separated produced water is treated and re-injected, often alternating with CO_2 injection, to improve sweep efficiency (the WAG process mentioned earlier).

CO_2 pipeline metering

Production well pump jack

CO_2 injection wellhead

In WAG injection, water/CO_2 injection ratios have ranged from 0.5 to 4.0 volumes of water per volume of CO_2 at reservoir conditions. The sizes of the alternate slugs range from 0.1 percent to 2 percent of the reservoir pore volume. Cumulative injected CO_2 volumes vary, but typically range between 15 and 30 percent of the hydrocarbon pore volume of the reservoir. Historically, the focus in CO_2 enhanced oil recovery is to minimize the amount of CO_2 that must be injected per incremental barrel of oil recovered, especially since CO_2 injection is expensive. However, if carbon sequestration becomes a driver for CO_2 EOR projects, the economics may begin to favor injecting larger volumes of CO_2 per barrel of oil recovered, i.e., if the cost of the CO_2 is low enough.

CO_2 processing plant where the gas is collected for re-injection

Separator for separating produced fluids (oil, water, and gas)

Well production manifold to allow individual testing of wells

Compressor for compressing gas prior to re-injection

How Much Extra Oil Gets Produced

The Wasson Field's Denver Unit CO_2 EOR project has resulted in more than 120 million incremental barrels of oil thru 2008.

The production plot shown below illustrates how a field can respond to CO_2 injection. This example, for Shell Oil's Denver Unit in the Wasson Field in West Texas, shows oil and water production, and water and CO_2 injection, over sixty years. The primary production portion of the field's life lasted from 1938 through about 1965. The oil production rate peaked in the mid-1940s and then began to decline as reservoir pressure depleted. The operator initiated pressure maintenance with water injection (waterflooding) in 1965 and oil production rates responded quickly.

As the injected water began to break through at the production wells, the volume of water produced also rose rapidly in the 1970s. By the end of 1982, the volumes of water injected and produced were considerably more than the volume of oil produced. About two years after the operator initiated CO_2 injection in 1983, the oil production decline began to slow and eventually leveled off. At the end of 1998, one could determine the incremental oil attributable to CO_2 EOR by calculating the cumulative difference between the projected decline rate without CO_2 injection and the actual production rate.

In this example, the volumes of oil produced are significant because the Denver Unit flood is large, with more than 2 billion barrels of oil originally in place (OOIP) and a residual oil saturation after waterflooding of 40 percent. The typical well pattern is ten producing wells for every three injectors. Currently, the Denver Unit produces about 31,500 barrels of oil per day, of which 26,850 is incremental oil attributable to the CO_2 flood. The Wasson Field's Denver Unit CO_2 EOR project has resulted in more than 120 million incremental barrels of oil thru 2008.

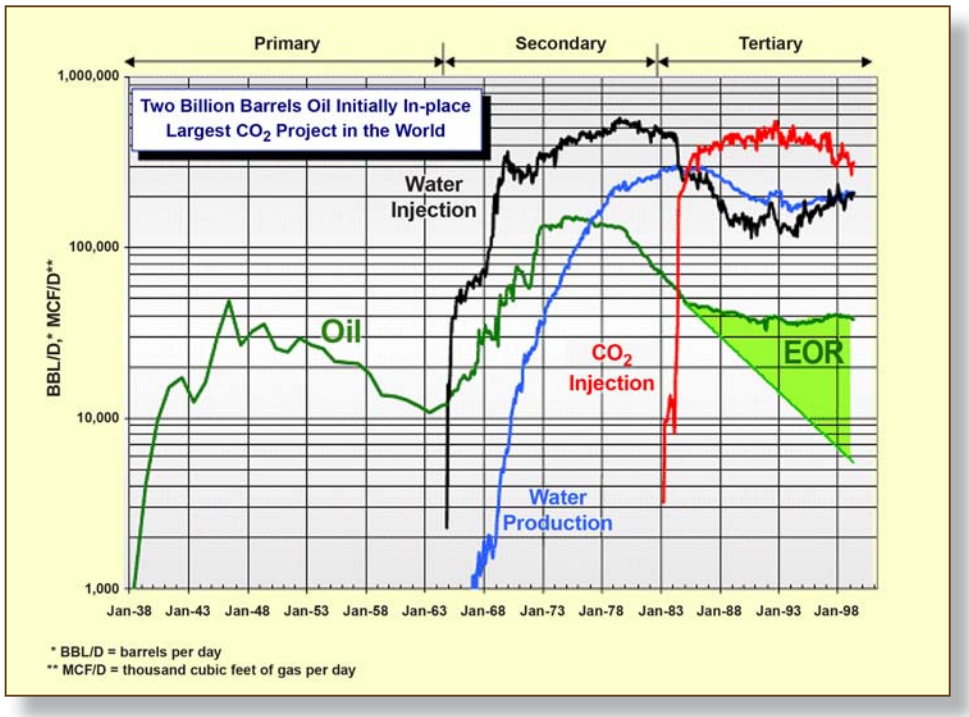

Plot showing oil production versus time for primary, secondary (waterflood) and tertiary (CO_2 EOR) oil production periods for the Denver Unit of the Wasson Field in West Texas. Incremental oil production due to EOR is represented by the green area under the curve at right.

Where It's Being Done

The United States leads the world in both the number of CO_2 EOR projects and in the volume of CO_2 EOR oil production, in large part because of favorable geology. The Permian Basin covering West Texas and southeastern New Mexico has the lion's share of the world's CO_2 EOR activity for two reasons: reservoirs there are particularly amenable to CO_2 flooding, and large natural sources of high purity CO_2 are relatively close. However, a growing number of CO_2 EOR projects are being launched in other regions, based on the availability of low cost CO_2.

Screening Reservoirs for CO_2 EOR

What kinds of reservoirs are most suitable for CO_2 EOR? In theory, any type of oil reservoir, carbonate or sandstone, could be suitable provided that the minimum miscibility pressure can be reached, there is a substantial volume of residual crude oil remaining, and the ability of the CO_2 to contact the crude oil is not hindered by geological complexity. Typically, a reservoir that has undergone a successful waterflood is a prime candidate for a CO_2 flood.

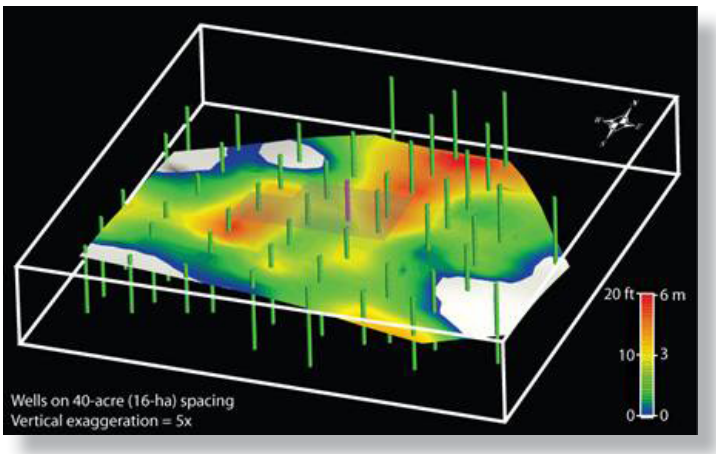

Depiction of reservoir model used for simulation of CO_2 flooding

Most of the large reservoirs in the Permian Basin are carbonate formations—typically limestone or dolomite—that produce from depths of 3,000 to 7,000 feet, and have undergone extensive waterflooding. Post-waterflood recovery could be 30 to 45 percent of the OOIP, with relatively high residual oil saturation. A successful CO_2 EOR project could add another 5 to 15 percent of OOIP to the ultimate recovery.

In addition, the Permian Basin reservoirs tend to feature a low geothermal gradient (i.e., rate of increase in temperature with depth), which makes the pressure required for CO_2 miscibility with the crude oil lower. Geologically, these reservoirs also exhibit a high degree of continuity between wells, and rock that is laterally and vertically uniform, and has relatively high permeability.

Criteria for Screening Reservoirs for CO_2 EOR Suitability

Depth, ft	< 9,800 and >2,000
Temperature, °F	<250, but not critical
Pressure, psia	>1,200 to 1,500
Permeability, md	>1 to 5
Oil gravity, °API	>27 to 30
Viscosity, cp	≤10 to 12
Residual oil saturation after waterflood, fraction of pore space	>0.25 to 0.30

Operators interested in enhancing recovery through CO_2 EOR will screen their reservoirs to determine the best candidates based on rock and fluid characteristics, past production behavior and response to waterflooding, and detailed geological assessments. The screening criteria used to identify favorable reservoirs are reservoir depth, oil gravity, reservoir pressure, reservoir temperature, and oil viscosity. A number of analysts have developed ranges for these screening criteria (see table), which operators can use to high-grade their reservoirs for further detailed technical and economic assessments. Perhaps the most critical factor for selecting candidates for CO_2 EOR is a growing consensus among experts that more detailed geophysical mapping of the remaining oil in a reservoir is needed, particularly in geologically heterogeneous formations.

In the 1980s the Department of Energy (DOE) helped develop software screening tools designed to quickly identify how key variables might influence CO_2 project performance and economics prior to performing a detailed numerical simulation. One such tool, CO_2-Prophet, was developed by DOE and Texaco. A number of other commercial screening tools are now available.

CO_2 Availability

Although the large Permian Basin reservoirs were readily recognized as ideal candidates for miscible flooding through CO_2 injection, it was the ready availability of a low-cost source of CO_2 that drove the Permian Basin's EOR boom in the 1970s and 1980s. The first commercial flood occurred in Scurry County, Texas, in 1972, in what was known as the SACROC Unit (SACROC stands for Scurry Area Canyon Reef Operators Committee). For this project, the operator (Chevron) recovered CO_2 from natural gas processing plants in the southern part of the basin (that would have otherwise been vented) and transported the gas 220 miles for injection at SACROC.

The technical success of this project, coupled with the high oil prices of the late 1970s and early 1980s, led to the construction of three major CO_2 pipelines connecting the Permian Basin oil fields with natural underground CO_2 sources located at the Sheep Mountain and McElmo Dome sites in Colorado and Bravo Dome in northeastern New Mexico (see map). Construction of the pipelines spurred an acceleration of CO_2 injection activity in Permian Basin fields. Today, operators inject more than 1.6 billion cubic feet per day of naturally-sourced CO_2 into Permian Basin oil fields to produce 170,000 barrels of incremental oil per day from dozens of fields.

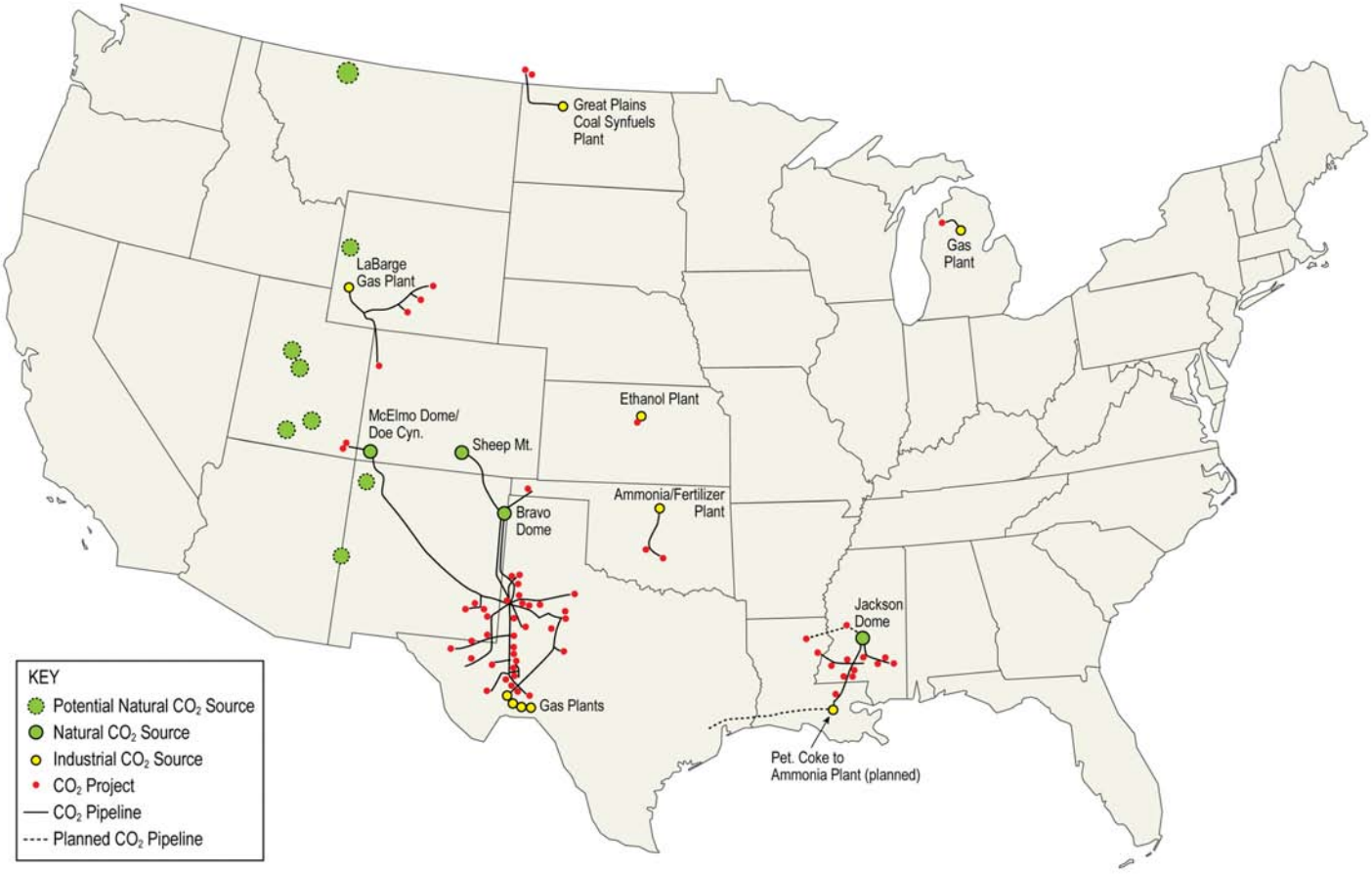

Location of Current CO_2 EOR Projects and Pipeline Infrastructure

But even with CO_2 sources just a few hundred miles away, the cost of delivering and injecting the CO_2 is significant. Industry has spent more than $1 billion on 2,200 miles of CO_2 transmission and distribution pipeline infrastructure in support of CO_2 flooding in the Permian Basin. Typically, it costs $0.25-0.75 per thousand cubic feet to transport CO_2 to West Texas fields from the sources to the north. With a substantial CO_2 pipeline and distribution infrastructure in place, Permian Basin operators have spread the costs among several large fields, and the infrastructure in these "anchor" fields in turn has helped reduce the cost of delivered CO_2 to smaller fields in the basin. Still, analysts have estimated that there is as much as 500 million cubic feet (25,974 metric tons) per day of pent-up demand for CO_2 in the basin from oil field operators seeking to implement economic CO_2 EOR projects. Additional natural CO_2 resource has been discovered in the Arizona-New Mexico region and may be developed if the economics remain favorable.

To the east, Denbury Resources, a Plano, Texas-based independent, is developing a similar infrastructure in Mississippi, Louisiana, and southeastern Texas. Denbury owns a large natural CO_2 resource at Jackson Dome, Mississippi, which it describes as the largest CO_2 resource east of the Mississippi River. Jackson Dome already feeds CO_2 to EOR projects Denbury operates in Mississippi and Louisiana. Denbury plans to build a major extension from the southern terminus of its existing CO_2 pipeline in Louisiana to deliver CO_2 for injection at the Hastings Field in Texas. The company is also negotiating with industrial plants along the pipeline route, including four proposed gasification plants fed by coal or petroleum coke, to secure additional supplies of captured *anthropogenic* (man-made) CO_2 for EOR projects in all three states.

Anthropogenic CO_2 Sources

Much discussion has centered on methods to reduce or eliminate CO_2 emissions from industrial sources due to concerns over CO_2 as a "greenhouse" gas. Prominent in this discussion are concepts to capture and safely and permanently store anthropogenic CO_2 in underground formations, a process known as sequestration. In CO_2 EOR projects, all of the injected CO_2 either remains sequestered underground or is produced and re-injected in a subsequent project, making the notion of using captured anthropogenic CO_2 for EOR in places far removed from natural sources of CO_2 a likely possibility. Companies have already launched several examples of this approach.

For years, ExxonMobil Corp. has sold CO_2 from its La Barge, Wyoming gas processing facility to area oil producers for use in CO_2 EOR projects (see map). The company currently captures 4 million metric tons of CO_2 per year for this purpose.

Another major CO_2 EOR project using industrially sourced CO_2 is located at Weyburn oil field, a Williston basin reservoir just across the U.S. border in Saskatchewan, Canada. EnCana Corp., a Canadian company, injects about 95 million cubic feet (4,935 metric tons) per day of CO_2 into Weyburn, a 55-year-old field, to recover an incremental 130 million barrels of oil via miscible or near-miscible displacement. The CO_2 is sourced from the lignite-fired Dakota Gasification Company synthetic fuels plant in North Dakota, and delivered via a 205-mile pipeline. EnCana estimates that as much as 585 billion cubic feet (30 million metric tons) of CO_2 will be permanently sequestered underground through the project, while boosting the synfuels plant's revenues by about $30 million per year and extending the Weyburn field's life by 20 to 25 years.

Other industrially sourced CO_2 EOR projects are in the offing as well. Independent producers Sandridge Energy Inc. and Occidental Petroleum Corp. are developing a $1.1 billion natural gas processing plant in West Texas that will capture about 265 billion cubic feet (13.5 million metric tons) of CO_2 per year for use in CO_2 EOR operations. Proposals to capture CO_2 from coal-fired power plants, ethanol plants and other industrial processes, and use it to supply EOR projects, are being considered for funding in a number of states.

Conversions

1 metric ton of CO_2 equals 545 cubic meters at standard conditions of 14.7 psi and 70 °F
1 metric ton of CO_2 equals 19.25 thousand cubic feet (Mcf) at standard conditions of 14.7 psi and 70 °F
The average American car emits about seven metric tons of CO_2 per year

U.S. CO_2 EOR Demographics

A proactive technology transfer program led by NETL in the 1990s helped to transfer their CO_2 development concepts to the rest of the industry.

Production from all United States CO_2 EOR projects grew to 240,000 barrels per day in 2008, according to the *Oil & Gas Journal's* biennial survey. CO_2 EOR production has jumped significantly since the early 1980s (see graph). At the same time, the demographics of CO_2 EOR operators have changed. Prior to the early 1990s, almost all CO_2 injection was undertaken by a small group of major oil companies—Amerada Hess, Amoco, ARCO, Chevron, Exxon, Mobil, Shell, and Texaco. A proactive technology transfer program led by DOE's National Energy Technology Laboratory in the 1990s helped to transfer their CO_2 development concepts to the rest of the industry. That effort, together with a shift in major company investment overseas, led to the current situation where independent producers dominate the roster of CO_2 EOR operators (see table).

The SACROC Unit, where commercial CO_2 EOR got its start, is now in the hands of an independent. Kinder Morgan CO_2 Company, which is the second largest producer of oil in Texas and one of the nation's largest owners and transporters of CO_2, has more than tripled SACROC production since acquiring a majority interest in the unit in 2000.

One of the most active CO_2 EOR operators is another independent producer, Occidental Petroleum (Oxy). Oxy operates more than half of the current CO_2 floods in the Permian Basin and is one of the dominant producers of CO_2 EOR oil, and the largest oil producer in Texas.

Major U.S. CO_2 Operators (OGJ Biennial EOR Survey 2008)

Company	Miscible Projects	Locations	Incremental Production (MBO/D*)
Occidental	29	TX, NM	90.2
Hess	6	TX	25.3
Kinder Morgan	1	TX	24.2
Chevron	4	CO, TX, NM	21.3
Denbury Resources	13	MS, LA	17.8
Merit Energy	7	WY, OK	13.6
ExxonMobil	2	TX, UT	11.7
Anadarko	4	WY	9.0
Whiting Petroleum	3	TX, OK	6.9
ConocoPhillips	2	TX, NM	5.5
12 other independents	28	TX, OK. UT, KS, MI	14.9
Total	99		240.4

* thousand barrels of oil per day

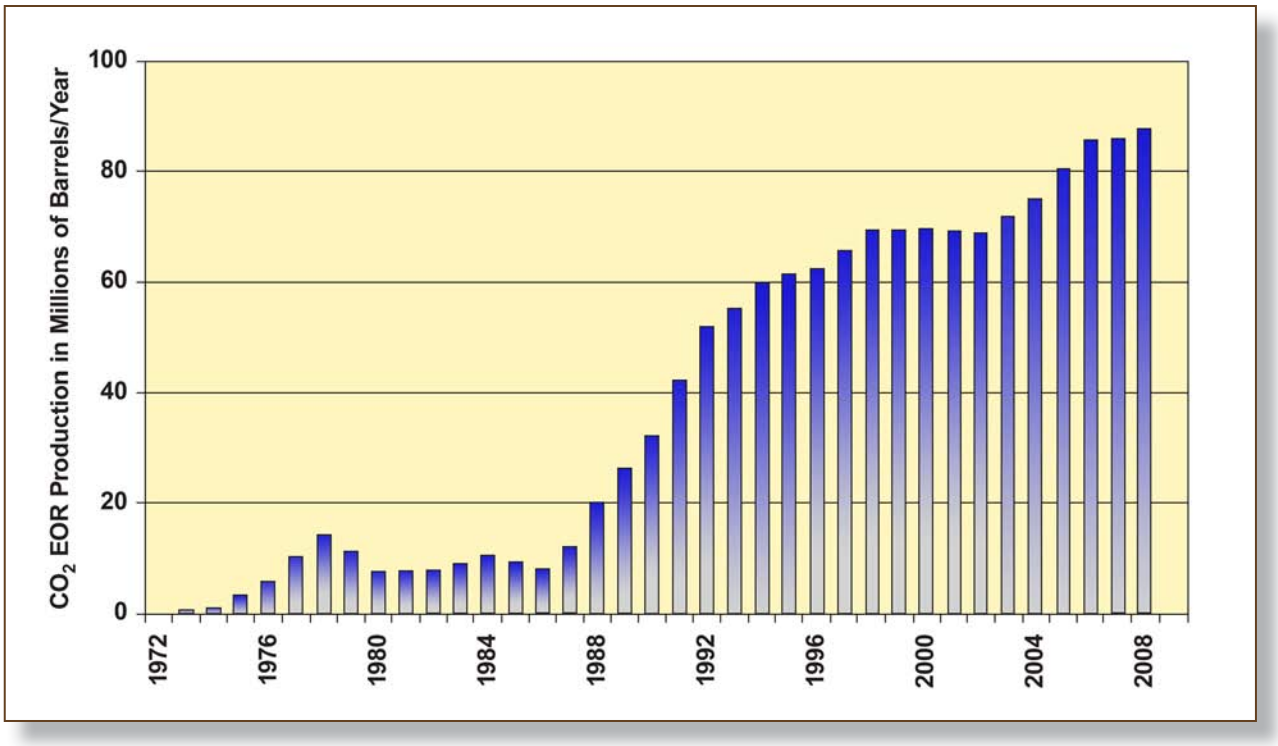

U.S. CO_2 EOR Production

CO_2 EOR Economics

Implementing a CO_2 EOR project is a capital-intensive undertaking. It involves drilling or reworking wells to serve as both injectors and producers, installing a CO_2 recycle plant and corrosion resistant field production infrastructure, and laying CO_2 gathering and transportation pipelines. Generally, however, the single largest project cost is the purchase of CO_2. As such, operators strive to optimize and reduce the cost of its purchase and injection wherever possible.

Higher oil prices in recent years have significantly improved the economics of CO_2 EOR. However, oil field costs have also increased sharply, reducing the economic margin essential for justifying this oil recovery option to operators who still see it as bearing significant risk. Both capital and operating costs for an EOR project can vary over a range, and the value of CO_2 behaves as a commodity, priced at pressure, pipeline quality, and accessibility, so it is important for an operator to understand how these factors might change. Total CO_2 costs (both purchase price and recycle costs) can amount to 25 to 50 percent of the cost per barrel of oil produced. In addition to the high up-front capital costs of a CO_2 supply/injection/recycling scheme, the initial CO_2 injection volume must be purchased well in advance of the onset of incremental production. Hence, the return on investment for CO_2 EOR tends to be low, with a gradual, long-term payout.

Illustrative Costs and Economics of a CO_2 EOR Project

Oil Price ($/Barrel)	**$70**
Gravity/Basis Differentials, Royalties and Production Taxes	($15)
Net Wellhead Revenues ($/Barrel)	**$55**
Capital Cost Amortization	($5 to $10)
CO_2 Costs (@ $2/Mcf for purchase; $0.70/Mcf for recycle)	($15)
Well/Lease Operations and Maintenance	($10 to $15)
Economic Margin, Pre-Tax ($/Barrel)	**$15 to $25**

Given the significant front-end investment in wells, recycle equipment, and CO_2, the time delay in achieving an incremental oil production response, and the potential risk of unexpected geologic heterogeneity significantly reducing the expected response, CO_2 EOR is still considered to be a risky investment by many operators, particularly in areas and reservoirs where it has not been implemented previously. Oil reservoirs with higher capital cost requirements and less favorable ratios of CO_2-injected-to-incremental-oil-produced will not achieve an economically justifiable return on investment without advanced, high-efficiency CO_2 EOR technology and/or fiscal/tax incentives for storing CO_2.

Its Future Potential

Significant potential remains for additional growth in oil production from this process.

While CO_2 EOR has demonstrated significant success over nearly four decades, significant potential remains for additional growth in production from this process. This potential is further enhanced by the possibility of using captured anthropogenic CO_2 in fields that are good candidates for CO_2 EOR but far from natural CO_2 source reservoirs.

CO_2 EOR has increased recovery from some oil reservoirs by an additional 4 to 15 percentage points over primary and secondary recovery efforts that can account typically for about 30 to 35 percent of OOIP. However, some pilot projects have reported incremental recovery of as much as 22 percent, and studies have suggested that new "game-changing" technology innovations that bolster the efficiency of CO_2 floods or enhance geophysical mapping of residual oil pockets could push total ultimate oil recovery in some reservoirs to more than 60 percent of OOIP. CO_2 EOR currently is responsible for about 4 percent of U.S. oil production, displaying a long-term growth trend that stands in stark contrast to the long-term decline trend for U.S. oil production overall.

Production Outlook

In its 2009 Annual Energy Outlook the Department of Energy's Energy Information Administration (EIA) notes that the long-term decline in U.S. crude oil production has slowed over the past few years as drilling activity responded to higher oil prices. Looking out to 2030, EIA forecasts that overall U.S. onshore oil production will increase to 3.8 million barrels per day from 2.9 million barrels per day in 2007, due in part to the increased application of CO_2 EOR (see graph). This increase helps boost Lower 48 oil production high enough to offset a flattening of the growth curve from

deepwater oil production. EIA's assessment assumes that anthropogenic CO_2 will be available at a cost from just under $1 to just over $3 per Mcf, delivered to the field.

The projected rapid take-up of new technology, coupled with higher oil prices, could make a big difference in the outlook for CO_2 EOR's contribution to future U.S. oil production. Certainly, the volume of "stranded" oil left behind in U.S. reservoirs after conventional primary and second recovery techniques is massive—as much as two-thirds of all the oil discovered in the United States resides in this category (see remaining oil pie chart). However, laboratory tests, and a few selected field projects show that significant increases in CO_2 EOR oil recovery efficiency are possible.

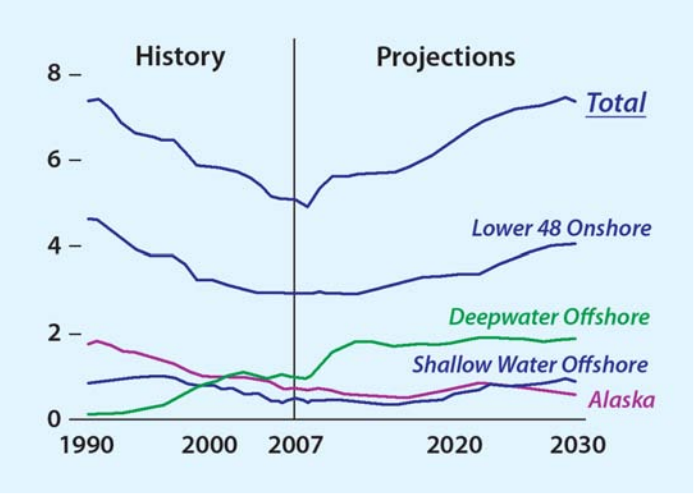

Domestic crude oil production by source 1990-2030 (million barrels per day)

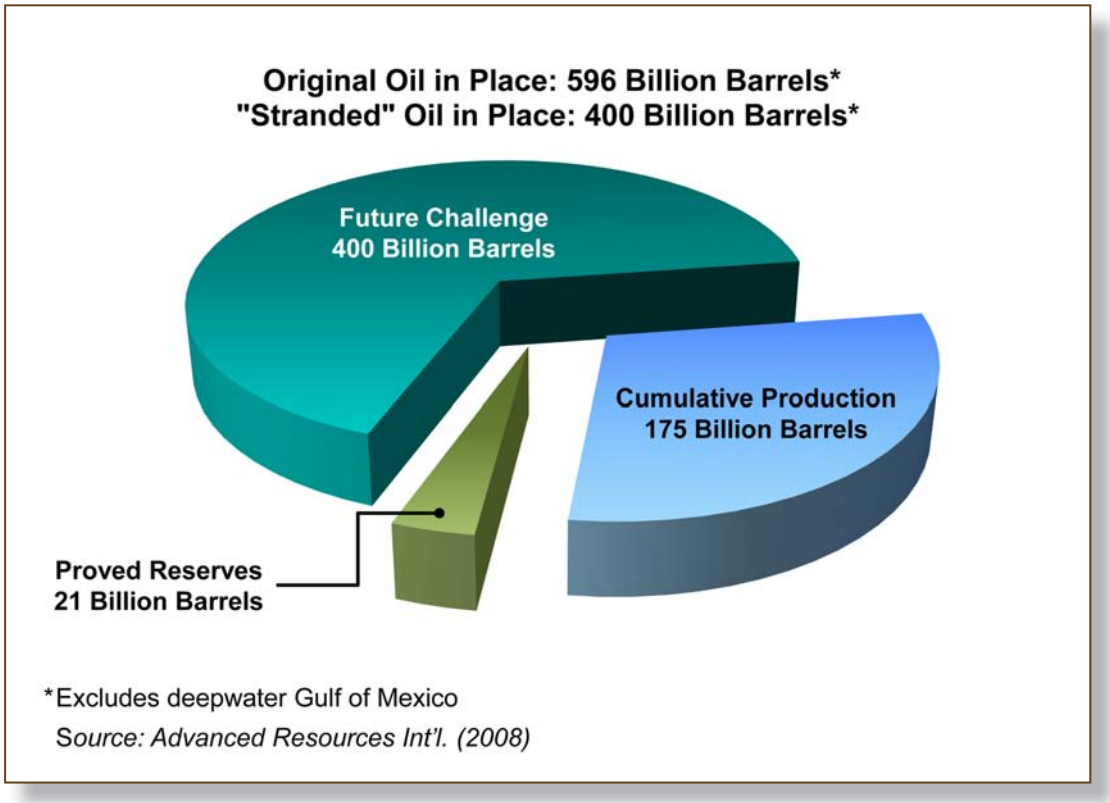

Large volumes of domestic oil remain stranded after primary/secondary recovery.

A 2009 study by Advanced Resources International (ARI) for DOE assessed the role that "best practices" CO_2 EOR technologies could play in U.S. oil recovery. ARI noted that introducing "best practices" technology to regions where it is currently not yet applied, lowering risks by conducting research, pilot tests and field demonstrations in geologically challenging fields, providing state production tax incentives, federal investment tax credits, and royalty relief, and establishing low-cost, reliable, CO_2 supplies, could result in an additional 85 billion barrels of technically recoverable oil from the 400 billion barrels of oil remaining in large reservoirs across 11 basins.

Potential Technically Recoverable Incremental Oil with "best practices" CO_2 EOR Technology

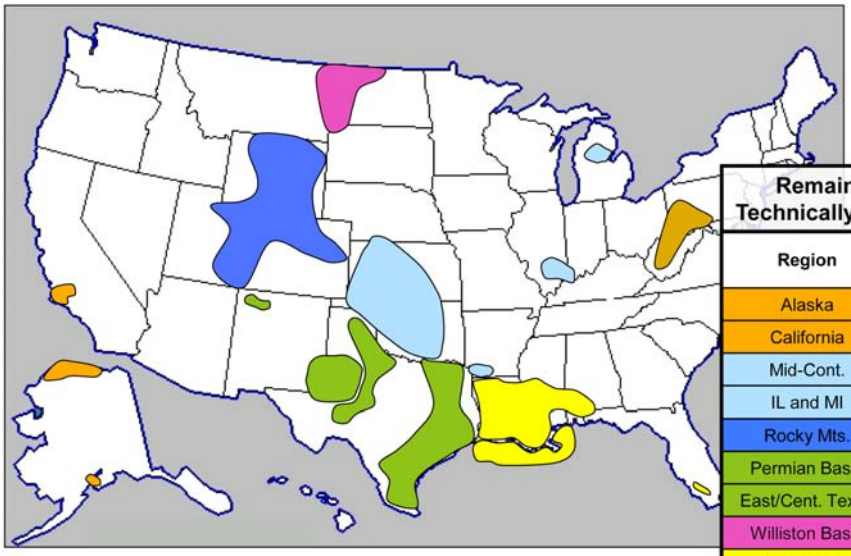

Source: ARI, February 2009

Remaining Oil in Place and Technically Recoverable Oil (BBIs)

Region	ROIP*	Technically Recoverable
Alaska	45.0	12.4
California	57.3	6.3
Mid-Cont.	65.6	10.6
IL and MI	11.5	1.2
Rocky Mts.	22.6	3.9
Permian Basin	61.7	15.9
East/Cent. Texas	73.6	17.6
Williston Basin	9.4	2.5
Gulf Coast	27.5	7.0
LA Offshore	15.7	5.8
Appalachia	10.1	1.6
Total	**400**	**84.8**

* Remaining Oil in Place

Producible if costs, oil price and risks justify investment

However, many factors play a role in the suitability and economics of CO_2 EOR applications—not the least of which are the price of oil and the cost and availability of CO_2. Consequently, there can be a substantial gap between a "technically recoverable resource" and a proven reserve volume booked to an oil company's balance sheet. Still, the study points to the significant potential of CO_2 EOR to contribute to the nation's future oil supply. Increasing the volume of technically recoverable domestic crude oil could help reduce the Nation's trade deficit and enhance national energy security by reducing oil imports, add high-paying domestic jobs from the direct and indirect economic effects of increased domestic oil production and help to revitalize state economies and increase federal and state revenues via royalties, and corporate income taxes.

Tax Incentives

It is important to recognize that much of the CO_2 EOR development that has occurred in the U.S. might not have happened (or might not have happened as quickly) without the introduction of tax credits and other fiscal incentives to help offset the large financial risks. As a means to help boost domestic oil production, the federal tax code has had some sort of incentive for tertiary recovery since 1979, when crude oil was still under federal price controls. Incentives were codified with the U.S. Federal EOR Tax Incentive in 1986, and CO_2 EOR production growth subsequently grew rapidly. This incentive is a 15 percent tax credit that applies to all costs associated with installing a CO_2 flood, the purchase cost of CO_2, and CO_2 injection costs.

In addition, eight states have introduced some form of tertiary oil production tax incentives related to the value of the incremental oil produced. Texas, which produces more than 80 percent of all U.S. CO_2 EOR oil, provides a severance tax exemption on all the oil produced from a CO_2-flooded reservoir.

CO_2 EOR and Sequestration

Beyond its potential to augment U.S. oil production, CO_2 EOR is getting intensive scrutiny by industry, government, and environmental organizations for its potential for permanently storing CO_2. The thinking goes that CO_2 EOR can add value by maximizing oil recovery while at the same time offering a bridge to a reduced carbon emissions future. CO_2 EOR effectively reduces the cost of sequestering CO_2 by earning revenues for the CO_2 emitter from sales of CO_2 to oil producers.

Many experts look to geologic sequestration as one of the best alternatives for dealing with carbon emissions. The CO_2 EOR industry is an industry with a proven track record of safely injecting CO_2 into geologic formations. EOR operations account for 9 million metric tons of carbon, equivalent to about 80 percent of the industrial use of CO_2, every year. Although about 20 percent of CO_2 used in EOR comes from natural gas processing plants, the majority used for EOR comes from natural underground sources and does not represent a net reduction in CO_2 emissions. However, industrial carbon capture and storage (CCS) offers the potential to significantly alter this situation.

Because of the cost of naturally sourced CO_2—roughly $10-15 per metric ton—a CO_2 flood operator seeks to recycle as much as possible to minimize future purchases of the gas. All of the injected CO_2 is retained within the subsurface formation after a project has ended or recycled to subsequent projects. After years of experience with CO_2 floods, oil and gas operators are confident that the CO_2 left in the ground when oil production ends and wells are shut in will stay permanently stored there, assuming the wells are properly plugged and abandoned.

The CO_2 EOR industry is an industry with a proven track record of safely injecting CO_2 into geologic formations.

One major oil industry operation that provides an example of such permanence is StatoilHydro's Sleipner CO_2 project in the North Sea off Norway. The company is developing a large gas field and must strip out CO_2 from the produced gas stream that is about 9 percent CO_2 by volume. Norway's imposition of a tax on emitted carbon of $200 per metric ton—later reduced to $140 per metric ton—led StatoilHydro to compress the captured CO_2 and inject it into a deep saltwater formation below the seabed. The project, initiated in 1996, required an $80 million investment but has resulted in a tax savings of $55 million per year. Regular monitoring of the subsurface shows that the formation is retaining the injected CO_2.

CO_2 EOR technology and equipment needs parallel those envisioned for sequestration, with similar surface infrastructure and wells, similar handling of supercritical (high pressure/low temperature) CO_2, and comparable subsurface simulation and characterization tools (well logs, three-dimensional (3-D) seismic, petrophysical analysis, etc.). The biggest differences between the two are intent (minimizing CO_2 use in EOR vs. maximizing it for sequestration) and regulatory concerns (monitoring, verification, and accounting of the CO_2 over the very long term).

Sequestration Potential in Oil Reservoirs

What is the potential for sequestration of CO_2 from EOR operations? The total volume of CO_2 consumed by U.S. CO_2 EOR to date has been about 11 trillion cubic feet (560 million metric tons). That pales in comparison with total U.S. CO_2 emissions from industrial sources alone of about 100 trillion cubic feet (5,090 million metric tons) per year. However, that does not mean that the potential demand for CO_2 for EOR will be insignificant; EOR could be an enabling catalyst for larger scale sequestration efforts.

EOR could be an enabling catalyst for large-scale sequestration efforts.

For example, a study by Montana Tech University found that CO_2 flooding of Montana's Elm Coulee and Cedar Creek oil fields could result in the recovery of 666 million barrels of incremental oil and the storage of 2.1 trillion cubic feet (109 million metric tons) of CO_2. All of the CO_2 required for the flood could be supplied by a nearby, coal-fired power plant, and would equate to 7 years of the plant's CO_2 emissions. Furthermore, installation of a pipeline and CO_2 capture equipment for the project could provide the basic infrastructure for subsequent storage of CO_2 in other oil fields and in saline formations and unmineable coal seams elsewhere in the state.

A comparison of two maps in the National Energy Technology Laboratory's Carbon Sequestration Atlas of the United States and Canada shows considerable overlap of the respective regional capacities for CO_2 storage in oil and natural gas fields and the major sources of CO_2 emissions.

DOE's Regional Carbon Sequestration Partnership Initiative is the world's most comprehensive field program dedicated to the assessment and validation of carbon sequestration technologies in saline formations, oil fields and

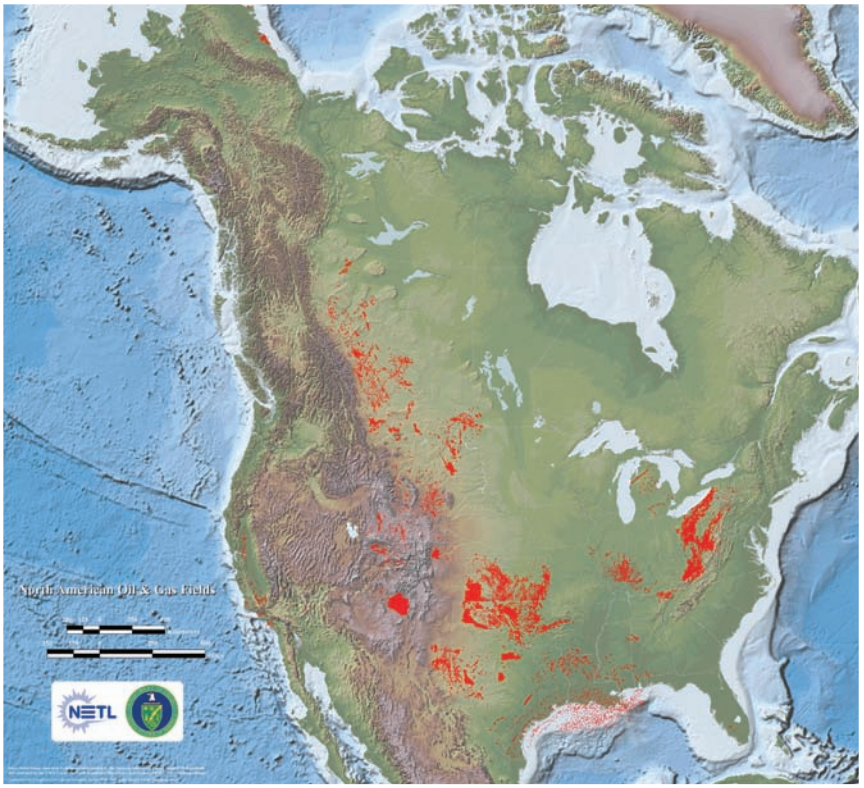

North American oil field distribution and calculated capacities

CO_2 Storage Resource Estimates by Regional Carbon Sequestration Partnership (RCSP) for Oil and Gas Reservoirs		
RCSP	Billion Metric Tons	Trillion Cubic Feet
BSCSP*	1.5	29
MGSC*	0.4	8
MRCSP*	8.4	165
PCOR*	24.1	473
SECARB*	31.1	611
SWP*	65.0	1,277
WESTCARB*	7.7	151
TOTAL	138	2,714

* RCSPs:

BSCSP–Big Sky Carbon Sequestration Partnership

MGSC–Midwest Geological Sequestration Consortium

MRCSP–Midwest Regional Carbon Sequestration Partnership

PCOR–Plains CO_2 Reduction Partnership

SECARB–Southeast Regional Carbon Sequestration Partnership

SWP–Southwest Partnership on Carbon Sequestration

WESTCARB–West Coast Regional Carbon Sequestration Partnership

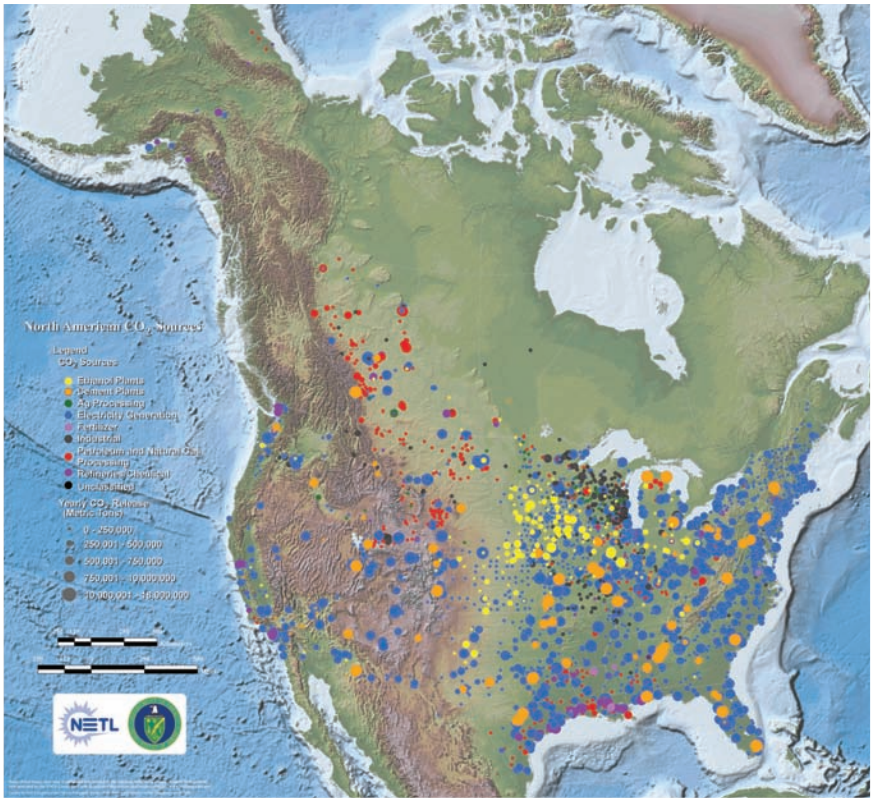

North American CO_2 source distribution

Source: "Carbon Sequestration Atlas of the United States and Canada," DOE/Office of Fossil Energy/NETL, November 2008.

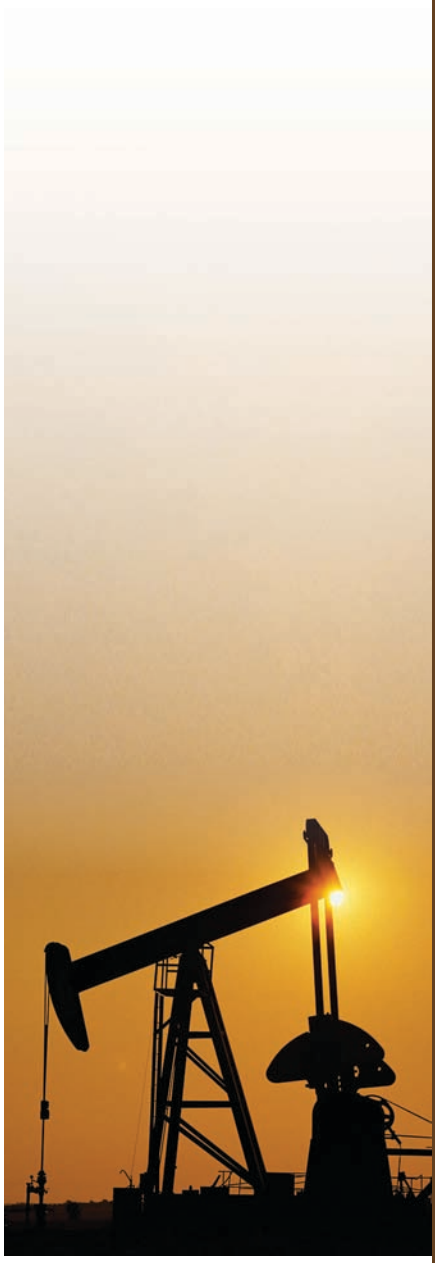

coals seams. DOE has been leading the efforts of the RCSPs to identify the volumes of carbon dioxide that could be stored in oil fields throughout the United States and Canada (see table).

The RCSPs are carrying out DOE-funded R&D field projects designed to validate and develop the potential for carbon capture and storage within their respective areas. A number of these projects combine CO_2 storage with EOR. Ten field projects are being supported throughout the United States and Canada. Seven of the projects have completed injection operations while three are injecting with plans to complete injection by the end of 2010.

The Midwest Geological Sequestration Consortium (MGSC) has evaluated the potential for CO_2 storage in a sandstone oil reservoir in the Loudon field of Fayette, Co., Illinois, and is currently conducting another test in the Sugar Creek field near Madisonville, Kentucky and a third injection test in Mumford Hills, Indiana. The Southeast Regional Sequestration Partnership (SECARB) is testing the potential for CO_2 storage in Denbury's Cranfield Unit near Natchez, Mississippi. The Plains Carbon Dioxide Reduction Partnership (PCOR) continues to carry out research associated with monitoring the fate of CO_2 in a pinnacle reef in Northeastern Alberta. Other RCSPs projects are in the Aneth Field in Utah; Permian Basin in Texas; the Williston Basin in North Dakota. The DOE also supports Encana's Weyburn project in Saskatchewan, Canada. Details about these field projects can be found online at (http://www.netl.doe.gov/technologies/carbon_seq/index.html).

A 2008 study by INTEK for DOE sought to test the economics of a potential linkage between the most likely candidate CO_2 EOR reservoirs and their most likely matching industrial CO_2 sources. The study concluded that as much as 30 trillion cubic feet of CO_2—or 5 billion cubic feet per day at peak rates of injection—could ultimately be stored under this scenario, with a resulting incremental increase in U.S. oil production of 5.5 billion barrels over 25 years.

Another study carried out by Advanced Resources International (ARI) for DOE-NETL concluded that CO_2 EOR could provide a large, value-added market for the sale of CO_2 emissions from new coal-fired power plants—about 7.5 billion metric tons between now and 2030. It puts the value of that market at $260 billion.

Sales of captured CO_2 emissions would help defray some of the costs of installing and operating CCS technology. These sales, in turn, could support early market entry of as many as 49 one-gigawatt installations of CCS technology in the coal-fired power sector, according to the ARI study.

At the same time, concluded ARI, the ensuing CO_2 EOR boom would unlock an additional 39-48 billion barrels of oil prior to 2030, while building a CO_2 transportation infrastructure suitable for subsequent transport of CO_2 for sequestration in deep saline formations—which are likely to have the biggest ultimate CO_2 storage potential of all underground options. The synergies between CO_2 EOR and CO_2 sequestration may be strong enough to help both efforts happen faster. And there are clear energy, environmental, and economic benefits for America in that kind of future.

What DOE is Doing

The Department of Energy's Petroleum R&D Program aims to reduce the technology and cost barriers to increasing recovery from mature conventional oil reservoirs. There is also a significant effort targeting unconventional oil resources such as extra heavy oil, oil and tar sands, oil shale, and oil in unconventional reservoirs (like the fractured Bakken Shale of North Dakota).

Several trends highlight the need for continued research into ways to improve recovery from conventional domestic oil reservoirs.

- Energy demand continues to grow, and the need to slow the growth in oil imports for economic and energy security reasons remains strong.
- Onshore domestic oil production is declining, but there are significant amounts of oil left in conventional reservoirs in mature oil fields.
- Economic extraction of these resources will require research to provide for a better understanding of the geologic nature of these reservoirs as well as new technologies for cost-effectively producing the oil. Yet the operators that are largely responsible for onshore domestic oil production are for the most part independent producers who do not invest in R&D.

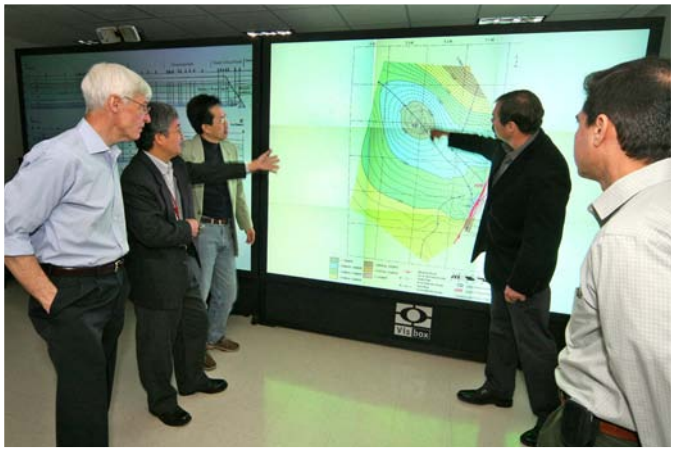

NETL is investigating the potential for recovering incremental oil from the Citronelle Field in Alabama using carbon dioxide EOR. The first stage is developing an improved understanding of the geology using state-of-the-art interpretation techniques. Fields like Citronelle can demonstrate the potential for recovering domestic oil using carbon dioxide captured from industrial sources.

R&D Objective (Performer)

- Evaluate and enhance carbon dioxide flooding through sweep improvement (Louisiana State).
- Improve CO_2 flooding sweep using CO_2 gels (SBIR-RTA Systems Inc.)
- Conduct CO_2 injection tests in the Citronelle oilfield in Mobile County, AL to improve the reliability of computer simulations of oil yield from CO_2-EOR and calculations of sequestration capacity (University of Alabama at Birmingham).
- Determine the economic and technical feasibility of using CO_2 miscible flooding to recover oil in a Lansing-Kansas City formation oilfield in central Kansas (U. Kansas).
- Employ molecular modeling and experiments to design inexpensive, environmentally benign, CO_2-soluble compounds that can decrease the mobility of CO_2 at reservoir conditions (U. Pittsburgh).
- Develop a neural network model for CO_2 EOR (University of Louisiana at Lafayette).
- Develop a novel, low cost method to install geophones for CO_2 monitoring (SBIR-Impact Technologies).

NETL is demonstrating carbon dioxide flooding EOR in the Hall-Gurney field in Russell, Kansas, using carbon dioxide recovered from a nearby ethanol plant.

The need for federal investment in scientific data collection and technology development is driven by the following facts:

- While enhanced oil recovery has been successfully applied in some areas where circumstances are favorable (e.g., Permian Basin), in many other areas perceived risk keeps it just beyond reach. The development and demonstration of new EOR technologies and new ways to apply existing EOR technologies can help to accelerate its application.
- In mature fields that are the targets of EOR, small producers face challenges that are unique to their situation—low productivity wells, high water cuts, aging infrastructure and tight regulatory constraints. These operations are often low margin and are not targeted by the larger service companies' R&D efforts.

Currently there are 26 funded projects in petroleum R&D portion of NETL's program that have either just been completed or are scheduled to continue through 2012. Of these, seven projects are directed at problems related specifically to CO_2 EOR. In addition to these extramural projects, an effort funded through the program instituted by Section 999 of the Energy Policy Act of 2005 aims to evaluate the potential for near-miscible CO_2 flooding in midcontinent reservoirs where circumstances preclude re-pressuring to minimum miscibility pressure. Another project is looking at ways to increase the viscosity of injected CO_2 to improve sweep efficiency.

Together, these projects form a portfolio that is balanced and responsive to the issues facing operators. The data, technologies and tools developed through this portfolio will help industry make decisions and optimize operations in ways that will advance the goal of environmentally sustainable CO_2 EOR.

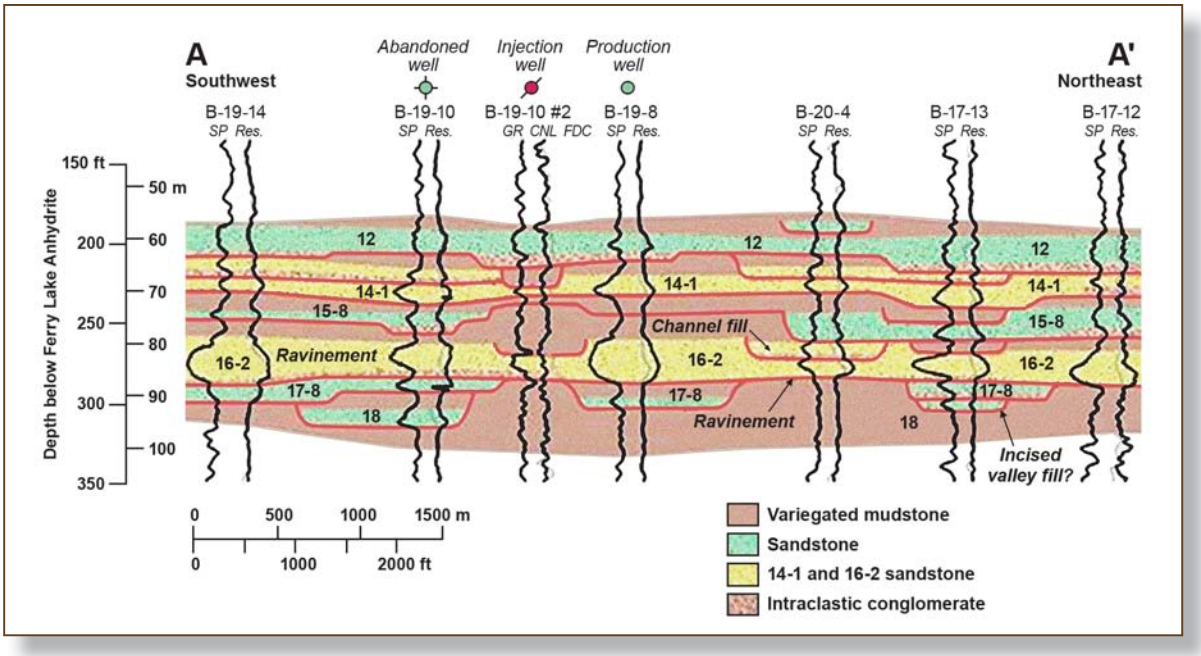

Cross-section through the pilot test area of the Citronelle Field shows the challenge of geologic complexity in fields where CO_2 flooding is being considered. Well B-19-10 #2 is the CO_2 injection well.

What's Next?

The potential impact of CO_2 EOR is not so much a matter of whether but of when. The process works, there is plenty of residual oil in many reservoirs, and there is plenty of carbon dioxide available from a variety of sources. The speed with which CO_2 EOR is applied to recover the oil in U.S. oilfields, will depend on economic decisions that in turn depend primarily on the:

- Price of oil
- Cost of capital (interest rates) and capital infrastructure construction (drilling, gas processing, pipelines)
- Cost of carbon emission taxes, or conversely, the value of carbon sequestration credits
- Cost of carbon dioxide capture from anthropogenic sources
- Pilot project results
- Speed of technology advancement and dissemination

Insulated CO_2 source wellhead

These factors can be hard to predict. Nevertheless, as the regulatory picture begins to become clearer, more CO_2 EOR projects are likely to be implemented.

There is also an important public relations and regulatory aspect to the speed with which CO_2 flooding spreads beyond its current boundaries. Although the places CO_2 flooding will be applied are by definition places where oil has already been produced and people are familiar with oil production activities, in some of these areas the concept of carbon dioxide injection is not well understood. It is important that stakeholders (citizens, investors, regulators, landowners, elected representatives) understand the science behind CO_2 flooding, so that decisions can be made based on facts. Some potential stakeholder questions are listed below.

Won't the carbon dioxide be released when the oil is produced?

No. Any CO_2 that is produced along with oil and natural gas is captured and re-injected. The company operating the EOR project bought the CO_2 and expects to re-inject it if any is produced, to maximize its value. It only has value when it is used to remove oil from the rock formation underground, so there is a strong economic motivation to collect it for re-injection, either in the current project or another. When a CO_2 EOR flood is finished, the CO_2 that remains underground, stays there. Monitoring efforts can be put into place to make sure that is true.

The potential of CO_2 EOR is not so much a matter of whether but of when.

Won't the carbon dioxide leak from underground and cause problems?

No, this is very unlikely. For well-selected, designed and managed geological storage sites, experts calculate that the rock formations are likely to retain over 99 percent of the injected CO_2 for over 1000 years. At the Weyburn Project in Weyburn, Saskatchewan, Canada has determined that the likelihood of any CO_2 release is less than one percent in 5,000 years. There is a strong economic motivation for the operating company to fully understand the geology of the subsurface reservoir before it makes a multi-million dollar investment in infrastructure and pumps millions of dollars of CO_2 underground. The investors want to know where it is going more than anyone does.

How about the pipelines on the surface, can't they leak?

Yes, any pipeline can leak. But just as with natural gas pipelines (which criss-cross the nation and are commonplace in practically every residential neighborhood), there is a strong economic (and regulatory) motivation for operators to keep them from leaking.

How about the old wells in an old oilfield, can't they leak?

Yes, but again there is a strong economic (and regulatory) motivation to make sure that the casing in these wells is still strong, that it is well cemented in place, and that there is no opportunity for communication between the deep formation being flooded and any shallower formations at lower pressure. The loss of CO_2 to unintended places costs money and reduces the efficiency of the process. Every year, natural gas is reinjected at high pressure into gas storage fields around the country, particularly in northeastern states. These fields, many of which are located in populated areas, are developed in the same way that CO_2 projects are developed, by carefully checking old wells to prevent leakage, monitoring them after injection has begun, and repairing or replacing them if necessary.

But isn't the carbon dioxide that is being injected "supercritical?" That sounds dangerous.

Supercritical is a term physicists use to define the physical state of a substance; it has no negative connotation. Carbon dioxide can exist as a gas (what you exhale with each breath), as a liquid (similar to the liquid nitrogen that you remember from science class experiments), and as a solid (the "dry ice" that you sometimes find keeping ice cream cold), depending on its temperature and pressure. At high pressure and low temperature—as a supercritical fluid—CO_2 has properties midway between a gas and a liquid. If the conditions changed to room temperature and pressure, the supercritical CO_2 fluid would shift to the gas phase and dissipate, just as dry ice does.

Can't injecting carbon dioxide into the old oil fields cause earthquakes?

No. Oil companies have been injecting CO_2 in West Texas for decades and have not caused any earthquakes. Large volumes of water have been re-injected into oil fields all over the country without any evidence of the injection having caused earthquakes.

There are a number of places online where additional information can be obtained about CO_2 EOR and CO_2 sequestration.

Some useful links:

National Energy Technology Laboratory (http://www.netl.doe.gov/index.html)

Natural Resources Defense Council (http://www.nrdc.org/energy/eor.pdf)

Kinder Morgan (http://www.kne.com/business/co2/)

Oxy (http://www.oxy.com/Pages/default.aspx)

Denbury Resources (http://www.denbury.com/)

Enhanced Oil Recovery Institute (http://eori.gg.uwyo.edu/)

Glossary

$$\text{API gravity} = \frac{141.5}{SG} - 131.5$$

where SG = specific gravity at 60 °F

$$SG_{oil} = \frac{\text{density of oil}}{\text{density of water}}$$

API gravity – Crude oil is commonly referred to in terms of its "API gravity," a reference established by the American Petroleum Institute that relates the density of a crude to the density of water at standard conditions. The API scale inverts and increases the numerical value of specific gravity (e.g., oil with a specific gravity of 0.93 relative to water has an API gravity of 20, while an oil with a specific gravity of 0.83 has an API gravity of 40). A "light," less dense crude with lighter weight hydrocarbons has a higher API number than a "heavy" crude oil. If a crude's API gravity is less than 10, it is heavier than water and will not float. Mathematically API gravity has no units, but is referred to as "degrees API."

areal sweep – Percentage of the total oil reservoir geographical area which is within the area being swept of oil by a displacing fluid, as in the case of a water flood or carbon dioxide flood. Combined with the *vertical* sweep, it provides a measure of the total *volumetric* sweep of the reservoir.

carbonate rock – Sedimentary rock formed primarily from calcium carbonate ($CaCO_3$) deposited in a marine environment; most commonly limestone. Many of the carbon dioxide floods found in the Permian Basin of West Texas are in oil reservoirs in carbonate formations deposited during the Permian Period.

casing – The tubular steel pipe that is used to line the wellbore as a well is drilled. Casing is cemented in place by pumping cement down the inside of the casing and up the annulus between the outside of the casing and the wall of the hole. It comes in a variety of diameters and as a well is drilled, smaller and smaller diameter strings of casing are placed concentrically into the well and cemented in place, forming a protective barrier between deep and shallow rock formations.

density – A measure of how much mass is contained in a unit volume of a substance. It can be expressed in kilograms per cubic meter, grams per cubic centimeter, pounds per gallon, or other units. Oil density expressed relative to that of water, and natural gas density expressed relative to that of air, at standard pressure and temperature conditions, is termed "oil specific gravity" and "gas specific gravity."

heterogeneous – Consisting of dissimilar elements or parts; not homogeneous. Heterogeneous rock formations are not uniform in terms of their properties but instead vary widely both vertically and laterally. This variation can result in poor sweep efficiency as reservoirs are flooded with water or carbon dioxide, and less than optimal recovery of remaining oil.

high water cut – When an increasingly high percentage of the total fluid produced from a well is water rather than oil (perhaps as high as 99 percent or greater). This tends to be the case as water floods reach the end of their economic life.

hydrocarbon pore volume – The pore volume of a porous, sedimentary rock is that portion of a unit volume of the rock that is pore space rather than solid mineral constitutents (often in the range of 10, 20 or 30 percent). The pore volume is naturally filled with fluids: water, oil and gas. The *hydrocarbon* pore volume is that portion that is filled with hydrocarbons, rather than water.

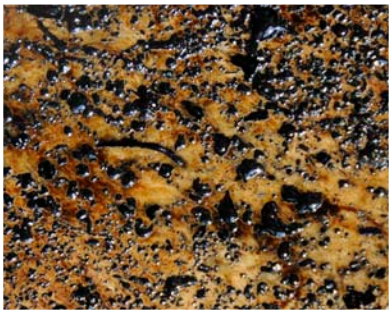

interfacial tension – A phenomenon at the surface separating two immiscible liquids caused by intermolecular forces. The tendency of an interface to contract in order to minimize the interfacial area leads to a state of tension. Reducing interfacial tension allows fluids to mix more intimately and can allow a displacing fluid to more effectively move a displaced fluid.

light hydrocarbons – Lower molecular weight hydrocarbons (fewer carbons). Methane (CH_4) is the lightest hydrocarbon. Other paraffinic series hydrocarbons (ethane, propane, butane, etc.) each successively have one additional carbon atom. High density (low gravity) crude oils typically contain molecules with many carbon atoms.

manifold – A system of pipes and valves that allow for the commingling and/or redirection of flowing fluids from many individual wells at a central production processing facility.

metric ton – Also referred to as a *tonne*, is a measurement of mass equal to 1,000 kg or 2204.6 pounds, or approximately the mass of one cubic meter of water. A U.S. ton is a measurement of mass equal to 2000 pounds. Carbon dioxide is often measured in metric tons. One metric ton of carbon dioxide is equal to a volume of 556.2 cubic meters of the gas at standard conditions of temperature and pressure.

minimum miscibility pressure – The minimum pressure at which a crude oil will be miscible with carbon dioxide at reservoir temperature.

miscibility – The condition where two fluids can be mixed in all proportions; where there is no interface between them.

original oil in place – The volume of oil originally in place in a reservoir before production commences, expressed as a total volume at surface conditions of temperature and pressure (typically in "stock tank barrels" in the U.S.). Oil in place must not be confused with oil reserves, which are the technically and economically recoverable portion of the oil volume in the reservoir. Recovery factors for oil fields around the world typically range between 10 and 60 percent of the original oil in place.

permeability – The ability of a rock to allow fluids (oil, water, and gas) to flow through it by virtue of the interconnectivity of its internal porosity. Fluids move through reservoir rock and into a well due to a pressure gradient (higher pressure out in the reservoir compared to the pressure at the bottom of the well). Higher permeability rock will allow a higher flow rate, all other things being equal. Permeability is a constant in the flow equation for fluid flow through porous media, with units known as Darcies.

primary production – Oil production that is driven by the natural pressure of the reservoir, before any energy is added through water injection (secondary production or secondary recovery) or post-waterflood enhanced oil recovery processes like carbon dioxide injection (tertiary recovery).

reservoir – The rock formation and its fluid contents of water, oil, and gas that make up a hydrocarbon accumulation in the subsurface. An oil reservoir generally is bounded by seals, either structural barriers like faults or lithological barriers like low permeability rocks, that act to trap the hydrocarbons and prevent their migration over geologic time.

residual oil – The oil that remains in a reservoir after primary, secondary or tertiary production (or all three) has taken place. Typically expressed as a percentage of the pore volume.

reworking wells – The act of re-entering a well bore after the well has been producing for some time, generally using a drilling or "workover" rig, to effect repairs or otherwise enhance the ability of the well to produce at commercial rates.

sandstone – A sedimentary rock composed mainly of sand-size mineral or rock grains. Sandstones can result from a variety of depositional environments and can exhibit a range of values for permeability and porosity. Most sandstone is composed of quartz and/or feldspar because these are the most common minerals in the Earth's crust.

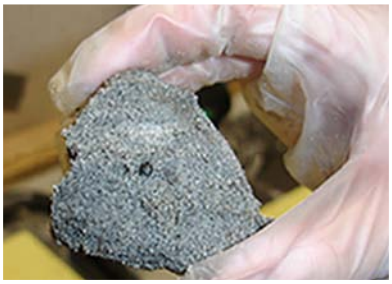

secondary recovery – Oil production that is driven by water injection in a waterflood.

supercritical conditions – Combined conditions of temperature and pressure that place a substance at a point above its critical point. When in a supercritical state, a substance can exhibit properties of both a liquid and a gas (e.g., it may diffuse through solids like a gas, and dissolve materials like a liquid).

tertiary recovery – Oil production that is post-waterflood and driven by enhanced oil recovery (EOR) processes like carbon dioxide injection (other processes include chemical and thermal).

viscosity – Measure of the internal resistance of a fluid to being deformed by either shear stress or extensional stress. With common fluids and terminology, viscosity is though of as "thickness" (e.g., water is "thin," having a lower viscosity, while honey or molasses is considered as "thick," having a higher viscosity. Viscosity describes a fluid's internal resistance to flow and may be thought of as a measure of fluid friction. In general, heavier crudes are highly viscous and thus more difficult to displace using a lower viscosity fluid (like water, or carbon dioxide).

waterflooding – The practice of pumping (injecting) water into selected wells in an oil field, in order to sweep remaining oil from the rock formation and push it towards producing wells were it can be pumped to the surface. Waterflooding is typically (but not always) initiated some time after a field has been significantly depleted under the primary production phase.

well pattern – The pattern of wells in a field; their location relative to each other and the spacing (drainage area per well) that pattern implies. In a waterflood or carbon dioxide flood, the pattern can also indicate the ratio of injectors to producers and their relative position to one another.

Contacts

Strategic Center for Natural Gas and Oil (SCNGO), NETL

Director, SCNGO

John R. Duda
304-285-4217
john.duda@netl.doe.gov

Exploration & Production Technology Manager

Albert B. Yost II
304-285-4479
albert.yost@netl.doe.gov

Ultradeepwater and Unconventional Resources Technology Manager

Roy Long
281-494-2520
roy.long@netl.doe.gov

Department of Energy Headquarters

Of ce of Oil and Gas Resource Conservation

Guido Dehoratiis Jr.
202-586-7296
Guido.Dehoratiis@hq.doe.gov

Of ce of Future Oil and Gas Resources

Olayinka (Yinka) Ogunsola
202-586-6743
olayinka.ogunsola@hq.doe.gov

Photo and figure credits

Cover: wellhead *(Denbury Resources)*, pump jack *(NewsOK)*

Page 6: pipeline *(Kinder Morgan)*, wellhead *(Kinder Morgan)*

Page 7: plant *(Hess Corp.)*, manifold *(Denbury Resources)*, separator *(Whiting Petroleum Corp.)*, compressor *(Steve Melzer)*

Page 9: reservoir model *(Denise J. Hills, Geological Survey of Alabama)*

Page 21: contour map of Citronelle *(Jack C. Pashin, Geological Survey of Alabama)*

Page 22: stratigraphic cross section *(Jack C. Pashin, Geological Survey of Alabama)*

Page 23: wellhead *(Kinder Morgan)*

Page 24: pipeline construction *(Denbury Resources)*, wellhead *(Denbury Resources),* manifold *(Denbury Resources)*, dry ice *(www.EduPic.net)*

Page 25: plant *(Denbury Resources)*

1450 Queen Avenue SW
Albany, OR 97321-2198
541-967-5892

2175 University Avenue South,
Suite 201
Fairbanks, AK 99709
907-452-2559

3610 Collins Ferry Road
P.O. Box 880
Morgantown, WV 26507-0880
304-285-4764

626 Cochrans Mill Road
P.O. Box 10940
Pittsburgh, PA 15236-0940
412-386-4687

13131 Dairy Ashford,
Suite 225
Sugar Land, TX 77478
281-494-2516

WEBSITE: **www.netl.doe.gov**

CUSTOMER SERVICE: **1-800-553-7681**

March 2010

July 2nd, 2007

The Honorable Loni Hancock
Chair, Assembly Natural Resources Committee
California State Capitol
PO Box 942849
Sacramento, CA 94249

Dear Chairwoman Hancock,

We are writing in relation to the scientific issues that were raised around Carbon Capture and Sequestration (CCS) in the context of AB 705 (Huffman) earlier this year. In particular, we would like to clarify some of the issues addressed in the committee staff analysis of the bill and in opposition letters.

We only wish to address the science of CCS here, in order to explain the impetus behind AB 705, which calls for the regulation of CCS operations. As the reaction to AB 705 illustrated, there is a clear need for sincere dialogue and information sharing on the matter between all parties. Environmental Justice advocates in particular raised concerns, and it is in everyone's interest and the duty of policy makers to understand them and proceed in a manner that addresses those and other concerns. Now that AB 705 is a two year bill, we have the opportunity to begin this dialogue. We will therefore not address the specifics of legislation or policy in this letter – rather, we focus exclusively on the science of CCS, on which there exists a significant body of knowledge.

As scientists and researchers, and as advocates representing over one million members and activists, we are extremely conscious of the need to be responsible and rigorous in our views. The information that we present below is based on years of field experience and peer-reviewed research. We hope that you will find it useful as a basis for ongoing, well-informed discussion.

Why consider CCS?

Climate change is one of the most pressing and challenging environmental problems of our time. The problem is real: an overwhelming majority of the world's scientists has once again rung the alarm, presenting their findings in 2007 in the Fourth Assessment Report of the Intergovernmental Panel on Climate Change (IPCC), signed off by 113 governments under the United Nations, including the United States. The Earth's climate is warming, very likely due to human emissions of CO_2 and to a lesser extent other greenhouse gases.

Fortunately, we are already in possession of an array of technologies and solutions that are capable of making significant dents in our emissions. It is clear, however, that there is no silver bullet. We will need all the tools at our disposal. Maximizing energy efficiency should be the first port of call, while renewable energy should be pursued as aggressively as possible. The world still relies heavily on fossil fuels though, and breaking this dependence, even with greatly accelerated energy efficiency and renewables deployment, will not happen overnight. The window of opportunity for action to halt dangerous climate change on the other hand is narrow. The IPCC estimates that we have only ten to twenty years for global emissions to peak and start decreasing if we want to avoid dangerous climate change. The world's coal, oil and natural gas resources on the other hand are abundant, and their use is set to grow even further under a business-as-usual scenario, not least from the recent boom in developing countries such as China and India. Practical reason demonstrates that we urgently need a means to de-carbonize fossil fuel use. CCS is a technology capable of doing so, and not just for coal but for all fossil fuels. CCS can even be used with biomass and lead to net reductions of carbon from the atmosphere.

The status of CCS research

Research on CCS has been taking place for many years now, with major international conferences taking place since the early 1990s. Since then, our knowledge on the subject has greatly expanded, to the extent that the IPCC issued a special report on CCS in 2005[1]. This report represents the most significant landmark in terms of relevant publications: the report was written by almost 100 Lead and Coordinating Lead Authors and 25 Contributing Authors from industrialized countries, developing countries, countries with economies in transition and international organizations. It has been reviewed by more than 200 people (both individual experts and representatives of governments) from around the world. The review process was overseen by 19 Review Editors, who ensured that all comments received the proper attention.

Much like climate change science, there is a substantial body of evidence, knowledge and peer-reviewed literature on CCS that enables us to speak with authority on the subject. In many cases, we can speak with a very high degree of confidence. We can also identify the areas where that is not possible, and where additional research is needed. In any case, there is a very high degree of consensus on the science of CCS, and in the present letter we attempt to convey some of these areas of agreement.

This letter draws on the IPCC Special Report, and is co-signed by Lead Authors and Coordinating Lead Authors of that report.

The nature of CO_2

CO_2 is non-flammable and non-explosive. CO_2 and its products of degradation are not legally classified as toxic substances. CO_2 is non-hazardous on inhalation, is a non-irritant and does not sensitize or permeate the skin. CO_2 is considered harmless and non-toxic as a normal constituent of the atmosphere. The current US occupational exposure standard sets the maximum allowable concentration of CO_2 in air at 0.5% for eight hours continuous exposure, while the maximum concentration to which operating personnel may be exposed for a short period of time is 3.0%.

It is not accurate to portray CO_2 as a deadly and suffocating substance. The impact of elevated CO_2 concentrations on humans depends on the concentration and duration of exposure. At low concentrations CO_2 is not harmful and is, in fact, essential for life. Only at high concentrations could CO_2 be harmful, but exposure to high concentrations is not expected to result from CO_2 storage operations. Today, more than 25 million tons of CO_2 are pumped underground each year in the U.S. for enhanced oil recovery, demonstrating that CO_2 handling and storage operations can be carried out safely and without exposing workers or the public to unsafe conditions.

Has CCS been tried before?

Yes. CCS is a three-stage process. It entails capturing (i.e. isolating or stripping) the CO_2 from its source, compressing and transporting it, and injecting it into a suitable geological formation. All three stages have been demonstrated and operated in large, commercial scale installations.

CO_2 is stripped from power plant or industrial facilities' slipstreams to supply the food industry. It is also routinely stripped in natural gas processing facilities to reduce the CO_2 content of the gas and bring it down to commercial specifications. CO_2 is also being stripped at synthetic fuel production facilities.

---

[1] **Intergovernmental Panel on Climate Change,** Special Report on Carbon Dioxide Capture and Storage, 2005. Available at http://www.ipcc.ch

Pipelines today operate as a mature market technology and are the most common method for transporting CO_2. The first long-distance CO_2 pipeline came into operation in the early 1970s. In the United States, over 2,500 km of pipeline transports more than 40 million tons CO_2 per year from natural and anthropogenic sources, mainly to sites in Texas, where the CO_2 is used for Enhanced Oil Recovery (EOR).

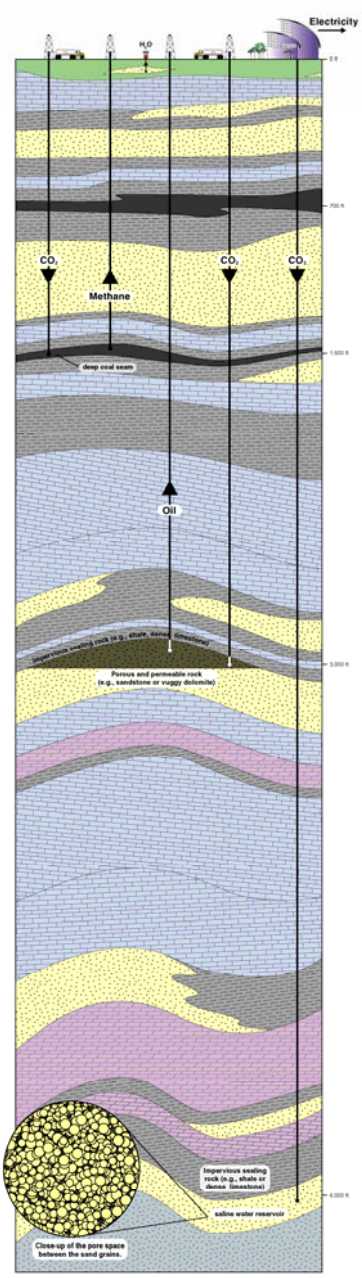

Cross section of a typical stratigraphy from the Illinois Basin, showing multiple layers of caprocks (grey) – Source: Illinois Geological Survey and Midwest Geological Sequestration Consortium

Some 35 million tons of CO_2 annually are injected in mature oil reservoirs for the purposes of EOR, a practice that has been around for several decades. The CO_2 aids in retrieving oil that is otherwise stranded in reservoirs, which would be near the end of their economic life without such advanced techniques. Although the objective in this process is to maximize oil yields and not to sequester CO_2, the two processes are fundamentally similar and share much of the same operational engineering.

Moreover, several commercial and research projects worldwide capture and/or inject CO_2 in geological formations. Of these, three stand out because of their scale and their widely publicized results: Sleipner in Norway, Weyburn in North Dakota/Canada and In Salah in Algeria. These projects have been operating since 1996, 2000 and 2004 respectively, and have been studied intensely. The results show that <u>there is no reason to expect any CO_2 leakage from these projects, and that the injected volumes are very likely to remain permanently sequestered in their respective reservoirs</u>.

Can we be confident that the CO_2 will remain sequestered underground?

The projects just mentioned give us a great deal of confidence that CO_2 can remain permanently sequestered in geological reservoirs. There are multiple trapping mechanisms for CO_2 in these reservoirs, operating at various time scales. *Residual trapping* limits CO_2 mobility in a formation through capillary forces, much like a sponge traps air that has to be squeezed repeatedly in order to let water in. *Solubility trapping*, whereby CO_2 dissolves in the formation fluids, ensures that the CO_2 is no longer buoyant and therefore tends to sink rather than rising towards the surface. *Stratigraphic trapping* occurs when overlying, impermeable rock formations prevent any upwards movement of CO_2 from the underlying reservoir rock, effectively acting as lids (see adjacent figure). Appropriately selected injections sites will possess several layers of such caprocks, and thus multiple reinforcements to the other trapping mechanisms. Finally, *mineralization trapping* takes place when the CO_2 over time forms carbonate minerals and essentially becomes part of the solid rock into which it was injected.

The IPCC report concluded the following:

"Observations from engineered and natural analogues as well as models suggest that the fraction retained in appropriately selected and managed geological reservoirs is very likely to exceed 99% over 100 years and is likely to exceed 99% over 1,000 years. <u>For well-selected, designed and managed</u>

geological storage sites, the vast majority of the CO_2 will gradually be immobilized by various trapping mechanisms and, in that case, could be retained for up to millions of years. Because of these mechanisms, storage could become more secure over longer timeframes".

In support of that statement, a recent MIT study[2] concluded that:

"Although substantial work remains to characterize and quantify these mechanisms, they are understood well enough today to trust estimates of the percentage of CO_2 stored over some period of time – the result of decades of studies in analogous hydrocarbon systems, natural gas storage operations, and CO_2-EOR. Specifically, it is very likely that the fraction of stored CO_2 will be greater than 99% over 100 years, and likely that the fraction of stored CO_2 will exceed 99% for 1000 years. Moreover, some mechanisms appear to be self-reinforcing. Additional work will reduce the uncertainties associated with long-term efficacy and numerical estimates of storage volume capacity, but no knowledge gaps today appear to cast doubt on the fundamental likelihood of the feasibility of CCS".

The remaining 1% is a number used by IPCC authors to take into account any uncertainties such as very small amounts of CO_2 that might be vented during the operation of sites due to human factors over those very long periods, and does not reflect reduced confidence in the underlying geology or the ability of formations to retain the overwhelming majority of the injected CO_2. There is every possibility that even this tiny fraction will not reach the atmosphere with proper site operation and regulation, bringing the total retained fraction to 100%. The 1% figure in no way implies leakages that could harm human health or the environment – we examine this further below.

We must therefore caution strongly against scenarios that present leakage as inevitable, or even likely. Leakage is conceivable, but is unlikely in well-selected sites, is generally avoidable, predictable, can be detected and remedied promptly, and in any case is extremely unlikely to be of a magnitude that would endanger human health and the environment if performed under adequate regulatory oversight and according to best practices. There is overwhelming scientific evidence and knowledge that catastrophic leakage from a geological sequestration site is extremely unlikely, especially with effective regulatory controls. After all, it should come as no surprise that the same geologic formations and types of reservoirs that have stored oil, natural gas as well as naturally occurring CO_2 itself for millions to hundreds of millions of years, are also capable of permanently retaining CO_2 injected by humans.

Industrial analogues for CO_2 sequestration

We may also draw useful conclusions on the safe operation of CO_2 injections from industrial analogues with comparable risks that have been permitted and practiced under regulatory schemes for years (we are not taking a position on these practices – simply comparing risks).

Underground natural gas storage projects offer experience relevant to CO_2 storage. They have operated successfully for almost 100 years and in many parts of the world. The majority of gas storage projects are in depleted oil and gas reservoirs and saline formations, although caverns in salt have also been used extensively. Underground natural gas storage is safe and effective. Of the few projects that have leaked, this has been mostly caused by poorly completed or improperly plugged and abandoned wells, and by leaky faults. Operators are perfectly capable of ensuring the safe operation required, even very close to heavily populated areas, with a high degree of confidence. A prominent example is the Berlin Natural Gas Storage Facility, located in central Berlin, Germany, in an area that combines high population density with nature and water conservation reservations. California has nine natural gas storage sites, four of which are located

[2] **Massachusetts Institute of Technology.** "The Future of Coal – Options for a Carbon Constrained World, An Interdisciplinary MIT Study", 2007. Available at: http://web.mit.edu/coal/

between Santa Barbara and Long Beach, with the remainder in the northern half of the state. These have been operated safely despite the highly flammable and explosive nature of natural gas.

"Acid gas" injection operations also represent a commercial analogue for some aspects of geological CO_2 storage. Acid gas is a mixture of H_2S and CO_2, with minor amounts of hydrocarbon gases that can result from petroleum production or processing. Although the purpose of the acid gas injection operations is to dispose of H_2S, significant quantities of CO_2 are injected at the same time. Acid gas is currently injected into 51 different formations at 44 different locations across the Alberta Basin in the provinces of Alberta and British Columbia. Carbon dioxide often represents the largest component of the injected acid gas stream, in some cases up to 98% of the total volume. A total of 2.5 million tons CO_2 and 2 million tons H_2S had been injected in Western Canada by the end of 2003 with no detectable leakage. Injection takes place in deep saline formations at 27 sites, and into depleted oil and/or gas reservoirs or the underlying water leg at 23 sites. Since the first acid-gas injection operation in 1990, 51 different injection sites have been approved, of which 44 are currently active. No safety incidents have been reported since the first operation in the world started injecting acid gas into a depleted reservoir on the outskirts of the city of Edmonton, Alberta. Given that H_2S is more toxic and corrosive than CO_2, the success of these acid-gas injection operations indicate that the engineering technology for CO_2 geological storage is in a mature stage[3].

The Lake Nyos/Monoun incidents – or "What does an oil field have in common with a volcano?"

Some geologic systems, typically spas and volcanic systems, are inherently leaky and not useful analogues for geological sequestration. Extensive open fault structures offer leakage pathways for gases like CO_2 to the surface. The Kilauea Volcano in Hawaii emits on average 4 million tons CO_2/yr. More than 438,000 tons CO_2/yr leaked into the Mammoth Mountain area, California, between 1990-1995.

Seepage of naturally occurring CO_2 into Lake Nyos (Cameroon) resulted in CO_2 saturation of water deep in the lake, which in 1987 produced a very large-scale and (for more than 1700 people) ultimately fatal release of CO_2 when the lake vented. Two years earlier in nearby Lake Monoun there was a smaller release of CO_2 that killed approximately 37 people.

The Nyos and Monoun events have been studied extensively, The International Energy Agency compiled a report on natural releases of CO_2 specifically to address concerns and to explore any parallels with engineered sites[4]. The report was submitted for peer review by experts, and below we draw on its findings. The IPCC itself concluded that "[the venting of] Lake Nyos, a deep, stratified tropical lake and release of CO_2 from it are not representative of the potential seepage through wells or fractures that may occur from engineered geological sequestration sites".

Why is this so? There are several factors that render the Lake Nyos/Monoun incidents unique, and that make them very different to CO_2 sequestration sites:

- Nyos and Monoun are volcanic lakes, surrounded by high crater walls. Any leaking CO_2 will therefore tend to sink into and "hug" the adjacent valleys, since it is heavier than air. Engineered sites would often be located where mixing of air would lead to the dilution of any CO_2.

---

[3] **Bachu, S. and W.D. Gunter.** Overview of acid-gas injection operations in western Canada. In: Proceedings of the 7th International Conference on Greenhouse Gas Control Technologies. Volume 1: Peer-Reviewed Papers and Plenary Presentations, Vancouver, BC, September 5-9, 2004.

[4] "A Review of Natural CO_2 Occurrences and Releases and their Relevance to CO_2 Storage". Available at: http://www.co2storage.org/Reports/Natural%20Releases%20Report.pdf

- There was a constant supply of CO_2 to the bottom of the lakes through the subsurface. Volcanic regions are characterized by the presence of high fluid pressures and explosive activity. Tectonic activity also leads to the development of cracks, voids, vents and fissures in the ground, all of which are conducive to the migration of CO_2 through the subsurface and buildup at the ground surface. In stark contrast, the sedimentary basins that would be utilized for CO_2 sequestration lie in stable geologic environments commonly containing natural fields of oil and gas, which prove their ability to retain buoyant fluids, frequently for millions of years. The trapping mechanisms outlined previously would ensure that no CO_2 would ever reach the ground surface or lake bottoms at properly chosen and operated sites – in fact it would remain in the storage formation where it was injected, thousands of feet deep underground.

- The lakes released a very large volume of CO_2 in a very short amount of time, in what has been since termed as a "limnic eruption" (as opposed to the well known "phreatic" volcanic eruption). Both lakes are "stratified", meaning that the various layers of water along their depth do not mix. CO_2 had been accumulating in the bottom of the lakes undisturbed for years at steady rates, dissolving in the water. The eruption and release of the CO_2 took place when the stratification of the lakes was disturbed, likely because consecutive cloudy days and lower temperatures allowed water from the top of the lake to sink towards the bottom, disturbing the water column. A positive feedback system, or chain reaction, was set up, whereby the CO_2 came out of solution all at once, bubbling up to the surface. The amount released at Lake Nyos is estimated at 1.24 million tons CO_2, approximately equal to the amount injected <u>each year</u> in the world's largest sequestration projects today. The sudden release of a year's or so worth of CO_2 from engineered sites in such a short amount of time is simply not possible: neither release through geological pathways nor through man-made wells could lead to such catastrophic rates. Geological leakage pathways are inherently convoluted, and involve the CO_2 weaving its way through several thousand meters of rock structures that do not facilitate its passage – any leakage from such pathways would only be slow and gradual, and would in any case only take place at unsuitable sites that should not have been chosen in the first place. Leakage from wells on the other hand would be limited by several mechanisms (such as low CO_2 mobility in the injection reservoir and the "Joule-Thomson effect" whereby CO_2 would freeze and solidify on its way up a well due to the sudden drop in pressure), is easily detectable and can be plugged in a routine fashion to stop the leak completely.

- The presence of the still, stratified water body of the lakes prevented the CO_2 seeping up from the ground from being released at a constant rate. Instead, it allowed it to accumulate and huge volumes to be released all at once. For offshore geological reservoirs that lie underneath the ocean floor surface, the same would not be possible. Ocean water mixes freely due to wind, waves and seasonal temperature fluctuations. This would ensure that any leaking CO_2 – and again we must stress that it is unlikely that there would be any – would be vented instead of building up.

Deliberate degassing of Lake Nyos

As part of an international program to eliminate hazard from Lakes Nyos and Monoun, a degassing program is now in place. CO_2 from the bottom of the lakes is now <u>deliberately</u> brought up to the surface at a steady rate using man-made tubes[5]. This prevents a similar CO_2 bubble from forming, and releases the gas at rates and concentrations that are harmless. An engineered sequestration site is several steps ahead of even this harmless arrangement, ensuring that <u>no</u> CO_2 leaks in the first place. Multiple layers of impermeable caprocks, thousands or hundreds of meters below the ground surface, would ensure that the CO_2's chances of reaching the surface are slim or non-existent, in stark contrast to the volcanic vents that deposited a constant supply of CO_2 at the bottom of the two volcanic lakes.

[5] http://perso.orange.fr/mhalb/nyos/index.htm

Engineered CO_2 sequestration sites can be carefully chosen and operated specifically to minimize the prospect of leakage with several degrees of redundancy, minimizing and controlling any leakage pathways for CO_2 to reach the surface. Simply put: an oilfield or deep saline formation and a volcano have very little in common when it comes to studying CO_2 releases. The Lake Nyos and Monoun incidents cannot be used as evidence against the efficacy or safety of CCS.

The Frio injection project – or "Will CO_2 eat through rock and escape to the surface"?

The Frio experiment was undertaken to answer questions such as:

- If CO_2 released from fossil fuel during energy production is returned to the subsurface, will it be retained for periods of time significant enough to benefit the atmosphere?
- Can trapping be assured in saline formations where there is no history of hydrocarbon accumulation?
- What tools can be used to monitor the movement of CO_2 in the subsurface?

The injection program was led by Susan Hovorka, a co-signatory to this letter. 1,825 tons CO_2 were injected during two injections into the Frio Formation, which underlies large areas of the United States Gulf Coast. Reservoir characterization and numerical modeling were used to design the experiment, as well as to interpret the results through history matching. Closely spaced measurements in space and time were collected to observe the fate of the CO_2 during and after injection. The Frio project collected very detailed information on what happens during injection of CO_2 into the subsurface in a brine-filled reservoir associated with an oil field in Texas over a multi-year period.

Researchers observed that, as expected, CO_2 dissolved into the brine in small spaces within the rock, making the brine more acidic (with a pH[6] of approx. 3.5 – the same acidity as California orange juice, and less acidic than carbonated beverages or vinegar). This acidic brine within a few days dissolved parts of the naturally thin iron-stained coatings on sand grains that make up the brine-filled reservoir. Again, this was not an unexpected outcome. Researchers noted as a new contribution that the composition of these minor but reactive coatings as well as the major minerals that make up the rock must be considered in order to assure protection of water quality in the case that the brine and/or the CO_2 migrate into drinking water aquifers.

Three important points stand out here:

- The CO_2 did not dissolve the surrounding rock to create leakage pathways that would allow the brine or the CO_2 to reach the surface – it dissolved only very small parts of grain *coatings*, releasing natural salts into the reservoir. Most of the rock is composed of minerals like quartz, feldspar and clay that are not at all soluble in weak acid.

- For salts to escape to the surface or contaminate groundwater, the dense salty fluids would have to migrate more than five thousand feet upward from the injection area through thick layers of clay. The most likely potential leakage path would be the retrofitted old well used for research observations, which was monitored using very sensitive tools, and which could be readily attended to and maintained if unacceptable levels of CO_2 were detected – plugging wells is a routine operation which can be carried out at a fraction of the cost of a capture and storage project. Sensitive tests at the surface have so far detected no evidence of leakage.

[6] The pH of a solution is a measure of acidity or alkalinity. Values less than 7 indicate acidity, whereas values greater than 7 indicate alkalinity.

- The dissolution of the CO_2 in the brine deep within the subsurface, which made it more acidic, is in fact a storage mechanism for the CO_2: the process of "dissolution trapping" mentioned earlier. Dissolution trapping decreases the chances of CO_2 leaking outside target formation, and increases our confidence of permanent storage. Dissolution of minerals neutralized the weak acid over a period of a week, so that the pH returned to near normal. The volume of rock is very large compared to water, which is nearly stagnant, and this also limits the ability of the water to dissolve rock.

The results in the paper published in the scientific journal *Geology*[7] emphasize that it is important that the dissolution of CO_2 into water, forming a weak acid, should be considered as part of assurance that storage will be safe and permanent. Some people have misinterpreted or misquoted the relevant statement in the *Geology* paper as an alarming new discovery; properly considered it should be taken as reinforcement that the effects of geochemical interaction of CO_2 with rock and water should be properly assessed to assure that storage is safe. In fact, such chemical reactions must be considered in order to get a permit to inject fluids underground in the US.

In summary, the CO_2 from this test is still retained where it was placed, will not escape, and appears to be already nearly immobile as a result of physical processes. This was tested by opening the injection well and measuring what was produced (nothing). Testing shows that after injection, the CO_2 spread for a short time, and then was trapped as small isolated bubbles in small pores within the rock (phase trapping, a well known physical process). The project was open to diverse researchers and to observers from all over the US and around the world. Recent opening of the wells and additional testing at the Frio site in the presence of three news organizations further verified that the CO_2 is still trapped in the injection zone. A consensus was reached by the researchers and observers that the results of the Frio test are favorable and result in increased confidence for large volume use of the subsurface for CO_2 sequestration. The Frio project therefore did not show that CO_2 will eat through rock and escape to the surface – in fact it verified the exact opposite.

Conclusion

Deployment of CCS requires thought, planning and effective regulatory controls. Adequate regulation does not currently exist. A range of issues need to be addressed in a comprehensive manner, such as site selection, monitoring, and liability. The technology does come with additional costs, which is why other options such as energy efficiency and renewables need to be deployed to the maximum. However, the severity of the climate problem calls for urgent reductions within a narrow time window. The atmosphere does not distinguish between countries or emission sources. Even if the developed world manages to reduce its emissions, China and India are currently fueling their growth mostly on fossil fuels and CCS is also needed to contribute to reducing emissions there. All effective emission reduction options need to be considered.

It is well documented that the impacts of climate change will be most severe for poor countries and communities. These impacts will be both social and economic. As the Stern report[8] pointed out, the economic impacts from climate change will hugely outweigh the costs of addressing it. With the right policies, the initial costs of transitioning to cleaner technologies can be very manageable, and the most sensitive communities shielded from undue burdens.

---

[7] **Y.K. Kharaka, D.R. Cole, S.D. Hovorka, W.D. Gunter, K.G. Knauss, and B.M. Freifeld.** "Gas-water-rock interactions in Frio Formation following CO2 injection: Implications for the storage of greenhouse gases in sedimentary basins". Geology 2006 34: 577-580

[8] **Sir Nicholas Stern.** "The Economics of Climate Change – The Stern Review", Cabinet Office, HM Treasury, October 2006. Available at: http://www.hm-treasury.gov.uk/independent_reviews/stern_review_economics_climate_change/sternreview_index.cfm

In a carbon-constrained world, pore space in geological reservoirs is a resource. CCS is not a technology of the distant future – it is available to us today, and it can be perfectly safe as we highlight above. It is time to begin a sincere exchange on how to regulate CCS effectively to provide for carefully selected, well designed and managed sites involving all stakeholders to ensure that our common goals are served. We hope that the present letter will serve as a starting point.

Sincerely,

Sally Benson, Peter Cook, Howard Herzog, Susan Hovorka, George Peridas

Dr. Sally Benson is a Professor (Research) in the Energy Resources Engineering Department in the School of Earth Sciences at Stanford University and the Executive Director of the Global Climate and Energy Project. She was a Coordinating Lead Author of the Underground Geological Storage chapter in the IPCC Special Report on Carbon Dioxide Capture and Storage. Since 1998, Dr. Benson has focused her research on geological storage of CO_2, leading a number of research programs at Lawrence Berkeley National Laboratory, including the GEO-SEQ program, LBNL's Zero Emissions Research and Technology Program (ZERT) and WestCarb's Geological Pilot Tests. At Stanford she conducts I research on multiphase flow of CO_2 in saline formations, monitoring technology and risk assessment.

Dr. Peter Cook CBE is the Chief Executive of the Co-operative Research Centre for Greenhouse Gas Technologies (CO2CRC) in Australia. He has previously served as Executive Director of the Petroleum CRC, Director of the British Geological Survey and Associate Director of the Bureau of Mineral Resources. He established the GEODISC program and subsequently CO2CRC, which is conducting one of the world's largest research and demonstration programs on carbon dioxide capture and geological storage. He was Coordinating Lead Author of the IPCC Special Report on Carbon Dioxide Capture and Storage, and is a member of Australia's Technical Committee to the Carbon Sequestration Leadership Forum.

Dr. Howard Herzog is a Principal Research Engineer at the Massachusetts Institute of Technology (MIT), where he has over 18 years experience in Carbon Capture and Sequestration research. He was a Coordinating Lead Author for the IPCC Special Report on Carbon Dioxide Capture and Storage and a co-author of the MIT study on The Future of Coal. He serves as a US delegate to the Carbon Sequestration Leadership Forum's Technical Group.

Dr. Susan Hovorka is a Senior Research Scientist at the Gulf Coast Carbon Center, Bureau of Economic Geology, Jackson School of Geosciences, at The University of Texas at Austin. She has worked on diverse topics related to water quality protection as well as reservoir characterization to enhance oil production. Her current research focuses on assessment of the cost, safety and effectiveness of subsurface geologic sequestration of CO_2 as a mechanism for reducing atmospheric greenhouse gas emissions. She is also active in facilitating exchange between applied scientists and the broader public, with a focus on pre-college students and teachers. She is in the final stages of completion of the Frio Pilot, a first US field test of storage of CO_2 in brine-filled sandstones.

Dr. George Peridas, is a Science Fellow with the Natural Resources Defense Council (NRDC), a non-profit environmental policy organization with over 1.2 million members and activists, more than 250,000 of whom are Californians. He works in NRDC's Climate Center and leads the organization's research, advocacy and education efforts in the area of carbon capture & storage. He has worked as a research engineer in solid mechanics and as a senior consultant in energy markets. He has advised the UK government's Department of Trade and Industry on the economics of carbon capture and storage.

Storing CO2 with Enhanced Oil Recovery

DOE/NETL-402/1312/02-07-08

February 7, 2008

Disclaimer

This report was prepared as an account of work sponsored by an agency of the United States Government. Neither the United States Government nor any agency thereof, nor any of their employees, makes any warranty, express or implied, or assumes any legal liability or responsibility for the accuracy, completeness, or usefulness of any information, apparatus, product, or process disclosed, or represents that its use would not infringe privately owned rights. Reference therein to any specific commercial product, process, or service by trade name, trademark, manufacturer, or otherwise does not necessarily constitute or imply its endorsement, recommendation, or favoring by the United States Government or any agency thereof. The views and opinions of authors expressed therein do not necessarily state or reflect those of the United States Government or any agency thereof.

Storing CO2 with Enhanced Oil Recovery

DOE/NETL-402/1312/02-07-08

February 7, 2008

NETL Contact:

Lisa Phares
Office of Systems, Analyses and Planning

Prepared by:
Vello Kuuskraa
Robert Ferguson
Advanced Resources International

National Energy Technology Laboratory

www.netl.doe.gov

This page intentionally left blank

Table of Contents

1.0 Introduction 1

2.0 Background 3

2.1. Key Feature of This New Report 3

2.2. Addressing Current Misconceptions Surrounding Storing CO2 with EOR 6

2.3. Report Outline 7

3.0 Evaluating the Market for Captured CO2 Emissions Offered by EOR 9

3.1. Study Methodology 9

3.2. The Domestic Oil Resource Base 9

3.3. Technically Recoverable Oil Resources Using CO2-EOR 15

3.3.1. Using CO2-EOR to Recovery "Stranded" Oil 15

3.3.2. Current CO2-EOR Activity and Production 17

3.3.3. Evolution in CO2 Flooding Practices 20

3.3.4. Technically Recoverable Resources 25

3.4. Economically Recoverable Resources 28

3.4.1. Perspective on CO2-EOR Economics 28

3.4.2. Economically Recoverable Resources: Base Case 29

3.4.3. Economically Recoverable Resources: Sensitivity Cases 29

4.0 The Market for Storing CO2 with EOR 34

4.1. The CO2 Injection and Storage Process 34

4.2. Producing "Carbon Free" Domestic Oil 35

4.3. The Market for CO2 35

4.4. Market Demand for CO2: Power Plant Perspective 39

5.0 Using Sale of Captured CO2 Emission for "Early Market Entry" of CCS Technology 48

5.1. Economics of CCS 48

5.2. Supporting "Early Market Entry" of CCS Technology 50

5.3. Adding "Learning" to the "Early Market Entry" Opportunity 53

Appendix A Study Methodology

Appendix B Incorporation of Economically Feasible CO2 Demand for EOR into the CarBen Model and the Electricity Market Module

Appendix C "Next Generation" CO2-EOR

List of Figures

Figure 1.	U.S. Basins/Regions Studied For Future CO2 Storage and Enhanced Oil Recovery	5
Figure 2.	The Domestic Oil Resource Base	10
Figure 3.	One-Dimensional Schematic Showing the CO2 Miscible Process.	16
Figure 4.	U.S. CO2-EOR Activity	18
Figure 5.	Growth of CO2-EOR Production in the U.S.	19
Figure 6A.	Science Behind Volume of CO2 Injection and Oil Recovery Efficiency: General Theory	21
Figure 6B.	Science Behind Volume of CO2 Injection and Oil Recovery Efficiency: Actual Practice	22
Figure 7.	Overcoming the Effects of Geologic Complexity on CO2-EOR Performance	23
Figure 8.	Evolution of "Industry Standard" for Volume CO2 Injection ("Slug Size")	24
Figure 6.	Economically Recoverable Domestic Oil Resources from CO2-EOR	32
Figure 7.	NEMS Electricity Market Module	40
Figure 8.	Advanced Coal Plants w/CCS Are Currently Uncompetitive in 2012 and 2020 (EIA's AEO 2008 Reference Case)	49
Figure 9.	Sale of Captured CO2 Emissions Can Help Make Coal Plants w/CCS Competitive	52
Figure 10.	Sale of Captured CO2 Emissions Can Help Make Coal Plants w/CCS Competitive.	55

List of Tables

Table 1.	National In-Place, Conventionally Recoverable and "Stranded" Crude Oil Resources	12
Table 2.	Comparison of National and Data Base Domestic Oil Resource Base	13
Table 3.	Major Oil Reservoirs Screened as Favorable for CO2-EOR	14
Table 4.	Technically Recoverable Resources from Applying "State-of-the-Art" CO2-EOR: Data Base and National Totals	26
Table 5.	Technically Recoverable Resources from Applying "State-of-the-Art" CO2-EOR: National Totals	27
Table 6.	Illustrative Costs and Economics of a CO2-EOR Project	28
Table 7.	Economically Recoverable Resources from Applying "State-of-the-Art" CO2-EOR: National Totals at Base Case Economics*	30
Table 8.	Economically Recoverable Resources from Applying "State-of-the-Art" CO2-EOR: National Totals at Base Case and Alternative Oil Prices/CO2 Costs	31
Table 9.	Economically Feasible Market for CO2 for CO2-EOR: Base Case* (Eleven Basins/Areas)	37
Table 10.	Economically Feasible Market Demand for CO2 by CO2-EOR: Alternative Cases (Eleven Basins/Areas)	38
Table 11.	Economically Feasible Market Demand for CO2 by EOR: NEMS/EMM Power Generation Regions	41
Table 12.	Simplified Crosswalk Between the EMM Regions and States	42
Table 13.	Economically Feasible Market Demand for CO2 by EOR: NEMS/EMM Power Generation Regions	44
Table 14.	Existing CO2 Supplies	45
Table 15.	Comparison of Net CO2 Demand (for EOR) with Potential Captured CO2 Emissions from Coal-Fueled Power Plants	47
Table 16.	Relationship of CO2 Sales Price to Cost Offsets in the Coal-Fueled Power Sector (Year 2020)	50
Table 17.	EIA Reference Case Year 2012 and Year 2020 Costs of Electricity	50
Table 18.	Cost of Electricity in Year 2020 with Sale of CO2	51
Table 19.	Year 2020 Costs of Electricity with Accelerated "Learning" Based Cost Reductions	53
Table 20.	Year 2020 Cost of Electricity with "Learning" and CO2 Sale Offset	54

Storing CO2 with Enhanced Oil Recovery

1.0 Introduction

CO2 enhanced oil recovery (CO2-EOR) offers the potential for storing significant volumes of carbon dioxide emissions while increasing domestic oil production. Four notable benefits would accrue from integrating CO2 storage and enhanced oil recovery:

- First, CO2-EOR provides a large, "value added" market for sale of CO2 emissions captured from new coal-fueled power plants. The size of this market is on the order of 7,500 million metric tons between now and 2030. Sales of captured CO2 emissions would help defray some of the costs of installing and operating carbon capture and storage (CCS) technology. These CO2 sales would support "early market entry" of up to 49 (one GW size) installations of CCS technology in the coal-fueled power sector;

- Second, storing CO2 with EOR helps bypass two of today's most serious barriers to using geological storage of CO2 - - establishing mineral (pore space) rights and assigning long-term liability for the injected CO2;

- Third, the oil produced with injection of captured CO2 emissions is 70% "carbon-free", after accounting for the difference between the carbon content in the incremental oil produced by EOR and the volume of CO2 stored in the reservoir . With "next generation" CO2 storage technology and a value for storing CO2, the oil produced by EOR could be 100+% "carbon free";

- Fourth, the 39 to 48 billion barrels of economically recoverable domestic oil economically recoverable from storing CO2 with EOR would help displace imports, supporting a path toward energy independence. It could also help build pipeline infrastructure subsequently usable for storing CO2 in saline formations.

The purpose of this report, which updates and adds to a previously issued series of “basin studies”, is to examine and further quantify the benefits of integrating CO2 storage with enhanced oil recovery. The report also updates the size of the CO2 market available from EOR and how this market could support “early market entry” of CCS technology in the coal-fueled electric power sector.

2.0 Background

2.1. Key Feature of This New Report

In 2004 and 2005, Advanced Resources International, with sponsorship by the U.S. Department of Energy's Office of Fossil Energy, issued a series of ten "basin reports".* These reports examined the domestic CO2 storage and oil recovery potential offered by expanded development and application of CO2-EOR technology. This report entitled, "Storing CO2 with Enhanced Oil Recovery", provides a major update to this past set of data and information. For example, the initial chapter of the report which serves to quantify the size of the CO2 market offered by EOR, contains the following new features:

- A significant number, nearly 500, new oil reservoirs have been added to the data base, including oil reservoirs in the Appalachian Basin. The assessment now includes 2,012 oil reservoirs accounting for nearly three-quarters of the U.S. oil resource base in 27 states, Figure 1. These new oil reservoirs were made available for this study from Advanced Resources proprietary data base;

- Improvements and updates have been made to the well spacing and CO2 injection portions of the model. Oil field cost data have been updated and indexed to year 2006-2007. These updates and improvements are based on internal work undertaken by Advanced Resources; and

- An expanded set of oil prices and a revised oil price/CO2 cost relationship have been incorporated into the economic analyses, as presented later in this report.

---

* The Advanced Resources completed series of ten "basin studies" were the first to comprehensively address CO2 storage capacity from combining CO2 storage and CO2-EOR. These ten "basin studies" covered 22 of the oil producing states plus offshore Louisiana and included 1,581 large (>50 MMBbls OOIP) oil reservoirs, accounting for two thirds of U.S. oil production. These reports are available on the U.S. Department of Energy's web site at: http://www.fe.doe.gov/programs/oilgas/eor/Ten_Basin-Oriented_CO2-EOR_Assessments.html.

The later chapters of this report examine how much of the CO2 emissions captured by the power and industrial sectors could be sold to the EOR industry and how the sale of these captured CO2 emissions would support the “early market entry” of new coal-fueled power plants equipped with CO2 capture technologies.

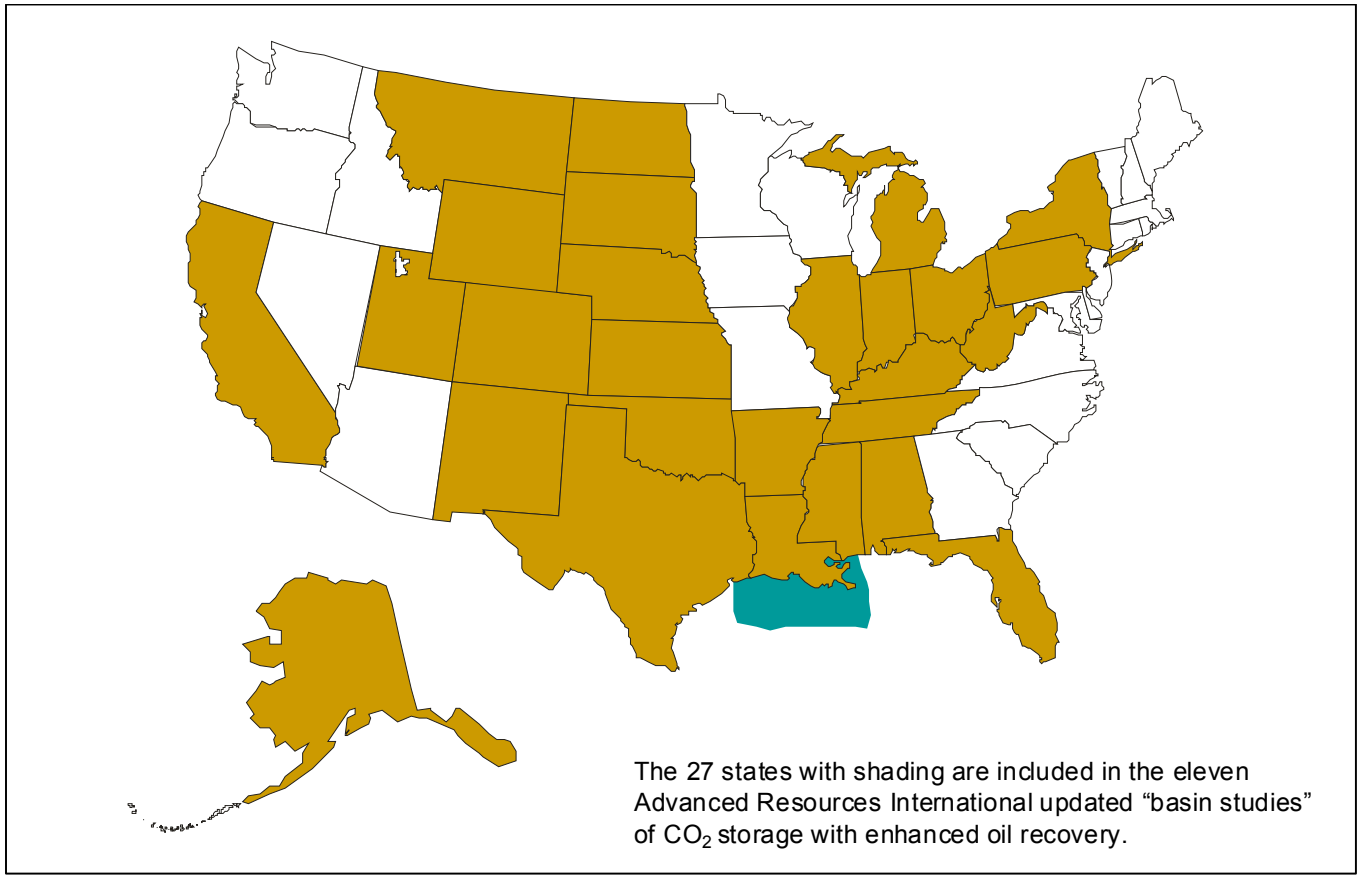

JAF02709.PPT

Figure 1. U.S. Basins/Regions Studied For Future CO2 Storage and Enhanced Oil Recovery

2.2. Addressing Current Misconceptions Surrounding Storing CO2 with EOR

Various analysts and studies have discussed the potential for storing CO2 with enhanced oil recovery but have noted (incorrectly) that this option is quite small or is counter productive to reducing CO2 emissions. For example, the "IPCC Special Report on Carbon Dioxide Capture and Storage", while recognizing that depleted oil fields could provide an attractive, early option for storing CO2 (particularly with CO2-EOR), concluded that oil fields would provide only a relatively small volume of CO2 storage capacity. The report states:

> *"Enhanced oil recovery operations have the lowest capacity of all forms of CO2 geologic storage, estimated globally at 61 to 123 billion tons of CO2 . . . it is important to note that CO2 EOR, as practiced today, is not engineered to maximize CO2 storage. In fact, it is optimized to maximize revenues from oil production, which in many cases requires minimizing the amount of CO2 retained in the reservoir. In the future, if storing CO2 has an economic value, co-optimizing CO2 storage and EOR may increase capacity estimates."*

In a similar vein, the website Climate Progress contains the headline - - "Rule Four of Offsets: No Enhanced Oil Recovery". The website continues by stating:

> *"Capturing CO2 and injecting it into a well to squeeze more oil out of the ground is not real carbon sequestration. . . .CO2 used for enhanced oil recovery (EOR) does not reduce net carbon emissions and should not be sold to the public as a carbon offset."*

Finally, the ERS/IEA Report: "Carbon Dioxide Capture and Storage in the Clean Development Mechanism (CDM)" sets forth two assumptions that shape the report's view of storing CO2 with EOR:

- As CO2-EOR projects reach the end of their life, greater volumes of CO2 will be produced (and emitted); and

- CO2-EOR projects will result in increased carbon emissions from incremental oil production above a No Further Activity (NFA) baseline.

The ERS/IEA report continues by stating that, to be acceptable, a CO2-EOR project would need to provide a full carbon balance across the whole life cycle of the project, including emissions from combustion of the incremental oil produced. The ERS/IEA report recommends that for acceptance by CDM, CO2-EOR would need to demonstrate net emission reductions.

One of the additional purposes of this new report is to address, and hopefully dispel, some of the misconceptions that have arisen around the topic of storing CO2 with enhanced oil recovery by showing that: (1) for the U.S. (and by extension for the world), the CO2 storage capacity offered by CO2-EOR is large, and when innovatively engineered, can be larger still; (2) essentially all the purchased CO2 is reinjected and thus stored in the original (or an adjacent) oil reservoir; and (3) the incremental oil produced is 70% "carbon free", creating net emission reductions - - and thus additionality - - by displacing conventionally produced oil imports that are 0% "carbon free" or corn-based ethanol, that is only 10 to 15% "carbon free" (and a net contributor of CO2 emissions when coal is used as the process fuel).

2.3. Report Outline

The report begins with a summary presentation of three topics central to establishing the market for CO2 offered by EOR - - what is the size and nature of the domestic oil resource base; how much of this resource base is applicable to and can be recovered with CO2-EOR; and, what portion of this technically recoverable resource would be economic at alternative oil prices and CO2 costs?

The report then examines the market opportunity for selling captured CO2 emissions to the EOR industry and storing these emissions in oil reservoirs using CO2-EOR, giving particular attention to the capture and productive use of CO2 emissions from the nation's large and growing fleet of coal-fueled power plants.

A series of appendices provide supporting data and technical information for the analytical results discussed in the main report. Additional discussion of key topics such as the oil recovery and cost models and the data bases used in the analyses are available in the previously published set of ten “basin studies” and thus are not repeated in this updated report. The previously prepared “basin study” reports can be accessed at http://www.fe.doe.gov/programs/oilgas/publications/.

3.0 Evaluating the Market for Captured CO2 Emissions Offered by EOR

The size and value of the market for captured CO2 emissions offered by enhanced oil recovery rests on three pillars: (1) the size and nature of the domestic crude oil resource base, particularly the large portion of this resource base unrecoverable with existing primary and secondary oil recovery methods; (2) the ability of CO2-EOR to recovery a portion of this currently unrecoverable ("stranded") domestic oil, while efficiently storing CO2; and (3) the impact of alternative oil prices and CO2 costs on the volume of oil that could be economically produced. These three topics are examined, in brief, in this section of the report.

3.1. Study Methodology

A six part methodology was used to assess the CO2 storage and EOR potential of domestic oil reservoirs. The six steps were: (1) assembling the Major Oil Reservoirs Data Base; (2) calculating the minimum miscibility pressure; (3) screening reservoirs for CO2-EOR; (4) calculating oil recovery; (5) assembling the cost and economic model; and, (6) performing economic and sensitivity analyses.

Appendix A provides additional detail on the methodology used in this study.

3.2. The Domestic Oil Resource Base

The U.S. has a large, established oil resource base, on the order of 596 billion barrels originally in-place. About one-third of this resource base, nearly 196 billion barrels, has been recovered or placed into proved reserves with existing primary and secondary oil recovery technologies. This leaves behind a massive target of 400 billion barrels of "technically stranded" oil, Figure 2*.

---

* When less established domestic oil resources, such as undiscovered oil, tar sands, and oil trapped in residual oil zones are included, the "stranded" oil resource approaches 1,000 billion barrels. For further information on this topic see Chapter 3 (pages 183 and 184) of the recently issued National Petroleum Council report "Hard Truths, Facing the Hard Truths about Energy" July, 2007, http://www.npchardtruthsreport.org/

Large Volumes Of Domestic Oil Remain "Stranded" After Traditional Primary/Secondary Oil Recovery

Original Oil In-Place: 596 B Barrels*

"Stranded" Oil In-Place: 400 B Barrels*

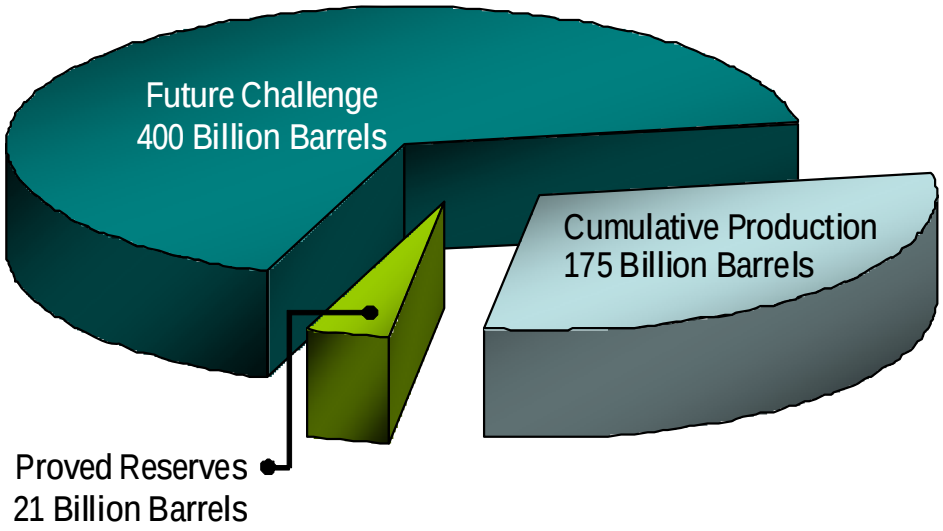

*Excludes deep-water GOM.
Source: Advanced Resources International (2008)

JAF02709.PPT

Figure 2. The Domestic Oil Resource Base

Table 1 provides a tabulation of the national in-place, conventionally recoverable and “stranded” oil in the eleven “basins” addressed by this study. The table shows that much of the “stranded” oil resides in East and Central Texas (74 billion barrels), the Mid-Continent (66 billion barrels), and the Permian Basin of West Texas and New Mexico (62 billion barrels). California, Alaska, the Gulf Coast and the Rockies also have significant volumes of “stranded” oil.

The Advanced Resources’ Major Oil Reservoirs Data Base of 2,012 distinct oil reservoirs contains 74% (437.8 billion barrels of OOIP out of the national total of 595.7 billion barrels of OOIP), of the domestic oil resource, Table 2.

The data base coverage for individual basins/areas ranges from 59% for the Mid-Continent to 97% for Alaska. As such, the Major Oil Reservoir Data Base provides a robust foundation for estimating the national oil recovery potential from CO2-EOR.

Not all of the domestic oil resource is technically amenable to CO2-EOR. Favorable reservoir properties for CO2-EOR include sufficiently deep formations with lighter (higher gravity) oil favorable for miscible CO2-EOR. A portion of the shallower oil reservoirs with heavier (lower gravity) oil may be amenable to immiscible CO2-EOR.

Table 3 provides a basin/area level tabulation of the 2,012 reservoirs in the Major Oil Reservoirs Data Base, showing that only 1,111 reservoirs (containing 319 billion barrels of OOIP) screened as being amenable to miscible and immiscible CO2-EOR. More than half of the oil reservoirs in California, particularly the shallower heavy oil fields, are screened as unfavorable for CO2-EOR while the great bulk (over 80%) of the geologically favorable oil reservoirs in the Permian Basin are screened as favorable for CO2-EOR.

Table 1. National In-Place, Conventionally Recoverable and "Stranded" Crude Oil Resources

Basin/Area	OOIP* (Billion Barrels)	Conventionally Recoverable (Billion Barrels)	ROIP** "Stranded" (Billion Barrels)
1. Alaska	67.3	22.3	45.0
2. California	83.3	26.0	57.3
3. Gulf Coast (AL, FL, MS, LA)	44.4	16.9	27.5
4. Mid-Continent (OK, AR, KS, NE)	89.6	24.0	65.6
5. Illinois/Michigan	17.8	6.3	11.5
6. Permian (W TX, NM)	95.4	33.7	61.7
7. Rockies (CO,UT,WY)	33.6	11.0	22.6
8. Texas, East/Central	109.0	35.4	73.6
9. Williston (MT, ND, SD)	13.2	3.8	9.4
10. Louisiana Offshore	28.1	12.4	15.7
11. Appalachia (WV, OH, KY, PA)	14.0	3.9	10.1
Total	595.7	195.7	400.0

*Original Oil in Place, in all reservoirs in basin/area;
** Remaining Oil in Place, in all reservoirs in basin/area.
Source: Advanced Resources Int'l, 2008.

Table 2. Comparison of National and Data Base Domestic Oil Resource Base

Basin/Area	National OOIP* (Billion Barrels)	Data Base OOIP* (Billion Barrels)	Data Base Coverage (%)
1. Alaska	67.3	65.4	97
2. California	83.3	75.2	90
3. Gulf Coast (AL, FL, MS, LA)	44.4	26.4	60
4. Mid-Continent (OK, AR, KS, NE)	89.6	53.1	59
5. Illinois/Michigan	17.8	12.0	67
6. Permian (W TX, NM)	95.4	72.4	76
7. Rockies (CO,UT,WY)	33.6	23.7	70
8. Texas, East/Central	109.0	67.4	62
9. Williston (MT, ND, SD)	13.2	9.4	71
10. Louisiana Offshore	28.1	22.2	79
11. Appalachia (WV, OH, KY, PA)	14.0	10.6	76
Total	595.7	437.8	74

*Original Oil In-Place, in all reservoirs in basin/area;
Source: Advanced Resources Int'l, 2008.

Table 3. Major Oil Reservoirs Screened as Favorable for CO2-EOR

Basin/Area	Major Oil Reservoirs Data Base	
	# of Total Reservoirs	# Favorable For CO2-EOR
1. Alaska	42	32
2. California	187	86
3. Gulf Coast (AL,FL, MS, LA)	298	155
4. Mid-Continent (OK, AR, KS, NE)	246	102
5. Illinois/Michigan	172	72
6. Permian (W TX, NM)	228	190
7. Rockies (CO,UT,WY)	187	92
8. Texas, East/Central	213	161
9. Williston (MT, ND, SD)	95	54
10. Louisiana Offshore	156	99
11. Appalachia (WV, OH, KY, PA)	188	68
Total	2,012	1,111

3.3. Technically Recoverable Oil Resources Using CO2-EOR

3.3.1. Using CO2-EOR to Recovery "Stranded" Oil

Numerous scientific as well as practical reasons account for the large volume of "stranded" oil, unrecoverable with primary and secondary methods. These include: oil that is bypassed due to poor waterflood sweep efficiency; oil that is physically unconnected to a wellbore; and, most importantly, oil that is trapped by viscous, capillary and interfacial tension forces as residual oil in the pore space.

Injection of CO2 helps lower the oil viscosity and trapping forces in the reservoir. Additional well drilling and pattern realignment for the EOR project helps contact bypassed and occluded oil. These actions enable a portion of this "stranded oil" to become mobile, connected to a wellbore and thus recoverable.

Miscible CO2-EOR is a multiple contact process involving interactions between the injected CO2 and the reservoir's oil. During this multiple contact process, CO2 vaporizes the lighter oil fractions into the injected CO2 phase and CO2 condenses into the reservoir's oil phase. This leads to two reservoir fluids that become miscible (mixing in all parts), with favorable properties of low viscosity, enhanced mobility and low interfacial tension.

The primary objective of miscible CO2-EOR is to remobilize and dramatically reduce the after-waterflooding residual oil saturation in the reservoir's pore space. Figure 3 provides a one-dimensional schematic showing the various fluid phases existing in the reservoir and the dynamics of the CO2 miscible process.

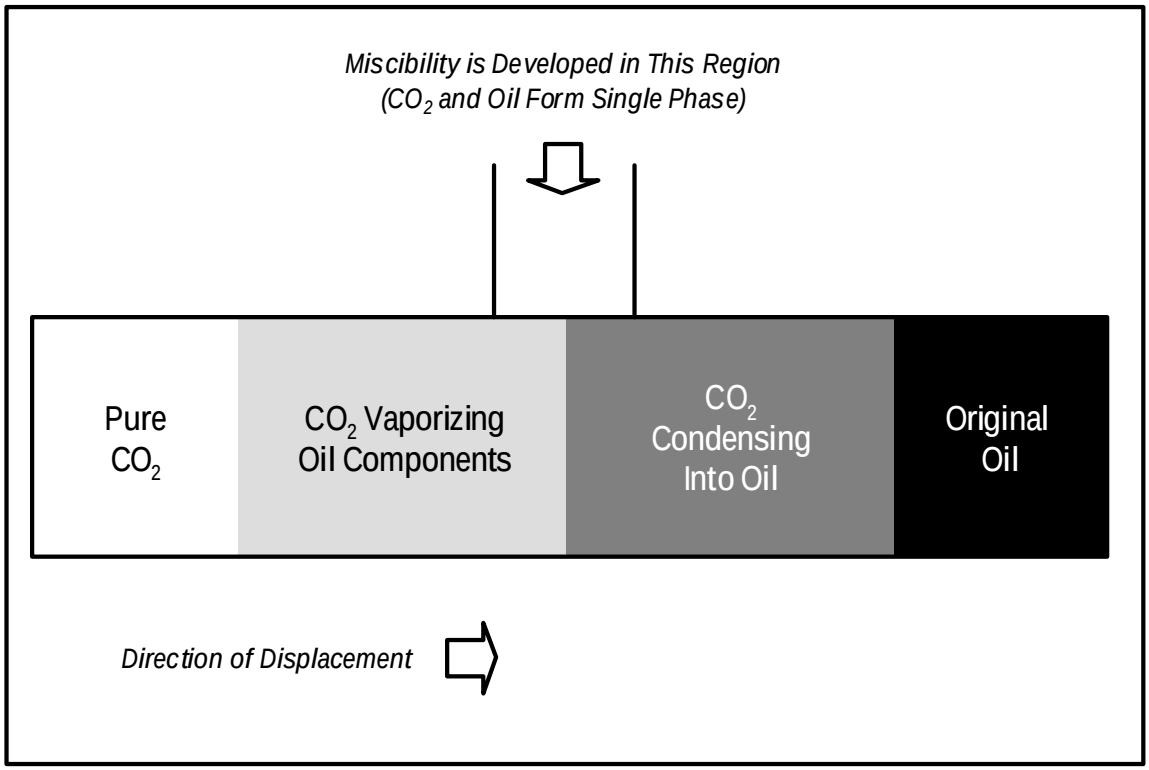

JAF02709.PPT

Figure 3. One-Dimensional Schematic Showing the CO2 Miscible Process.

3.3.2. Current CO2-EOR Activity and Production

According to the latest tabulation of CO2-EOR activity in the U.S., the 2006 EOR Survey published by the Oil and Gas Journal, approximately 237 thousand barrels per day of incremental domestic oil is being produced by 86 CO2-EOR projects, distributed broadly across the U.S.

Figure 4 provides the location of the currently active 86 CO2-EOR projects, noting their CO2 supply sources. Figure 5 tracks the steady growth in CO2-EOR production for the past 20 years, noting that although new activities are underway in the Gulf Coast and the Rockies, the great bulk of CO2-EOR is still being produced from the Permian Basin.

Given the significant number of new and expanded CO2-EOR projects launched in 2006 and 2007, we anticipate that the next EOR Survey, due to be published in the spring of 2008, will show substantial increases in domestic CO2-EOR activity and oil production.

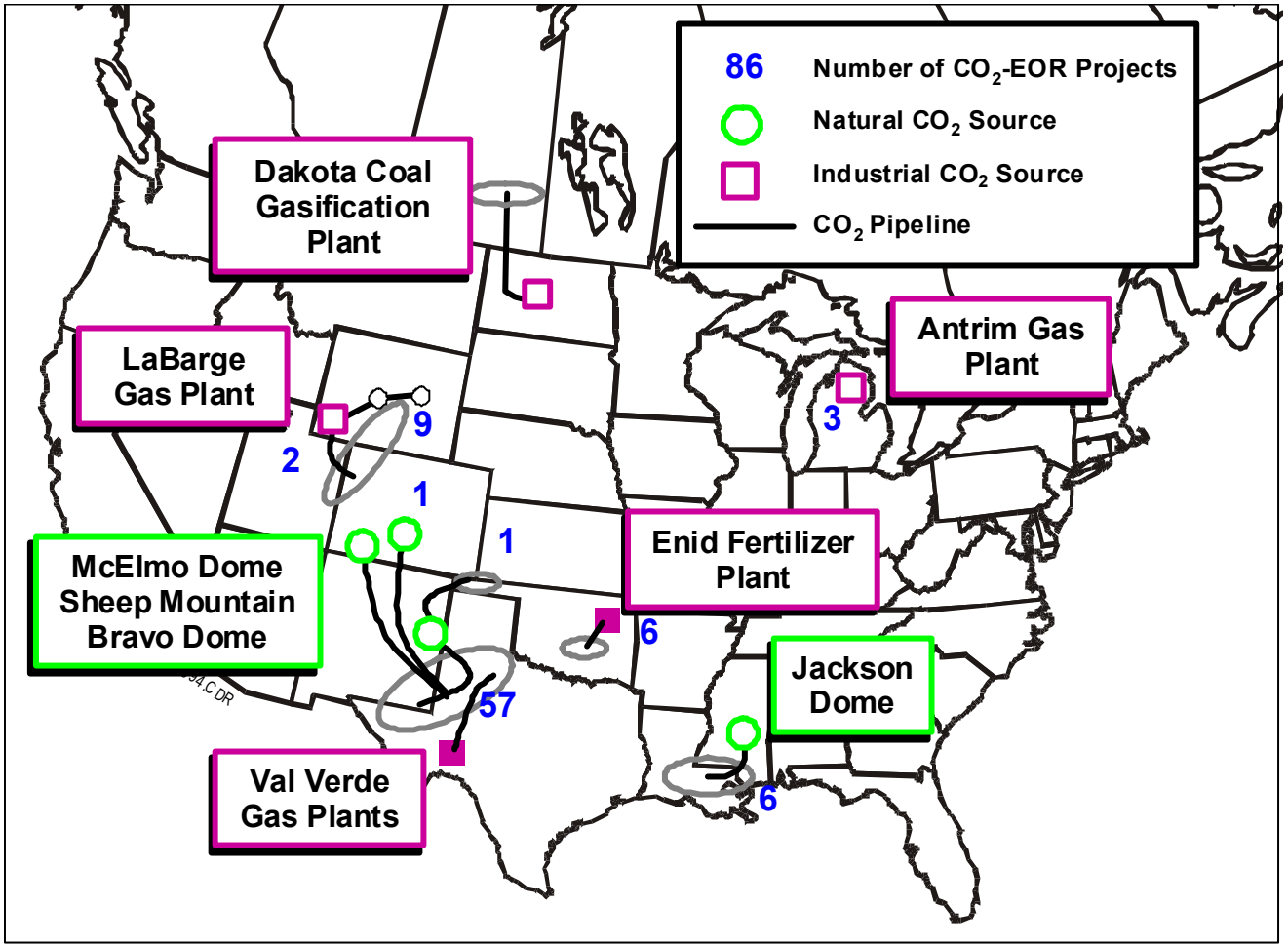

JAF02709.PPT

Figure 4. U.S. CO2-EOR Activity

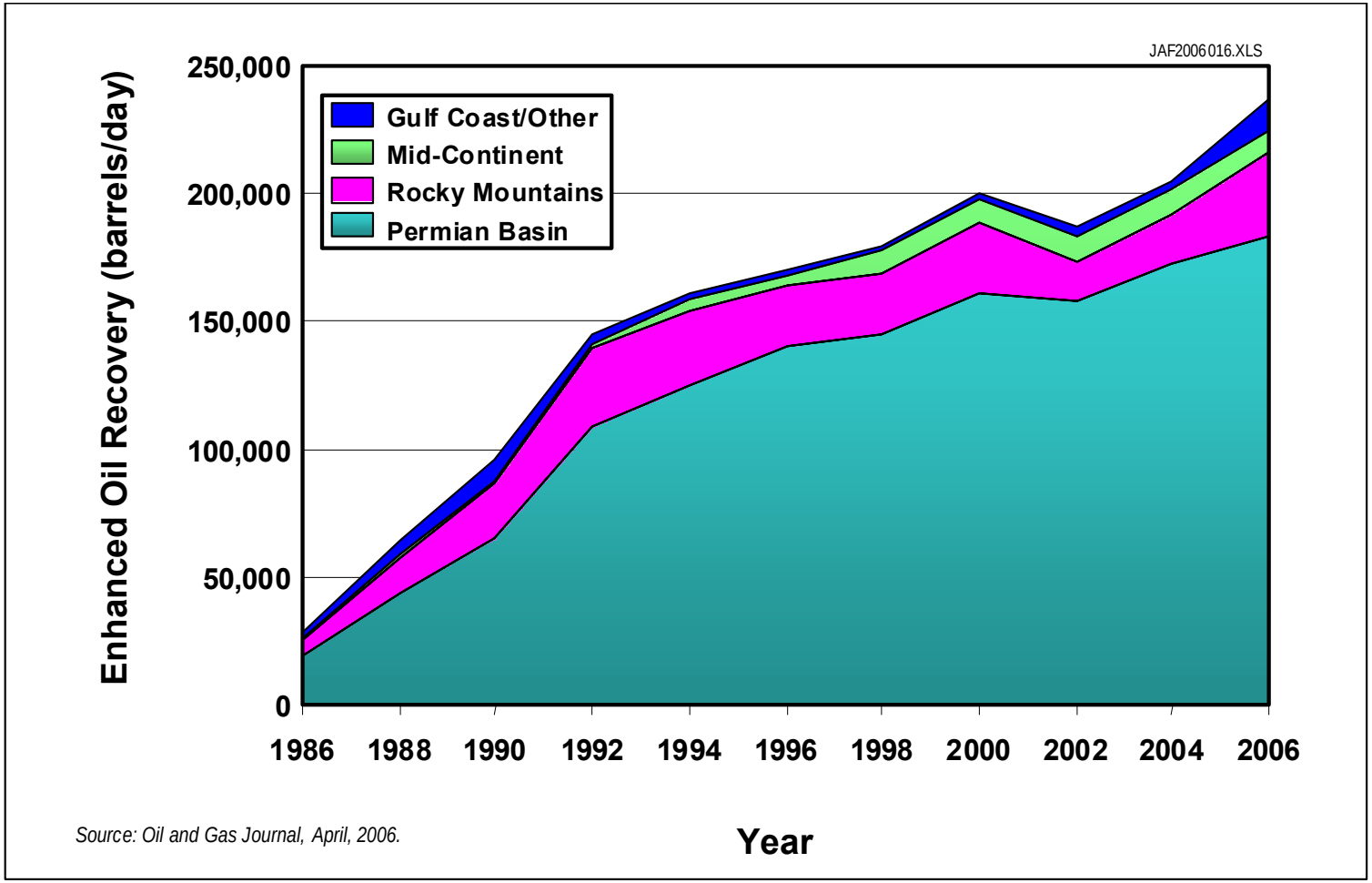

JAF02709.PPT

Figure 5. Growth of CO2-EOR Production in the U.S.

3.3.3. Evolution in CO2 Flooding Practices

Considerable evolution has occurred in the design and implementation of CO2-EOR technology since it was first introduced. Notable changes include: (1) use of much larger (up to 1 HCPV) volumes of CO2; (2) incorporation of tapered WAG (water alternating with gas) and other methods for mobility control; and (3) application of advanced well drilling and completion strategies to better contact previously bypassed oil. As a result, the oil recovery efficiencies of today's better designed "state-of-the-art" CO2-EOR projects have steadily improved.

Two key assumptions underlie the oil recovery performance calculated for this study by the ARI/PROPHET model (see Appendix A) for "state-of-the-art" CO2-EOR:

- First is the injection of much larger volumes of CO2 (1 HCPV), rather than the smaller (0.4 HCPV) volumes used in the past;
- Second are the rigorous CO2-EOR monitoring, management and, where required, remediation activities that help assure that the larger volumes of injected CO2 contact more of the reservoir's pore volume and residual oil rather than merely channel through high permeability streaks in the reservoir.

In addition to these two central assumptions, the calculated oil recovery in the ARI/PROPHET model assumes appropriate well spacing (including the drilling of new infill wells), the use of a tapered WAG process, the maintenance of miscibility pressure throughout the reservoir, and the reinjection of CO2 produced with oil.

Figures 6A and 6B provide the scientific and practical basis for using larger volumes of CO2 injection. Figure 7 illustrates how rigorous monitoring and well remediation can be used to target injected CO2 to reservoir strata with high remaining oil saturation, helping reduce ineffective CO2 channeling.

Figure 8, using information from Occidental Petroleum (Oxy Permian), provides a 17 year snapshot of the evolution of the "industry standard" for the most effective volume of CO2 injection (the optimum "slug size").

Petroleum engineering science confirms that using increased volumes of CO_2 leads to increased reservoir sweep efficiency.

Sweep Efficiency in Miscible Flooding

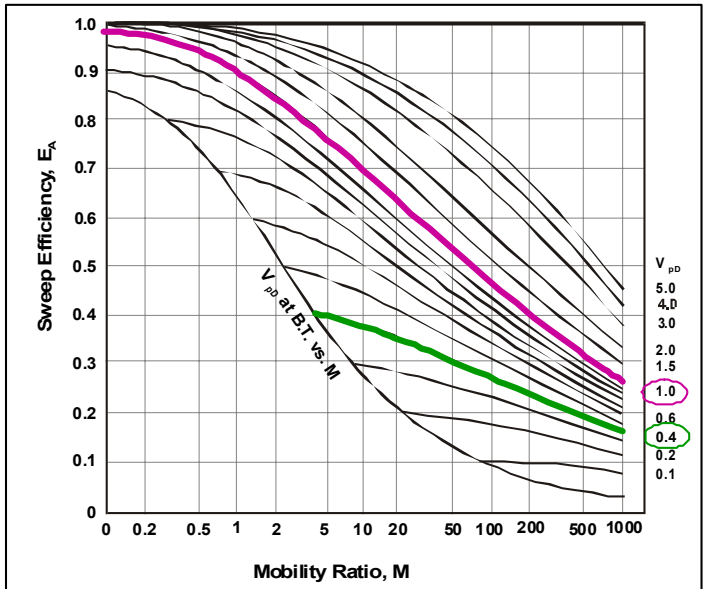

Note: V_{pD} is displaceable fluid pore volumes of CO_2 injected.

Source: Claridge, E.L., "Prediction of Recovery in Unstable Miscible Displacement", SPE (April 1972).

Oil Recovery Efficiency vs. CO_2 Injection

Injected CO_2 (HCPV)	Sweep Efficiency (RPV)	Incremental Sweep Efficiency (%)
0.40	0.345	
0.60	0.440	+28%
0.80	0.515	+49%
1.00	0.570	+65%

Source: After Claridge (April 1972) (Mobility Ratio of 25)

JAF02709.PPT

Figure 6A. Science Behind Volume of CO2 Injection and Oil Recovery Efficiency: General Theory

Effect of Solvent Bank Size on Oil Recovery

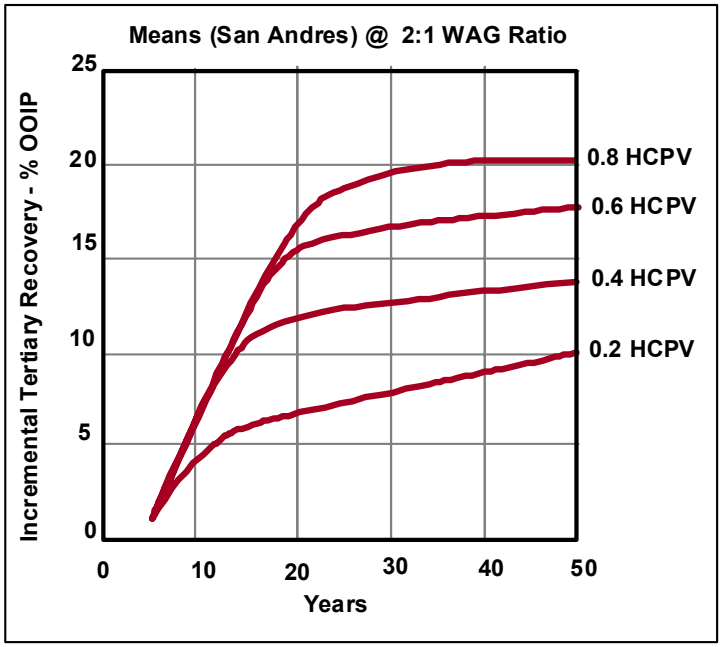

Source: SPE 24928 (1992)

The CO_2-EOR WAG project at Means (San Andres Unit) was implemented as part of an integrated reservoir development plan and involve the drilling of 205 new producers and 158 new injectors.

Initial objective was to inject 260 Bcf of CO_2, equal to 55% HCPV, (0.4 HCPV purchased; 0.15 HCPV recycled) at a 2:1 WAG ratio.

Latest objective is to inject 480 Bcf (~1 HCPV) of CO_2.

JAF02709.PPT

Figure 6B. Science Behind Volume of CO2 Injection and Oil Recovery Efficiency: Actual Practice

Rigorous monitoring and well remediation can be used to help target injected CO_2 to reservoir strata with high residual oil saturation.

- Higher oil saturation portion of reservoir is inefficiently swept.
- CO_2 channeling reduced with well workover.

Relative Location of the CO2/Water Front

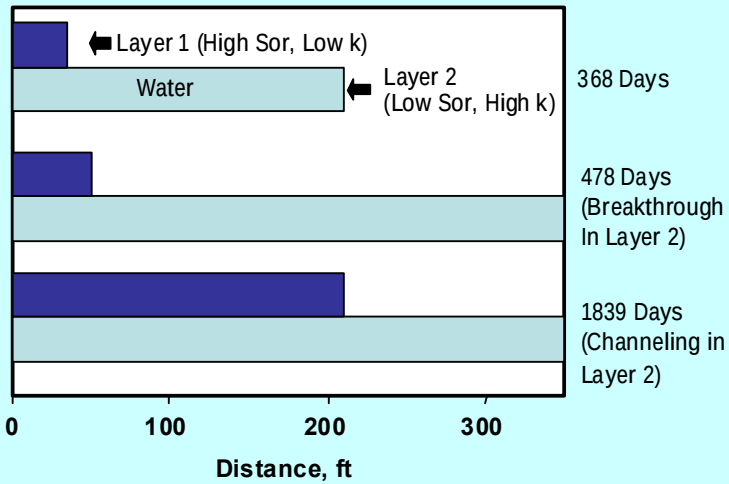

Source: Adapted by Advanced Resources Int'l from "Enhanced Oil Recovery", D.W. Green and G. P. Willhite, SPE, 1998.

Well 27-6 Injection Profile

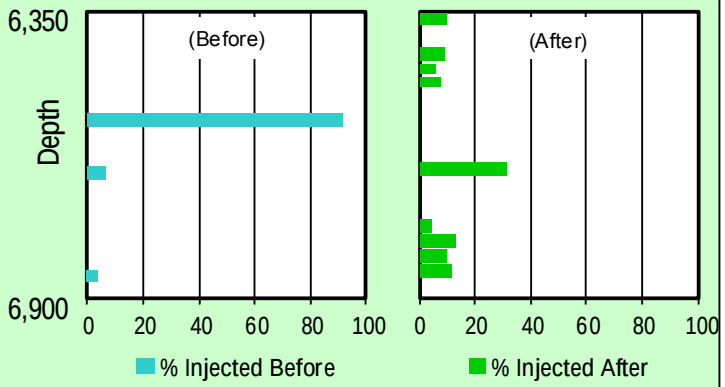

Source: "SACROC Unit CO_2 Flood: Multidisciplinary Team Improves Reservoir Management and Decreases Operating Costs", J.T. Hawkins, et al., SPE Reservoir Engineering, August 1996.

JAF02709.PPT

Figure 7. Overcoming the Effects of Geologic Complexity on CO2-EOR Performance

Eastern Denver Unit (Wasson Oil Field) CO_2-EOR Project	Started
Start of CO_2 injection in EDU with 40% slug size	1984
EDU WAG & start off CO_2 injection in WAC, FIA, B8 FIA	1989
Non performing FIA patterns stopped (~20% slug size)	1992
EDU 40% to 60% CO_2 slug size increase approved	1994
EDU 60% to 80% CO_2 slug size increase approved	1996
EDU 80% to 100% CO_2 slug size increase approved	2001

Source: OXY Permian 2006

Occidental Petroleum (Oxy Permian) is the industry leader for CO2-EOR, in terms of number of large projects, volume of CO_2 used, and volumes of oil production.

JAF02709.PPT

Figure 8. Evolution of "Industry Standard" for Volume CO2 Injection ("Slug Size")

The oil recovery calculations contained in this study rely on these “state-of-the-art” practices. As such, the calculated oil recovery efficiencies expected from CO2-EOR are somewhat higher than have been achieved by older CO2-EOR projects. However, they are representative of the “best practices” being employed by technically sophisticated operations and current CO2-EOR projects.

3.3.4. Technically Recoverable Resources

Our reservoir-by-reservoir assessment of the 1,111 large oil reservoirs amenable to CO2-EOR shows that a significant volume, 64 billion barrels, of domestic oil may be recoverable with state-of-the-art application of CO2-EOR. Extrapolating the data base to national-level results indicates that 87.1 billion barrels of domestic oil may become recoverable by applying “state-of-the-art” CO2-EOR, Table 4.

Subtracting the 2.3 billion barrels of oil that has already been produced and proven by CO2-EOR (as of 2004), the application of CO2-EOR would add 84.8 billion barrels of incremental domestic oil supplies, Table 5. For perspective, the current domestic proved crude oil reserves are 21 billion barrels, as of the end of 2006.

Not surprisingly, the Permian Basin of West Texas and New Mexico tops the list with its world class size, favorable geology and carbonate reservoirs. In addition, significant technically recoverable resource potential also exists in East and Central Texas, Alaska and the Mid-Continent as well as the Gulf Coast, California and the Louisiana offshore.

Table 4. Technically Recoverable Resources from Applying "State-of-the-Art" CO2-EOR: Data Base and National Totals

Basin/Area	DATA BASE			NATIONAL	
	OOIP (Billion Barrels)	OOIP Favorable for CO2-EOR (Billion Barrels)	Technically Recoverable (Billion Barrels)	OOIP (Billion Barrels)	Technically Recoverable (Billion Barrels)
1. Alaska	65.4	64.5	12.0	67.3	12.4
2. California	75.2	31.6	5.7	83.3	6.3
3. Gulf Coast (AL, FL, MS, LA)	26.4	20.2	4.2	44.4	7.0
4. Mid-Continent (OK, AR, KS, NE)	53.1	28	6.4	89.6	10.7
5. Illinois/Michigan	12.0	4.6	0.8	17.8	1.2
6. Permian (W TX, NM)	72.4	63.1	13.5	95.4	17.8
7. Rockies (CO,UT,WY)	23.7	18.0	2.9	33.6	4.2
8. Texas, East/Central	67.4	52.4	10.9	109.0	17.6
9. Williston (MT, ND, SD)	9.4	7.2	1.8	13.2	2.5
10. Louisiana Offshore	22.2	22.1	4.6	28.1	5.8
11. Appalachia (WV, OH, KY, PA)	10.6	7.4	1.2	14.0	1.6
Total	437.8	319.1	64	595.7	87.1

Table 5. Technically Recoverable Resources from Applying "State-of-the-Art" CO2-EOR: National Totals

	Technically Recoverable (Billion Barrels)	Existing CO2-EOR Production/ Reserves	Incremental Technically Recoverable (Billion Barrels)
1. Alaska	12.4	-	12.4
2. California	6.3	-	6.3
3. Gulf Coast (AL, FL, MS, LA)	7	*	7
4. Mid-Continent (OK, AR, KS, NE)	10.7	-0.1	10.6
5. Illinois/Michigan	1.2	-	1.2
6. Permian (W TX, NM)	17.8	-1.9	15.9
7. Rockies (CO,UT,WY)	4.2	-0.3	3.9
8. Texas, East/Central	17.6	-	17.6
9. Williston (MT, ND, SD)	2.5	-	2.5
10. Louisiana Offshore	5.8	-	5.8
11. Appalachia (WV, OH, KY, PA)	1.6	-	1.6
Total	87.1	-2.3	84.8

3.4. Economically Recoverable Resources

3.4.1. Perspective on CO2-EOR Economics

Conducting a CO2-EOR project is capital intensive and costly, entailing the drilling and/or reworking of wells, installing a CO2 recycle plant, and constructing CO2 gathering and transportation pipelines. However, in general, the single largest cost of the project is the purchase of CO2. As such, operators strive to optimize and reduce its purchase and injection, where possible.

The recent increases in domestic oil prices have significantly improved the economics outlook for conducting CO2-EOR. However, oil field costs have also increased sharply, reducing the economic margin essential for justifying this still emerging (and to many operators, novel and risky) oil recovery option.

The cost and economic margins of a representative, reasonably favorable CO2-EOR project are provided, for illustrative purposes, in Table 6 below. (The reader is advised that considerable reservoir-specific variations exist around the cost and economic margin values shown in the illustrative CO2-EOR project.)

Table 6. Illustrative Costs and Economics of a CO2-EOR Project

Assumed Oil Price ($/B)		$70
Less:		
	▪ Gravity/Basis Differentials, Royalties and Production Taxes	($15)
Net Wellhead Revenues ($/B)		$55
Less:		
	▪ Capital Costs	($5 to $10)
	▪ CO2 Costs (@ $2/Mcf for purchase; $0.70/Mcf for recycle)	($15)
	▪ Well/Lease O&M	($10 to $15)
Economic Margin, Pre-Tax ($/B)		$15 to $25

Given the significant front-end investment in wells, recycle equipment and purchase of CO2 (equivalent to $20 to $25 per barrel) and the time delay in reaching peak oil production, pre-tax economic margins on the order of the front-end investment will be required to achieve economically favorable rates of return. Oil reservoirs with higher capital cost requirements and less favorable CO2 to oil ratios would not achieve an economically justifiable return on investment, requiring advanced, more efficient CO2-EOR technology and/or credits for storing CO2.

3.4.2. Economically Recoverable Resources: Base Case

In the Base Case, 45 billion barrels of incremental oil become economically recoverable from applying CO2-EOR. The Base Case evaluates the CO2-EOR potential using an oil price of $70 per barrel (constant, real) and a CO2 cost of $45 per metric ton ($2.38 per Mcf) (delivered at pressure to the field, constant and real).

The $70 per barrel oil price is used as the project investment oil price, established using the average price of crude oil over the past three years, consistent with the investment oil price methodology used in NEMS.

Table 7 presents the basin-by-basin tabulation of economically recoverable resources from applying “state-of-the-art” CO2-EOR technology under Base Case economics.

3.4.3. Economically Recoverable Resources: Sensitivity Cases

To gain insights as to how changes in oil prices would influence the volumes of economically recoverable resources from applying CO2-EOR, the story examined one lower and two higher oil price cases (and their associated CO2 costs).

Table 8 presents the 45 billion barrels of domestic oil recovery potentially available from CO2-EOR at the Base Case oil price and CO2 cost. This increases to 47.9 to 48.3 billion barrels of higher ($90 to $100/B) oil prices and drops to 39.1 billion barrels at lower ($50/B) oil price.

Table 7. Economically Recoverable Resources from Applying "State-of-the-Art" CO2-EOR: National Totals at Base Case Economics*

Basin/Area	Incremental Technically Recoverable (Billion Barrels)	Incremental Economically Recoverable* (Billion Barrels)
1. Alaska	12.4	9.5
2. California	6.3	5.4
3. Gulf Coast (AL, FL, MS, LA)	7.0	2.2
4. Mid-Continent (OK, AR, KS, NE)	10.6	5.6
5. Illinois/Michigan	1.2	0.5
6. Permian (W TX, NM)	15.9	7.1
7. Rockies (CO,UT,WY)	3.9	1.9
8. Texas, East/Central	17.6	8.3
9. Williston (MT, ND, SD)	2.5	0.5
10. Louisiana Offshore	5.8	3.9
11. Appalachia (WV, OH, KY, PA)	1.6	0.1
Total	84.8	45.0

*Base Case Economics use an oil price of $70 per barrel (constant, real) and a CO2 cost of $45 per metric ton ($2.38/Mcf), delivered at pressure to the field.

Table 8. Economically Recoverable Resources from Applying "State-of-the-Art" CO2-EOR: National Totals at Base Case and Alternative Oil Prices/CO2 Costs

Oil Prices	CO2 Costs			
($ per Bbl)	($ per metric ton)			
	$35	$45*	$55	$60
Lower Prices				
$50	39.1 BBbls			
Base Case				
$70		45.0 BBbls		
Higher Prices				
$90			47.9 BBbls	
$100				48.3 BBbls

*A CO2 cost of $45 per metric ton (mt) is equal to $2.38 per Mcf

The estimates of economically recoverable domestic oil from applying CO2-EOR have been calculated using a minimum financial hurdle rate of 15% (real, before tax). Higher financial hurdle requirements, appropriate for rapidly installing "state-of-the-art" CO2-EOR technology in new basins and geologic settings, would reduce the above (Table 8) volumes of economically recoverable oil.

To examine the impact of a higher financial return on economically recoverable oil from CO2-EOR, the study applied a higher, 25% (real, before tax) financial hurdle rate. Under this higher hurdle rate, but still at Base Case oil prices and CO2 costs, the economically recoverable oil decreases to 38.2 billion barrels. While the higher financial hurdle rate eliminates a number of economically marginal CO2-EOR prospects, the great bulk of the fields remain economic, supporting the financial robustness of this oil recovery technology.

Figure 6 illustrates the volumes of domestic oil recovery potentially available from applying CO2-EOR technology at alternative oil prices and CO2 costs (using the assumed relationship in the economic model between oil prices and CO2 costs, shown in Table 8).

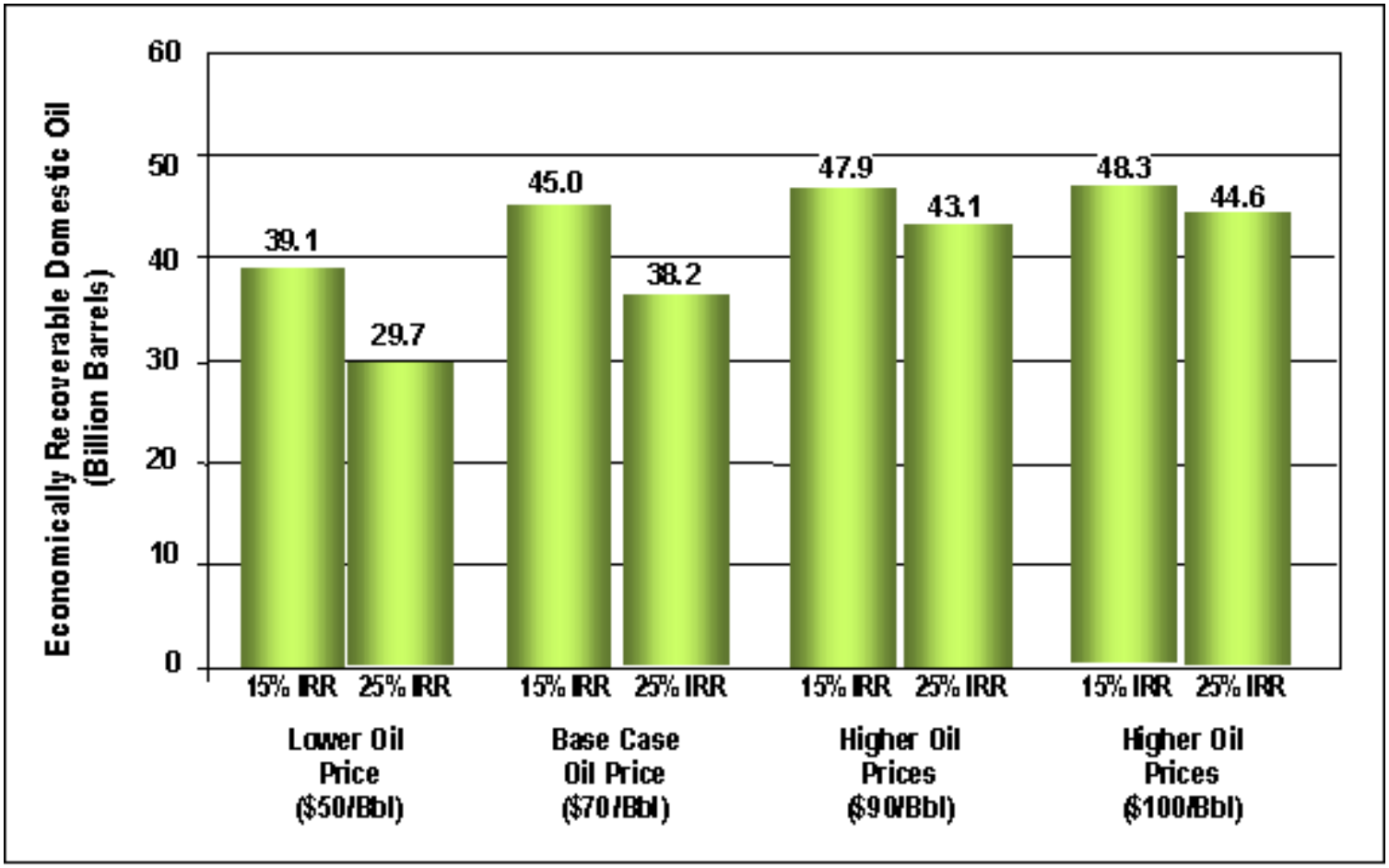

Figure 6. Economically Recoverable Domestic Oil Resources from Applying CO2-EOR

It is instructive to note that the oil recovery potential from CO2-EOR remains significant, at 39.1 billion barrels, even under the lower, $50 per barrel, oil price case. Equally instructive to note is that higher oil prices, by themselves, will not unlock much more of the large 84.8 billion barrel technically recoverable oil resource available from state-of-the-art CO2-EOR.

Advances in CO2-EOR technology, as discussed in the previously published Advanced Resources/DOE report, “Evaluating The Potential For ‘Game Changer’ Improvements In Oil Recovery Efficiency From CO2 Enhanced Oil Recovery”, will be required to make more of this technically recoverable resource economic.

4.0 The Market for Storing CO2 with EOR

The primary purpose of this report is to establish how much CO2, particularly CO2 emissions captured by power plants, could be stored with enhanced oil recovery.

Chapter 3 established that 39 to 48 billion barrels of economic, incremental domestic oil could be produced by timely application of CO2-EOR technology. This chapter draws on this oil recovery assessment to estimate how much CO2, particularly CO2 emissions captured from new coal-fueled power plants, would be required to produce this volume of economically recoverable oil, helping establish the market for captured CO2 emissions.

4.1. The CO2 Injection and Storage Process

The analysis shows that significant volumes of CO2 (ranging from 10 to 13 billion metric tons depending on oil price) can be stored with enhanced oil recovery. The sequence for doing so is as follows:

- Initially, purchased CO2, equal to 1 HCPV, is injected along with water for mobility control.
- As oil with CO2 begins to be produced, the CO2 is separated from the oil and reinjected. As the produced volumes of CO2 increase, these larger volumes of CO2 are reinjected, continuing the life of the CO2-EOR project.
- Near the end of the CO2-EOR project, the operator may choose to close the field at pressure, storing essentially all of the injected CO2, or may inject a large (1 to 2 HCPV) slug of water to recover any remaining mobile oil and CO2. This CO2 may then be used in another portion of the reservoir or sold to another oil field.

In general, about 5 to 6 Mcf (0.26 to 0.32 metric tons (mt)) of purchased CO2 per barrel of oil is used and stored as part of CO2-EOR. This is augmented with 5 to 10 Mcf (0.26 mt to 0.52 mt) of recycled CO2 during the latter stages of a CO2-EOR process.

With incentives for storing CO2 emissions and "next generation" CO2 storage technology, considerably larger volumes of CO2 could be stored. Additional discussion of "next generation" storage of CO2 with EOR is provided in Appendix C.

4.2. Producing "Carbon Free" Domestic Oil

A typical barrel of crude oil contains 0.42 metric tons (mt) of releasable CO2 (assuming that 3% of the produced and refined oil barrel remains as asphalt or coke). As such, netting the injection and storage of 0.26 to 0.32 mt of CO2 emissions against the 0.42 mt of CO2 in the produced oil, makes the domestic oil produced by CO2-EOR about 70% (62% to 76%) "carbon free".

Two of the alternatives to using domestic oil produced by CO2-EOR have a much less favorable net CO2 balance. Imported oil is 0% "carbon free" (and results in additional CO2 emissions from ocean transportation). Domestic corn ethanol is only 10 to 15% "carbon free", as significant volumes of energy are required for producing the corn feedstock and final product. When coal is used as the dominant energy source in ethanol production, corn-based ethanol drops to below 0% "carbon free" and becomes a contributor to the CO2 emissions problem.

4.3. The Market for CO2

The market for CO2 from power plant and industrial sources is substantial, depending on oil prices and CO2 costs. (The CO2 costs used in this study assume that the CO2 is delivered to the oil field, at pressure.)

Table 9 provides a basin-by-basin tabulation of the volumes of CO2 that would be required to produce the incremental volumes of economically recoverable domestic oil from applying CO2-EOR in the Base Case ($70 per barrel oil price and $45 per metric ton CO2 cost, delivered at pressure).

Table 10 provides the aggregate tabulation of the market for CO2 for EOR as a function of the Base Case oil price and CO2 cost, as well as for three alternative oil prices (assuming the relationships between oil prices and CO2 costs established in the economic model). A review of the past history of CO2 costs shows that they have been, in general, linked to oil prices.

Table 9. Economically Feasible Market for CO2 for CO2-EOR: Base Case*
(Eleven Basins/Areas)

Basin/Area	Gross Market for CO2 (million metric tons)	CO2 Already or Scheduled to be Injected (million metric tons)	Net New Market for CO2 (million metric tons)
1. Alaska	2,094	-	2,094
2. California	1,375	-	1,375
3. Gulf Coast (AL, FL, MS, LA)	652	**	652
4. Mid-Continent (OK, AR, KS, NE)	1,443	20	1,423
5. Illinois/Michigan	127	-	127
6. Permian (W TX, NM)	2,712	570	2,142
7. Rockies (CO,UT,WY)	574	74	500
8. Texas, East/Central	1,940	-	1,940
9. Williston (MT, ND, SD)	130	-	130
10. Louisiana Offshore	1,368	-	1,368
11. Appalachia (WV, OH, KY, PA)	36	-	36
Total	12,451	664	11,787

*Base Case: Oil price of $70 per barrel; CO2 cost of $45 per metric ton.

Table 10. Economically Feasible Market Demand for CO2 by CO2-EOR: Alternative Cases (Eleven Basins/Areas)

Basin/Area	Base Case ($70/Bbl) (million metric tons)	Lower Oil Price Case* ($50/Bbl) (million metric tons)	Higher Oil Price Cases** ($90/Bbl) (million metric tons)	Higher Oil Price Cases** ($100/Bbl) (million metric tons)
1. Alaska	2,094	1,740	2,214	2,235
2. California	1,375	1,350	1,405	1,405
3. Gulf Coast (AL, FL, MS, LA)	652	465	805	823
4. Mid-Continent (OK, AR, KS, NE)	1,423	1,403	1,430	1,430
5. Illinois/Michigan	127	112	141	142
6. Permian (W TX, NM)	2,142	1,696	2,384	2,438
7. Rockies (CO,UT,WY)	500	436	512	514
8. Texas, East/Central	1,940	1,810	2,069	2,069
9. Williston (MT, ND, SD)	130	125	148	158
10. Louisiana Offshore	1,368	904	1,599	1,599
11. Appalachia (WV, OH, KY, PA)	36	9	46	46
Total	11,787	10,050	12,753	12,859

*Lower Oil Price Case: Oil price of $50 per barrel; CO2 cost of $35 per metric ton.

**Higher Oil Price Cases: Oil price of $90 and $100 per barrel; CO2 costs of $55 and $60 per metric ton.

4.4. Market Demand for CO2: Power Plant Perspective

So far, the report has examined the market demand for CO2 from the perspective of the enhanced oil recovery industry. In this section of the report, we examine in more detail the market demand for CO2 from the power plant perspective, giving priority to market demand that might be met by capture and sale of CO2 emissions from the coal-fueled power sector.

The overall demand for CO2 by the CO2-EOR industry can be met by three potential sources of CO2 supply, namely:

- Natural CO2 supplies already found and defined in geological structures;
- Industrial, high concentration sources of CO2 that are currently being captured and used by the CO2-EOR industry; and
- The large volumes of power plant and industrial emissions of CO2 that may need to be captured and stored to meet CO2 management goals.

To better align the CO2 market demand information in this report with the power sector, the aggregate demand for CO2 of 11,787 million metric tons (223 Tcf) is presented according to the 14 EIA National Energy Modeling System (NEMS) Electricity Market Module (EMM),Table 11.

Excluding Alaska, which is not projected to build new coal-fueled power plants to any great extent, the demand for CO2 in the lower-48 states offered by the EOR industry is 9,694 million metric tons (183.4 Tcf), Table 11. Figure 7 provides the outline for the 14 EMM regions; Table 12 provides a simplified crosswalk between the 14 EMM regions and their included states.

NEMS Regions: CO2 supply and demand have been organized according to the 14 NEMS regions (13 lower-48 plus Alaska) in the Electricity Market Module

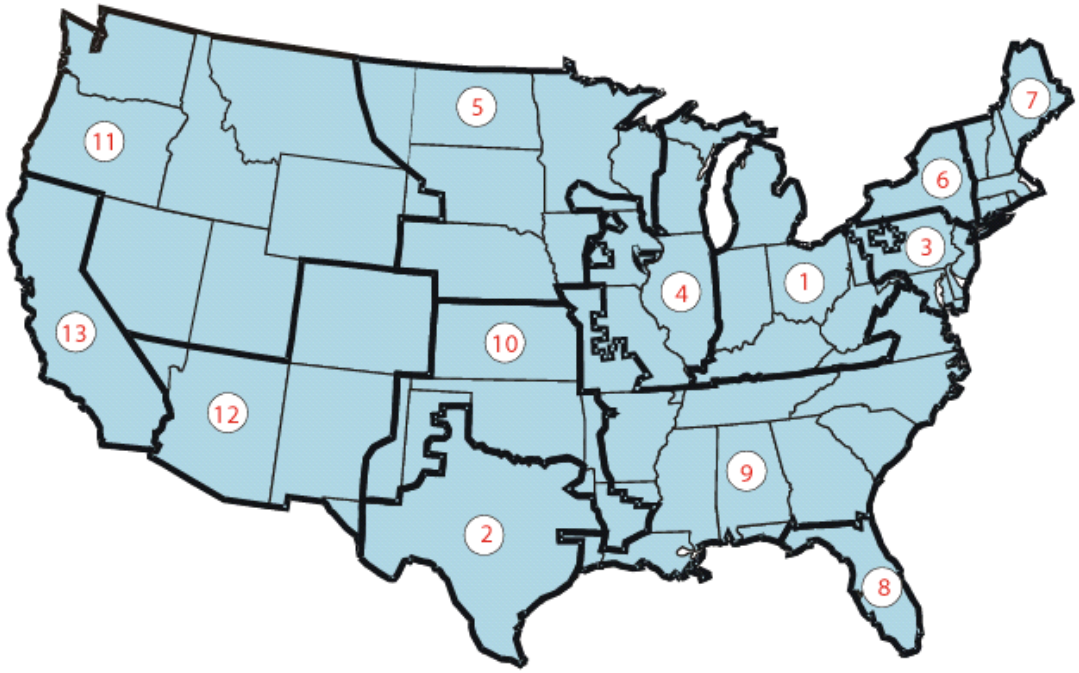

JAF02709.PPT

Figure 7. Geographical Regions in the NEMS Electricity Market Module

Table 11. Economically Feasible Market Demand for CO2 by EOR: NEMS/EMM Power Generation Regions

NEMS EMM Region	Demand for CO2 for EOR	
	Million Metric Tons	Tcf
Region 1 - ECAR	58	1.1
Region 2 – ERCOT	3,820	72.3
Region 3 – PJM (MAAC)	4	0.1
Region 4 – MAIN	100	1.9
Region 5 – MAPP	109	2.1
Region 6 – NY ISO	-	-
Region 7 – NW ISO	-	-
Region 8 – Florida	9	0.2
Region 9 – SERC	2,116	40.0
Region 10 – SWPP	1,570	29.7
Region 11 – WECC/NWPP	411	7.8
Region 12 – WECC/RMPP	120	2.3
Region 13 – WECC/CA	1,376	26.0
Region 14 - Alaska	2,093	39.6
Total U.S.	**11,787**	**223.0**
Lower-48	**9,694**	**183.4**

*Base Case: $70/Bbl oil and $45/mt CO2.

Table 12. Simplified Crosswalk Between the EMM Regions and States

NEMS EMM Region	Associated State(s)
Region 1 - ECAR	Kentucky, West Virginia, Ohio, Indiana, Michigan
Region 2 – ERCOT	Texas
Region 3 – PJM (MAAC)	Pennsylvania, Delaware, New Jersey, Maryland
Region 4 – MAIN	Illinois, Missouri, Iowa, Wisconsin
Region 5 – MAPP	North Dakota, South Dakota, Nebraska, Minnesota
Region 6 – NY ISO	New York
Region 7 – NW ISO	Vermont, New Hampshire, Maine, Massachusetts, Connecticut, Rhode Island
Region 8 – Florida	Florida
Region 9 – SERC	Arkansas, Louisiana, Mississippi, Alabama, Tennessee, Georgia, South Carolina, North Carolina
Region 10 – SWPP	Oklahoma, Kansas and New Mexico
Region 11 – WECC/NWPP	Washington, Oregon, Idaho, Montana, Wyoming, Utah, Nevada
Region 12 – WECC/RMPP	New Mexico, Colorado, Arizona
Region 13 – WECC/CA	California
Region 14 - Alaska	Alaska

Table 13 sets forth the net remaining demand for CO2 by the EOR industry of 7,470 million metric tons for the lower-48 states, after subtracting the 2,224 million metric tons (42.2 Tcf) of CO2 available, in the next 30 years, from natural CO2 deposits and high concentration industrial CO2 sources (e.g., natural gas processing plants, fertilizer plants) already being captured and used for enhanced oil recovery.

Table 14 tabulates the existing sources of CO2, both natural and anthropogenic, that are currently injected for EOR.

Table 13. Economically Feasible Market Demand for CO2 by EOR: NEMS/EMM Power Generation Regions*

NEMS EMM Region	Purchased CO2 Requirements	Natural CO2**	Industrial CO2**		Unmet (Net) Demand for CO2	
	(Tcf)	(Tcf)	(MMcfd)	(Tcf)	(Tcf)	(Million mt)
Region 1 - ECAR	1.1	-	15	***	1.1	58
Region 2 – ERCOT	72.2	25	110	1.2	46.0	2,436
Region 3 – PJM (MAAC)	0.1	-	-	-	0.1	4
Region 4 – MAIN	1.9	-	-	-	1.9	100
Region 5 – MAPP	2.1	-	-	-	2.1	109
Region 6 – NY ISO	-	-	-	-	-	-
Region 7 – NW ISO	-	-	-	-	-	-
Region 8 – Florida	0.2	-	-	-	0.2	9
Region 9 – SERC	40.0	8	-	-	32.0	1,695
Region 10 – SWPP	29.7	5	35	0.4	24.3	1,286
Region 11 – WECC/NWPP	7.8	-	175	1.9	5.9	311
Region 12 – WECC/RMPP	2.3	-	65	0.7	1.6	83
Region 13 – WECC/CA	26.0	-	-	-	26.0	1,377
Region 14 - Alaska	39.6	5	-	-	34.6	1,831
TOTAL U.S.	223.0	43	400	4.2	175.8	9,301
TOTAL Lower-48	183.4	38	400	4.2	141.2	7,470

*Base Case: $70/Bbl oil and $45/mt CO2

**Assumed available to be produced and productively used by the CO2-EOR industry in the next 30 years.

***Less than 0.01 Tcf and thus not included in totals.

Table 14. Existing CO2 Supplies

(Volumes of CO2 Injected for EOR*)

State/ Province (storage location)	Source Type (location)	CO2 Supply MMcfd**	
		Natural	Anthropogenic
Texas-Utah-New Mexico-Oklahoma	Geologic (Colorado-New Mexico) Gas Processing (Texas)	1,700	110
Colorado-Wyoming	Gas Processing (Wyoming)	-	240
Mississippi	Geologic (Mississippi)	400	-
Michigan	Ammonia Plant (Michigan)	-	15
Oklahoma	Fertilizer Plant (Oklahoma)	-	35
Saskatchewan	Coal Gasification (North Dakota)	-	145
TOTAL		2,100	545

* Source: 12th Annual CO2 Flooding Conference, Dec. 2006

** MMcfd of CO2 can be converted to million metric tons per year by first multiplying by 365 (days per year) and then dividing by 18.9 * 10^3 (Mcf per metric ton).

The EIA NEMS Electricity Market Model in AEO 2008 projects that 121 new, one GW size, coal-fueled power plants will come on stream between now and 2030. If these 121 GWs of coal-fueled power generation capacity were equipped with CCS, they would provide 20.5 billion metric tons of captured CO2 emissions, assuming 90% CO2 capture, 38% power plant efficiency, 85% operating capacity, and 30 years of operations. Table 15 sets forth the volumes of CO2 emissions that theoretically would be available in each of the EMM regions (lower-48) from the installation of these new coal-fueled power plants.

A closer look at CO2 demand (net, after subtracting CO2 supplies available from natural and already captured industrial CO2 sources) for EOR shows: (1) there is unmet (net) demand for CO2 in eleven of the EMM regions that could be filled in part or in whole by captured CO2 emissions from power plants; and (2) while the overall supply of CO2 from power plants would more than fulfill the overall (net) CO2 demand from the EOR industry, Region #13 (WECC, CA) appears to be “short” in terms of CO2 supplies, due to the absence of new coal-fueled power plant capacity. (Most likely, installation of

CO2 pipelines crossing EMM regional boundaries would be used to match CO2 demand with available supply.)

The overall conclusion from the analysis is that CO2-EOR may provide a 7,500 million metric ton market for captured CO2 emissions by the coal-fueled power generation industry. While the actual revenues afforded by this market will be established, in the main, by one-on-one negotiations between individual power companies and oil field operators, the potential size of this market could be large.

Using an oil price of $70 per barrel (Base Case), assuming a delivered CO2 cost of $45 per metric ton, and subtracting $10 per metric ton for transportation and handling, the revenue potential offered by the CO2-EOR market could reach $260 billion. In addition, the sale of captured CO2 emissions to the CO2-EOR industry would enable power companies to avoid the costs and challenges of storing CO2.

Table 15. Comparison of Net CO2 Demand (for EOR) with Potential Captured CO2 Emissions from Coal-Fueled Power Plants

EMM Region	Region	States	Coal Deployment 2007-2030	Available CO2 From Coal*	Demand for CO2 @ $45/mt & $70/B Oil	Shortfall (Excess) in CO2 Supply
#			(GW)	(MMmt)	(MMmt)	(MMmt)
2	ERCOT	TX	21.0	3,570	2,438	(1,132)
9	SERC	AR, LA, MS, AL, TN, GA, SC, NC	32.7	5,559	1,695	(3,864)
13	WECC/CA	CA	0.0	-	1,377	1,377
10	SWPP	OK, KS, NM	9.3	1,581	1,286	(295)
11	WECC/NWPP	WA, OR, ID, MT, WY, UT, NV	6.4	1,088	311	(777)
5	MAPP	ND, SD, NE, MN	2.5	425	109	(316)
4	MAIN	IL, MO, IA, WI	3.3	561	100	(461)
12	WECC/RMPP	CO, AZ	17.4	2,958	83	(2,875)
1	ECAR	KY, WV, OH, IN, MI	2.5	425	58	(367)
8	Florida	FL	12.5	2,125	9	(2,116)
3	PJM (MAAC)	PA, DE, NJ, MD	8.2	1,394	4	(1,390)
6	NY ISO	NY	5.1	867	-	(867)
7	NE ISO	VT, NH, ME, MA, CT, RI	0.0	-	-	-
U.S. Total			120.9	20,553	7,471	(13,082)

*Assuming all new Coal Plants capture 90% of CO2, operate at 85% capacity and 38% efficiency (8,876 Btu/kWh); includes 30 years of CO2 emissions.

5.0 Using Sale of Captured CO2 Emission for "Early Market Entry" of CCS Technology

As discussed in the previous chapter, CO2-EOR may provide a large, "value added" market for sale of captured CO2 emissions from power plants and other industrial sources. Should this market develop in a timely fashion, it would support "early market entry" of carbon capture and storage (CCS) technology, particularly by coal-fueled power plants.

5.1. Economics of CCS

A common feature of EIA carbon management studies is that, in general, CCS is not considered, as of yet, a key part of the solution[1,2,3]. The reason, according to EIA's EMM cost model, is that using CCS with coal- or gas-fired power is not economically competitive with other options for generating power with low CO2 emissions, as shown on Figure 8.

As set forth in EIA's cost model, incorporation of CCS with new advanced coal-fueled power plant currently adds over $20 per MWh of costs, making this a higher cost option than advanced nuclear power and subsidized wind- or biomass-based electricity generation. Even by 2020, assuming modest technology progress for advanced coal and CCS, adding CCS to a coal-fueled power plant would increase electricity generation and transmission costs by nearly $19 per MWh, keeping this a high cost option.

Figure 8 shows that, according to EIA' Reference Case for 2020, Advanced Coal with CCS would entail costs of $81 per MWh of electricity compared to $60 per MWh for Pulverized Coal without CCS and $66 per MWh for Advanced Nuclear.

---

[1] Energy Market and Economic Impacts of a Proposal to Reduce Greenhouse Gas Intensity with a Cap and Trade Systems, U.S. DOE, Energy Information Administration, January, 2007.

[2] Energy Market Impacts of Alternative Greenhouse Gas Intensity Reduction Goals, U.S. DOE, Energy Information Administration, March, 2006.

[3] Energy Market Impacts of a Clean Energy Portfolio Standard - Follow-up, U.S. DOE, Energy Information Administration, February, 2007.

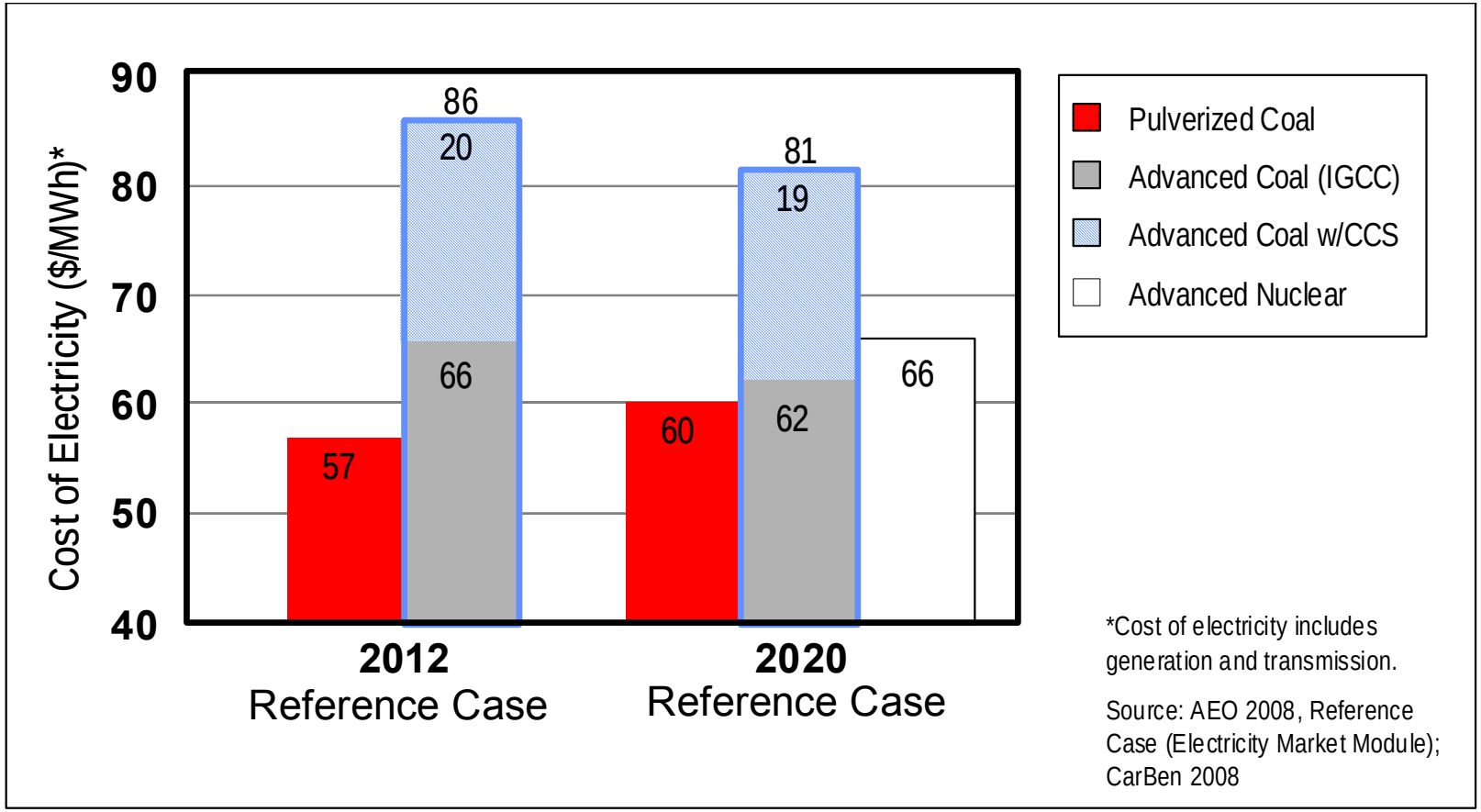

JAF02709.PPT

Figure 8. Advanced Coal Plants w/CCS Are Currently Uncompetitive in 2012 and 2020 (EIA's AEO 2008 Reference Case)

However, revenues from selling captured CO2 emissions into the CO2-EOR market can change the competitive outlook. For example, as shown in Table 16, the sale of captured CO2 emissions at $25 to $35 per metric ton can reduce the costs of power generation with CCS by $17 to $24 per MWh, significantly offsetting the costs of installing CCS with new coal-fueled power plants.

Table 16. Relationship of CO2 Sales Price to Cost Offsets in the Coal-Fueled Power Sector (Year 2020)

Sale of CO2	**Sale of CO2**
@ $25/mt CO2	@ $35/mt CO2
7,920 btu/kWh x	7,920 btu/kWh x
94 MMmt CO2/QBtu x	94 MMmt CO2/QBtu x
90% Capture	90% Capture
Cost Offset: $16.80/MWh	Cost Offset: $23.50/MWh

5.2. Supporting "Early Market Entry" of CCS Technology

To examine just how much contribution to "early market entry" of CCS may be possible from sale of captured CO2 emissions into the EOR market, the study integrated the previously presented CO2 demand information into the CarBen Model's version of the DOE/EIA NEMS Electricity Market Module.

The CarBen and EIA EMM Models provide the year 2012 and year 2020 cost and competitive positions for three coal-fueled power generation options, Table 17.

Table 17. EIA Reference Case Year 2012 and Year 2020 Costs of Electricity

Power Generation Option	Cost of Electricity $/MWh*	
	Year 2012	Year 2020
1. Pulverized Coal without CCS	$56.60	$59.70
2. Advanced Coal without CCS	$65.70	$62.00
3. Advanced Nuclear	-	$66.00
4. Advanced Coal with CCS	$86.30	$80.80

*Costs include generation and transmission

Sale of captured CO2 emissions at $35 per metric ton ($1.85/Mcf) at the plant gate, equal to $45 per mt ($2.38/Mcf) at the oil field lease line (assuming $10 per mt ($0.53/Mcf) for transportation), would provide a cost offset of $23.50/MWh.

In 2012, the revenue offset of $23.50/MWh from sale of captured CO2 emissions is not sufficient to make CCS cost competitive. By 2020, however, with assured, long-term sale of captured CO2 emissions at $35 per metric ton (at the plant gate) providing $23.80/MWh of revenue offsets, new advanced coal plans with CCS would become cost competitive with alternative, non-CCS coal based power generation options, as shown in Table 18 and in Figure 9.

Table 18. Cost of Electricity in Year 2020 with Sale of CO2

Power Generation Option	Cost of Electricity (2020)		
	Initial* Cost	CO2 Sale Offset	Final* Cost
	($/MWh)	($/MWh)	($/MWh)
1. Pulverized Coal without CCS	$59.70	-	$59.70
2. Advanced Coal without CCS	$62.00	-	$62.00
3. Advanced Nuclear	$66.00	-	$66.00
4. Advanced Coal with CCS	$80.80	($23.50)	$57.30

*Costs are for 2020 and include transmission

The CarBen and EIA EMM models project that 29 new coal-fueled power plants would be placed into operation between 2013 and 2020 in the lower-48. Assuming that half of these power plants are favorably located with respect to oil fields attractive for CO2-EOR and are able to sell CO2 at $35/mt at the plant gate, the integration of CO2 storage and EOR would support the construction of 15 new advanced coal w/CCS power plants, each with 1 GW of capacity. (A 1 GW advanced coal-fueled power plant built by 2020 is estimated to be able to sell about 5.1 million metric tons of captured CO2 emissions per year; 15 plants would be able to provide 2,300 million metric tons in 30 years). Additional sales of captured CO2 emissions by power plants built after 2020 would support additional installations of CCS, as discussed below.

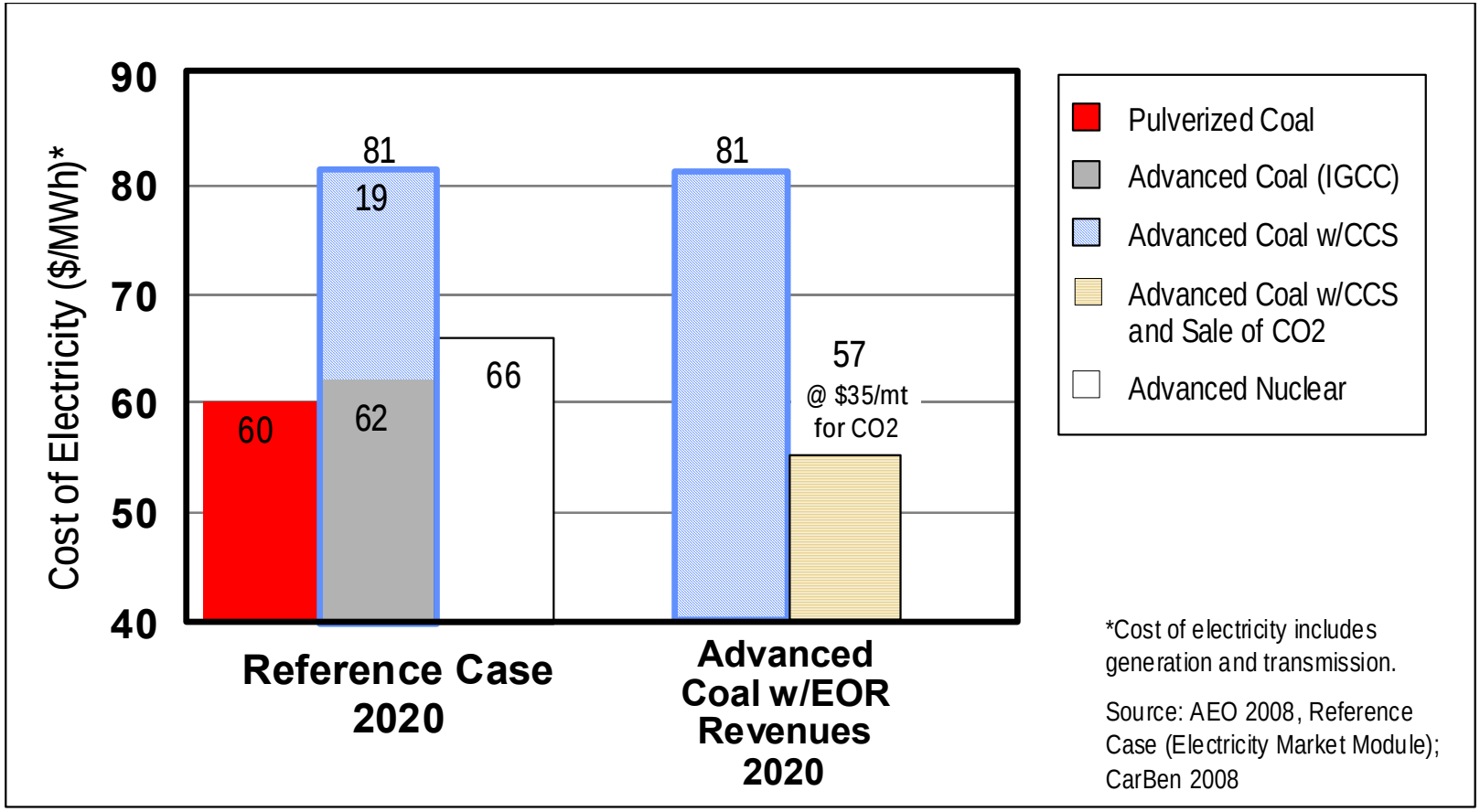

JAF02709.PPT

Figure 9. Sale of Captured CO2 Emissions Can Help Make Coal Plants w/CCS Competitive

5.3. Adding "Learning" to the "Early Market Entry" Opportunity

The CarBen and EIA EMM models contain a "learning" function which reduces the costs of installing new technology as a function of the number of CCS installations. As such, the costs of producing advanced coal-fueled electricity with CCS decline.

The "early market entry" of 15 CCS installations, made possible by the sale of captured CO2 emissions into the EOR market, helps accelerate the "learning" process. As such, the costs of producing electricity using advanced coal with CCS are expected to decline to $74.50/MWh by 2020, as shown in Table 19.

Table 19. Year 2020 Costs of Electricity with Accelerated "Learning" Based Cost Reductions

Power Generation Option	Cost of Electricity $/MWh* Year 2020
1. Pulverized Coal without CCS	$59.70
2. Advanced Coal without CCS	$62.00
3. Advanced Nuclear	$66.00
4. Advanced Coal with CCS**	$74.50

*Costs include transmission

**Accelerated "learning" only applied to Advanced Coal with CCS

The significance of the "learning" based cost reductions for advanced coal-fueled power w/CCS is that now a lower sales price for captured CO2 emissions, at $25/mt ($1.32/Mcf) at the plant gate, equal to $35/mt ($1.85/Mcf) at the oil field lease line, (assuming $10/mt ($0.53/Mcf) for transportation), would provide sufficient cost offsets of $16.80/MWh to make advanced coal w/CCS cost competitive.

With assured, long-term sale of captured CO2 at $25 per metric ton at the plant gate, and assuming cost reductions due to "learning", new advanced coal plants with CCS providing electricity at a cost of $58 per MWh would be the preferred economic choice for the post-2020 time period, as shown in Table 20 and Figure 10.

Table 20. Year 2020 Cost of Electricity with "Learning" and CO2 Sale Offset

Power Generation Option	Cost of Electricity (2020)		
	Initial* Cost	CO2 Sale Offset	Final* Cost
	($/MWh)	($/MWh)	($/MWh)
1. Pulverized Coal without CCS	$59.70	-	$59.70
2. Advanced Coal without CCS	$62.00	-	$62.00
3. Advanced Nuclear	$66.00	-	$66.00
4. Advanced Coal with CCS	$74.50	($16.80)**	$57.70

*Costs include transmission

**CO2 sale for a plant with EIA Reference Case efficiency and $25/mt CO2 price, at the plant gate.

An additional 80 new (1 GW size) coal-fueled power plants are expected in the lower-48 between 2020 and 2030. Subtracting the purchase of 2,300 million metric tons of captured CO2 emissions from 15 plants, the lower-48 EOR market has a remaining demand for an additional 5,170 million metric tons of CO2. Assuming that a sufficient number of these plants are favorably located, the unmet demand for CO2 by the EOR market would support the installation of 34 advanced coal power plants with CCS between years 2020 and 2030, bringing the total to 49 new power plants with CCS.

The sale of captured CO2 emissions could enable 40% (49 out of 121) of the new coal-fueled power plants expected to be built between now and 2030 to install CCS, providing significant assistance toward addressing CO2 emissions in this sector and helping further drive down the costs of CCS technology.

Additional information on the incorporation of sales of captured CO2 emissions by power plant into the Electricity Generation Module of the CarBen Model (a simplified component of the EIA NEMS EMM) is provided in Appendix B.

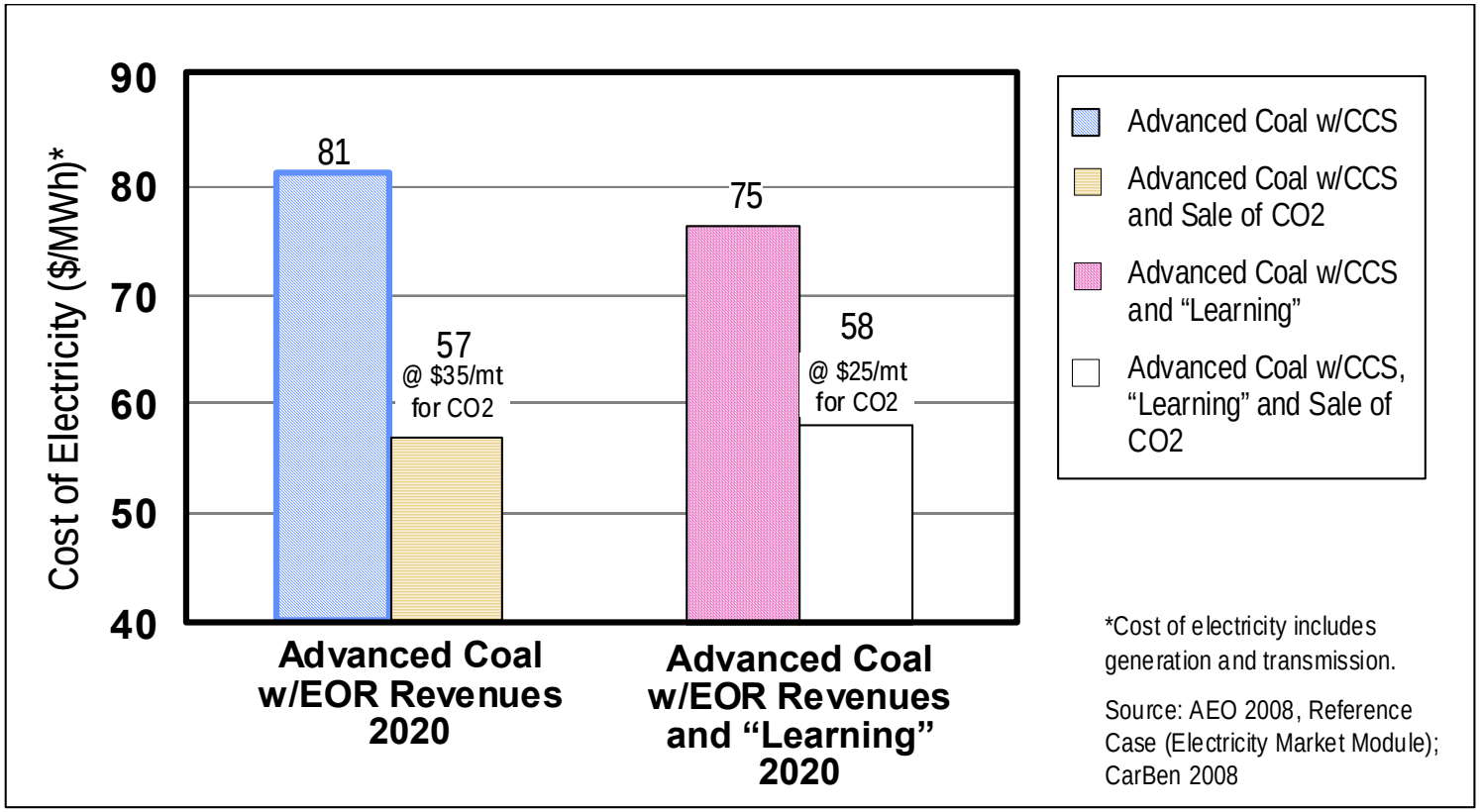

JAF02709.PPT

Figure 10. Sale of Captured CO2 Emissions Can Help Make Coal Plants w/CCS Competitive.

Appendix A

Study Methodology

A. STUDY METHODOLOGY

A.1 OVERVIEW. A six part methodology was used to assess the CO_2 storage and EOR potential of domestic oil reservoirs. The six steps were: (1) assembling the Major Oil Reservoirs Data Base; (2) calculating the minimum miscibility pressure; (3) screening reservoirs for CO_2-EOR; (4) calculating oil recovery; (5) assembling the cost and economic model; and, (6) performing economic and sensitivity analyses.

A.2 ASSEMBLING THE MAJOR OIL RESERVOIRS DATA BASE. The study started with the data base used in the previous set of "basins studies". The study updated and augmented this data base by incorporating the internally prepared Appalachian Basin Data Base and by incorporating other improvements to this data base previously performed by Advanced Resources.

Table A-1 illustrates the oil reservoir data recording format developed by the study. The data format readily integrates with the input data required by the CO_2-EOR screening and oil recovery models, discussed below. Overall, the Major Oil Reservoirs Data Base contains 2,012 reservoirs, accounting for 74% of the oil expected to be ultimately produced in the U.S. by primary and secondary oil recovery processes.

Table A-1. Reservoir Data Format: Major Oil Reservoirs Data Base

Basin Name

Field Name

Reservoir

Print Sheet

Reservoir Parameters:

	ARI
Area (A)	
Net Pay (ft)	
Depth (ft)	
Porosity	
Reservoir Temp (deg F)	
Initial Pressure (psi)	
Pressure (psi)	
B_{oi}	
B_o @ S_o, swept	
S_{oi}	
S_{or}	
Swept Zone S_o	
S_{wi}	
S_w	
API Gravity	
Viscosity (cp)	
Dykstra-Parsons	

Oil Production

	ARI
Producing Wells (active)	
Producing Wells (shut-in)	
2002 Production (Mbbl)	
Daily Prod - Field (Bbl/d)	
Cum Oil Production (MMbbl)	
EOY 2002 Oil Reserves (MMbbl)	
Water Cut	

Water Production

2002 Water Production (Mbbl)	
Daily Water (Mbbl/d)	

Injection

Injection Wells (active)	
Injection Wells (shut-in)	
2002 Water Injection (MMbbl)	
Daily Injection - Field (Mbbl/d)	
Cum Injection (MMbbl)	
Daily Inj per Well (Bbl/d)	

EOR

Type	
2002 EOR Production (MMbbl)	
Cum EOR Production (MMbbl)	
EOR 2002 Reserves (MMbbl)	
Ultimate Recovered (MMbbl)	

Volumes

	ARI P/S
OOIP (MMbl)	
P/S Cum Oil (MMbl)	
EOY P/S 2002 Reserves (MMbl)	
P/S Ultimate Recovery (MMbl)	
Remaining (MMbbl)	
Ultimate Recovered (%)	

OOIP Volume Check

Reservoir Volume (AF)	
Bbl/AF	
OOIP Check (MMbl)	

SROIP Volume Check

Reservoir Volume (AF)	
Swept Zone Bbl/AF	
SROIP Check (MMbbl)	

ROIP Volume Check

ROIP Check (MMbl)	

Considerable effort was required to construct an up-to-date, volumetrically consistent data base that contained all of the essential data, formats and interfaces to enable the study to: (1) develop an accurate estimate of the size of the original and remaining oil in-place; (2) reliably screen the reservoirs as to their amenability for miscible and immiscible CO_2-EOR; and, (3) provide the *CO_2-PROPHET* Model the essential input data for calculating CO_2 injection requirements and oil recovery.

A.3 CALCULATING MINIMUM MISCIBILITY PRESSURE. The miscibility of a reservoir's oil with injected CO_2 is a function of pressure, temperature and the composition of the reservoir's oil. The study's approach to estimating whether a reservoir's oil will be miscible with CO_2, given fixed temperature and oil composition, was to determine whether the reservoir would hold sufficient pressure to attain miscibility. Where oil composition data was missing, a correlation was used for translating the reservoir's oil gravity to oil composition.

To determine the minimum miscibility pressure (MMP) for any given reservoir, the study used the Cronquist correlation, Figure A-1. This formulation determines MMP based on reservoir temperature and the molecular weight (MW) of the pentanes and heavier fractions of the reservoir oil, without considering the mole percent of methane. (Most Gulf Coast oil reservoirs have produced the bulk of their methane during primary and secondary recovery.) The Cronquist correlation is set forth below:

$$MMP = 15.988*T^{(0.744206+0.0011038*MW\ C5+)}$$

Where: T is Temperature in °F, and MW C5+ is the molecular weight of pentanes and heavier fractions in the reservoir's oil.

Figure A-1. Estimating CO2 Minimum Miscibility Pressure

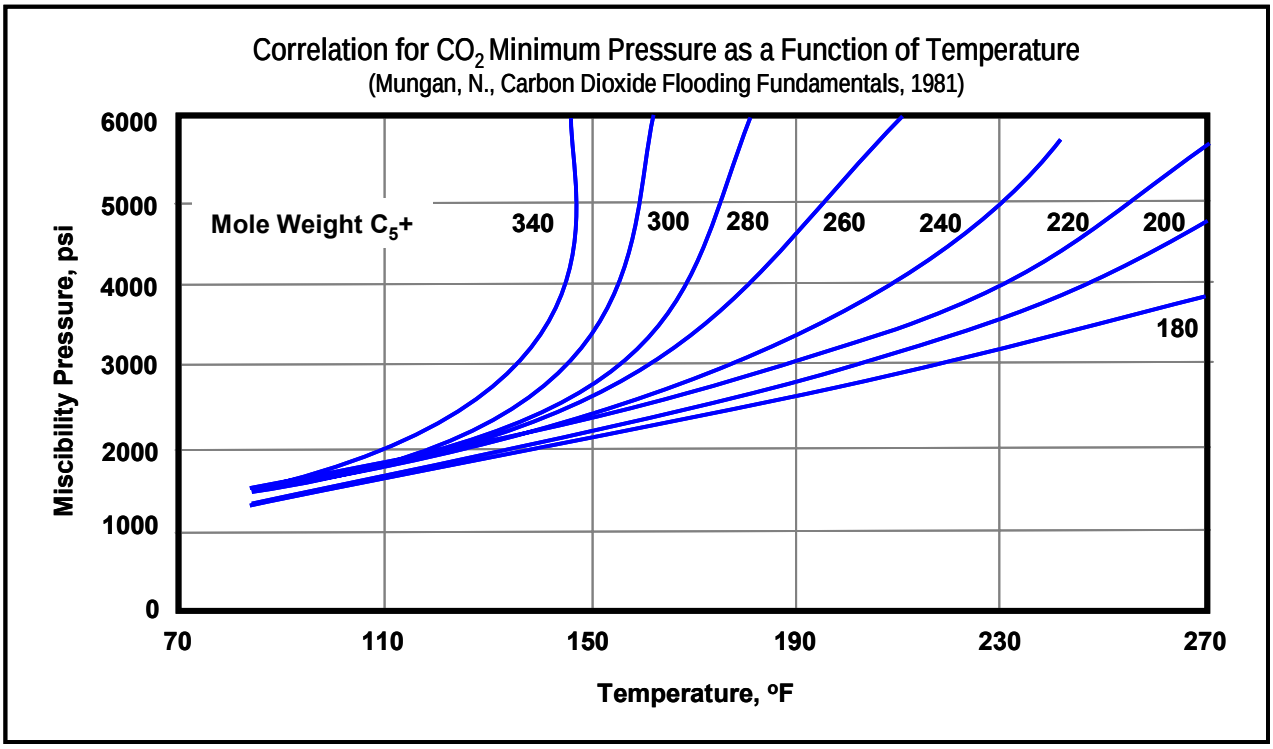

The temperature of the reservoir was taken from the data base or estimated from the thermal gradient in the basin. The molecular weight of the pentanes and heavier fraction of the oil was obtained from the data base or was estimated from a correlative plot of MW C5+ and oil gravity, shown in Figure A-2.

The next step was calculating the minimum miscibility pressure (MMP) for a given reservoir and comparing it to the maximum allowable pressure. The maximum pressure was determined using a pressure gradient of 0.6 psi/foot. If the minimum miscibility pressure was below the maximum injection pressure, the reservoir was classified as a miscible flood candidate. Oil reservoirs that did not screen positively for miscible CO_2-EOR were selected for consideration by immiscible CO_2-EOR.

Figure A-2. Correlation of MW C5+ to Tank Oil Gravity

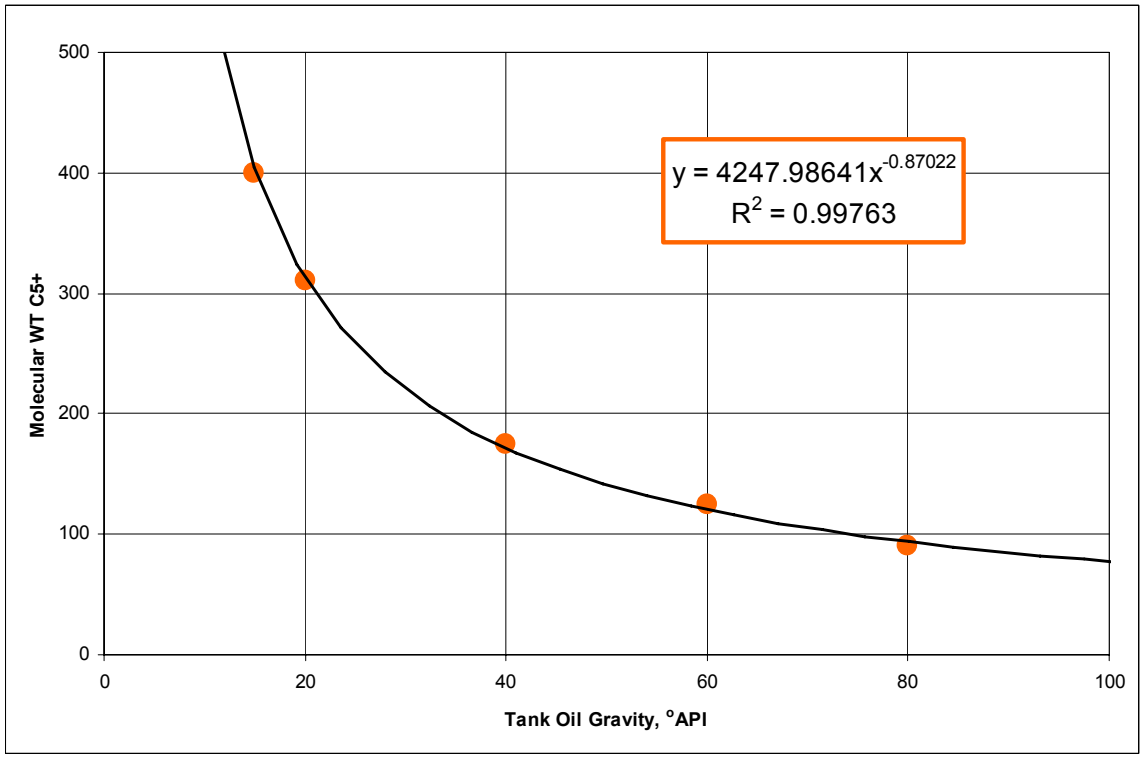

A.4 SCREENING RESERVOIRS FOR CO_2-EOR. The data base was screened for reservoirs that would be applicable for CO_2-EOR. Five prominent screening criteria were used to identify favorable reservoirs. These were: reservoir depth, oil gravity, reservoir pressure, reservoir temperature, and oil composition. These values were used to establish the minimum miscibility pressure for conducting miscible CO_2-EOR and for selecting reservoirs that would be amenable to this oil recovery process. Reservoirs not meeting the miscibility pressure standard were considered for immiscible CO_2-EOR.

The preliminary screening steps involved selecting the deeper oil reservoirs that had sufficiently high oil gravity. A minimum reservoir depth of 3,000 feet, at the mid-point of the reservoir, was used to ensure the reservoir could accommodate high pressure CO_2 injection. A minimum oil gravity of 17.5 °API was used to ensure the reservoir's oil had sufficient mobility, without requiring thermal injection.

A.5 CALCULATING OIL RECOVERY. The study utilized *CO_2-PROPHET* to calculate incremental oil produced using CO_2-EOR. *CO_2-PROPHET* was developed as an alternative to the DOE's CO_2 miscible flood predictive model, *CO_2PM*. According to the developers of the model, *CO_2-PROPHET* has more capabilities and fewer limitations than

CO_2PM. For example, according to the above cited report, *CO_2-PROPHET* performs two main operations that provide a more robust calculation of oil recovery than available from *CO_2PM*:

- *CO_2-PROPHET* generates streamlines for fluid flow between injection and production wells, and
- The model performs oil displacement and recovery calculations along the established streamlines. (A finite difference routine is used for oil displacement calculations.)

Even with these improvements, it is important to note the CO_2-PROPHET is still primarily a "screening-type" model, and lacks some of the key features, such as gravity override and compositional changes to fluid phases, available in more sophisticated reservoir simulators.

A.6 ASSEMBLING THE COST MODEL. A detailed, up-to-date CO_2-EOR Cost Model was developed by the study. The model includes costs for: (1) drilling new wells or reworking existing wells; (2) providing surface equipment for new wells; (3) installing the CO_2 recycle plant; (4) constructing a CO_2 spur-line from the main CO_2 trunkline to the oil field; and, (5) various miscellaneous costs.

The cost model also accounts for normal well operation and maintenance (O&M), for lifting costs of the produced fluids, and for costs of capturing, separating and reinjecting the produced CO_2. A variety of CO_2 purchase and reinjection costs options are available to the model user.

A.7 CONSTRUCTING AN ECONOMICS MODEL. The economic model used by the study is an industry standard cash flow model that can be run on either a pattern or a field-wide basis. The economic model accounts for royalties, severance and ad valorem taxes, as well as any oil gravity and market location discounts (or premiums) from the "marker" oil price. A variety of oil prices are available to the model user.

Appendix B

Incorporation of Economically Feasible CO2 Demand for EOR into the CarBen Model and the Electricity Market Module

Enabling "Early Market Entry" of CCS Technology in the Electric Power Sector

The following three tables in Appendix B provide a synopsis of CarBen's Electricity Market Model (that emulates the EIA NEMS Electricity Market Module) and how revenues from sale of CO2 into the EOR industry could help stimulate "early market entry" of CO2 capture and storage (CCS) by the coal-fueled power sector.

- Table B-1 illustrates how the cost of generating and transmitting electricity, from advanced coal plants (IGCC) and pulverized coal (PC) plants (with and without CCS) changes with time, from 2012 through 2030. Table B-1 then illustrates how the cost offsets from sale of captured CO2 would help reduce the cost of electricity and help make the Advanced Coal with CCS option competitive with coal generated power without CCS.

- Table B-2 illustrates the same changes in costs of electricity now with "accelerated" learning included, from the installation of 49 new advanced coal plants with CCS.

- Table B-3 compares the EIA Reference Case of new coal-fueled power plant builds (with and without CCS) with the Alternative Case involving capture and sale of CO2 by the power industry to the CO2-EOR industry. Table B-2 then summarizes how cost offsets from sale of CO2 (plus "learning") in the Alternative Case would enable a significant number of "early market entries" of power plants with CCS (cumulative):

- 2020 - - 15 GW size plants w/CCS

- 2030 - - 48 GW size plants w/CCS

Table B-1

Economic Implications of Sale of CO2 Without Accelerated "Learning" for Advanced Coal w/CCS in the CarBen Electricity Market Model

- Revenues (cost offsets) from sale of CO2, even without "learning", can make Advanced Coal plants w/CCS more economic than Pulverized Coal or Advanced Coal w/o CCS

Offset Revenue from Sale of CO2 ($/MWh)	2012	2020	2030
CO2-EOR Revenue Offset $35/mt		$ 23.50	$ 23.50
CO2-EOR Revenue Offset $25/mt		$ 16.80	$ 16.80

Competition Among Coal-Fueled Power Generation Options			
	2012	2020	2030
Price of Electricity w/o and w/CCS ($/MWh)			
Pulverized Coal	$ 56.60*	$ 59.70	$ 59.10
Advanced Coal	$ 65.70	$ 62.00	$ 59.30
Advanced Coal w/CCS	$ 86.30	$ 80.80	$ 75.50
Price of Electricity w/CCS and Sale of CO2 ($/MWh)			
Advanced Coal w/CCS & Sale of CO2 at $35/mt	$ 59.60	$ 57.30*	$ 52.00*
Advanced Coal w/CCS & Sale of CO2 at $25/mt		$ 64.00	$ 58.70*

*Least-cost, competitive preferred power generation option

Table B-2

Economic Implications of Sale of CO2 and With Accelerated "Learning" for Advanced Coal w/CCS in the CarBen Electricity Market Model

- Revenues (cost offsets) from sale of CO2, plus "learning", can make Advanced Coal plants w/CCS more economic than Pulverized Coal or Advanced Coal w/o CCS

Offset Revenue from Sale of CO2 ($/MWh)	2012	2020	2030
CO2-EOR Revenue Offset $35/mt		$ 23.50	$ 23.80
CO2-EOR Revenue Offset $25/mt		$ 16.80	$ 16.80

Competition Among Coal-Fueled Power Generation Options			
	2012	2020	2030
Price of Electricity w/o and w/CCS ($/MWh)			
Pulverized Coal	$ 56.60*	$ 59.70	$ 59.10
Advanced Coal	$ 65.70	$ 62.00	$ 59.30
Advanced Coal w/CCS	$ 86.30	$ 74.50	$ 71.60
Price of Electricity w/CCS and Sale of CO2 ($/MWh)			
Advanced Coal w/CCS & Sale of CO2 at $35/mt	$ 59.60	$ 51.00*	$ 48.10*
Advanced Coal w/CCS & Sale of CO2 at $25/mt		$ 57.70*	$ 54.80*

*Least-cost, competitive preferred power generation option

Table B-3

Incorporation of CO2 Sales into the CarBen Electricity Market Model

Reference Case: Coal Power Plant Builds

Reference Case	2012	Δ 2013-20	2020	Δ 2021-30	2030
Cumulative Coal Additions (GW)	12	29	41	80	121
Pulverized Coal	12	22	34	41	75
Advanced Coal (IGCC)	-	7	7	39	46
Advanced Coal (IGCC) w/CCS	-	-	-	-	-

Alternative Case: Coal Power Plant Builds with Sales of CO2 to EOR

After CO2-Sale	2012	Δ 2013-20	2020	Δ 2021-30	2030
Cumulative Coal Additions (GW)	12	29	41	80	121
Pulverized Coal	12	11	23	24	47
Advanced Coal (IGCC)	-	3	3	22	25
Advanced Coal (IGCC) w/CCS	-	15	15	34	49

Appendix C

“Next Generation” CO2 Storage and EOR Technology

“Next Generation” CO2 Storage and EOR Technology

“Next generation” CO2 storage and enhanced oil recovery technology offers the potential for storing significantly larger volumes of CO2 than possible using current practices. Four key technology advances form the heart of “next generation” technology:

- Innovative flood design and well placement, including the application of vertical (gravity stable) CO2 floods, where geologically feasible, as shown on Figure C-1;
- Extensive use of mobility control techniques, to improve the CO2 flood mobility ratio and reservoir contact, in both horizontal and vertical CO2 floods, as illustrated in Figure C-2;
- Even higher volumes of CO2 injection, beyond the 1 HCPV “standard” used in “state-of-the-art” CO2 floods, Figure C-3. This would also entail injecting CO2 into the transition/residual oil zone (TZ/ROZ) and the saline water zone below the main reservoir section, as shown on Figure C-1;
- Making significant investments in “real-time” flood performance diagnostics and control, as illustrated in Figure C-2, using:
  - 4-D seismic;
  - Instrumented observation wells;
  - Zone-by-zone performance information; and
  - Inter-disciplinary technical teams.

To provide an example of how much more CO2 could be stored with EOR, the study used reservoir simulation to examine the application of CO2 storage and EOR in an example for Gulf Coast oil reservoir, geologically favorable for either horizontal (“state-of-the-art”) or gravity stable (“next generation”) CO2-EOR. Table C-1 provides background information on this example oil reservoir. Table C-2 shows that over six times as much CO2 could be stored in this reservoir using “next generation” technology,

enabling the operator to store 1.6 times as much CO2 in the oil reservoir as the CO2 content in the recovered oil.

Figure C-1. Illustration of "Next Generation" Integration of CO2 Storage and EOR

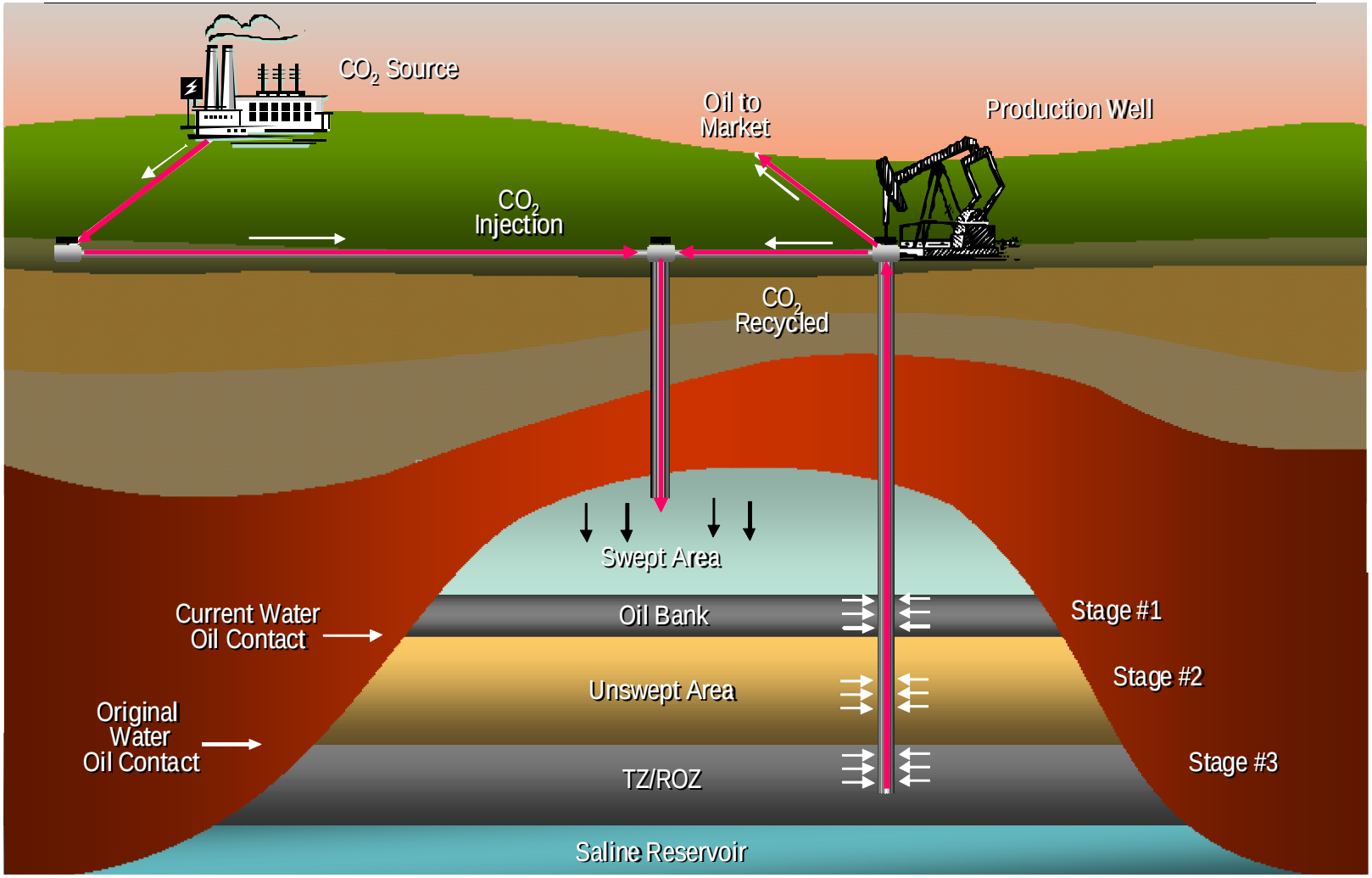

Figure C-2. Impact Of Advanced Mobility Control On CO2-EOR Performance

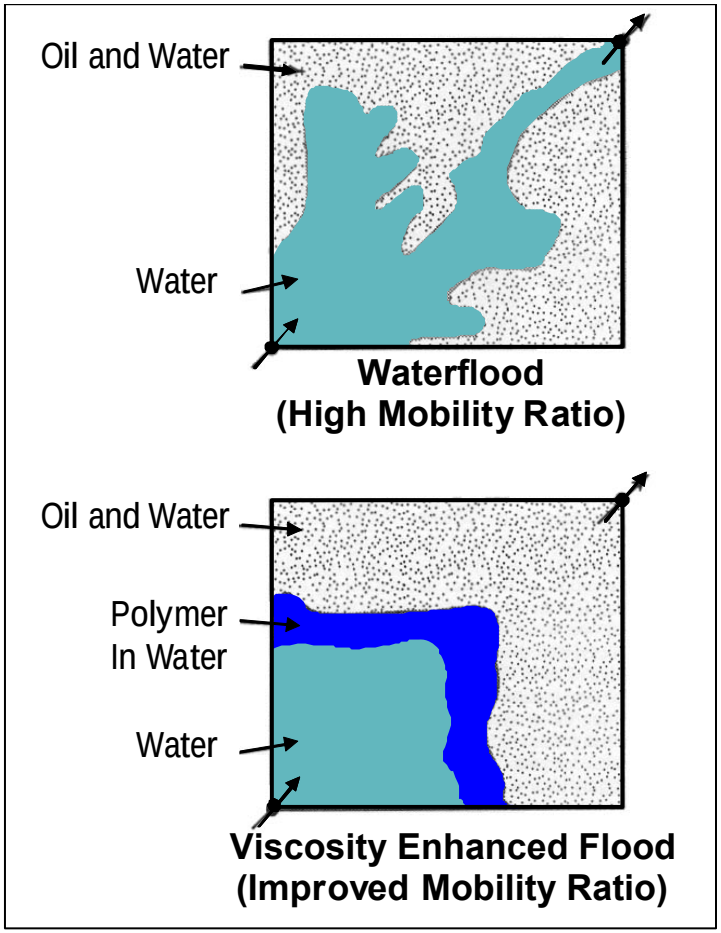

Injected CO_2 achieves only limited contact with the reservoir due to:

- Viscous fingering
- Gravity override

Addition of viscosity enhancers would improve mobility ratio and reservoir contact.

Source: Adapted by Advanced Resources Int'l from "Enhanced Oil Recovery", D.W. Green and G. P. Willhite, SPE, 1998.

JAF02709.PPT

Figure C-3. Impact Of Increased CO2 Injection On CO2-EOR Performance

Sweep Efficiency in Miscible Flooding

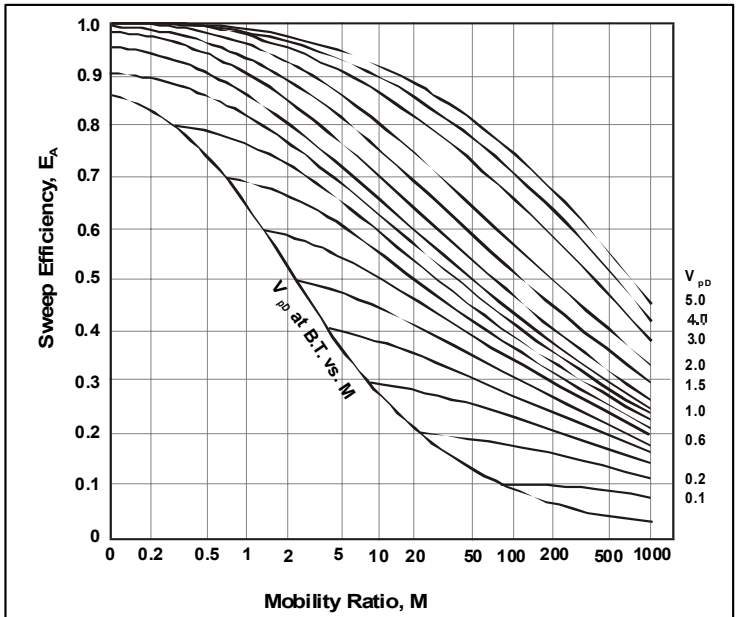

Note: V_{pD} is displaceable fluid pore volumes of CO_2 injected.

Source: Claridge, E.L., "Prediction of Recovery in Unstable Miscible Displacement", SPE (April 1972).

Injected CO_2 vs Oil Recovery

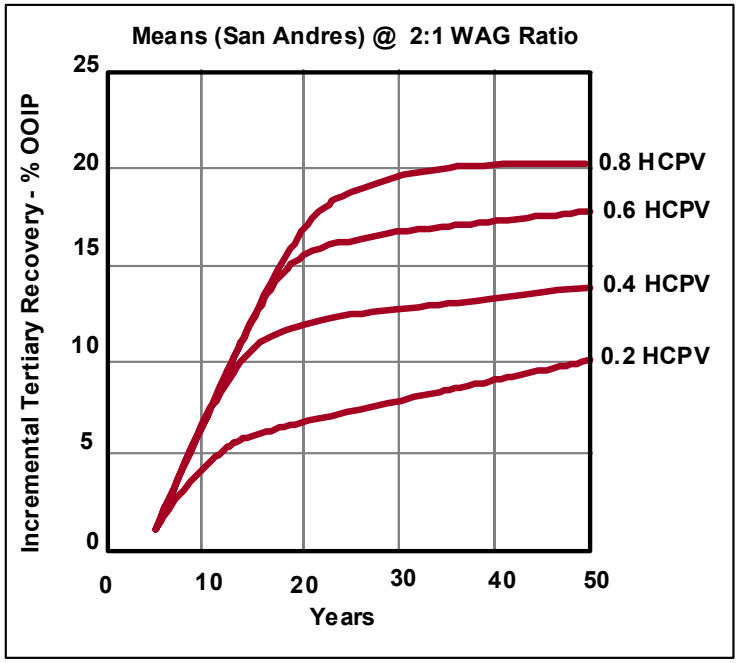

Source: SPE 24928 (1992)

Table C-1. Case Study: Integration of "Next Generation" CO2 Storage with EOR

Case Study: Large Gulf Coast oil reservoir with 340 million barrels (OOIP) in the main pay zone has been selected as the "case study".

- The primary/secondary oil recovery in this oil reservoir is favorable at 153 million barrels, equal to 45% of OOIP. Even with this favorable oil recovery using conventional practices, 187 million barrels is left behind ("stranded").

- In addition, another 100 million barrels of essentially immobile residual oil exists in the underlying 130 feet of the transition/residual oil zone (TZ/ROZ).

- Below the TZ/ROZ is an underlying saline reservoir with 195 feet of thickness, holding considerable CO2 storage capacity.

Based on the above, the theoretical CO2 storage capacity of this oil reservoir and structural closure is 2,710 Bcf (143 million tonnes).

Table C-2. Case Study: Integration of "Next Generation" CO2 Storage with EOR

Producing "Green Oil": Integrating CO2-EOR and CO2 Storage. **With alternative CO2 storage and EOR design, much more CO2 can be stored and more oil becomes potentially recoverable.**

The additional oil produced is "GREEN OIL"*.

	"State of the Art"	"Next Generation"
	(millions)	(millions)
CO_2 Storage (tonnes)	19	109
Storage Capacity Utilization	13%	76%
Oil Recovery (barrels)	64	180
% Carbon Neutral ("Green Oil")	80%	160%

JAF02709.PPT

*"Green Oil" means that more CO_2 is injected and stored underground than the volume of CO_2 contained in the produced oil, once burned.

FREQUENTLY ASKED QUESTIONS ABOUT CARBON SEQUESTRATION AND EARTHQUAKES

William Foxall and S. Julio Friedmann, LLNL

Q. What is Carbon Sequestration?

A. Carbon sequestration is a key technology to reduce greenhouse gas emissions and climate change impacts. The process takes carbon dioxide (CO_2) from a fossil energy power plant or large emission source, compresses the CO_2 to a near liquid state, transports it via pipeline to a site where it is injected deep underground. The deep geological formations that receive and hold CO_2 are far below fresh water aquifers and below an impermeable cap rock or seal. Ideal geological formations for sequestration include depleted oil and gas fields, where oil and gas has been sequestered naturally for millions of years. For the most part, sequestration involves putting CO_2 back into the same formations formerly occupied by oil and gas before they were extracted, more than half a mile below the earth's surface.

Q. What causes earthquakes to occur?

A. Slow movement deep in the Earth causes stresses to build up within its brittle outer crust. An earthquake occurs when the stress that has accumulated over perhaps hundreds to thousands of years is relieved in a few seconds by causing failure and slip on a fault. A fault is a narrow zone of weakness within the crust. Friction prevents slip along this zone until the crustal stress exceeds its frictional strength. The crust is composed of a mosaic of tectonic plates, and earthquakes occur most frequently along the giant fault zones - such as the San Andreas fault system in California - that form the boundaries of the plates. Earthquakes also occur within plate interiors, but generally at a much lower rate. The size of an earthquake, measured by the Richter magnitude scale, depends on the size of the fault break. For example, the1906 magnitude 7.8 San Francisco earthquake broke about 300 miles of the San Andreas fault, whereas a magnitude 4 earthquake would break a fault patch only about 500 yards long (magnitude 3 earthquakes or less often are not felt at the surface). The largest earthquake that can occur in a particular region is therefore limited by the maximum length of the faults there, but there is no lower limit to earthquake size. On average, in a particular region, earthquakes of a given magnitude occur about 10 times less frequently than earthquakes one magnitude unit smaller. For example, if a magnitude 7 earthquake occurs in a plate boundary region every 200 years, then we would expect a magnitude 6 about every 20 years, a magnitude 5 every 2 years, and 5,000 magnitude 1 earthquakes per year.

Q. Can human activity cause earthquakes to occur?

A. Yes. Human activity such as building dams, mining, nuclear weapons testing, oil and gas extraction, and fluid injection can induce seismic events. These activities can change the stress within the crust and cause slip along faults. Earthquakes induced by fluid injection are caused by increasing the fluid pressure at depth. This lowers the frictional resistance on faults and may cause them to slip under the existing stress loading, which would normally be too low to cause failure. Deformation of a pressurized reservoir can also induce stresses in the surrounding rock that add to the existing stress loading on faults or fractures causing them to slip (commonly, these faults are small). Like naturally-occurring (tectonic) earthquakes, the vast majority of induced earthquakes are much too small (less than magnitude 3) to be felt or to cause damage, and can be detected only by sensitive instruments. On rare occasions, however, fluid injection has induced moderate (magnitude 3.5 to 5.5) felt earthquakes that in a few cases have caused damage. Most of these cases have been studied in detail, and shown to be due to circumstances that can be avoided through proper site selection and injection design and operation.

Document number: LLNL-BR-408445. This work performed under the auspices of the U.S. Department of Energy by Lawrence Livermore Natl Lab under Contract DE-AC52-07NA27344

The oil and gas industry has injected billions of tons of water, gas, and CO_2 in to the Earth's crust over the decades to enhance oil production, for natural gas storage, or for environmental management. This experience has taught that the level of seismic activity induced by fluid injection can be limited and controlled, and that earthquakes large enough to have adverse consequences can be prevented altogether. A few key steps are critical:

- First of all, detailed geological and tectonic characterization of a potential injection field and the surrounding region is essential. This enables operators to determine the existing stress conditions in the crust and to locate and characterize active and potentially active faults and fracture zones.
- Injection wells must be located to avoid fault zones which show a high potential for failure and slip. Injection operations should be carefully designed to keep fluid pressures low enough to avoid adverse events.
- Large injection operations should be carefully monitored. A variety of hydrological and geophysical techniques, including downhole pressure measurements and sensitive seismic instruments exist to detect and characterize small microearthquakes and stress changes. Continuous monitoring during and after injection allows operators to make timely adjustments that can mitigate potential problems and improve site performance.

Q. Why should we put fluids underground?
A. The energy industry, including oil, gas, and power companies, has been injecting fluids such as water, steam, CO_2 and nitrogen for many decades. Some of this injection goes into oil and gas fields to increase production, a process known as Enhanced Oil Recovery (EOR). In addition, injection is used to prevent ground subsidence due to oil and gas withdrawal and to avoid discharge of produced brines at the surface. Other fluids such as natural gas are injected underground for storage for use during peak power demand periods. The purpose of sequestering CO_2 underground permanently is to prevent CO_2 from entering the atmosphere and thereby contributing to global climate change. CO_2 stripped from oil or gas as it is pumped out can be injected back into depleted section of the reservoir, serving both to store the CO_2 and to enhance recovery of the remaining oil or gas.

Q. What happens to sequestered CO_2 during an earthquake: Can it escape quickly?
A. Once in the deep formations, CO_2 stays in a liquid (supercritical) state due to high pressure. CO_2 in this state is trapped in the very small (less than 1 millimeter) pore spaces between the grains of rock that make up underground reservoir formations. An overlying impermeable layer of "cap rock" serves as a barrier to prevent CO_2 from escaping.

Even in highly active region like California the vast bulk of the original oil and gas reserves has remained in place over millions of years through many earthquake cycles. As an example, the Elk Hills oilfield currently holds gas volumes roughly ten times larger than the proposed CO_2 injection volume at that site. Except for an earthquake that involves fault slip actually within the overburden, the rock deforms elastically during an earthquake so that its integrity is not compromised. For example, monitoring of the sequestration site in Nagaoka, Japan revealed no evidence for leakage following a recent magnitude 6.8 earthquake 14 miles from the site. The small potential for slip (tectonic or induced) on faults in the overburden to create leakage pathways to the surface can be minimized by careful siting and operational design.

The most likely potential CO_2 leakage paths would be injection wells. However, these are carefully designed to prevent leakage.

Document number: LLNL-BR-408445. This work performed under the auspices of the U.S. Department of Energy by Lawrence Livermore Natl Lab under Contract DE-AC52-07NA27344

Q. How does an earthquake affect oil and gas production wells and injection wells?
A. Modern wells are designed to withstand seismic deformations. They are constructed from flexible steel casing designed to deform but not rupture from distortions much larger than those caused by the passage of seismic waves from earthquakes except very close to the earthquake source. Several oil and gas fields throughout Southern California and the San Joaquin basin have experienced major nearby earthquakes with relatively few problems. For example, only 14 of 1,725 active wells within the oilfields close to the 1983 magnitude 6.8 Coalinga earthquake suffered collapsed or parted well casings.

Q. Can oil wells be repaired after an earthquake?
A. In some cases, damaged oil wells can be recompleted (repaired) and reused even after a large earthquake. In other cases, the well cannot be repaired, but can be plugged (sealed). It is common to plug or recomplete wells that have failed due to crustal deformation, and there are many companies in the US and abroad who are experienced in recompleting wells in seismically active regions.

Q. At what depth in the earth's crust do tectonic earthquakes occur and how far is this from where CO_2 will be injected?
A. Most moderate or large tectonic earthquakes nucleate many miles beneath the Earth's surface. Major earthquakes (magnitude 6 and above) in California, for example, occur primarily in strong, brittle basement rock at depths on the order of 6 miles or more (although very small earthquakes occur at depths as shallow as 2 miles). Earthquakes in other some regions on Earth can occur at much greater depths. The oil and gas reservoirs to be used for CO_2 sequestration projects are typically located at depths less than 15,000 feet (3 miles) and no injection is made into basement rocks, which generally have low permeability. Since the strength of seismic waves decreases with distance, the large vertical separations between the sources of significant earthquakes and injection reservoirs is a major factor preventing well damage. In-depth research (notably into the 1983 Coalinga earthquake) indicates that it is highly unlikely that fluid injection or extraction can trigger major tectonic earthquakes.

Q. What threat does sequestered CO_2 pose to humans and the environment, especially in regards to an earthquake?
A. CO_2 is a non-toxic, non-flammable and otherwise harmless gas that we breathe in and out every day. It is a basic compound that sustains life on Earth by nourishing plant life by photosynthesis. Food grade CO_2 is found in carbonated drinks and is used in flash-freezing . The only direct risk of harm from CO_2 is when a high concentration resulting from inadequate ventilation displaces oxygen and causes asphyxiation.

In recorded history there have been rare, natural occurrences of rapid, high volume releases of CO_2 due to volcanic activity and volcanic lake processes that have harmed plants, animals, and people. However, the circumstances under which these releases occurred are quite different from those of industrial carbon sequestration. Commercial carbon sequestration sites are selected on the basis of careful study, and by design lack pathways that can bring CO2 quickly to the surface. Sequestration sites are also subject to extensive monitoring and oversight. Therefore, a large, threatening release of CO_2 is extremely unlikely and in many cases demonstrably not possible.

Dr. William Foxall is a geophysicist and an expert in rock mechanics and seismic hazard assessment. Dr. S. Julio Friedmann is a geologist and geophysicist specializing in carbon capture and sequestration.

Document number: LLNL-BR-408445. This work performed under the auspices of the U.S. Department of Energy by Lawrence Livermore Natl Lab under Contract DE-AC52-07NA27344

Oxy CO_2 Project

Injection Permit Request

October 2009

Appendix A, B, C, D, E

Appendix A

Elk Hills Stevens CO_2 Class II UIC Permit Supplement

Appendix B

DOGGR Dual Steamflood / CO_2 Project Stevens Zone Permit #22800021 and DOGGR Dual Steamflood / Waterflood Project Stevens Zone Permit #22800006

Appendix C

Completion and status map of all wells that have penetrated the Reef Ridge Shale indicating active or inactive producers and injectors, and abandoned wellbores.

Appendix D

Wellbore and casing diagrams of all wells within a ¼ mile of the proposed permit area which penetrate the Reef Ridge Shale

Appendix E

List of wells within a ¼ mile radius of the proposed permit area that do not penetrate the Reef Ridge Shale.

Appendix A

This appendix provides supplemental information pertaining to the long-term storage (sequestration) of CO_2 that will occur as a result of the Oxy CO_2 Project. Data presented in this appendix is intended to represent not only the initially proposed permit area, but the full life of the project.

CO_2 EOR and Storage Project

Occidental of Elk Hills, Inc. (OEHI) intends to implement CO_2 Enhanced Oil Recovery (EOR) to increase oil and gas production and reserves from the Stevens reservoirs within the Elk Hills Unit. The OXY CO_2 Project will utilize CO_2 from the Hydrogen Energy California (HECA) project, which will be located near the Elk Hills Unit. The HECA project will generate CO_2 from an Integrated Gasification Combined Cycle (IGCC) power plant. During normal operations, the HECA project is expected to deliver an annual average rate of a 110 million standard cubic feet per day (MMSCF/d) of CO_2 (approximately 2.2 million tons per year) to Elk Hills, where it will be utilized in a miscible EOR recovery process.

CO_2 EOR

Permitting of CO_2 injection associated with EOR operations is well established and regulated by the California Division of Oil, Gas and Geothermal Resources (DOGGR) under authority granted through EPA's existing Underground Injection Control (UIC) Class II regulations. Under California law, DOGGR has responsibility for permitting injection and extraction wells and associated well facilities for the OXY CO_2 Project. . The wells to be used for CO_2 injection are Class II injection wells. DOGGR has been given primacy to permit Class II injection wells in the state of California under the Underground Injection Control ("UIC") program pursuant to Section 1425 of the Federal Safe Drinking Water Act, 42 U.S.C. § 300h-4, *See* 48 Fed. Reg. 6336 (Feb. 11, 1983). The wells and associated well facilities will be permitted pursuant to authority provided to DOGGR in the Public Resources Code and in accordance with applicable DOGGR regulations. *See generally* Cal. Pub. Res. Code Division 3, Chapter 1 and 14 Cal. Code Regs. Division 2. DOGGR has statutory responsibility under Division 3 of the Public Resources Code to regulate all oilfield operations in the State of California.

The UIC regulations have been developed to ensure the protection of underground sources of drinking water (USDW) and safety of the public. The Elk Hills Field is unique in that the only aquifer that meets the total dissolved solids criteria for being an underground source of drinking water is exempt from UIC regulation. This exempt reservoir is defined as a producing unit in the California Oil and Gas Fields (Vol 1). In 2004, DOGGR granted permit #22800022, allowing injection of disposal water into this reservoir.

CO_2 Storage

In addition to satisfying the above described EOR permitting requirements, OEHI has considered the sequestration aspects of EOR including:

- **Reservoir (Site) Characterization -** confirming isolation of injectant below the lowermost USDW, validating injection and storage capability of the storage site, identifying potential leakage pathways, and assessing risk potential;
- **Well and Facility Operations -** identifying surface and subsurface equipment requirements, developing and implementing programs for mechanical integrity and safe operation of equipment, and identifying specific injection limits to maintain the integrity of the reservoir and confinement zone;
- **Monitoring, Measurement and Verification (MMV) -** assessing the performance of the sequestration site (geology and technology), and validating anticipated behavior;
- **Closure** - developing and implementing programs for plugging and abandonment, identifying reservoir characteristics required to demonstrate non-endangerment and developing and implementing a post-injection MMV program to demonstrate non-endangerment.

The above described activities represent various components of a single strategy that will ensure safe and secure implementation and operation of the Oxy CO_2 Project at Elk Hills Field. The following sections further discuss specific activities related to these individual components.

Reservoir (Site) Characterization

Reservoir Containment

A primary objective of existing UIC Class II rules is to ensure containment of injected CO_2 (and water) within the target formation. Evaluation of the risk associated with potential leakage pathways (if any) verifies the appropriateness of the site for CO_2 injection. The reservoir characterization work (documented in the injection permit request) includes analysis of:

- CO_2 injection pilot that confirmed containment of CO_2 in the Stevens reservoir
- Stratigraphy, structure, depth, thickness, pressure, porosity, geomechanical and fluid flow properties of the storage reservoirs and confining zone
- Sealing capacity of the confining zone
- Natural and induced seismicity (See: HECA regional seismicity study for the Elk Hills Field in Appendix F of HEI AFC Application)
- Absence of transmissive faults that intersect the confining zone in an area which may be impacted by CO_2
- Well construction and plugging history of all wells which penetrate the confining zone

- Compositional analysis of injection and reservoir fluids.
- Evaluation and modeling of all potential CO_2 trapping mechanisms.

<u>CO_2 Trapping Mechanisms</u>

In addition to physical trapping from the confining zone, various other mechanisms exist that will trap CO_2 in the Stevens reservoirs. The key trapping mechanisms that occur in the subsurface to indefinitely sequester the CO_2 include physical trapping, residual trapping and geochemical trapping.

- Physical trapping (and trap filling) retains the CO_2 in the formation using structural and stratigraphic traps with low permeability formations and faults. Physical trapping of the CO_2 is provided by the same impermeable caprock seal described in the permit, that has trapped the oil and hydrocarbon gases for millions of years.
- Residual trapping of the liquid or gaseous CO_2 occurs as a result of capillary forces permanently retaining some of the CO_2 as disconnected droplets. Residual trapping is analogous to residual oil saturation (i.e. "trapped" oil) that remains after an oil reservoir is swept with injected water.
- Geochemical trapping describes a series of reactions of CO_2 with natural fluids and minerals in the target formation, principally consisting of CO_2 dissolution in brine and oil (i.e., solubility trapping), CO_2 precipitation as mineral phases (i.e., mineral trapping) and CO_2 adsorption onto mineral surfaces. Scientific research is continuing to increase the understanding of the chemical processes involved in geochemical trapping.

These trapping mechanisms operate on different time scales, beginning with initial injection of CO_2 and have different capacities to trap CO_2. The following schematic depicts the various trapping mechanisms and time horizons.

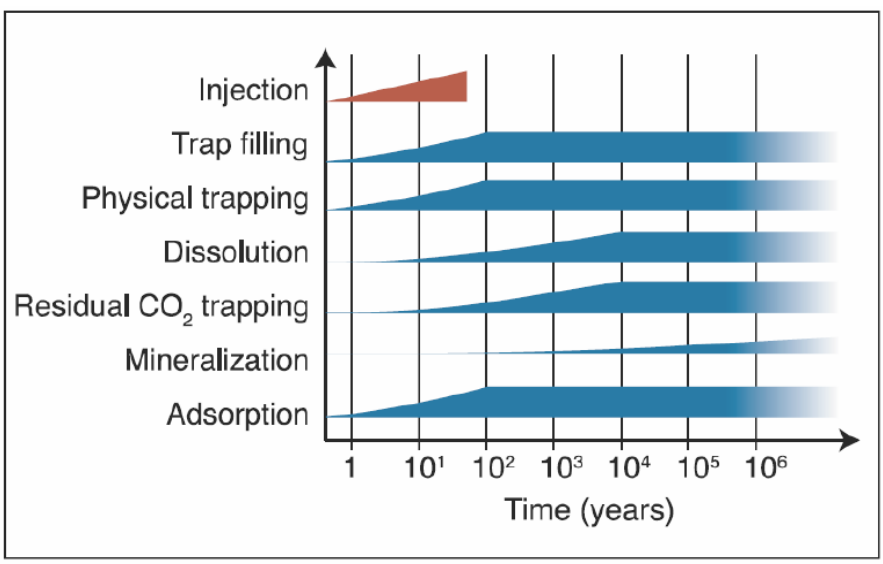

Source: Metz, B.E.A., 2005, *Special Report on Carbon Dioxide Capture and Storage*. Intergovernmental Panel on Climate Change, Cambridge University Press, Cambridge, England. <http://arch.rivm.nl/env/int/ipcc/pages_media/SRCCS-final/SRCCS_Chapter4.pdf>.

Schematic shows the time evolution of various CO_2 sequestration mechanisms operating in deep formations during and after injection. Time is shown on an exponential scale were 10^1 is 10 years, 10^2 is 100 years, and so on.

Reservoir Capacity

In addition to data presented in the DOGGR UIC permit application confirming containment of CO_2 in the Stevens reservoirs, OEHI's site characterization work confirms that the Stevens reservoirs have sufficient volume to store all expected CO_2 deliveries from the HECA project. Historic Elk Hills production records and injection data show that the volume of oil, gas, and water already extracted from the target injection zones exceeds the volume required to store the cumulative (full-life) volume of CO_2 expected from the HECA Project. In addition, oil production during the CO_2 EOR project phase will create further capacity for CO_2 storage. Available capacity is demonstrated in the following tables.

- Stevens Pore Volume Capacity

  The Stevens reservoirs within the 31S and North West Stevens (NWS) structures have been identified as the EOR and storage reservoirs for the Oxy CO_2 Project. These reservoirs contain sufficient pore volume to occupy the injection of more than twenty years of expected CO_2 delivery from the HECA Project.

	Billion Reservoir Barrels
31S Structure - Total Stevens Pore Volume:	> 7.5
Required Storage Capacity for 20 Years of Expected CO2 Injection:	< 1.0

- Cumulative voidage to date, from 31S and NWS Stevens reservoirs

  The table below shows that the net cumulative fluid volume produced to date, from Stevens reservoirs on the 31S and NWS structures, exceeds the volume required to store the CO_2 volume expected from the HECA Project.

	Billion Reservoir Barrels
Cumulative Fluid[1] Volume Produced:	> 3.4
Cumulative Fluid[1] Volume Injected:	< 2.1
Cumulative Net Fluid[1] Volume Produced:	> 1.3
Required Capacity to Storage 20 Years of Expected CO_2 Injection:	< 1.0

[1] Includes oil, gas, and water

In addition to the available storage volume calculated above, during EOR operations the production of oil, gas, and water will create further reservoir voidage that will allow injection and storage of additional CO_2.

Well and Facility Operations

Occidental Petroleum Corporation is one of the largest and most respected CO_2-EOR operators in the world and is the largest oil producer in the Permian Basin, operating many CO_2-EOR projects that include thousands of wells. This expertise will be utilized in planning and executing the proposed CO_2 injection project. A primary objective during all CO_2-EOR well operations is to ensure that wells are constructed in a fashion that prevents fluids from entering a USDW and injection is controlled such that injected fluids are confined within the injection interval, such that the confining layer is not damaged. OEHI operations have addressed the following items:

- Regulation of injection pressure and volume
- Analysis of the chemical, physical and radiological and biological characteristics of the injection fluid
- Regulation of the depth and method of injection
- Regulation of wellbore construction covering hole diameter, casing and cementing materials, depth of perforation and isolations
- Specific logging and testing requirements for newly constructed wells.
- Preparation of contingency plans to cope with well shut-ins or failures
- Mechanical integrity testing

Monitoring, Measurement and Verification (MMV)

MMV will be an integral part operating the Oxy CO2 Project. The MMV requirements will achieve key sequestration objectives: (1) ultimate containment of the stored CO_2; (2) protection of human health and the environment; (3) confirmation that the injected CO_2 is behaving as planned; and (4) fulfillment of all applicable regulatory requirements.

Elk Hills benefits from the presence of numerous producing wells, including many wells producing from horizons above and below the Stevens reservoirs. These wells will act as observation points to provide immediate evidence of predicted and/or unpredicted subsurface CO_2 movement. Observed real-time data from these wells will be gathered from existing and new wellbores through the following processes:

- Monitoring of wellhead and annular pressures of wells completed in the Stevens reservoirs, supplemented by downhole pressure and temperature where available.
- Monitoring of wellhead and annular pressures of wells completed in reservoirs vertically adjacent to the Stevens reservoirs, supplemented by downhole pressure and temperature measurements in these offset reservoirs where available.
- Well integrity monitoring, including cement bond logging upon initial well completion.
- Produced fluid compositional analysis.

In addition to the large amount of direct MMV data that will be gathered, OEHI will engage in the follow containment verification activities:

- Characterization of rock stress and strength through acquired geomechanical data.

- Material Balance analysis.
- Static and dynamic subsurface modeling to characterize migration of injected fluids through the reservoir.
- Monitoring plan for collection of subsurface pressure, reservoir fluid chemistry and other data as necessary to demonstrate and predict behavior of the injected CO_2.
- A leak detection plan that will include monitoring of wells and produced fluids in reservoirs adjacent to the Stevens reservoirs to provide early detection of any CO_2.

Closure

The closure phase of a CO_2 EOR and Sequestration project consists of site decommissioning, well plugging and abandonment, and appropriate post-injection site care and monitoring to demonstrate that the injected CO_2 is properly contained within the confinement zone and is not endangering USDWs, human health or the environment. Existing Class II EOR Closure requirements cover plugging and abandonment of wells. In addition, site closure at the Elk Hills Field will be conducted pursuant to a DOGGR approved performance-based post-injection site care and closure plan specifically tailored to the Elk Hills field. Anticipated elements of the plan include:

- Continued monitoring in a portion of the wells during the closure period to demonstrate non-endangerment.
- For all other wells, plug and abandon according to regulatory standards to ensure project integrity, unless site-specific conditions warrant special materials or procedures. (Perform a final assessment of the cement bond log across the primary sealing interval of all operational wells within the injection footprint prior to plugging, as well as standard mechanical integrity and pressure testing.)
- Assemble a comprehensive set of data describing the location, condition, plugging, and abandonment procedures, and any integrity testing results for wells that will be potentially affected by the storage project.
- Satisfactory completion of post-injection monitoring to demonstrate:
    - the estimated magnitude and extent of the project footprint (CO_2 boundaries and area of elevated pressure);
    - that CO_2 boundaries and pressure changes match predictions;
    - the estimated location of any free phase CO_2 based on measurement;
    - either (a) no evidence of significant leakage of injected or displaced fluids into formations outside the confining zone, or (b) the integrity of the confining zone;
    - that, based on the most recent geologic understanding of the site, including monitoring data, the injected or displaced fluids are not expected to migrate in the future in a manner that encounters a potential leakage pathway; and
    - that wells at the site are not leaking and have maintained integrity.
- The site-specific risk assessment will be updated based on operational data and observations during closure.

STATE OF CALIFORNIA-RESOURCES AGENCY

GEORGE DEUKMEJIAN, Governor

DEPARTMENT OF CONSERVATION
DIVISION OF OIL AND GAS
4800 STOCKDALE HWY., SUITE # 417
BAKERSFIELD, CALIFORNIA 93309
(805) 322-4031

November 6, 1989

BK10901887
IRON MOUNTAIN

Mr. E. F. Gill
BECHTEL PETROLEUM OPERATIONS, INC.
P. O. Box 127
Tupman, CA 93276

DUAL STEAMFLOOD/WATERFLOOD PROJECT PERMIT
Elk Hills Field
Stevens (Western 31S Structure) Zone
Sec. 2,3,4,5,6, T.31S., R.24E.
Sec. 23,24,25,26,36, T.30S., R.23E.
Sec. 29,30,31,32,33,34,35,36, T.30S., R.24E.

Dear Mr. Gill:

The continuance of the above designated project is approved provided that:

1. Notices of intention to drill, redrill, deepen, rework, or abandon, on current Division forms (OG105, OG107, OG108) shall be completed and submitted to the Division for approval whenever a new well is to be drilled for use as an injection well and whenever an existing well is converted to an injection well, even if no work is required on the well.

2. This office shall be notified of any anticipated changes in a project resulting in alteration of conditions originally approved, such as: increase in size, change of injection interval, or increase in injection pressures. Such changes shall not be carried out without Division approval.

3. A monthly Injection Report shall be filed with this Division on our Form OG110B on or before the last day of each month, for the preceding month, showing the amount of fluid injected, and surface pressure required for each injection well.

4. A chemical analysis of the fluid to be injected shall be made and filed with this Division whenever the source of injection fluid is changed, or as requested by this office. ALL FLUIDS MUST MEET CLASS II CRITERIA.

5. All fluid sampling and analyses required by this Division are done in accordance with the provisions of the Division's Quality Assurance Program. Please refer to the Division's "Notice to Oil and Gas Operators" dated: November 17, 1988 (Attached).

6. An accurate, operating pressure gauge or pressure recording device shall be available at all times, and all injection wells shall be equipped for installation and operation of such gauge or device. A gauge or device used for injection-pressure testing, which is permanently affixed to the well or any part of the injection system, shall be calibrated at least every six months. Portable gauges shall be calibrated at least every two months. Evidence of such calibration shall be available to the Division upon request.

7. All injection wells shall be equipped with tubing and packer set immediately above the approved zone of injection upon completion or recompletion, unless a variance to this requirement has been granted by this office.

8. Injection profile surveys for all fluid injection wells shall be filed with the Division within three (3) months after injection has commenced, once every two years thereafter, after any significant anomalous rate or pressure change, or as requested by the Division, to confirm that the injection fluid is confined to the proper zone or zones. This monitoring schedule may be modified by the district deputy. This office shall be notified before such surveys are made, as surveys may be witnessed by the Division inspector.

9. Data shall be maintained to show performance of the project and to establish that no damage to life, health, property, or natural resources is occurring by reason of the project. Injection shall be stopped if there is evidence of such damage, of loss of hydrocarbons, or upon written notice from the Division. Project data shall be available for periodic inspection by Division personnel.

10. The maximum allowable injection pressure gradient is limited to 0.80 psi per foot of depth as measured at the top perforation. Prior to any sustained injection above this gradient, rate-pressure tests shall be made. The test shall begin at the hydrostatic gradient of the injection fluid to be used and shall continue until either the intended maximum injection pressure is reached or until the formation fractures, whichever occurs first. The results of these tests shall be submitted to this Division for approval.

11. All injection piping, valves, and facilities shall meet or exceed design standards for the injection pressure and shall be maintained in a safe and leak-free condition.

12. Any remedial work needed as a result of this project on idle, abandoned, or deeper zone wells in order to protect oil, gas, or freshwater zones, shall be the responsibility of the project operator.

13. Additional data will be supplied upon the request of the Division.

Yours truly,

David Mitchell

E. A. Welge
Deputy Supervisor

cc: RWQCB
UIC file

STATE OF CALIFORNIA--THE RESOURCES AGENCY
ARNOLD SCHWARZENEGGER, Governor

DEPARTMENT OF CONSERVATION
4800 STOCKDALE HWY, SUITE 417
BAKERSFIELD, CALIFORNIA 93309
(661) 322-4031
FAX: (661) 861-0279

RECEIVED
FEB 26 2004
BY:

February 25, 2004

BK10919027
IRON MOUNTAIN

CONFIDENTIAL

Supercedes Letter Dated 2/17/2004

Mr. Robert A. Joseph
Occidental of Elk Hills, Inc.
P.O. Box 1001
Tupman, CA 93276

DUAL WATERFLOOD/CO2 PROJECT PERMIT
Elk Hills Field
Stevens (31S) Zone
Sec. 35, T.30S., R.24E

Project Code:22800021
Max. Permitted Volume: 2,000 B/D Water/
4.0 MMCFD CO2
Max. Permitted Well(s): 1
Note:Notify this office if either
of these values is exceeded.

Dear Mr. Joseph:

The initiation of the project designated above is approved provided:

1. Notices of intention to drill, redrill, deepen, rework, or abandon, on current Division forms (OG105, OG107, OG108) shall be completed and submitted to the Division for approval whenever a new well is to be drilled for use as an injection well and whenever an existing well is converted to an injection well, even if no work is required on the well.

2. This office shall be notified of any anticipated changes in a project resulting in alteration of conditions originally approved, such as: increase in size, change of injection interval, or increase in injection pressures. Such changes shall not be carried out without Division approval.

3. A monthly Injection Report shall be filed with this Division on our Form OG110B on or before the last day of each month, for the preceding month, showing the amount of fluid injected, and surface pressure required for each injection well.

4. A chemical analysis of the fluid to be injected shall be made and filed with this Division whenever the source of injection fluid is changed, or as requested by this office. ALL FLUIDS MUST MEET CLASS II CRITERIA.

5. All fluid sampling and analyses required by this Division are done in accordance with the provisions of the Division's Quality Assurance Program. Please refer to the Division's "Notice to Oil and Gas Operators" dated: November 17, 1986.

6. An accurate, operating pressure gauge or pressure recording device shall be available at all times, and all injection wells shall be equipped for installation and operation of such gauge or device. A gauge or device used for injection pressure testing, which is permanently affixed to the well or any part of the injection system, shall be calibrated at least every six months. Portable gauges shall be calibrated at least every two months. Evidence of such calibration shall be available to the Division upon request.

7. All injection wells shall be equipped with tubing and packer set immediately above the approved zone of injection upon completion or recompletion, unless a variance to this requirement has been granted by this office.

8. A Standard Annular Pressure Test (SAPT) shall be run, as outlined in the Notice to Operators dated 1/9/90, prior to injecting into any well(s) being drilled or reworked for the purpose of injection or as requested by the Division. The Division shall be notified to witness such tests.

9. Injection profile surveys for all fluid injection wells shall be filed with the Division within three (3) months after injection has commenced, once every two (2) years thereafter, after any significant anomalous rate or pressure change, or as requested by the Division, to confirm that the injection fluid is confined to the proper zone or zones. This monitoring schedule may be modified by the district deputy. This office shall be notified before such surveys are made, as surveys may be witnessed by the Division inspector.

10. Data shall be maintained to show performance of the project and to establish that no damage to life, health, property, or natural resources is occurring by reason of the project. Injection shall be stopped if there is evidence of such damage, of loss of hydrocarbons, or upon written notice from the Division. Project data shall be available for periodic inspection by Division personnel.

11. The maximum allowable injection pressure gradient is limited to 0.8 psi per foot of depth as measured at the top perforation. Prior to any sustained injection above this gradient, rate-pressure tests shall be made. The test shall begin at the hydrostatic gradient of the injection fluid to be used and shall continue until either the intended maximum injection pressure is reached or until the formation fractures, whichever occurs first. These tests shall be witnessed, unless otherwise instructed, and the test results submitted to this Division for approval.

12. All injection piping, valves, and facilities shall meet or exceed design standards for the injection pressure and shall be maintained in a safe and leak-free condition.

13. Any remedial work needed as a result of this project on idle, abandoned, or deeper zone wells in order to protect oil, gas, or freshwater zones, shall be the responsibility of the project operator.

14. Additional data will be supplied upon the request of the Division.

Sincerely,

Randy Adams

Randy Adams
Deputy Supervisor
Division of Oil, Gas, and Geothermal Resources

cc: RWQCB UIC file
uic\wp\wf

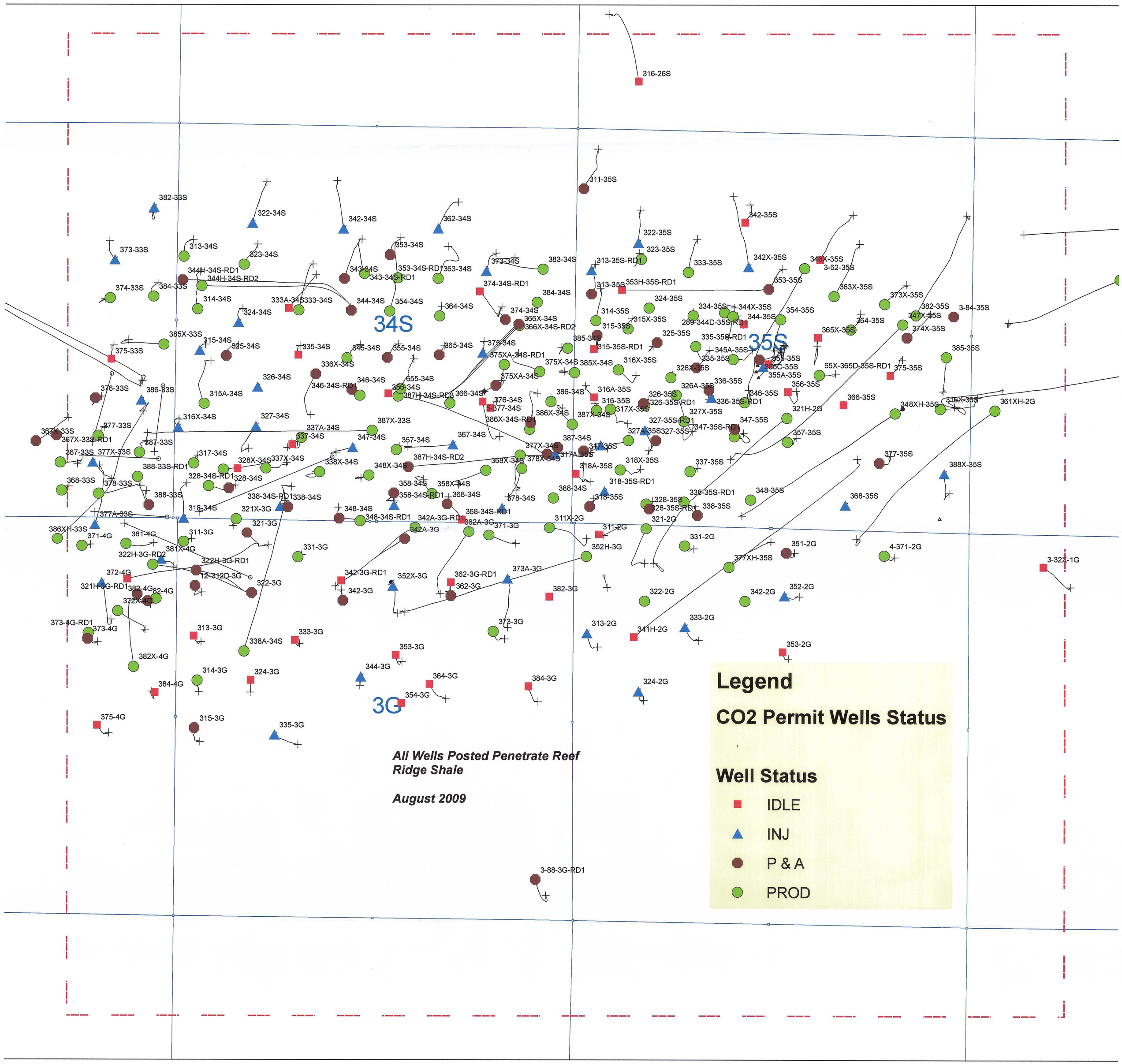
34S
35S
3G
316-26S
311-35S
382-33S
322-34S
342-34S
362-34S
373-33S
313-34S
323-34S
353-34S
343-34S
353-34S-RD1
363-34S
373-34S
383-34S
344H-34S-RD1
344H-34S-RD2
374-33S
384-33S
314-34S
333A-34S
333-34S
344-34S
354-34S
364-34S
374-34S-RD1
384-34S
324-34S
374-34S
366X-34S
366X-34S-RD2
385X-33S
315-34S
325-34S
335-34S
345-34S
355-34S
365-34S
375-34S
375XA-34S-RD1
375-33S
336X-34S
375X-34S
385X-34S
326-34S
346-34S
655-34S
375XA-34S
346-34S-RD1
355-34S
387H-34S-RD0
366-34S
376-34S
377-34S
386-34S
316A-35S
376-33S
386-33S
315A-34S
316-35S
326-35S
326-35S-RD1
317X-33S
327X-35S
316X-34S
327-34S
387X-33S
386X-34S-RD1
386X-34S
387X-34S
327-35S-RD1
327A-35S
327-35S
347-35S-RD1
367X-33S
377-33S
337A-34S
367X-33S-RD1
387-33S
337-34S
347-34S
357-34S
367-34S
387-34S
377X-34S
317A-35S
367-33S
377X-33S
317-34S
387H-34S-RD2
368X-34S
378X-34S
318A-35S
318X-35S
388-33S-RD1
328X-34S
337X-34S
338X-34S
348X-34S
328-34S-RD1
328-34S
358-34S
358X-34S
318-35S-RD1
368-33S
378-33S
388-33S
358-34S-RD1
368-34S
378-34S
388-34S
318-35S
328-35S
338-35S-RD1
338-34S-RD1
338-34S
318-34S
321X-3G
348-34S
348-34S-RD1
342A-3G-RD1
368-34S-RD1
328-35S-RD1
338-35S
377A-33S
321-3G
342A-3G
362A-3G
371-3G
311X-2G
311-2G
321-2G
386XH-33S
371-4G
381-4G
311-3G
331-3G
352H-3G
331-2G
351-2G
4-371-2G
322H-3G-RD2
381X-4G
322H-3G-RD1
377XH-35S
3-32X-1G
372-4G
342-3G-RD1
352X-3G
362-3G-RD1
373A-3G
12-312D-3G
322-3G
321H-3G-RD1
382-4G
82-4G
342-3G
362-3G
382-3G
322-2G
342-2G
352-2G
372X-4G
373-4G-RD1
373-4G
313-3G
333-3G
373-3G
313-2G
341H-2G
333-2G
338A-34S
353-2G
382X-4G
353-3G
344-3G
314-3G
324-3G
364-3G
384-3G
324-2G
384-4G
354-3G
375-4G
315-3G
335-3G
3-88-3G-RD1
All Wells Posted Penetrate Reef Ridge Shale
August 2009
Legend
CO2 Permit Wells Status
Well Status
IDLE
INJ
P & A
PROD

OCCIDENTAL OF ELK HILLS INC

12-312D-3G

Event: WELL MAINT - RIG
Event End: 11/22/2008 00:00
Sec. Reason: LOW PRODUCTION

Ground Level: 1,071.0ft
Datum: ORIGINAL KB @ 1,078.00ft (default)
API No.: 0402929007

Wellbore: ORIGINAL HOLE
PBMD: 6,910.0ft
Btm TMD: 6,952.0ft
Spud Date: 6/2/1943 00:00
BH Coord X: 6,145,743.11uss ft
BH Coord Y: 2,285,813.43uss ft

Casing Shoes (ft)	Schematic (12/1/2008)	Openings Top/Btm/Type/Status

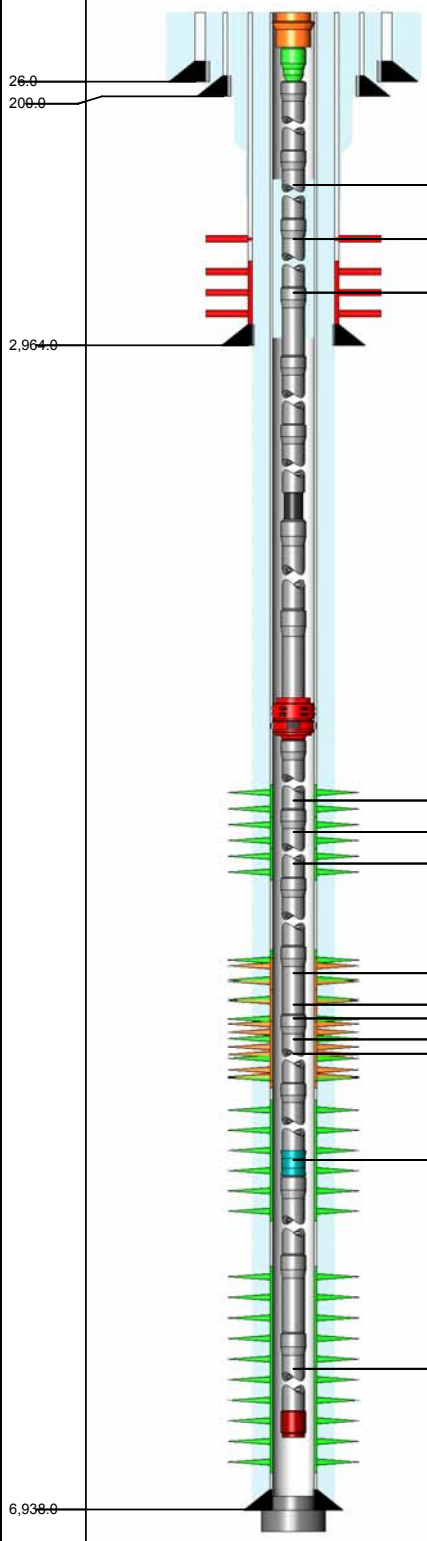

2,820.0ft, 2,821.0ft, WSO PERFS, SQUEEZED
2,838.0ft, 2,916.0ft, SLOTTED, ABANDONED
2,933.0ft, 2,944.0ft, SLOTTED, ABANDONED
6,406.0ft, 6,432.0ft, PERFORATED, OPEN
6,432.0ft, 6,486.0ft, PERFORATED, OPEN
6,486.0ft, 6,518.0ft, PERFORATED, OPEN
6,700.0ft, 6,708.0ft, PERFORATED, SQUEEZED
6,708.0ft, 6,729.0ft, PERFORATED, SQUEEZED
6,684.0ft, 6,750.0ft, PERFORATED, OPEN
6,714.0ft, 6,748.0ft, PERFORATED, SQUEEZED
6,729.0ft, 6,750.0ft, PERFORATED, SQUEEZED
6,766.0ft, 6,842.0ft, PERFORATED, OPEN
6,850.0ft, 6,892.0ft, PERFORATED, OPEN

ROD STRING Report Date: 11/22/2008 00:00

Component	Top MD (ft)	Btm MD (ft)
POLROD	0.0	30.0
PNYROD	30.0	40.0
R-5PER	40.0	3,100.0
R-5PER	3,100.0	6,850.0
RSTBAR	6,850.0	6,854.0
INSPMP	6,854.0	6,878.0

TUBING STRING Report Date: 8/1/2008 00:00

Component	Top MD (ft)	Btm MD (ft)
TH-ROT	7.0	7.0
FATNIP	7.0	7.7
CAS	7.7	6,226.4
SWIVJT	6,226.4	6,228.4
CAS	6,228.4	6,260.2
AC	6,260.2	6,261.5
CAS	6,261.5	6,832.8
STNIP	6,832.8	6,834.0
CAS	6,834.0	6,865.5
STCOLL	6,865.5	6,866.0

PLUG BACK Report Date: 12/8/2001 00:00

Component	Top MD (ft)	Btm MD (ft)
CEMENT	6,910.0	6,938.0

PLUG BACK Report Date: 3/1/2001 00:00

Component	Top MD (ft)	Btm MD (ft)
CEMENT	6,938.0	6,952.0

CONDUCTOR CASING Report Date: 6/2/1943 00:00

Item	OD (in)	Grade	Wt. (ppf)	TopMD (ft)	BtmMD (ft)
CASING JOINT(S)	18.625			7.0	26.0

SURFACE CASING Report Date: 6/16/1943 00:00

Item	OD (in)	Grade	Wt. (ppf)	TopMD (ft)	BtmMD (ft)
CASING JOINT(S)	13.375	J-55	61.00	7.0	200.0

PRODUCTION CASING Report Date: 6/24/1943 00:00

Item	OD (in)	Grade	Wt. (ppf)	TopMD (ft)	BtmMD (ft)
CASING JOINT(S)	8.625		36.00	7.0	1,470.0
CROSSOVER	8.625			1,470.0	1,471.0
CASING JOINT(S)	7.000		28.00	1,471.0	2,831.0
STAGE COLLAR	7.000			2,831.0	2,838.0
SLOTTED LINER	7.000		28.00	2,838.0	2,916.0
CASING JOINT(S)	7.000		28.00	2,916.0	2,933.0
SLOTTED LINER	7.000		28.00	2,933.0	2,944.0
CASING JOINT(S)	7.000		28.00	2,944.0	2,964.0

PRODUCTION CASING Report Date: 3/1/2001 00:00

Item	OD (in)	Grade	Wt. (ppf)	TopMD (ft)	BtmMD (ft)
CASING JOINT(S)	4.500	P-110	11.60	7.0	6,016.8
PUP JOINT	4.500	P-110	11.60	6,016.8	6,035.5
CASING JOINT(S)	4.500	P-110	11.60	6,035.5	6,850.0
FLOAT COLLAR	4.500			6,850.0	6,851.2
CASING JOINT(S)	4.500	P-110	11.60	6,851.2	6,936.7
FLOAT SHOE	4.500			6,936.7	6,938.0

Well: 12-312D-3G S/T/R: 3G/31S/24E

CASING CEMENT DETAIL
- - -
Sfc Csg. Cmt Vol.: 125 sks
Hole Size: 17"
Top Job: no
Rtns to Sfc: yes
TOC: sfc
- - -

Interm Csg. Cmt Vol.: 225 sks
Hole Size: 12.25"
Top Job: no
Rtns to Sfc:0
TTOC: 2125'
- - -

Prod. Csg. Cmt Vol.: 882 cf
Hole Size: 6.125
Top Job: no
Rtns to Sfc: no
TTOC: sfc

Liner Cmt Vol.:
Hole Size:
Top Job:
Rtns to Sfc:
TOC:
- - -
Top of Formation:
UBA: N/A
BLW: N/A

Volume Behind Pipe:
1.3 Yield Assumed
Theoretical Calculations (TTOC)
JEP

Event: WELL MAINT - RIG
Event End: 2/14/2008 00:00
Sec. Reason: BODY BREAK
End Status: FINISHED - SUCCESS
Well Classification: DEVELOPMENT

OCCIDENTAL OF ELK HILLS INC

289-344D-35S-RD1

Ground Level: 728.0ft
Datum: ORIGINAL KB @ 737.00ft (default)
API No.: 0402952683

Wellbore: ST 1
PBMD: 6,856.0ft
Btm TMD: 6,922.0ft
Spud Date: 1/1/1976 00:00
BH Coord X: 6,152,849.32uss ft
BH Coord Y: 2,289,543.04uss ft

Casing Shoes (ft)	Schematic (3/1/2008)	Openings Top/Btm/Type/Status
33.0		100.0ft, 105.0ft, SQZ PERFS, SQUEEZED
348.0		
	ORIGINAL HOLE	
		6,490.0ft, 6,518.0ft, PERFORATED, OPEN
		6,528.0ft, 6,556.0ft, PERFORATED, OPEN
		6,727.0ft, 6,767.0ft, PERFORATED, OPEN
6,908.8		

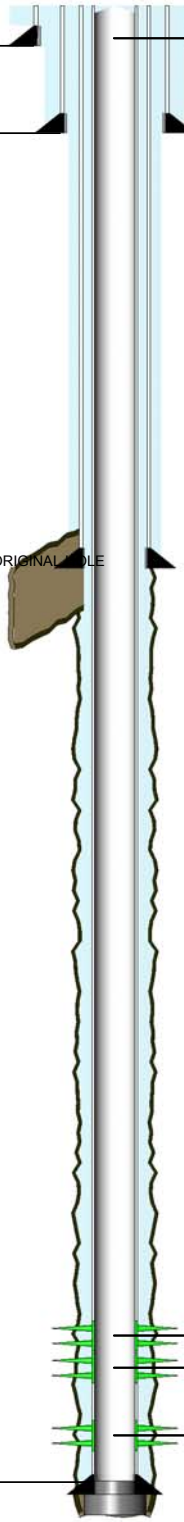

ROD STRING Report Date: 2/13/2008 00:00

Component	Top MD (ft)	Btm MD (ft)
POLRDL	0.0	36.0
PNYROD	36.0	38.0
R-6PER	38.0	2,138.0
ROD	2,138.0	4,058.0
R-6PER	4,058.0	5,498.0
R-6PER	5,498.0	6,488.0
SNKBAR	6,488.0	6,688.0
INSPMP	6,688.0	6,712.0

TUBING STRING Report Date: 1/7/2008 00:00

Component	Top MD (ft)	Btm MD (ft)
TH-DBB	9.0	9.6
FATNIP	9.6	10.3
CAS	10.3	6,117.5
AC	6,117.5	6,120.6
CAS	6,120.6	6,688.5
STNIP	6,688.5	6,689.5
CAS	6,689.5	6,720.9
CAS	6,720.9	6,752.0
STCOLL	6,752.0	6,752.4

PLUG BACK Report Date: 5/5/2001 00:00

Component	Top MD (ft)	Btm MD (ft)
CEMENT	6,865.0	6,910.0

PLUG BACK Report Date: 4/3/2001 00:00

Component	Top MD (ft)	Btm MD (ft)
CEMENT	6,910.0	6,922.0

CONDUCTOR CASING Report Date: 1/28/1976 00:00

Item	OD (in)	Grade	Wt. (ppf)	TopMD (ft)	BtmMD (ft)
CASING JOINT(S)	16.000			9.0	33.0

SURFACE CASING Report Date: 2/3/1976 00:00

Item	OD (in)	Grade	Wt. (ppf)	TopMD (ft)	BtmMD (ft)
CASING JOINT(S)	10.750	K-55	40.50	9.0	347.0
GUIDE SHOE	10.750			347.0	348.0

PRODUCTION CASING Report Date: 2/8/1976 00:00

Item	OD (in)	Grade	Wt. (ppf)	TopMD (ft)	BtmMD (ft)
CASING JOINT(S)	7.000	K-55	23.00	9.0	2,934.0
GUIDE SHOE	7.000			2,934.0	2,935.0

PRODUCTION CASING Report Date: 4/3/2001 00:00

Item	OD (in)	Grade	Wt. (ppf)	TopMD (ft)	BtmMD (ft)
CASING JOINT(S)	4.500	P-110	11.60	9.0	5,970.6
FLAG JOINT	4.500	P-110	11.60	5,970.6	5,990.6
CASING JOINT(S)	4.500	P-110	11.60	5,990.6	6,434.0
	4.500	P-110		6,434.0	6,435.0
CASING JOINT(S)	4.500	P-110		6,435.0	6,865.9
CASING JOINT(S)	4.500	P-110	11.60	6,865.9	6,908.7
FLOAT SHOE	4.500	P-110		6,908.7	6,910.0

Well: 289-344D-35S-RD1 S/T/R: 35S/30S/24E

CASING CEMENT DETAIL
- - -
Sfc Csg. Cmt Vol.: 300 cft
Hole Size: 15"
Top Job: No
Rtns to Sfc: 30 cft
TTOC: Surface
- - -

Interm Csg. Cmt Vol.:
Hole Size:
Top Job:
Rtns to Sfc:
TTOC:
- - -

Prod. Csg. Cmt Vol.: 1010 cft
Hole Size: 8-3/4"
Top Job: No
Rtns to Sfc: No
TTOC: Surface
- - -

Liner Cmt Vol.: 942 cft
Hole Size: 6-1/8"
Top Job:
Rtns to Sfc:
TTOC: Surface
- - -
Top of Formation:
ASCALEZ: 2930'

Volume Behind Pipe:
1.3 Yield Assumed
Theoretical Calculations (TTOC)

OCCIDENTAL OF ELK HILLS INC

311-2G

Event: WELL MAINT - RIG
Event End:
Sec. Reason:

Ground Elev: 853.0ft
KB to Ground: 17.0ft
Datum: ORIGINAL KB @ 870.00ft (default)
API No.: 0402958720

Wellbore: ORIGINAL HOLE
Top TMD: 17.0ft
PBMD: 7,417.0ft
Btm TMD: 7,635.0ft
Spud Date: 2/1/1983 00:00
BH Coord X: 6,151,113.24uss ftBH Coord Y: 2,286,489.95uss

Casing Shoes (ft) | Schematic (7/30/2009) | Openings Top/Btm/Type/Status

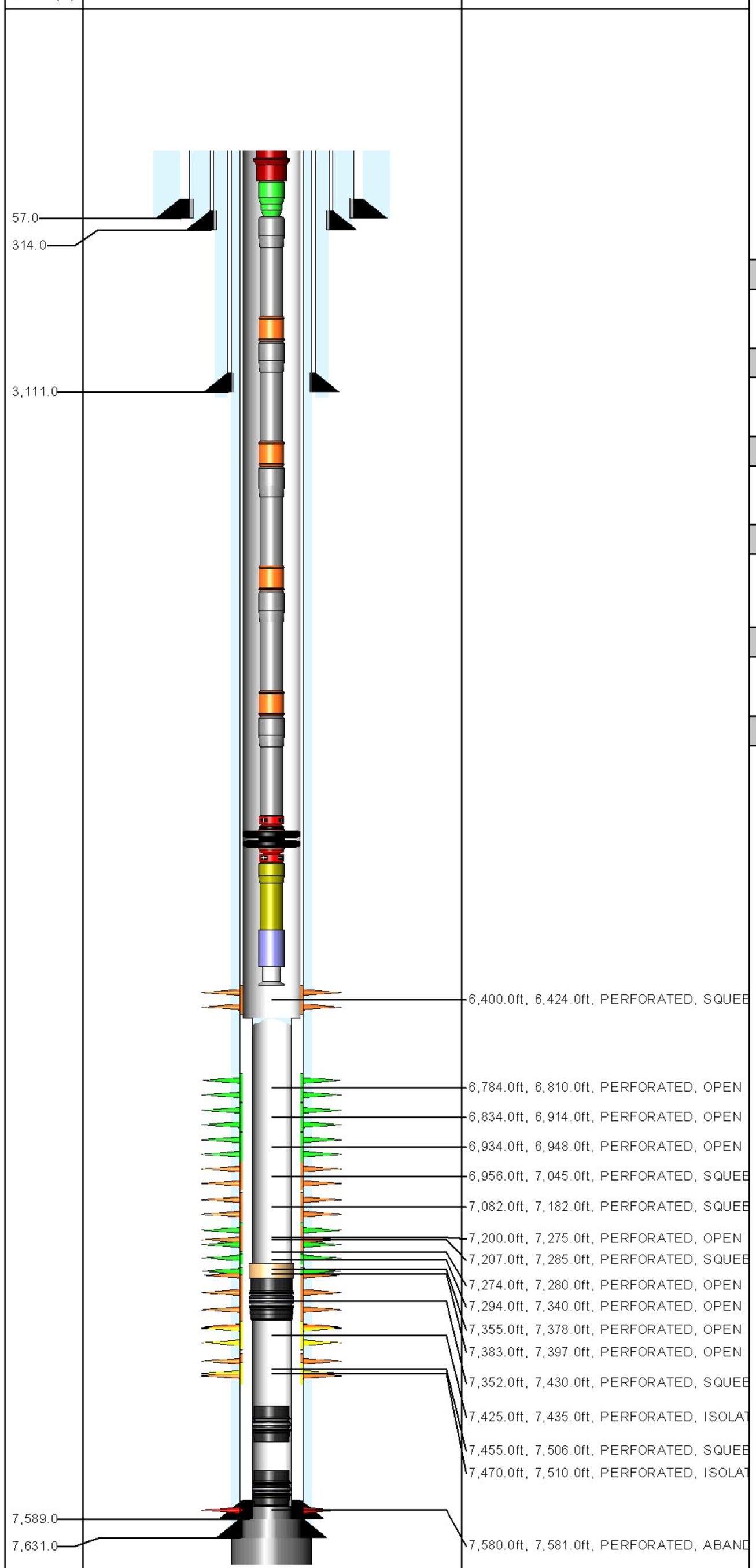

TUBING STRING Report Date: 5/22/2008 00:00

Component	Top MD (ft)	Btm MD (ft)
TH-DBB	17.0	17.7
FATNIP	17.7	18.4
CAS	18.4	2,208.4
GLM-V	2,208.4	2,217.1
CAS	2,217.1	3,970.1
GLM-V	3,970.1	3,978.8
CAS	3,978.8	5,355.9
GLM-V	5,355.9	5,364.5
CAS	5,364.5	6,302.8
GLM-V	6,302.8	6,311.4
CAS	6,311.4	6,374.0
PKR	6,374.0	6,378.1
PUPJNT	6,378.1	6,384.2
NOGO	6,384.2	6,385.5
BELCOL	6,385.5	6,385.9

PLUG BACK Report Date: 1/19/2005 00:00

Component	Top MD (ft)	Btm MD (ft)
FILL	7,333.0	7,417.0

PLUG BACK Report Date: 2/2/2004 00:00

Component	Top MD (ft)	Btm MD (ft)
BP-RET	7,417.0	7,419.5

PLUG BACK Report Date: 5/7/2002 00:00

Component	Top MD (ft)	Btm MD (ft)
BP-DR	7,567.0	7,569.0

PLUG BACK Report Date: 10/19/1996 00:00

Component	Top MD (ft)	Btm MD (ft)
CR-PRM	7,575.0	7,577.0
CEMENT	7,577.0	7,589.0

PLUG BACK Report Date: 3/11/1983 00:00

Component	Top MD (ft)	Btm MD (ft)
CEMENT	7,589.0	7,631.0

PLUG BACK Report Date: 3/11/1983 00:00

Component	Top MD (ft)	Btm MD (ft)
CEMENT	7,631.0	7,635.0

CONDUCTOR CASING Report Date: 2/10/1983 00:00

Item Description	Btm MD(ft)
CASING JOINT(S) 20 in,	57.0

SURFACE CASING Report Date: 2/17/1983 00:00

Item Description	Btm MD(ft)
CASING JOINT(S) 13.375 in, , H-40, 48	314.0

INTERMEDIATE CASING Report Date: 2/21/1983 00:00

Item Description	Btm MD (ft)
CASING JOINT(S) 9.625 in, , K-55, 40	3,111.0

PRODUCTION CASING Report Date: 3/11/1983 00:00

Item Description	Btm MD (ft)
CASING JOINT(S) 7 in, , N-80, 26	83.0
CASING JOINT(S) 7 in, , K-55, 23	5,036.0
CASING JOINT(S) 7 in, , K-55, 26	6,654.0
CASING JOINT(S) 7 in, , N-80, 26	7,631.0

LINER Report Date: 10/16/1996 00:00

Item Description	Btm MD (ft)
LINER HANGER 6.276 in, , P-110, 18	6,529.0
CASING JOINT(S) 5 in, , P-110, 18	7,589.0

S/T/R: 2G/31S/24E (WELL: 311-2G)

CASING CEMENT DETAIL
- - -
Sfc Csg. Cmt Vol.: 475cf
Hole Size: 17-1/2"
Top Job:
Rtns to Sfc: YES
TOC:
- - -
Int. Csg. Cmt Vol.: 1430cf
Hole Size: 12-1/4"
Top Job:
Rtns to Sfc: YES
TOC:
- - -
Prod Csg. Cmt Vol.: 1880cf
Hole Size: 8-3/4"
Rtns to Sfc: YES
TOC:
- - -
Liner Cmt Vol.: landed
Hole Size:

Top of Formation:
UBA 6932'
BLW: 7510'

Volume Behind Pipe
1.3 Yield Assumed on
Theoretical Calculations

Event: RECOMPLETION
Event End: 12/14/2008 00:00
Sec. Reason: Abandon lower zone
End Status: FINISHED - SUCCESS
Well Classification: DEVELOPMENT

OCCIDENTAL OF ELK HILLS INC

3-11-35S

Ground Level: 720.0ft
Datum: ORIGINAL KB @ 738.00ft (default)
API No.: 0402959303

Wellbore: ORIGINAL HOLE
PBMD: 3,147.0ft
Btm TMD: 9,950.0ft
Spud Date: 5/1/1979 00:00
BH Coord X: 6,150,907.66uss ft
BH Coord Y: 2,291,110.23uss ft

Casing Shoes (ft) | Schematic (12/14/2008) | Openings Top/Btm/Type/Status

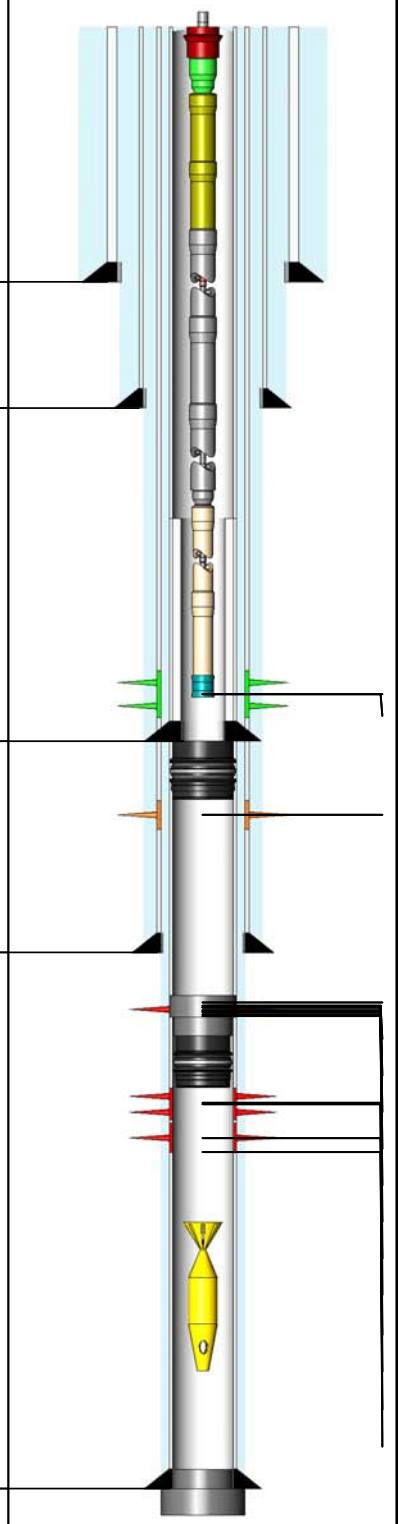

3,125.0ft, 3,136.0ft, PERFORATED, OPEN
3,125.0ft, 3,136.0ft, PERFORATED, OPEN
3,206.0ft, 3,207.0ft, PERFORATED, SQUEEZ
7,230.0ft, 7,310.0ft, PERFORATED, ABANDO
7,462.0ft, 7,482.0ft, PERFORATED, ABANDO
7,552.0ft, 7,578.0ft, PERFORATED, ABANDO
7,592.0ft, 7,598.0ft, PERFORATED, ABANDO
7,747.0ft, 7,784.0ft, PERFORATED, ABANDO
7,808.0ft, 7,850.0ft, PERFORATED, ABANDO
7,870.0ft, 7,948.0ft, PERFORATED, ABANDO
7,994.0ft, 8,074.0ft, PERFORATED, ABANDO
8,100.0ft, 8,183.0ft, PERFORATED, ABANDO
8,208.0ft, 8,220.0ft, PERFORATED, ABANDO
8,208.0ft, 8,245.0ft, PERFORATED, ABANDO
8,271.0ft, 8,283.0ft, PERFORATED, ABANDO
8,270.0ft, 8,318.0ft, PERFORATED, ABANDO

ROD STRING Report Date: 12/4/2008 00:00

Component	Top MD (ft)	Btm MD (ft)
POLROD	0.0	30.0
PNYROD	30.0	48.0
ROD	48.0	2,718.0
R-8PER	2,718.0	2,958.0
R-8PER	2,958.0	3,108.0
INSPMP	3,108.0	3,126.0

TUBING STRING Report Date: 12/3/2008 00:00

Component	Top MD (ft)	Btm MD (ft)
TH-DBB	18.0	18.7
FATNIP	18.7	19.5
PUPJNT	19.5	23.6
PUPJNT	23.6	29.7
CAS	29.7	2,980.1
XO	2,980.1	2,981.2
TBGINC	2,981.2	3,127.2
STNIP	3,127.2	3,128.0

PLUG BACK Report Date: 11/26/2008 00:00

Component	Top MD (ft)	Btm MD (ft)
BP-DR	3,145.0	3,146.9

PLUG BACK Report Date: 11/13/2008 00:00

Component	Top MD (ft)	Btm MD (ft)
CEMENT	6,830.0	8,193.0

PLUG BACK Report Date: 3/29/1980 00:00

Component	Top MD (ft)	Btm MD (ft)
CEMENT	8,193.0	8,200.0

PLUG BACK Report Date: 3/29/1980 00:00

Component	Top MD (ft)	Btm MD (ft)
BP-DR	8,200.0	8,202.0

PLUG BACK Report Date: 8/26/1979 00:00

Component	Top MD (ft)	Btm MD (ft)
JUNK	8,630.0	8,633.0

PLUG BACK Report Date: 8/24/1979 00:00

Component	Top MD (ft)	Btm MD (ft)
CEMENT	8,666.0	8,750.0

PLUG BACK Report Date: 8/23/1979 00:00

Component	Top MD (ft)	Btm MD (ft)
CEMENT	8,750.0	9,950.0

CONDUCTOR CASING Report Date: 5/11/1979 00:00

Item	OD (in)	Grade	Wt. (ppf)	TopMD (ft)	BtmMD (ft)
CASING JOINT(S)	20.000			18.0	60.0

SURFACE CASING Report Date: 6/1/1979 00:00

Item	OD (in)	Grade	Wt. (ppf)	TopMD (ft)	BtmMD (ft)
CASING JOINT(S)	13.375	K-55	54.50	18.0	480.1
FLOAT COLLAR	13.375	K-55	54.50	480.1	480.2
CASING JOINT(S)	13.375	K-55	54.50	480.2	519.0
FLOAT SHOE	13.375	K-55	54.50	519.0	520.0

INTERMEDIATE CASING Report Date: 6/5/1979 00:00

Item	OD (in)	Grade	Wt. (ppf)	TopMD (ft)	BtmMD (ft)
CASING JOINT(S)	9.625	K-55	40.00	18.0	3,473.0
FLOAT COLLAR	9.625	K-55	40.00	3,473.0	3,473.0
CASING JOINT(S)	9.625	K-55	40.00	3,473.0	3,513.0
FLOAT SHOE	9.625	K-55	40.00	3,513.0	3,514.0

PRODUCTION CASING Report Date: 8/23/1979 00:00

Item	OD (in)	Grade	Wt. (ppf)	TopMD (ft)	BtmMD (ft)
CASING JOINT(S)	7.000	N-80	23.00	18.0	4,807.8
CASING JOINT(S)	7.000	N-80	26.00	4,807.8	7,107.8
FLAG JOINT	7.000	N-80	26.00	7,107.8	7,116.0
CASING JOINT(S)	7.000	N-80	26.00	7,116.0	8,424.5
CASING JOINT(S)	7.000	N-80	29.00	8,424.5	8,663.0
FLOAT COLLAR	7.000	N-80	29.00	8,663.0	8,664.4
CASING JOINT(S)	7.000	N-80	29.00	8,664.4	8,747.9
FLOAT SHOE	7.000	N-80	29.00	8,747.9	8,750.0

SCREEN / SLOTTED LINER Report Date: 12/2/2008 00:00

Item	OD (in)	Grade	Wt. (ppf)	TopMD (ft)	BtmMD (ft)
DRIVE-ON ADAPTER	7.000			3,027.1	3,036.0
LANDING NIPPLE	4.500			3,036.0	3,046.4
BLANK	4.000	L-80		3,046.4	3,076.5
BLANK	4.000	L-80		3,076.5	3,106.7
SCREEN	4.000	L-80		3,106.7	3,144.0
BULL PLUG	4.000			3,144.0	3,145.0

Well: 3-11-35S S/T/R: 35S/30S/24E

CASING CEMENT DETAIL
- - -
Sfc Csg. Cmt Vol.: 700 cf
Hole Size: 17-1/2" (13-3/8" Casing)
Top Job: NO
Rtns to Sfc: YES
TOC: sfc
- - -

Interm Csg. Cmt Vol.: 1960 cf
Hole Size: 12-1/4" (9-5/8" (Casing)
Top Job: NO
Rtns to Sfc: YES
TOC: sfc
- - -

Prod. Csg. Cmt Vol.: 2730 cf
Hole Size: 8-3/4" (7" Casing)
Top Job: NO
Rtns to Sfc: NO
TTOC: Surface
- - -

Liner Cmt Vol.: Screen/Slotted Liner
Hole Size:
Top Job:
Rtns to Sfc:
TTOC:
- - -
Top of Formation:
UBA: 7715'
BLW: 8386'

Volume Behind Pipe:
1.3 Yield Assumed
Theoretical Calculations (TTOC)

OCCIDENTAL OF ELK HILLS INC

311-3G

Event: WELL MAINT - RIGLESS
Event End:
Sec. Reason:

Ground Level: 1,101.0ft
Datum: ORIGINAL KB @ 1,115.00ft (default)
API No.: 0402952693

Wellbore: ORIGINAL HOLE
PBMD: 7,481.0ft
Btm TMD: 7,700.0ft
Spud Date: 1/28/1976 00:00
BH Coord X: 6,145,591.59uss ft
BH Coord Y: 2,286,398.91uss ft

Casing Shoes (ft) | Schematic (8/4/2009) | Openings Top/Btm/Type/Status

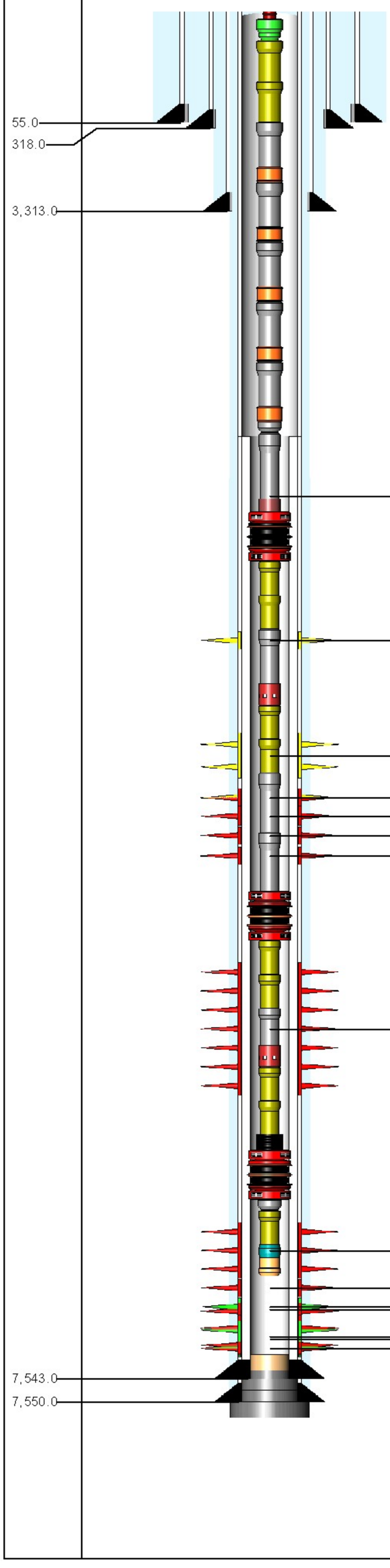

6,770.0ft, 6,771.0ft, WSO PERFS, SQUEEZE
6,822.0ft, 6,842.0ft, PERFORATED, ISOLATE
6,860.0ft, 6,908.0ft, PERFORATED, ISOLATE
6,934.0ft, 6,958.0ft, PERFORATED, ISOLATE
6,934.0ft, 6,960.0ft, PERFORATED, ABANDO
6,970.0ft, 7,050.0ft, PERFORATED, ABANDO
7,060.0ft, 7,140.0ft, PERFORATED, ABANDO
7,150.0ft, 7,244.0ft, PERFORATED, ABANDO
7,254.0ft, 7,306.0ft, PERFORATED, ABANDO
7,254.0ft, 7,306.0ft, REPERFORATED, ISOLA
7,326.0ft, 7,364.0ft, PERFORATED, ABANDO
7,326.0ft, 7,364.0ft, REPERFORATED, OPEN
7,326.0ft, 7,364.0ft, REPERFORATED, OPEN
7,374.0ft, 7,384.0ft, PERFORATED, ABANDO
7,374.0ft, 7,384.0ft, REPERFORATED, OPEN
7,374.0ft, 7,384.0ft, REPERFORATED, OPEN
7,398.0ft, 7,436.0ft, PERFORATED, OPEN
7,408.0ft, 7,438.0ft, PERFORATED, ABANDO
7,450.0ft, 7,470.0ft, PERFORATED, ABANDO
7,458.0ft, 7,490.0ft, PERFORATED, OPEN
7,462.5ft, 7,482.5ft, PERFORATED, ABANDO

TUBING STRING Report Date: 11/6/2003 00:00

Component	Top MD (ft)	Btm MD (ft)
TH-DBB	14.0	14.6
FATNIP	14.6	15.3
PUPJNT	15.3	23.2
PUPJNT	23.2	31.4
TBGJNT	31.4	2,195.9
GLM-V	2,195.9	2,204.4
TBGJNT	2,204.4	3,902.6
GLM-V	3,902.6	3,911.4
TBGJNT	3,911.4	5,106.0
GLM-V	5,106.0	5,114.4
TBGJNT	5,114.4	5,902.0
GLM-V	5,902.0	5,910.4
TBGJNT	5,910.4	6,446.5
GLM-V	6,446.5	6,455.0
XO	6,455.0	6,456.1
TBGJNT	6,456.1	6,798.2
ON-OFF	6,798.2	6,799.3
PKR-S	6,799.3	6,803.3
PUPJNT	6,803.3	6,809.4
PUPJNT	6,809.4	6,819.6
TBGJNT	6,819.6	6,850.8
SS-C	6,850.8	6,854.9
PUPJNT	6,854.9	6,861.0
PUPJNT	6,861.0	6,869.0
TBGJNT	6,869.0	7,244.8
PKR-S	7,244.8	7,250.0
PUPJNT	7,250.0	7,256.1
PUPJNT	7,256.1	7,264.1
TBGJNT	7,264.1	7,295.3
SS-C	7,295.3	7,299.3
PUPJNT	7,299.3	7,307.2
PUPJNT	7,307.2	7,315.2
SA	7,315.2	7,316.0

PACKER ASSEMBLY (PERMANENT) Report Date: 11/6/2003 00:00

Component	Top MD (ft)	Btm MD (ft)
PKR-S	7,316.0	7,321.8
XO	7,321.8	7,322.4
PUPJNT	7,322.4	7,332.5
PNIP-O	7,332.5	7,333.9
WLREG	7,333.9	7,334.4

PLUG BACK Report Date: 8/28/2002 00:00

Component	Top MD (ft)	Btm MD (ft)
FILL	7,481.0	7,513.0

PLUG BACK Report Date: 4/3/1998 00:00

Component	Top MD (ft)	Btm MD (ft)
FILL	7,513.0	7,525.0

PLUG BACK Report Date: 2/28/1995 00:00

Component	Top MD (ft)	Btm MD (ft)
CEMENT	7,525.0	7,543.0

PLUG BACK Report Date: 2/25/1995 00:00

Component	Top MD (ft)	Btm MD (ft)
CEMENT	7,543.0	7,545.0

PLUG BACK Report Date: 2/21/1995 00:00

Component	Top MD (ft)	Btm MD (ft)
CEMENT	7,545.0	7,550.0

PLUG BACK Report Date: 3/30/1976 00:00

Component	Top MD (ft)	Btm MD (ft)
CEMENT	7,550.0	7,700.0

CONDUCTOR CASING Report Date: 1/28/1976 00:00

Item	OD (in)	Grade	Wt. (ppf)	TopMD (ft)	BtmMD (ft)
CASING JOINT(S)	20.000			14.0	55.0

SURFACE CASING Report Date: 2/25/1976 00:00

Item	OD (in)	Grade	Wt. (ppf)	TopMD (ft)	BtmMD (ft)
CASING JOINT(S)	13.375	K-55	54.50	14.0	318.0

INTERMEDIATE CASING Report Date: 3/1/1976 00:00

Item	OD (in)	Grade	Wt. (ppf)	TopMD (ft)	BtmMD (ft)
CASING JOINT(S)	9.625	K-55	40.00	14.0	3,313.0

PRODUCTION CASING Report Date: 3/30/1976 00:00

Item	OD (in)	Grade	Wt. (ppf)	TopMD (ft)	BtmMD (ft)
CASING JOINT(S)	7.000	K-55	26.00	14.0	76.1
CASING JOINT(S)	7.000	K-55	23.00	76.1	5,086.0
CASING JOINT(S)	7.000	K-55	26.00	5,086.0	6,904.8
FLAG JOINT	7.000	K-55	26.00	6,904.8	6,923.2
CASING JOINT(S)	7.000	K-55	26.00	6,923.2	7,461.3
FLOAT COLLAR	7.000	K-55	26.00	7,461.3	7,463.2
CASING JOINT(S)	7.000	K-55	26.00	7,463.2	7,548.4
FLOAT SHOE	7.000	K-55	26.00	7,548.4	7,550.0

INNER LINER Report Date: 2/25/1995 00:00

Item	OD (in)	Grade	Wt. (ppf)	TopMD (ft)	BtmMD (ft)
LINER HANGER	7.000	N-80	18.00	6,486.2	6,493.1
CASING JOINT(S)	5.000	N-80	18.00	6,493.1	7,540.8
FLOAT COLLAR	5.000	N-80	18.00	7,540.8	7,542.2
FLOAT SHOE	5.000	N-80	18.00	7,542.2	7,543.0

Well: 311-3G S/T/R: 34/30S/24E

CASING CEMENT DETAIL
- - -
Sfc Csg. Cmt Vol.: 347 cf
Hole Size: 17.5
Top Job: no
Rtns to Sfc: 10 cf
TOC: sfc
- - -

Interm Csg. Cmt Vol.: 1558 cf
Hole Size: 12.25
Top Job: no
Rtns to Sfc: 295 cf
TOC: sfc
- - -

Prod. Csg. Cmt Vol.: 2331 cf
Hole Size: 8.75
Top Job: no
Rtns to Sfc: 0
TTOC: sfc

Liner Cmt Vol.:
Hole Size:
Top Job:
Rtns to Sfc:
TOC:
- - -
Top of Formation:
UBA: 6967'
BLW: 7549'

Volume Behind Pipe:
1.3 Yield Assumed
Theoretical Calculations (TTOC)

OCCIDENTAL OF ELK HILLS INC

311X-2G

Event: WELL MAINT - RIGLESS
Event End: 7/10/2009 00:00
Sec. Reason:

Ground Level: 897.0ft
Datum: ORIGINAL KB @ 918.00ft (default)
API No.: 0403018328

Wellbore: ORIGINAL HOLE
PBMD: 7,580.0ft
Btm TMD: 7,696.0ft
Spud Date: 6/29/2001 00:00
BH Coord X: 6,150,457.63uss ft
BH Coord Y: 2,286,588.30uss ft

Casing Shoes (ft) | Schematic (8/1/2009) | Openings Top/Btm/Type/Status

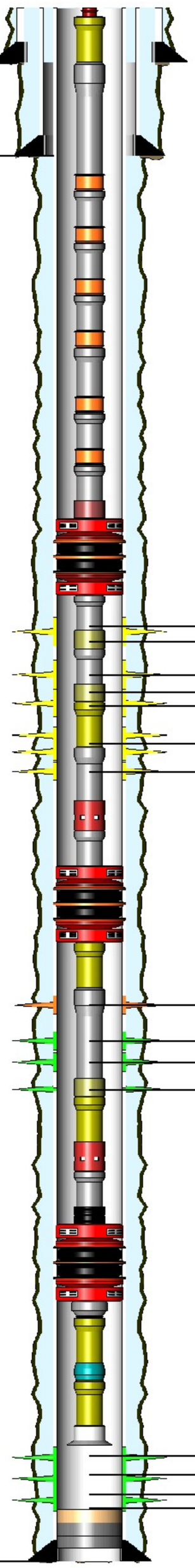

61.0
1,181.0
7,696.0

6,830.0ft, 6,856.0ft, PERFORATED, ISOLA
6,860.0ft, 6,870.0ft, PERFORATED, ISOLA
6,883.0ft, 6,910.0ft, PERFORATED, ISOLA
6,910.0ft, 6,915.0ft, PERFORATED, ISOLA
6,915.0ft, 6,930.0ft, PERFORATED, ISOLA
6,934.0ft, 6,977.0ft, PERFORATED, ISOLA
6,982.0ft, 6,998.0ft, PERFORATED, ISOLA
7,148.0ft, 7,154.0ft, PERFORATED, SQUE
7,270.0ft, 7,305.0ft, PERFORATED, OPEN
7,314.0ft, 7,337.0ft, PERFORATED, OPEN
7,343.0ft, 7,345.0ft, PERFORATED, OPEN
7,445.0ft, 7,480.0ft, PERFORATED, OPEN
7,480.0ft, 7,490.0ft, PERFORATED, OPEN
7,500.0ft, 7,520.0ft, PERFORATED, OPEN
7,526.0ft, 7,546.0ft, PERFORATED, OPEN

TUBING STRING Report Date: 1/6/2006 00:00

Component	Top MD (ft)	Btm MD (ft)
TH-DBB	21.0	21.7
PUPJNT	21.7	27.8
TBGJNT	27.8	2,284.4
GLM-V	2,284.4	2,293.2
TBGJNT	2,293.2	3,928.4
GLM-V	3,928.4	3,937.3
TBGJNT	3,937.3	5,048.9
GLM-V	5,048.9	5,057.8
TBGJNT	5,057.8	5,744.4
GLM-V	5,744.4	5,753.3
TBGJNT	5,753.3	6,276.2
GLM-V	6,276.2	6,285.0
TBGJNT	6,285.0	6,742.7
GLM-V	6,742.7	6,751.6
TBGJNT	6,751.6	6,784.3
ON-OFF	6,784.3	6,785.6
PKR-S	6,785.6	6,791.1
TBGJNT	6,791.1	6,852.6
BJ	6,852.6	6,872.7
TBGJNT	6,872.7	6,903.4
BJ	6,903.4	6,923.6
PUPJNT	6,923.6	6,942.1
TBGJNT	6,942.1	7,034.4
SS-C	7,034.4	7,038.7
TBGJNT	7,038.7	7,069.6
PKR-S	7,069.6	7,075.1
PUPJNT	7,075.1	7,091.7
TBGJNT	7,091.7	7,337.9
BJ	7,337.9	7,348.1
PUPJNT	7,348.1	7,364.3
SS-O	7,364.3	7,368.7
TBGJNT	7,368.7	7,399.6
SA	7,399.6	7,400.1

PACKER ASSEMBLY (PERMANENT) Report Date: 10/2/2001 00:00

Component	Top MD (ft)	Btm MD (ft)
PKR-S	7,400.0	7,406.3
XO	7,406.3	7,406.9
PUPJNT	7,406.9	7,411.0
PNIP-O	7,411.0	7,412.5
PUPJNT	7,412.5	7,416.6
BELCOL	7,416.6	7,417.0

PLUG BACK Report Date: 7/30/2003 00:00

Component	Top MD (ft)	Btm MD (ft)
FILL	7,543.0	7,580.0

PLUG BACK Report Date: 9/21/2001 00:00

Component	Top MD (ft)	Btm MD (ft)
CEMENT	7,580.0	7,694.0

PLUG BACK Report Date: 8/4/2001 00:00

Component	Top MD (ft)	Btm MD (ft)
CEMENT	7,694.0	7,695.0

CONDUCTOR CASING Report Date: 6/5/2001 00:00

Item	OD (in)	Grade	Wt. (ppf)	TopMD (ft)	BtmMD (ft)
CASING JOINT(S)	14.000			21.0	61.0

PRODUCTION CASING Report Date: 7/22/2001 00:00

Item	OD (in)	Grade	Wt. (ppf)	TopMD (ft)	BtmMD (ft)
CASING JOINT(S)	7.000	N-80	26.00	21.0	5,819.6
CROSSOVER	7.000	N-80	26.00	5,819.6	5,842.0
CASING JOINT(S)	7.000	N-80	26.00	5,842.0	7,603.0
FLOAT COLLAR	7.000	N-80	26.00	7,603.0	7,604.0
CASING JOINT(S)	7.000	N-80	26.00	7,604.0	7,694.0
FLOAT SHOE	7.000	N-80	26.00	7,694.0	7,696.0

SURFACE CASING Report Date: 7/1/2001 00:00

Item	OD (in)	Grade	Wt. (ppf)	TopMD (ft)	BtmMD (ft)
CASING JOINT(S)	9.625	K-55	36.00	21.0	1,133.0
	9.625			1,133.0	1,134.0
CASING JOINT(S)	9.625	K-55	36.00	1,134.0	1,179.0
FLOAT SHOE	9.625			1,179.0	1,181.0

Well: 311X-2G S/T/R: 2G/31S/24E

CASING CEMENT DETAIL
- - -
Sfc Csg. Cmt Vol.: 565 cf
Hole Size: 12.25"
Top Job: No
Rtns to Sfc: 2 cf
TOC: Sfc
- - -

Interm Csg. Cmt Vol.:
Hole Size:
Top Job:
Rtns to Sfc:
TOC:
- - -

Prod. Csg. Cmt Vol.: 1550 cf
Hole Size: 8.75"
Top Job: No
Rtns to Sfc:
TTOC: Sfc

Liner Cmt Vol.:
Hole Size:
Top Job:
Rtns to Sfc:
TTOC:
- - -
Top of Formation:
UBA 6981'
BLW: 7548'

Volume Behind Pipe:
1.3 Yield Assumed
Theoretical Calculations (TTOC)

OCCIDENTAL OF ELK HILLS INC

312-2G

Event: WELL MAINT - RIGLESS
Event End:
Sec. Reason:
End Status:
Well Classification: DEVELOPMENT

Ground Level: 877.0ft
Datum: ORIGINAL KB @ 886.00ft (KEY 2817)(default)
API No.: 0402927980

Wellbore: ST1
PBMD: 7,840.0ft
Btm TMD: 8,050.0ft
Spud Date: 10/21/1952 00:00
BH Coord X: 6,151,192.83uss ft
BH Coord Y: 2,285,945.27uss ft

Casing Shoes (ft) | Schematic (8/10/2009) | Openings Top/Btm/Type/Status

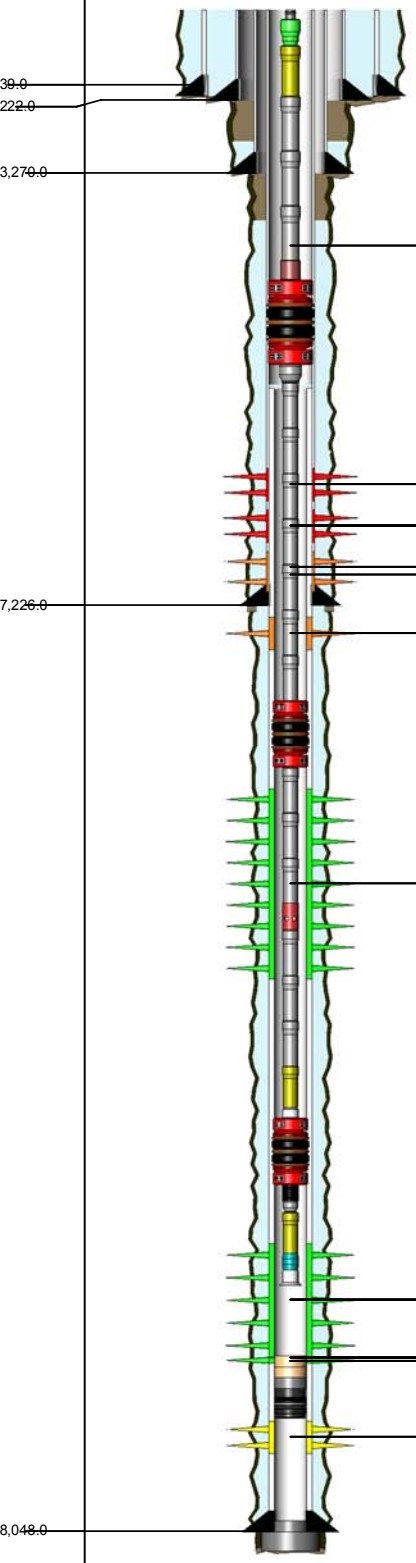

6,300.0ft, 6,301.0ft, WSO PERFS, SQUEEZED
6,995.0ft, 7,075.0ft, PERFORATED, ABANDONE
7,095.0ft, 7,147.0ft, PERFORATED, ABANDONE
7,095.0ft, 7,147.0ft, REPERFORATED, SQUEEZ
7,162.0ft, 7,200.0ft, PERFORATED, SQUEEZED
7,170.0ft, 7,210.0ft, PERFORATED, SQUEEZED
7,240.0ft, 7,290.0ft, PERFORATED, SQUEEZED
7,315.0ft, 7,392.0ft, PERFORATED, OPEN
7,454.0ft, 7,538.0ft, PERFORATED, OPEN
7,454.0ft, 7,538.0ft, REPERFORATED, OPEN
7,552.0ft, 7,590.0ft, PERFORATED, OPEN
7,552.0ft, 7,590.0ft, REPERFORATED, ISOLATE
7,624.0ft, 7,706.0ft, PERFORATED, OPEN
7,624.0ft, 7,706.0ft, REPERFORATED, ISOLATE
7,860.0ft, 7,940.0ft, PERFORATED, ISOLATED

TUBING STRING — Report Date: 12/11/2001 00:00

Component	Top MD (ft)	Btm MD (ft)
TH-SGL	9.0	9.6
FATNIP	9.6	10.9
PUPJNT	10.9	17.0
TBGJNT	17.0	6,888.6
ON-OFF	6,888.6	6,890.0
PKR-S	6,890.0	6,894.1
XO	6,894.1	6,895.2
TBGJNT	6,895.2	7,300.1
PKR-S	7,300.1	7,305.4
TBGJNT	7,305.4	7,365.8
SS-O	7,365.8	7,369.8
TBGJNT	7,369.8	7,431.3
PUPJNT	7,431.3	7,441.3
LOCSUB	7,441.3	7,442.3
PKR-S	7,442.3	7,444.9
SA	7,444.9	7,448.6
XO	7,448.6	7,449.3
PUPJNT	7,449.3	7,455.5
PNIP-O	7,455.5	7,456.5
BELCOL	7,456.5	7,456.9

PLUG BACK — Report Date: 4/7/2003 00:00

Component	Top MD (ft)	Btm MD (ft)
FILL	7,510.0	7,807.0

PLUG BACK — Report Date: 7/15/1990 00:00

Component	Top MD (ft)	Btm MD (ft)
FILL	7,807.0	7,840.0

PLUG BACK — Report Date: 6/17/1987 00:00

Component	Top MD (ft)	Btm MD (ft)
CEMENT	7,840.0	7,850.0
BP-DR	7,850.0	7,853.0

PLUG BACK — Report Date: 5/30/1987 00:00

Component	Top MD (ft)	Btm MD (ft)
CEMENT	8,005.0	8,048.0

PLUG BACK — Report Date: 4/11/1987 00:00

Component	Top MD (ft)	Btm MD (ft)
CEMENT	8,048.0	8,050.0

CONDUCTOR CASING — Report Date: 10/21/1952 00:00

Item	OD (in)	Grade	Wt. (ppf)	TopMD (ft)	BtmMD (ft)
CASING JOINT(S)	26.000		68.00	9.0	40.0

SURFACE CASING — Report Date: 1/20/1953 00:00

Item	OD (in)	Grade	Wt. (ppf)	TopMD (ft)	BtmMD (ft)
CASING JOINT(S)	16.000	H-40	65.00	9.0	222.0

INTERMEDIATE CASING — Report Date: 1/25/1953 00:00

Item	OD (in)	Grade	Wt. (ppf)	TopMD (ft)	BtmMD (ft)
CASING JOINT(S)	10.750	J-55	45.50	9.0	77.0
CASING JOINT(S)	10.750	J-55	40.50	77.0	2,172.0
CASING JOINT(S)	10.750	J-55	45.50	2,172.0	3,270.0

PRODUCTION CASING — Report Date: 2/22/1953 00:00

Item	OD (in)	Grade	Wt. (ppf)	TopMD (ft)	BtmMD (ft)
CASING JOINT(S)	7.000	N-80	26.00	9.0	48.0
CASING JOINT(S)	7.000	N-80	23.00	48.0	5,814.0
CASING JOINT(S)	7.000	N-80	26.00	5,814.0	7,226.0

LINER — Report Date: 4/11/1987 00:00

Item	OD (in)	Grade	Wt. (ppf)	TopMD (ft)	BtmMD (ft)
LINER HANGER	6.276	K-55	20.00	6,913.0	6,914.6
CASING JOINT(S)	5.500	K-55	20.00	6,914.6	8,005.2
FLOAT COLLAR	5.500	K-55	20.00	8,005.2	8,006.5
CASING JOINT(S)	5.500	K-55	20.00	8,006.5	8,046.4
FLOAT SHOE	5.500	K-55	20.00	8,046.4	8,048.0

Well: 312-2G S/T/R: 2G/31S/24E

CASING CEMENT DETAIL
- - -
Sfc Csg. Cmt Vol.: 500 sks
Hole Size: 22"
Top Job: No
Rtns to Sfc: yes
TOC: sfc
- - -

Interm Csg. Cmt Vol.: 600 sks
Hole Size: 15"
Top Job: No
Rtns to Sfc: no
TOC: 1920' per Thermometric Survey
- - -

Prod. Csg. Cmt Vol.: 500 sks
Hole Size: 9.75"
Top Job: No
Rtns to Sfc: no
TOC: Sfc 5220' per Thermometric Survey
- - -

Liner Cmt Vol.: 256 cf
Hole Size: 8.5"
Top Job: no
Rtns to Sfc :no
TTOC: 6930'
- - -
Top of Formation:
UBA: 7073'
BLW: 7708'

Volume Behind Pipe:
1.3 Yield Assumed
Theoretical Calculations (TTOC)

OCCIDENTAL OF ELK HILLS INC

313-2G

Event: WELL MAINT - RIGLESS
Event End: 10/23/2006 00:00
Sec. Reason:

Ground Level: 934.0ft
Datum: ORIGINAL KB @ 948.00ft (default)
API No.: 0402957942

Wellbore: ORIGINAL HOLE
PBMD: 7,990.0ft
Btm TMD: 8,090.0ft
Spud Date: 5/3/1978 00:00
BH Coord X: 6,150,963.60uss ft
BH Coord Y: 2,285,184.30uss ft

Casing Shoes (ft) | Schematic (11/1/2006) | Openings Top/Btm/Type/Status

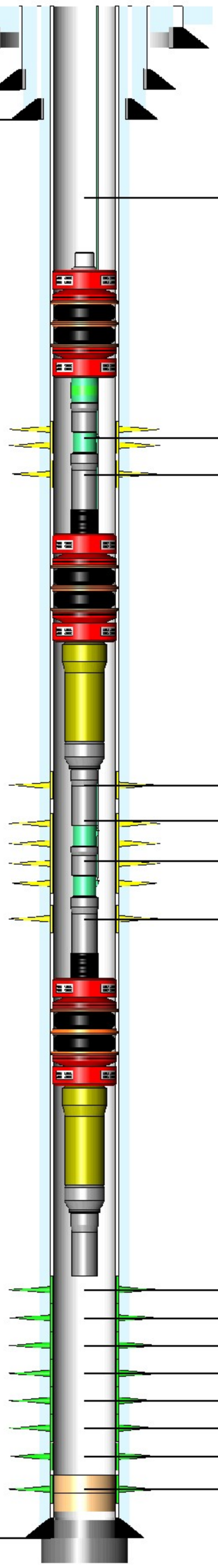

54.0
324.0
3,302.0
8,080.0

PACKER
6,000.0ft, 6,001.0ft, WSO PERFS, SQUEE
7,323.0ft, 7,355.0ft, PERFORATED, ISOLA
7,370.0ft, 7,405.0ft, PERFORATED, ISOLA
7,431.0ft, 7,460.0ft, PERFORATED, ISOLA
7,475.0ft, 7,488.0ft, PERFORATED, ISOLA
7,488.0ft, 7,535.0ft, PERFORATED, ISOLA
7,555.0ft, 7,590.0ft, PERFORATED, ISOLA
7,612.0ft, 7,618.0ft, PERFORATED, OPEN
7,648.0ft, 7,663.0ft, PERFORATED, OPEN
7,671.0ft, 7,680.0ft, PERFORATED, OPEN
7,700.0ft, 7,745.0ft, PERFORATED, OPEN
7,745.0ft, 7,765.0ft, PERFORATED, OPEN
7,765.0ft, 7,782.0ft, PERFORATED, OPEN
7,806.0ft, 7,890.0ft, PERFORATED, OPEN
7,914.0ft, 7,958.0ft, PERFORATED, OPEN

TUBING STRING Report Date: 4/22/1992 00:00

Component	Top MD (ft)	Btm MD (ft)
BELCOL	7,277.6	7,278.0
PKR-S	7,278.0	7,284.0
LNDNIP	7,284.0	7,285.2
TBGJNT	7,285.2	7,344.5
INJM-V	7,344.5	7,353.7
TBGJNT	7,353.7	7,415.7
SA	7,415.7	7,416.0
PKR-S	7,416.0	7,420.4
PUPJNT	7,420.4	7,424.6
XO	7,424.6	7,425.2
TBGJNT	7,425.2	7,487.2
INJM-V	7,487.2	7,496.4
TBGJNT	7,496.4	7,527.1
INJM-V	7,527.1	7,536.3
TBGJNT	7,536.3	7,598.2
SA	7,598.2	7,598.5

PACKER ASSEMBLY (PERMANENT) Report Date: 5/1/1992 00:00

Component	Top MD (ft)	Btm MD (ft)
PKR-S	7,598.5	7,601.5
PUPJNT	7,601.5	7,605.7
XO	7,605.7	7,606.3
TBGJNT	7,606.3	7,610.0

PLUG BACK Report Date: 10/19/2004 00:00

Component	Top MD (ft)	Btm MD (ft)
FILL	7,916.0	7,922.0

PLUG BACK Report Date: 1/8/2004 00:00

Component	Top MD (ft)	Btm MD (ft)
FILL	7,922.0	7,989.0

PLUG BACK Report Date: 8/16/1978 00:00

Component	Top MD (ft)	Btm MD (ft)
CEMENT	7,993.0	8,080.0

PLUG BACK Report Date: 8/16/1978 00:00

Component	Top MD (ft)	Btm MD (ft)
CEMENT	8,080.0	8,090.0

CONDUCTOR CASING Report Date: 5/3/1978 00:00

Item	OD (in)	Grade	Wt. (ppf)	TopMD (ft)	BtmMD (ft)
CASING JOINT(S)	20.000			14.0	54.0

SURFACE CASING Report Date: 7/21/1978 00:00

Item	OD (in)	Grade	Wt. (ppf)	TopMD (ft)	BtmMD (ft)
CASING JOINT(S)	13.375	H-40	48.00	14.0	324.0

INTERMEDIATE CASING Report Date: 7/29/1978 00:00

Item	OD (in)	Grade	Wt. (ppf)	TopMD (ft)	BtmMD (ft)
CASING JOINT(S)	9.625	K-55	40.00	14.0	3,302.0

PRODUCTION CASING Report Date: 8/16/1978 00:00

Item	OD (in)	Grade	Wt. (ppf)	TopMD (ft)	BtmMD (ft)
CASING JOINT(S)	7.000	K-55	26.00	14.0	80.8
CASING JOINT(S)	7.000	K-55	23.00	80.8	5,341.4
CASING JOINT(S)	7.000	K-55	26.00	5,341.4	6,707.7
FLAG JOINT	7.000	K-55	26.00	6,707.7	6,728.8
CASING JOINT(S)	7.000	K-55	26.00	6,728.8	7,993.3
FLOAT COLLAR	7.000			7,993.3	7,994.7
CASING JOINT(S)	7.000	K-55	26.00	7,994.7	8,077.8
FLOAT SHOE	7.000			8,077.8	8,080.0

Well: 313-2G S/T/R: 2G/31S/24E

CASING CEMENT DETAIL
- - -
Sfc Csg. Cmt Vol.: 440 cf
Hole Size: 17.5"
Top Job: No
Rtns to Sfc: 20 cf
TOC: Sfc
- - -

Interm Csg. Cmt Vol.: 1810 cf
Hole Size: 12.25"
Top Job: No
Rtns to Sfc: 90 cf
TOC: Sfc
- - -

Prod. Csg. Cmt Vol.: 1900 cf
Hole Size: 8.75"
Top Job: No
Rtns to Sfc:
TTOC: Sfc

Liner Cmt Vol.:
Hole Size:
Top Job:
Rtns to Sfc:
TTOC:
- - -
Top of Formation:
UBA: 7310'
BLW: 7960'

Volume Behind Pipe:
1.3 Yield Assumed
Theoretical Calculations (TTOC)

OCCIDENTAL OF ELK HILLS INC

313-34S

Event: WELL MAINT - RIG
Event End: 6/30/2008 00:00
Sec. Reason:
End Status: FINISHED - SUCCESS
Well Classification: DEVELOPMENT

Ground Level: 787.0ft
Datum: ORIGINAL KB @ 801.00ft (default)
API No.: 0402958329

Wellbore: ST1
PBMD: 7,404.0ft
Btm TMD: 7,750.0ft
Spud Date: 11/3/1978 00:00
BH Coord X: 6,145,594.56uss ft
BH Coord Y: 2,290,191.27uss ft

Casing Shoes (ft)	Schematic (7/1/2008)	Openings Top/Btm/Type/Status

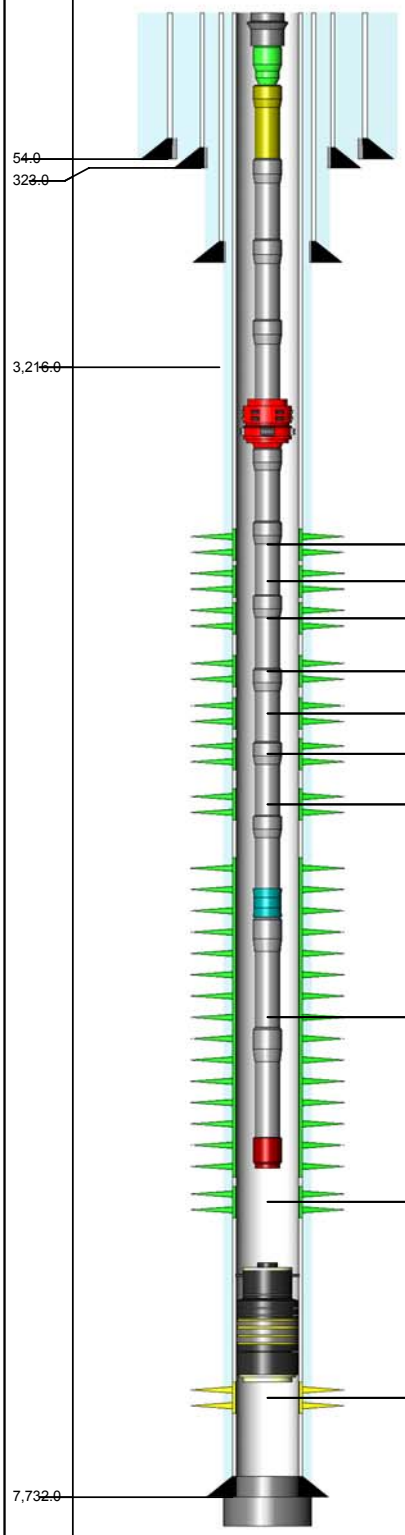

6,972.0ft, 7,010.0ft, PERFORATED, OPEN
7,022.0ft, 7,034.0ft, PERFORATED, OPEN
7,046.0ft, 7,054.0ft, PERFORATED, OPEN
7,100.0ft, 7,130.0ft, PERFORATED, OPEN
7,150.0ft, 7,165.0ft, PERFORATED, OPEN
7,180.0ft, 7,228.0ft, PERFORATED, OPEN
7,250.0ft, 7,305.0ft, PERFORATED, OPEN
7,318.0ft, 7,368.0ft, PERFORATED, OPEN
7,374.0ft, 7,390.0ft, PERFORATED, OPEN
7,408.0ft, 7,452.0ft, PERFORATED, ISOLATE

ROD STRING Report Date: 6/30/2008 00:00

Component	Top MD (ft)	Btm MD (ft)
POLROD	0.0	30.0
PNYROD	30.0	34.0
ROD	34.0	2,464.0
ROD	2,464.0	7,324.0
RSTBAR	7,324.0	7,328.0
INSPMP	7,328.0	7,352.0

TUBING STRING Report Date: 2/15/2008 00:00

Component	Top MD (ft)	Btm MD (ft)
TH-SGL	14.0	14.8
FATNIP	14.8	15.5
PUPJNT	15.5	29.7
TBGJNT	29.7	6,761.6
AC	6,761.6	6,763.9
TBGJNT	6,763.9	7,328.8
STNIP	7,328.8	7,329.9
TBGJNT	7,329.9	7,361.6
STCOLL	7,361.6	7,362.0

PLUG BACK Report Date: 4/4/1980 00:00

Component	Top MD (ft)	Btm MD (ft)
BP-PRM	7,404.0	7,407.0

PLUG BACK Report Date: 8/23/1979 00:00

Component	Top MD (ft)	Btm MD (ft)
CEMENT	7,685.0	7,732.0

PLUG BACK Report Date: 8/22/1979 00:00

Component	Top MD (ft)	Btm MD (ft)
CEMENT	7,732.0	7,750.0

CONDUCTOR CASING Report Date: 11/3/1978 00:00

Item	OD (in)	Grade	Wt. (ppf)	TopMD (ft)	BtmMD (ft)
CASING JOINT(S)	20.000			14.0	54.0

SURFACE CASING Report Date: 7/17/1979 00:00

Item	OD (in)	Grade	Wt. (ppf)	TopMD (ft)	BtmMD (ft)
CASING JOINT(S)	13.375	H-40	48.00	14.0	323.0

INTERMEDIATE CASING Report Date: 7/21/1979 00:00

Item	OD (in)	Grade	Wt. (ppf)	TopMD (ft)	BtmMD (ft)
CASING JOINT(S)	9.625	N-80	40.00	14.0	3,206.0

PRODUCTION CASING Report Date: 8/22/1979 00:00

Item	OD (in)	Grade	Wt. (ppf)	TopMD (ft)	BtmMD (ft)
CASING JOINT(S)	7.000	N-80	26.00	14.0	76.0
CASING JOINT(S)	7.000	K-55	23.00	76.0	5,145.0
CASING JOINT(S)	7.000	K-55	26.00	5,145.0	6,213.0
CASING JOINT(S)	7.000	N-80	26.00	6,213.0	6,428.9
FLAG JOINT	7.000	N-80	26.00	6,428.9	6,449.1
CASING JOINT(S)	7.000	N-80	26.00	6,449.1	7,732.0

Well: 313-34S S/T/R: 34S/30S/24E

CASING CEMENT DETAIL
- - -
Sfc Csg. Cmt Vol.: 553 cf
Hole Size: 17.5"
Top Job: no
Rtns to Sfc: 100 cf
TOC: sfc
- - -

Interm Csg. Cmt Vol.: 1680 cf
Hole Size: 12.25"
Top Job: no
Rtns to Sfc: 10 cf
TOC: sfc
- - -

Prod. Csg. Cmt Vol.: 1800 cf
Hole Size: 8.75"
Top Job: no
Rtns to Sfc: no
TTOC: sfc
- - -

Liner Cmt Vol.:
Hole Size:
Top Job:
Rtns to Sfc :
TTOC:
- - -
Top of Formation:
UBA: 7154'
BLW: 7513'

Volume Behind Pipe:
1.3 Yield Assumed
Theoretical Calculations (TTOC)

Event: WELL MAINT - RIGLESS
Event End: 1/25/2007 00:00
Sec. Reason:
End Status: FINISHED - SUCCESS
Well Classification: INJECTION

OCCIDENTAL OF ELK HILLS INC

313-35S

Ground Level: 675.0ft
Datum: ORIGINAL KB @ 689.00ft (default)
API No.: 0402955945

Wellbore: ORIGINAL HOLE
PBMD: 6,801.0ft
Btm TMD: 9,311.0ft
Spud Date: 5/26/1977 00:00
BH Coord X: 6,151,016.50uss ft
BH Coord Y: 2,289,699.90uss ft

Casing Shoes (ft)	Schematic (2/1/2007)	Openings Top/Btm/Type/Status

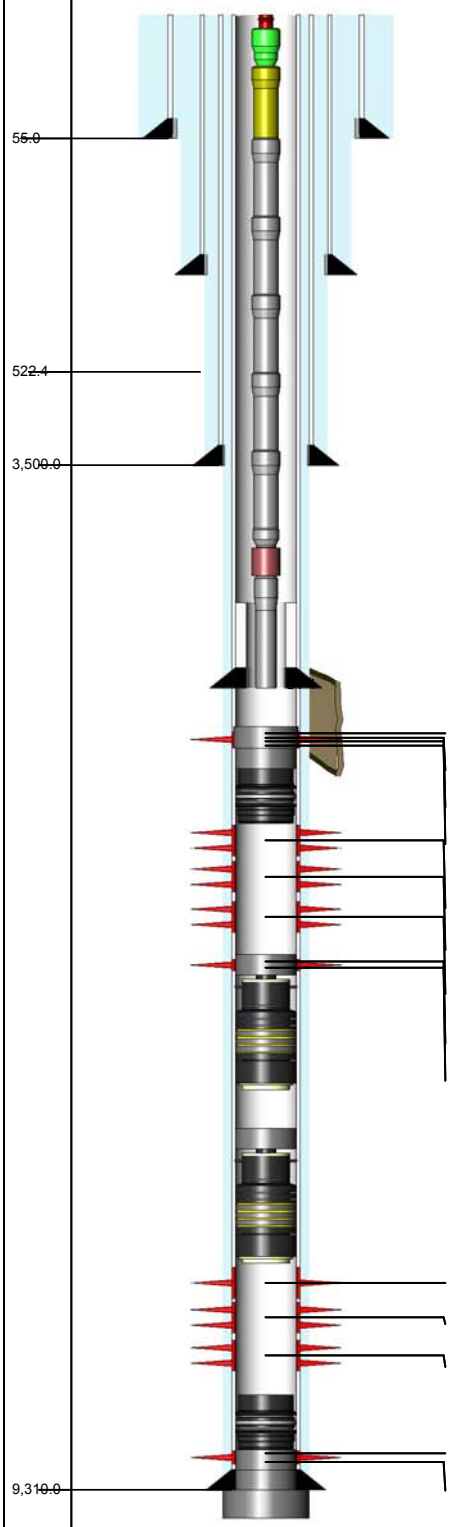

6,980.0ft, 7,035.0ft, PERFORATED, ABANDO
7,060.0ft, 7,090.0ft, PERFORATED, ABANDO
7,110.0ft, 7,150.0ft, PERFORATED, ABANDO
7,175.0ft, 7,225.0ft, PERFORATED, ABANDO
7,252.0ft, 7,270.0ft, PERFORATED, ABANDO
7,295.0ft, 7,345.0ft, PERFORATED, ABANDO
7,372.0ft, 7,390.0ft, PERFORATED, ABANDO
7,520.0ft, 7,595.0ft, PERFORATED, ABANDO
7,620.0ft, 7,725.0ft, PERFORATED, ABANDO
8,600.0ft, 8,685.0ft, PERFORATED, ABANDO
8,710.0ft, 8,790.0ft, PERFORATED, ABANDO
8,820.0ft, 8,900.0ft, PERFORATED, ABANDO
8,940.0ft, 9,026.0ft, PERFORATED, ABANDO
9,090.0ft, 9,170.0ft, PERFORATED, ABANDO

TUBING STRING — Report Date: 2/4/2005 00:00

Component	Top MD (ft)	Btm MD (ft)
TH-DBB	14.0	14.8
FATNIP	14.8	15.4
PUPJNT	15.4	27.6
TBGJNT	27.6	6,374.8
XO	6,374.8	6,375.9
ON-OFF	6,375.9	6,377.1
TBGJNT	6,377.1	6,917.3
PKR-S	6,917.3	6,921.0
TBGJNT	6,921.0	7,046.4
PUPJNT	7,046.4	7,050.5
PKR-S	7,050.5	7,056.2
PUPJNT	7,056.2	7,066.3
PRONIP	7,066.3	7,067.3
PUPJNT	7,067.3	7,077.5
POPLUG	7,077.5	7,079.0

PLUG BACK — Report Date: 10/30/1983 00:00

Component	Top MD (ft)	Btm MD (ft)
CEMENT	6,902.0	7,239.0

PLUG BACK — Report Date: 5/31/1980 00:00

Component	Top MD (ft)	Btm MD (ft)
CEMENT	7,239.0	7,242.0
BP-DR	7,242.0	7,244.0

PLUG BACK — Report Date: 12/21/1979 00:00

Component	Top MD (ft)	Btm MD (ft)
CEMENT	7,437.0	7,797.0
BP-PRM	7,797.0	7,799.0

PLUG BACK — Report Date: 9/19/1979 00:00

Component	Top MD (ft)	Btm MD (ft)
CEMENT	8,552.0	8,560.0
BP-PRM	8,560.0	8,562.0

PLUG BACK — Report Date: 7/12/1979 00:00

Component	Top MD (ft)	Btm MD (ft)
CR-PRM	8,920.0	8,922.0
CEMENT	8,922.0	9,264.0

PLUG BACK — Report Date: 10/7/1977 00:00

Component	Top MD (ft)	Btm MD (ft)
CEMENT	9,264.0	9,310.0

PLUG BACK — Report Date: 10/5/1977 00:00

Component	Top MD (ft)	Btm MD (ft)
CEMENT	9,310.0	9,311.0

CONDUCTOR CASING — Report Date: 5/26/1977 00:00

Item	OD (in)	Grade	Wt. (ppf)	TopMD (ft)	BtmMD (ft)
CASING JOINT(S)	20.000		94.00	14.0	55.0

SURFACE CASING — Report Date: 8/24/1977 00:00

Item	OD (in)	Grade	Wt. (ppf)	TopMD (ft)	BtmMD (ft)
CASING JOINT(S)	13.375	K-55	54.50	14.0	471.3
FLOAT COLLAR	13.375	K-55	54.50	471.3	471.3
CASING JOINT(S)	13.375	K-55	54.50	471.3	511.8
FLOAT SHOE	13.375	K-55	54.50	511.8	513.0

INTERMEDIATE CASING — Report Date: 8/30/1977 00:00

Item	OD (in)	Grade	Wt. (ppf)	TopMD (ft)	BtmMD (ft)
CASING JOINT(S)	9.625	K-55	40.50	14.0	3,456.4
FLOAT COLLAR	9.625	K-55	40.50	3,456.4	3,456.4
CASING JOINT(S)	9.625	K-55	40.50	3,456.4	3,499.0
FLOAT SHOE	9.625	K-55	40.50	3,499.0	3,500.0

PRODUCTION CASING — Report Date: 10/5/1977 00:00

Item	OD (in)	Grade	Wt. (ppf)	TopMD (ft)	BtmMD (ft)
CASING JOINT(S)	7.000	N-80	26.00	14.0	64.0
CASING JOINT(S)	7.000	N-80	23.00	64.0	2,422.0
CASING JOINT(S)	7.000	N-80	26.00	2,422.0	5,973.0
CASING JOINT(S)	7.000	N-80	29.00	5,973.0	9,310.0

LINER — Report Date: 10/26/1990 00:00

Item	OD (in)	Grade	Wt. (ppf)	TopMD (ft)	BtmMD (ft)
LINER HANGER	6.184	K-55	11.60	6,478.0	6,484.8
CASING JOINT(S)	4.500	K-55	11.60	6,484.8	7,172.8
FLOAT COLLAR	4.500	N-80	11.60	7,172.8	7,174.0
CASING JOINT(S)	4.500	N-80	11.60	7,174.0	7,264.2
FLOAT SHOE	4.500	N-80	11.60	7,264.2	7,267.0

Well: 313-35S S/T/R: 35S/30S/24E

CASING CEMENT DETAIL
- - -
Sfc Csg. Cmt Vol.: 590 cf
Hole Size: 17-1/2" (13-3/8" Casing)
Top Job: NO
Rtns to Sfc: YES
TTOC: NA
- - -

Interm Csg. Cmt Vol.: 1750 cf
Hole Size: 12-1/4" (9-5/8" Casing)
Top Job: NO
Rtns to Sfc: YES
TTOC: NA
- - -

Prod. Csg. Cmt Vol.: 2300 cf
Hole Size: 8-3/4" (7" Casing)
Top Job: NO
Rtns to Sfc: NO
TTOC: Surface
- - -

Liner Cmt Vol.: NONE
Hole Size:
Top Job:
Rtns to Sfc:
TTOC:
- - -
Top of Formation:
UBA: 6979'
BLW: 7449'

Volume Behind Pipe:
1.3 Yield Assumed
Theoretical Calculations (TTOC)

Event: WELL MAINT - RIGLESS
Event End: 1/25/2007 00:00
Sec. Reason:
End Status: FINISHED - SUCCESS
Well Classification: INJECTION

OCCIDENTAL OF ELK HILLS INC

313-35S

Ground Level: 675.0ft
Datum: ORIGINAL KB @ 689.00ft (default)
API No.: 0402955945

Wellbore: ST 1
PBMD: 7,412.0ft
Btm TMD: 6,800.0ft
Spud Date: 5/26/1977 00:00
BH Coord X: 6,151,041.93uss ft
BH Coord Y: 2,289,961.38uss ft

Casing Shoes (ft)	Schematic (2/1/2007)	Openings Top/Btm/Type/Status

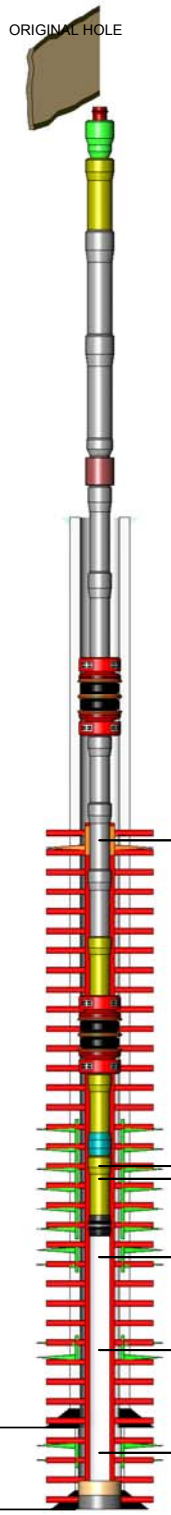

6,987.0ft, 7,040.0ft, PERFORATED, SQUEEZ
6,985.0ft, 7,454.0ft, SLOTTED, ABANDONED
7,064.0ft, 7,096.0ft, PERFORATED, OPEN
7,064.0ft, 7,096.0ft, PERFORATED, OPEN
7,118.0ft, 7,160.0ft, PERFORATED, OPEN
7,118.0ft, 7,160.0ft, PERFORATED, OPEN
7,184.0ft, 7,250.0ft, PERFORATED, OPEN
7,184.0ft, 7,250.0ft, PERFORATED, OPEN
7,326.0ft, 7,366.0ft, PERFORATED, OPEN

TUBING STRING Report Date: 2/4/2005 00:00

Component	Top MD (ft)	Btm MD (ft)
TH-DBB	14.0	14.8
FATNIP	14.8	15.4
PUPJNT	15.4	27.6
TBGJNT	27.6	6,374.8
XO	6,374.8	6,375.9
ON-OFF	6,375.9	6,377.1
TBGJNT	6,377.1	6,917.3
PKR-S	6,917.3	6,921.0
TBGJNT	6,921.0	7,046.4
PUPJNT	7,046.4	7,050.5
PKR-S	7,050.5	7,056.2
PUPJNT	7,056.2	7,066.3
PRONIP	7,066.3	7,067.3
PUPJNT	7,067.3	7,077.5
POPLUG	7,077.5	7,079.0

PLUG BACK Report Date: 6/1/2004 00:00

Component	Top MD (ft)	Btm MD (ft)
FILL	7,400.0	7,412.0

PLUG BACK Report Date: 11/1/1990 00:00

Component	Top MD (ft)	Btm MD (ft)
CEMENT	7,412.0	7,455.0

LINER Report Date: 10/19/1990 00:00

Item	OD (in)	Grade	Wt. (ppf)	TopMD (ft)	BtmMD (ft)
SLOTTED LINER	5.000	K-55	15.00	7,267.0	7,453.8
GUIDE SHOE	5.000			7,453.8	7,455.0

LINER Report Date: 10/26/1990 00:00

Item	OD (in)	Grade	Wt. (ppf)	TopMD (ft)	BtmMD (ft)
LINER HANGER	6.184	K-55	11.60	6,478.0	6,484.8
CASING JOINT(S)	4.500	K-55	11.60	6,484.8	7,172.8
FLOAT COLLAR	4.500	N-80	11.60	7,172.8	7,174.0
CASING JOINT(S)	4.500	N-80	11.60	7,174.0	7,264.2
FLOAT SHOE	4.500	N-80	11.60	7,264.2	7,267.0

Well: 313-35S-RD1 S/T/R: 35S/30S/24E

CASING CEMENT DETAIL
- - -
Sfc Csg. Cmt Vol.: 590 cf
Hole Size: 17-1/2" (13-3/8" Casing)
Top Job: NO
Rtns to Sfc: YES
TOC: NA
- - -

Interm Csg. Cmt Vol.: 1750 cf
Hole Size: 12-1/4" (9-5/8" Casing)
Top Job: NO
Rtns to Sfc: YES
TOC: NA
- - -

Prod. Csg. Cmt Vol.: 2300 cf
Hole Size: 8-3/4" (7" Casing)
Top Job: NO
Rtns to Sfc: NO
TTOC: Surface
- - -

Liner Cmt Vol.: Slotted Liner
Hole Size: 6" (5" Casing)
Top Job: NA
Rtns to Sfc: NA
TTOC: NA
- - -
Top of Formation:
UBA: 6979'
BLW: 7449'

Volume Behind Pipe:
1.3 Yield Assumed
Theoretical Calculations (TTOC)

Event: WELL MAINT - RIGLESS
Event End: 1/25/2007 00:00
Sec. Reason:
End Status: FINISHED - SUCCESS
Well Classification: INJECTION

OCCIDENTAL OF ELK HILLS INC

313-35S

Ground Level: 675.0ft
Datum: ORIGINAL KB @ 689.00ft (default)
API No.: 0402955945

Wellbore: ST 1
PBMD: 7,412.0ft
Btm TMD: 7,455.0ft
Spud Date: 5/26/1977 00:00
BH Coord X: 6,151,056.24uss ft
BH Coord Y: 2,289,924.79uss ft

Casing Shoes (ft)	Schematic (2/1/2007)	Openings Top/Btm/Type/Status

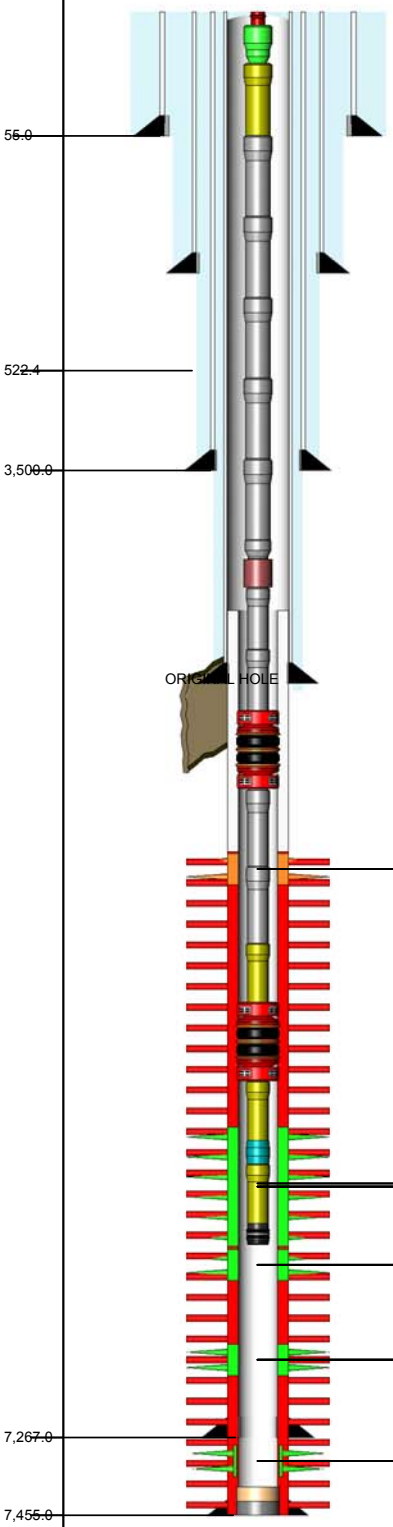

6,987.0ft, 7,040.0ft, PERFORATED, SQUEEZ
6,985.0ft, 7,454.0ft, SLOTTED, ABANDONED
7,064.0ft, 7,096.0ft, PERFORATED, OPEN
7,064.0ft, 7,096.0ft, PERFORATED, OPEN
7,118.0ft, 7,160.0ft, PERFORATED, OPEN
7,118.0ft, 7,160.0ft, PERFORATED, OPEN
7,184.0ft, 7,250.0ft, PERFORATED, OPEN
7,184.0ft, 7,250.0ft, PERFORATED, OPEN
7,326.0ft, 7,366.0ft, PERFORATED, OPEN

TUBING STRING — Report Date: 2/4/2005 00:00

Component	Top MD (ft)	Btm MD (ft)
TH-DBB	14.0	14.8
FATNIP	14.8	15.4
PUPJNT	15.4	27.6
TBGJNT	27.6	6,374.8
XO	6,374.8	6,375.9
ON-OFF	6,375.9	6,377.1
TBGJNT	6,377.1	6,917.3
PKR-S	6,917.3	6,921.0
TBGJNT	6,921.0	7,046.4
PUPJNT	7,046.4	7,050.5
PKR-S	7,050.5	7,056.2
PUPJNT	7,056.2	7,066.3
PRONIP	7,066.3	7,067.3
PUPJNT	7,067.3	7,077.5
POPLUG	7,077.5	7,079.0

PLUG BACK — Report Date: 6/1/2004 00:00

Component	Top MD (ft)	Btm MD (ft)
FILL	7,400.0	7,412.0

PLUG BACK — Report Date: 11/1/1990 00:00

Component	Top MD (ft)	Btm MD (ft)
CEMENT	7,412.0	7,455.0

CONDUCTOR CASING — Report Date: 5/26/1977 00:00

Item	OD (in)	Grade	Wt. (ppf)	TopMD (ft)	BtmMD (ft)
CASING JOINT(S)	20.000		94.00	14.0	55.0

SURFACE CASING — Report Date: 8/24/1977 00:00

Item	OD (in)	Grade	Wt. (ppf)	TopMD (ft)	BtmMD (ft)
CASING JOINT(S)	13.375	K-55	54.50	14.0	471.3
FLOAT COLLAR	13.375	K-55	54.50	471.3	471.3
CASING JOINT(S)	13.375	K-55	54.50	471.3	511.8
FLOAT SHOE	13.375	K-55	54.50	511.8	513.0

INTERMEDIATE CASING — Report Date: 8/30/1977 00:00

Item	OD (in)	Grade	Wt. (ppf)	TopMD (ft)	BtmMD (ft)
CASING JOINT(S)	9.625	K-55	40.50	14.0	3,456.4
FLOAT COLLAR	9.625	K-55	40.50	3,456.4	3,456.4
CASING JOINT(S)	9.625	K-55	40.50	3,456.4	3,499.0
FLOAT SHOE	9.625	K-55	40.50	3,499.0	3,500.0

PRODUCTION CASING — Report Date: 10/5/1977 00:00

Item	OD (in)	Grade	Wt. (ppf)	TopMD (ft)	BtmMD (ft)
CASING JOINT(S)	7.000	N-80	26.00	14.0	64.0
CASING JOINT(S)	7.000	N-80	23.00	64.0	2,422.0
CASING JOINT(S)	7.000	N-80	26.00	2,422.0	5,973.0
CASING JOINT(S)	7.000	N-80	29.00	5,973.0	9,310.0

LINER — Report Date: 10/19/1990 00:00

Item	OD (in)	Grade	Wt. (ppf)	TopMD (ft)	BtmMD (ft)
SLOTTED LINER	5.000	K-55	15.00	7,267.0	7,453.8
GUIDE SHOE	5.000			7,453.8	7,455.0

LINER — Report Date: 10/26/1990 00:00

Item	OD (in)	Grade	Wt. (ppf)	TopMD (ft)	BtmMD (ft)
LINER HANGER	6.184	K-55	11.60	6,478.0	6,484.8
CASING JOINT(S)	4.500	K-55	11.60	6,484.8	7,172.8
FLOAT COLLAR	4.500	N-80	11.60	7,172.8	7,174.0
CASING JOINT(S)	4.500	N-80	11.60	7,174.0	7,264.2
FLOAT SHOE	4.500	N-80	11.60	7,264.2	7,267.0

Well: 313-35S-RD1 S/T/R: 35S/30S/24E

CASING CEMENT DETAIL
- - -
Sfc Csg. Cmt Vol.: 590 cf
Hole Size: 17-1/2" (13-3/8" Casing)
Top Job: NO
Rtns to Sfc: YES
TOC: NA
- - -

Interm Csg. Cmt Vol.: 1750 cf
Hole Size: 12-1/4" (9-5/8" Casing)
Top Job: NO
Rtns to Sfc: YES
TOC: NA
- - -

Prod. Csg. Cmt Vol.: 2300 cf
Hole Size: 8-3/4" (7" Casing)
Top Job: NO
Rtns to Sfc: NO
TTOC: Surface
- - -

Liner Cmt Vol.: Slotted Liner
Hole Size: 6" (5" Casing)
Top Job: NA
Rtns to Sfc: NA
TTOC: NA
- - -
Top of Formation:
UBA: 6979'
BLW: 7449'

Volume Behind Pipe:
1.3 Yield Assumed
Theoretical Calculations (TTOC)

OCCIDENTAL OF ELK HILLS INC

313-3G

Event: WELL MAINT - RIGLESS
Event End: 9/24/2003 00:00
Sec. Reason: INJECTION PROFILE SURVEY

Ground Level: 1,031.0ft
Datum: ORIGINAL KB @ 1,045.00ft (default)
API No.: 0402954298

Wellbore: ORIGINAL HOLE
PBMD: 7,699.0ft
Btm TMD: 8,000.0ft
Spud Date: 10/7/1976 00:00
BH Coord X: 6,145,727.80uss ft
BH Coord Y: 2,285,146.00uss ft

Casing Shoes (ft) | Schematic (10/1/2003) | Openings Top/Btm/Type/Status

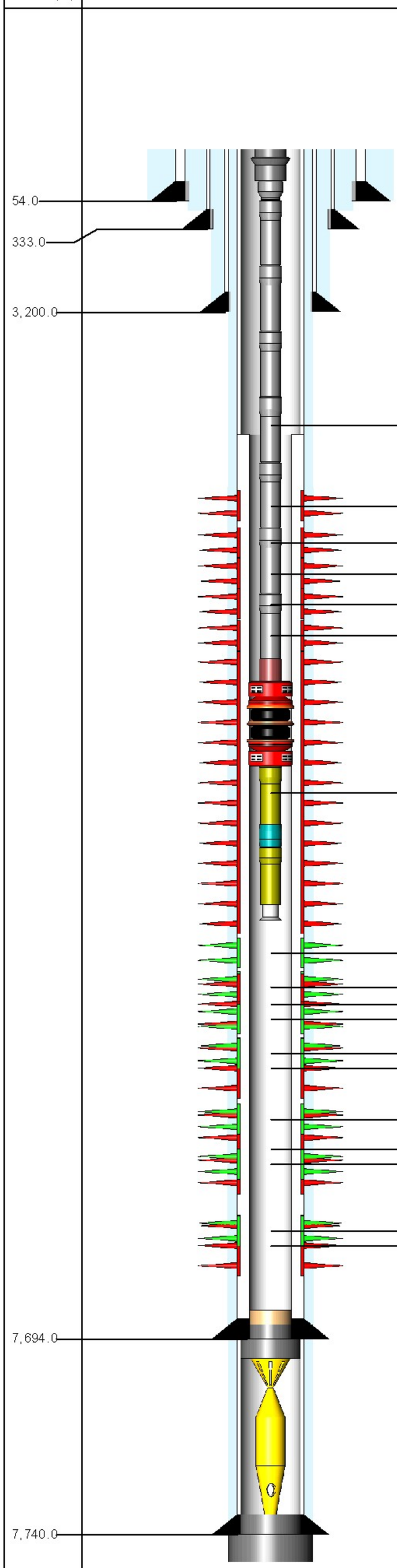

6,390.0ft, 6,391.0ft, WSO PERFS, SQUEEZE
6,858.0ft, 6,908.0ft, PERFORATED, ABANDO
7,076.0ft, 7,088.0ft, PERFORATED, ABANDO
7,110.0ft, 7,157.0ft, PERFORATED, ABANDO
7,168.0ft, 7,202.0ft, PERFORATED, ABANDO
7,220.0ft, 7,292.0ft, PERFORATED, ABANDO
7,302.0ft, 7,406.0ft, PERFORATED, ABANDO
7,418.0ft, 7,432.0ft, PERFORATED, OPEN
7,443.0ft, 7,456.0ft, PERFORATED, OPEN
7,444.0ft, 7,476.0ft, PERFORATED, ABANDO
7,462.0ft, 7,476.0ft, PERFORATED, OPEN
7,486.1ft, 7,500.1ft, PERFORATED, OPEN
7,486.0ft, 7,504.0ft, PERFORATED, ABANDO
7,517.0ft, 7,540.0ft, PERFORATED, OPEN
7,516.0ft, 7,592.0ft, PERFORATED, ABANDO
7,566.0ft, 7,586.0ft, PERFORATED, OPEN
7,610.1ft, 7,630.0ft, PERFORATED, OPEN
7,610.0ft, 7,634.0ft, PERFORATED, ABANDO

TUBING STRING Report Date: 10/9/2001 00:00

Component	Top MD (ft)	Btm MD (ft)
TH-SGL	14.0	14.6
XO	14.6	15.2
TBGJNT	15.2	7,348.0
ON-OFF	7,348.0	7,349.4
PKR-S	7,349.4	7,352.9
PUPJNT	7,352.9	7,358.9
PRONIP	7,358.9	7,360.0
PUPJNT	7,360.0	7,364.0
BELCOL	7,364.0	7,364.4

PLUG BACK Report Date: 9/24/2003 00:00

Component	Top MD (ft)	Btm MD (ft)
FILL	7,639.0	7,684.0

PLUG BACK Report Date: 10/6/2001 00:00

Component	Top MD (ft)	Btm MD (ft)
CEMENT	7,684.0	7,694.0

PLUG BACK Report Date: 10/6/2001 00:00

Component	Top MD (ft)	Btm MD (ft)
CEMENT	7,694.0	7,697.0

PLUG BACK Report Date: 10/3/2001 00:00

Component	Top MD (ft)	Btm MD (ft)
JUNK	7,697.0	7,699.0

PLUG BACK Report Date: 3/20/1977 00:00

Component	Top MD (ft)	Btm MD (ft)
CEMENT	7,699.0	7,740.0

PLUG BACK Report Date: 3/18/1977 00:00

Component	Top MD (ft)	Btm MD (ft)
CEMENT	7,740.0	8,000.0

CONDUCTOR CASING Report Date: 10/7/1976 00:00

Item	OD (in)	Grade	Wt. (ppf)	TopMD (ft)	BtmMD (ft)
CASING JOINT(S)	20.000			14.0	54.0

SURFACE CASING Report Date: 2/21/1977 00:00

Item	OD (in)	Grade	Wt. (ppf)	TopMD (ft)	BtmMD (ft)
CASING JOINT(S)	13.375	H-40	48.00	14.0	333.0

INTERMEDIATE CASING Report Date: 2/25/1977 00:00

Item	OD (in)	Grade	Wt. (ppf)	TopMD (ft)	BtmMD (ft)
CASING JOINT(S)	9.625	K-55	40.00	14.0	3,200.0

PRODUCTION CASING Report Date: 3/18/1977 00:00

Item	OD (in)	Grade	Wt. (ppf)	TopMD (ft)	BtmMD (ft)
CASING JOINT(S)	7.000	K-55	26.00	14.0	77.4
CASING JOINT(S)	7.000	K-55	23.00	77.4	4,886.8
CASING JOINT(S)	7.000	K-55	26.00	4,886.8	7,699.0
FLOAT COLLAR	7.000			7,699.0	7,700.9
CASING JOINT(S)	7.000	K-55	26.00	7,700.9	7,737.5
FLOAT SHOE	7.000			7,737.5	7,740.0

INNER LINER Report Date: 10/3/2001 00:00

Item	OD (in)	Grade	Wt. (ppf)	TopMD (ft)	BtmMD (ft)
LINER HANGER	7.000		26.00	6,669.2	6,682.9
CASING JOINT(S)	5.000	N-80	15.00	6,682.9	6,730.0
CASING JOINT(S)	5.000	N-80	15.00	6,730.0	7,597.2
CASING JOINT(S)	5.000	N-80	15.00	7,597.2	7,644.0
LANDING COLLAR	5.000	N-80	15.00	7,644.0	7,644.8
FLOAT COLLAR	5.000	N-80	15.00	7,644.8	7,645.6
CASING JOINT(S)	5.000	N-80	15.00	7,645.6	7,692.4
FLOAT SHOE	5.000	N-80	15.00	7,692.4	7,694.0

Well: 313-3G S/T/R: 3G/30S/24E

CASING CEMENT DETAIL
- - -
Sfc Csg. Cmt Vol.: 366 cf
Hole Size: 17.5
Top Job: no
Rtns to Sfc: 25 cf
TOC: sfc
- - -

Interm Csg. Cmt Vol.: 1603 cf
Hole Size: 12.25
Top Job: no
Rtns to Sfc: 75 cf
TOC: sfc
- - -

Prod. Csg. Cmt Vol.: 2200 cf
Hole Size: 8.75
Top Job: no
Rtns to Sfc: no
TTOC: sfc

Liner Cmt Vol.:
Hole Size:
Top Job:
Rtns to Sfc:
TOC:
- - -
Top of Formation:
UBA: 7109'
BLW: 7730'

Volume Behind Pipe:
1.3 Yield Assumed
Theoretical Calculations (TTOC)

Event: WELL ENHANCEMENT
Event End:
Sec. Reason:
End Status:
Well Classification: DEVELOPMENT

OCCIDENTAL OF ELK HILLS INC

314-34S

Ground Level: 797.0ft
Datum: ORIGINAL KB @ 815.00ft (default)
API No.: 0402967783

Wellbore: ST1
PBMD: 7,508.0ft
Btm TMD: 7,600.0ft
Spud Date: 10/1/1982 00:00
BH Coord X: 6,145,758.27uss ft
BH Coord Y: 2,289,527.84uss ft

Casing Shoes (ft)	Schematic (6/1/2007)	Openings Top/Btm/Type/Status

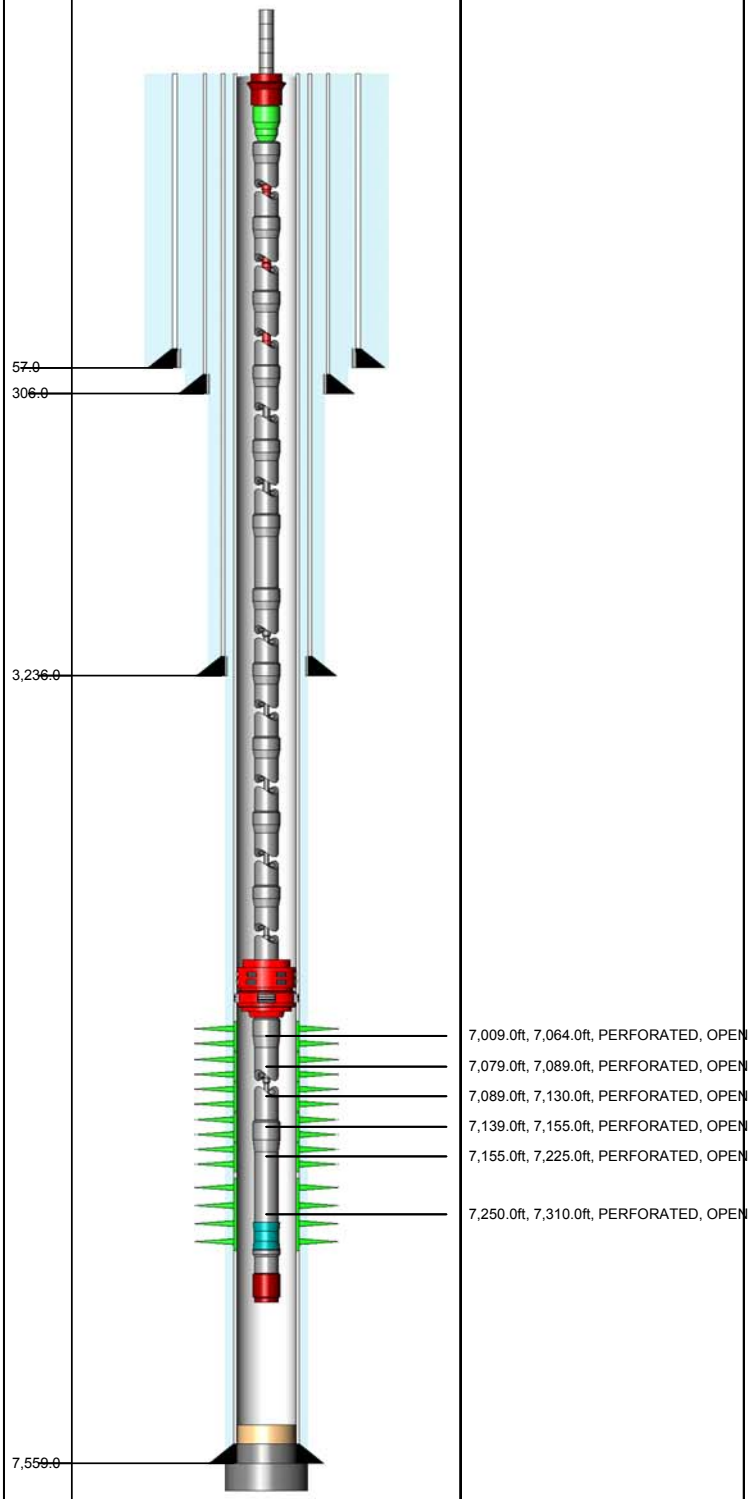

ROD STRING Report Date: 5/17/2007 00:00

Component	Top MD (ft)	Btm MD (ft)
POLROD	0.0	30.0
PNYROD	30.0	46.0
ROD	46.0	1,756.0
ROD	1,756.0	3,466.0
ROD	3,466.0	5,086.0
R-4PER	5,086.0	7,276.0
INSPMP	7,276.0	7,302.0

TUBING STRING Report Date: 5/16/2007 00:00

Component	Top MD (ft)	Btm MD (ft)
TH-DBB	18.0	18.8
FATNIP	18.8	19.4
CAS	19.4	6,937.6
AC	6,937.6	6,939.9
CAS	6,939.9	7,307.3
STNIP	7,307.3	7,308.4
CAS	7,308.4	7,339.8
STCOLL	7,339.8	7,340.2

PLUG BACK Report Date: 5/20/2003 00:00

Component	Top MD (ft)	Btm MD (ft)
FILL	7,501.0	7,508.0

PLUG BACK Report Date: 12/31/1982 00:00

Component	Top MD (ft)	Btm MD (ft)
CEMENT	7,508.0	7,559.0

PLUG BACK Report Date: 12/5/1982 00:00

Component	Top MD (ft)	Btm MD (ft)
CEMENT	7,559.0	7,560.0

CONDUCTOR CASING Report Date: 10/20/1982 00:00

Item	OD (in)	Grade	Wt. (ppf)	TopMD (ft)	BtmMD (ft)
CASING JOINT(S)	20.000			18.0	57.0

SURFACE CASING Report Date: 10/28/1982 00:00

Item	OD (in)	Grade	Wt. (ppf)	TopMD (ft)	BtmMD (ft)
CASING JOINT(S)	13.375	H-40	48.00	18.0	306.0

INTERMEDIATE CASING Report Date: 11/2/1982 00:00

Item	OD (in)	Grade	Wt. (ppf)	TopMD (ft)	BtmMD (ft)
CASING JOINT(S)	9.625	K-55	40.00	18.0	3,236.0

PRODUCTION CASING Report Date: 12/5/1982 00:00

Item	OD (in)	Grade	Wt. (ppf)	TopMD (ft)	BtmMD (ft)
CASING JOINT(S)	7.000	N-80	26.00	18.0	102.0
CASING JOINT(S)	7.000	K-55	23.00	102.0	5,006.0
CASING JOINT(S)	7.000	K-55	26.00	5,006.0	6,425.5
FLAG JOINT	7.000	K-55	26.00	6,425.5	6,450.0
CASING JOINT(S)	7.000	K-55	26.00	6,450.0	6,615.0
CASING JOINT(S)	7.000	N-80	26.00	6,615.0	7,559.0

Well: 314-34S S/T/R: 34S/30S/24E

CASING CEMENT DETAIL
- - -
Sfc Csg. Cmt Vol.: 475 cf
Hole Size: 17.5"
Top Job: no
Rtns to Sfc: 50 cf
TOC: sfc
- - -

Interm Csg. Cmt Vol.: 1500 cf
Hole Size: 12.25"
Top Job: no
Rtns to Sfc: 85 cf
TOC: sfc
- - -

Prod. Csg. Cmt Vol.: 1675 cf
Hole Size: 8.75"
Top Job: no
Rtns to Sfc: trace
TOC: sfc
- - -

Liner Cmt Vol.:
Hole Size:
Top Job:
Rtns to Sfc :
TTOC:
- - -
Top of Formation:
UBA: 7007'
BLW: 7360'

Volume Behind Pipe:
1.3 Yield Assumed
Theoretical Calculations (TTOC)

Event: WELL ENHANCEMENT
Event End: 3/1/2008 00:00
Sec. Reason:
End Status: FINISHED - SUCCESS
Well Classification: DEVELOPMENT

OCCIDENTAL OF ELK HILLS INC

314-35S

Ground Level: 716.1ft
Datum: ORIGINAL KB @ 736.12ft (default)
API No.: 0403000739

Wellbore: ORIGINAL HOLE
PBMD: 7,349.0ft
Btm TMD: 7,450.0ft
Spud Date: 6/30/1993 00:00
BH Coord X: 6,151,074.66uss ft
BH Coord Y: 2,289,343.99uss ft

Casing Shoes (ft)	Schematic (4/1/2008)	Openings Top/Btm/Type/Status

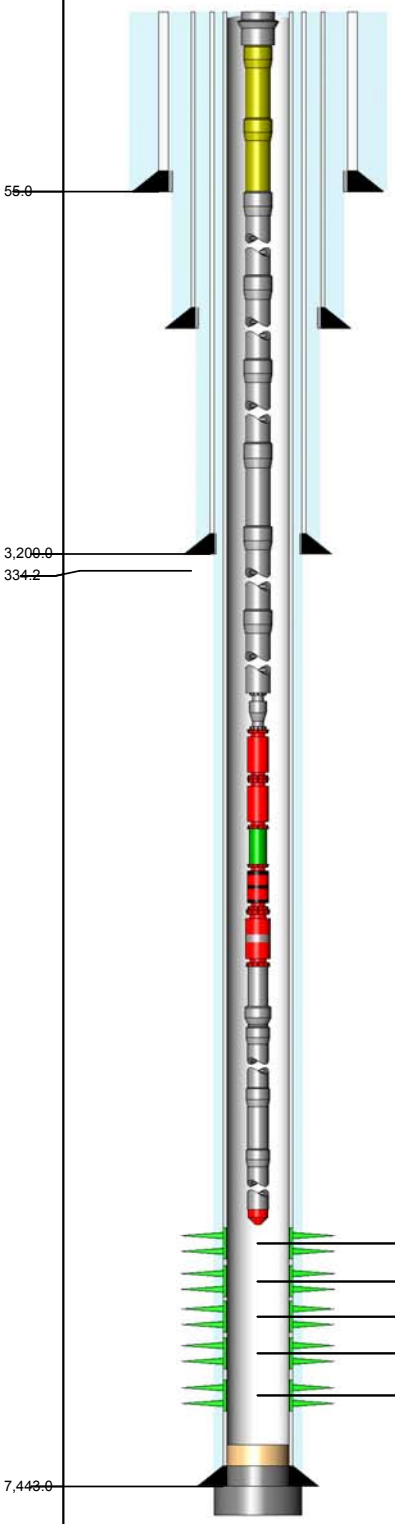

6,746.0ft, 6,820.0ft, PERFORATED, OPEN
6,875.0ft, 6,967.0ft, PERFORATED, OPEN
6,993.0ft, 7,090.0ft, PERFORATED, OPEN
7,115.0ft, 7,260.0ft, PERFORATED, OPEN
7,275.0ft, 7,310.0ft, PERFORATED, OPEN

TUBING STRING W/ ESP Report Date: 8/24/2007 00:00

Component	Top MD (ft)	Btm MD (ft)
TH	20.0	20.6
PUPJNT	20.6	30.8
PUPJNT	30.8	40.9
CAS	40.9	6,624.0
ESPDIS	6,624.0	6,624.6
ESPPMP	6,624.6	6,639.0
ESPPMP	6,639.0	6,653.8
ESPISN	6,653.8	6,657.1
ESPPRT	6,657.1	6,665.3
ESPMTR	6,665.3	6,682.5
ESPSEN	6,682.5	6,684.4
XO	6,684.4	6,685.0
CAS	6,685.0	6,716.3
BULPLG	6,716.3	6,716.5

PLUG BACK Report Date: 1/2/2002 00:00

Component	Top MD (ft)	Btm MD (ft)
FILL	7,322.0	7,349.0

PLUG BACK Report Date: 11/16/1993 00:00

Component	Top MD (ft)	Btm MD (ft)
CEMENT	7,349.0	7,443.0

PLUG BACK Report Date: 11/9/1993 00:00

Component	Top MD (ft)	Btm MD (ft)
CEMENT	7,443.0	7,450.0

CONDUCTOR CASING Report Date: 6/30/1993 00:00

Item	OD (in)	Grade	Wt. (ppf)	TopMD (ft)	BtmMD (ft)
CASING JOINT(S)	20.000			20.0	55.0

SURFACE CASING Report Date: 10/15/1993 00:00

Item	OD (in)	Grade	Wt. (ppf)	TopMD (ft)	BtmMD (ft)
CASING JOINT(S)	13.375	K-55	54.50	20.0	270.6
	13.375	K-55	54.50	270.6	270.6
CASING JOINT(S)	13.375	K-55	54.50	270.6	309.5
GUIDE SHOE	13.375	K-55	54.50	309.5	311.0

INTERMEDIATE CASING Report Date: 10/22/1993 00:00

Item	OD (in)	Grade	Wt. (ppf)	TopMD (ft)	BtmMD (ft)
CASING JOINT(S)	9.625	K-55	40.00	20.0	507.4
CASING JOINT(S)	9.625	K-55	36.00	507.4	3,163.1
	9.625	K-55	36.00	3,163.1	3,163.1
CASING JOINT(S)	9.625	K-55	36.00	3,163.1	3,198.8
GUIDE SHOE	9.625	K-55	36.00	3,198.8	3,200.0

PRODUCTION CASING Report Date: 11/9/1993 00:00

Item	OD (in)	Grade	Wt. (ppf)	TopMD (ft)	BtmMD (ft)
CASING JOINT(S)	7.000	N-80	26.00	20.0	1,014.5
CASING JOINT(S)	7.000	K-55	26.00	1,014.5	2,281.0
CASING JOINT(S)	7.000	K-55	23.00	2,281.0	4,261.0
CASING JOINT(S)	7.000	K-55	26.00	4,261.0	6,200.3
CASING JOINT(S)	7.000	N-80	26.00	6,200.3	6,467.4
FLAG JOINT	7.000	N-80	26.00	6,467.4	6,484.0
CASING JOINT(S)	7.000	N-80	26.00	6,484.0	7,349.2
FLOAT COLLAR	7.000	N-80	26.00	7,349.2	7,350.9
CASING JOINT(S)	7.000	N-80	26.00	7,350.9	7,440.8
GUIDE SHOE	7.000	N-80	26.00	7,440.8	7,443.0

Well: 314-35S S/T/R: 35S/30S/24E

CASING CEMENT DETAIL
- - -
Sfc Csg. Cmt Vol.: 500 cf
Hole Size: 17-1/2" (13-3/8' Casing)
Top Job: NO
Rtns to Sfc: YES
TOC: NA
- - -

Interm Csg. Cmt Vol.: 1650 cf
Hole Size: 12-1/4" (9-5/8" Casing)
Top Job: No
Rtns to Sfc: YES
TOC: NA
- - -

Prod. Csg. Cmt Vol.: 3400 cf
Hole Size: 8-3/4" (7" Casing)
Top Job: NO
Rtns to Sfc: NO
TTOC: Surface
- - -

Liner Cmt Vol.: NONE
Hole Size:
Top Job:
Rtns to Sfc:
TTOC:
- - -
Top of Formation:
UBA: 6985'
BLW: 7414'

Volume Behind Pipe:
1.3 Yield Assumed
Theoretical Calculations (TTOC)

Event: WELL MAINT - RIG
Event End: 7/25/2008 00:00
Sec. Reason: LOW PRODUCTION
End Status: FINISHED - SUCCESS
Well Classification: DEVELOPMENT

OCCIDENTAL OF ELK HILLS INC

314-36S

Ground Level: 642.6ft
Datum: ORIGINAL KB @ 665.60ft (default)
API No.: 0403027316

Wellbore: ORIGINAL HOLE
PBMD: 9,048.7ft
Btm TMD: 9,048.7ft
Spud Date: 5/14/2005 00:00
BH Coord X: 6,158,011.51uss ft
BH Coord Y: 2,289,877.92uss ft

Casing Shoes (ft)	Schematic (8/1/2008)	Openings Top/Btm/Type/Status

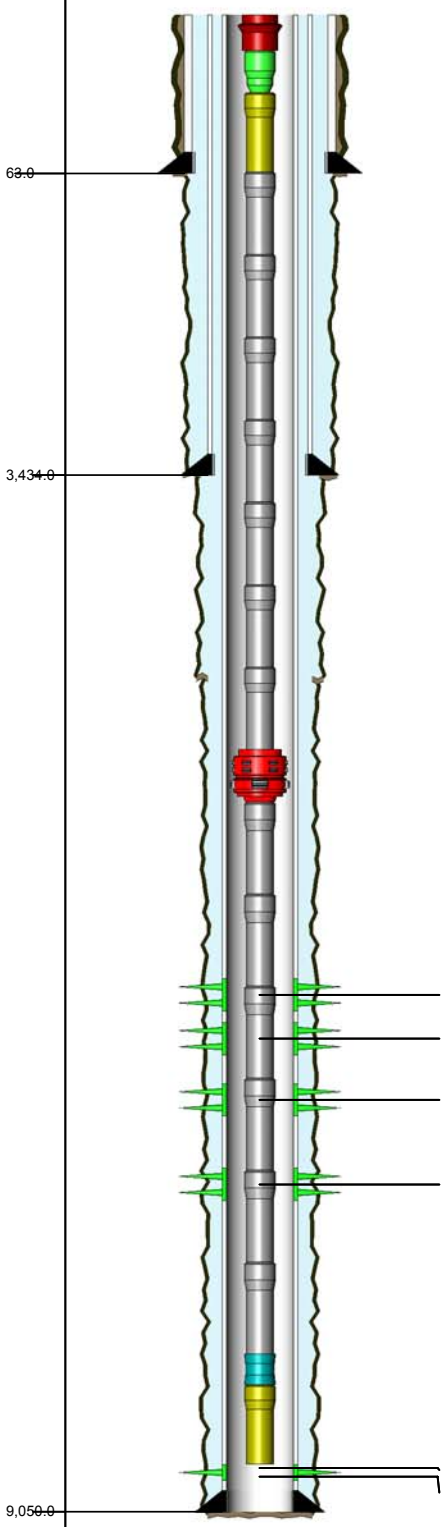

8,540.0ft, 8,602.0ft, PERFORATED, OPEN
8,610.0ft, 8,637.0ft, PERFORATED, OPEN
8,654.0ft, 8,704.0ft, PERFORATED, OPEN
8,722.0ft, 8,772.0ft, PERFORATED, OPEN
8,784.0ft, 8,826.0ft, PERFORATED, OPEN
8,832.0ft, 8,874.0ft, PERFORATED, OPEN

ROD STRING — Report Date: 7/25/2008 00:00

Component	Top MD (ft)	Btm MD (ft)
POLRDL	0.0	36.0
PNYROD	36.0	42.0
ROD	42.0	72.0
COROD	72.0	1,046.0
COROD	1,046.0	2,700.0
COROD	2,700.0	8,653.0
RSTBAR	8,653.0	8,657.0
ON-OFF	8,657.0	8,658.0
RSTBAR	8,658.0	8,662.0
ROD	8,662.0	8,722.0
INSPMP	8,722.0	8,746.0

TUBING STRING — Report Date: 7/22/2008 00:00

Component	Top MD (ft)	Btm MD (ft)
TH-DBB	23.0	23.7
FATNIP	23.7	24.4
PUPJNT	24.4	30.7
TBGJNT	30.7	8,368.7
AC	8,368.7	8,371.1
TBGJNT	8,371.1	8,774.8
STNIP	8,774.8	8,775.9
PUPJNT	8,775.9	8,782.0

CONDUCTOR CASING — Report Date: 5/9/2005 00:00

Item	OD (in)	Grade	Wt. (ppf)	TopMD (ft)	BtmMD (ft)
CASING JOINT(S)	14.000			23.0	63.0

SURFACE CASING — Report Date: 5/17/2005 00:00

Item	OD (in)	Grade	Wt. (ppf)	TopMD (ft)	BtmMD (ft)
CASING JOINT(S)	9.625	K-55	36.00	23.0	3,386.6
FLOAT COLLAR	9.625	K-55	36.00	3,386.6	3,387.5
CASING JOINT(S)	9.625	K-55	36.00	3,387.5	3,433.1
GUIDE SHOE	9.625	K-55	36.00	3,433.1	3,434.0

PRODUCTION CASING — Report Date: 6/4/2005 00:00

Item	OD (in)	Grade	Wt. (ppf)	TopMD (ft)	BtmMD (ft)
CASING JOINT(S)	7.000	N-80	26.00	23.0	6,756.0
FLAG JOINT	7.000	N-80	26.00	6,756.0	6,774.9
CASING JOINT(S)	7.000	N-80	26.00	6,774.9	8,954.2
FLOAT COLLAR	7.000	N-80	26.00	8,954.2	8,955.1
CASING JOINT(S)	7.000	N-80	26.00	8,955.1	9,048.7
FLOAT SHOE	7.000	N-80	26.00	9,048.7	9,050.0

Well: 314-36S S/T/R: 35S/30S/24E

CASING CEMENT DETAIL
- - -
Sfc Csg. Cmt Vol.: 1466 cf
Hole Size: 12.25"
Top Job: no
Rtns to Sfc: 112 cf
TOC: sfc
- - -

Interm Csg. Cmt Vol.:
Hole Size:
Top Job:
Rtns to Sfc:
TOC:
- - -

Prod. Csg. Cmt Vol.:
Hole Size:
Top Job:
Rtns to Sfc:
TTOC:
- - -

Liner Cmt Vol.: 2618 cf
Hole Size: 8.75"
Top Job: no
Rtns to Sfc: no
TTOC: sfc
- - -
Top of Formation:
UBA: 8976'
BLW: N/A

Volume Behind Pipe:
1.3 Yield Assumed
Theoretical Calculations (TTOC)

OCCIDENTAL OF ELK HILLS INC

314-3G

Event: WELL MAINT - RIG
Event End:
Sec. Reason:

Ground Level: 1,021.0ft
Datum: ORIGINAL KB @ 1,030.00ft (default)
API No.: 0402929018

Wellbore: ORIGINAL HOLE
PBMD: 7,215.0ft
Btm TMD: 8,000.0ft
Spud Date: 12/1/1952 00:00
BH Coord X: 6,145,772.00uss ft
BH Coord Y: 2,284,559.00uss ft

Casing Shoes (ft)	Schematic (8/1/2005)	Openings Top/Btm/Type/Status
39.0		
193.0		
3,340.0		
		6,483.0ft, 6,484.0ft, WSO PERFS, SQUEEZED
		6,660.0ft, 6,680.0ft, PERFORATED, OPEN
		6,890.0ft, 6,930.0ft, PERFORATED, ABANDONED
		6,950.0ft, 7,050.0ft, PERFORATED, ABANDONED
		7,014.0ft, 7,050.0ft, PERFORATED, OPEN
		7,069.0ft, 7,113.0ft, PERFORATED, ABANDONED
		7,068.0ft, 7,114.0ft, PERFORATED, OPEN
7,184.0		7,126.0ft, 7,172.0ft, PERFORATED, ABANDONED
		7,126.0ft, 7,172.0ft, PERFORATED, OPEN
		7,344.0ft, 7,370.0ft, PERFORATED, ABANDONED
		7,344.1ft, 7,370.1ft, PERFORATED, ABANDONED
		7,395.0ft, 7,424.0ft, PERFORATED, ABANDONED
		7,395.1ft, 7,424.1ft, PERFORATED, ABANDONED
		7,448.0ft, 7,493.0ft, PERFORATED, ABANDONED
		7,448.1ft, 7,493.1ft, PERFORATED, ABANDONED
		7,521.0ft, 7,565.0ft, PERFORATED, ABANDONED
		7,521.1ft, 7,565.1ft, PERFORATED, ABANDONED
		7,590.0ft, 7,614.0ft, PERFORATED, ABANDONED
		7,590.1ft, 7,614.1ft, PERFORATED, ABANDONED
		7,648.0ft, 7,675.0ft, PERFORATED, ABANDONED
		7,700.0ft, 7,720.0ft, PERFORATED, ABANDONED
		7,744.0ft, 7,776.0ft, PERFORATED, ABANDONED
		7,800.0ft, 7,820.0ft, PERFORATED, ABANDONED
		7,845.0ft, 7,908.0ft, PERFORATED, ABANDONED
7,989.8		

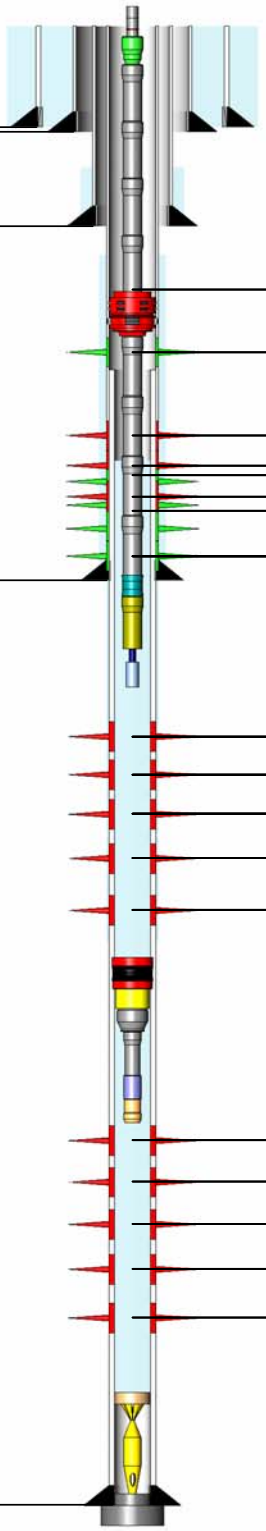

ROD STRING Report Date: 7/30/2005 00:00

Component	Top MD (ft)	Btm MD (ft)
POLROD	0.0	30.0
PNYROD	30.0	32.0
ROD	32.0	3,152.0
ROD	3,152.0	7,202.0
RSTBAR	7,202.0	7,206.0
INSPMP	7,206.0	7,231.0

TUBING STRING Report Date: 6/23/2005 00:00

Component	Top MD (ft)	Btm MD (ft)
TH-DBB	9.0	9.8
FATNIP	9.8	10.4
TBGJNT	10.4	6,580.1
AC	6,580.1	6,582.5
TBGJNT	6,582.5	7,183.8
STNIP	7,183.8	7,184.5
PUPJNT	7,184.5	7,190.6

PACKER ASSEMBLY (PERMANENT) Report Date: 8/17/2000 00:00

Component	Top MD (ft)	Btm MD (ft)
PKR-D	7,625.8	7,628.3
MOEXT	7,628.3	7,633.3
XO	7,633.3	7,633.8
TBGJNT	7,633.8	7,639.4
NOGO-O	7,639.4	7,640.5
WLREG	7,640.5	7,640.9

PLUG BACK Report Date: 8/17/2000 00:00

Component	Top MD (ft)	Btm MD (ft)
FILL	7,923.0	7,928.4

PLUG BACK Report Date: 2/21/1992 00:00

Component	Top MD (ft)	Btm MD (ft)
JUNK	7,928.4	7,944.0

PLUG BACK Report Date: 9/9/1978 00:00

Component	Top MD (ft)	Btm MD (ft)
CEMENT	7,944.0	7,989.8

PLUG BACK Report Date: 9/7/1978 00:00

Component	Top MD (ft)	Btm MD (ft)
CEMENT	7,989.8	7,990.0

CONDUCTOR CASING Report Date: 12/24/1952 00:00

n	OD (in)	Grade	Wt. (ppf)	TopMD (ft)	BtmMD (ft)
SING JOINT(S)	26.000		68.00	9.0	39.0

SURFACE CASING Report Date: 3/20/1953 00:00

n	OD (in)	Grade	Wt. (ppf)	TopMD (ft)	BtmMD (ft)
SING JOINT(S)	16.000	H-40	65.00	9.0	193.0

INTERMEDIATE CASING Report Date: 3/27/1953 00:00

n	OD (in)	Grade	Wt. (ppf)	TopMD (ft)	BtmMD (ft)
SING JOINT(S)	10.750	J-55	45.50	9.0	66.0
SING JOINT(S)	10.750	J-55	40.50	66.0	2,126.0
SING JOINT(S)	10.750	J-55	45.50	2,126.0	3,340.0

PRODUCTION CASING Report Date: 4/24/1953 00:00

n	OD (in)	Grade	Wt. (ppf)	TopMD (ft)	BtmMD (ft)
SING JOINT(S)	7.000	N-80	26.00	9.0	77.0
SING JOINT(S)	7.000	N-80	23.00	77.0	5,795.0
SING JOINT(S)	7.000	N-80	26.00	5,795.0	7,184.0

LINER Report Date: 9/7/1978 00:00

n	OD (in)	Grade	Wt. (ppf)	TopMD (ft)	BtmMD (ft)
ER HANGER	6.276	K-55	20.00	6,796.0	6,799.8
SING JOINT(S)	5.500	K-55	20.00	6,799.8	7,223.4
SING JOINT(S)	5.500	K-55	20.00	7,223.4	7,259.3
SING JOINT(S)	5.500	K-55	20.00	7,259.3	7,906.9
SING JOINT(S)	5.500	K-55	20.00	7,906.9	7,949.0
SING JOINT(S)	5.500	K-55	20.00	7,949.0	7,988.8
OAT SHOE	5.500	K-55	20.00	7,988.8	7,989.8

Well: 314-3G S/T/R: 3G/30S/24E

CASING CEMENT DETAIL
- - -
Sfc Csg. Cmt Vol.: 590 cf (calc from 500 sx type "O")
Hole Size: 22
Top Job: no
Rtns to Sfc: yes
TOC: sfc
- - -

Interm Csg. Cmt Vol.: 805 cf (calc from 700 sx type "C")
Hole Size: 15
Top Job: no
Rtns to Sfc: not reported
TTOC: 1991
- - -

Prod. Csg. Cmt Vol.: 590 sx (calc from 500 sx type "S")
Hole Size: 9.75
Top Job: no
Rtns to Sfc: not reported
TTOC: 4836

Liner Cmt Vol.: 250 cf
Hole Size: 8.5"
Top Job: no
Rtns to Sfc: no
TTOC: 6899'
- - -
Top of Formation:
UBA: 7109'
BLW: 7730'

Volume Behind Pipe:
1.3 Yield Assumed
Theoretical Calculations (TTOC)

Event: WELL ENHANCEMENT
Event End:
Sec. Reason:
End Status:
Well Classification: INJECTION

OCCIDENTAL OF ELK HILLS INC

315-34S

Ground Level: 857.0ft
Datum: ORIGINAL KB @ 871.00ft (default)
API No.: 0402955592

Wellbore: ST1
PBMD: 7,006.0ft
Btm TMD: 7,270.0ft
Spud Date: 2/3/1977 00:00
BH Coord X: 6,145,803.90uss ft
BH Coord Y: 2,288,947.40uss ft

Casing Shoes (ft)	Schematic (1/1/2008)	Openings Top/Btm/Type/Status
55.0		
357.0		
3,430.0		
		6,140.0ft, 6,141.0ft, PERFORATED, SQUEEZE
		6,540.0ft, 6,595.0ft, PERFORATED, SQUEEZE
		6,612.0ft, 6,679.0ft, PERFORATED, SQUEEZE
		6,679.0ft, 6,700.0ft, PERFORATED, SQUEEZE
		6,685.0ft, 6,710.0ft, PERFORATED, SQUEEZE
		6,715.0ft, 6,800.0ft, PERFORATED, SQUEEZE
		6,765.1ft, 6,800.1ft, PERFORATED, SQUEEZE
		6,810.0ft, 6,865.0ft, PERFORATED, SQUEEZE
		6,823.0ft, 6,833.0ft, PERFORATED, SQUEEZE
		6,840.0ft, 6,865.0ft, PERFORATED, SQUEEZE
		6,840.1ft, 6,865.1ft, PERFORATED, OPEN
		6,880.0ft, 6,924.0ft, PERFORATED, OPEN
		6,880.1ft, 6,924.1ft, PERFORATED, OPEN
		6,934.0ft, 7,000.0ft, PERFORATED, OPEN
		6,934.1ft, 7,000.1ft, PERFORATED, OPEN
		7,050.0ft, 7,080.0ft, PERFORATED, ISOLATED
		7,090.0ft, 7,130.0ft, PERFORATED, ISOLATED
7,220.0		

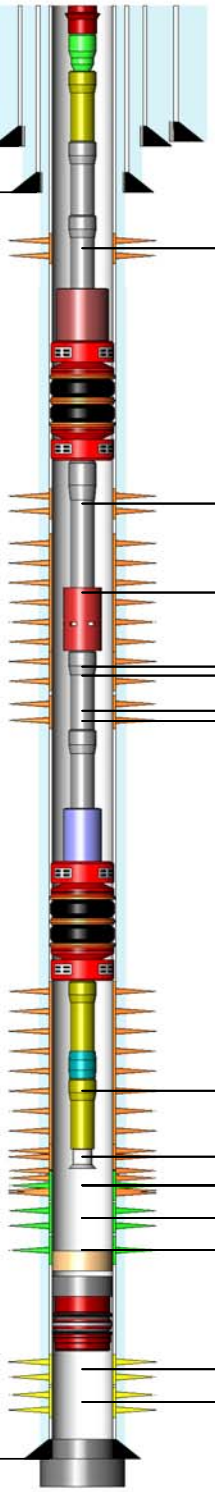

TUBING STRING Report Date: 5/30/2002 00:00

Component	Top MD (ft)	Btm MD (ft)
TH-DBB	14.0	14.6
FATNIP	14.6	15.3
PUPJNT	15.3	31.2
TBGJNT	31.2	6,478.5
ON-OFF	6,478.5	6,479.9
PKR-S	6,479.9	6,485.3
TBGJNT	6,485.3	6,673.5
SS-C	6,673.5	6,677.8
TBGJNT	6,677.8	6,803.2
NOGO-O	6,803.2	6,803.6
PKR-S	6,803.6	6,810.0
PUPJNT	6,810.0	6,816.0
PNIP-O	6,816.0	6,817.3
PUPJNT	6,817.3	6,823.4
BELCOL	6,823.4	6,823.8

PLUG BACK Report Date: 9/8/2003 00:00

Component	Top MD (ft)	Btm MD (ft)
FILL	6,988.0	7,006.0

PLUG BACK Report Date: 11/24/1978 00:00

Component	Top MD (ft)	Btm MD (ft)
CEMENT	7,028.0	7,030.0

PLUG BACK Report Date: 11/24/1978 00:00

Component	Top MD (ft)	Btm MD (ft)
BRP	7,030.0	7,033.0

PLUG BACK Report Date: 7/18/1977 00:00

Component	Top MD (ft)	Btm MD (ft)
CEMENT	7,170.0	7,220.0

PLUG BACK Report Date: 7/17/1977 00:00

Component	Top MD (ft)	Btm MD (ft)
CEMENT	7,220.0	7,270.0

CONDUCTOR CASING Report Date: 2/3/1977 00:00

Item	OD (in)	Grade	Wt. (ppf)	TopMD (ft)	BtmMD (ft)
CASING JOINT(S)	20.000			14.0	55.0

SURFACE CASING Report Date: 6/25/1977 00:00

Item	OD (in)	Grade	Wt. (ppf)	TopMD (ft)	BtmMD (ft)
CASING JOINT(S)	13.375	K-55	54.50	14.0	357.0

INTERMEDIATE CASING Report Date: 7/1/1977 00:00

Item	OD (in)	Grade	Wt. (ppf)	TopMD (ft)	BtmMD (ft)
CASING JOINT(S)	9.625	K-55	40.50	14.0	3,430.0

PRODUCTION CASING Report Date: 7/17/1977 00:00

Item	OD (in)	Grade	Wt. (ppf)	TopMD (ft)	BtmMD (ft)
CASING JOINT(S)	7.000	K-55	26.00	14.0	90.0
CASING JOINT(S)	7.000	K-55	23.00	90.0	5,091.0
CASING JOINT(S)	7.000	K-55	26.00	5,091.0	6,203.7
FLAG JOINT	7.000	K-55	26.00	6,203.7	6,223.0
CASING JOINT(S)	7.000	K-55	26.00	6,223.0	7,220.0

Well: 315-34S S/T/R: 34S/30S/24E

CASING CEMENT DETAIL
- - -
Sfc Csg. Cmt Vol.: 400 cf
Hole Size: 17.5"
Top Job: no
Rtns to Sfc: 10 cf
TOC: sfc
- - -

Interm Csg. Cmt Vol.: 1718 cf
Hole Size: 12.25"
Top Job: no
Rtns to Sfc: 160 cf
TOC: sfc
- - -

Prod. Csg. Cmt Vol.: 1800 cf
Hole Size: 8.75"
Top Job: no
Rtns to Sfc: no
TTOC: sfc
- - -

Liner Cmt Vol.:
Hole Size:
Top Job:
Rtns to Sfc :
TTOC:
- - -
Top of Formation:
UBA: 6830'
BLW: 7202'

Volume Behind Pipe:
1.3 Yield Assumed
Theoretical Calculations (TTOC)

OCCIDENTAL OF ELK HILLS INC

315-35S

Event: NOI - WORKOVER
Event End:
Sec. Reason:
End Status:
Well Classification: DEVELOPMENT

Ground Level: 788.0ft
Datum: ORIGINAL KB @ 802.00ft (default)
API No.: 0402981123

Wellbore: ORIGINAL HOLE
PBMD: 3,255.0ft
Btm TMD: 5,167.0ft
Spud Date: 9/16/1987 00:00
BH Coord X: 6,151,092.45uss ft
BH Coord Y: 2,289,148.40uss ft

Casing Shoes (ft)	Schematic (2/1/2008)	Openings Top/Btm/Type/Status

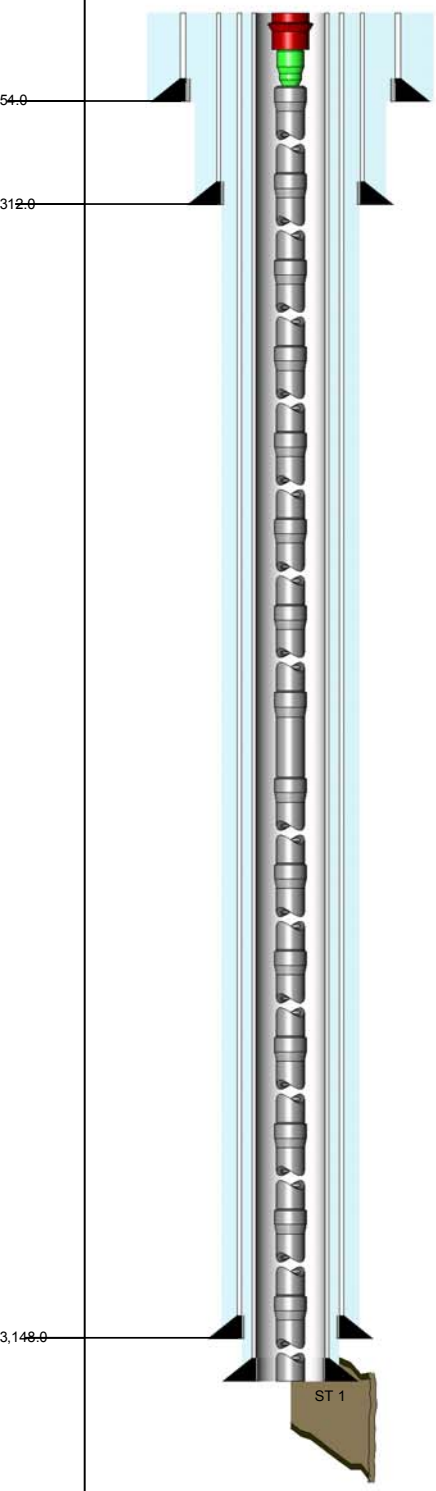

TUBING STRING Report Date: 10/17/2006 00:00

Component	Top MD (ft)	Btm MD (ft)
TH-DBB	14.0	14.6
FATNIP	14.6	15.3
CAS	15.3	6,780.4
TBGCOL	6,780.4	6,780.8

CONDUCTOR CASING Report Date: 9/16/1987 00:00

em	OD (in)	Grade	Wt. (ppf)	TopMD (ft)	BtmMD (ft)
ASING JOINT(S)	20.000	K-55	94.00	14.0	54.0

SURFACE CASING Report Date: 9/20/1987 00:00

em	OD (in)	Grade	Wt. (ppf)	TopMD (ft)	BtmMD (ft)
ASING JOINT(S)	13.375	H-40	48.00	14.0	312.0

INTERMEDIATE CASING Report Date: 9/27/1987 00:00

em	OD (in)	Grade	Wt. (ppf)	TopMD (ft)	BtmMD (ft)
ASING JOINT(S)	9.625	K-55	40.00	14.0	3,148.0

PRODUCTION CASING Report Date: 10/29/1987 00:00

em	OD (in)	Grade	Wt. (ppf)	TopMD (ft)	BtmMD (ft)
ASING JOINT(S)	7.000	N-80	26.00	14.0	87.0
ASING JOINT(S)	7.000	K-55	23.00	87.0	5,078.4
ASING JOINT(S)	7.000	N-80	26.00	5,078.4	6,477.8
LAG JOINT	7.000	N-80	26.00	6,477.8	6,501.5
ASING JOINT(S)	7.000	N-80	26.00	6,501.5	7,387.9
LOAT COLLAR	7.000	N-80	26.00	7,387.9	7,389.9
ASING JOINT(S)	7.000	N-80	26.00	7,389.9	7,478.0
LOAT SHOE	7.000	N-80	26.00	7,478.0	7,480.0

Well: 315-35S S/T/R: 35S/30S/24E

CASING CEMENT DETAIL
- - -
Sfc Csg. Cmt Vol.: 400 cf
Hole Size: 17.5"
Top Job: No
Rtns to Sfc: 70 cf
TOC: sfc
- - -

Interm Csg. Cmt Vol.: 1500 cf
Hole Size: 12.25"
Top Job: No
Rtns to Sfc: 60 cf
TOC: sfc
- - -

Prod. Csg. Cmt Vol.: 1950
Hole Size: 8.75
Top Job: No
Rtns to Sfc: 5 cf
TOC: Sfc
- - -

Liner Cmt Vol.:
Hole Size:
Top Job:
Rtns to Sfc:
TOC:
- - -
Top of Formation:
UBA 6810 ft MD
BLW 7300 ft MD

Volume Behind Pipe:
1.3 Yield Assumed
Theoretical Calculations (TTOC)

OCCIDENTAL OF ELK HILLS INC

315-35S

Event: NOI - WORKOVER
Event End:
Sec. Reason:
End Status:
Well Classification: DEVELOPMENT

Ground Level: 788.0ft
Datum: ORIGINAL KB @ 802.00ft (default)
API No.: 0402981123

Wellbore: ST 1
PBMD: 7,393.0ft
Btm TMD: 7,500.0ft
Spud Date: 9/16/1987 00:00
BH Coord X: 6,151,095.10uss ft
BH Coord Y: 2,289,300.96uss ft

Casing Shoes (ft)	Schematic (2/1/2008)	Openings Top/Btm/Type/Status

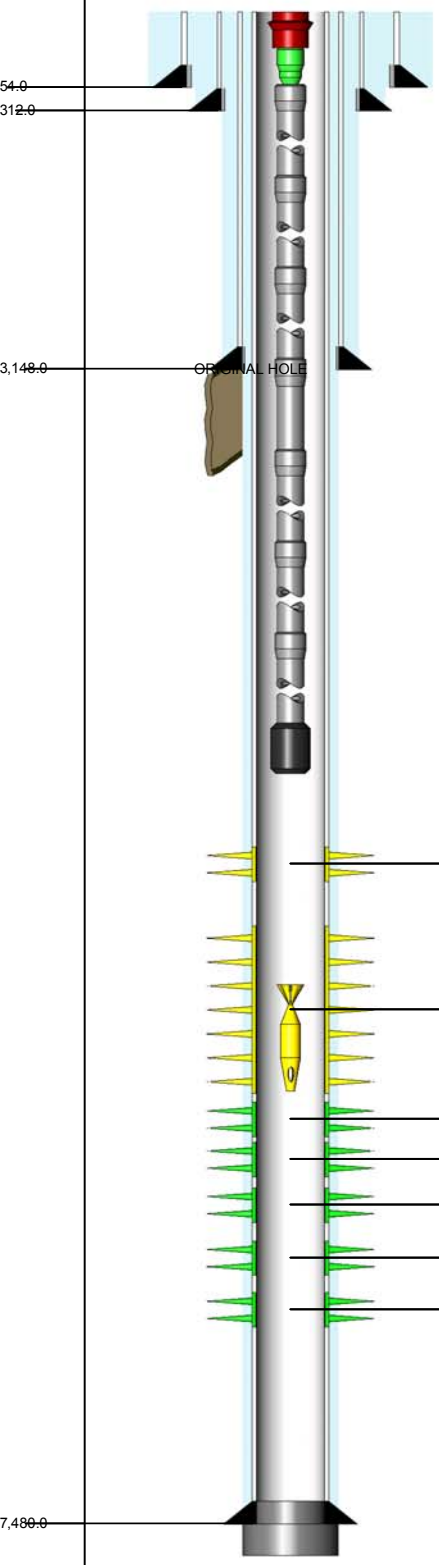

6,844.0ft, 6,910.0ft, PERFORATED, ISOLATED

6,920.0ft, 6,946.0ft, PERFORATED, ISOLATED

6,970.0ft, 7,020.0ft, PERFORATED, OPEN

7,034.0ft, 7,080.0ft, PERFORATED, OPEN

7,104.0ft, 7,153.0ft, PERFORATED, OPEN

7,186.0ft, 7,217.0ft, PERFORATED, OPEN

7,243.0ft, 7,295.0ft, PERFORATED, OPEN

TUBING STRING Report Date: 10/17/2006 00:00

Component	Top MD (ft)	Btm MD (ft)
TH-DBB	14.0	14.6
FATNIP	14.6	15.3
CAS	15.3	6,780.4
TBGCOL	6,780.4	6,780.8

PACKER ASSEMBLY (RETRIEVABLE) Report Date: 10/16/2006 00:00

Component	Top MD (ft)	Btm MD (ft)
FISH	6,933.0	6,939.1

PLUG BACK Report Date: 11/22/1987 00:00

Component	Top MD (ft)	Btm MD (ft)
CEMENT	7,433.0	7,480.0

PLUG BACK Report Date: 10/29/1987 00:00

Component	Top MD (ft)	Btm MD (ft)
CEMENT	7,480.0	7,500.0

CONDUCTOR CASING Report Date: 9/16/1987 00:00

em	OD (in)	Grade	Wt. (ppf)	TopMD (ft)	BtmMD (ft)
ASING JOINT(S)	20.000	K-55	94.00	14.0	54.0

SURFACE CASING Report Date: 9/20/1987 00:00

em	OD (in)	Grade	Wt. (ppf)	TopMD (ft)	BtmMD (ft)
ASING JOINT(S)	13.375	H-40	48.00	14.0	312.0

INTERMEDIATE CASING Report Date: 9/27/1987 00:00

em	OD (in)	Grade	Wt. (ppf)	TopMD (ft)	BtmMD (ft)
ASING JOINT(S)	9.625	K-55	40.00	14.0	3,148.0

PRODUCTION CASING Report Date: 10/29/1987 00:00

em	OD (in)	Grade	Wt. (ppf)	TopMD (ft)	BtmMD (ft)
ASING JOINT(S)	7.000	N-80	26.00	14.0	87.0
ASING JOINT(S)	7.000	K-55	23.00	87.0	5,078.4
ASING JOINT(S)	7.000	N-80	26.00	5,078.4	6,477.8
LAG JOINT	7.000	N-80	26.00	6,477.8	6,501.5
ASING JOINT(S)	7.000	N-80	26.00	6,501.5	7,387.9
LOAT COLLAR	7.000	N-80	26.00	7,387.9	7,389.9
ASING JOINT(S)	7.000	N-80	26.00	7,389.9	7,478.0
LOAT SHOE	7.000	N-80	26.00	7,478.0	7,480.0

Well: 315-35S -RD1 S/T/R: 35S/30S/24E

CASING CEMENT DETAIL
- - -
Sfc Csg. Cmt Vol.: 400 cf
Hole Size: 17.5"
Top Job: No
Rtns to Sfc: 70 cf
TOC: sfc
- - -

Interm Csg. Cmt Vol.: 1500 cf
Hole Size: 12.25"
Top Job: No
Rtns to Sfc: 60 cf
TOC: sfc
- - -

Prod. Csg. Cmt Vol.: 1950
Hole Size: 8.75
Top Job: No
Rtns to Sfc: 5 cf
TOC: Sfc
- - -

Liner Cmt Vol.:
Hole Size:
Top Job:
Rtns to Sfc:
TOC:
- - -
Top of Formation:
UBA 6810 ft MD
BLW 7300 ft MD

Volume Behind Pipe:
1.3 Yield Assumed
Theoretical Calculations (TTOC)

OCCIDENTAL OF ELK HILLS INC

315-3G

Event: WELL MAINT - RIGLESS
Event End:
Sec. Reason:

Ground Level: 978.0ft
Datum: ORIGINAL KB @ 992.00ft (default)
API No.: 0402964713

Wellbore: ORIGINAL HOLE
PBMD: 7,392.0ft
Btm TMD: 8,221.0ft
Spud Date: 6/9/1981 00:00
BH Coord X: 6,145,720.72uss ft
BH Coord Y: 2,283,959.92uss ft

Casing Shoes (ft) | Schematic (8/4/2009) | Openings Top/Btm/Type/Status

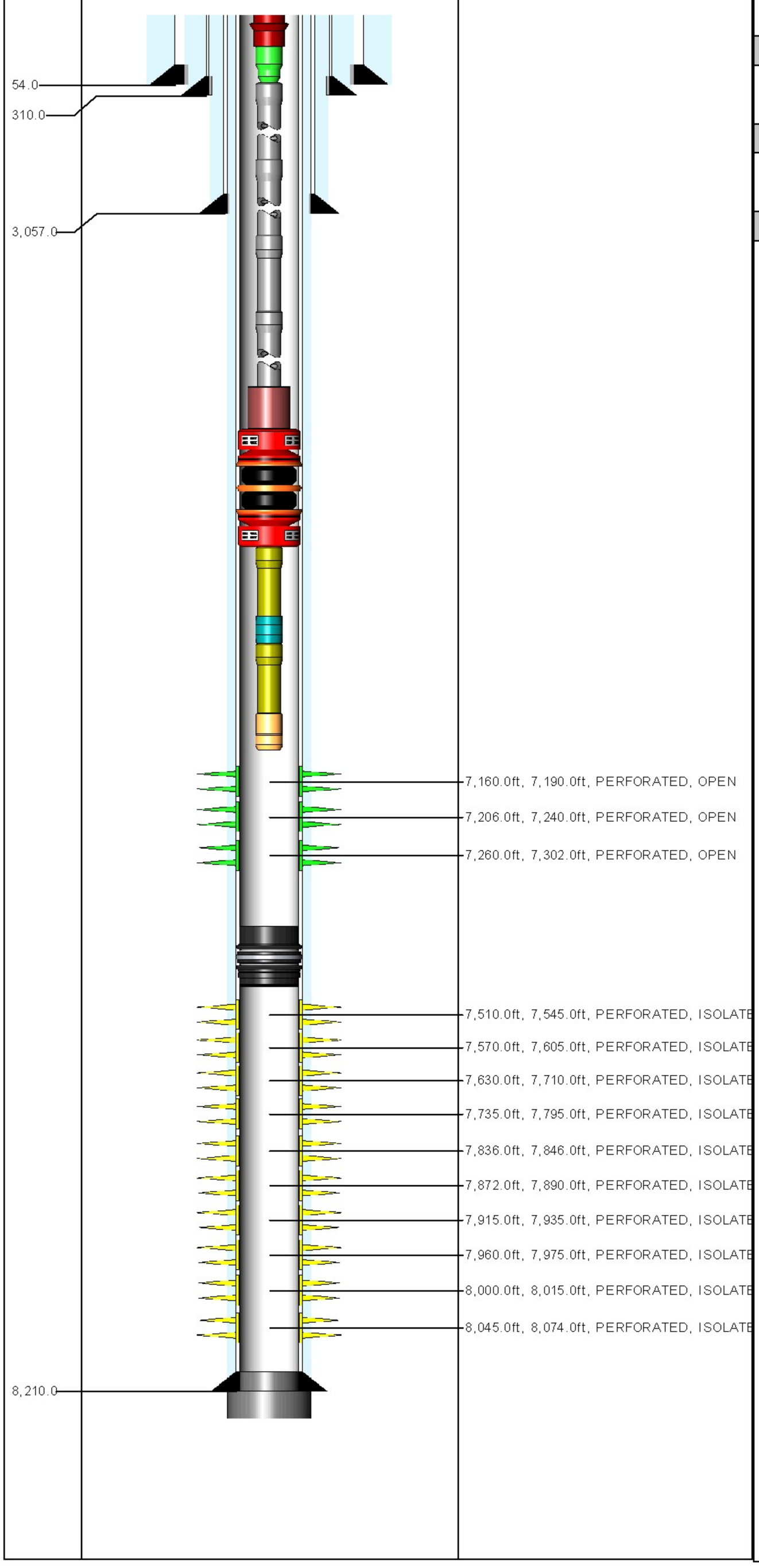

TUBING STRING Report Date: 7/1/2008 00:00

Component	Top MD (ft)	Btm MD (ft)
TH-DBB	14.0	14.6
FATNIP	14.6	15.3
CAS	15.3	7,082.1
ON-OFF	7,082.1	7,083.8
PKR	7,083.8	7,088.2
PUPJNT	7,088.2	7,098.5
PRONIP	7,098.5	7,099.6
PUPJNT	7,099.6	7,105.7
WLREG	7,105.7	7,106.2

PLUG BACK Report Date: 6/24/2008 00:00

Component	Top MD (ft)	Btm MD (ft)
BP-RET	7,392.0	7,394.5

PLUG BACK Report Date: 12/19/1981 00:00

Component	Top MD (ft)	Btm MD (ft)
CEMENT	8,163.0	8,210.0

PLUG BACK Report Date: 7/12/1981 00:00

Component	Top MD (ft)	Btm MD (ft)
CEMENT	8,210.0	8,221.0

CONDUCTOR CASING Report Date: 6/9/1981 00:00

Item	OD (in)	Grade	Wt. (ppf)	TopMD (ft)	BtmMD (ft)
CASING JOINT(S)	20.000			14.0	54.0

SURFACE CASING Report Date: 6/11/1981 00:00

Item	OD (in)	Grade	Wt. (ppf)	TopMD (ft)	BtmMD (ft)
CASING JOINT(S)	13.375	H-40	48.00	14.0	310.0

INTERMEDIATE CASING Report Date: 6/16/1981 00:00

Item	OD (in)	Grade	Wt. (ppf)	TopMD (ft)	BtmMD (ft)
CASING JOINT(S)	9.625	K-55	40.00	14.0	3,057.0

PRODUCTION CASING Report Date: 7/12/1981 00:00

Item	OD (in)	Grade	Wt. (ppf)	TopMD (ft)	BtmMD (ft)
CASING JOINT(S)	7.000	N-80	29.00	14.0	69.3
CASING JOINT(S)	7.000	K-55	23.00	69.3	4,938.0
CASING JOINT(S)	7.000	K-55	26.00	4,938.0	7,055.8
FLAG JOINT	7.000	N-80	29.00	7,055.8	7,096.6
CASING JOINT(S)	7.000	N-80	29.00	7,096.6	8,163.5
FLOAT COLLAR	7.000	N-80	29.00	8,163.5	8,165.5
CASING JOINT(S)	7.000	N-80	29.00	8,165.5	8,207.5
FLOAT SHOE	7.000	N-80	29.00	8,207.5	8,210.0

Well: 315-3G S/T/R: 3G/30S/24E

CASING CEMENT DETAIL
- - -
Sfc Csg. Cmt Vol.: 650 cf
Hole Size: 17.5
Top Job: no
Rtns to Sfc: 85 cf
TOC: sfc
- - -

Interm Csg. Cmt Vol.: 1705 cf
Hole Size: 12.25
Top Job: no
Rtns to Sfc: 89 cf
TOC: sfc
- - -

Prod. Csg. Cmt Vol.: 2150 cf
Hole Size: 8.75
Top Job: no
Rtns to Sfc: not reported
TTOC: sfc

Liner Cmt Vol.:
Hole Size:
Top Job:
Rtns to Sfc:
TOC:
- - -
Top of Formation:
UBA: 7473'
BLW: 8110'

Volume Behind Pipe:
1.3 Yield Assumed
Theoretical Calculations (TTOC)

Wellbore: ST1

Event: WELL MAINT - RIG
Event End: 2/3/2009 00:00
Sec. Reason:
End Status: FINISHED - SUCCESS
Well Classification: DEVELOPMENT

OCCIDENTAL OF ELK HILLS INC

315A-34S

Ground Level: 856.0ft
Datum: ORIGINAL KB @ 869.00ft (default)
API No.: 0402967315

PBMD: 6,800.0ft
Btm TMD: 7,550.0ft
Spud Date: 8/9/1982 00:00
BH Coord X: 6,145,836.80uss ft
BH Coord Y: 2,288,290.86uss ft

Casing Shoes (ft)	Schematic (3/1/2009)	Openings Top/Btm/Type/Status

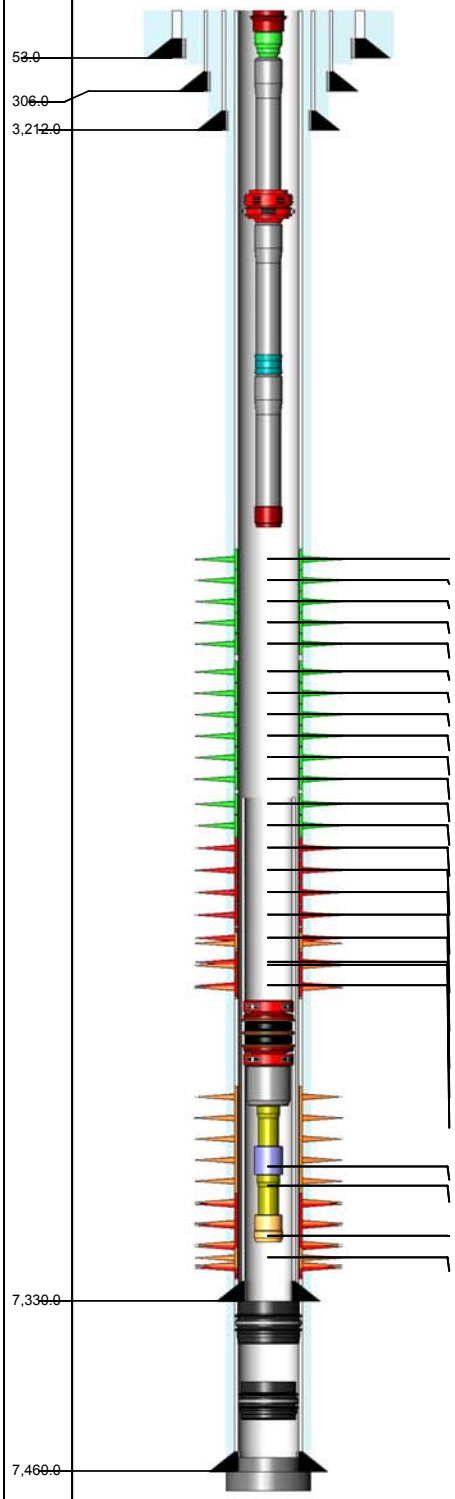

6,274.0ft, 6,286.0ft, PERFORATED, OPEN
6,286.0ft, 6,306.0ft, PERFORATED, OPEN
6,310.0ft, 6,315.0ft, PERFORATED, OPEN
6,318.0ft, 6,325.0ft, PERFORATED, OPEN
6,330.0ft, 6,336.0ft, PERFORATED, OPEN
6,541.0ft, 6,548.0ft, PERFORATED, OPEN
6,561.0ft, 6,566.0ft, PERFORATED, OPEN
6,575.0ft, 6,580.0ft, PERFORATED, OPEN
6,588.0ft, 6,594.0ft, PERFORATED, OPEN
6,610.0ft, 6,616.0ft, PERFORATED, OPEN
6,630.0ft, 6,640.0ft, PERFORATED, OPEN
6,752.0ft, 6,758.0ft, PERFORATED, OPEN
6,770.0ft, 6,780.0ft, PERFORATED, OPEN
6,820.0ft, 6,890.0ft, PERFORATED, ABANDON
6,915.0ft, 6,945.0ft, PERFORATED, ABANDON
6,970.0ft, 7,020.0ft, PERFORATED, ABANDON
7,045.0ft, 7,075.0ft, PERFORATED, ABANDON
7,103.0ft, 7,152.0ft, PERFORATED, ABANDON
7,182.0ft, 7,202.0ft, PERFORATED, ABANDON
7,114.0ft, 7,238.0ft, PERFORATED, SQUEEZE
7,216.0ft, 7,233.0ft, PERFORATED, ABANDON
7,249.0ft, 7,270.0ft, PERFORATED, SQUEEZE
7,250.0ft, 7,300.0ft, PERFORATED, SQUEEZE
7,258.0ft, 7,303.0ft, PERFORATED, ABANDON
7,270.0ft, 7,291.0ft, PERFORATED, SQUEEZE

ROD STRING Report Date: 10/30/2008 00:00

Component	Top MD (ft)	Btm MD (ft)
POLROD	0.0	36.0
PNYROD	36.0	52.0
R-4PER	52.0	2,032.0
ROD	2,032.0	3,982.0
R-4PER	3,982.0	5,962.0
RSTBAR	5,962.0	5,966.0
INSPMP	5,966.0	5,990.0

TUBING STRING Report Date: 10/29/2008 00:00

Component	Top MD (ft)	Btm MD (ft)
TH-DBB	13.0	13.7
FATNIP	13.7	14.4
TBGJNT	14.4	5,812.0
AC	5,812.0	5,814.3
TBGJNT	5,814.3	5,969.6
STNIP	5,969.6	5,970.7
TBGJNT	5,970.7	6,002.2
STCOLL	6,002.2	6,002.6

PACKER ASSEMBLY (PERMANENT) Report Date: 11/2/2000 00:00

Component	Top MD (ft)	Btm MD (ft)
PKR-S	7,241.0	7,246.9
PBR	7,246.9	7,251.0
PUPJNT	7,251.0	7,255.0
NOGO-O	7,255.0	7,256.1
PUPJNT	7,256.1	7,260.1
WLREG	7,260.1	7,260.7

PLUG BACK Report Date: 10/9/2000 00:00

Component	Top MD (ft)	Btm MD (ft)
BP-DR	7,330.0	7,332.6

PLUG BACK Report Date: 10/24/1994 00:00

Component	Top MD (ft)	Btm MD (ft)
BP-DR	7,410.0	7,412.0

PLUG BACK Report Date: 10/26/1982 00:00

Component	Top MD (ft)	Btm MD (ft)
CEMENT	7,416.0	7,460.0

PLUG BACK Report Date: 9/8/1982 00:00

Component	Top MD (ft)	Btm MD (ft)
CEMENT	7,460.0	7,550.0

CONDUCTOR CASING Report Date: 8/9/1982 00:00

Item	OD (in)	Grade	Wt. (ppf)	TopMD (ft)	BtmMD (ft)
CASING JOINT(S)	20.000			13.0	53.0

SURFACE CASING Report Date: 8/11/1982 00:00

Item	OD (in)	Grade	Wt. (ppf)	TopMD (ft)	BtmMD (ft)
CASING JOINT(S)	13.375	H-40	48.00	13.0	306.0

INTERMEDIATE CASING Report Date: 8/15/1982 00:00

Item	OD (in)	Grade	Wt. (ppf)	TopMD (ft)	BtmMD (ft)
CASING JOINT(S)	9.625	K-55	40.00	13.0	3,212.0

PRODUCTION CASING Report Date: 9/8/1982 00:00

Item	OD (in)	Grade	Wt. (ppf)	TopMD (ft)	BtmMD (ft)
CASING JOINT(S)	7.000	K-55	26.00	13.0	73.6
CASING JOINT(S)	7.000	K-55	23.00	73.6	4,803.9
CASING JOINT(S)	7.000	K-55	26.00	4,803.9	6,154.8
PACKOFF JNT	7.000	K-55	26.00	6,154.8	6,169.1
CASING JOINT(S)	7.000	K-55	26.00	6,169.1	7,416.6
FLOAT COLLAR	7.000	K-55	26.00	7,416.6	7,418.5
CASING JOINT(S)	7.000	K-55	26.00	7,418.5	7,458.1
FLOAT SHOE	7.000	K-55	26.00	7,458.1	7,460.0

INNER LINER Report Date: 10/10/2000 00:00

Item	OD (in)	Grade	Wt. (ppf)	TopMD (ft)	BtmMD (ft)
CASING PATCH	5.500	L-80	17.00	6,753.1	7,330.0

Well: 315A-34S S/T/R: 34S/30S/24E

CASING CEMENT DETAIL
- - -
Sfc Csg. Cmt Vol.: 550 cf
Hole Size: 17.5"
Top Job: no
Rtns to Sfc: 62 cf
TOC: sfc
- - -

Interm Csg. Cmt Vol.: 1660 cf
Hole Size: 12.25"
Top Job: no
Rtns to Sfc: 70 cf
TOC: sfc
- - -

Prod. Csg. Cmt Vol.: 1870 cf
Hole Size: 8.75"
Top Job: no
Rtns to Sfc: no
TTOC: sfc
- - -

Liner Cmt Vol.:
Hole Size:
Top Job:
Rtns to Sfc :
TTOC:
- - -
Top of Formation:
UBA: 6818'
BLW: 7330'

Volume Behind Pipe:
1.3 Yield Assumed
Theoretical Calculations (TTOC)

Event: WELL MAINT - RIG
Event End: 1/23/2009 00:00
Sec. Reason: LOW PRODUCTION
End Status: FINISHED - SUCCESS
Well Classification: DEVELOPMENT

OCCIDENTAL OF ELK HILLS INC

315X-35S

Ground Level: 729.5ft
Datum: ORIGINAL KB @ 749.50ft (default)
API No.: 0403018974

Wellbore: ORIGINAL HOLE
PBMD: 7,334.0ft
Btm TMD: 7,447.0ft
Spud Date: 9/2/2001 00:00
BH Coord X: 6,151,507.14uss ft
BH Coord Y: 2,289,231.47uss ft

Casing Shoes (ft)	Schematic (2/1/2009)	Openings Top/Btm/Type/Status

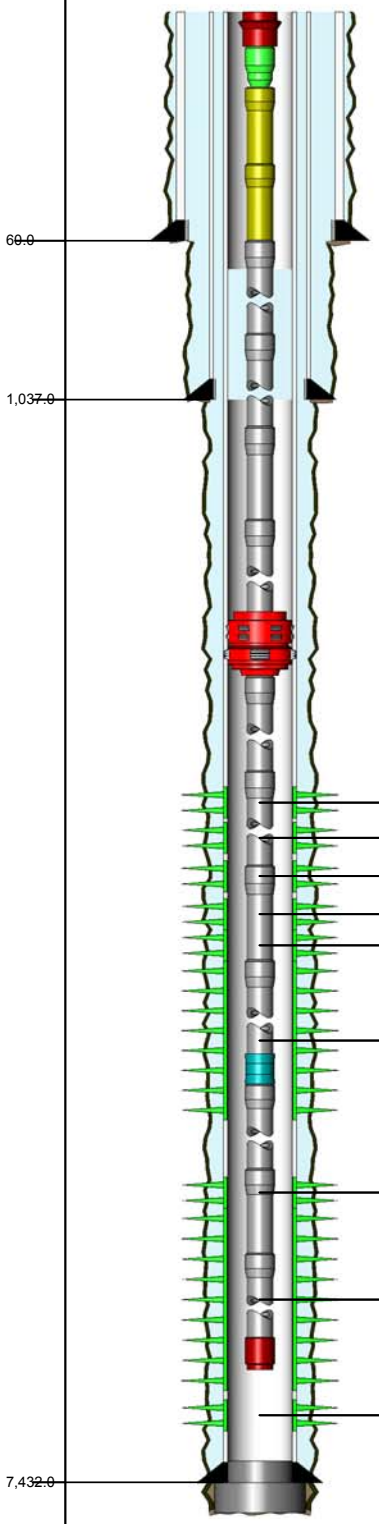

7,070.0ft, 7,105.0ft, PERFORATED, OPEN
7,110.0ft, 7,118.0ft, PERFORATED, OPEN
7,126.0ft, 7,153.0ft, PERFORATED, OPEN
7,159.0ft, 7,195.0ft, PERFORATED, OPEN
7,195.0ft, 7,205.0ft, PERFORATED, OPEN
7,205.0ft, 7,247.0ft, PERFORATED, OPEN
7,255.0ft, 7,265.0ft, PERFORATED, OPEN
7,265.0ft, 7,295.0ft, PERFORATED, OPEN
7,304.0ft, 7,316.0ft, PERFORATED, OPEN

ROD STRING Report Date: 1/16/2009 00:00

Component	Top MD (ft)	Btm MD (ft)
POLRDL	0.0	30.0
PNYROD	30.0	32.0
PNYROD	32.0	36.0
PNYROD	36.0	40.0
R-4PER	40.0	3,190.0
ROD	3,190.0	5,560.0
R-4PER	5,560.0	6,130.0
ROD	6,130.0	7,210.0
RSTBAR	7,210.0	7,214.0
INSPMP	7,214.0	7,238.0

TUBING STRING Report Date: 1/19/2009 00:00

Component	Top MD (ft)	Btm MD (ft)
TH-DBB	20.0	20.6
FATNIP	20.6	21.2
PUPJNT	21.2	31.3
PUPJNT	31.3	41.4
CAS	41.4	6,896.1
AC	6,896.1	6,898.4
CAS	6,898.4	7,240.8
STNIP	7,240.8	7,241.9
CAS	7,241.9	7,273.1
STCOLL	7,273.1	7,273.5

PLUG BACK Report Date: 10/5/2001 00:00

Component	Top MD (ft)	Btm MD (ft)
CEMENT	7,334.0	7,432.0

PLUG BACK Report Date: 9/20/2001 00:00

Component	Top MD (ft)	Btm MD (ft)
CEMENT	7,432.0	7,447.0

CONDUCTOR CASING Report Date: 8/21/2001 00:00

Item	OD (in)	Grade	Wt. (ppf)	TopMD (ft)	BtmMD (ft)
CASING JOINT(S)	16.000			20.0	60.0

SURFACE CASING Report Date: 9/2/2001 00:00

Item	OD (in)	Grade	Wt. (ppf)	TopMD (ft)	BtmMD (ft)
CASING JOINT(S)	9.625	K-55	36.00	20.0	990.1
	9.625			990.1	990.1
CASING JOINT(S)	9.625	K-55	36.00	990.1	1,035.8
GUIDE SHOE	9.625			1,035.8	1,037.0

PRODUCTION CASING Report Date: 9/20/2001 00:00

Item	OD (in)	Grade	Wt. (ppf)	TopMD (ft)	BtmMD (ft)
CASING JOINT(S)	7.000	N-80	29.00	20.0	6,462.9
FLAG JOINT	7.000	N-80	29.00	6,462.9	6,482.9
CASING JOINT(S)	7.000	N-80	29.00	6,482.9	7,242.9
CASING JOINT(S)	7.000	N-80	29.00	7,242.9	7,337.3
FLOAT COLLAR	7.000	N-80	29.00	7,337.3	7,339.0
CASING JOINT(S)	7.000	N-80	29.00	7,339.0	7,430.5
FLOAT SHOE	7.000	N-80	29.00	7,430.5	7,432.0

Well: 315X-35S S/T/R: 35S/30S/24E

CASING CEMENT DETAIL
- - -
Sfc Csg. Cmt Vol.: 670 cf
Hole Size: 12.25"
Top Job: no
Rtns to Sfc: 5 bbls
TOC: sfc
- - -

Interm Csg. Cmt Vol.:
Hole Size:
Top Job:
Rtns to Sfc:
TOC:
- - -

Prod. Csg. Cmt Vol.: 1449 cf
Hole Size: 8.75"
Top Job: no
Rtns to Sfc: no
TTOC: sfc
- - -

Liner Cmt Vol.:
Hole Size:
Top Job:
Rtns to Sfc:
TTOC:
- - -
Top of Formation:
UBA: 6825'
BLW: 7318'

Volume Behind Pipe:
1.3 Yield Assumed
Theoretical Calculations (TTOC)

OCCIDENTAL OF ELK HILLS INC

316-26S

Event: WELL MAINT - RIGLESS
Event End: 7/18/2006 00:00
Sec. Reason:
End Status:
Well Classification: DEVELOPMENT

Ground Level: 583.0ft
Datum: ORIGINAL KB @ 599.00ft (default)
API No.: 0402965102

Wellbore: ST1
PBMD: 3,540.0ft
Btm TMD: 11,004.0ft
Spud Date: 7/1/1981 00:00
BH Coord X: 6,151,641.20uss ft
BH Coord Y: 2,292,531.40uss ft

Casing Shoes (ft)

Schematic (7/18/2006)

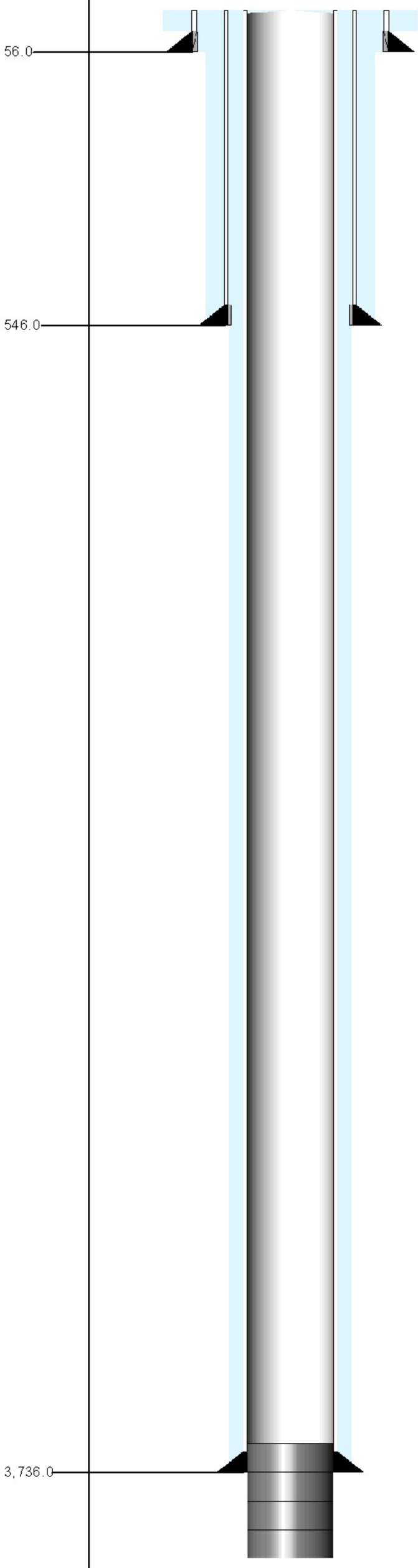

Openings Top/Btm/Type/Status

PLUG BACK Report Date: 9/14/1981 00:00

Component	Top MD (ft)	Btm MD (ft)
CEMENT	3,540.0	3,736.0

PLUG BACK Report Date: 9/14/1981 00:00

Component	Top MD (ft)	Btm MD (ft)
CEMENT	3,736.0	8,635.0

PLUG BACK Report Date: 9/14/1981 00:00

Component	Top MD (ft)	Btm MD (ft)
CEMENT	8,635.0	9,800.0

PLUG BACK Report Date: 9/13/1981 00:00

Component	Top MD (ft)	Btm MD (ft)
CEMENT	9,800.0	11,000.0

CONDUCTOR CASING Report Date: 7/23/1981 00:00

Item	OD (in)	Grade	Wt. (ppf)	TopMD (ft)	BtmMD (ft)
CASING JOINT(S)	20.000			16.0	56.0

SURFACE CASING Report Date: 7/28/1981 00:00

Item	OD (in)	Grade	Wt. (ppf)	TopMD (ft)	BtmMD (ft)
CASING JOINT(S)	13.375	H-40	48.00	16.0	507.0
	13.375	H-40	48.00	507.0	507.0
CASING JOINT(S)	13.375	H-40	48.00	507.0	545.0
GUIDE SHOE	13.375	H-40	48.00	545.0	546.0

INTERMEDIATE CASING Report Date: 8/3/1981 00:00

Item	OD (in)	Grade	Wt. (ppf)	TopMD (ft)	BtmMD (ft)
CASING JOINT(S)	9.625	K-55	40.50	16.0	3,693.0
FLOAT COLLAR	9.625	K-55	40.50	3,693.0	3,693.0
CASING JOINT(S)	9.625	K-55	40.50	3,693.0	3,734.5
FLOAT SHOE	9.625	K-55	40.50	3,734.5	3,736.0

Well: 316-26S S/T/R: 26S/30S/24E

CASING CEMENT DETAIL
- - -
Sfc Csg. Cmt Vol.: 620 cf
Hole Size: 17.5"
Top Job: No
Rtns to Sfc: 90 cf
TTOC: sfc
- - -

Interm Csg. Cmt Vol.: 1830 cf
Hole Size: 12.25"
Top Job: No
Rtns to Sfc: 90 cf
TOC: sfc
- - -

Prod. Csg. Cmt Vol.:
Hole Size:
Top Job: No
Rtns to Sfc:
TOC: Sfc
- - -

Liner Cmt Vol.:
Hole Size:
Top Job:
Rtns to Sfc:
TOC:
- - -
Top of Formation:
UBA: 9044'
BLW: 9708'

Volume Behind Pipe:
1.3 Yield Assumed
Theoretical Calculations (TTOC)

OCCIDENTAL OF ELK HILLS INC

316-35S

Event: WELL MAINT - RIGLESS
Event End:
Sec. Reason:

Ground Elev: 870.0ft
KB to Ground: 9.0ft
Datum: ORIGINAL KB @ 879.00ft (default)
API No.: 0402927770

Wellbore: ORIGINAL HOLE
Top TMD: 9.0ft
PBMD: 6,920.0ft
Btm TMD: 6,925.0ft
Spud Date: 8/16/1951 00:00
BH Coord X: 6,151,088.26uss ftBH Coord Y: 2,288,150.24uss

Casing Shoes (ft) | Schematic (8/4/2009) | Openings Top/Btm/Type/Status

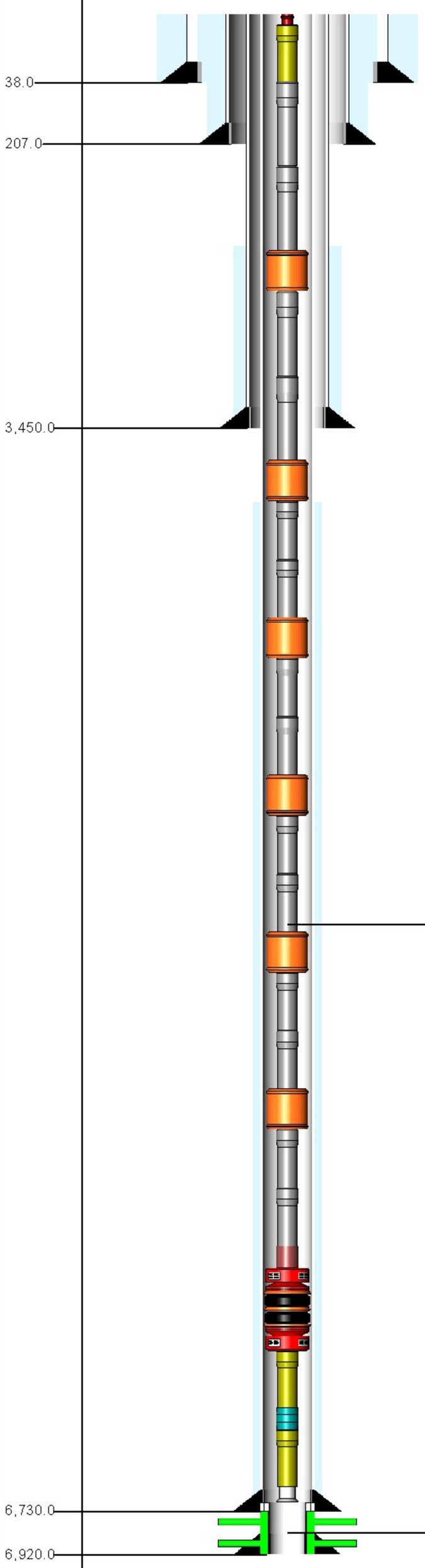

6,119.0ft, 6,120.0ft, WSO PERFS, SQUEEZ

6,730.0ft, 6,919.0ft, SLOTTED, OPEN

TUBING STRING Report Date: 3/26/2005 00:00

Component	Top MD (ft)	Btm MD (ft)
TH-DBB	9.0	9.6
PUPJNT	9.6	11.3
TBGJNT	11.3	2,278.7
GLM-V	2,278.7	2,287.5
TBGJNT	2,287.5	3,892.4
GLM-V	3,892.4	3,901.2
TBGJNT	3,901.2	5,002.3
GLM-V	5,002.3	5,011.2
TBGJNT	5,011.2	5,641.1
GLM-V	5,641.1	5,649.9
TBGJNT	5,649.9	6,153.2
GLM-V	6,153.2	6,162.1
TBGJNT	6,162.1	6,633.9
GLM-V	6,633.9	6,642.8
TBGJNT	6,642.8	6,674.2
ON-OFF	6,674.2	6,676.3
PKR-S	6,676.3	6,680.5
PUPJNT	6,680.5	6,684.5
PRONIP	6,684.5	6,685.9
PUPJNT	6,685.9	6,689.9
BELCOL	6,689.9	6,690.4

CONDUCTOR CASING Report Date: 8/16/1951 00:00

Item Description	Btm MD(ft)
CASING JOINT(S) 26 in,	38.0

SURFACE CASING Report Date: 12/26/1951 00:00

Item Description	Btm MD(ft)
CASING JOINT(S) 16 in, , H-40, 65	206.0
GUIDE SHOE 16 in, , 65	207.0

INTERMEDIATE CASING Report Date: 12/31/1951 00:00

Item Description	Btm MD (ft)
CASING JOINT(S) 10.75 in, , J-55, 45.5	66.0
CASING JOINT(S) 10.75 in, , J-55, 40.5	1,714.0
CASING JOINT(S) 10.75 in, , J-55, 45.5	3,449.0
GUIDE SHOE 10.75 in, , 45.3	3,450.0

PRODUCTION CASING Report Date: 1/15/1952 00:00

Item Description	Btm MD (ft)
CASING JOINT(S) 7 in, , N-80, 23	5,773.0
CASING JOINT(S) 7 in, , N-80, 26	6,670.0
CASING JOINT(S) 7 in, , N-80, 26	6,729.0
GUIDE SHOE 7 in, , N-80, 26	6,730.0

LINER Report Date: 1/21/1952 00:00

Item Description	Btm MD (ft)
LINER HANGER 7 in, , J-55, 20	6,696.6
CASING JOINT(S) 5.5 in, , J-55, 20	6,729.9
SLOTTED LINER 5.5 in, , J-55, 20	6,919.0
GUIDE SHOE 5.5 in, , J-55, 20	6,920.0

WELL: 316-35S S/T/R: 35S/30S/24E

CASING CEMENT DETAIL
- - -
Sfc Csg. Cmt Vol.: 650cf
Hole Size: 22"
Top Job:
Rtns to Sfc: YES
TOC:
- - -
Int. Csg. Cmt Vol.: 1040cf
Hole Size: 15"
Top Job:
Rtns to Sfc: none listed
TOC: tag @ 2180'
- - -
Prod Csg. Cmt Vol.: 1040cf
Hole Size: 8-3/4"
Rtns to Sfc: none listed
TOC: tag @ 3910'
- - -
Liner Cmt Vol.: landed slotted liner
Hole Size: 6-1/8"

Top of Formation:
UBA: 6817'
BLW: N/A

Volume Behind Pipe
1.3 Yield Assumed on
Theoretical Calculations

OCCIDENTAL OF ELK HILLS INC

316X-34S

Event: WELL MAINT - RIGLESS
Event End:
Sec. Reason:

Ground Level: 927.8ft
Datum: ORIGINAL KB @ 947.80ft (default)
API No.: 0403017149

Wellbore: ORIGINAL HOLE
PBMD: 7,349.0ft
Btm TMD: 7,450.0ft
Spud Date: 12/20/2000 00:00
BH Coord X: 6,145,515.32uss ft
BH Coord Y: 2,287,928.30uss ft

Casing Shoes (ft) | Schematic (7/30/2009) | Openings Top/Btm/Type/Status

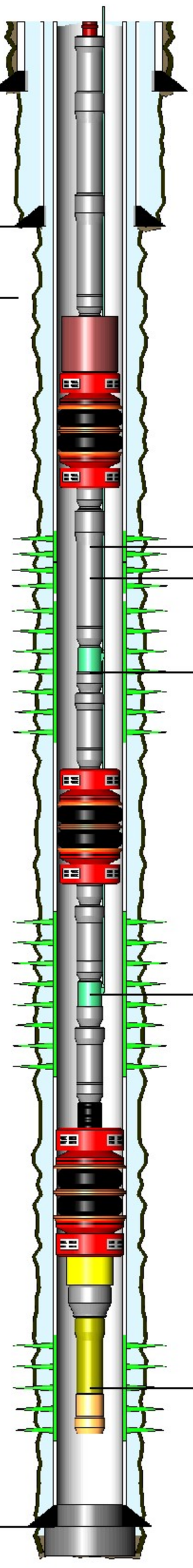

965.0
80.0
7,438.0

6,800.0ft, 6,810.0ft, PERFORATED, OPEN
6,813.0ft, 6,902.0ft, PERFORATED, OPEN
6,913.0ft, 6,990.0ft, PERFORATED, OPEN
7,016.0ft, 7,160.0ft, PERFORATED, OPEN
7,176.0ft, 7,254.0ft, PERFORATED, OPEN

TUBING STRING Report Date: 3/12/2001 00:00

Component	Top MD (ft)	Btm MD (ft)
TH-DBB	20.0	21.0
TBGJNT	21.0	39.2
TBGJNT	39.2	6,694.8
XO	6,694.8	6,695.1
ON-OFF	6,695.1	6,696.7
PKR-S	6,696.7	6,700.7
XO	6,700.7	6,701.5
TBGJNT	6,701.5	6,951.4
XO	6,951.4	6,952.2
INJM-V	6,952.2	6,961.2
XO	6,961.2	6,961.6
TBGJNT	6,961.6	6,993.3
XO	6,993.3	6,994.1
PKR-S	6,994.1	7,001.4
XO	7,001.4	7,002.2
TBGJNT	7,002.2	7,121.3
XO	7,121.3	7,122.1
INJM-V	7,122.1	7,131.7
XO	7,131.7	7,132.0
TBGJNT	7,132.0	7,163.2
XO	7,163.2	7,164.0
SA	7,164.0	7,165.0

PACKER ASSEMBLY (PERMANENT) Report Date: 3/16/2001 00:00

Component	Top MD (ft)	Btm MD (ft)
PKR-S	7,165.0	7,168.9
MOEXT	7,168.9	7,174.5
XO	7,174.5	7,175.5
PUPJNT	7,175.5	7,177.6
WLREG	7,177.6	7,178.1

PLUG BACK Report Date: 1/7/2001 00:00

Component	Top MD (ft)	Btm MD (ft)
CEMENT	7,349.0	7,438.0

PLUG BACK Report Date: 1/6/2001 00:00

Component	Top MD (ft)	Btm MD (ft)
CEMENT	7,438.0	7,450.0

CONDUCTOR CASING Report Date: 12/19/2000 00:00

Item	OD (in)	Grade	Wt. (ppf)	TopMD (ft)	BtmMD (ft)
CASING JOINT(S)	14.000			20.0	60.0

SURFACE CASING Report Date: 12/22/2000 00:00

Item	OD (in)	Grade	Wt. (ppf)	TopMD (ft)	BtmMD (ft)
CASING JOINT(S)	9.625	K-55	36.00	20.0	916.9
	9.625	K-55	36.00	916.9	916.9
CASING JOINT(S)	9.625	K-55	36.00	916.9	963.9
FLOAT SHOE	9.625	K-55	36.00	963.9	965.0

PRODUCTION CASING Report Date: 1/6/2001 00:00

Item	OD (in)	Grade	Wt. (ppf)	TopMD (ft)	BtmMD (ft)
CASING JOINT(S)	7.000	N-80	26.00	20.0	6,655.0
FLAG JOINT	7.000	N-80	26.00	6,655.0	6,677.3
CASING JOINT(S)	7.000	N-80	26.00	6,677.3	7,346.1
FLOAT COLLAR	7.000		26.00	7,346.1	7,348.0
CASING JOINT(S)	7.000	N-80	26.00	7,348.0	7,436.2
FLOAT SHOE	7.000		26.00	7,436.2	7,438.0

Well: 316X-34S S/T/R: 34S/30S/24E

CASING CEMENT DETAIL
- - -
Sfc Csg. Cmt Vol.: 532 cf
Hole Size: 12.25"
Top Job: No
Rtns to Sfc: 79 cf
TOC: Sfc
- - -

Interm Csg. Cmt Vol.:
Hole Size:
Top Job:
Rtns to Sfc:
TOC:
- - -

Prod. Csg. Cmt Vol.: 1718 cf
Hole Size: 8.75"
Top Job: No
Rtns to Sfc: 128 cf
TOC: Sfc

Liner Cmt Vol.:
Hole Size:
Top Job:
Rtns to Sfc:
TTOC:
- - -
Top of Formation:
UBA: 6797'
BLW: 7344'

Volume Behind Pipe:
1.3 Yield Assumed
Theoretical Calculations (TTOC)

Event: NOI - WORKOVER
Event End:
Sec. Reason:
End Status:
Well Classification: DEVELOPMENT

OCCIDENTAL OF ELK HILLS INC

316X-35S

Ground Level: 789.8ft
Datum: ORIGINAL KB @ 810.80ft (default)
API No.: 0403018385

Wellbore: ST1
PBMD: 7,326.0ft
Btm TMD: 7,444.0ft
Spud Date: 6/1/2001 00:00
BH Coord X: 6,151,369.49uss ft
BH Coord Y: 2,288,693.05uss ft

Casing Shoes (ft)	Schematic (7/1/2008)	Openings Top/Btm/Type/Status

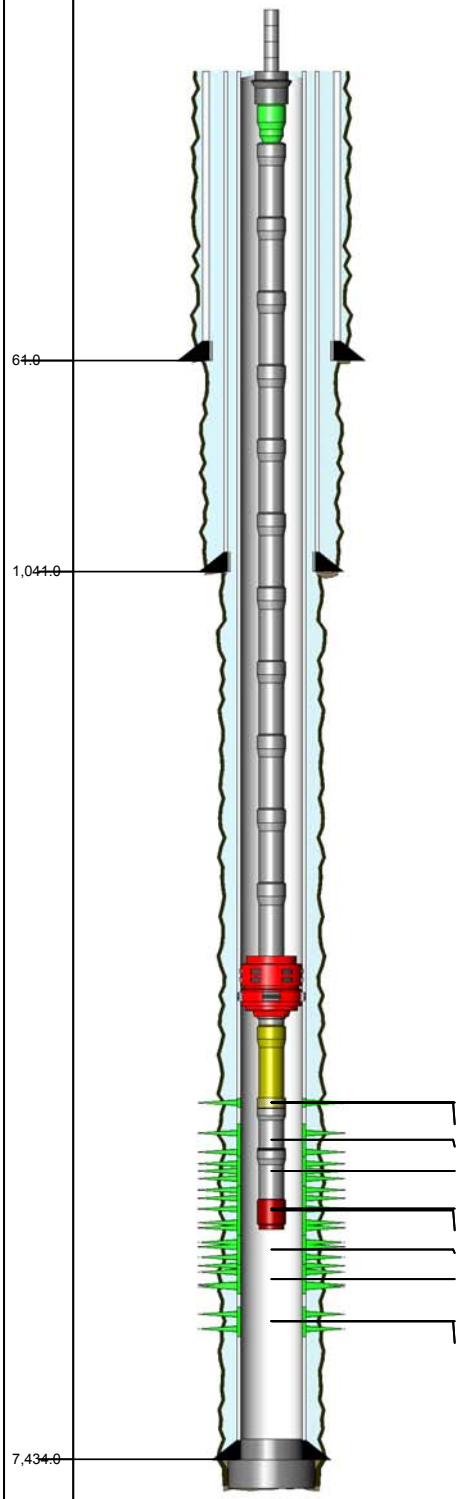

7,070.0ft, 7,084.0ft, PERFORATED, OPEN
7,070.0ft, 7,084.0ft, PERFORATED, OPEN
7,094.0ft, 7,127.0ft, PERFORATED, OPEN
7,127.0ft, 7,131.0ft, PERFORATED, OPEN
7,094.0ft, 7,216.0ft, PERFORATED, OPEN
7,131.0ft, 7,155.0ft, PERFORATED, OPEN
7,155.0ft, 7,165.0ft, PERFORATED, OPEN
7,165.0ft, 7,216.0ft, PERFORATED, OPEN
7,228.0ft, 7,246.0ft, PERFORATED, OPEN
7,228.0ft, 7,246.0ft, PERFORATED, OPEN

ROD STRING Report Date: 6/30/2008 00:00

Component	Top MD (ft)	Btm MD (ft)
POLROD	0.0	36.0
PNYROD	36.0	62.0
ROD	62.0	2,042.0
ROD	2,042.0	5,162.0
R-4PER	5,162.0	7,082.0
RSTBAR	7,082.0	7,086.0
INSPMP	7,086.0	7,116.0

TUBING STRING Report Date: 6/30/2008 00:00

Component	Top MD (ft)	Btm MD (ft)
TH-SGL	21.0	21.7
FATNIP	21.7	22.1
TBGJNT	22.1	6,926.5
AC	6,926.5	6,928.9
TBGJNT	6,928.9	7,053.9
PUPJNT	7,053.9	7,064.2
BJ	7,064.2	7,084.2
TBGJNT	7,084.2	7,115.3
STNIP	7,115.3	7,116.4
TBGJNT	7,116.4	7,146.5
STCOLL	7,146.5	7,146.9

PLUG BACK Report Date: 7/16/2001 00:00

Component	Top MD (ft)	Btm MD (ft)
CEMENT	7,326.0	7,434.0

PLUG BACK Report Date: 6/15/2001 00:00

Component	Top MD (ft)	Btm MD (ft)
CEMENT	7,434.0	7,444.0

CONDUCTOR CASING Report Date: 5/29/2001 00:00

Item	OD (in)	Grade	Wt. (ppf)	TopMD (ft)	BtmMD (ft)
CASING JOINT(S)	14.000			21.0	61.0

SURFACE CASING Report Date: 6/2/2001 00:00

Item	OD (in)	Grade	Wt. (ppf)	TopMD (ft)	BtmMD (ft)
CASING JOINT(S)	9.625	K-55	36.00	21.0	993.8
FLOAT COLLAR	9.625	K-55		993.8	993.9
CASING JOINT(S)	9.625	K-55	36.00	993.9	1,040.2
GUIDE SHOE	9.625	K-55		1,040.2	1,041.0

PRODUCTION CASING Report Date: 6/14/2001 00:00

Item	OD (in)	Grade	Wt. (ppf)	TopMD (ft)	BtmMD (ft)
CASING JOINT(S)	7.000	N-80	26.00	21.0	6,793.6
FLAG JOINT	7.000	N-80	26.00	6,793.6	6,821.4
CASING JOINT(S)	7.000	N-80	26.00	6,821.4	7,337.9
FLOAT COLLAR	7.000	N-80		7,337.9	7,340.3
CASING JOINT(S)	7.000	N-80	26.00	7,340.3	7,432.4
FLOAT SHOE	7.000	N-80		7,432.4	7,434.0

Well: 316X-35S S/T/R: 35S/30S/24E

CASING CEMENT DETAIL
- - -
Sfc Csg. Cmt Vol.: 644 c.f.
Hole Size: 12 1/4
Top Job: No
Rtns to Sfc: 7 bbls
TOC: sfc
- - -

Interm Csg. Cmt Vol.: 1275 c.f.
Hole Size: 8 3/4
Top Job: No
Rtns to Sfc:No
TTOC: sfc
- - -

Prod. Csg. Cmt Vol.:
Hole Size:
Top Job:
Rtns to Sfc:
TTOC:
- - -

Liner Cmt Vol.:
Hole Size:
Top Job:
Rtns to Sfc :
TTOC:
- - -
Top of Formation:
UBA: 6793 ft MD
BLW: 7304 ft MD

Volume Behind Pipe:
1.3 Yield Assumed
Theoretical Calculations (TTOC)

OCCIDENTAL OF ELK HILLS INC

316X-36S

Event: NOI - WORKOVER
Event End:
Sec. Reason:

Ground Level: 683.0ft
KB to Ground: 14.0ft
Datum: ORIGINAL KB @ 697.00ft (default)
API No.: 0402061533

Wellbore: ORIGINAL HOLE
Top TMD: 14.0ft
PBMD: 7,234.0ft
Btm TMD: 8,045.0ft
Spud Date: 5/16/1980 00:00
BH Coord X: 6,155,632.91uss ft BH Coord Y: 2,288,156.11uss ft

Casing Shoes (ft)	Schematic (8/1/2008)	Openings Top/Btm/Type/Status

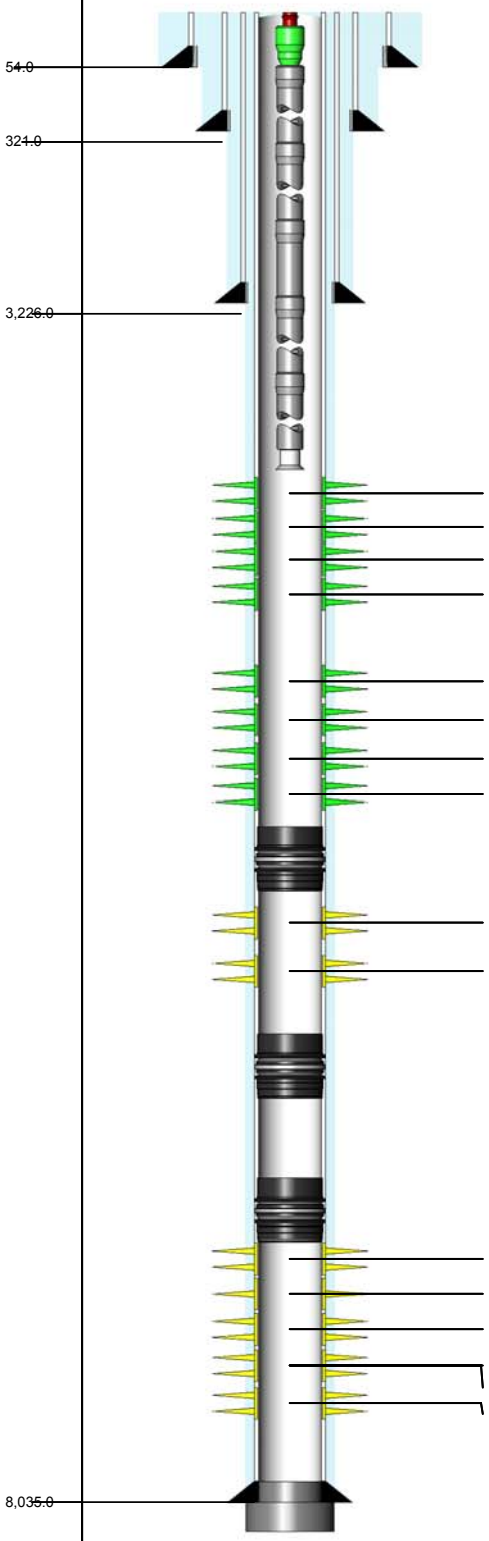

6,841.0ft, 6,856.0ft, PERFORATED, OPEN
6,864.0ft, 6,880.0ft, PERFORATED, OPEN
6,884.0ft, 6,892.0ft, PERFORATED, OPEN
6,904.0ft, 6,920.0ft, PERFORATED, OPEN
7,074.0ft, 7,096.0ft, PERFORATED, OPEN
7,124.0ft, 7,134.0ft, PERFORATED, OPEN
7,160.0ft, 7,169.0ft, PERFORATED, OPEN
7,180.0ft, 7,212.0ft, PERFORATED, OPEN
7,256.0ft, 7,264.0ft, PERFORATED, ISOLATED
7,282.0ft, 7,289.0ft, PERFORATED, ISOLATED
7,360.0ft, 7,445.0ft, PERFORATED, ISOLATED
7,465.0ft, 7,530.0ft, PERFORATED, ISOLATED
7,550.0ft, 7,645.0ft, PERFORATED, ISOLATED
7,665.0ft, 7,740.0ft, PERFORATED, ISOLATED
7,665.1ft, 7,740.1ft, PERFORATED, ISOLATED
7,760.0ft, 7,865.0ft, PERFORATED, ISOLATED

TUBING STRING Report Date: 7/10/2008 00:00

Component	Top MD (ft)	Btm MD (ft)
TH-DBB	14.0	14.8
FATNIP	14.8	15.4
CAS	15.4	6,799.3
BELCOL	6,799.3	6,799.8

PLUG BACK Report Date: 2/26/2008 00:00

Component	Top MD (ft)	Btm MD (ft)
BP-DR	7,234.0	7,236.5

PLUG BACK Report Date: 5/14/2004 00:00

Component	Top MD (ft)	Btm MD (ft)
BP-DR	7,333.0	7,335.6

PLUG BACK Report Date: 5/14/2004 00:00

Component	Top MD (ft)	Btm MD (ft)
BP-DR	7,351.0	7,353.6

PLUG BACK Report Date: 3/26/1981 00:00

Component	Top MD (ft)	Btm MD (ft)
CEMENT	7,979.0	8,035.0

PLUG BACK Report Date: 8/19/1980 00:00

Component	Top MD (ft)	Btm MD (ft)
CEMENT	8,035.0	8,045.0

CONDUCTOR CASING Report Date: 5/16/1980 00:00

Item Description	Btm MD(ft)
CASING JOINT(S) 20 in,	54.0

SURFACE CASING Report Date: 7/20/1980 00:00

Item Description	Btm MD (ft)
CASING JOINT(S) 13.375 in, , K-55, 68	319.0
GUIDE SHOE 13.375 in,	320.0

INTERMEDIATE CASING Report Date: 7/24/1980 00:00

Item Description	Btm MD (ft)
CASING JOINT(S) 9.625 in, , K-55, 40	3,224.0
GUIDE SHOE 9.625 in,	3,225.0

PRODUCTION CASING Report Date: 8/19/1980 00:00

Item Description	Btm MD (ft)
CASING JOINT(S) 7 in, , N-80, 29	78.5
CASING JOINT(S) 7 in, , K-55, 23	5,123.9
CASING JOINT(S) 7 in, , K-55, 26	6,732.6
CASING JOINT(S) 7 in, , N-80, 29	7,023.9
FLAG JOINT 7 in, , N-80, 29	7,047.4
CASING JOINT(S) 7 in, , N-80, 29	7,988.3
FLOAT COLLAR 7 in, , N-80, 29	7,990.2
CASING JOINT(S) 7 in, , N-80, 29	8,032.9
FLOAT SHOE 7 in, , N-80, 29	8,035.0

Well: 316X-36S S/T/R: 36S/30S/24E

CASING CEMENT DETAIL
- - -
Sfc Csg. Cmt Vol.: 354 cf
Hole Size: 17.5
Top Job:
Rtns to Sfc: 10 cf
TOC: sfc
- - -

Interm Csg. Cmt Vol.: 1730 cf
Hole Size: 12.25
Top Job: no
Rtns to Sfc: 122 cf
TOC: sfc
- - -

Prod. Csg. Cmt Vol.: 1650 cf
Hole Size: 8.75
Top Job: no
Rtns to Sfc: yes
TOC: sfc
- - -

Liner Cmt Vol.:
Hole Size:
Top Job:
Rtns to Sfc:
TOC:
- - -

Top of Formation:
UBA: 7360
BLW: 7872'

Volume Behind Pipe
1.15 Yield Assumed on
Theoretical Calculations (T)

OCCIDENTAL OF ELK HILLS INC

317-34S

Event: WELL MAINT - RIGLESS
Event End:
Sec. Reason:

Ground Level: 978.0ft
Datum: ORIGINAL KB @ 993.00ft (default)
API No.: 0402952983

Wellbore: ORIGINAL HOLE
PBMD: 7,368.0ft
Btm TMD: 7,500.0ft
Spud Date: 1/29/1976 00:00
BH Coord X: 6,145,694.78uss ft
BH Coord Y: 2,287,415.14uss ft

Casing Shoes (ft) | Schematic (9/1/2008) | Openings Top/Btm/Type/Status

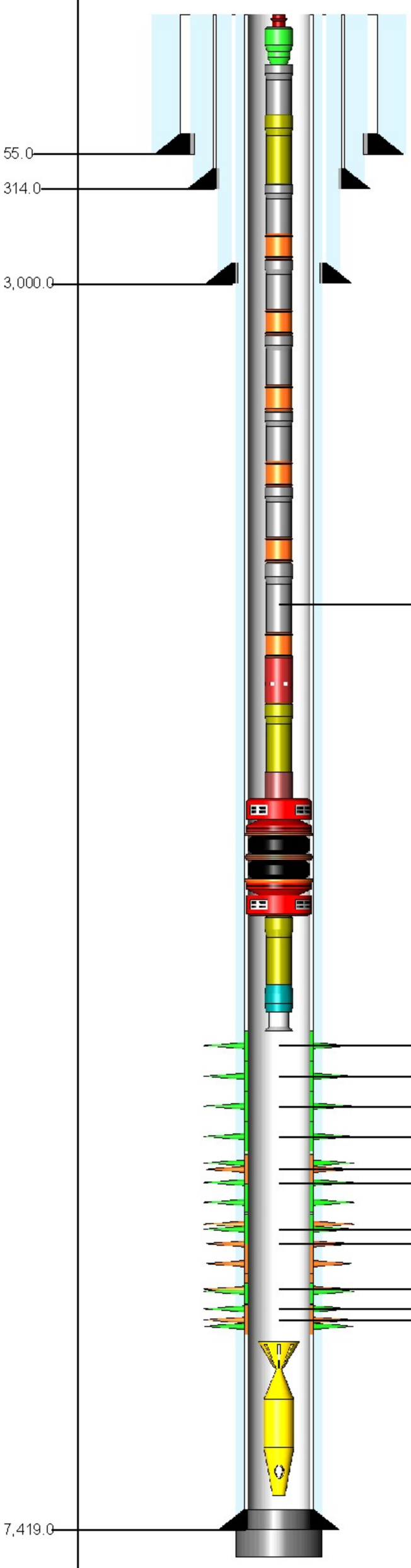

6,200.0ft, 6,201.0ft, WSO PERFS, SQUEE
6,526.0ft, 6,710.0ft, PERFORATED, OPEN
6,755.0ft, 6,910.0ft, PERFORATED, OPEN
6,920.0ft, 7,000.0ft, PERFORATED, OPEN
7,020.0ft, 7,159.0ft, PERFORATED, OPEN
7,187.0ft, 7,218.0ft, PERFORATED, SQUE
7,185.0ft, 7,225.0ft, PERFORATED, OPEN
7,250.1ft, 7,260.1ft, PERFORATED, OPEN
7,250.0ft, 7,262.0ft, PERFORATED, SQUE
7,272.0ft, 7,300.0ft, PERFORATED, SQUE
7,280.0ft, 7,350.1ft, PERFORATED, OPEN
7,310.0ft, 7,350.0ft, PERFORATED, SQUE

TUBING STRING Report Date: 10/8/2003 00:00

Component	Top MD (ft)	Btm MD (ft)
TH-DBB	15.0	15.6
FATNIP	15.6	16.3
TBGJNT	16.3	49.2
PUPJNT	49.2	59.2
TBGJNT	59.2	2,232.6
GLM-V	2,232.6	2,241.4
TBGJNT	2,241.4	3,797.5
GLM-V	3,797.5	3,806.0
TBGJNT	3,806.0	4,782.4
GLM-V	4,782.4	4,790.9
TBGJNT	4,790.9	5,383.2
GLM-V	5,383.2	5,391.4
TBGJNT	5,391.4	5,950.8
GLM-V	5,950.8	5,959.0
TBGJNT	5,959.0	6,485.3
GLM-V	6,485.3	6,493.8
SS-C	6,493.8	6,496.6
PUPJNT	6,496.6	6,506.6
ON-OFF	6,506.6	6,508.0
PKR-S	6,508.0	6,512.1
PUPJNT	6,512.1	6,520.1
PNIP-O	6,520.1	6,521.5
BELCOL	6,521.5	6,521.9

PLUG BACK Report Date: 4/17/1989 00:00

Component	Top MD (ft)	Btm MD (ft)
JUNK	7,368.0	7,372.5

PLUG BACK Report Date: 10/31/1976 00:00

Component	Top MD (ft)	Btm MD (ft)
CEMENT	7,376.0	7,419.0

PLUG BACK Report Date: 10/30/1976 00:00

Component	Top MD (ft)	Btm MD (ft)
CEMENT	7,419.0	7,500.0

CONDUCTOR CASING Report Date: 1/29/1976 00:00

Item	OD (in)	Grade	Wt. (ppf)	TopMD (ft)	BtmMD (ft)
CASING JOINT(S)	20.000			15.0	55.0

SURFACE CASING Report Date: 10/12/1976 00:00

Item	OD (in)	Grade	Wt. (ppf)	TopMD (ft)	BtmMD (ft)
CASING JOINT(S)	13.375	H-40	48.00	15.0	314.0

INTERMEDIATE CASING Report Date: 10/15/1976 00:00

Item	OD (in)	Grade	Wt. (ppf)	TopMD (ft)	BtmMD (ft)
CASING JOINT(S)	9.625	K-55	40.50	15.0	3,000.0

PRODUCTION CASING Report Date: 10/30/1976 00:00

Item	OD (in)	Grade	Wt. (ppf)	TopMD (ft)	BtmMD (ft)
CASING JOINT(S)	7.000	K-55	26.00	15.0	80.7
CASING JOINT(S)	7.000	K-55	23.00	80.7	5,077.3
CASING JOINT(S)	7.000	K-55	26.00	5,077.3	6,170.5
FLAG JOINT	7.000	K-55	26.00	6,170.5	6,183.8
CASING JOINT(S)	7.000	K-55	26.00	6,183.8	7,375.5
FLOAT COLLAR	7.000	K-55	26.00	7,375.5	7,377.4
CASING JOINT(S)	7.000	K-55	26.00	7,377.4	7,416.6
FLOAT SHOE	7.000	K-55	26.00	7,416.6	7,419.0

Well: 317-34S S/T/R: 34S/30S/24E

CASING CEMENT DETAIL
- - -
Sfc Csg. Cmt Vol.: 388 cf
Hole Size: 17.5"
Top Job: No
Rtns to Sfc: 24 cf
TOC: Sfc
- - -

Interm Csg. Cmt Vol.: 1088 cf
Hole Size: 12.25"
Top Job: No
Rtns to Sfc: 294 cf
TOC: Sfc
- - -

Prod. Csg. Cmt Vol.: 1600 cf
Hole Size: 8.75"
Top Job: No
Rtns to Sfc: 316 cf
TOC: Sfc

Liner Cmt Vol.:
Hole Size:
Top Job:
Rtns to Sfc:
TTOC:
- - -
Top of Formation:
UBA: 6834'
BLW: 7370'

Volume Behind Pipe:
1.3 Yield Assumed
Theoretical Calculations (TTOC)

OCCIDENTAL OF ELK HILLS INC

317-35S-RD1

Event: DEV COMPLETION
Event End: 8/30/2006 00:00
Sec. Reason:

Ground Level: 864.0ft
Datum: ORIGINAL KB @ 878.00ft (default)
API No.: 0402981531

Wellbore: ST 1
PBMD: 7,452.0ft
Btm TMD: 7,545.0ft
Spud Date: 11/9/1987 00:00
BH Coord X: 6,151,139.34uss ft
BH Coord Y: 2,287,690.46uss ft

Casing Shoes (ft) | Schematic (8/30/2006) | Openings Top/Btm/Type/Status

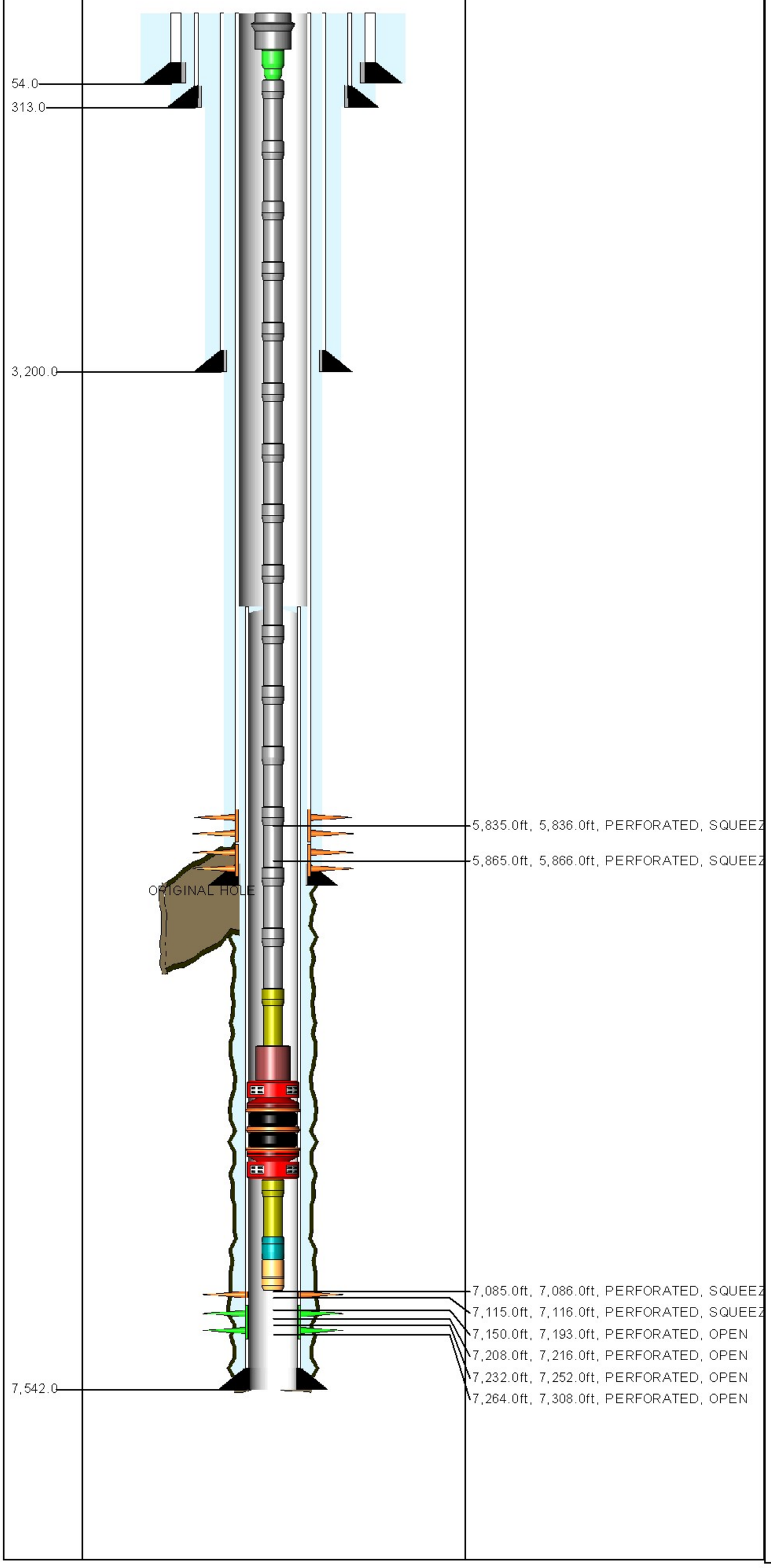

TUBING STRING Report Date: 8/29/2006 00:00

Component	Top MD (ft)	Btm MD (ft)
TH	14.0	14.7
FATNIP	14.7	15.3
TBGJNT	15.3	7,061.8
PUPJNT	7,061.8	7,065.9
ON-OFF	7,065.9	7,068.1
PKR	7,068.1	7,072.0
PUPJNT	7,072.0	7,080.2
PRONIP	7,080.2	7,081.5
WLREG	7,081.5	7,082.0

CONDUCTOR CASING Report Date: 11/9/1987 00:00

Item	OD (in)	Grade	Wt. (ppf)	TopMD (ft)	BtmMD (ft)
CASING JOINT(S)	26.000			14.0	54.0

SURFACE CASING Report Date: 12/21/1987 00:00

Item	OD (in)	Grade	Wt. (ppf)	TopMD (ft)	BtmMD (ft)
CASING JOINT(S)	20.000	K-55	94.00	14.0	313.0

INTERMEDIATE CASING Report Date: 12/30/1987 00:00

Item	OD (in)	Grade	Wt. (ppf)	TopMD (ft)	BtmMD (ft)
CASING JOINT(S)	13.375	K-55	68.00	14.0	3,200.0

PRODUCTION CASING Report Date: 1/11/1988 00:00

Item	OD (in)	Grade	Wt. (ppf)	TopMD (ft)	BtmMD (ft)
CASING JOINT(S)	9.625	N-80	47.00	14.0	78.1
CASING JOINT(S)	9.625	N-80	40.00	78.1	2,807.6
CASING JOINT(S)	9.625	N-80	43.50	2,807.6	5,359.7
CASING JOINT(S)	9.625	N-80	47.00	5,359.7	6,287.0

PRODUCTION LINER Report Date: 7/6/2006 00:00

Item	OD (in)	Grade	Wt. (ppf)	TopMD (ft)	BtmMD (ft)
LINER HANGER PACKER	7.000	4145H	26.00	5,764.7	5,777.6
LINER HANGER	7.000	XXX	26.00	5,777.6	5,783.4
	7.000	N-80	26.00	5,783.4	5,786.5
CASING JOINT(S)	7.000	N-80	26.00	5,786.5	7,452.0
	7.000	N-80	26.00	7,452.0	7,452.0
CASING JOINT(S)	7.000	N-80	26.00	7,452.0	7,498.0
	7.000	N-80	26.00	7,498.0	7,498.0
CASING JOINT(S)	7.000	N-80	26.00	7,498.0	7,541.5
FLOAT SHOE	7.000	N-80	26.00	7,541.5	7,542.0

Well: 317-35S-RD1 S/T/R: 34/30S/24E

CASING CEMENT DETAIL
- - -
Sfc Csg. Cmt Vol.: 450 cf
Hole Size: 24
Top Job: no
Rtns to Sfc: yes
TOC: Src
- - -

Interm Csg. Cmt Vol.: 3330 cf
Hole Size: 17-1/2"
Top Job: no
Rtns to Sfc: Yes
TOC: Sfc
- - -

Prod. Csg. Cmt Vol.: 2300 cf
Hole Size: 12-1/4"
Top Job: no
Rtns to Sfc: no
TOC: Sfc

Liner Cmt Vol.: 390 cf
Hole Size: 8-1/2"
Top Job: no
Rtns to Sfc: no
TTOC: Liner Top
- - -
Top of Formation:
UBA: 6824'
BLW: 7339'

Volume Behind Pipe:
1.3 Yield Assumed
Theoretical Calculations (TTOC)
RLW

OCCIDENTAL OF ELK HILLS INC

317A-35S

Event: WELL ENHANCEMENT
Event End:
Sec. Reason:

Ground Level: 874.2ft
Datum: ORIGINAL KB @ 895.20ft (default)
API No.: 0403020373

Wellbore: ORIGINAL HOLE
PBMD: 0.0ft
Btm TMD: 7,498.0ft
Spud Date: 4/25/2002 00:00
BH Coord X: 6,150,533.44uss ft
BH Coord Y: 2,287,570.68uss ft

Casing Shoes (ft) | Schematic (8/4/2009) | Openings Top/Btm/Type/Status

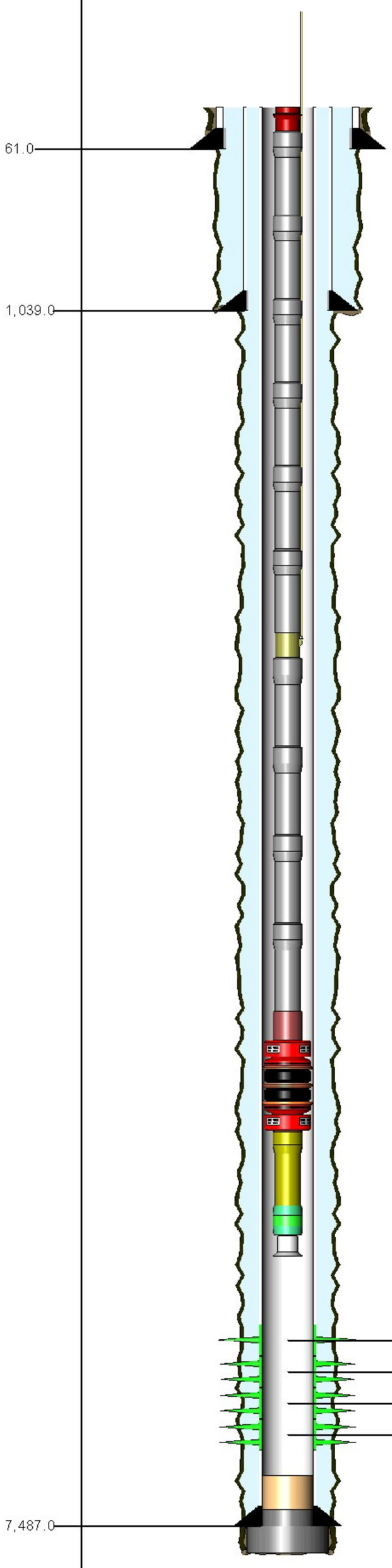

7,162.0ft, 7,178.0ft, PERFORATED, OPEN
7,183.0ft, 7,208.0ft, PERFORATED, OPEN
7,212.0ft, 7,222.0ft, PERFORATED, OPEN
7,226.0ft, 7,256.0ft, PERFORATED, OPEN

TUBING STRING Report Date: 6/8/2002 00:00

Component	Top MD (ft)	Btm MD (ft)
TH-DBB	21.0	21.6
TBGJNT	21.6	6,607.2
SPM	6,607.2	6,614.2
TBGJNT	6,614.2	6,645.6
ON-OFF	6,645.6	6,647.0
PKR-S	6,647.0	6,651.1
PUPJNT	6,651.1	6,657.0
LNDNIP	6,657.0	6,658.4
BELCOL	6,658.4	6,658.9

PLUG BACK Report Date: 7/21/2004 00:00

Component	Top MD (ft)	Btm MD (ft)
FILL	7,366.0	7,384.0

PLUG BACK Report Date: 6/7/2002 00:00

Component	Top MD (ft)	Btm MD (ft)
FILL	7,384.0	7,393.0

PLUG BACK Report Date: 6/6/2002 00:00

Component	Top MD (ft)	Btm MD (ft)
CEMENT	7,393.0	7,487.0

PLUG BACK Report Date: 5/9/2002 00:00

Component	Top MD (ft)	Btm MD (ft)
CEMENT	7,487.0	7,498.0

CONDUCTOR CASING Report Date: 4/19/2002 00:00

Item	OD (in)	Grade	Wt. (ppf)	TopMD (ft)	BtmMD (ft)
CASING JOINT(S)	14.000			21.0	61.0

SURFACE CASING Report Date: 4/26/2002 00:00

Item	OD (in)	Grade	Wt. (ppf)	TopMD (ft)	BtmMD (ft)
CASING JOINT(S)	8.625	K-55	24.00	21.0	994.7
	8.625			994.7	994.7
CASING JOINT(S)	8.625	K-55	24.00	994.7	1,037.8
GUIDE SHOE	8.625			1,037.8	1,039.0

PRODUCTION CASING Report Date: 5/9/2002 00:00

Item	OD (in)	Grade	Wt. (ppf)	TopMD (ft)	BtmMD (ft)
CASING JOINT(S)	5.500	N-80	17.00	21.0	6,368.1
FLAG JOINT	5.500	N-80	17.00	6,368.1	6,383.8
CASING JOINT(S)	5.500	N-80	17.00	6,383.8	7,399.5
FLOAT COLLAR	5.500			7,399.5	7,400.8
CASING JOINT(S)	5.500	N-80	17.00	7,400.8	7,485.9
FLOAT SHOE	5.500			7,485.9	7,487.0

Well: 317A-35S S/T/R: 35/30S/24E

CASING CEMENT DETAIL
- - -
Sfc Csg. Cmt Vol.: 755 cf
Hole Size: 12.25
Top Job: no
Rtns to Sfc: 84 cf
TOC: sfc
- - -

Interm Csg. Cmt Vol.:
Hole Size:
Top Job:
Rtns to Sfc:
TOC:
- - -

Prod. Csg. Cmt Vol.: 1632 cf
Hole Size: 7.875
Top Job: no
Rtns to Sfc: 0
TTOC: sfc

Liner Cmt Vol.:
Hole Size:
Top Job:
Rtns to Sfc:
TOC:
- - -
Top of Formation: picks from 327A-35S
UBA: 6848'
BLW: 7357'

Volume Behind Pipe:
1.3 Yield Assumed
Theoretical Calculations (TTOC)
JEP

OCCIDENTAL OF ELK HILLS INC

318-34S

Event: WELL MAINT - RIGLESS
Event End: 4/28/2006 00:00
Sec. Reason:

Ground Level: 1,014.0ft
Datum: ORIGINAL KB @ 1,034.00ft (default)
API No.: 0403003445

Wellbore: ORIGINAL HOLE
PBMD: 7,468.0ft
Btm TMD: 7,600.0ft
Spud Date: 5/17/1996 00:00
BH Coord X: 6,145,589.90uss ft
BH Coord Y: 2,286,721.30uss ft

Casing Shoes (ft) | Schematic (5/1/2006) | Openings Top/Btm/Type/Status

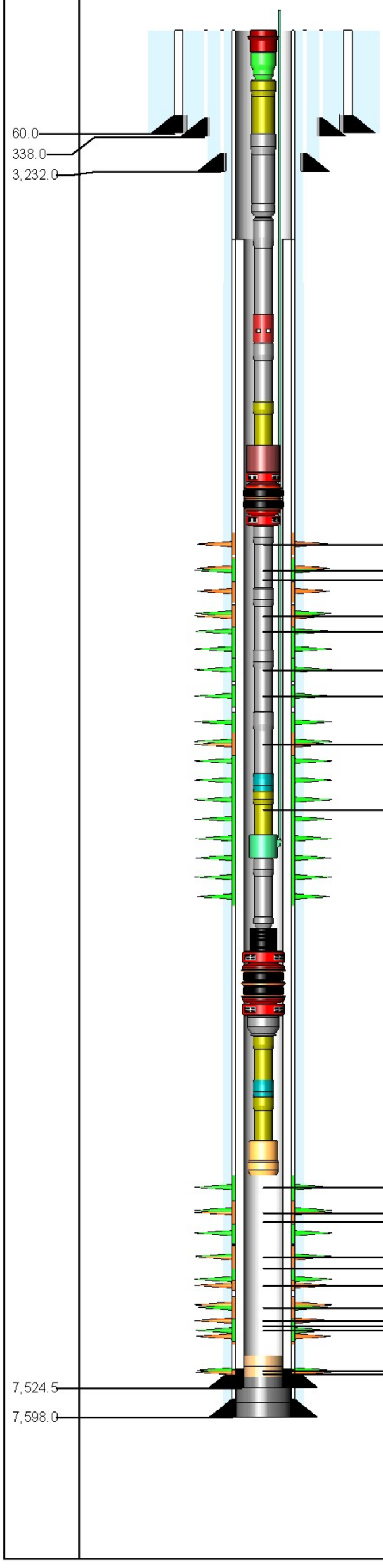

6,800.0ft, 6,842.0ft, PERFORATED, SQUEE
6,850.0ft, 6,871.0ft, PERFORATED, OPEN
6,848.0ft, 6,872.0ft, PERFORATED, SQUEE
6,880.0ft, 6,897.0ft, PERFORATED, SQUEE
6,880.0ft, 6,917.0ft, PERFORATED, OPEN
6,918.0ft, 6,939.0ft, PERFORATED, OPEN
6,948.0ft, 6,969.0ft, PERFORATED, OPEN
7,020.0ft, 7,043.0ft, PERFORATED, SQUEE
6,979.0ft, 7,101.0ft, PERFORATED, OPEN
7,131.0ft, 7,146.0ft, PERFORATED, OPEN
7,150.0ft, 7,168.0ft, PERFORATED, SQUEE
7,148.0ft, 7,169.0ft, PERFORATED, OPEN
7,176.0ft, 7,196.0ft, PERFORATED, SQUEE
7,174.0ft, 7,234.0ft, PERFORATED, OPEN
7,216.0ft, 7,235.0ft, PERFORATED, SQUEE
7,216.0ft, 7,235.0ft, REPERFORATED, OPE
7,272.0ft, 7,322.0ft, PERFORATED, OPEN
7,274.0ft, 7,342.0ft, PERFORATED, SQUEE
7,274.0ft, 7,370.0ft, PERFORATED, SQUEE
7,323.0ft, 7,335.0ft, PERFORATED, OPEN
7,400.0ft, 7,430.0ft, PERFORATED, OPEN
7,410.0ft, 7,425.0ft, PERFORATED, SQUEE
7,436.0ft, 7,449.0ft, PERFORATED, SQUEE

TUBING STRING Report Date: 8/26/2002 00:00

Component	Top MD (ft)	Btm MD (ft)
TH-DBB	20.0	20.6
FATNIP	20.6	22.0
PUPJNT	22.0	28.0
TBGJNT	28.0	5,929.4
XO	5,929.4	5,930.5
TBGJNT	5,930.5	6,709.5
SS-C	6,709.5	6,713.3
TBGJNT	6,713.3	6,745.4
PUPJNT	6,745.4	6,755.5
ON-OFF	6,755.5	6,757.2
PKR-S	6,757.2	6,762.9
TBGJNT	6,762.9	7,056.8
PNIP-O	7,056.8	7,057.9
PUPJNT	7,057.9	7,067.9
INJM-V	7,067.9	7,074.6
TBGJNT	7,074.6	7,106.7
XO	7,106.7	7,107.8
SA	7,107.8	7,108.8
PKR-S	7,108.8	7,118.1
XO	7,118.1	7,118.8
PUPJNT	7,118.8	7,122.8
PNIP-O	7,122.8	7,123.9
PUPJNT	7,123.9	7,128.0
WLREG	7,128.0	7,128.4

PLUG BACK Report Date: 5/19/2005 00:00

Component	Top MD (ft)	Btm MD (ft)
FILL	7,374.0	7,381.0

PLUG BACK Report Date: 7/8/2003 00:00

Component	Top MD (ft)	Btm MD (ft)
FILL	7,381.0	7,468.0

PLUG BACK Report Date: 12/3/2001 00:00

Component	Top MD (ft)	Btm MD (ft)
CEMENT	7,468.0	7,524.5

PLUG BACK Report Date: 11/26/2001 00:00

Component	Top MD (ft)	Btm MD (ft)
CEMENT	7,524.5	7,534.0

PLUG BACK Report Date: 11/21/2001 00:00

Component	Top MD (ft)	Btm MD (ft)
CEMENT	7,534.0	7,598.0

CONDUCTOR CASING Report Date: 5/17/1996 00:00

Item	OD (in)	Grade	Wt. (ppf)	TopMD (ft)	BtmMD (ft)
CASING JOINT(S)	20.000			20.0	60.0

SURFACE CASING Report Date: 7/4/1996 00:00

Item	OD (in)	Grade	Wt. (ppf)	TopMD (ft)	BtmMD (ft)
CASING JOINT(S)	13.375	K-55	54.50	20.0	338.0

INTERMEDIATE CASING Report Date: 7/11/1996 00:00

Item	OD (in)	Grade	Wt. (ppf)	TopMD (ft)	BtmMD (ft)
CASING JOINT(S)	9.625	K-55	36.00	20.0	3,232.0

PRODUCTION CASING Report Date: 7/27/1996 00:00

Item	OD (in)	Grade	Wt. (ppf)	TopMD (ft)	BtmMD (ft)
CASING JOINT(S)	7.000	N-80	26.00	20.0	2,829.3
CASING JOINT(S)	7.000	N-80	29.00	2,829.3	6,688.8
FLAG JOINT	7.000	N-80	29.00	6,688.8	6,711.8
CASING JOINT(S)	7.000	N-80	29.00	6,711.8	7,506.6
FLOAT COLLAR	7.000	N-80	29.00	7,506.6	7,507.9
CASING JOINT(S)	7.000	N-80	29.00	7,507.9	7,596.6
FLOAT SHOE	7.000	N-80	29.00	7,596.6	7,598.0

INNER LINER Report Date: 11/26/2001 00:00

Item	OD (in)	Grade	Wt. (ppf)	TopMD (ft)	BtmMD (ft)
LINER HANGER	7.000	N-80	15.00	6,212.0	6,225.4
CASING JOINT(S)	5.000	N-80	15.00	6,225.4	7,474.4
LANDING COLLAR	5.000	N-80	15.00	7,474.4	7,475.5
CASING JOINT(S)	5.000	N-80	15.00	7,475.5	7,521.9
FLOAT SHOE	5.000	N-80	15.00	7,521.9	7,524.5

Well: 318-34S S/T/R: 34S/30S/24E

CASING CEMENT DETAIL
- - -
Sfc Csg. Cmt Vol.: 695 cf
Hole Size: 17.5"
Top Job: No
Rtns to Sfc: 34 cf
TOC: Sfc
- - -

Interm Csg. Cmt Vol.: 1950 cf
Hole Size: 12.25"
Top Job: No
Rtns to Sfc: 112 cf
TOC: Sfc
- - -

Prod. Csg. Cmt Vol.: 1456 cf
Hole Size: 8.75"
Top Job: No
Rtns to Sfc:
TTOC: Sfc

Liner Cmt Vol.:
Hole Size:
Top Job:
Rtns to Sfc:
TTOC:
- - -
Top of Formation:
UBA: 6875'
BLW: 7470'

Volume Behind Pipe:
1.3 Yield Assumed
Theoretical Calculations (TTOC)

Event: WELL MAINT - RIGLESS
Event End:
Sec. Reason:
End Status:
Well Classification: DEVELOPMENT

OCCIDENTAL OF ELK HILLS INC

318-35S

Ground Level: 891.0ft
Datum: ORIGINAL KB @ 899.00ft (default)
API No.: 0402927771

Wellbore: ST 1
PBMD: 7,475.0ft
Btm TMD: 7,620.0ft
Spud Date: 11/12/1953 00:00
BH Coord X: 6,151,054.20uss ft
BH Coord Y: 2,286,977.93uss ft

Casing Shoes (ft) | Schematic (8/13/2009) | Openings Top/Btm/Type/Status

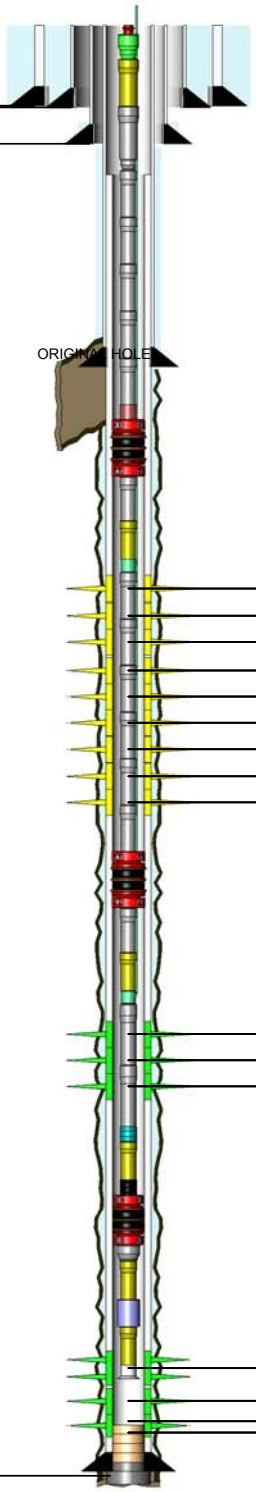

6,735.0ft, 6,754.0ft, PERFORATED, ISOLAT
6,765.0ft, 6,775.0ft, PERFORATED, ISOLAT
6,775.0ft, 6,788.0ft, PERFORATED, ISOLAT
6,808.0ft, 6,824.0ft, PERFORATED, ISOLAT
6,824.0ft, 6,827.0ft, PERFORATED, ISOLAT
6,827.0ft, 6,844.0ft, PERFORATED, ISOLAT
6,848.0ft, 6,875.0ft, PERFORATED, ISOLAT
6,880.0ft, 6,885.0ft, PERFORATED, ISOLAT
6,885.0ft, 6,911.0ft, PERFORATED, ISOLAT

7,208.0ft, 7,245.0ft, PERFORATED, OPEN
7,245.0ft, 7,255.0ft, PERFORATED, OPEN
7,255.0ft, 7,268.0ft, PERFORATED, OPEN

7,308.0ft, 7,332.0ft, PERFORATED, OPEN
7,342.0ft, 7,375.0ft, PERFORATED, OPEN
7,375.0ft, 7,382.0ft, PERFORATED, OPEN
7,382.0ft, 7,414.0ft, PERFORATED, OPEN

TUBING STRING Report Date: 8/31/2004 00:00

Component	Top MD (ft)	Btm MD (ft)
TH-DBB	8.0	8.7
FATNIP	8.7	9.3
PUPJNT	9.3	25.5
TBGJNT	25.5	5,743.9
XO	5,743.9	5,745.0
TBGJNT	5,745.0	6,652.2
ON-OFF	6,652.2	6,653.5
PKR-S	6,653.5	6,658.7
TBGJNT	6,658.7	6,690.4
PUPJNT	6,690.4	6,694.6
INJM-V	6,694.6	6,701.4
TBGJNT	6,701.4	7,110.9
PKR-S	7,110.9	7,116.1
TBGJNT	7,116.1	7,147.5
PUPJNT	7,147.5	7,151.5
INJM-V	7,151.5	7,158.3
TBGJNT	7,158.3	7,282.7
PNIP-O	7,282.7	7,283.8
PUPJNT	7,283.8	7,294.0
SA	7,294.0	7,295.0

PACKER ASSEMBLY (RETRIEVABLE) Report Date: 11/16/2003 00:00

Component	Top MD (ft)	Btm MD (ft)
PKR-S	7,295.0	7,299.7
XO	7,299.7	7,299.9
PUPJNT	7,299.9	7,304.0
NOGO-O	7,304.0	7,305.4
PUPJNT	7,305.4	7,309.5
BELCOL	7,309.5	7,309.9

PLUG BACK Report Date: 3/3/2005 00:00

Component	Top MD (ft)	Btm MD (ft)
FILL	7,378.0	7,387.0

PLUG BACK Report Date: 11/4/2004 00:00

Component	Top MD (ft)	Btm MD (ft)
FILL	7,387.0	7,475.0

PLUG BACK Report Date: 8/27/2003 00:00

Component	Top MD (ft)	Btm MD (ft)
FILL	7,475.0	7,503.0

PLUG BACK Report Date: 11/14/2002 00:00

Component	Top MD (ft)	Btm MD (ft)
FILL	7,503.0	7,524.0

PLUG BACK Report Date: 10/18/2001 00:00

Component	Top MD (ft)	Btm MD (ft)
CEMENT	7,524.0	7,618.2

PLUG BACK Report Date: 10/16/2001 00:00

Component	Top MD (ft)	Btm MD (ft)
CEMENT	7,618.2	7,620.0

CONDUCTOR CASING Report Date: 11/12/1953 00:00

Item	OD (in)	Grade	Wt. (ppf)	TopMD (ft)	BtmMD (ft)
CASING JOINT(S)	26.000		68.00	8.0	37.0

SURFACE CASING Report Date: 1/20/1954 00:00

Item	OD (in)	Grade	Wt. (ppf)	TopMD (ft)	BtmMD (ft)
CASING JOINT(S)	16.000	H-40	65.00	8.0	210.0

INTERMEDIATE CASING Report Date: 1/25/1954 00:00

Item	OD (in)	Grade	Wt. (ppf)	TopMD (ft)	BtmMD (ft)
CASING JOINT(S)	10.750	J-55	45.50	8.0	73.0
CASING JOINT(S)	10.750	J-55	40.50	73.0	2,084.0
CASING JOINT(S)	10.750	J-55	45.50	2,084.0	3,300.0

PRODUCTION CASING Report Date: 2/18/1954 00:00

Item	OD (in)	Grade	Wt. (ppf)	TopMD (ft)	BtmMD (ft)
CASING JOINT(S)	7.000	S-95	26.00	8.0	83.0
CASING JOINT(S)	7.000	S-95	23.00	83.0	5,791.0
CASING JOINT(S)	7.000	S-95	26.00	5,791.0	6,810.0

LINER Report Date: 10/16/2001 00:00

Item	OD (in)	Grade	Wt. (ppf)	TopMD (ft)	BtmMD (ft)
LINER HANGER PACKER	6.276	N-80	15.00	5,836.0	5,848.9
PBR	6.276	N-80	15.00	5,848.9	5,851.6
LINER HANGER	6.276	N-80	15.00	5,851.6	5,858.1
CROSSOVER	5.000	N-80	15.00	5,858.1	5,861.9
CASING JOINT(S)	5.000	N-80	15.00	5,861.9	7,523.6
LANDING COLLAR	5.000			7,523.6	7,524.1
CASING JOINT(S)	5.000	N-80	15.00	7,524.1	7,570.3
FLOAT COLLAR	5.000			7,570.3	7,570.3
CASING JOINT(S)	5.000	N-80	15.00	7,570.3	7,616.4
FLOAT SHOE	5.000			7,616.4	7,618.2

Well: 318-35S S/T/R: 35S/30S/24E

CASING CEMENT DETAIL
- - -
Sfc Csg. Cmt Vol.: 500 sks.
Hole Size: 22
Top Job: Not Reported
Rtns to Sfc: Not Reported
TTOC: sfc
- - -

Interm Csg. Cmt Vol.: 600 sks
Hole Size: 15"
Top Job: Not Reported
Rtns to Sfc:Not Reported
TTOC: 1993
- - -

Prod. Csg. Cmt Vol.: 500 sks
Hole Size: 8 3/4
Top Job: Not Reported
Rtns to Sfc: Not Reported
TTOC: sfc
- - -

Liner Cmt Vol.: 139 c.f.
Hole Size: 6 1/8
Top Job: No
Rtns to Sfc : yes
TTOC: sfc
- - -
Top of Formation:
UBA: 6885 ft MD
BLW: 7420 ft MD

Volume Behind Pipe:
1.3 Yield Assumed
Theoretical Calculations (TTOC)

OCCIDENTAL OF ELK HILLS INC

318A-35S

Event: ABANDONMENT
Event End: 10/28/2008 00:00
Sec. Reason: PREPARE FOR REDRILLING

Ground Level: 925.4ft
Datum: ORIGINAL KB @ 946.40ft (default)
API No.: 0403020777

Wellbore: ORIGINAL HOLE
PBMD: 6,400.0ft
Btm TMD: 7,558.0ft
Spud Date: 6/27/2002 00:00
BH Coord X: 6,150,817.18uss ft
BH Coord Y: 2,287,308.76uss ft

Casing Shoes (ft)

Schematic (11/1/2008)

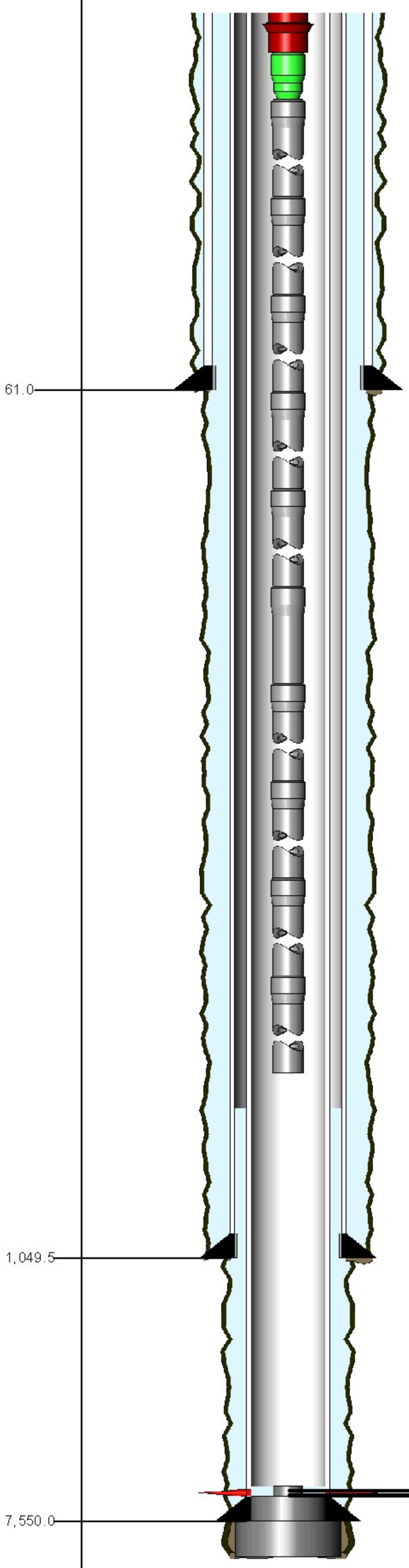

Openings Top/Btm/Type/Status

6,775.0ft, 6,780.0ft, PERFORATED, ABANDO
6,780.0ft, 6,786.0ft, PERFORATED, ABANDO
6,786.0ft, 6,796.0ft, PERFORATED, ABANDO
6,815.0ft, 6,825.0ft, PERFORATED, ABANDO
6,825.0ft, 6,827.0ft, PERFORATED, ABANDO
6,827.0ft, 6,854.0ft, PERFORATED, ABANDO
6,860.0ft, 6,892.0ft, PERFORATED, ABANDO
6,898.0ft, 6,920.0ft, PERFORATED, ABANDO
7,223.0ft, 7,254.0ft, PERFORATED, ABANDO
7,223.0ft, 7,254.0ft, PERFORATED, ABANDO
7,260.0ft, 7,270.0ft, PERFORATED, ABANDO
7,260.0ft, 7,272.0ft, PERFORATED, ABANDO
7,270.0ft, 7,272.0ft, PERFORATED, ABANDO
7,278.0ft, 7,280.0ft, PERFORATED, ABANDO
7,278.0ft, 7,292.0ft, PERFORATED, ABANDO
7,280.0ft, 7,284.0ft, PERFORATED, ABANDO
7,284.0ft, 7,292.0ft, PERFORATED, ABANDO
7,346.0ft, 7,354.0ft, PERFORATED, ABANDO
7,346.0ft, 7,354.0ft, PERFORATED, ABANDO
7,370.0ft, 7,382.0ft, PERFORATED, ABANDO
7,373.0ft, 7,378.0ft, PERFORATED, ABANDO
7,386.0ft, 7,396.0ft, PERFORATED, ABANDO
7,390.0ft, 7,402.0ft, PERFORATED, ABANDO
7,396.0ft, 7,400.0ft, PERFORATED, ABANDO
7,396.0ft, 7,400.0ft, REPERFORATED, ABAN
7,400.0ft, 7,410.0ft, PERFORATED, ABANDO
7,418.0ft, 7,426.0ft, PERFORATED, ABANDO
7,419.0ft, 7,421.0ft, PERFORATED, ABANDO
7,421.0ft, 7,425.0ft, PERFORATED, ABANDO
7,421.0ft, 7,425.0ft, REPERFORATED, ABAN
7,425.0ft, 7,440.0ft, PERFORATED, ABANDO
7,432.0ft, 7,440.0ft, PERFORATED, ABANDO

TUBING STRING Report Date: 10/27/2008 00:00

Component	Top MD (ft)	Btm MD (ft)
TH-DBB	21.0	21.6
FATNIP	21.6	22.8
CAS	22.8	150.9

PLUG BACK Report Date: 10/24/2008 00:00

Component	Top MD (ft)	Btm MD (ft)
CEMENT	6,400.0	7,453.0

PLUG BACK Report Date: 4/4/2008 00:00

Component	Top MD (ft)	Btm MD (ft)
FISH	6,642.0	6,991.2

PLUG BACK Report Date: 7/21/2002 00:00

Component	Top MD (ft)	Btm MD (ft)
CEMENT	7,453.0	7,550.0

PLUG BACK Report Date: 7/21/2002 00:00

Component	Top MD (ft)	Btm MD (ft)
CEMENT	7,550.0	7,558.0

CONDUCTOR CASING Report Date: 6/24/2002 00:00

Item	OD (in)	Grade	Wt. (ppf)	TopMD (ft)	BtmMD (ft)
CASING JOINT(S)	14.000			21.0	61.0

SURFACE CASING Report Date: 6/28/2002 00:00

Item	OD (in)	Grade	Wt. (ppf)	TopMD (ft)	BtmMD (ft)
CASING JOINT(S)	9.625	K-55	36.00	21.0	1,003.6
	9.625		36.00	1,003.6	1,003.6
CASING JOINT(S)	9.625	K-55	36.00	1,003.6	1,048.4
GUIDE SHOE	9.625		36.00	1,048.4	1,049.5

PRODUCTION CASING Report Date: 7/12/2002 00:00

Item	OD (in)	Grade	Wt. (ppf)	TopMD (ft)	BtmMD (ft)
CASING JOINT(S)	7.000	N-80	29.00	21.0	6,869.3
FLAG JOINT	7.000	N-80	29.00	6,869.3	6,894.4
CASING JOINT(S)	7.000	N-80	29.00	6,894.4	7,453.0
FLOAT COLLAR	7.000	N-80	29.00	7,453.0	7,454.4
CASING JOINT(S)	7.000	N-80	29.00	7,454.4	7,548.5
FLOAT SHOE	7.000	N-80	29.00	7,548.5	7,550.0

Well: 318A-35S S/T/R: 35/30S/24E

CASING CEMENT DETAIL
- - -
Sfc Csg. Cmt Vol.: 675 cf
Hole Size: 12.25
Top Job: no
Rtns to Sfc: not recorded
TTOC: sfc
- - -

Interm Csg. Cmt Vol.:
Hole Size:
Top Job:
Rtns to Sfc:
TOC:
- - -

Prod. Csg. Cmt Vol.: 1289 cf
Hole Size: 8.75
Top Job: no
Rtns to Sfc: 0
TTOC: sfc

Liner Cmt Vol.:
Hole Size:
Top Job:
Rtns to Sfc:
TOC:
- - -
Top of Formation:
UBA: 6894'
BLW: 7444'

Volume Behind Pipe:
1.3 Yield Assumed
Theoretical Calculations (TTOC)
JEP

OCCIDENTAL OF ELK HILLS INC

321-2G

Event: WELL MAINT - RIG
Event End: 11/6/2007 00:00
Sec. Reason: BODY BREAK
End Status: FINISHED - SUCCESS
Well Classification: DEVELOPMENT

Ground Level: 854.0ft
Datum: ORIGINAL KB @ 871.00ft (default)
API No.: 0402979858

Wellbore: ORIGINAL HOLE
PBMD: 7,025.0ft
Btm TMD: 7,820.0ft
Spud Date: 6/28/1987 00:00
BH Coord X: 6,151,749.74uss ft
BH Coord Y: 2,286,582.03uss ft

Casing Shoes (ft) | Schematic (12/1/2007) | Openings Top/Btm/Type/Status

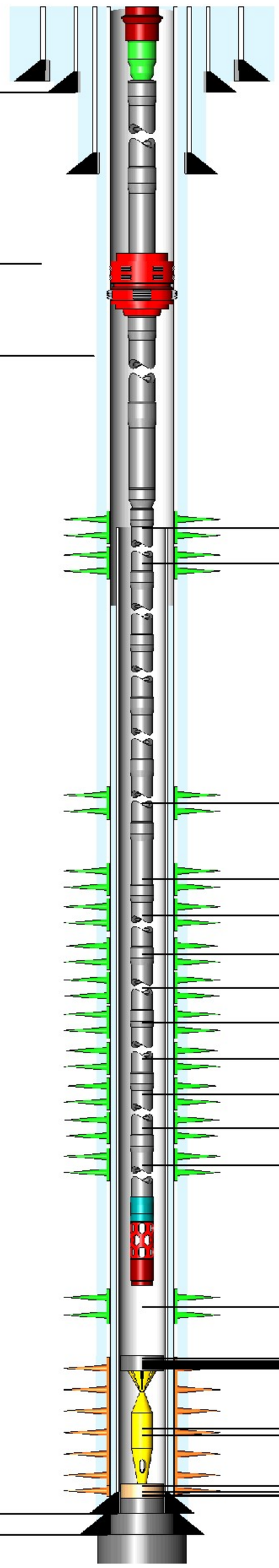

319.0
74.0
3,233.0
7,686.0
7,801.0

6,192.0ft, 6,212.0ft, PERFORATED, OPE
6,228.0ft, 6,253.0ft, PERFORATED, OPE
6,474.0ft, 6,560.0ft, PERFORATED, OPE
6,736.0ft, 6,742.0ft, PERFORATED, OPE
6,756.0ft, 6,766.0ft, PERFORATED, OPE
6,792.0ft, 6,798.0ft, PERFORATED, OPE
6,804.0ft, 6,808.0ft, PERFORATED, OPE
6,816.0ft, 6,821.0ft, PERFORATED, OPE
6,834.0ft, 6,838.0ft, PERFORATED, OPE
6,848.0ft, 6,851.0ft, PERFORATED, OPE
6,856.0ft, 6,868.0ft, PERFORATED, OPE
6,878.0ft, 6,915.0ft, PERFORATED, SQU
6,878.0ft, 6,915.0ft, PERFORATED, OPE
6,930.0ft, 6,980.0ft, PERFORATED, OPE
6,930.0ft, 6,980.0ft, REPERFORATED, S
7,056.0ft, 7,087.0ft, PERFORATED, SQU
7,107.0ft, 7,122.0ft, PERFORATED, SQU
7,122.0ft, 7,142.0ft, PERFORATED, SQU
7,160.0ft, 7,173.0ft, PERFORATED, SQU
7,183.0ft, 7,208.0ft, PERFORATED, SQU
7,225.0ft, 7,250.0ft, PERFORATED, SQU
7,250.0ft, 7,280.0ft, PERFORATED, SQU
7,300.0ft, 7,346.0ft, PERFORATED, SQU
7,310.0ft, 7,366.0ft, PERFORATED, SQU
7,346.0ft, 7,366.0ft, PERFORATED, SQU
7,442.0ft, 7,528.0ft, PERFORATED, SQU
7,465.0ft, 7,525.0ft, PERFORATED, SQU
7,550.0ft, 7,579.0ft, PERFORATED, SQU
7,570.0ft, 7,609.0ft, REPERFORATED, S
7,570.0ft, 7,609.0ft, PERFORATED, SQU
7,579.0ft, 7,609.0ft, PERFORATED, SQU

ROD STRING Report Date: 11/4/2007 00:00

Component	Top MD (ft)	Btm MD (ft)
POLROD	0.0	30.0
PNYROD	30.0	56.0
R-4PER	56.0	2,696.0
R-4PER	2,696.0	6,056.0
R-5PER	6,056.0	6,896.0
RSTBAR	6,896.0	6,900.0
INSPMP	6,900.0	6,924.0

TUBING STRING Report Date: 6/4/2007 00:00

Component	Top MD (ft)	Btm MD (ft)
TH-DBB	17.0	17.6
FATNIP	17.6	18.3
CAS	18.3	5,922.6
AC	5,922.6	5,924.9
CAS	5,924.9	6,175.8
XO	6,175.8	6,177.0
CAS	6,177.0	6,917.0
STNIP	6,917.0	6,918.0
PERFJT	6,918.0	6,922.0
STCOLL	6,922.0	6,922.5

PLUG BACK Report Date: 4/28/2003 00:00

Component	Top MD (ft)	Btm MD (ft)
CEMENT	7,025.0	7,309.0

PLUG BACK Report Date: 6/6/1996 00:00

Component	Top MD (ft)	Btm MD (ft)
JUNK	7,309.0	7,318.0

PLUG BACK Report Date: 6/5/1996 00:00

Component	Top MD (ft)	Btm MD (ft)
FILL	7,318.0	7,663.0

PLUG BACK Report Date: 8/19/1994 00:00

Component	Top MD (ft)	Btm MD (ft)
CEMENT	7,663.0	7,686.0

PLUG BACK Report Date: 8/11/1994 00:00

Component	Top MD (ft)	Btm MD (ft)
CEMENT	7,686.0	7,801.0

PLUG BACK Report Date: 7/27/1987 00:00

Component	Top MD (ft)	Btm MD (ft)
CEMENT	7,801.0	7,820.0

CONDUCTOR CASING Report Date: 6/28/1987 00:00

Item	OD (in)	Grade	Wt. (ppf)	TopMD (ft)	BtmMD (ft)
CASING JOINT(S)	20.000		94.00	17.0	57.0

SURFACE CASING Report Date: 7/5/1987 00:00

Item	OD (in)	Grade	Wt. (ppf)	TopMD (ft)	BtmMD (ft)
CASING JOINT(S)	13.375	H-40	48.00	17.0	319.0

INTERMEDIATE CASING Report Date: 7/11/1987 00:00

Item	OD (in)	Grade	Wt. (ppf)	TopMD (ft)	BtmMD (ft)
CASING JOINT(S)	9.625	K-55	40.00	17.0	3,216.0

PRODUCTION CASING Report Date: 7/27/1987 00:00

Item	OD (in)	Grade	Wt. (ppf)	TopMD (ft)	BtmMD (ft)
CASING JOINT(S)	7.000	N-80	26.00	17.0	89.0
CASING JOINT(S)	7.000	K-55	23.00	89.0	5,051.0
CASING JOINT(S)	7.000	K-55	26.00	5,051.0	6,954.2
FLAG JOINT	7.000	K-55	26.00	6,954.2	6,977.4
CASING JOINT(S)	7.000	K-55	26.00	6,977.4	7,106.0
CASING JOINT(S)	7.000	N-80	26.00	7,106.0	7,801.0

LINER Report Date: 8/11/1994 00:00

Item	OD (in)	Grade	Wt. (ppf)	TopMD (ft)	BtmMD (ft)
SEAL PROTECTOR	5.000			6,349.2	6,357.8
SEALBORE EXTENSION	5.000			6,357.8	6,362.3
CASING HANGER	5.000	N-80	18.00	6,362.3	6,371.4
CASING JOINT(S)	5.000	N-80	18.00	6,371.4	7,682.7
FLOAT COLLAR	5.500			7,682.7	7,684.7
GUIDE SHOE	5.562			7,684.7	7,686.0

Well: 321-2G S/T/R: 2G/31S/24E

CASING CEMENT DETAIL
- - -
Sfc Csg. Cmt Vol.: 425 cf
Hole Size: 17.5"
Top Job: No
Rtns to Sfc: 56 cf
TOC: Sfc
- - -

Interm Csg. Cmt Vol.: 1480 cf
Hole Size: 12.25"
Top Job: No
Rtns to Sfc: 45 cf
TOC: Sfc
- - -

Prod. Csg. Cmt Vol.: 1360 cf
Hole Size: 8.75"
Top Job: No
Rtns to Sfc:
TTOC: Sfc
- - -

Liner Cmt Vol.: 146 cf
Hole Size: 6.25"
Top Job: No
Rtns to Sfc: No
TTOC: TOL
- - -
Top of Formation:
UBA: 7034'
BLW: 7610'

Volume Behind Pipe:
1.3 Yield Assumed
Theoretical Calculations (TTOC)

OCCIDENTAL OF ELK HILLS INC

321H-2G

Event: WELL MAINT - RIG
Event End: 2/24/2009 00:00
Sec. Reason: BODY BREAK
End Status: FINISHED - SUCCESS
Well Classification: DEVELOPMENT

Ground Level: 855.0ft
Datum: ORIGINAL KB @ 878.00ft (default)
API No.: 0403025586

Wellbore: ST1
PBMD: 9,021.0ft
Btm TMD: 9,073.0ft
Spud Date: 8/25/2004 00:00
BH Coord X: 6,153,575.31uss ft
BH Coord Y: 2,288,068.88uss ft

Casing Shoes (ft)	Schematic (3/1/2009)	Openings Top/Btm/Type/Status

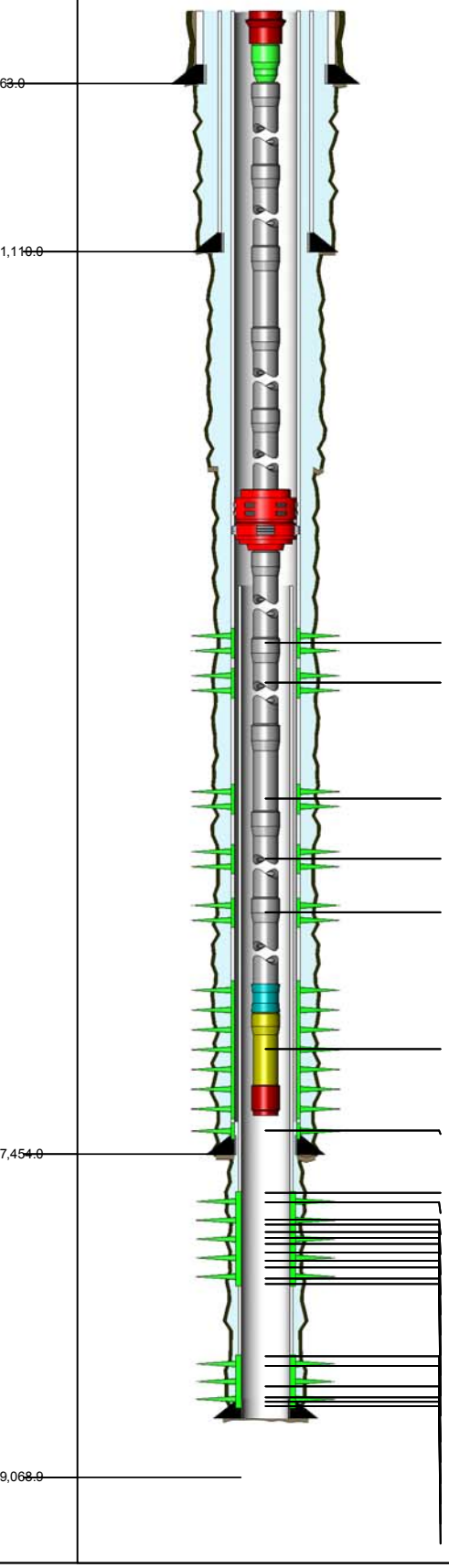

6,542.0ft, 6,590.0ft, PERFORATED, OPEN
6,620.0ft, 6,650.0ft, PERFORATED, OPEN
6,894.0ft, 6,930.0ft, PERFORATED, OPEN
7,006.0ft, 7,026.0ft, PERFORATED, OPEN
7,080.0ft, 7,106.0ft, PERFORATED, OPEN
7,200.0ft, 7,236.0ft, PERFORATED, OPEN
7,260.0ft, 7,360.0ft, PERFORATED, OPEN
7,682.0ft, 7,700.0ft, PERFORATED, OPEN
7,745.0ft, 7,753.0ft, PERFORATED, OPEN
7,847.0ft, 7,860.0ft, PERFORATED, OPEN
7,870.0ft, 7,897.0ft, PERFORATED, OPEN
7,915.0ft, 7,945.0ft, PERFORATED, OPEN
7,957.0ft, 7,974.0ft, PERFORATED, OPEN
7,992.0ft, 8,012.0ft, PERFORATED, OPEN
8,046.0ft, 8,062.0ft, PERFORATED, OPEN
8,090.0ft, 8,120.0ft, PERFORATED, OPEN
8,134.0ft, 8,156.0ft, PERFORATED, OPEN
8,202.0ft, 8,225.0ft, PERFORATED, OPEN
8,237.0ft, 8,256.0ft, PERFORATED, OPEN
8,677.0ft, 8,697.0ft, PERFORATED, OPEN
8,732.0ft, 8,760.0ft, PERFORATED, OPEN
8,850.0ft, 8,894.0ft, PERFORATED, OPEN
8,935.0ft, 8,942.0ft, PERFORATED, OPEN
8,960.0ft, 8,970.0ft, PERFORATED, OPEN
8,985.0ft, 9,000.0ft, PERFORATED, OPEN

ROD STRING — Report Date: 2/20/2009 00:00

Component	Top MD (ft)	Btm MD (ft)
POLRDL	0.0	36.0
PNYROD	36.0	62.0
ROD	62.0	2,102.0
R-4PER	2,102.0	4,022.0
R-4PER	4,022.0	7,172.0
RSTBAR	7,172.0	7,175.0
INSPMP	7,175.0	7,205.0

TUBING STRING — Report Date: 2/19/2009 00:00

Component	Top MD (ft)	Btm MD (ft)
TH-DBB	23.0	23.6
FATNIP	23.6	24.3
CAS	24.3	6,288.6
AC	6,288.6	6,290.9
CAS	6,290.9	7,206.0
STNIP	7,206.0	7,207.1
PUPJNT	7,207.1	7,215.3
STCOLL	7,215.3	7,215.7

CONDUCTOR CASING — Report Date: 8/9/2004 00:00

Item	OD (in)	Grade	Wt. (ppf)	TopMD (ft)	BtmMD (ft)
CASING JOINT(S)	14.000			23.0	63.0

SURFACE CASING — Report Date: 8/27/2004 00:00

Item	OD (in)	Grade	Wt. (ppf)	TopMD (ft)	BtmMD (ft)
CASING JOINT(S)	9.625	K-55	36.00	23.0	42.3
CASING JOINT(S)	9.625	K-55	36.00	42.3	1,064.5
	9.625	K-55	36.00	1,064.5	1,064.5
CASING JOINT(S)	9.625	K-55	36.00	1,064.5	1,109.1
GUIDE SHOE	9.625	K-55	36.00	1,109.1	1,110.0

INTERMEDIATE CASING — Report Date: 9/7/2004 00:00

Item	OD (in)	Grade	Wt. (ppf)	TopMD (ft)	BtmMD (ft)
CASING HANGER	7.000			23.0	24.0
PUP JOINT	7.000	N-80	26.00	24.0	27.2
CASING JOINT(S)	7.000	N-80	26.00	27.2	3,602.8
CASING JOINT(S)	7.000	P-110	26.00	3,602.8	3,781.1
CASING JOINT(S)	7.000	N-80	26.00	3,781.1	7,378.2
FLOAT COLLAR	7.000	N-80	26.00	7,378.2	7,379.5
CASING JOINT(S)	7.000	N-80	26.00	7,379.5	7,453.0
FLOAT SHOE	7.000	N-80	26.00	7,453.0	7,454.0

LINER — Report Date: 9/14/2004 00:00

Item	OD (in)	Grade	Wt. (ppf)	TopMD (ft)	BtmMD (ft)
LINER HANGER PACKER	5.600			7,245.6	7,251.9
CROSSOVER	6.050			7,251.9	7,253.2
LINER TIEBACK SEAL ASSEMBLY	3.125			7,253.2	7,247.2
LINER HANGER	5.000			7,247.2	7,265.4
CASING JOINT(S)	5.000	N-80	15.00	7,265.4	9,015.7
LANDING COLLAR	5.000			9,015.7	9,015.7
FLOAT COLLAR	5.000			9,015.7	9,015.7
CASING JOINT(S)	5.000	N-80	15.00	9,015.7	9,061.1
FLOAT SHOE	5.000			9,061.1	9,062.9

Well: 321H-2G S/T/R: 2G/31S/24E

CASING CEMENT DETAIL
- - -
Sfc Csg. Cmt Vol.: 510 cf
Hole Size: 8.75"
Top Job: No
Rtns to Sfc: yes
TOC: sfc
- - -

Interm Csg. Cmt Vol.:
Hole Size:
Top Job:
Rtns to Sfc:
TOC:
- - -

Prod. Csg. Cmt Vol.: 1520 cf
Hole Size: 8.34"
Top Job: No
Rtns to Sfc: yes
TTOC: Sfc
- - -

Liner Cmt Vol.: 168 cf
Hole Size: 6.125"
Top Job: no
Rtns to Sfc :no
TTOC: 7253'
- - -
Top of Formation:
UBA: N/A
BLW: N/A

Volume Behind Pipe:
1.3 Yield Assumed
Theoretical Calculations (TTOC)

OCCIDENTAL OF ELK HILLS INC

321H-3G

Event: RECOMPLETE
Event End: 12/1/2006 00:00
Sec. Reason:

Ground Level: 962.0ft
Datum: ORIGINAL KB @ 979.00ft (default)
API No.: 0402979893

Wellbore: ORIGINAL HOLE
PBMD: 6,415.0ft
Btm TMD: 7,640.0ft
Spud Date: 7/15/1987 00:00
BH Coord X: 6,146,431.00uss ft
BH Coord Y: 2,286,523.00uss ft

Casing Shoes (ft)	Schematic (12/1/2006)	Openings Top/Btm/Type/Status

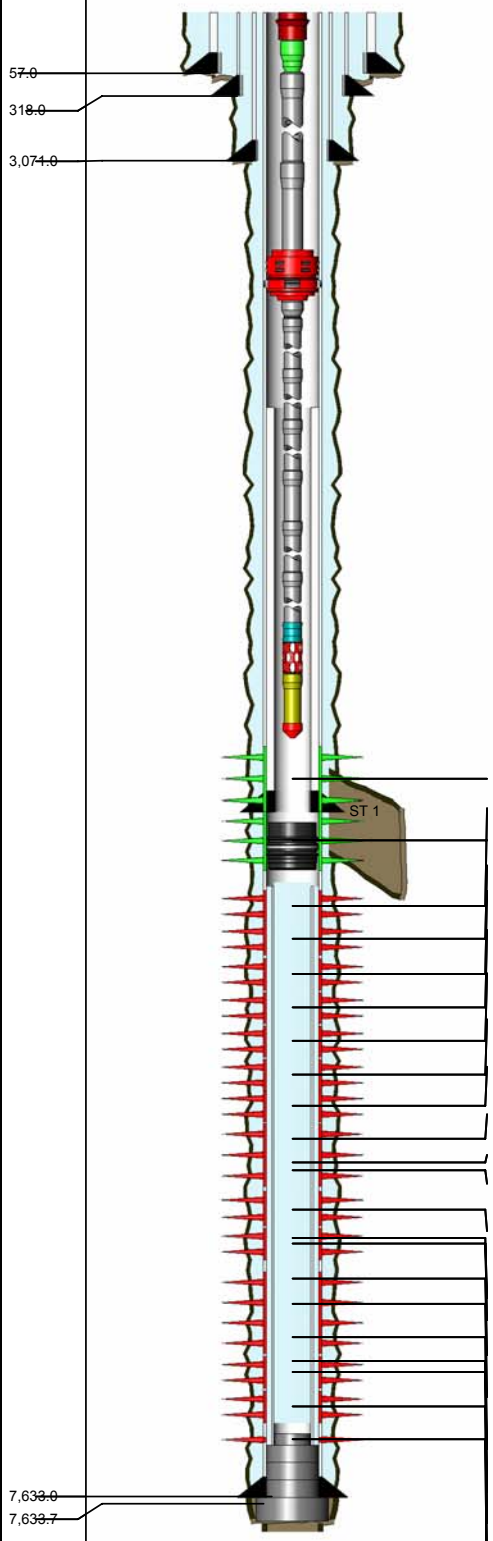

6,340.0ft, 6,399.0ft, PERFORATED, OPEN
6,765.0ft, 6,805.0ft, PERFORATED, ABANDONED
6,399.0ft, 6,420.0ft, PERFORATED, OPEN
6,828.0ft, 6,848.0ft, PERFORATED, ABANDONED
6,907.0ft, 6,957.0ft, PERFORATED, ABANDONED
6,987.0ft, 7,042.0ft, PERFORATED, ABANDONED
7,066.0ft, 7,084.0ft, PERFORATED, ABANDONED
7,110.0ft, 7,135.0ft, PERFORATED, ABANDONED
7,135.0ft, 7,165.0ft, PERFORATED, ABANDONED
7,180.0ft, 7,190.0ft, PERFORATED, ABANDONED
7,185.0ft, 7,232.0ft, PERFORATED, ABANDONED
7,190.0ft, 7,230.0ft, PERFORATED, ABANDONED
7,276.0ft, 7,286.0ft, PERFORATED, ABANDONED
7,270.0ft, 7,333.0ft, PERFORATED, ABANDONED
7,290.0ft, 7,308.0ft, PERFORATED, ABANDONED
7,320.0ft, 7,335.0ft, PERFORATED, ABANDONED
7,349.0ft, 7,356.0ft, PERFORATED, ABANDONED
7,364.0ft, 7,369.0ft, PERFORATED, ABANDONED
7,353.0ft, 7,404.0ft, PERFORATED, ABANDONED
7,384.0ft, 7,387.0ft, PERFORATED, ABANDONED
7,400.0ft, 7,405.0ft, PERFORATED, ABANDONED
7,458.0ft, 7,476.0ft, PERFORATED, ABANDONED

ROD STRING Report Date: 12/1/2006 00:00

Component	Top MD (ft)	Btm MD (ft)
POLROD	0.0	30.0
PNYROD	30.0	52.0
ROD	52.0	2,602.0
ROD	2,602.0	6,292.0
RSTBAR	6,292.0	6,296.0
INSPMP	6,296.0	6,312.0

TUBING STRING Report Date: 11/30/2006 00:00

Component	Top MD (ft)	Btm MD (ft)
TH-DBB	17.0	17.6
FATNIP	17.6	18.3
CAS	18.3	6,153.5
AC	6,153.5	6,155.8
XO	6,155.8	6,156.9
CAS	6,156.9	6,312.0
STNIP	6,312.0	6,313.1
PERFJT	6,313.1	6,317.1
PUPJNT	6,317.1	6,327.1
BULPLG	6,327.1	6,327.7

PLUG BACK Report Date: 9/14/2000 00:00

Component	Top MD (ft)	Btm MD (ft)
BP-DR	6,415.0	6,416.5

PLUG BACK Report Date: 9/9/1998 00:00

Component	Top MD (ft)	Btm MD (ft)
CEMENT	7,445.0	7,486.0

PLUG BACK Report Date: 9/8/1998 00:00

Component	Top MD (ft)	Btm MD (ft)
CEMENT	7,486.0	7,488.0

PLUG BACK Report Date: 9/7/1998 00:00

Component	Top MD (ft)	Btm MD (ft)
CEMENT	7,488.0	7,524.0

PLUG BACK Report Date: 9/24/1987 00:00

Component	Top MD (ft)	Btm MD (ft)
CEMENT	7,524.0	7,633.0

PLUG BACK Report Date: 8/21/1987 00:00

Component	Top MD (ft)	Btm MD (ft)
CEMENT	7,633.0	7,640.0

CONDUCTOR CASING Report Date: 7/15/1987 00:00

em	OD (in)	Grade	Wt. (ppf)	TopMD (ft)	BtmMD (ft)
ASING JOINT(S)	20.000			17.0	57.0

SURFACE CASING Report Date: 8/1/1987 00:00

em	OD (in)	Grade	Wt. (ppf)	TopMD (ft)	BtmMD (ft)
ASING JOINT(S)	13.375	H-40	48.00	17.0	318.0

INTERMEDIATE CASING Report Date: 8/7/1987 00:00

em	OD (in)	Grade	Wt. (ppf)	TopMD (ft)	BtmMD (ft)
ASING JOINT(S)	9.625	K-55	40.00	17.0	3,071.0

PRODUCTION CASING Report Date: 8/21/1987 00:00

em	OD (in)	Grade	Wt. (ppf)	TopMD (ft)	BtmMD (ft)
ASING JOINT(S)	7.000	N-80	26.00	17.0	54.3
ASING JOINT(S)	7.000	K-55	23.00	54.3	5,130.2
ASING JOINT(S)	7.000	K-55	26.00	5,130.2	7,118.0
ASING JOINT(S)	7.000	N-80	26.00	7,118.0	7,633.0

INNER LINER Report Date: 9/8/1998 00:00

em	OD (in)	Grade	Wt. (ppf)	TopMD (ft)	BtmMD (ft)
ASING JOINT(S)	5.000			6,693.0	7,633.0

LINER Report Date: 10/24/2000 00:00

em	OD (in)	Grade	Wt. (ppf)	TopMD (ft)	BtmMD (ft)
NER HANGER PACKER	6.276			6,252.0	6,258.3
ROSSOVER	6.276	N-80	15.00	6,258.3	6,259.4
ASING JOINT(S)	5.000	N-80	15.00	6,259.4	6,353.4
ROSSOVER	5.000	N-80	9.30	6,353.4	6,354.2
ASING JOINT(S)	3.500	N-80	9.30	6,354.2	6,730.4
UP JOINT	3.500	N-80	9.30	6,730.4	6,736.2
CP	6.125			6,736.2	6,746.8
UP JOINT	3.500	N-80	9.30	6,746.8	6,750.3
ASING JOINT(S)	3.500	N-80	9.30	6,750.3	6,781.6
UP JOINT	3.500	N-80	9.30	6,781.6	6,787.4
CP	6.125			6,787.4	6,798.1
UP JOINT	3.500	N-80	9.30	6,798.1	6,801.7
ASING JOINT(S)	3.500	N-80	9.30	6,801.7	6,833.0
ERFORATED JOINT(S)	3.500	N-80	9.30	6,833.0	8,336.8
UIDE SHOE	3.500	N-80	9.30	8,336.8	8,351.9

Well: 321H-3G S/T/R: 3G/31S/24E

CASING CEMENT DETAIL
- - -
Sfc Csg. Cmt Vol.: 400 cf
Hole Size: 17.5"
Top Job: No
Rtns to Sfc: 20 cf
TOC: Sfc
- - -

Interm Csg. Cmt Vol.: 1330 cf
Hole Size: 12.25"
Top Job: No
Rtns to Sfc: 120 cf
TOC: Sfc
- - -

Prod. Csg. Cmt Vol.: 1300 cf
Hole Size: 8.75"
Top Job: No
Rtns to Sfc: No
TTOC: Sfc

Liner Cmt Vol.:
Hole Size:
Top Job:
Rtns to Sfc:
TOC:
- - -
Top of Formation:
UBA: N/A
BLW: N/A

Volume Behind Pipe:
1.3 Yield Assumed
Theoretical Calculations (TTOC)

OCCIDENTAL OF ELK HILLS INC

321H-3G

Event: RECOMPLETE
Event End: 12/1/2006 00:00
Sec. Reason:

Ground Level: 962.0ft
Datum: ORIGINAL KB @ 979.00ft (default)
API No.: 0402979893

Wellbore: ST 1
PBMD: 8,352.0ft
Btm TMD: 8,352.0ft
Spud Date: 7/15/1987 00:00
BH Coord X: 6,146,696.71uss ft
BH Coord Y: 2,286,348.43uss ft

Casing Shoes (ft) | Schematic (12/1/2006) | Openings Top/Btm/Type/Status

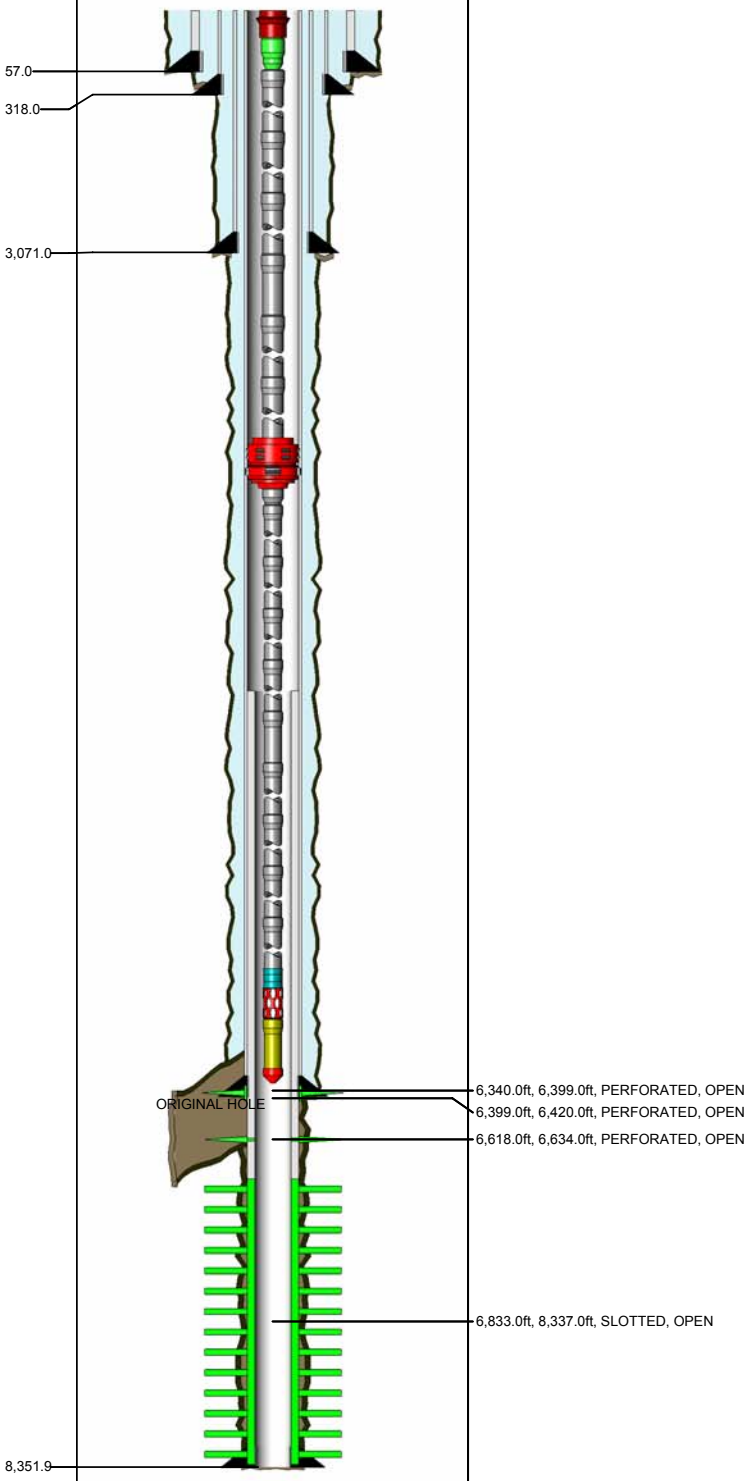

ROD STRING Report Date: 12/1/2006 00:00

Component	Top MD (ft)	Btm MD (ft)
POLROD	0.0	30.0
PNYROD	30.0	52.0
ROD	52.0	2,602.0
ROD	2,602.0	6,292.0
RSTBAR	6,292.0	6,296.0
INSPMP	6,296.0	6,312.0

TUBING STRING Report Date: 11/30/2006 00:00

Component	Top MD (ft)	Btm MD (ft)
TH-DBB	17.0	17.6
FATNIP	17.6	18.3
CAS	18.3	6,153.5
AC	6,153.5	6,155.8
XO	6,155.8	6,156.9
CAS	6,156.9	6,312.0
STNIP	6,312.0	6,313.1
PERFJT	6,313.1	6,317.1
PUPJNT	6,317.1	6,327.1
BULPLG	6,327.1	6,327.7

CONDUCTOR CASING Report Date: 7/15/1987 00:00

Item	OD (in)	Grade	Wt. (ppf)	TopMD (ft)	BtmMD (ft)
CASING JOINT(S)	20.000			17.0	57.0

SURFACE CASING Report Date: 8/1/1987 00:00

Item	OD (in)	Grade	Wt. (ppf)	TopMD (ft)	BtmMD (ft)
CASING JOINT(S)	13.375	H-40	48.00	17.0	318.0

INTERMEDIATE CASING Report Date: 8/7/1987 00:00

Item	OD (in)	Grade	Wt. (ppf)	TopMD (ft)	BtmMD (ft)
CASING JOINT(S)	9.625	K-55	40.00	17.0	3,071.0

PRODUCTION CASING Report Date: 8/21/1987 00:00

Item	OD (in)	Grade	Wt. (ppf)	TopMD (ft)	BtmMD (ft)
CASING JOINT(S)	7.000	N-80	26.00	17.0	54.3
CASING JOINT(S)	7.000	K-55	23.00	54.3	5,130.2
CASING JOINT(S)	7.000	K-55	26.00	5,130.2	7,118.0
CASING JOINT(S)	7.000	N-80	26.00	7,118.0	7,633.0

LINER Report Date: 10/24/2000 00:00

Item	OD (in)	Grade	Wt. (ppf)	TopMD (ft)	BtmMD (ft)
LINER HANGER PACKER	6.276			6,252.0	6,258.3
CROSSOVER	6.276	N-80	15.00	6,258.3	6,259.4
CASING JOINT(S)	5.000	N-80	15.00	6,259.4	6,353.4
CROSSOVER	5.000	N-80	9.30	6,353.4	6,354.2
CASING JOINT(S)	3.500	N-80	9.30	6,354.2	6,730.4
PUP JOINT	3.500	N-80	9.30	6,730.4	6,736.2
ECP	6.125			6,736.2	6,746.8
PUP JOINT	3.500	N-80	9.30	6,746.8	6,750.3
CASING JOINT(S)	3.500	N-80	9.30	6,750.3	6,781.6
PUP JOINT	3.500	N-80	9.30	6,781.6	6,787.4
ECP	6.125			6,787.4	6,798.1
PUP JOINT	3.500	N-80	9.30	6,798.1	6,801.7
CASING JOINT(S)	3.500	N-80	9.30	6,801.7	6,833.0
PERFORATED JOINT(S)	3.500	N-80	9.30	6,833.0	8,336.8
GUIDE SHOE	3.500	N-80	9.30	8,336.8	8,351.9

Well: 321H-3G-RD1 S/T/R: 3G/31S/24E

CASING CEMENT DETAIL
- - -
Sfc Csg. Cmt Vol.: 400 cf
Hole Size: 17.5"
Top Job: No
Rtns to Sfc: 20 cf
TOC: Sfc
- - -

Interm Csg. Cmt Vol.: 1330 cf
Hole Size: 12.25"
Top Job: No
Rtns to Sfc: 120 cf
TOC: Sfc
- - -

Prod. Csg. Cmt Vol.: 1300 cf
Hole Size: 8.75"
Top Job: No
Rtns to Sfc: No
TTOC: Sfc

Liner Cmt Vol.: none - slotted
Hole Size: 6.125"
Top Job:
Rtns to Sfc:
TOC:
- - -
Top of Formation:
UBA: N/A
BLW: N/A

Volume Behind Pipe:
1.3 Yield Assumed
Theoretical Calculations (TTOC)

OCCIDENTAL OF ELK HILLS INC

321X-3G

Event: WELL MAINT - RIGLESS
Event End: 5/25/2206 00:00
Sec. Reason:

Water Depth: 1,004.5ft
Datum: ORIGINAL KB @ 1,024.50ft (default)
API No.: 0403029252

Wellbore: ORIGINAL HOLE
PBMD: 7,094.0ft
Btm TMD: 7,600.0ft
Spud Date: 1/29/2006 16:30
BH Coord X: 6,146,284.78uss ft
BH Coord Y: 2,286,710.02uss ft

Casing Shoes (ft) | Schematic (2/1/2009) | Openings Top/Btm/Type/Status

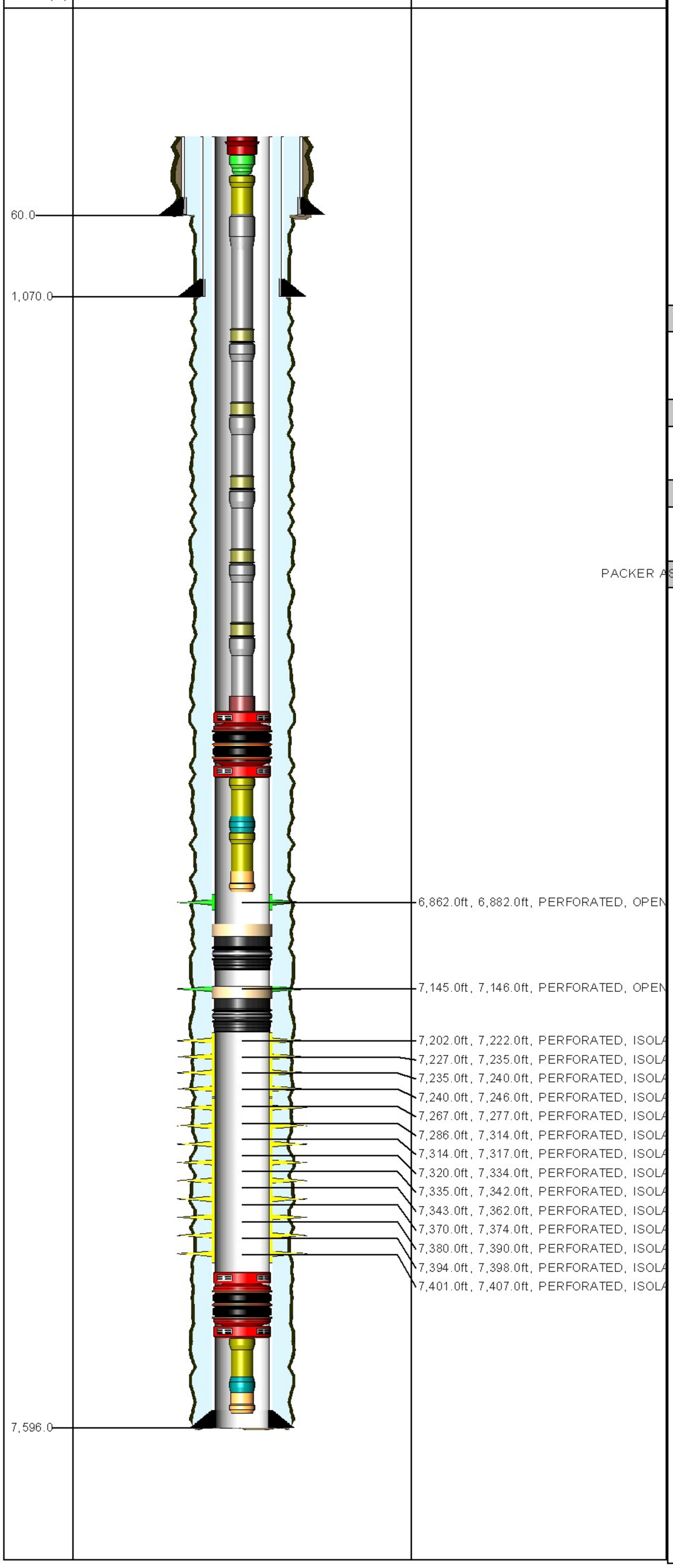

TUBING STRING Report Date: 2/15/2008 00:00

Component	Top MD (ft)	Btm MD (ft)
TH-DBB	20.0	20.7
FATNIP	20.7	21.4
PUPJNT	21.4	40.0
CAS	40.0	2,294.3
GLM	2,294.3	2,302.9
CAS	2,302.9	4,098.4
GLM	4,098.4	4,106.9
CAS	4,106.9	5,389.4
GLM	5,389.4	5,398.0
CAS	5,398.0	6,257.1
GLM	6,257.1	6,265.7
CAS	6,265.7	6,754.9
GLM	6,754.9	6,763.6
CAS	6,763.6	6,792.4
ON-OFF	6,792.4	6,794.6
PKR	6,794.6	6,801.8
PUPJNT	6,801.8	6,811.9
PRONIP	6,811.9	6,813.3
PUPJNT	6,813.3	6,823.5
WLREG	6,823.5	6,824.0

PLUG BACK Report Date: 2/12/2008 00:00

Component	Top MD (ft)	Btm MD (ft)
SAND	7,084.0	7,094.0
BP-RET	7,094.0	7,096.5

PLUG BACK Report Date: 7/20/2007 00:00

Component	Top MD (ft)	Btm MD (ft)
SAND	7,136.0	7,195.0

PLUG BACK Report Date: 10/30/2006 00:00

Component	Top MD (ft)	Btm MD (ft)
BP-RET	7,195.0	7,198.5

PACKER ASSEMBLY (RETRIEVABLE) Report Date: 11/19/2006 00:00

Component	Top MD (ft)	Btm MD (ft)
PKR	7,441.0	7,445.0
PUPJNT	7,445.0	7,455.2
PRONIP	7,455.2	7,456.6
WLREG	7,456.6	7,457.0

CONDUCTOR CASING Report Date: 1/26/2006 00:00

Item	OD (in)	Grade	Wt. (ppf)	TopMD (ft)	BtmMD (ft)
CASING JOINT(S)	14.000			20.0	60.0

SURFACE CASING Report Date: 1/31/2006 00:00

Item	OD (in)	Grade	Wt. (ppf)	TopMD (ft)	BtmMD (ft)
CASING JOINT(S)	9.625	K-55	36.00	20.0	1,014.5
	9.625			1,014.5	1,014.5
CASING JOINT(S)	9.625	K-55	36.00	1,014.5	1,068.9
GUIDE SHOE	9.625	K-55		1,068.9	1,070.0

PRODUCTION CASING Report Date: 2/12/2006 00:00

Item	OD (in)	Grade	Wt. (ppf)	TopMD (ft)	BtmMD (ft)
CASING JOINT(S)	7.000	N-80	26.00	20.0	7,184.0
FLAG JOINT	7.000	N-80	26.00	7,184.0	7,196.6
CASING JOINT(S)	7.000	N-80	26.00	7,196.6	7,504.0
FLOAT COLLAR	7.000	N-80	26.00	7,504.0	7,505.7
CASING JOINT(S)	7.000	N-80	26.00	7,505.7	7,594.3
FLOAT SHOE	7.000	N-80	26.00	7,594.3	7,596.0

Well: 321X-3G S/T/R: 3G/31S/24E

CASING CEMENT DETAIL
- - -
Sfc Csg. Cmt Vol.: 717 cf / 57 cf
Hole Size: 13.5"
Top Job: No / Yes
Rtns to Sfc: 12 cf
TOC: Sfc
- - -

Interm Csg. Cmt Vol.:
Hole Size:
Top Job:
Rtns to Sfc:
TOC:
- - -

Prod. Csg. Cmt Vol.: 1502 cf
Hole Size: 9.875"
Top Job: No
Rtns to Sfc:
TTOC: Sfc

Liner Cmt Vol.:
Hole Size:
Top Job:
Rtns to Sfc:
TTOC: 1920'
- - -
Top of Formation:
UBA: 6856'
BLW: 7443'

Volume Behind Pipe:
1.3 Yield Assumed
Theoretical Calculations (TTOC)

OCCIDENTAL OF ELK HILLS INC

322-2G

Event: WELL MAINT - RIG
Event End: 5/15/2009 00:00
Sec. Reason: SPLIT
End Status: FINISHED - SUCCESS
Well Classification: DEVELOPMENT

Ground Level: 945.0ft
Datum: ORIGINAL KB @ 954.00ft (default)
API No.: 0402927981

Wellbore: ST1
PBMD: 6,937.0ft
Btm TMD: 7,850.0ft
Spud Date: 2/1/1951 00:00
BH Coord X: 6,151,730.20uss ft
BH Coord Y: 2,285,612.93uss ft

Casing Shoes (ft)

39.0
212.0
3,353.0
7,850.0

Schematic (6/1/2009)

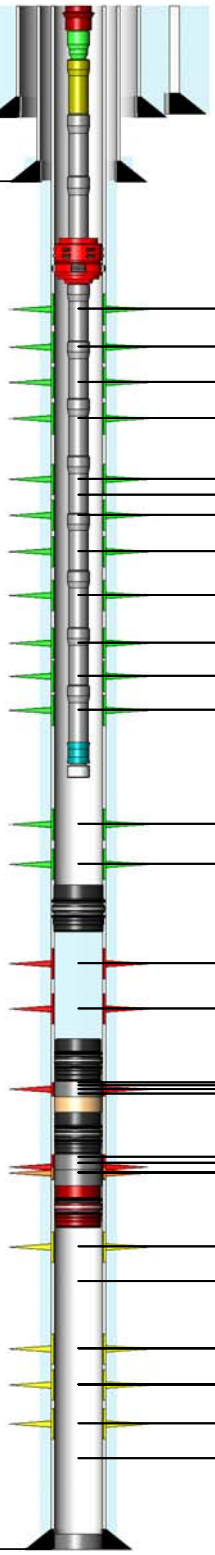

Openings Top/Btm/Type/Status

6,154.0ft, 6,162.0ft, PERFORATED, OPEN
6,199.0ft, 6,206.0ft, PERFORATED, OPEN
6,230.0ft, 6,238.0ft, PERFORATED, OPEN
6,266.0ft, 6,274.0ft, PERFORATED, OPEN
6,418.0ft, 6,428.0ft, PERFORATED, OPEN
6,430.0ft, 6,431.0ft, WSO PERFS, OPEN
6,454.0ft, 6,464.0ft, PERFORATED, OPEN
6,490.0ft, 6,496.0ft, PERFORATED, OPEN
6,554.0ft, 6,586.0ft, PERFORATED, OPEN
6,647.0ft, 6,659.0ft, PERFORATED, OPEN
6,667.0ft, 6,684.0ft, PERFORATED, OPEN
6,692.0ft, 6,705.0ft, PERFORATED, OPEN
6,880.0ft, 6,888.0ft, PERFORATED, OPEN
6,920.0ft, 6,932.0ft, PERFORATED, OPEN
6,990.0ft, 7,010.0ft, PERFORATED, ABANDONE
7,045.0ft, 7,055.0ft, PERFORATED, ABANDONE
7,093.0ft, 7,106.0ft, PERFORATED, ABANDONE
7,116.0ft, 7,136.0ft, PERFORATED, ABANDONE
7,149.0ft, 7,174.0ft, PERFORATED, ABANDONE
7,184.0ft, 7,220.0ft, PERFORATED, ABANDONE
7,243.0ft, 7,350.0ft, PERFORATED, ABANDONE
7,375.0ft, 7,470.0ft, PERFORATED, ABANDONE
7,375.1ft, 7,470.1ft, PERFORATED, ABANDONE
7,495.0ft, 7,565.0ft, PERFORATED, ABANDONE
7,495.1ft, 7,565.1ft, PERFORATED, SQUEEZED
7,595.0ft, 7,635.0ft, PERFORATED, ISOLATED
7,595.0ft, 7,645.0ft, PERFORATED, ISOLATED
7,655.0ft, 7,700.0ft, PERFORATED, ISOLATED
7,655.1ft, 7,700.1ft, PERFORATED, ISOLATED
7,720.0ft, 7,780.0ft, PERFORATED, ISOLATED
7,720.1ft, 7,780.1ft, PERFORATED, ISOLATED
7,795.0ft, 7,831.0ft, PERFORATED, ISOLATED
7,795.0ft, 7,835.0ft, PERFORATED, ISOLATED

ROD STRING — Report Date: 5/11/2009 00:00

Component	Top MD (ft)	Btm MD (ft)
POLROD	0.0	36.0
PNYROD	36.0	44.0
R-4PER	44.0	1,964.0
R-4PER	1,964.0	4,034.0
ROD	4,034.0	5,234.0
R-4PER	5,234.0	6,734.0
RSTBAR	6,734.0	6,738.0
INSPMP	6,738.0	6,762.0

TUBING STRING — Report Date: 5/12/2009 00:00

Component	Top MD (ft)	Btm MD (ft)
TH-DBB	9.0	9.6
FATNIP	9.6	10.8
PUPJNT	10.8	27.3
TBGJNT	27.3	6,097.6
AC	6,097.6	6,100.3
TBGJNT	6,100.3	6,728.0
STNIP	6,728.0	6,729.1
PMPJKT	6,729.1	6,758.0

PLUG BACK — Report Date: 1/16/2006 00:00

Component	Top MD (ft)	Btm MD (ft)
BP-DR	6,937.0	6,939.0

PLUG BACK — Report Date: 8/3/2002 00:00

Component	Top MD (ft)	Btm MD (ft)
CR-PRM	7,080.0	7,082.2
CEMENT	7,082.2	7,225.0
FILL	7,225.0	7,230.0

PLUG BACK — Report Date: 11/2/1994 00:00

Component	Top MD (ft)	Btm MD (ft)
CR-PRM	7,230.0	7,232.0
CEMENT	7,232.0	7,559.0

PLUG BACK — Report Date: 6/1/1990 00:00

Component	Top MD (ft)	Btm MD (ft)
CEMENT	7,559.0	7,569.0
BRP	7,569.0	7,571.0

PLUG BACK — Report Date: 5/20/1951 00:00

Component	Top MD (ft)	Btm MD (ft)
CEMENT	7,840.0	7,850.0

CONDUCTOR CASING — Report Date: 2/1/1951 00:00

Item	OD (in)	Grade	Wt. (ppf)	TopMD (ft)	BtmMD (ft)
CASING JOINT(S)	26.000			9.0	39.0

SURFACE CASING — Report Date: 4/12/1951 00:00

Item	OD (in)	Grade	Wt. (ppf)	TopMD (ft)	BtmMD (ft)
CASING JOINT(S)	16.000	H-40	65.00	9.0	212.0

INTERMEDIATE CASING — Report Date: 4/18/1951 00:00

Item	OD (in)	Grade	Wt. (ppf)	TopMD (ft)	BtmMD (ft)
CASING JOINT(S)	10.750	J-55	45.50	9.0	54.0
CASING JOINT(S)	10.750	J-55	40.50	54.0	1,965.0
CASING JOINT(S)	10.750	J-55	45.50	1,965.0	3,353.0

PRODUCTION CASING — Report Date: 5/17/1951 00:00

Item	OD (in)	Grade	Wt. (ppf)	TopMD (ft)	BtmMD (ft)
CASING JOINT(S)	7.000	N-80	26.00	9.0	82.0
CASING JOINT(S)	7.000	N-80	23.00	82.0	5,839.0
CASING JOINT(S)	7.000	N-80	26.00	5,839.0	7,850.0

Well: 322-2G S/T/R: 2G/31S/24E

CASING CEMENT DETAIL
- - -
Sfc Csg. Cmt Vol.: 450 sks
Hole Size: 22'
Top Job: No
Rtns to Sfc: not specified
TTOC: sfc
- - -

Interm Csg. Cmt Vol.: 500 sks
Hole Size: 15'
Top Job: No
Rtns to Sfc: no
TOC: 2120' per thermometric survey
- - -

Prod. Csg. Cmt Vol.: 600 sks
Hole Size: 9.75'
Top Job: no
Rtns to Sfc: no
TOC: 3300' per thermometric survey
- - -

Liner Cmt Vol.:
Hole Size:
Top Job:
Rtns to Sfc :
TTOC:
- - -
Top of Formation:
UBA: 7243'
BLW:7833'

Volume Behind Pipe:
1.3 Yield Assumed
Theoretical Calculations (TTOC)

Wellbore: ST1

Event: WELL MAINT - RIGLESS
Event End: 7/25/2008 00:00
Sec. Reason:
End Status: FINISHED - SUCCESS
Well Classification: INJECTION

OCCIDENTAL OF ELK HILLS INC

322-34S

Ground Level: 804.0ft
Datum: ORIGINAL KB @ 824.00ft (HES CTU)(default)
API No.: 0402960248

PBMD: 7,912.0ft
Btm TMD: 8,000.0ft
Spud Date: 12/18/1979 00:00
BH Coord X: 6,146,497.07uss ft
BH Coord Y: 2,290,601.72uss ft

Casing Shoes (ft)	Schematic (8/1/2008)	Openings Top/Btm/Type/Status
64.0		
315.0		
3,308.1		
		7,520.0ft, 7,532.0ft, PERFORATED, OPEN
		7,547.0ft, 7,570.0ft, PERFORATED, OPEN
		7,600.0ft, 7,640.0ft, PERFORATED, OPEN
		7,660.0ft, 7,690.0ft, PERFORATED, OPEN
		7,715.0ft, 7,740.0ft, PERFORATED, OPEN
		7,765.0ft, 7,850.0ft, PERFORATED, OPEN
7,990.0		

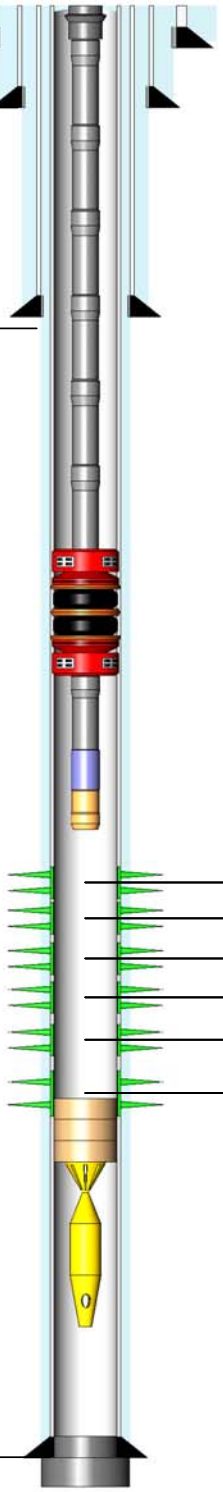

TUBING STRING — Report Date: 4/9/1988 00:00

Component	Top MD (ft)	Btm MD (ft)
TH-SGL	20.0	20.6
TBGJNT	20.6	7,358.1
PKR-S	7,358.1	7,364.4
TBGJNT	7,364.4	7,368.5
NOGO-O	7,368.5	7,369.6
WLREG	7,369.6	7,370.2

PLUG BACK — Report Date: 5/13/2005 00:00

Component	Top MD (ft)	Btm MD (ft)
FILL	7,813.0	7,857.0

PLUG BACK — Report Date: 4/21/2004 00:00

Component	Top MD (ft)	Btm MD (ft)
FILL	7,857.0	7,864.0

PLUG BACK — Report Date: 5/23/2003 00:00

Component	Top MD (ft)	Btm MD (ft)
FILL	7,864.0	7,912.0

PLUG BACK — Report Date: 6/2/1983 00:00

Component	Top MD (ft)	Btm MD (ft)
JUNK	7,912.0	7,919.0

PLUG BACK — Report Date: 9/11/1980 00:00

Component	Top MD (ft)	Btm MD (ft)
CEMENT	7,945.0	7,990.0

PLUG BACK — Report Date: 2/8/1980 00:00

Component	Top MD (ft)	Btm MD (ft)
CEMENT	7,990.0	8,000.0

CONDUCTOR CASING — Report Date: 12/18/1979 00:00

Item	OD (in)	Grade	Wt. (ppf)	TopMD (ft)	BtmMD (ft)
CASING JOINT(S)	20.000			20.0	61.0

SURFACE CASING — Report Date: 1/6/1980 00:00

Item	OD (in)	Grade	Wt. (ppf)	TopMD (ft)	BtmMD (ft)
CASING JOINT(S)	13.375	K-55	54.00	20.0	313.9
GUIDE SHOE	13.375			313.9	315.0

INTERMEDIATE CASING — Report Date: 1/12/1980 00:00

Item	OD (in)	Grade	Wt. (ppf)	TopMD (ft)	BtmMD (ft)
CASING JOINT(S)	9.625	K-55	40.00	20.0	3,305.9
GUIDE SHOE	9.625			3,305.9	3,307.0

PRODUCTION CASING — Report Date: 2/8/1980 00:00

Item	OD (in)	Grade	Wt. (ppf)	TopMD (ft)	BtmMD (ft)
CASING JOINT(S)	7.000	N-80	26.00	20.0	81.1
CASING JOINT(S)	7.000	N-80	23.00	81.1	6,751.3
CASING JOINT(S)	7.000	N-80	26.00	6,751.3	6,914.9
FLAG JOINT	7.000	N-80	26.00	6,914.9	6,934.3
CASING JOINT(S)	7.000	N-80	26.00	6,934.3	7,945.2
FLOAT COLLAR	7.000			7,945.2	7,946.5
CASING JOINT(S)	7.000	N-80	26.00	7,946.5	7,987.8
FLOAT SHOE	7.000			7,987.8	7,990.0

Well: 322-34S S/T/R: 34S/30S/24E

CASING CEMENT DETAIL
- - -
Sfc Csg. Cmt Vol.: 500 cf
Hole Size: 17.5"
Top Job: no
Rtns to Sfc: 62 cf
TOC: sfc
- - -

Interm Csg. Cmt Vol.: 2062 cf
Hole Size: 12.25"
Top Job: no
Rtns to Sfc: 50 cf
TOC: sfc
- - -

Prod. Csg. Cmt Vol.: 1700 cf
Hole Size: 8.75"
Top Job: no
Rtns to Sfc: no
TTOC: sfc
- - -

Liner Cmt Vol.:
Hole Size:
Top Job:
Rtns to Sfc :
TTOC:
- - -
Top of Formation:
UBA: 7521'
BLW: 7876'

Volume Behind Pipe:
1.3 Yield Assumed
Theoretical Calculations (TTOC)

Event: WELL MAINT - RIGLESS
Event End: 9/27/2006 00:00
Sec. Reason:
End Status: FINISHED - SUCCESS
Well Classification: INJECTION

OCCIDENTAL OF ELK HILLS INC

322-35S

Ground Level: 658.0ft
Datum: ORIGINAL KB @ 670.00ft (HES CTU)(default)
API No.: 0402957505

Wellbore: ST1
PBMD: 7,894.0ft
Btm TMD: 9,658.0ft
Spud Date: 3/17/1978 00:00
BH Coord X: 6,151,640.90uss ft
BH Coord Y: 2,290,378.60uss ft

Casing Shoes (ft)	Schematic (10/1/2006)	Openings Top/Btm/Type/Status

52.0
511.0
3,511.0
9,650.0

7,295.0ft, 7,340.0ft, PERFORATED, OPEN
7,355.0ft, 7,410.0ft, PERFORATED, OPEN
7,432.0ft, 7,472.0ft, PERFORATED, OPEN
7,500.0ft, 7,575.0ft, PERFORATED, OPEN
7,615.0ft, 7,685.0ft, PERFORATED, OPEN
7,715.0ft, 7,790.0ft, PERFORATED, OPEN
9,400.0ft, 9,420.0ft, PERFORATED, ISOLAT
9,469.0ft, 9,490.0ft, PERFORATED, SQUEE

TUBING STRING Report Date: 9/6/1986 00:00

Component	Top MD (ft)	Btm MD (ft)
TH-SGL	12.0	12.6
TBGJNT	12.6	22.9
TBGJNT	22.9	7,190.3
PKR-S	7,190.3	7,196.7
TBGJNT	7,196.7	7,200.6
NOGO-O	7,200.6	7,201.7
TBGJNT	7,201.7	7,205.8
WLREG	7,205.8	7,206.2

PLUG BACK Report Date: 12/22/2003 00:00

Component	Top MD (ft)	Btm MD (ft)
FILL	7,876.0	7,894.5

PLUG BACK Report Date: 3/14/1979 00:00

Component	Top MD (ft)	Btm MD (ft)
CEMENT	7,894.5	7,900.0
BP-DR	7,900.0	7,903.0

PLUG BACK Report Date: 12/7/1978 00:00

Component	Top MD (ft)	Btm MD (ft)
CR-PRM	9,426.0	9,429.0

PLUG BACK Report Date: 12/8/1978 00:00

Component	Top MD (ft)	Btm MD (ft)
CEMENT	9,429.0	9,564.0

PLUG BACK Report Date: 6/13/1978 00:00

Component	Top MD (ft)	Btm MD (ft)
CEMENT	9,564.0	9,650.0

CONDUCTOR CASING Report Date: 3/17/1978 00:00

Item	OD (in)	Grade	Wt. (ppf)	TopMD (ft)	BtmMD (ft)
CASING JOINT(S)	20.000			12.0	52.0

SURFACE CASING Report Date: 4/14/1978 00:00

Item	OD (in)	Grade	Wt. (ppf)	TopMD (ft)	BtmMD (ft)
CASING JOINT(S)	13.375	K-55	54.50	12.0	509.0
GUIDE SHOE	13.375			509.0	510.0

INTERMEDIATE CASING Report Date: 4/20/1978 00:00

Item	OD (in)	Grade	Wt. (ppf)	TopMD (ft)	BtmMD (ft)
CASING JOINT(S)	9.625	N-80	40.00	12.0	3,510.0
GUIDE SHOE	9.625			3,510.0	3,511.0

PRODUCTION CASING Report Date: 6/11/1978 00:00

Item	OD (in)	Grade	Wt. (ppf)	TopMD (ft)	BtmMD (ft)
CASING JOINT(S)	7.000	N-80	29.00	12.0	81.6
CASING JOINT(S)	7.000	N-80	23.00	81.6	4,636.3
CASING JOINT(S)	7.000	N-80	26.00	4,636.3	6,705.8
FLAG JOINT	7.000	N-80	26.00	6,705.8	6,726.8
CASING JOINT(S)	7.000	N-80	26.00	6,726.8	7,661.2
CASING JOINT(S)	7.000	N-80	29.00	7,661.2	9,567.1
FLOAT COLLAR	7.000	N-80	29.00	9,567.1	9,568.5
CASING JOINT(S)	7.000	N-80	29.00	9,568.5	9,647.8
FLOAT SHOE	7.000	N-80	29.00	9,647.8	9,650.0

Well: 322-35S S/T/R: 35S/30S/24E

CASING CEMENT DETAIL
- - -
Sfc Csg. Cmt Vol.: 561 c.f.
Hole Size: 17-1/2"
Top Job: No
Rtns to Sfc: 80 c.f.
TOC: sfc
- - -

Interm Csg. Cmt Vol.: 1600 c.f.
Hole Size: 12-1/4"
Top Job: No
Rtns to Sfc: No
TTOC: sfc
- - -

Prod. Csg. Cmt Vol.: 2600 c.f.
Hole Size: 8-3/4"
Top Job: No
Rtns to Sfc: No
TTOC: Sfc
- - -

Liner Cmt Vol.:
Hole Size:
Top Job:
Rtns to Sfc :
TTOC:
- - -
Top of Formation:
UBA: 7296 ft MD
BLW: 7840 ft MD

Volume Behind Pipe:
1.3 Yield Assumed
Theoretical Calculations (TTOC)

OCCIDENTAL OF ELK HILLS INC

322H-3G

Event: WELL MAINT - RIGLESS
Event End:
Sec. Reason:

Ground Level: 1,017.4ft
KB to Ground: 6,619.0ft
Datum: ORIGINAL KB @ 1,027.00ft (default)
API No.: 0402929019

Wellbore: ST 1
Top TMD: 6,619.0ft
PBMD: 7,150.0ft
Btm TMD: 7,813.0ft
Spud Date: 2/9/1951 00:00
BH Coord X: 6,145,759.94uss ft BH Coord Y: 2,286,016.57uss ft

Casing Shoes (ft)	Schematic (8/26/2009)	Openings Top/Btm/Type/Status

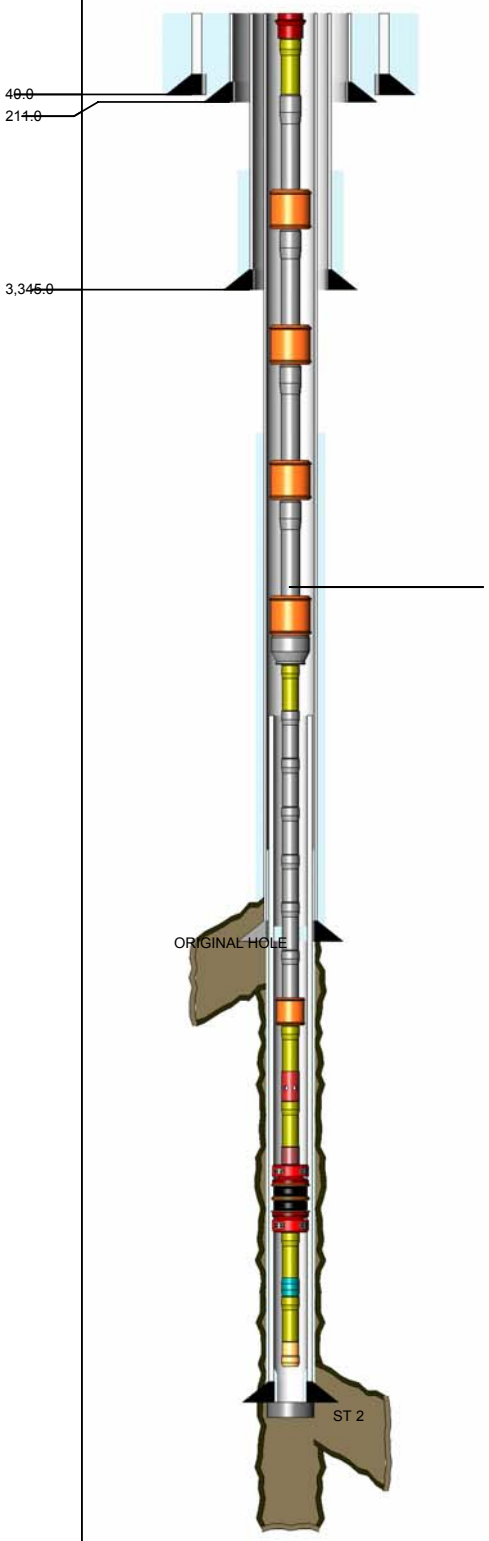

6,310.0ft, 6,311.0ft, WSO PERFS, SQUEEZED

TUBING STRING — Report Date: 8/10/2002 00:00

Component	Top MD (ft)	Btm MD (ft)
TH-DBB	9.6	10.5
PUPJNT	10.5	22.4
TBGJNT	22.4	2,195.8
GLM-V	2,195.8	2,204.3
TBGJNT	2,204.3	4,010.5
GLM-V	4,010.5	4,019.0
TBGJNT	4,019.0	5,390.8
GLM-V	5,390.8	5,399.2
TBGJNT	5,399.2	6,403.1
GLM-V	6,403.1	6,411.6
XO	6,411.6	6,412.2
PUPJNT	6,412.2	6,416.2
TBGJNT	6,416.2	7,074.0
GLM-V	7,074.0	7,080.7
PUPJNT	7,080.7	7,090.9
SS	7,090.9	7,094.7
PUPJNT	7,094.7	7,104.7
ON-OFF	7,104.7	7,106.2
PKR-S	7,106.2	7,109.8
PUPJNT	7,109.8	7,117.9
PNIP-O	7,117.9	7,118.9
PUPJNT	7,118.9	7,129.0
WLREG	7,129.0	7,129.4

PLUG BACK — Report Date: 12/12/2000 00:00

Component	Top MD (ft)	Btm MD (ft)
CEMENT	7,150.0	7,417.0

CONDUCTOR CASING — Report Date: 2/9/1951 00:00

Item Description	Btm MD(ft)
CASING JOINT(S) 26 in,	40.0

SURFACE CASING — Report Date: 4/18/1951 00:00

Item Description	Btm MD (ft)
CASING JOINT(S) 16 in, , H-40, 65	211.0

INTERMEDIATE CASING — Report Date: 4/24/1951 00:00

Item Description	Btm MD (ft)
CASING JOINT(S) 10.75 in, , J-55, 45.5	56.8
CASING JOINT(S) 10.75 in, , J-55, 40.5	1,966.5
CASING JOINT(S) 10.75 in, , J-55, 45.5	3,345.0

PRODUCTION CASING — Report Date: 5/14/1951 00:00

Item Description	Btm MD (ft)
CASING JOINT(S) 7 in, , N-80, 26	70.6
CASING JOINT(S) 7 in, , N-80, 23	5,857.5
CASING JOINT(S) 7 in, , N-80, 26	7,550.0

LINER — Report Date: 12/21/2000 00:00

Item Description	Btm MD (ft)
LINER HANGER PACKER 5.75 in,	6,467.8
LINER HANGER 6.276 in,	6,473.2
CROSSOVER 6.276 in,	6,477.5
CASING JOINT(S) 5 in, , N-80, 15	7,127.4
CROSSOVER 5 in,	7,128.1
CASING JOINT(S) 3.5 in, , N-80, 9.3	7,739.2
PUP JOINT 3.5 in, , N-80, 9.3	7,743.2
PACKOFF 4.5 in,	7,747.3
ECP 6.125 in,	7,758.0
FLOAT COLLAR 3.5 in,	7,759.2
PUP JOINT 3.5 in, , N-80, 9.3	7,761.0
SLOTTED LINER 3.5 in, , L-80, 9.3	8,491.9
GUIDE SHOE 3.5 in, , N-80, 9.3	8,492.0

Well: 322H-3G-RD1 S/T/R: 3G/31S/24E

CASING CEMENT DETAIL
- - -
Sfc Csg. Cmt Vol.: 470 sx
Hole Size: 22"
Top Job: No
Rtns to Sfc:
TTOC: Sfc
- - -

Interm Csg. Cmt Vol.: 500 sx
Hole Size: 15"
Top Job: No
Rtns to Sfc: No
TTOC: 2382'
- - -

Prod. Csg. Cmt Vol.: 500 sx
Hole Size: 9.75"
Top Job: No
Rtns to Sfc: No
TTOC: 5202'
- - -

Liner Cmt Vol.:
Hole Size:
Top Job:
Rtns to Sfc:
TOC:
- - -

Top of Formation:
UBA: 7025'
BLW: N/A

Volume Behind Pipe:
1.3 Yield Assumed
Theoretical Calculations (TTOC)

OCCIDENTAL OF ELK HILLS INC

322H-3G

Event: WELL MAINT - RIGLESS
Event End:
Sec. Reason:

Ground Level: 1,017.4ft
Datum: ORIGINAL KB @ 1,027.00ft (default)
API No.: 0402929019

Wellbore: ST 2
PBMD: 7,306.0ft
Btm TMD: 8,496.0ft
Spud Date: 2/9/1951 00:00
BH Coord X: 6,145,215.07uss ft
BH Coord Y: 2,286,121.77uss ft

Casing Shoes (ft) | Schematic (9/14/2009) | Openings Top/Btm/Type/Status

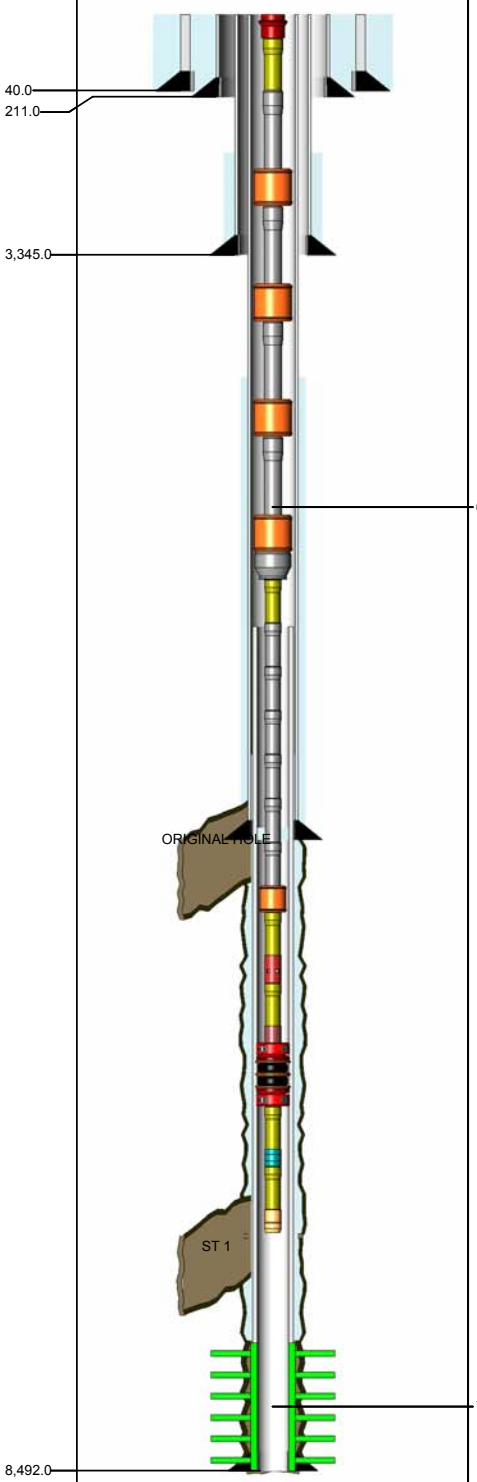

6,310.0ft, 6,311.0ft, WSO PERFS, SQUEEZED

7,761.0ft, 8,491.9ft, SLOTTED, OPEN

TUBING STRING Report Date: 8/10/2002 00:00

Component	Top MD (ft)	Btm MD (ft)
TH-DBB	9.6	10.5
PUPJNT	10.5	22.4
TBGJNT	22.4	2,195.8
GLM-V	2,195.8	2,204.3
TBGJNT	2,204.3	4,010.5
GLM-V	4,010.5	4,019.0
TBGJNT	4,019.0	5,390.8
GLM-V	5,390.8	5,399.2
TBGJNT	5,399.2	6,403.1
GLM-V	6,403.1	6,411.6
XO	6,411.6	6,412.2
PUPJNT	6,412.2	6,416.2
TBGJNT	6,416.2	7,074.0
GLM-V	7,074.0	7,080.7
PUPJNT	7,080.7	7,090.9
SS	7,090.9	7,094.7
PUPJNT	7,094.7	7,104.7
ON-OFF	7,104.7	7,106.2
PKR-S	7,106.2	7,109.8
PUPJNT	7,109.8	7,117.9
PNIP-O	7,117.9	7,118.9
PUPJNT	7,118.9	7,129.0
WLREG	7,129.0	7,129.4

CONDUCTOR CASING Report Date: 2/9/1951 00:00

Item	OD (in)	Grade	Wt. (ppf)	TopMD (ft)	BtmMD (ft)
CASING JOINT(S)	26.000			9.6	40.0

SURFACE CASING Report Date: 4/18/1951 00:00

Item	OD (in)	Grade	Wt. (ppf)	TopMD (ft)	BtmMD (ft)
CASING JOINT(S)	16.000	H-40	65.00	9.6	211.0

INTERMEDIATE CASING Report Date: 4/24/1951 00:00

Item	OD (in)	Grade	Wt. (ppf)	TopMD (ft)	BtmMD (ft)
CASING JOINT(S)	10.750	J-55	45.50	9.6	56.8
CASING JOINT(S)	10.750	J-55	40.50	56.8	1,966.5
CASING JOINT(S)	10.750	J-55	45.50	1,966.5	3,345.0

PRODUCTION CASING Report Date: 5/14/1951 00:00

Item	OD (in)	Grade	Wt. (ppf)	TopMD (ft)	BtmMD (ft)
CASING JOINT(S)	7.000	N-80	26.00	9.6	70.6
CASING JOINT(S)	7.000	N-80	23.00	70.6	5,857.5
CASING JOINT(S)	7.000	N-80	26.00	5,857.5	7,550.0

LINER Report Date: 12/21/2000 00:00

Item	OD (in)	Grade	Wt. (ppf)	TopMD (ft)	BtmMD (ft)
LINER HANGER PACKER	6.276			6,459.9	6,467.8
LINER HANGER	6.276			6,467.8	6,473.2
CROSSOVER	6.276			6,473.2	6,477.5
CASING JOINT(S)	5.000	N-80	15.00	6,477.5	7,127.4
CROSSOVER	5.000			7,127.4	7,128.1
CASING JOINT(S)	3.500	N-80	9.30	7,128.1	7,739.2
PUP JOINT	3.500	N-80	9.30	7,739.2	7,743.2
DRILLABLE PACKOFF	4.500			7,743.2	7,747.3
ECP	6.125			7,747.3	7,758.0
FLOAT COLLAR	3.500			7,758.0	7,759.2
PUP JOINT	3.500	N-80	9.30	7,759.2	7,761.0
SLOTTED LINER	3.500	L-80	9.30	7,761.0	8,491.9
GUIDE SHOE	3.500	N-80	9.30	8,491.9	8,492.0

Well: 322H-3G-RD2 S/T/R: 3G/31S/24E

CASING CEMENT DETAIL
- - -
Sfc Csg. Cmt Vol.: 470 sx
Hole Size: 22"
Top Job: No
Rtns to Sfc:
TTOC: Sfc
- - -

Interm Csg. Cmt Vol.: 500 sx
Hole Size: 15"
Top Job: No
Rtns to Sfc: No
TTOC: 1760'
- - -

Prod. Csg. Cmt Vol.: 500 sx
Hole Size: 9.875"
Top Job: No
Rtns to Sfc: No
TTOC: 4995'
- - -

RD Liner Cmt Vol.: 170 cf
Hole Size: 6.125"
Top Job: No
Rtns to Sfc: No
TTOC: TOL
- - -
Top of Formation:
UBA: N/A
BLW: N/A

Volume Behind Pipe:
1.3 Yield Assumed
Theoretical Calculations (TTOC)

Event: WELL ENHANCEMENT
Event End:
Sec. Reason:
End Status:
Well Classification: DEVELOPMENT

OCCIDENTAL OF ELK HILLS INC

323-34S

Ground Level: 841.0ft
Datum: ORIGINAL KB @ 859.00ft (default)
API No.: 0402967945

Wellbore: ST1
PBMD: 7,509.0ft
Btm TMD: 7,671.0ft
Spud Date: 11/17/1982 00:00
BH Coord X: 6,146,391.00uss ft
BH Coord Y: 2,290,088.20uss ft

Casing Shoes (ft)	Schematic (8/1/2008)	Openings Top/Btm/Type/Status

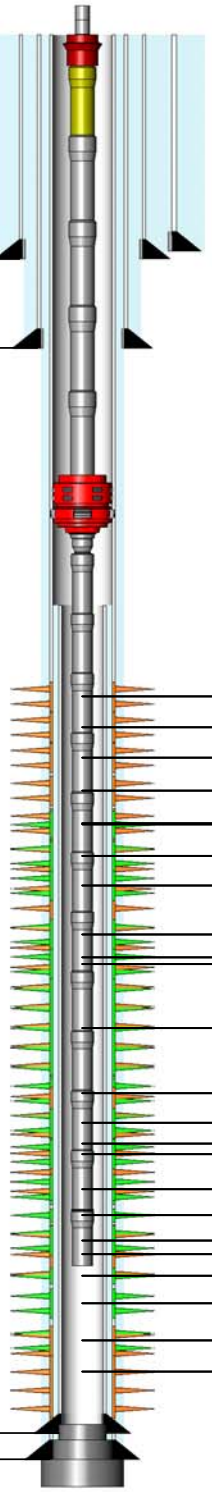

57.0
306.0
3,255.0
7,534.9
7,659.0

7,006.0ft, 7,032.0ft, PERFORATED, SQUEEZ
7,046.0ft, 7,056.0ft, PERFORATED, SQUEEZ
7,066.0ft, 7,076.0ft, PERFORATED, SQUEEZ
7,109.0ft, 7,175.0ft, PERFORATED, SQUEEZ
7,199.0ft, 7,212.0ft, PERFORATED, SQUEEZ
7,200.0ft, 7,214.0ft, PERFORATED, OPEN
7,225.0ft, 7,230.0ft, PERFORATED, OPEN
7,230.0ft, 7,245.0ft, PERFORATED, OPEN
7,250.0ft, 7,265.0ft, PERFORATED, OPEN
7,222.0ft, 7,275.0ft, PERFORATED, SQUEEZ
7,265.0ft, 7,270.0ft, PERFORATED, OPEN
7,270.0ft, 7,284.0ft, PERFORATED, OPEN
7,290.0ft, 7,325.0ft, PERFORATED, OPEN
7,325.0ft, 7,335.0ft, PERFORATED, OPEN
7,300.0ft, 7,370.0ft, PERFORATED, SQUEEZ
7,338.0ft, 7,354.0ft, PERFORATED, OPEN
7,358.0ft, 7,374.0ft, PERFORATED, OPEN
7,378.0ft, 7,392.0ft, PERFORATED, OPEN
7,396.0ft, 7,406.0ft, PERFORATED, OPEN
7,395.0ft, 7,420.0ft, PERFORATED, SQUEEZ
7,412.0ft, 7,420.0ft, PERFORATED, OPEN
7,425.0ft, 7,438.0ft, PERFORATED, OPEN
7,445.0ft, 7,465.0ft, PERFORATED, OPEN
7,445.0ft, 7,505.0ft, PERFORATED, SQUEEZ

ROD STRING Report Date: 7/26/2008 00:00

Component	Top MD (ft)	Btm MD (ft)
POLROD	0.0	36.0
PNYROD	36.0	46.0
ROD	46.0	2,746.0
ROD	2,746.0	5,446.0
R-4PER	5,446.0	6,406.0
ROD	6,406.0	7,366.0
RSTBAR	7,366.0	7,370.0
INSPMP	7,370.0	7,394.0

TUBING STRING Report Date: 7/25/2008 00:00

Component	Top MD (ft)	Btm MD (ft)
TH-DBB	18.0	18.0
PUPJNT	18.0	28.0
TBGJNT	28.0	6,369.5
AC	6,369.5	6,372.1
TBGJNT	6,372.1	6,433.9
XO	6,433.9	6,435.0
TBGJNT	6,435.0	7,378.7
STNIP	7,378.7	7,379.8
TBGJNT	7,379.8	7,410.9

PLUG BACK Report Date: 8/27/2003 00:00

Component	Top MD (ft)	Btm MD (ft)
CEMENT	7,509.0	7,554.0

PLUG BACK Report Date: 2/1/1983 00:00

Component	Top MD (ft)	Btm MD (ft)
CEMENT	7,554.0	7,659.0

PLUG BACK Report Date: 1/3/1983 00:00

Component	Top MD (ft)	Btm MD (ft)
CEMENT	7,659.0	7,675.0

CONDUCTOR CASING Report Date: 11/17/1982 00:00

Item	OD (in)	Grade	Wt. (ppf)	TopMD (ft)	BtmMD (ft)
CASING JOINT(S)	20.000			18.0	57.0

SURFACE CASING Report Date: 12/9/1982 00:00

Item	OD (in)	Grade	Wt. (ppf)	TopMD (ft)	BtmMD (ft)
CASING JOINT(S)	13.375	H-40	48.00	18.0	306.0

INTERMEDIATE CASING Report Date: 12/14/1982 00:00

Item	OD (in)	Grade	Wt. (ppf)	TopMD (ft)	BtmMD (ft)
CASING JOINT(S)	9.625	K-55	40.00	18.0	3,255.0

PRODUCTION CASING Report Date: 1/3/1983 00:00

Item	OD (in)	Grade	Wt. (ppf)	TopMD (ft)	BtmMD (ft)
CASING JOINT(S)	7.000	N-80	26.00	18.0	83.1
CASING JOINT(S)	7.000	K-55	23.00	83.1	4,972.1
CASING JOINT(S)	7.000	K-55	26.00	4,972.1	6,600.1
CASING JOINT(S)	7.000	N-80	26.00	6,600.1	6,643.1
FLAG JOINT	7.000	N-80	26.00	6,643.1	6,666.9
CASING JOINT(S)	7.000	N-80	26.00	6,666.9	7,659.0

INNER LINER Report Date: 8/27/2003 00:00

Item	OD (in)	Grade	Wt. (ppf)	TopMD (ft)	BtmMD (ft)
LINER HANGER	5.000			6,669.0	6,673.3
CASING JOINT(S)	5.000	P-110	18.00	6,673.3	7,493.3
CASING JOINT(S)	5.000	P-110	18.00	7,493.3	7,533.7
FLOAT SHOE	5.000			7,533.7	7,534.9

Well: 323-34S S/T/R: 34S/30S/24E

CASING CEMENT DETAIL
- - -
Sfc Csg. Cmt Vol.: 475 cf
Hole Size: 17.5"
Top Job: no
Rtns to Sfc: 38 cf
TOC: sfc
- - -

Interm Csg. Cmt Vol.: 1530 cf
Hole Size: 12.25"
Top Job: no
Rtns to Sfc: 55 cf
TOC: sfc
- - -

Prod. Csg. Cmt Vol.: 1825 cf
Hole Size: 8.75"
Top Job: no
Rtns to Sfc: 5 cf
TOC: sfc
- - -

Liner Cmt Vol.:
Hole Size:
Top Job:
Rtns to Sfc :
TTOC:
- - -
Top of Formation:
UBA: 7186'
BLW: 7545'

Volume Behind Pipe:
1.3 Yield Assumed
Theoretical Calculations (TTOC)

OCCIDENTAL OF ELK HILLS INC

323-35S

Event: WELL MAINT - RIG
Event End: 2/18/2009 00:00
Sec. Reason: SPLIT

Ground Level: 646.1ft
Datum: ORIGINAL KB @ 669.10ft (default)
API No.: 0403021081

Wellbore: ORIGINAL HOLE
PBMD: 7,345.0ft
Btm TMD: 7,694.0ft
Spud Date: 10/6/2002 00:00
BH Coord X: 6,151,697.56uss ft
BH Coord Y: 2,290,162.15uss ft

Casing Shoes (ft)	Schematic (3/1/2009)	Openings Top/Btm/Type/Status

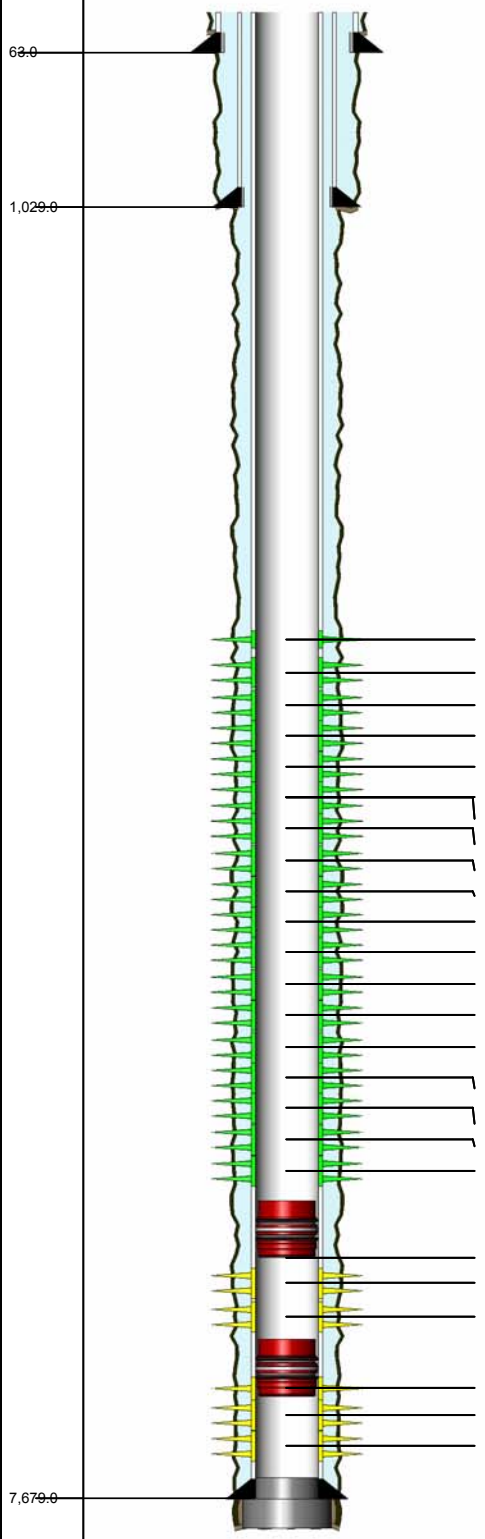

6,852.0ft, 6,875.0ft, PERFORATED, OPEN
6,996.0ft, 7,003.0ft, PERFORATED, OPEN
7,030.0ft, 7,041.0ft, PERFORATED, OPEN
7,044.0ft, 7,058.0ft, PERFORATED, OPEN
7,064.0ft, 7,070.0ft, PERFORATED, OPEN
7,070.0ft, 7,071.0ft, PERFORATED, OPEN
7,070.0ft, 7,080.0ft, PERFORATED, OPEN
7,080.0ft, 7,098.0ft, PERFORATED, OPEN
7,120.0ft, 7,147.0ft, PERFORATED, OPEN
7,152.0ft, 7,154.0ft, PERFORATED, OPEN
7,154.0ft, 7,164.0ft, PERFORATED, OPEN
7,164.0ft, 7,177.0ft, PERFORATED, OPEN
7,190.0ft, 7,197.0ft, PERFORATED, OPEN
7,201.0ft, 7,208.0ft, PERFORATED, OPEN
7,222.0ft, 7,240.0ft, PERFORATED, OPEN
7,240.0ft, 7,250.0ft, PERFORATED, OPEN
7,250.0ft, 7,262.0ft, PERFORATED, OPEN
7,268.0ft, 7,304.0ft, PERFORATED, OPEN
7,307.0ft, 7,315.0ft, PERFORATED, OPEN
7,350.0ft, 7,351.0ft, SQZ PERFS, ISOLATED
7,380.0ft, 7,394.0ft, PERFORATED, ISOLATED
7,400.0ft, 7,406.0ft, PERFORATED, ISOLATED
7,414.0ft, 7,442.0ft, PERFORATED, ISOLATED
7,446.0ft, 7,458.0ft, PERFORATED, ISOLATED
7,462.0ft, 7,505.0ft, PERFORATED, ISOLATED

Job Type: PRIMARY

Top MD (ft)	Base MD (ft)	Plugged
23.0	63.0	N

Job Type: PRIMARY

Top MD (ft)	Base MD (ft)	Plugged
23.0	1,029.0	N

Job Type: PRIMARY

Top MD (ft)	Base MD (ft)	Plugged
23.0	7,679.0	Y

Job Type: SQUEEZE

Top MD (ft)	Base MD (ft)	Plugged
7,270.0	7,360.0	

CONDUCTOR CASING Report Date: 9/24/2002 00:00

Item	OD (in)	Grade	Wt. (ppf)	TopMD (ft)	BtmMD (ft)
CASING JOINT(S)	14.000			23.0	63.0

SURFACE CASING Report Date: 10/8/2002 00:00

Item	OD (in)	Grade	Wt. (ppf)	TopMD (ft)	BtmMD (ft)
CASING JOINT(S)	9.625	J-55	36.00	23.0	981.3
	9.625			981.3	981.4
CASING JOINT(S)	9.625	J-55	36.00	981.4	1,027.8
GUIDE SHOE	9.625	J-55	36.00	1,027.8	1,029.0

PRODUCTION CASING Report Date: 10/22/2002 00:00

Item	OD (in)	Grade	Wt. (ppf)	TopMD (ft)	BtmMD (ft)
CASING JOINT(S)	7.000	N-80	29.00	23.0	3,888.3
CASING JOINT(S)	7.000	N-80	29.00	3,888.3	6,398.5
CASING JOINT(S)	7.000	N-80	29.00	6,398.5	6,848.2
FLAG JOINT	7.000	P-110	29.00	6,848.2	6,874.3
CASING JOINT(S)	7.000	N-80	29.00	6,874.3	7,589.7
FLOAT COLLAR	7.000	N-80	29.00	7,589.7	7,591.2
CASING JOINT(S)	7.000	N-80	29.00	7,591.2	7,677.5
FLOAT SHOE	7.000	N-80	29.00	7,677.5	7,679.0

Well: 323-35S S/T/R: 35S/30S/24E

CASING CEMENT DETAIL
- - -
Sfc Csg. Cmt Vol.: 350 sx
Hole Size: 12.25"
Top Job:
Rtns to Sfc: 15 Bbls
TOC: SURFACE
- - -

Interm Csg. Cmt Vol.:
Hole Size:
Top Job:
Rtns to Sfc:
TTOC:
- - -

Prod. Csg. Cmt Vol.: 1570 cft
Hole Size: 8.75"
Top Job:
Rtns to Sfc: 5 Bbls
TOC: SURFACE

Liner Cmt Vol.:
Hole Size:
Top Job:
Rtns to Sfc:
TTOC:
- - -
Top of Formation:
UBA: 7027 ft MD
BLW: 7543 ft MD

Volume Behind Pipe:
1.3 Yield Assumed
Theoretical Calculations (TTOC)

OCCIDENTAL OF ELK HILLS INC

324-2G

Event: WELL MAINT - RIGLESS
Event End: 2/23/2008 00:00
Sec. Reason:
End Status: FINISHED - SUCCESS
Well Classification: INJECTION

Ground Level: 876.0ft
Datum: ORIGINAL KB @ 890.00ft (KEY 2817)(default)
API No.: 0402960591

Wellbore: ST1
PBMD: 8,322.0ft
Btm TMD: 8,350.0ft
Spud Date: 12/1/1979 00:00
BH Coord X: 6,151,651.26uss ft
BH Coord Y: 2,284,425.27uss ft

Casing Shoes (ft)	Schematic (3/1/2008)	Openings Top/Btm/Type/Status

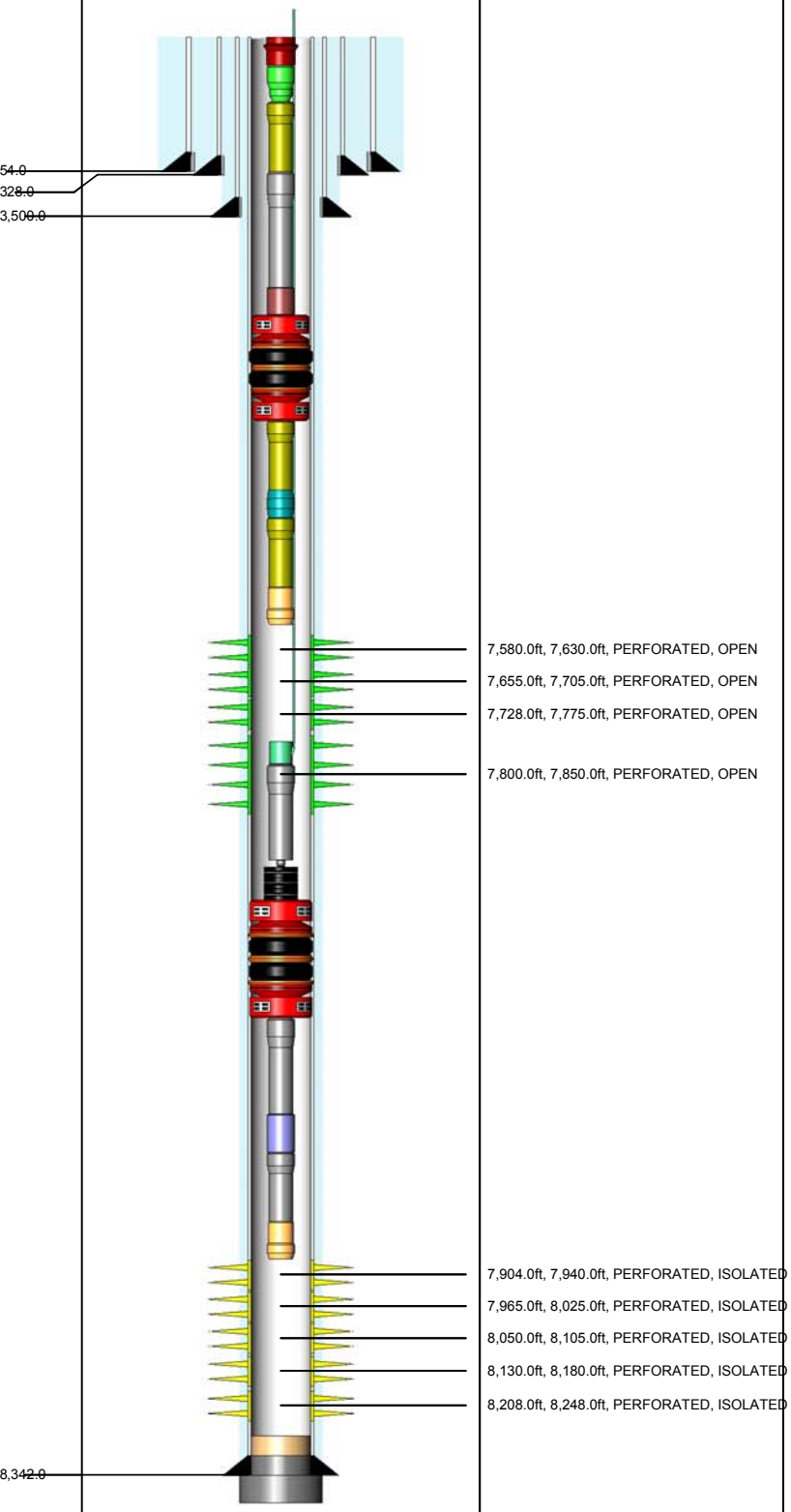

TUBING STRING — Report Date: 12/16/2002 00:00

Component	Top MD (ft)	Btm MD (ft)
TH-DBB	14.0	14.6
FATNIP	14.6	16.3
PUPJNT	16.3	40.6
TBGJNT	40.6	7,396.5
ON-OFF	7,396.5	7,398.0
PKR-S	7,398.0	7,402.1
PUPJNT	7,402.1	7,412.2
PNIP-O	7,412.2	7,413.4
PUPJNT	7,413.4	7,423.4
WLREG	7,423.4	7,423.8

TUBING STRING — Report Date: 11/20/2002 00:00

Component	Top MD (ft)	Btm MD (ft)
INJM-V	7,824.7	7,833.8
TBGJNT	7,833.8	7,864.9
XO	7,864.9	7,866.0
SA	7,866.0	7,866.4
PKR-S	7,866.4	7,872.2
TBGJNT	7,872.2	7,882.1
NOGO-O	7,882.1	7,883.2
TBGJNT	7,883.2	7,889.2
WLREG	7,889.2	7,889.7

PLUG BACK — Report Date: 3/13/1989 00:00

Component	Top MD (ft)	Btm MD (ft)
FILL	8,300.0	8,322.0

PLUG BACK — Report Date: 4/1/1980 00:00

Component	Top MD (ft)	Btm MD (ft)
CEMENT	8,322.0	8,342.0

PLUG BACK — Report Date: 2/8/1980 00:00

Component	Top MD (ft)	Btm MD (ft)
CEMENT	8,342.0	8,350.0

CONDUCTOR CASING — Report Date: 12/18/1979 00:00

Item	OD (in)	Grade	Wt. (ppf)	TopMD (ft)	BtmMD (ft)
CASING JOINT(S)	20.000		94.00	14.0	54.0

SURFACE CASING — Report Date: 1/1/1980 00:00

Item	OD (in)	Grade	Wt. (ppf)	TopMD (ft)	BtmMD (ft)
CASING JOINT(S)	13.375	K-55	54.50	14.0	328.0

INTERMEDIATE CASING — Report Date: 1/6/1980 00:00

Item	OD (in)	Grade	Wt. (ppf)	TopMD (ft)	BtmMD (ft)
CASING JOINT(S)	9.625	K-55	40.00	14.0	3,500.0

PRODUCTION CASING — Report Date: 2/8/1980 00:00

Item	OD (in)	Grade	Wt. (ppf)	TopMD (ft)	BtmMD (ft)
CASING JOINT(S)	7.000	N-80	26.00	14.0	77.9
CASING JOINT(S)	7.000	N-80	23.00	77.9	2,838.6
CASING JOINT(S)	7.000	K-55	23.00	2,838.6	5,758.8
CASING JOINT(S)	7.000	N-80	26.00	5,758.8	6,744.7
FLAG JOINT	7.000	N-80	26.00	6,744.7	6,764.6
CASING JOINT(S)	7.000	N-80	26.00	6,764.6	8,341.0
FLOAT SHOE	7.000	N-80	26.00	8,341.0	8,342.0

Well: 324-2G S/T/R: 2G/31S/24E

CASING CEMENT DETAIL
- - -
Sfc Csg. Cmt Vol.: 500 cf
Hole Size: 17.5"
Top Job: No
Rtns to Sfc: yes
TOC: sfc
- - -

Interm Csg. Cmt Vol.: 1780 cf
Hole Size: 12.25"
Top Job: No
Rtns to Sfc: yes
TOC: sfc
- - -

Prod. Csg. Cmt Vol.: 2260 cf
Hole Size: 8.75"
Top Job: no
Rtns to Sfc: no
TTOC: CBL suggests above 6620'
- - -

Liner Cmt Vol.:
Hole Size:
Top Job:
Rtns to Sfc:
TTOC:
- - -
Top of Formation:
UBA: 7580'
BLW: 8253'

Volume Behind Pipe:
1.3 Yield Assumed
Theoretical Calculations (TTOC)

Wellbore: ST1

Event: WELL MAINT - RIGLESS
Event End: 4/30/2009 00:00
Sec. Reason:
End Status: FINISHED - SUCCESS
Well Classification: INJECTION

OCCIDENTAL OF ELK HILLS INC

324-34S

Ground Level: 878.0ft
Datum: ORIGINAL KB @ 892.00ft (default)
API No.: 0402958426

PBMD: 7,390.0ft
Btm TMD: 8,086.4ft
Spud Date: 8/10/1978 00:00
BH Coord X: 6,146,316.80uss ft
BH Coord Y: 2,289,319.00uss ft

Casing Shoes (ft) | Schematic (5/1/2009) | Openings Top/Btm/Type/Status

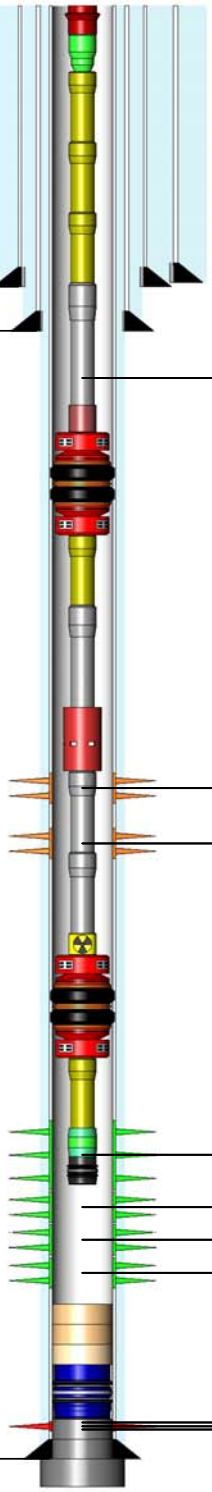

54.0
316.0
3,230.0
7,970.0

6,350.0ft, 6,350.0ft, PERFORATED, SQUEE
6,912.0ft, 6,955.0ft, PERFORATED, SQUEE
6,975.0ft, 7,030.0ft, PERFORATED, SQUEE
7,053.0ft, 7,114.0ft, PERFORATED, OPEN
7,137.0ft, 7,155.0ft, PERFORATED, OPEN
7,180.0ft, 7,220.0ft, PERFORATED, OPEN
7,242.0ft, 7,272.0ft, PERFORATED, OPEN
7,462.0ft, 7,520.0ft, PERFORATED, ABAND
7,560.0ft, 7,625.0ft, PERFORATED, ABAND
7,645.0ft, 7,715.0ft, PERFORATED, ABAND

PACKER ASSEMBLY (RETRIEVABLE) Report Date: 7/14/2003 00:00

Component	Top MD (ft)	Btm MD (ft)
TH-DBB	14.0	14.7
FATNIP	14.7	15.4
PUPJNT	15.4	17.5
PUPJNT	17.5	27.6
PUPJNT	27.6	33.7
TBGJNT	33.7	6,793.2
ON-OFF	6,793.2	6,794.6
PKR-S	6,794.6	6,800.1
PUPJNT	6,800.1	6,810.2
TBGJNT	6,810.2	6,904.4
SS-C	6,904.4	6,908.7
TBGJNT	6,908.7	7,034.4
RAMKR	7,034.4	7,038.5
PKR-S	7,038.5	7,044.0
PUPJNT	7,044.0	7,054.1
LNDNIP	7,054.1	7,055.5
POPLUG	7,055.5	7,056.1

PLUG BACK Report Date: 8/2/2004 00:00

Component	Top MD (ft)	Btm MD (ft)
FILL	7,366.0	7,375.0

PLUG BACK Report Date: 9/26/2003 00:00

Component	Top MD (ft)	Btm MD (ft)
FILL	7,375.0	7,386.0

PLUG BACK Report Date: 7/11/2003 00:00

Component	Top MD (ft)	Btm MD (ft)
SAND	7,386.0	7,390.0

PLUG BACK Report Date: 12/29/1979 00:00

Component	Top MD (ft)	Btm MD (ft)
CR-RET	7,390.0	7,392.0
CEMENT	7,392.0	7,926.0

PLUG BACK Report Date: 4/24/1979 00:00

Component	Top MD (ft)	Btm MD (ft)
CEMENT	7,926.0	7,970.0

PLUG BACK Report Date: 4/23/1979 00:00

Component	Top MD (ft)	Btm MD (ft)
CEMENT	7,970.0	8,090.0

CONDUCTOR CASING Report Date: 8/10/1978 00:00

Item	OD (in)	Grade	Wt. (ppf)	TopMD (ft)	BtmMD (ft)
CASING JOINT(S)	20.000			14.0	54.0

SURFACE CASING Report Date: 3/19/1979 00:00

Item	OD (in)	Grade	Wt. (ppf)	TopMD (ft)	BtmMD (ft)
CASING JOINT(S)	13.375	H-40	48.00	14.0	316.0

INTERMEDIATE CASING Report Date: 3/23/1979 00:00

Item	OD (in)	Grade	Wt. (ppf)	TopMD (ft)	BtmMD (ft)
CASING JOINT(S)	9.625	K-55	40.00	14.0	3,230.0

PRODUCTION CASING Report Date: 4/23/1979 00:00

Item	OD (in)	Grade	Wt. (ppf)	TopMD (ft)	BtmMD (ft)
CASING JOINT(S)	7.000	K-55	26.00	14.0	76.0
CASING JOINT(S)	7.000	K-55	23.00	76.0	5,030.0
CASING JOINT(S)	7.000	K-55	26.00	5,030.0	6,593.0
FLAG JOINT	7.000	K-55	26.00	6,593.0	6,613.6
CASING JOINT(S)	7.000	K-55	26.00	6,613.6	7,970.0

Well: 324-34S S/T/R: 34S/30S/24E

CASING CEMENT DETAIL
- - -
Sfc Csg. Cmt Vol.: 350 cf
Hole Size: 17.5"
Top Job: no
Rtns to Sfc: 30 cf
TOC: sfc
- - -

Interm Csg. Cmt Vol.: 1630 cf
Hole Size: 12.25"
Top Job: no
Rtns to Sfc: 150 cf
TOC: sfc
- - -

Prod. Csg. Cmt Vol.: 3000 cf
Hole Size: 8.75"
Top Job: no
Rtns to Sfc: 40 cf
TOC: sfc
- - -

Liner Cmt Vol.:
Hole Size:
Top Job:
Rtns to Sfc :
TTOC:
- - -
Top of Formation:
UBA: 6911'
BLW: 7310'

Volume Behind Pipe:
1.3 Yield Assumed
Theoretical Calculations (TTOC)

OCCIDENTAL OF ELK HILLS INC

324-35S

Event: ART LIFT REVISION
Event End: 8/7/2008 00:00
Sec. Reason: ACIDIZE

Ground Level: 698.0ft
Datum: ORIGINAL KB @ 706.00ft (default)
API No.: 0402927772

Wellbore: ORIGINAL HOLE
PBMD: 7,351.0ft
Btm TMD: 7,370.0ft
Spud Date: 10/9/1952 00:00
BH Coord X: 6,151,785.20uss ft
BH Coord Y: 2,289,513.92uss ft

Casing Shoes (ft)	Schematic (8/7/2008)	Openings Top/Btm/Type/Status

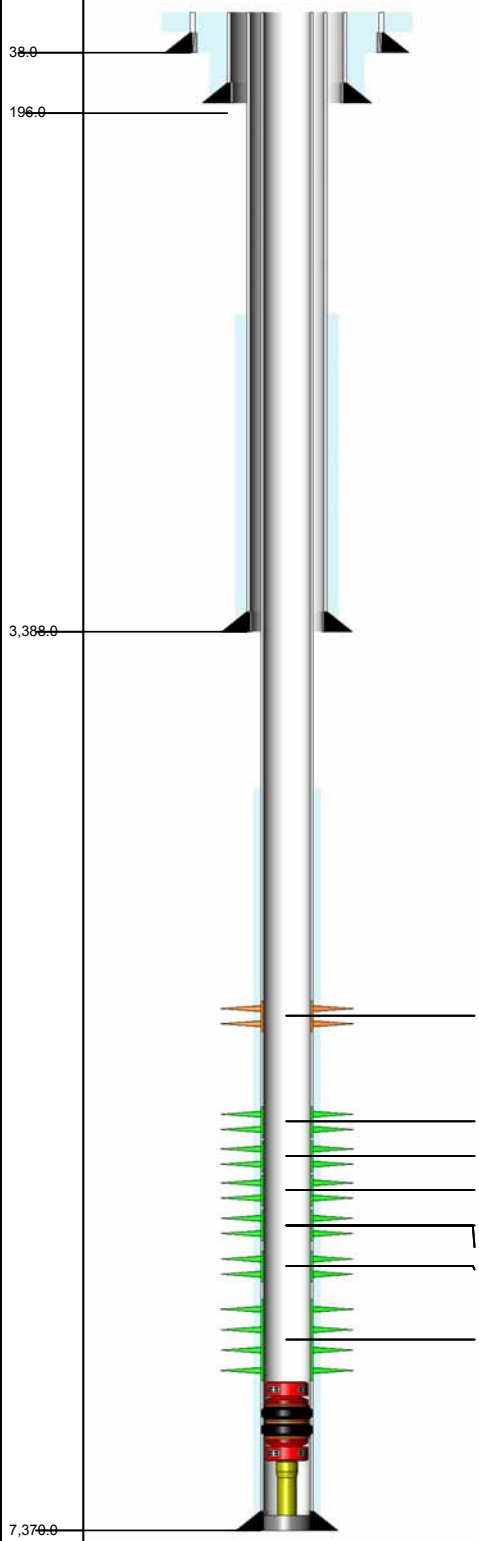

6,237.0ft, 6,238.0ft, PERFORATED, SQUEEZED
6,819.0ft, 6,934.0ft, PERFORATED, OPEN
6,960.0ft, 7,065.0ft, PERFORATED, OPEN
7,080.0ft, 7,158.0ft, PERFORATED, OPEN
7,173.0ft, 7,223.0ft, PERFORATED, OPEN
7,173.0ft, 7,223.1ft, PERFORATED, OPEN
7,244.0ft, 7,284.0ft, PERFORATED, OPEN
7,303.0ft, 7,343.0ft, PERFORATED, OPEN

Job Type: PRIMARY

Top MD (ft)	Base MD (ft)	Plugged
8.0	38.0	

Job Type: PRIMARY

Top MD (ft)	Base MD (ft)	Plugged
8.0	195.0	

Job Type: PRIMARY

Top MD (ft)	Base MD (ft)	Plugged
1,840.0	3,388.0	

Job Type: PRIMARY

Top MD (ft)	Base MD (ft)	Plugged
4,600.0	7,370.0	

CONDUCTOR CASING Report Date: 10/9/1952 00:00

Item	OD (in)	Grade	Wt. (ppf)	TopMD (ft)	BtmMD (ft)
CASING JOINT(S)	26.000		68.00	8.0	38.0

SURFACE CASING Report Date: 12/2/1952 00:00

Item	OD (in)	Grade	Wt. (ppf)	TopMD (ft)	BtmMD (ft)
CASING JOINT(S)	16.000	H-40	65.00	8.0	194.0
GUIDE SHOE	16.000			194.0	195.0

INTERMEDIATE CASING Report Date: 12/8/1952 00:00

Item	OD (in)	Grade	Wt. (ppf)	TopMD (ft)	BtmMD (ft)
CASING JOINT(S)	10.750	J-55	45.50	8.0	40.0
CASING JOINT(S)	10.750	J-55	40.50	40.0	2,192.0
CASING JOINT(S)	10.750	J-55	45.50	2,192.0	3,345.6
FLOAT COLLAR	10.750			3,345.6	3,347.6
CASING JOINT(S)	10.750	J-55	45.50	3,347.6	3,386.0
FLOAT SHOE	10.750			3,386.0	3,388.0

PRODUCTION CASING Report Date: 1/3/1953 00:00

Item	OD (in)	Grade	Wt. (ppf)	TopMD (ft)	BtmMD (ft)
CASING JOINT(S)	7.000	N-80	26.00	8.0	78.9
CASING JOINT(S)	7.000	N-80	23.00	78.9	5,863.9
CASING JOINT(S)	7.000	N-80	26.00	5,863.9	7,331.4
FLOAT COLLAR	7.000			7,331.4	7,333.4
CASING JOINT(S)	7.000	N-80	26.00	7,333.4	7,368.0
FLOAT SHOE	7.000			7,368.0	7,370.0

Well: 324-35S S/T/R: 35S/30S/24E

CASING CEMENT DETAIL
- - -
Sfc Csg. Cmt Vol.: 500 sx
Hole Size: 18" (est)
Top Job:
Rtns to Sfc: 0.4 Bbls
TTOC: SURFACE
- - -

Interm Csg. Cmt Vol.: 700 sx
Hole Size: 12" (Est)
Top Job:
Rtns to Sfc: NONE
TTOC: 1840'
- - -
Prod. Csg. Cmt Vol.: 500 sx
Hole Size: 9"
Top Job:
Rtns to Sfc: NONE
TTOC: 4600'

Liner Cmt Vol.:
Hole Size:
Top Job:
Rtns to Sfc:
TTOC:
- - -
Top of Formation:
UBA: 6836 ft MD
BLW: 7325 ft MD

Volume Behind Pipe:
1.3 Yield Assumed
Theoretical Calculations (TTOC)

OCCIDENTAL OF ELK HILLS INC

324-3G

Event: WELL MAINT - RIGLESS
Event End: 3/3/2006 00:00
Sec. Reason:

Ground Level: 935.0ft
KB to Ground: 10.0ft
Datum: ORIGINAL KB @ 945.00ft (default)
API No.: 0402929020

Wellbore: ORIGINAL HOLE
Top TMD: 10.0ft
PBMD: 7,731.0ft
Btm TMD: 7,750.0ft
Spud Date: 7/15/1950 00:00
BH Coord X: 6,146,482.96uss ft BH Coord Y: 2,284,561.83uss

Casing Shoes (ft) | Schematic (4/1/2006) | Openings Top/Btm/Type/Status

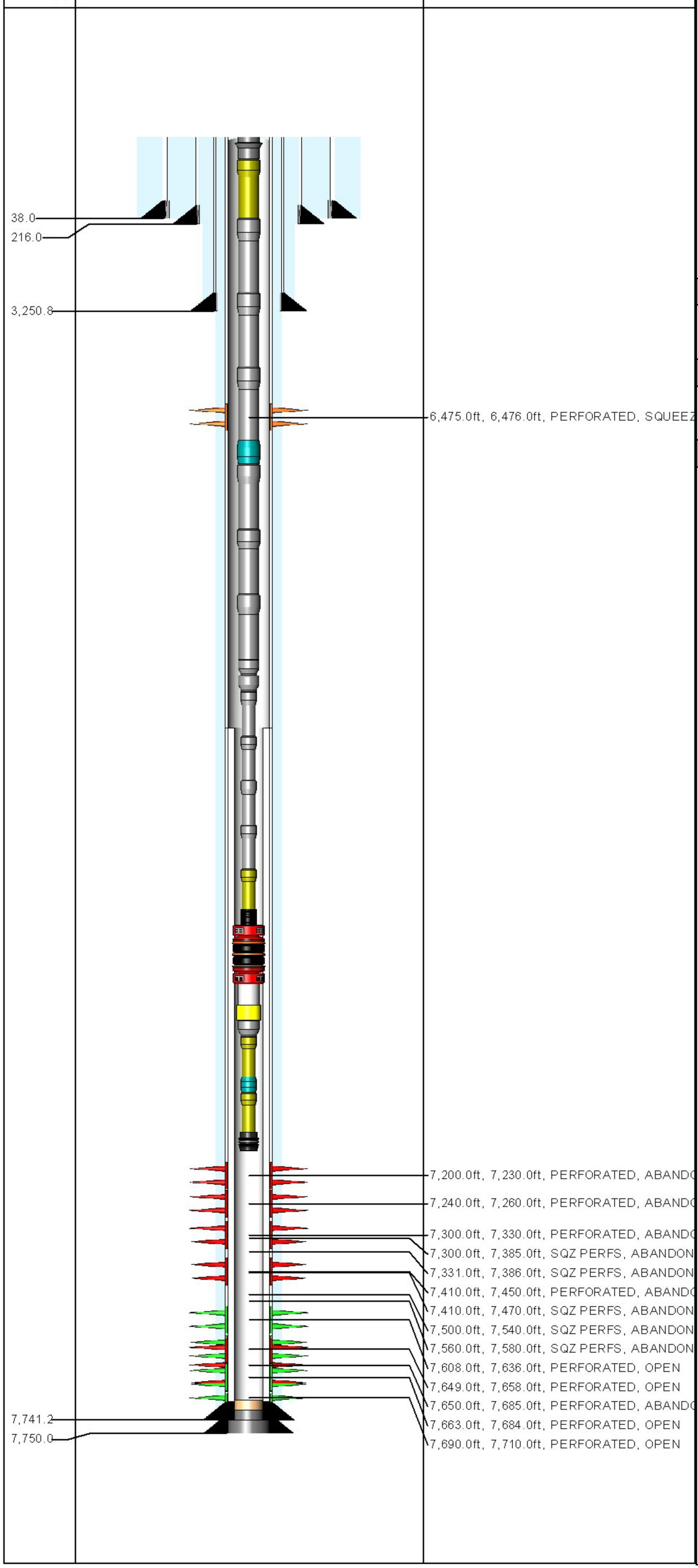

TUBING STRING Report Date: 11/20/2001 00:00

Component	Top MD (ft)	Btm MD (ft)
TH-SGL	10.0	10.6
PUPJNT	10.6	23.3
TBGJNT	23.3	6,823.2
PRONIP	6,823.2	6,824.6
TBGJNT	6,824.6	6,855.8
XO	6,855.8	6,856.9
XO	6,856.9	6,858.0
TBGJNT	6,858.0	7,045.9
PUPJNT	7,045.9	7,052.1
SA	7,052.1	7,052.6
PKR-S	7,052.6	7,055.0
SBEXT	7,055.0	7,062.6
MOEXT	7,062.6	7,072.6
XO	7,072.6	7,073.2
PUPJNT	7,073.2	7,077.4
PRONIP	7,077.4	7,078.5
PUPJNT	7,078.5	7,082.6
POPLUG	7,082.6	7,083.2

PLUG BACK Report Date: 2/4/2004 00:00

Component	Top MD (ft)	Btm MD (ft)
FILL	7,705.0	7,731.0

PLUG BACK Report Date: 11/17/2001 00:00

Component	Top MD (ft)	Btm MD (ft)
CEMENT	7,731.0	7,741.2

PLUG BACK Report Date: 11/9/2001 00:00

Component	Top MD (ft)	Btm MD (ft)
CEMENT	7,741.2	7,750.0

CONDUCTOR CASING Report Date: 7/15/1950 00:00

Item Description	Btm MD(ft)
CASING JOINT(S) 26 in,	38.0

SURFACE CASING Report Date: 7/30/1950 00:00

Item Description	Btm MD (ft)
CASING JOINT(S) 16 in,	216.0

INTERMEDIATE CASING Report Date: 8/3/1950 00:00

Item Description	Btm MD (ft)
CASING JOINT(S) 10.75 in, , J-55, 45.5	94.8
CASING JOINT(S) 10.75 in, , J-55, 40.5	1,943.6
CASING JOINT(S) 10.75 in, , J-55, 45.5	3,250.8

PRODUCTION CASING Report Date: 9/1/1950 00:00

Item Description	Btm MD (ft)
CASING JOINT(S) 7 in, , N-80, 26	54.7
CASING JOINT(S) 7 in, , N-80, 23	5,877.8
CASING JOINT(S) 7 in, , N-80, 26	7,750.0

INNER LINER Report Date: 11/14/2001 00:00

Item Description	Btm MD (ft)
LINER HANGER 7 in, , N-80, 15	6,922.7
CASING JOINT(S) 5 in, , N-80, 15	7,737.5
LANDING COLLAR 5 in, , N-80, 15	7,738.5
FLOAT SHOE 5 in, , N-80, 15	7,741.2

Well: 324-3G S/T/R: 3G/31S/24E

CASING CEMENT DETAIL
- - -
Sfc Csg. Cmt Vol.: 450 sx
Hole Size: 22"
Top Job: No
Rtns to Sfc: Yes
TOC: Sfc
- - -

Interm Csg. Cmt Vol.: 700 sx
Hole Size: 15"
Top Job: No
Rtns to Sfc: No
TTOC: 1901'
- - -

Prod. Csg. Cmt Vol.: 500 sx
Hole Size: 9.75"
Top Job: No
Rtns to Sfc: No
TTOC: 5402'
- - -

Liner Cmt Vol.:
Hole Size:
Top Job:
Rtns to Sfc:
TOC:
- - -

Top of Formation:
UBA: 7274'
BLW: N/A

Volume Behind Pipe:
1.3 Yield Assumed
Theoretical Calculations (TTOC)

Event: WELL MAINT - RIG
Event End: 10/2/2008 00:00
Sec. Reason: PIN PART
End Status: FINISHED - SUCCESS
Well Classification: DEVELOPMENT

OCCIDENTAL OF ELK HILLS INC

325-34S

Ground Level: 869.0ft
Datum: ORIGINAL KB @ 882.00ft (default)
API No.: 0402967366

Wellbore: ST1
PBMD: 7,292.0ft
Btm TMD: 7,350.0ft
Spud Date: 8/20/1982 00:00
BH Coord X: 6,146,200.66uss ft
BH Coord Y: 2,288,860.58uss ft

Casing Shoes (ft) | Schematic (10/2/2008) | Openings Top/Btm/Type/Status

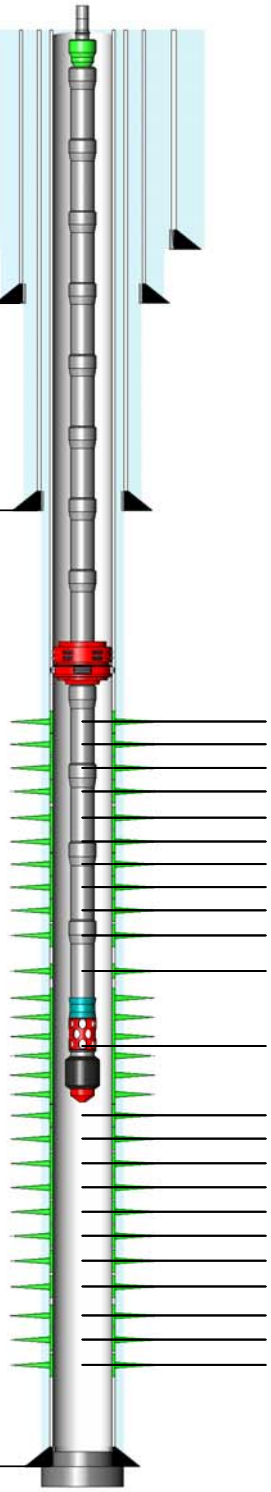

6,260.0ft, 6,358.0ft, PERFORATED, OPEN
6,365.0ft, 6,369.0ft, PERFORATED, OPEN
6,393.0ft, 6,401.0ft, PERFORATED, OPEN
6,422.0ft, 6,434.0ft, PERFORATED, OPEN
6,497.0ft, 6,516.0ft, PERFORATED, OPEN
6,539.0ft, 6,558.0ft, PERFORATED, OPEN
6,563.0ft, 6,582.0ft, PERFORATED, OPEN
6,591.0ft, 6,622.0ft, PERFORATED, OPEN
6,630.0ft, 6,634.0ft, PERFORATED, OPEN
6,655.0ft, 6,679.0ft, PERFORATED, OPEN
6,711.0ft, 6,723.0ft, PERFORATED, OPEN
6,734.0ft, 6,798.0ft, PERFORATED, OPEN
6,800.0ft, 6,855.0ft, PERFORATED, OPEN
6,860.0ft, 6,870.0ft, PERFORATED, OPEN
6,880.0ft, 6,905.0ft, PERFORATED, OPEN
6,912.0ft, 6,922.0ft, PERFORATED, OPEN
6,930.0ft, 7,000.0ft, PERFORATED, OPEN
7,006.0ft, 7,018.0ft, PERFORATED, OPEN
7,026.0ft, 7,069.0ft, PERFORATED, OPEN
7,078.0ft, 7,097.0ft, PERFORATED, OPEN
7,112.0ft, 7,120.0ft, PERFORATED, OPEN
7,124.0ft, 7,168.0ft, PERFORATED, OPEN
7,173.0ft, 7,193.0ft, PERFORATED, OPEN

ROD STRING Report Date: 10/2/2008 00:00

Component	Top MD (ft)	Btm MD (ft)
POLROD	0.0	36.0
PNYROD	36.0	48.0
ROD	48.0	2,238.0
ROD	2,238.0	4,488.0
ROD	4,488.0	6,708.0
RSTBAR	6,708.0	6,712.0
INSPMP	6,712.0	6,742.0

TUBING STRING Report Date: 1/15/2006 00:00

Component	Top MD (ft)	Btm MD (ft)
TH	13.0	13.6
FATNIP	13.6	14.3
TBGJNT	14.3	5,988.5
AC	5,988.5	5,990.8
TBGJNT	5,990.8	6,752.4
STNIP	6,752.4	6,753.1
PERFJT	6,753.1	6,757.1
TBGJNT	6,757.1	6,788.2
TBGCOL	6,788.2	6,788.6
BULPLG	6,788.6	6,788.9

PLUG BACK Report Date: 11/22/1982 00:00

Component	Top MD (ft)	Btm MD (ft)
CEMENT	7,292.0	7,338.0

PLUG BACK Report Date: 9/13/1982 00:00

Component	Top MD (ft)	Btm MD (ft)
CEMENT	7,338.0	7,350.0

CONDUCTOR CASING Report Date: 8/20/1982 00:00

Item	OD (in)	Grade	Wt. (ppf)	TopMD (ft)	BtmMD (ft)
CASING JOINT(S)	20.000			13.0	53.0

SURFACE CASING Report Date: 9/9/1982 00:00

Item	OD (in)	Grade	Wt. (ppf)	TopMD (ft)	BtmMD (ft)
CASING JOINT(S)	13.375	H-40	48.00	13.0	331.6
GUIDE SHOE	13.375			331.6	333.0

INTERMEDIATE CASING Report Date: 9/13/1982 00:00

Item	OD (in)	Grade	Wt. (ppf)	TopMD (ft)	BtmMD (ft)
CASING JOINT(S)	9.625	K-55	40.00	13.0	3,271.9
GUIDE SHOE	9.625			3,271.9	3,273.0

PRODUCTION CASING Report Date: 9/29/1982 00:00

Item	OD (in)	Grade	Wt. (ppf)	TopMD (ft)	BtmMD (ft)
CASING JOINT(S)	7.000	K-55	26.00	13.0	84.0
CASING JOINT(S)	7.000	K-55	23.00	84.0	4,970.0
CASING JOINT(S)	7.000	K-55	26.00	4,970.0	6,178.9
FLAG JOINT	7.000	K-55	26.00	6,178.9	6,198.2
CASING JOINT(S)	7.000	K-55	26.00	6,198.2	7,292.5
FLOAT COLLAR	7.000	K-55	26.00	7,292.5	7,294.9
CASING JOINT(S)	7.000	K-55	26.00	7,294.9	7,337.0
GUIDE SHOE	7.000	K-55	26.00	7,337.0	7,338.0

Well: 325-34S S/T/R: 34S/30S/24E

CASING CEMENT DETAIL
- - -
Sfc Csg. Cmt Vol.: 500 cf
Hole Size: 17.5"
Top Job: no
Rtns to Sfc: 35 cf
TOC: sfc
- - -

Interm Csg. Cmt Vol.: 1580 cf
Hole Size: 12.25"
Top Job: no
Rtns to Sfc: 100 cf
TOC: sfc
- - -

Prod. Csg. Cmt Vol.: 1610 cf
Hole Size: 8.75"
Top Job: no
Rtns to Sfc: no
TTOC: sfc
- - -

Liner Cmt Vol.:
Hole Size:
Top Job:
Rtns to Sfc :
TTOC:
- - -
Top of Formation:
UBA: 6810'
BLW: 7196'

Volume Behind Pipe:
1.3 Yield Assumed
Theoretical Calculations (TTOC)

OCCIDENTAL OF ELK HILLS INC

325-35S

Event: WELL MAINT - RIGLESS
Event End:
Sec. Reason:

Ground Level: 743.0ft
Datum: ORIGINAL KB @ 760.00ft (default)
API No.: 0402981460

Wellbore: ORIGINAL HOLE
PBMD: 7,347.0ft
Btm TMD: 8,555.0ft
Spud Date: 11/1/1987 00:00
BH Coord X: 6,151,891.17uss ft
BH Coord Y: 2,289,051.91uss ft

Casing Shoes (ft)	Schematic (8/26/2009)	Openings Top/Btm/Type/Status

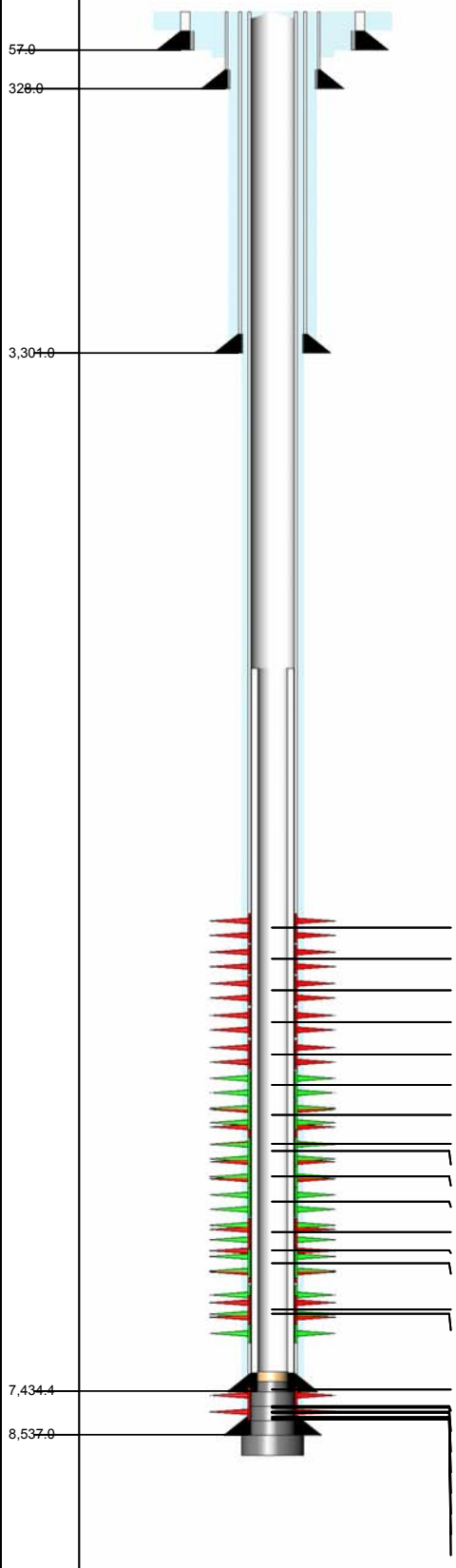

6,820.0ft, 6,874.0ft, PERFORATED, ABANDONE
6,894.0ft, 6,930.0ft, PERFORATED, ABANDONE
6,950.0ft, 6,990.0ft, PERFORATED, ABANDONE
7,012.0ft, 7,038.0ft, PERFORATED, ABANDONE
7,060.0ft, 7,100.0ft, PERFORATED, ABANDONE
7,110.0ft, 7,125.0ft, PERFORATED, OPEN
7,130.1ft, 7,170.0ft, PERFORATED, OPEN
7,130.0ft, 7,190.0ft, PERFORATED, ABANDONE
7,175.0ft, 7,186.0ft, PERFORATED, OPEN
7,186.0ft, 7,190.0ft, PERFORATED, OPEN
7,190.0ft, 7,204.0ft, PERFORATED, OPEN
7,209.0ft, 7,244.0ft, PERFORATED, OPEN
7,210.0ft, 7,270.0ft, PERFORATED, ABANDONE
7,250.0ft, 7,260.0ft, PERFORATED, OPEN
7,295.0ft, 7,325.0ft, PERFORATED, ABANDONE
7,276.0ft, 7,330.0ft, PERFORATED, OPEN
7,395.0ft, 7,435.0ft, PERFORATED, ABANDONE
7,450.0ft, 7,490.0ft, PERFORATED, ABANDONE
7,550.0ft, 7,620.0ft, PERFORATED, ABANDONE
7,868.0ft, 7,880.0ft, PERFORATED, ABANDONE
7,890.0ft, 7,920.0ft, PERFORATED, ABANDONE
7,948.0ft, 7,956.0ft, PERFORATED, ABANDONE
8,253.0ft, 8,262.0ft, PERFORATED, ABANDONE
8,385.0ft, 8,395.0ft, PERFORATED, ABANDONE
8,410.0ft, 8,443.0ft, PERFORATED, ABANDONE

Job Type: PRIMARY

Top MD (ft)	Base MD (ft)	Plugged
17.0	57.0	

Job Type: PRIMARY

Top MD (ft)	Base MD (ft)	Plugged
17.0	328.0	

Job Type: PRIMARY

Top MD (ft)	Base MD (ft)	Plugged
17.0	3,301.0	

Job Type: PRIMARY

Top MD (ft)	Base MD (ft)	Plugged
17.0	8,537.0	

Job Type: PLUG

Top MD (ft)	Base MD (ft)	Plugged
7,347.0	8,450.0	N

Job Type: PRIMARY

Top MD (ft)	Base MD (ft)	Plugged
6,477.0	7,434.4	

CONDUCTOR CASING — Report Date: 11/1/1987 00:00

Item	OD (in)	Grade	Wt. (ppf)	TopMD (ft)	BtmMD (ft)
CASING JOINT(S)	26.000			17.0	57.0

SURFACE CASING — Report Date: 11/21/1987 00:00

Item	OD (in)	Grade	Wt. (ppf)	TopMD (ft)	BtmMD (ft)
CASING JOINT(S)	13.375	H-40	48.00	17.0	328.0

INTERMEDIATE CASING — Report Date: 11/26/1987 00:00

Item	OD (in)	Grade	Wt. (ppf)	TopMD (ft)	BtmMD (ft)
CASING JOINT(S)	9.625	K-55	40.00	17.0	3,301.0

PRODUCTION CASING — Report Date: 1/11/1988 00:00

Item	OD (in)	Grade	Wt. (ppf)	TopMD (ft)	BtmMD (ft)
CASING JOINT(S)	7.000	N-80	29.00	17.0	285.8
CASING JOINT(S)	7.000	K-55	23.00	285.8	4,271.6
CASING JOINT(S)	7.000	K-55	26.00	4,271.6	6,430.6
CASING JOINT(S)	7.000	N-80	29.00	6,430.6	6,598.5
FLAG JOINT	7.000	N-80	29.00	6,598.5	6,620.4
CASING JOINT(S)	7.000	N-80	29.00	6,620.4	8,448.2
FLOAT COLLAR	7.000	N-80	29.00	8,448.2	8,450.3
CASING JOINT(S)	7.000	N-80	29.00	8,450.3	8,534.3
GUIDE SHOE	7.000	N-80	29.00	8,534.3	8,537.0

INNER LINER — Report Date: 2/18/2002 00:00

Item	OD (in)	Grade	Wt. (ppf)	TopMD (ft)	BtmMD (ft)
LINER HANGER PACKER	6.547	P-110	18.00	6,477.0	6,495.8
CROSSOVER	5.500	P-110	18.00	6,495.8	6,498.6
LINER HANGER	5.971	P-110	18.00	6,498.6	6,504.7
CASING JOINT(S)	5.000	P-110	18.00	6,504.7	7,340.8
FLOAT COLLAR	5.572	P-110	18.00	7,340.8	7,342.3
CASING JOINT(S)	5.000	P-110	18.00	7,342.3	7,386.8
FLOAT COLLAR	5.570	P-110	18.00	7,386.8	7,388.3
CASING JOINT(S)	5.000	P-110	18.00	7,388.3	7,432.6
GUIDE SHOE	5.572	P-110	18.00	7,432.6	7,434.4

Well: 325-35S S/T/R: 35S/30S/24E

CASING CEMENT DETAIL
- - -
Sfc Csg. Cmt Vol.: 500 cf
Hole Size: 17.5"
Top Job: no
Rtns to Sfc: 75 cf
TTOC: sfc
- - -

Interm Csg. Cmt Vol.: 1580 cf
Hole Size: 12.25"
Top Job: no
Rtns to Sfc: 35 cf
TOC: sfc
- - -

Prod. Csg. Cmt Vol.: 1700 cf
Hole Size: 8.75"
Top Job: no
Rtns to Sfc: no
TTOC: sfc

Liner Cmt Vol.:
Hole Size:
Top Job:
Rtns to Sfc:
TTOC:
- - -
Top of Formation:
UBA: 6817'
BLW: 7332'

Volume Behind Pipe:
1.3 Yield Assumed
Theoretical Calculations (TTOC)

Event: WELL MAINT - RIGLESS
Event End: 7/3/2008 00:00
Sec. Reason:
End Status: FINISHED - SUCCESS
Well Classification: INJECTION

OCCIDENTAL OF ELK HILLS INC

326-34S

Ground Level: 942.0ft
Datum: ORIGINAL KB @ 952.00ft (default)
API No.: 0402927660

Wellbore: ST1
PBMD: 7,204.0ft
Btm TMD: 7,205.0ft
Spud Date: 8/8/1951 00:00
BH Coord X: 6,146,572.21uss ft
BH Coord Y: 2,288,460.92uss ft

Casing Shoes (ft)	Schematic (8/1/2008)	Openings Top/Btm/Type/Status

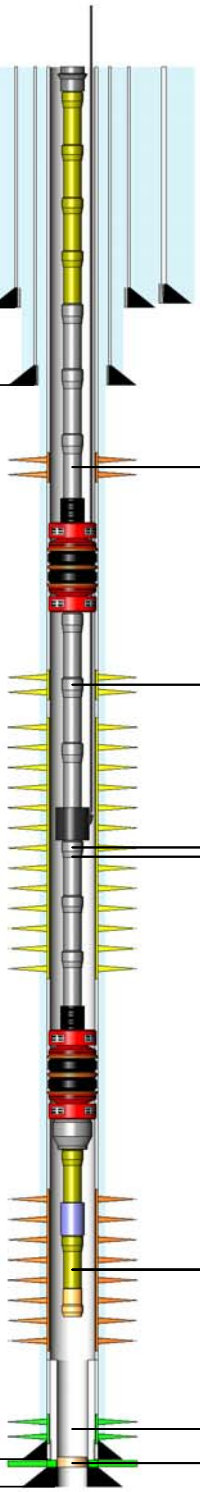

39.0
203.0
3,350.0
7,155.0
7,205.0

6,080.0ft, 6,081.0ft, PERFORATED, SQUEE
6,830.0ft, 6,910.0ft, PERFORATED, ISOLAT
6,920.0ft, 7,005.0ft, PERFORATED, ISOLAT
6,930.1ft, 7,005.1ft, PERFORATED, ISOLAT
7,020.0ft, 7,090.0ft, PERFORATED, SQUEE
7,020.0ft, 7,090.0ft, REPERFORATED, OPE
7,120.0ft, 7,135.0ft, PERFORATED, OPEN
7,157.4ft, 7,203.7ft, SLOTTED, OPEN

TUBING STRING — Report Date: 6/30/2000 00:00

Component	Top MD (ft)	Btm MD (ft)
TH-SGL	10.0	10.6
PUPJNT	10.6	15.1
PUPJNT	15.1	21.3
PUPJNT	21.3	29.5
PUPJNT	29.5	37.5
TBGJNT	37.5	6,748.0
SA	6,748.0	6,748.5
PKR-S	6,748.5	6,754.6
TBGJNT	6,754.6	6,971.0
INJM-D	6,971.0	6,980.2
TBGJNT	6,980.2	7,010.0
SA	7,010.0	7,010.5
PKR-S	7,010.5	7,014.8
XO	7,014.8	7,015.4
PUPJNT	7,015.4	7,021.5
NOGO-O	7,021.5	7,022.7
PUPJNT	7,022.7	7,027.0
WLREG	7,027.0	7,027.4

PLUG BACK — Report Date: 8/27/2003 00:00

Component	Top MD (ft)	Btm MD (ft)
FILL	7,140.0	7,203.7

CONDUCTOR CASING — Report Date: 8/8/1951 00:00

Item	OD (in)	Grade	Wt. (ppf)	TopMD (ft)	BtmMD (ft)
CASING JOINT(S)	26.000			10.0	39.0

SURFACE CASING — Report Date: 8/28/1951 00:00

Item	OD (in)	Grade	Wt. (ppf)	TopMD (ft)	BtmMD (ft)
CASING JOINT(S)	16.000	H-40	65.00	10.0	203.0

INTERMEDIATE CASING — Report Date: 9/3/1951 00:00

Item	OD (in)	Grade	Wt. (ppf)	TopMD (ft)	BtmMD (ft)
CASING JOINT(S)	10.750	J-55	45.50	10.0	77.0
CASING JOINT(S)	10.750	J-55	40.50	77.0	2,027.0
CASING JOINT(S)	10.750	J-55	45.50	2,027.0	3,350.0

PRODUCTION CASING — Report Date: 9/26/1951 00:00

Item	OD (in)	Grade	Wt. (ppf)	TopMD (ft)	BtmMD (ft)
CASING JOINT(S)	7.000	N-80	26.00	10.0	47.0
CASING JOINT(S)	7.000	N-80	23.00	47.0	5,802.0
CASING JOINT(S)	7.000	N-80	26.00	5,802.0	7,155.0

LINER — Report Date: 12/7/1994 00:00

Item	OD (in)	Grade	Wt. (ppf)	TopMD (ft)	BtmMD (ft)
LINER HANGER	7.000	N-80	18.00	7,106.3	7,111.5
CASING JOINT(S)	5.000	N-80	18.00	7,111.5	7,157.4
SLOTTED LINER	5.000	N-80	18.00	7,157.4	7,203.7
BULL PLUG	5.000	N-80	18.00	7,203.7	7,205.0

Well: 326-34S S/T/R: 34S/30S/24E

CASING CEMENT DETAIL
- - -
Sfc Csg. Cmt Vol.: 450 sks
Hole Size: 22"
Top Job: no
Rtns to Sfc: yes
TOC: sfc
- - -

Interm Csg. Cmt Vol.: 700 sks
Hole Size: 15"
Top Job: no
Rtns to Sfc: no
TTOC: 1650' per thermometric survey
- - -

Prod. Csg. Cmt Vol.: 500 sks
Hole Size: 9.75"
Top Job: no
Rtns to Sfc: no
TTOC: 4480' per thermometric survey
- - -

Liner Cmt Vol.: none - slotted
Hole Size:
Top Job:
Rtns to Sfc :
TTOC:
- - -
Top of Formation:
UBA: 6797'
BLW: N/A

Volume Behind Pipe:
1.3 Yield Assumed
Theoretical Calculations (TTOC)

Event: WELL MAINT - RIG
Event End: 10/6/2008 00:00
Sec. Reason: SPLIT
End Status: FINISHED - SUCCESS
Well Classification: DEVELOPMENT

OCCIDENTAL OF ELK HILLS INC

326-35S

Ground Level: 789.0ft
Datum: ORIGINAL KB @ 801.00ft (default)
API No.: 0402927773

Wellbore: ORIGINAL HOLE
PBMD: 6,497.0ft
Btm TMD: 7,535.0ft
Spud Date: 6/28/1946 00:00
BH Coord X: 6,151,710.70uss ft
BH Coord Y: 2,288,243.83uss ft

Casing Shoes (ft)	Schematic (10/6/2008)	Openings Top/Btm/Type/Status

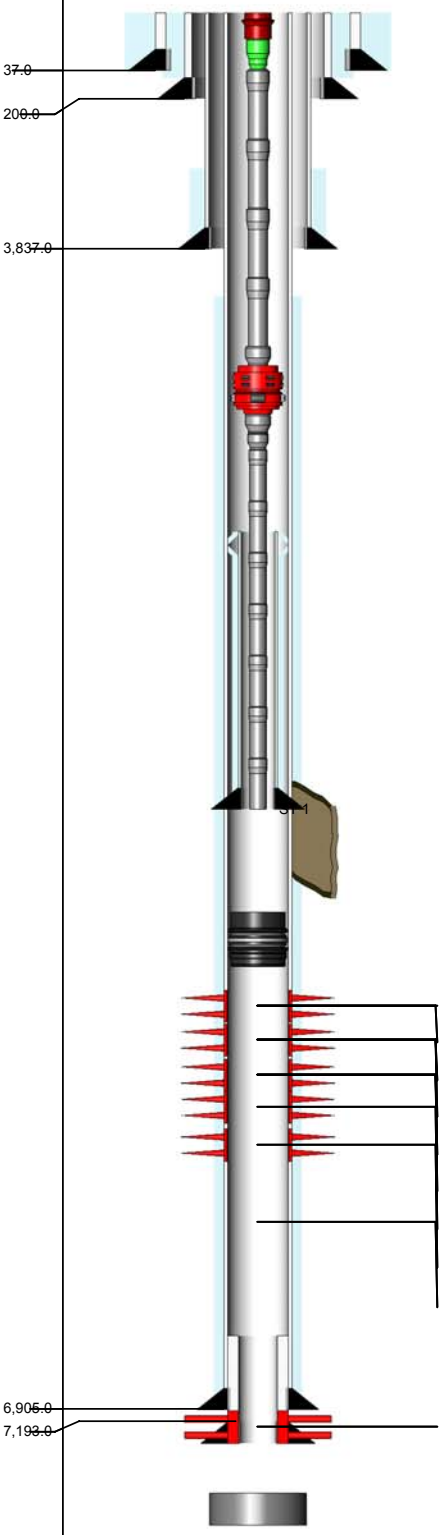

6,660.0ft, 6,668.0ft, REPERFORATED, ABANDONED
6,660.0ft, 6,668.0ft, PERFORATED, ABANDON
6,678.0ft, 6,718.0ft, REPERFORATED, ABANDONED
6,678.0ft, 6,718.0ft, PERFORATED, ABANDON
6,732.0ft, 6,742.0ft, PERFORATED, ABANDON
6,732.0ft, 6,742.0ft, REPERFORATED, ABANDONED
6,742.0ft, 6,743.0ft, PERFORATED, ABANDON
6,768.0ft, 6,769.0ft, PERFORATED, ABANDON
6,768.0ft, 6,858.0ft, PERFORATED, ABANDON
6,908.0ft, 7,195.0ft, SLOTTED, ABANDONED

ROD STRING Report Date: 10/6/2008 00:00

Component	Top MD (ft)	Btm MD (ft)
POLROD	0.0	36.0
PNYROD	36.0	60.0
ROD	60.0	2,760.0
ROD	2,760.0	4,950.0
ROD	4,950.0	7,200.0
RSTBAR	7,200.0	7,204.0
INSPMP	7,204.0	7,228.0

TUBING STRING Report Date: 10/5/2008 00:00

Component	Top MD (ft)	Btm MD (ft)
TH-DBB	12.0	12.7
FATNIP	12.7	13.3
TBGJNT	13.3	5,918.3
XO	5,918.3	5,919.4
AC	5,919.4	5,922.4
XO	5,922.4	5,923.5
XO	5,923.5	5,924.6
TBGJNT	5,924.6	7,220.4
PMPSH	7,220.4	7,221.1
PUPJNT	7,221.1	7,225.2
STCOLL	7,225.2	7,225.6

PLUG BACK Report Date: 6/23/1996 00:00

Component	Top MD (ft)	Btm MD (ft)
BP-DR	6,497.0	6,503.0

PLUG BACK Report Date: 10/8/1947 00:00

Component	Top MD (ft)	Btm MD (ft)
CEMENT	7,200.0	7,535.0

CONDUCTOR CASING Report Date: 6/28/1946 00:00

Item	OD (in)	Grade	Wt. (ppf)	TopMD (ft)	BtmMD (ft)
CASING JOINT(S)	26.000			12.0	37.0

SURFACE CASING Report Date: 6/12/1947 00:00

Item	OD (in)	Grade	Wt. (ppf)	TopMD (ft)	BtmMD (ft)
CASING JOINT(S)	18.625	J-55	98.00	12.0	200.0

INTERMEDIATE CASING Report Date: 7/8/1947 00:00

Item	OD (in)	Grade	Wt. (ppf)	TopMD (ft)	BtmMD (ft)
CASING JOINT(S)	13.375	J-55	68.00	12.0	3,837.0

PRODUCTION CASING Report Date: 10/4/1947 00:00

Item	OD (in)	Grade	Wt. (ppf)	TopMD (ft)	BtmMD (ft)
CASING JOINT(S)	8.625	N-80	44.00	12.0	31.7
CASING JOINT(S)	8.625	N-80	36.00	31.7	4,312.0
CASING JOINT(S)	8.625	N-80	40.00	4,312.0	5,903.6
CASING JOINT(S)	8.625	N-80	44.00	5,903.6	6,905.0

LINER Report Date: 10/11/1947 00:00

Item	OD (in)	Grade	Wt. (ppf)	TopMD (ft)	BtmMD (ft)
LINER HANGER	7.625	J-55		6,861.0	6,864.1
CASING JOINT(S)	5.500	J-55	16.90	6,864.1	6,907.7
SLOTTED LINER	5.500	J-55	16.90	6,907.7	7,195.0

LINER Report Date: 8/4/1996 00:00

Item	OD (in)	Grade	Wt. (ppf)	TopMD (ft)	BtmMD (ft)
TIE BACK	5.000	P-110	18.00	6,066.5	6,079.3
LINER HANGER	7.625	P-110	18.00	6,079.3	6,087.7
CROSSOVER	7.625	P-110	18.00	6,087.7	6,088.5
CASING JOINT(S)	5.000	P-110	18.00	6,088.5	7,338.3
FLOAT COLLAR	5.000	P-110	18.00	7,338.3	7,340.4
CASING JOINT(S)	5.000	P-110	18.00	7,340.4	7,409.6
GUIDE SHOE	5.000	P-110	18.00	7,409.6	7,411.0

Well: 326-35S S/T/R: 35S/30S/24E

CASING CEMENT DETAIL
- - -
Sfc Csg. Cmt Vol.: 250 sks
Hole Size: 24"
Top Job: yes
Rtns to Sfc: no
TTOC: sfc
- - -

Interm Csg. Cmt Vol.: 1200 sks
Hole Size: 17.5"
Top Job: no
Rtns to Sfc: no
TTOC: 1597'
- - -

Prod. Csg. Cmt Vol.: 700 sks
Hole Size: 12.25"
Top Job: no
Rtns to Sfc: no
TTOC: 4850' per Thermometric survey
- - -

Liner Cmt Vol.: none- slotted
Hole Size: 8.625"
Top Job:
Rtns to Sfc:
TTOC:
- - -
Top of Formation:
UBA: 6765'
BLW: 7277'

Volume Behind Pipe:
1.3 Yield Assumed
Theoretical Calculations (TTOC)

Event: WELL MAINT - RIG
Event End: 10/6/2008 00:00
Sec. Reason: SPLIT
End Status: FINISHED - SUCCESS
Well Classification: DEVELOPMENT

OCCIDENTAL OF ELK HILLS INC

326-35S

Ground Level: 789.0ft
Datum: ORIGINAL KB @ 801.00ft (default)
API No.: 0402927773

Wellbore: ST 1
PBMD: 7,338.0ft
Btm TMD: 7,414.0ft
Spud Date: 6/28/1946 00:00
BH Coord X: 6,151,712.83uss ft
BH Coord Y: 2,288,245.37uss ft

Casing Shoes (ft)	Schematic (10/6/2008)	Openings Top/Btm/Type/Status

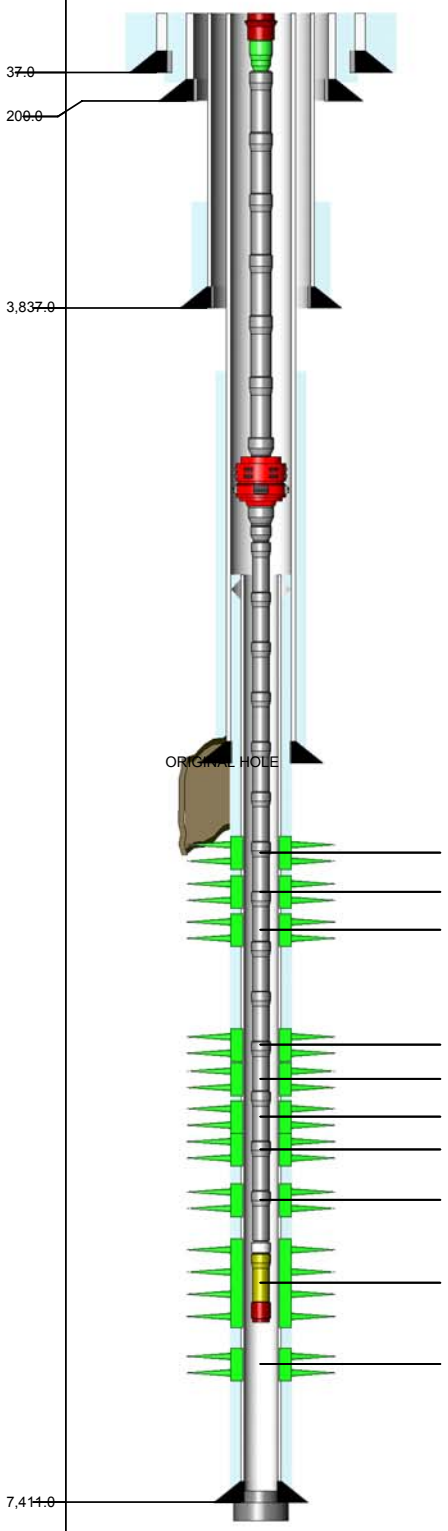

6,628.0ft, 6,684.0ft, PERFORATED, OPEN
6,708.0ft, 6,748.0ft, PERFORATED, OPEN
6,766.0ft, 6,778.0ft, PERFORATED, OPEN
7,058.0ft, 7,090.0ft, PERFORATED, OPEN
7,094.0ft, 7,114.0ft, PERFORATED, OPEN
7,125.0ft, 7,175.0ft, PERFORATED, OPEN
7,175.0ft, 7,185.0ft, PERFORATED, OPEN
7,200.0ft, 7,215.0ft, PERFORATED, OPEN
7,220.0ft, 7,230.0ft, PERFORATED, OPEN
7,247.0ft, 7,260.0ft, PERFORATED, OPEN

ROD STRING Report Date: 10/6/2008 00:00

Component	Top MD (ft)	Btm MD (ft)
POLROD	0.0	36.0
PNYROD	36.0	60.0
ROD	60.0	2,760.0
ROD	2,760.0	4,950.0
ROD	4,950.0	7,200.0
RSTBAR	7,200.0	7,204.0
INSPMP	7,204.0	7,228.0

TUBING STRING Report Date: 10/5/2008 00:00

Component	Top MD (ft)	Btm MD (ft)
TH-DBB	12.0	12.7
FATNIP	12.7	13.3
TBGJNT	13.3	5,918.3
XO	5,918.3	5,919.4
AC	5,919.4	5,922.4
XO	5,922.4	5,923.5
XO	5,923.5	5,924.6
TBGJNT	5,924.6	7,220.4
PMPSH	7,220.4	7,221.1
PUPJNT	7,221.1	7,225.2
STCOLL	7,225.2	7,225.6

PLUG BACK Report Date: 12/6/1996 00:00

Component	Top MD (ft)	Btm MD (ft)
CEMENT	7,338.0	7,411.0

PLUG BACK Report Date: 8/4/1996 00:00

Component	Top MD (ft)	Btm MD (ft)
CEMENT	7,411.0	7,414.0

CONDUCTOR CASING Report Date: 6/28/1946 00:00

Item	OD (in)	Grade	Wt. (ppf)	TopMD (ft)	BtmMD (ft)
CASING JOINT(S)	26.000			12.0	37.0

SURFACE CASING Report Date: 6/12/1947 00:00

Item	OD (in)	Grade	Wt. (ppf)	TopMD (ft)	BtmMD (ft)
CASING JOINT(S)	18.625	J-55	98.00	12.0	200.0

INTERMEDIATE CASING Report Date: 7/8/1947 00:00

Item	OD (in)	Grade	Wt. (ppf)	TopMD (ft)	BtmMD (ft)
CASING JOINT(S)	13.375	J-55	68.00	12.0	3,837.0

PRODUCTION CASING Report Date: 10/4/1947 00:00

Item	OD (in)	Grade	Wt. (ppf)	TopMD (ft)	BtmMD (ft)
CASING JOINT(S)	8.625	N-80	44.00	12.0	31.7
CASING JOINT(S)	8.625	N-80	36.00	31.7	4,312.0
CASING JOINT(S)	8.625	N-80	40.00	4,312.0	5,903.6
CASING JOINT(S)	8.625	N-80	44.00	5,903.6	6,905.0

LINER Report Date: 8/4/1996 00:00

Item	OD (in)	Grade	Wt. (ppf)	TopMD (ft)	BtmMD (ft)
TIE BACK	5.000	P-110	18.00	6,066.5	6,079.3
LINER HANGER	7.625	P-110	18.00	6,079.3	6,087.7
CROSSOVER	7.625	P-110	18.00	6,087.7	6,088.5
CASING JOINT(S)	5.000	P-110	18.00	6,088.5	7,338.3
FLOAT COLLAR	5.000	P-110	18.00	7,338.3	7,340.4
CASING JOINT(S)	5.000	P-110	18.00	7,340.4	7,409.6
GUIDE SHOE	5.000	P-110	18.00	7,409.6	7,411.0

Well: 326-35S-RD1 S/T/R: 35S/30S/24E

CASING CEMENT DETAIL
- - -
Sfc Csg. Cmt Vol.: 250 sks
Hole Size: 24"
Top Job: yes
Rtns to Sfc: no
TTOC: sfc
- - -

Interm Csg. Cmt Vol.: 1200 sks
Hole Size: 17.5"
Top Job: no
Rtns to Sfc: no
TTOC: 1597'
- - -

Prod. Csg. Cmt Vol.: 700 sks
Hole Size: 12.25"
Top Job: no
Rtns to Sfc: no
TTOC: 4850' per Thermometric survey
- - -

Liner Cmt Vol.: 300 cf
Hole Size: 6.75"
Top Job: no
Rtns to Sfc: no
TTOC: TOL
- - -
Top of Formation:
UBA: 6765'
BLW: 7277'

Volume Behind Pipe:
1.3 Yield Assumed
Theoretical Calculations (TTOC)

Event: WELL MAINT - RIGLESS
Event End: 3/23/2009 00:00
Sec. Reason:
End Status: FINISHED - SUCCESS
Well Classification: DEVELOPMENT

OCCIDENTAL OF ELK HILLS INC

326A-35S

Water Depth: 832.0ft
Datum: ORIGINAL KB @ 852.00ft (default)
API No.: 0403029419

Wellbore: ORIGINAL HOLE
PBMD: 7,494.5ft
Btm TMD: 7,586.0ft
Spud Date: 2/16/2006 17:00
BH Coord X: 6,152,141.79uss ft
BH Coord Y: 2,288,350.43uss ft

Casing Shoes (ft)	Schematic (4/1/2009)	Openings Top/Btm/Type/Status

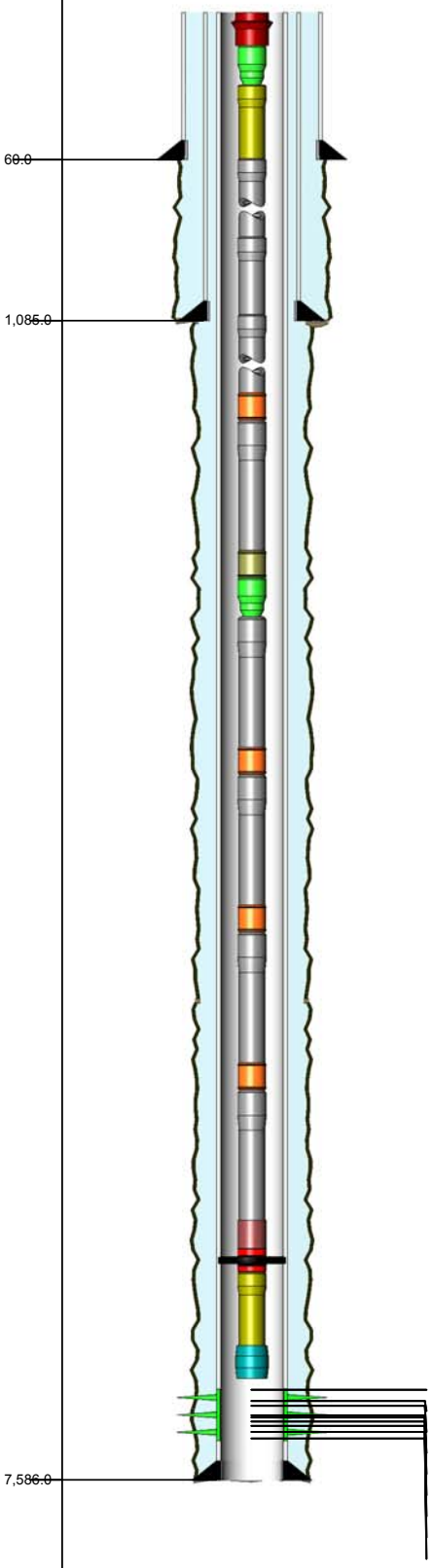

7,124.0ft, 7,140.0ft, PERFORATED, OPEN
7,182.0ft, 7,195.0ft, PERFORATED, OPEN
7,200.0ft, 7,226.0ft, PERFORATED, OPEN
7,252.0ft, 7,268.0ft, PERFORATED, OPEN
7,269.0ft, 7,274.0ft, PERFORATED, OPEN
7,278.0ft, 7,307.0ft, PERFORATED, OPEN
7,310.0ft, 7,318.0ft, PERFORATED, OPEN
7,334.0ft, 7,354.0ft, PERFORATED, OPEN
7,367.0ft, 7,387.0ft, PERFORATED, OPEN

TUBING STRING Report Date: 11/26/2008 00:00

Component	Top MD (ft)	Btm MD (ft)
TH-DBB	20.0	20.6
FATNIP	20.6	21.3
PUPJNT	21.3	33.5
CAS	33.5	2,373.1
GLM-V	2,373.1	2,381.8
TBGJNT	2,381.8	4,181.6
GLM	4,181.6	4,190.0
FATNIP	4,190.0	4,190.7
TBGJNT	4,190.7	5,491.3
GLM-V	5,491.3	5,499.9
CAS	5,499.9	6,382.0
GLM-V	6,382.0	6,390.4
TBGJNT	6,390.4	7,012.2
GLM-V	7,012.2	7,020.7
TBGJNT	7,020.7	7,053.4
ON-OFF	7,053.4	7,054.9
PKR-D	7,054.9	7,059.4
PUPJNT	7,059.4	7,069.6
PRONIP	7,069.6	7,070.9

CONDUCTOR CASING Report Date: 2/9/2006 00:00

Item	OD (in)	Grade	Wt. (ppf)	TopMD (ft)	BtmMD (ft)
CASING JOINT(S)	14.000			20.0	60.0

SURFACE CASING Report Date: 2/17/2006 00:00

Item	OD (in)	Grade	Wt. (ppf)	TopMD (ft)	BtmMD (ft)
CASING JOINT(S)	9.625	K-55	36.00	20.0	1,029.9
	9.625	K-55	36.00	1,029.9	1,029.9
CASING JOINT(S)	9.625	K-55	36.00	1,029.9	1,083.4
	9.625	K-55	36.00	1,083.4	1,085.0

PRODUCTION CASING Report Date: 3/1/2006 00:00

Item	OD (in)	Grade	Wt. (ppf)	TopMD (ft)	BtmMD (ft)
CASING JOINT(S)	7.000	N-80	26.00	20.0	7,001.5
FLAG JOINT	7.000	N-80	26.00	7,001.5	7,021.4
CASING JOINT(S)	7.000	N-80	26.00	7,021.4	7,494.6
	7.000	N-80		7,494.6	7,496.1
CASING JOINT(S)	7.000	N-80	26.00	7,496.1	7,584.3
SHOE JOINT	7.000	N-80		7,584.3	7,586.0

Well: 326A-35S S/T/R: 35S/30S/24E

CASING CEMENT DETAIL
- - -
Sfc Csg. Cmt Vol.: 667 cf
Hole Size: 13.5"
Top Job: no
Rtns to Sfc: 35 bbls
TOC: sfc
- - -

Interm Csg. Cmt Vol.:
Hole Size:
Top Job:
Rtns to Sfc:
TTOC:'
- - -

Prod. Csg. Cmt Vol.: 1258 cf
Hole Size: 8.75"
Top Job: no
Rtns to Sfc: no
TTOC: sfc
- - -

Liner Cmt Vol.:
Hole Size:
Top Job:
Rtns to Sfc:
TTOC:
- - -
Top of Formation:
UBA: 6874'
BLW: 7405'

Volume Behind Pipe:
1.3 Yield Assumed
Theoretical Calculations (TTOC)

Event: ART LIFT REVISION
Event End:
Sec. Reason:
End Status:
Well Classification: DEVELOPMENT

OCCIDENTAL OF ELK HILLS INC

326X-35S

Ground Level: 802.9ft
Datum: ORIGINAL KB @ 823.90ft (default)
API No.: 0403019752

Wellbore: ORIGINAL HOLE
PBMD: 7,360.0ft
Btm TMD: 7,450.0ft
Spud Date: 1/21/2002 00:00
BH Coord X: 6,152,073.54uss ft
BH Coord Y: 2,288,590.37uss ft

Casing Shoes (ft)	Schematic (8/27/2009)	Openings Top/Btm/Type/Status

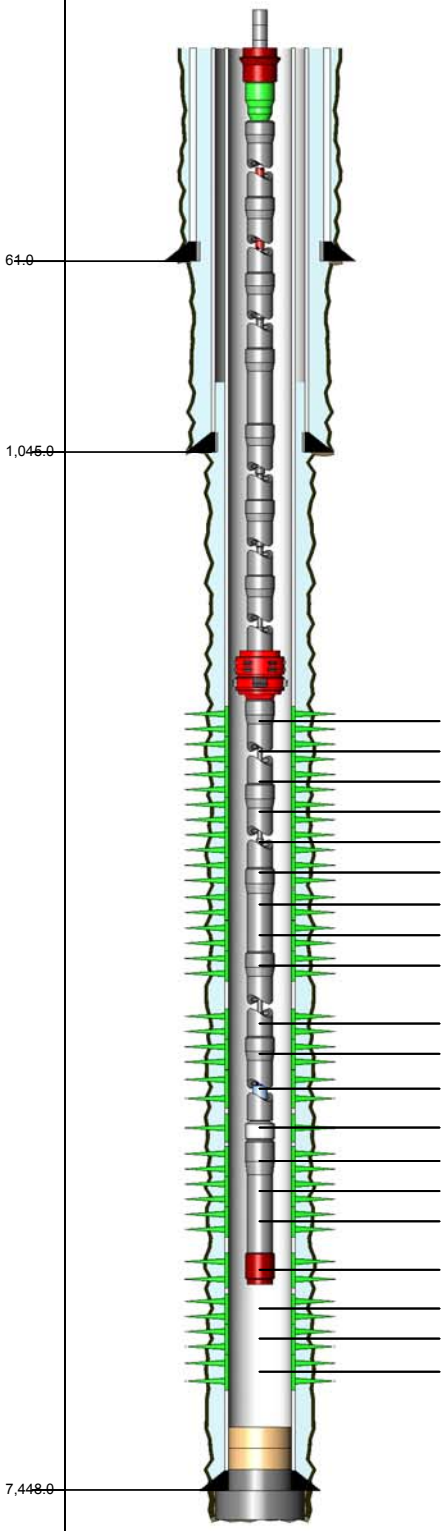

6,687.0ft, 6,691.0ft, PERFORATED, OPEN
6,691.0ft, 6,694.0ft, PERFORATED, OPEN
6,697.0ft, 6,698.0ft, PERFORATED, OPEN
6,698.0ft, 6,702.0ft, PERFORATED, OPEN
6,702.0ft, 6,703.0ft, PERFORATED, OPEN
6,712.0ft, 6,726.0ft, PERFORATED, OPEN
6,785.0ft, 6,800.0ft, PERFORATED, OPEN
6,814.0ft, 6,819.0ft, PERFORATED, OPEN
6,824.0ft, 6,844.0ft, PERFORATED, OPEN
7,112.0ft, 7,120.0ft, PERFORATED, OPEN
7,128.0ft, 7,150.0ft, PERFORATED, OPEN
7,158.0ft, 7,190.0ft, PERFORATED, OPEN
7,196.0ft, 7,208.0ft, PERFORATED, OPEN
7,214.0ft, 7,217.0ft, PERFORATED, OPEN
7,217.0ft, 7,221.0ft, PERFORATED, OPEN
7,221.0ft, 7,224.0ft, PERFORATED, OPEN
7,236.0ft, 7,242.0ft, PERFORATED, OPEN
7,250.0ft, 7,271.0ft, PERFORATED, OPEN
7,271.0ft, 7,276.0ft, PERFORATED, OPEN
7,276.0ft, 7,296.0ft, PERFORATED, OPEN

ROD STRING Report Date: 6/12/2009 00:00

Component	Top MD (ft)	Btm MD (ft)
POLROD	0.0	36.0
PNYROD	36.0	54.0
ROD	54.0	1,584.0
ROD	1,584.0	3,864.0
ROD	3,864.0	7,164.0
RSTBAR	7,164.0	7,167.0
INSPMP	7,167.0	7,198.0

TUBING STRING Report Date: 6/12/2009 00:00

Component	Top MD (ft)	Btm MD (ft)
TH-DBB	21.0	21.7
FATNIP	21.7	22.3
CAS	22.3	6,389.5
AC	6,389.5	6,391.8
CAS	6,391.8	7,204.0
PMPSH	7,204.0	7,204.7
CAS	7,204.7	7,236.2
STCOLL	7,236.2	7,236.6

PLUG BACK Report Date: 12/3/2003 00:00

Component	Top MD (ft)	Btm MD (ft)
FILL	7,320.0	7,324.0

PLUG BACK Report Date: 6/15/2002 00:00

Component	Top MD (ft)	Btm MD (ft)
FILL	7,324.0	7,359.0

PLUG BACK Report Date: 2/22/2002 00:00

Component	Top MD (ft)	Btm MD (ft)
CEMENT	7,359.0	7,448.0

PLUG BACK Report Date: 2/6/2002 00:00

Component	Top MD (ft)	Btm MD (ft)
CEMENT	7,448.0	7,450.0

CONDUCTOR CASING Report Date: 1/15/2002 00:00

Item	OD (in)	Grade	Wt. (ppf)	TopMD (ft)	BtmMD (ft)
CASING JOINT(S)	14.000			21.0	61.0

SURFACE CASING Report Date: 1/23/2002 00:00

Item	OD (in)	Grade	Wt. (ppf)	TopMD (ft)	BtmMD (ft)
CASING JOINT(S)	9.625	K-55	36.00	21.0	998.4
	9.625			998.4	998.4
CASING JOINT(S)	9.625	K-55	36.00	998.4	1,043.9
GUIDE SHOE	9.625			1,043.9	1,045.0

PRODUCTION CASING Report Date: 2/5/2002 00:00

Item	OD (in)	Grade	Wt. (ppf)	TopMD (ft)	BtmMD (ft)
CASING JOINT(S)	7.000	N-80	26.00	21.0	6,850.3
FLAG JOINT	7.000	N-80	26.00	6,850.3	6,872.9
CASING JOINT(S)	7.000	N-80	26.00	6,872.9	7,276.2
CROSSOVER	7.000	N-80	26.00	7,276.2	7,302.4
CASING JOINT(S)	7.000	N-80	26.00	7,302.4	7,350.0
FLOAT COLLAR	7.000	N-80	26.00	7,350.0	7,351.5
CASING JOINT(S)	7.000	N-80	26.00	7,351.5	7,446.4
FLOAT SHOE	7.000	N-80	26.00	7,446.4	7,448.0

Well: 326X-35S S/T/R: 35S/30S/24E

CASING CEMENT DETAIL
- - -
Sfc Csg. Cmt Vol.: 644 cf
Hole Size: 12.25"
Top Job: no
Rtns to Sfc: 8 bbls
TOC: sfc
- - -

Interm Csg. Cmt Vol.:
Hole Size:
Top Job:
Rtns to Sfc:
TTOC:'
- - -

Prod. Csg. Cmt Vol.: 1620 cf
Hole Size: 8.75"
Top Job: no
Rtns to Sfc: no
TTOC: sfc
- - -

Liner Cmt Vol.:
Hole Size:
Top Job:
Rtns to Sfc:
TTOC:
- - -
Top of Formation:
UBA: 6835'
BLW: 7343'

Volume Behind Pipe:
1.3 Yield Assumed
Theoretical Calculations (TTOC)

OCCIDENTAL OF ELK HILLS INC

327-34S

Event: WELL ENHANCEMENT
Event End: 8/29/2008 00:00
Sec. Reason:

Ground Level: 928.0ft
Datum: ORIGINAL KB @ 948.00ft (default)
API No.: 0402984186

Wellbore: ORIGINAL HOLE
PBMD: 7,350.0ft
Btm TMD: 7,596.0ft
Spud Date: 5/14/1989 00:00
BH Coord X: 6,146,550.00uss ft
BH Coord Y: 2,287,942.00uss ft

Casing Shoes (ft) | Schematic (9/1/2008) | Openings Top/Btm/Type/Status

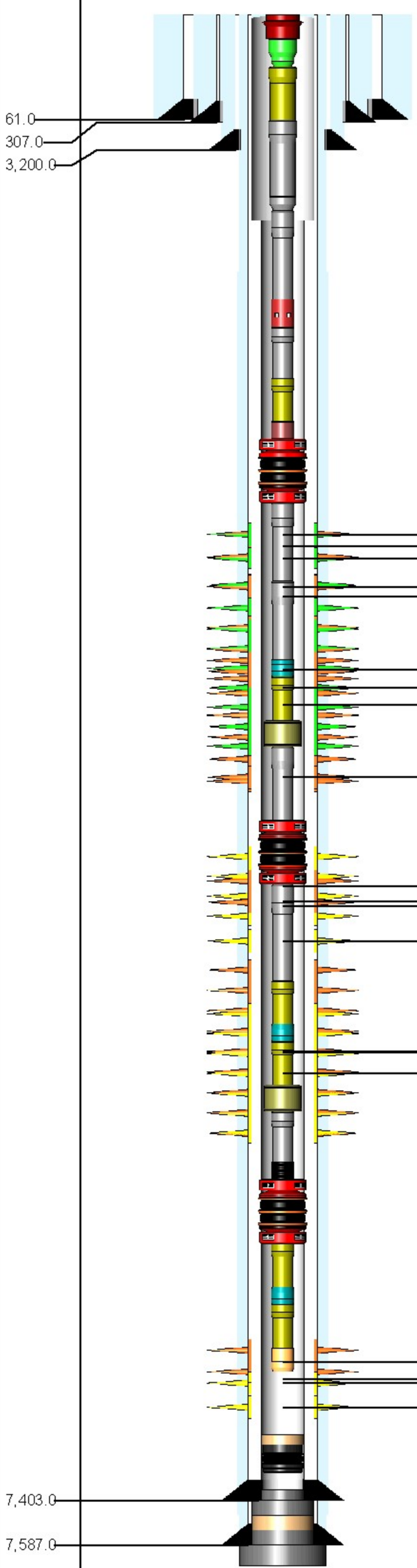

6,801.0ft, 6,822.0ft, PERFORATED, OPEN
6,800.0ft, 6,885.0ft, PERFORATED, SQUE
6,827.0ft, 6,887.0ft, PERFORATED, OPEN
6,905.0ft, 6,944.0ft, PERFORATED, SQUE
6,900.0ft, 6,974.0ft, PERFORATED, OPEN
7,000.1ft, 7,010.1ft, PERFORATED, SQUE
6,974.0ft, 7,030.0ft, PERFORATED, OPEN
6,970.0ft, 7,040.0ft, PERFORATED, SQUE
7,036.1ft, 7,038.1ft, PERFORATED, SQUE
7,058.0ft, 7,104.0ft, PERFORATED, ISOLA
7,072.1ft, 7,082.1ft, PERFORATED, SQUE
7,060.0ft, 7,130.0ft, PERFORATED, SQUE
7,110.0ft, 7,148.0ft, PERFORATED, ISOLA
7,150.0ft, 7,193.0ft, PERFORATED, SQUE
7,150.1ft, 7,193.1ft, PERFORATED, SQUE
7,160.0ft, 7,193.0ft, PERFORATED, ISOLA
7,217.1ft, 7,230.1ft, PERFORATED, SQUE
7,217.0ft, 7,290.0ft, PERFORATED, SQUE
7,220.0ft, 7,241.0ft, PERFORATED, ISOLA
7,248.1ft, 7,290.1ft, PERFORATED, ISOLA
7,248.2ft, 7,290.2ft, PERFORATED, ISOLA

TUBING STRING Report Date: 9/20/2002 00:00

Component	Top MD (ft)	Btm MD (ft)
TH-DBB	20.0	20.6
FATNIP	20.6	22.0
PUPJNT	22.0	40.1
TBGJNT	40.1	6,419.6
XO	6,419.6	6,420.7
TBGJNT	6,420.7	6,703.7
SS-C	6,703.7	6,706.3
TBGJNT	6,706.3	6,737.8
PUPJNT	6,737.8	6,747.8
ON-OFF	6,747.8	6,749.3
PKR-S	6,749.3	6,754.7
TBGJNT	6,754.7	7,006.5
PNIP-O	7,006.5	7,007.6
PUPJNT	7,007.6	7,017.6
GLM-D	7,017.6	7,024.3
TBGJNT	7,024.3	7,055.8
PKR-S	7,055.8	7,061.2
TBGJNT	7,061.2	7,155.7
PUPJNT	7,155.7	7,163.8
PNIP-O	7,163.8	7,164.8
PUPJNT	7,164.8	7,174.9
GLM-D	7,174.9	7,181.6
TBGJNT	7,181.6	7,199.9
SA	7,199.9	7,200.9

PACKER ASSEMBLY (PERMANENT) Report Date: 9/19/2002 00:00

Component	Top MD (ft)	Btm MD (ft)
PKR-S	7,200.9	7,210.2
PUPJNT	7,210.2	7,214.3
PNIP-C	7,214.3	7,215.4
PUPJNT	7,215.4	7,217.4
WLREG	7,217.4	7,217.8

PLUG BACK Report Date: 9/14/2004 00:00

Component	Top MD (ft)	Btm MD (ft)
FILL	7,326.0	7,350.0

PLUG BACK Report Date: 5/9/2001 00:00

Component	Top MD (ft)	Btm MD (ft)
BP-DR	7,350.0	7,352.1

PLUG BACK Report Date: 11/7/1994 00:00

Component	Top MD (ft)	Btm MD (ft)
CEMENT	7,356.0	7,403.0

PLUG BACK Report Date: 11/4/1994 00:00

Component	Top MD (ft)	Btm MD (ft)
CEMENT	7,403.0	7,445.0

PLUG BACK Report Date: 11/1/1994 00:00

Component	Top MD (ft)	Btm MD (ft)
FILL	7,445.0	7,500.0

PLUG BACK Report Date: 9/6/1989 00:00

Component	Top MD (ft)	Btm MD (ft)
CEMENT	7,500.0	7,587.0

PLUG BACK Report Date: 7/13/1989 00:00

Component	Top MD (ft)	Btm MD (ft)
CEMENT	7,587.0	7,596.0

CONDUCTOR CASING Report Date: 5/14/1989 00:00

Item	OD (in)	Grade	Wt. (ppf)	TopMD (ft)	BtmMD (ft)
CASING JOINT(S)	20.000			20.0	61.0

SURFACE CASING Report Date: 6/12/1989 00:00

Item	OD (in)	Grade	Wt. (ppf)	TopMD (ft)	BtmMD (ft)
CASING JOINT(S)	13.375	H-40	48.00	20.0	307.0

INTERMEDIATE CASING Report Date: 6/19/1989 00:00

Item	OD (in)	Grade	Wt. (ppf)	TopMD (ft)	BtmMD (ft)
CASING JOINT(S)	9.625	K-55	40.00	20.0	3,200.0

PRODUCTION CASING Report Date: 7/13/1989 00:00

Item	OD (in)	Grade	Wt. (ppf)	TopMD (ft)	BtmMD (ft)
CASING JOINT(S)	7.000	N-80	23.00	20.0	1,776.5
CASING JOINT(S)	7.000	K-55	23.00	1,776.5	5,173.2
CASING JOINT(S)	7.000	K-55	26.00	5,173.2	5,935.3
FLAG JOINT	7.000	K-55	26.00	5,935.3	5,954.8
CASING JOINT(S)	7.000	N-80	26.00	5,954.8	6,076.7
CASING JOINT(S)	7.000	N-80	29.00	6,076.7	6,766.2
FLAG JOINT	7.000	N-80	29.00	6,766.2	6,787.8
CASING JOINT(S)	7.000	N-80	29.00	6,787.8	7,500.2
FLOAT COLLAR	7.000	N-80	29.00	7,500.2	7,502.2
CASING JOINT(S)	7.000	N-80	29.00	7,502.2	7,585.1
FLOAT SHOE	7.000	N-80	29.00	7,585.1	7,587.0

INNER LINER Report Date: 11/4/1994 00:00

Item	OD (in)	Grade	Wt. (ppf)	TopMD (ft)	BtmMD (ft)
LINER HANGER	7.000	N-80	18.00	6,474.1	6,481.6
CASING JOINT(S)	5.000	N-80	18.00	6,481.6	7,356.6
FLOAT COLLAR	5.000	N-80	18.00	7,356.6	7,357.9
CASING JOINT(S)	5.000	N-80	18.00	7,357.9	7,401.6
GUIDE SHOE	5.000	N-80	18.00	7,401.6	7,403.0

Well: 327-34S S/T/R: 34S/30S/24E

CASING CEMENT DETAIL
- - -
Sfc Csg. Cmt Vol.: 500 cf
Hole Size: 17.5"
Top Job: No
Rtns to Sfc: 63 cf
TOC: Sfc
- - -

Interm Csg. Cmt Vol.: 1885 cf
Hole Size: 12.25"
Top Job: No
Rtns to Sfc: 180 cf
TOC: Sfc
- - -

Prod. Csg. Cmt Vol.: 1950 cf
Hole Size: 8.75"
Top Job: No
Rtns to Sfc:
TTOC: Sfc

Liner Cmt Vol.: 100 cf
Hole Size: 6"
Top Job: No
Rtns to Sfc: No
TTOC: 6467'
- - -
Top of Formation:
UBA: 5383'
BLW: 7315'

Volume Behind Pipe:
1.3 Yield Assumed
Theoretical Calculations (TTOC)

Event: WELL MAINT - RIGLESS
Event End: 5/9/2008 00:00
Sec. Reason:
End Status: FINISHED - SUCCESS
Well Classification: INJECTION

OCCIDENTAL OF ELK HILLS INC

327-35S

Ground Level: 817.0ft
Datum: ORIGINAL KB @ 833.99ft (default)
API No.: 0402979521

Wellbore: ORIGINAL HOLE
PBMD: 6,733.0ft
Btm TMD: 7,577.0ft
Spud Date: 1/6/1987 00:00
BH Coord X: 6,151,874.58uss ft
BH Coord Y: 2,287,751.47uss ft

Casing Shoes (ft) | Schematic (6/1/2008) | Openings Top/Btm/Type/Status

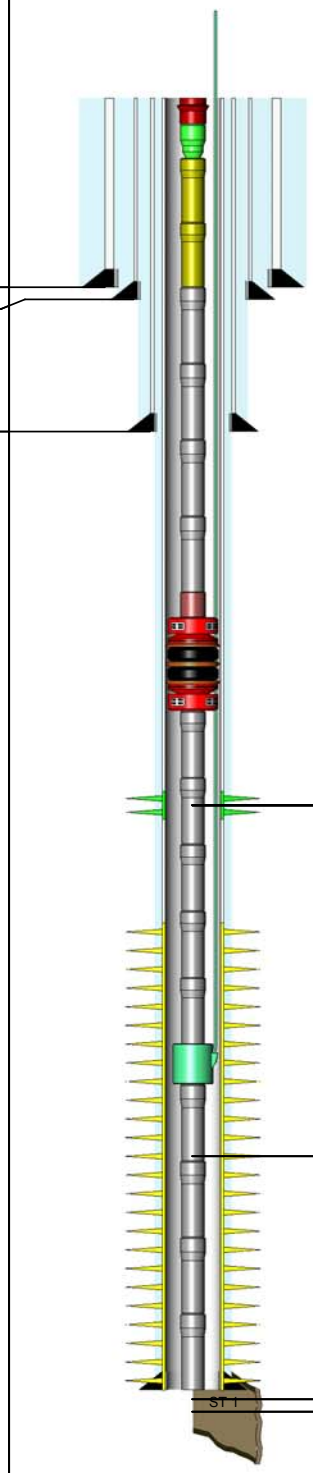

6,665.0ft, 6,672.0ft, PERFORATED, OPI
6,665.0ft, 6,672.0ft, PERFORATED, OPI
6,690.0ft, 6,735.0ft, PERFORATED, ISO
6,755.0ft, 6,805.0ft, PERFORATED, ISO
6,830.0ft, 6,853.0ft, PERFORATED, ISO

TUBING STRING Report Date: 10/22/2003 00:00

Component	Top MD (ft)	Btm MD (ft)
TH-DBB	17.0	17.6
FATNIP	17.6	18.3
PUPJNT	18.3	28.4
PUPJNT	28.4	38.5
TBGJNT	38.5	6,641.5
ON-OFF	6,641.5	6,642.9
PKR-S	6,642.9	6,648.4
TBGJNT	6,648.4	6,711.1
INJM-V	6,711.1	6,720.3
TBGJNT	6,720.3	6,814.5
PKR-S	6,814.5	6,820.0
TBGJNT	6,820.0	6,882.7
INJM-D	6,882.7	6,892.0
PUPJNT	6,892.0	6,895.7
TBGJNT	6,895.7	7,084.1
PNIP-O	7,084.1	7,085.3
TBGJNT	7,085.3	7,116.2
SA	7,116.2	7,116.6

CONDUCTOR CASING Report Date: 1/6/1987 00:00

Item	OD (in)	Grade	Wt. (ppf)	TopMD (ft)	BtmMD (ft)
CASING JOINT(S)	20.000			17.0	57.0

SURFACE CASING Report Date: 2/4/1987 00:00

Item	OD (in)	Grade	Wt. (ppf)	TopMD (ft)	BtmMD (ft)
CASING JOINT(S)	13.375	H-40	48.00	17.0	317.0

INTERMEDIATE CASING Report Date: 2/10/1987 00:00

Item	OD (in)	Grade	Wt. (ppf)	TopMD (ft)	BtmMD (ft)
CASING JOINT(S)	9.625	K-55	40.00	17.0	3,171.0

PRODUCTION CASING Report Date: 3/23/1987 00:00

Item	OD (in)	Grade	Wt. (ppf)	TopMD (ft)	BtmMD (ft)
CASING JOINT(S)	7.000	N-80	26.00	17.0	75.8
CASING JOINT(S)	7.000	K-55	23.00	75.8	4,879.9
CASING JOINT(S)	7.000	K-55	26.00	4,879.9	6,525.2
CASING JOINT(S)	7.000	N-80	26.00	6,525.2	6,836.6
FLAG JOINT	7.000	N-80	26.00	6,836.6	6,861.8
CASING JOINT(S)	7.000	N-80	26.00	6,861.8	8,540.0
FLOAT COLLAR	7.000	N-80	26.00	8,540.0	8,542.1
CASING JOINT(S)	7.000	N-80	26.00	8,542.1	8,632.8
FLOAT SHOE	7.000	N-80	26.00	8,632.8	8,635.0

Well: 327-35S S/T/R: 35S/30S/24E

CASING CEMENT DETAIL
- - -
Sfc Csg. Cmt Vol.: 493 cf
Hole Size: 17.5"
Top Job: no
Rtns to Sfc: 40 cf
TOC: sfc
- - -

Interm Csg. Cmt Vol.: 1443 cf
Hole Size: 12.25"
Top Job: no
Rtns to Sfc: 23 cf
TOC: sfc
- - -

Prod. Csg. Cmt Vol.: 1900 cf
Hole Size: 8.75"
Top Job: no
Rtns to Sfc: no
TTOC: sfc
- - -

Liner Cmt Vol.:
Hole Size:
Top Job:
Rtns to Sfc:
TTOC:
- - -
Top of Formation:
UBA: N/A
BLW: N/A

Volume Behind Pipe:
1.3 Yield Assumed
Theoretical Calculations (TTOC)

Event: WELL MAINT - RIGLESS
Event End: 5/9/2008 00:00
Sec. Reason:
End Status: FINISHED - SUCCESS
Well Classification: INJECTION

OCCIDENTAL OF ELK HILLS INC

327-35S

Ground Level: 817.0ft
Datum: ORIGINAL KB @ 833.99ft (default)
API No.: 0402979521

Wellbore: ST 1
PBMD: 7,371.0ft
Btm TMD: 8,700.0ft
Spud Date: 1/6/1987 00:00
BH Coord X: 6,151,787.20uss ft
BH Coord Y: 2,287,618.92uss ft

Casing Shoes (ft)	Schematic (6/1/2008)	Openings Top/Btm/Type/Status
57.0		
317.0		
3,171.0		
		6,665.0ft, 6,672.0ft, PERFORATED, OPEN
		6,665.0ft, 6,672.0ft, PERFORATED, OPEN
		6,690.0ft, 6,735.0ft, PERFORATED, ISOLATE
	ORIGINAL HOLE	
		6,750.0ft, 6,755.0ft, PERFORATED, OPEN
		6,853.0ft, 6,922.0ft, PERFORATED, ISOLATE
		6,947.0ft, 6,962.0ft, PERFORATED, SQUEEZ
		6,987.0ft, 7,038.0ft, PERFORATED, SQUEEZ
		7,058.0ft, 7,105.0ft, PERFORATED, SQUEEZ
		7,127.0ft, 7,224.0ft, PERFORATED, SQUEEZ
		7,140.0ft, 7,224.0ft, PERFORATED, OPEN
		7,280.0ft, 7,281.0ft, PERFORATED, OPEN
		7,290.0ft, 7,291.0ft, PERFORATED, OPEN
		7,255.0ft, 7,345.0ft, PERFORATED, SQUEEZ
		7,255.1ft, 7,345.1ft, REPERFORATED, OPEN
		7,300.0ft, 7,301.0ft, PERFORATED, OPEN
		7,310.0ft, 7,311.0ft, PERFORATED, OPEN
		7,320.0ft, 7,321.0ft, PERFORATED, OPEN
		7,330.0ft, 7,331.0ft, PERFORATED, OPEN
		7,340.0ft, 7,341.0ft, PERFORATED, OPEN
		7,345.0ft, 7,346.0ft, PERFORATED, OPEN
		7,415.0ft, 7,480.0ft, PERFORATED, ISOLATE
		7,530.0ft, 7,575.0ft, PERFORATED, ISOLATE
		7,605.0ft, 7,685.0ft, PERFORATED, ISOLATE
		7,952.0ft, 8,045.0ft, PERFORATED, ISOLATE
		8,075.0ft, 8,120.0ft, PERFORATED, ISOLATE
		8,432.0ft, 8,535.0ft, REPERFORATED, ISOLA
		8,432.0ft, 8,535.0ft, PERFORATED, ISOLATE
8,635.0		

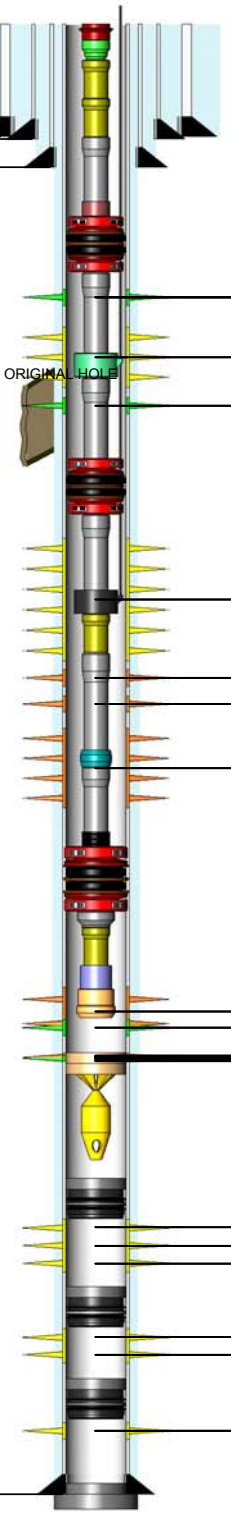

TUBING STRING — Report Date: 10/22/2003 00:00

Component	Top MD (ft)	Btm MD (ft)
TH-DBB	17.0	17.6
FATNIP	17.6	18.3
PUPJNT	18.3	28.4
PUPJNT	28.4	38.5
TBGJNT	38.5	6,641.5
ON-OFF	6,641.5	6,642.9
PKR-S	6,642.9	6,648.4
TBGJNT	6,648.4	6,711.1
INJM-V	6,711.1	6,720.3
TBGJNT	6,720.3	6,814.5
PKR-S	6,814.5	6,820.0
TBGJNT	6,820.0	6,882.7
INJM-D	6,882.7	6,892.0
PUPJNT	6,892.0	6,895.7
TBGJNT	6,895.7	7,084.1
PNIP-O	7,084.1	7,085.3
TBGJNT	7,085.3	7,116.2
SA	7,116.2	7,116.6

PACKER ASSEMBLY (PERMANENT) — Report Date: 3/5/2002 00:00

Component	Top MD (ft)	Btm MD (ft)
PKR-S	7,116.5	7,119.1
XO	7,119.1	7,119.6
PUPJNT	7,119.6	7,125.6
NOGO-O	7,125.6	7,127.1
WLREG	7,127.1	7,127.5

PLUG BACK — Report Date: 11/17/2003 00:00

Component	Top MD (ft)	Btm MD (ft)
FILL	7,243.0	7,371.0

PLUG BACK — Report Date: 6/12/2002 00:00

Component	Top MD (ft)	Btm MD (ft)
FILL	7,371.0	7,377.0

PLUG BACK — Report Date: 7/30/1997 00:00

Component	Top MD (ft)	Btm MD (ft)
JUNK	7,377.0	7,380.0

PLUG BACK — Report Date: 8/7/1987 00:00

Component	Top MD (ft)	Btm MD (ft)
CEMENT	7,390.0	7,400.0
BP-DR	7,400.0	7,403.0

PLUG BACK — Report Date: 8/1/1987 00:00

Component	Top MD (ft)	Btm MD (ft)
CEMENT	7,890.0	7,900.0
BP-DR	7,900.0	7,903.0

PLUG BACK — Report Date: 7/10/1987 00:00

Component	Top MD (ft)	Btm MD (ft)
CEMENT	8,390.0	8,400.0
BP-DR	8,400.0	8,403.0

PLUG BACK — Report Date: 5/10/1987 00:00

Component	Top MD (ft)	Btm MD (ft)
CEMENT	8,550.0	8,635.0

PLUG BACK — Report Date: 3/23/1987 00:00

Component	Top MD (ft)	Btm MD (ft)
CEMENT	8,635.0	8,700.0

CONDUCTOR CASING — Report Date: 1/6/1987 00:00

Item	OD (in)	Grade	Wt. (ppf)	TopMD (ft)	BtmMD (ft)
CASING JOINT(S)	20.000			17.0	57.0

SURFACE CASING — Report Date: 2/4/1987 00:00

Item	OD (in)	Grade	Wt. (ppf)	TopMD (ft)	BtmMD (ft)
CASING JOINT(S)	13.375	H-40	48.00	17.0	317.0

INTERMEDIATE CASING — Report Date: 2/10/1987 00:00

Item	OD (in)	Grade	Wt. (ppf)	TopMD (ft)	BtmMD (ft)
CASING JOINT(S)	9.625	K-55	40.00	17.0	3,171.0

PRODUCTION CASING — Report Date: 3/23/1987 00:00

Item	OD (in)	Grade	Wt. (ppf)	TopMD (ft)	BtmMD (ft)
CASING JOINT(S)	7.000	N-80	26.00	17.0	75.8
CASING JOINT(S)	7.000	K-55	23.00	75.8	4,879.9
CASING JOINT(S)	7.000	K-55	26.00	4,879.9	6,525.2
CASING JOINT(S)	7.000	N-80	26.00	6,525.2	6,836.6
FLAG JOINT	7.000	N-80	26.00	6,836.6	6,861.8
CASING JOINT(S)	7.000	N-80	26.00	6,861.8	8,540.0
FLOAT COLLAR	7.000	N-80	26.00	8,540.0	8,542.1
CASING JOINT(S)	7.000	N-80	26.00	8,542.1	8,632.8
FLOAT SHOE	7.000	N-80	26.00	8,632.8	8,635.0

Well: 327-35S S/T/R: 35S/30S/24E

CASING CEMENT DETAIL
- - -
Sfc Csg. Cmt Vol.: 493 cf
Hole Size: 17.5"
Top Job: no
Rtns to Sfc: 40 cf
TOC: sfc
- - -

Interm Csg. Cmt Vol.: 1443 cf
Hole Size: 12.25"
Top Job: no
Rtns to Sfc: 23 cf
TOC: sfc
- - -

Prod. Csg. Cmt Vol.: 1900 cf
Hole Size: 8.75"
Top Job: no
Rtns to Sfc: no
TTOC: sfc
- - -

Liner Cmt Vol.:
Hole Size:
Top Job:
Rtns to Sfc:
TTOC:
- - -
Top of Formation:
UBA: 6819'
BLW: 7345'

Volume Behind Pipe:
1.3 Yield Assumed
Theoretical Calculations (TTOC)

Event: WELL MAINT - RIGLESS
Event End: 5/22/2008 00:00
Sec. Reason:
End Status: FINISHED - SUCCESS
Well Classification: DEVELOPMENT - CLASS III

OCCIDENTAL OF ELK HILLS INC

327A-35S

Water Depth: 863.9ft
Datum: ORIGINAL KB @ 883.90ft (default)
API No.: 0403029251

Wellbore: ORIGINAL HOLE
PBMD: 7,518.0ft
Btm TMD: 7,598.0ft
Spud Date: 6/4/2006 11:00
BH Coord X: 6,151,513.89uss ft
BH Coord Y: 2,287,755.01uss ft

Casing Shoes (ft)	Schematic (6/1/2008)	Openings Top/Btm/Type/Status

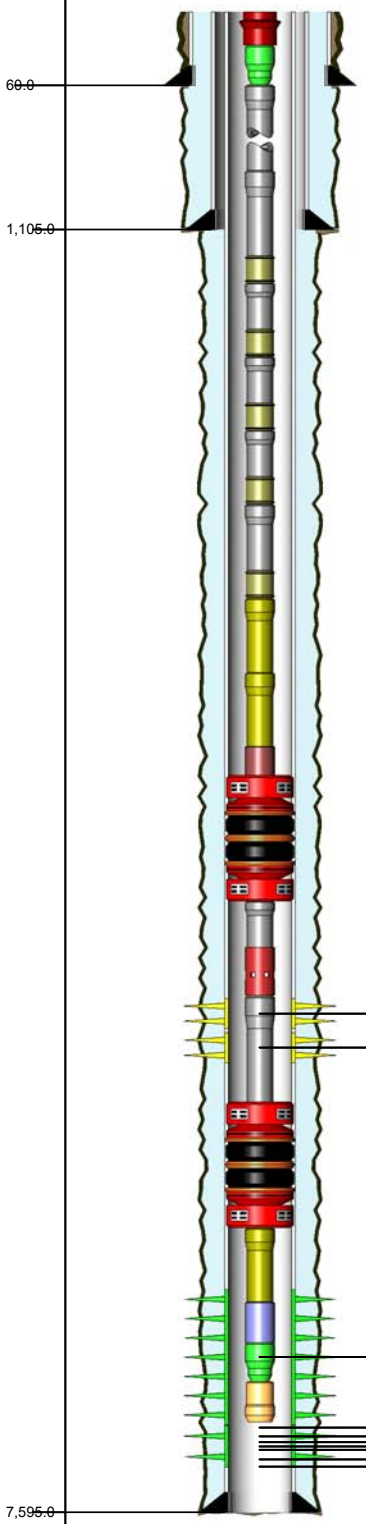

7,012.0ft, 7,060.0ft, PERFORATED, ISOLATE
7,066.0ft, 7,118.0ft, PERFORATED, ISOLATE
7,136.0ft, 7,155.0ft, PERFORATED, OPEN
7,160.0ft, 7,180.0ft, PERFORATED, OPEN
7,190.0ft, 7,238.0ft, PERFORATED, OPEN
7,238.0ft, 7,248.0ft, PERFORATED, OPEN
7,256.0ft, 7,273.0ft, PERFORATED, OPEN
7,277.0ft, 7,287.0ft, PERFORATED, OPEN
7,305.0ft, 7,355.0ft, PERFORATED, OPEN
7,364.0ft, 7,368.0ft, PERFORATED, OPEN

TUBING STRING Report Date: 8/9/2006 00:00

Component	Top MD (ft)	Btm MD (ft)
TH-DBB	20.0	20.6
FATNIP	20.6	21.3
CAS	21.3	2,410.2
GLM	2,410.2	2,418.7
CAS	2,418.7	4,205.9
GLM	4,205.9	4,214.5
CAS	4,214.5	5,399.6
GLM	5,399.6	5,408.2
CAS	5,408.2	6,305.5
GLM	6,305.5	6,314.0
CAS	6,314.0	6,934.8
GLM	6,934.8	6,943.4
PUPJNT	6,943.4	6,951.0
PUPJNT	6,951.0	6,960.9
ON-OFF	6,960.9	6,962.6
PKR	6,962.6	6,968.5
CAS	6,968.5	6,999.2
SS-C	6,999.2	7,003.3
CAS	7,003.3	7,127.2
PKR	7,127.2	7,131.0
PUPJNT	7,131.0	7,137.0
NOGO	7,137.0	7,138.4
FATNIP	7,138.4	7,139.5
WLREG	7,139.5	7,140.0

CONDUCTOR CASING Report Date: 5/23/2006 00:00

Item	OD (in)	Grade	Wt. (ppf)	TopMD (ft)	BtmMD (ft)
CASING JOINT(S)	14.000			20.0	60.0

SURFACE CASING Report Date: 6/6/2006 00:00

Item	OD (in)	Grade	Wt. (ppf)	TopMD (ft)	BtmMD (ft)
CASING JOINT(S)	9.625	K-55	36.00	20.0	145.8
CASING JOINT(S)	9.625	K-55	36.00	145.8	1,060.1
	9.625	K-55	36.00	1,060.1	1,060.1
CASING JOINT(S)	9.625	K-55	36.00	1,060.1	1,103.8
GUIDE SHOE	9.625	K-55	36.00	1,103.8	1,105.0

PRODUCTION CASING Report Date: 6/21/2006 00:00

Item	OD (in)	Grade	Wt. (ppf)	TopMD (ft)	BtmMD (ft)
CASING JOINT(S)	7.000	N-80	26.00	20.0	6,910.8
FLAG JOINT	7.000	N-80	26.00	6,910.8	6,930.4
CASING JOINT(S)	7.000	N-80	26.00	6,930.4	7,517.7
FLOAT COLLAR	7.000	N-80	26.00	7,517.7	7,519.2
CASING JOINT(S)	7.000	N-80	26.00	7,519.2	7,593.3
FLOAT SHOE	7.000	N-80	26.00	7,593.3	7,595.0

Well: 327A-35S S/T/R: 35S/30S/24E

CASING CEMENT DETAIL
- - -
Sfc Csg. Cmt Vol.: 671 cf
Hole Size: 13.625"
Top Job: no
Rtns to Sfc: 4 bbls
TOC: sfc
- - -

Interm Csg. Cmt Vol.:
Hole Size:
Top Job:
Rtns to Sfc:
TTOC:'
- - -

Prod. Csg. Cmt Vol.: 2209 cf
Hole Size: 8.75"
Top Job: no
Rtns to Sfc: no
TTOC: sfc
- - -

Liner Cmt Vol.:
Hole Size:
Top Job:
Rtns to Sfc:
TTOC:
- - -
Top of Formation:
UBA: 6855'
BLW: 7388'

Volume Behind Pipe:
1.3 Yield Assumed
Theoretical Calculations (TTOC)

Event: WELL MAINT - RIGLESS
Event End: 4/27/2009 00:00
Sec. Reason:
End Status: FINISHED - SUCCESS
Well Classification: DEVELOPMENT

OCCIDENTAL OF ELK HILLS INC

327X-35S

Ground Level: 832.1ft
Datum: ORIGINAL KB @ 853.10ft (default)
API No.: 0403019753

Wellbore: ORIGINAL HOLE
PBMD: 7,433.0ft
Btm TMD: 7,545.0ft
Spud Date: 3/11/2002 00:00
BH Coord X: 6,152,248.90uss ft
BH Coord Y: 2,288,009.05uss ft

Casing Shoes (ft)	Schematic (5/1/2009)	Openings Top/Btm/Type/Status

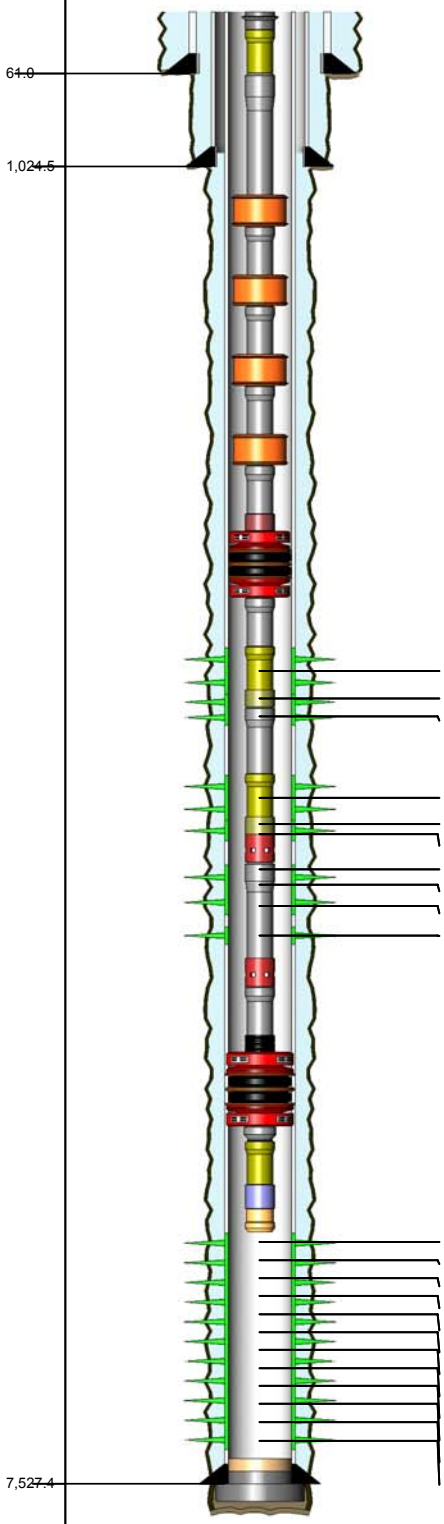

6,720.0ft, 6,735.0ft, PERFORATED, OPEN
6,735.0ft, 6,745.0ft, PERFORATED, OPEN
6,750.0ft, 6,776.0ft, PERFORATED, OPEN
6,781.0ft, 6,787.0ft, PERFORATED, OPEN
6,787.0ft, 6,791.0ft, PERFORATED, OPEN
6,791.0ft, 6,796.0ft, PERFORATED, OPEN
6,806.0ft, 6,830.0ft, PERFORATED, OPEN
6,842.0ft, 6,862.0ft, PERFORATED, OPEN
6,876.0ft, 6,888.0ft, PERFORATED, OPEN
6,905.0ft, 6,920.0ft, PERFORATED, OPEN
7,132.0ft, 7,154.0ft, PERFORATED, OPEN
7,162.0ft, 7,183.0ft, PERFORATED, OPEN
7,183.5ft, 7,185.0ft, PERFORATED, OPEN
7,185.0ft, 7,195.0ft, PERFORATED, OPEN
7,207.0ft, 7,214.0ft, PERFORATED, OPEN
7,214.0ft, 7,221.0ft, PERFORATED, OPEN
7,221.0ft, 7,250.0ft, PERFORATED, OPEN
7,255.0ft, 7,260.0ft, PERFORATED, OPEN
7,260.0ft, 7,270.0ft, PERFORATED, OPEN
7,270.0ft, 7,287.0ft, PERFORATED, OPEN
7,295.0ft, 7,315.0ft, PERFORATED, OPEN
7,322.0ft, 7,330.0ft, PERFORATED, OPEN

TUBING STRING — Report Date: 12/4/2003 00:00

Component	Top MD (ft)	Btm MD (ft)
TH-SGL	21.0	21.6
PUPJNT	21.6	34.1
TBGJNT	34.1	2,317.0
GLM-V	2,317.0	2,325.5
TBGJNT	2,325.5	4,208.0
GLM-V	4,208.0	4,216.9
TBGJNT	4,216.9	5,660.4
GLM-V	5,660.4	5,668.9
TBGJNT	5,668.9	6,642.1
GLM-V	6,642.1	6,651.0
TBGJNT	6,651.0	6,682.4
ON-OFF	6,682.4	6,683.8
PKR-S	6,683.8	6,687.9
TBGJNT	6,687.9	6,719.6
PUPJNT	6,719.6	6,729.6
BJ	6,729.6	6,749.5
TBGJNT	6,749.5	6,780.8
PUPJNT	6,780.8	6,784.8
BJ	6,784.8	6,794.9
SS-C	6,794.9	6,799.2
TBGJNT	6,799.2	6,924.9
SS-C	6,924.9	6,929.2
TBGJNT	6,929.2	7,085.1
SA	7,085.1	7,085.6
PKR-S	7,085.6	7,091.0
XO	7,091.0	7,091.7
PUPJNT	7,091.7	7,097.7
NOGO-O	7,097.7	7,099.1
WLREG	7,099.1	7,099.6

PLUG BACK — Report Date: 12/3/2003 00:00

Component	Top MD (ft)	Btm MD (ft)
FILL	7,412.0	7,432.8

PLUG BACK — Report Date: 4/11/2002 00:00

Component	Top MD (ft)	Btm MD (ft)
CEMENT	7,432.8	7,527.4

PLUG BACK — Report Date: 3/24/2002 00:00

Component	Top MD (ft)	Btm MD (ft)
CEMENT	7,527.4	7,545.0

CONDUCTOR CASING — Report Date: 2/25/2002 00:00

Item	OD (in)	Grade	Wt. (ppf)	TopMD (ft)	BtmMD (ft)
CASING JOINT(S)	14.000			21.0	61.0

SURFACE CASING — Report Date: 3/12/2002 00:00

Item	OD (in)	Grade	Wt. (ppf)	TopMD (ft)	BtmMD (ft)
CASING JOINT(S)	9.625	K-55	36.00	21.0	977.0
	9.625	K-55	36.00	977.0	977.0
CASING JOINT(S)	9.625	K-55	36.00	977.0	1,023.4
GUIDE SHOE	9.625	K-55	36.00	1,023.4	1,024.5

PRODUCTION CASING — Report Date: 3/24/2002 00:00

Item	OD (in)	Grade	Wt. (ppf)	TopMD (ft)	BtmMD (ft)
CASING JOINT(S)	7.000	N-80	26.00	21.0	6,828.8
FLAG JOINT	7.000	P-110	26.00	6,828.8	6,853.6
CASING JOINT(S)	7.000	N-80	26.00	6,853.6	7,432.8
FLOAT COLLAR	7.000		26.00	7,432.8	7,434.2
CASING JOINT(S)	7.000	N-80	26.00	7,434.2	7,525.9
FLOAT SHOE	7.000		26.00	7,525.9	7,527.4

Well: 327X-35S S/T/R: 35S/30S/24E

CASING CEMENT DETAIL
- - -
Sfc Csg. Cmt Vol.: 643 cf
Hole Size: 12.25"
Top Job: no
Rtns to Sfc: 15 bbls
TOC: sfc
- - -

Interm Csg. Cmt Vol.:
Hole Size:
Top Job:
Rtns to Sfc:
TTOC:'
- - -

Prod. Csg. Cmt Vol.: 1293 cf
Hole Size: 8.75"
Top Job: no
Rtns to Sfc: yes
TTOC: sfc
- - -

Liner Cmt Vol.:
Hole Size:
Top Job:
Rtns to Sfc:
TTOC:
- - -
Top of Formation:
UBA: 6864'
BLW: 7377'

Volume Behind Pipe:
1.3 Yield Assumed
Theoretical Calculations (TTOC)

Event: WELL MAINT - RIGLESS
Event End:
Sec. Reason:
End Status:
Well Classification: DEVELOPMENT

OCCIDENTAL OF ELK HILLS INC

328X-34S

Ground Level: 965.0ft
Datum: ORIGINAL KB @ 987.00ft (default)
API No.: 0403029197

Wellbore: Original Hole
PBMD: 6,165.0ft
Btm TMD: 6,392.0ft
Spud Date: 3/1/2006 21:00
BH Coord X: 6,146,325.78uss ft
BH Coord Y: 2,287,363.20uss ft

Casing Shoes (ft)	Schematic (5/1/2008)	Openings Top/Btm/Type/Status

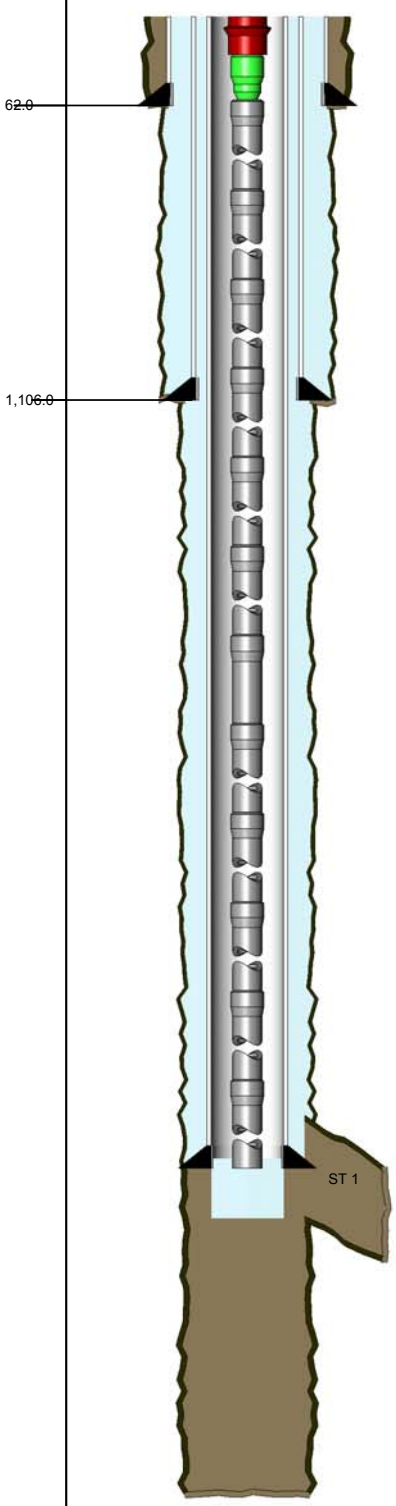

TUBING STRING Report Date: 4/11/2008 00:00

Component	Top MD (ft)	Btm MD (ft)
TH-DBB	22.0	22.7
FATNIP	22.7	23.3
CAS	23.3	6,733.8
WBEQP	6,733.8	6,734.2

CONDUCTOR CASING Report Date: 2/27/2006 00:00

Item	OD (in)	Grade	Wt. (ppf)	TopMD (ft)	BtmMD (ft)
CASING JOINT(S)	14.000			22.0	62.0

SURFACE CASING Report Date: 3/2/2006 00:00

Item	OD (in)	Grade	Wt. (ppf)	TopMD (ft)	BtmMD (ft)
CASING JOINT(S)	9.625	K-55	36.00	22.0	1,069.2
	9.625			1,069.2	1,069.2
CASING JOINT(S)	9.625	K-55	36.00	1,069.2	1,104.9
CASING GUIDE SHOE	9.625			1,104.9	1,106.0

PRODUCTION CASING Report Date: 3/23/2006 00:00

Item	OD (in)	Grade	Wt. (ppf)	TopMD (ft)	BtmMD (ft)
CASING JOINT(S)	7.000	N-80	26.00	22.0	6,718.2
FLAG JOINT	7.000	N-80	26.00	6,718.2	6,730.2
CASING JOINT(S)	7.000	N-80	26.00	6,730.2	7,471.4
FLOAT COLLAR	7.000			7,471.4	7,473.0
CASING JOINT(S)	7.000	N-80	26.00	7,473.0	7,563.3
FLOAT SHOE	7.000			7,563.3	7,565.0

PLUG BACK INFORMATION:

Drilled to 6392'.
Fish at bottom of 9.875" hole.
Pumped 150 CF "G" cmt.
Cleaned out to 6165'
and kicked off ST1.

Well: 328X-34S S/T/R: 34S/30S/24E

CASING CEMENT DETAIL
- - -
Sfc Csg. Cmt Vol.: 1060 cf
Hole Size: 13.5"
Top Job: no
Rtns to Sfc: 45 bbls
TOC: sfc
- - -

Interm Csg. Cmt Vol.:
Hole Size:
Top Job:
Rtns to Sfc:
TTOC:
- - -

Prod. Csg. Cmt Vol.:
Hole Size:
Top Job:
Rtns to Sfc:
TTOC:
- - -

Liner Cmt Vol.:
Hole Size:
Top Job:
Rtns to Sfc :
TTOC:
- - -
Top of Formation:
UBA: 6867'
BLW: 7405'

Volume Behind Pipe:
1.3 Yield Assumed
Theoretical Calculations (TTOC)

OCCIDENTAL OF ELK HILLS INC

328-34S

Event: WELL MAINT - RIG
Event End: 7/24/2009 00:00
Sec. Reason: SPLIT

Ground Level: 973.0ft
Datum: ORIGINAL KB @ 987.00ft (default)
API No.: 0402954413

Wellbore: ORIGINAL HOLE
PBMD: 5,981.0ft
Btm TMD: 8,000.0ft
Spud Date: 12/1/1976 00:00
BH Coord X: 6,146,188.90uss ft
BH Coord Y: 2,287,119.40uss ft

Casing Shoes (ft) | Schematic (8/1/2009) | Openings Top/Btm/Type/Status

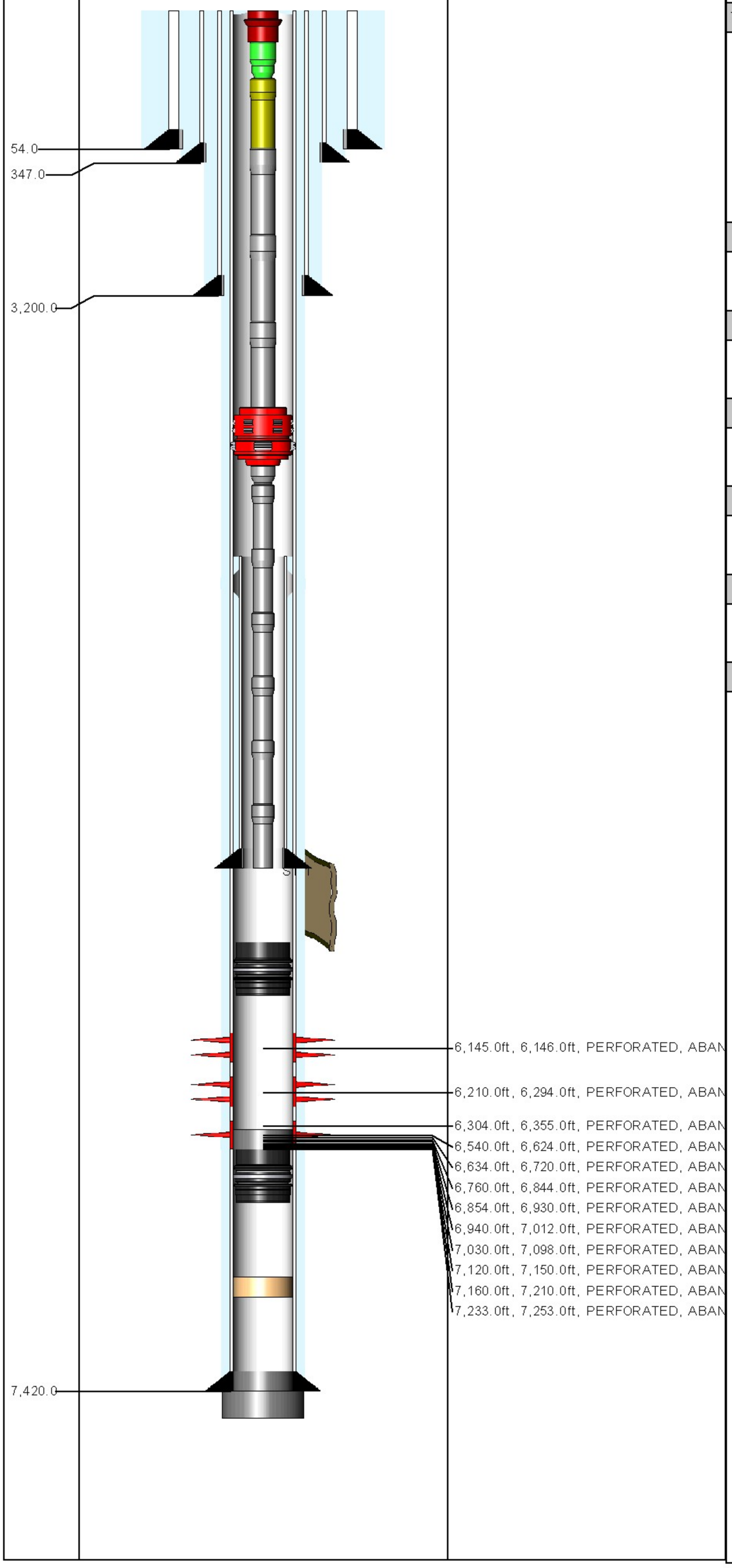

ROD STRING Report Date: 7/23/2009 00:00

Component	Top MD (ft)	Btm MD (ft)
POLRDL	0.0	36.0
R-4PER	36.0	2,766.0
R-4PER	2,766.0	5,496.0
R-5PER	5,496.0	5,886.0
R-6PER	5,886.0	6,696.0
RSTBAR	6,696.0	6,699.0
INSPMP	6,699.0	6,723.0

TUBING STRING Report Date: 7/22/2009 00:00

Component	Top MD (ft)	Btm MD (ft)
TH-DBB	14.0	15.0
FATNIP	15.0	15.6
PUPJNT	15.6	26.0
TBGJNT	26.0	5,612.4
AC	5,612.4	5,614.4
XO	5,614.4	5,615.5
TBGJNT	5,615.5	6,711.3
STNIP	6,711.3	6,712.4
TBGJNT	6,712.4	6,743.8
STCOLL	6,743.8	6,744.2

PLUG BACK Report Date: 8/2/2001 00:00

Component	Top MD (ft)	Btm MD (ft)
BP-DR	5,981.0	5,984.0

PLUG BACK Report Date: 7/31/2001 00:00

Component	Top MD (ft)	Btm MD (ft)
CEMENT	6,310.0	7,275.0

PLUG BACK Report Date: 9/22/1990 00:00

Component	Top MD (ft)	Btm MD (ft)
BP-DR	7,275.0	7,277.0

PLUG BACK Report Date: 9/19/1990 00:00

Component	Top MD (ft)	Btm MD (ft)
FILL	7,290.0	7,319.0

PLUG BACK Report Date: 4/19/1977 00:00

Component	Top MD (ft)	Btm MD (ft)
CEMENT	7,370.0	7,420.0

PLUG BACK Report Date: 4/18/1977 00:00

Component	Top MD (ft)	Btm MD (ft)
CEMENT	7,420.0	8,000.0

CONDUCTOR CASING Report Date: 12/1/1976 00:00

Item	OD (in)	Grade	Wt. (ppf)	TopMD (ft)	BtmMD (ft)
CASING JOINT(S)	20.000			14.0	54.0

SURFACE CASING Report Date: 3/24/1977 00:00

Item	OD (in)	Grade	Wt. (ppf)	TopMD (ft)	BtmMD (ft)
CASING JOINT(S)	13.375	H-40	48.00	14.0	347.0

INTERMEDIATE CASING Report Date: 3/29/1977 00:00

Item	OD (in)	Grade	Wt. (ppf)	TopMD (ft)	BtmMD (ft)
CASING JOINT(S)	9.625	K-55	40.00	14.0	3,200.0

PRODUCTION CASING Report Date: 4/18/1977 00:00

Item	OD (in)	Grade	Wt. (ppf)	TopMD (ft)	BtmMD (ft)
CASING JOINT(S)	7.000	K-55	26.00	14.0	83.1
CASING JOINT(S)	7.000	K-55	23.00	83.1	4,561.0
CASING JOINT(S)	7.000	K-55	26.00	4,561.0	6,484.2
FLAG JOINT	7.000	K-55	26.00	6,484.2	6,495.6
CASING JOINT(S)	7.000	K-55	26.00	6,495.6	7,371.8
FLOAT COLLAR	7.000	K-55	26.00	7,371.8	7,374.4
CASING JOINT(S)	7.000	K-55	26.00	7,374.4	7,417.4
FLOAT SHOE	7.000	K-55	26.00	7,417.4	7,420.0

LINER Report Date: 8/26/2001 00:00

Item	OD (in)	Grade	Wt. (ppf)	TopMD (ft)	BtmMD (ft)
TIE BACK RECEPTACLE	5.000			5,731.0	5,742.4
LINER HANGER	7.000			5,742.4	5,749.8
LINER HANGER LANDING COLLAR	7.000			5,749.8	5,751.5
LINER HANGER	7.000			5,751.5	5,758.1
CROSSOVER	7.000			5,758.1	5,760.6
CASING JOINT(S)	5.000	L-80	18.00	5,760.6	7,421.7
LANDING COLLAR	5.000			7,421.7	7,421.7
	5.000			7,421.7	7,421.7
CASING JOINT(S)	5.000	L-80	18.00	7,421.7	7,514.0
FLOAT SHOE	5.000			7,514.0	7,515.8

Well: 328-34S S/T/R: 34S/30S/24E

CASING CEMENT DETAIL
- - -
Sfc Csg. Cmt Vol.: 388 cf
Hole Size: 17.5"
Top Job: No
Rtns to Sfc: Trace
TOC: Sfc
- - -

Interm Csg. Cmt Vol.: 1753 cf
Hole Size: 12.25"
Top Job: No
Rtns to Sfc: 300 cf
TOC: Sfc
- - -

Prod. Csg. Cmt Vol.: 1900 cf
Hole Size: 8.75"
Top Job: No
Rtns to Sfc:
TTOC: Sfc

Liner Cmt Vol.:
Hole Size:
Top Job:
Rtns to Sfc:
TTOC:
- - -
Top of Formation:
UBA: 6834'
BLW: 7365'

Volume Behind Pipe:
1.3 Yield Assumed
Theoretical Calculations (TTOC)

OCCIDENTAL OF ELK HILLS INC

328-34S

Event: WELL MAINT - RIG
Event End: 7/24/2009 00:00
Sec. Reason: SPLIT

Ground Level: 973.0ft
Datum: ORIGINAL KB @ 987.00ft (default)
API No.: 0402954413

Wellbore: ST 1
PBMD: 6,790.0ft
Btm TMD: 7,520.0ft
Spud Date: 12/1/1976 00:00
BH Coord X: 6,146,149.67uss ft
BH Coord Y: 2,287,113.63uss ft

Casing Shoes (ft) | Schematic (8/1/2009) | Openings Top/Btm/Type/Status

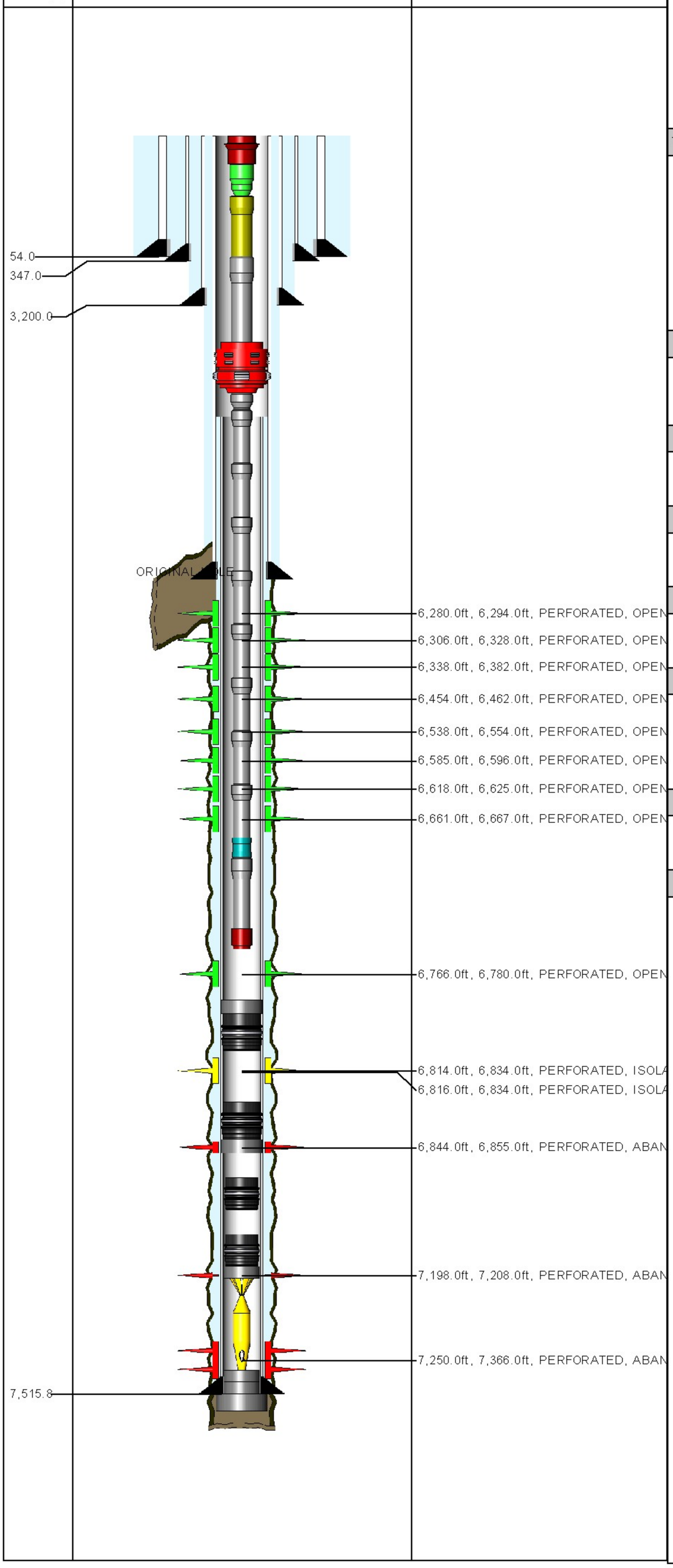

ROD STRING Report Date: 7/23/2009 00:00

Component	Top MD (ft)	Btm MD (ft)
POLRDL	0.0	36.0
R-4PER	36.0	2,766.0
R-4PER	2,766.0	5,496.0
R-5PER	5,496.0	5,886.0
R-6PER	5,886.0	6,696.0
RSTBAR	6,696.0	6,699.0
INSPMP	6,699.0	6,723.0

TUBING STRING Report Date: 7/22/2009 00:00

Component	Top MD (ft)	Btm MD (ft)
TH-DBB	14.0	15.0
FATNIP	15.0	15.6
PUPJNT	15.6	26.0
TBGJNT	26.0	5,612.4
AC	5,612.4	5,614.4
XO	5,614.4	5,615.5
TBGJNT	5,615.5	6,711.3
STNIP	6,711.3	6,712.4
TBGJNT	6,712.4	6,743.8
STCOLL	6,743.8	6,744.2

PLUG BACK Report Date: 7/27/2004 00:00

Component	Top MD (ft)	Btm MD (ft)
CEMENT	6,790.0	6,802.0
CR-PRM	6,802.0	6,805.0

PLUG BACK Report Date: 6/15/2004 00:00

Component	Top MD (ft)	Btm MD (ft)
CR-PRM	6,839.0	6,842.0

PLUG BACK Report Date: 6/16/2004 00:00

Component	Top MD (ft)	Btm MD (ft)
CEMENT	6,842.0	6,855.0

PLUG BACK Report Date: 4/10/2002 00:00

Component	Top MD (ft)	Btm MD (ft)
BP-DR	6,900.0	6,902.5

PLUG BACK Report Date: 4/10/2002 00:00

Component	Top MD (ft)	Btm MD (ft)
CR-PRM	7,110.0	7,112.0
CEMENT	7,112.0	7,237.0
JUNK	7,237.0	7,256.0
CEMENT	7,256.0	7,410.0

PLUG BACK Report Date: 9/7/2001 00:00

Component	Top MD (ft)	Btm MD (ft)
CEMENT	7,410.0	7,515.8

PLUG BACK Report Date: 8/26/2001 00:00

Component	Top MD (ft)	Btm MD (ft)
CEMENT	7,515.8	7,520.0

CONDUCTOR CASING Report Date: 12/1/1976 00:00

Item	OD (in)	Grade	Wt. (ppf)	TopMD (ft)	BtmMD (ft)
CASING JOINT(S)	20.000			14.0	54.0

SURFACE CASING Report Date: 3/24/1977 00:00

Item	OD (in)	Grade	Wt. (ppf)	TopMD (ft)	BtmMD (ft)
CASING JOINT(S)	13.375	H-40	48.00	14.0	347.0

INTERMEDIATE CASING Report Date: 3/29/1977 00:00

Item	OD (in)	Grade	Wt. (ppf)	TopMD (ft)	BtmMD (ft)
CASING JOINT(S)	9.625	K-55	40.00	14.0	3,200.0

PRODUCTION CASING Report Date: 4/18/1977 00:00

Item	OD (in)	Grade	Wt. (ppf)	TopMD (ft)	BtmMD (ft)
CASING JOINT(S)	7.000	K-55	26.00	14.0	83.1
CASING JOINT(S)	7.000	K-55	23.00	83.1	4,561.0
CASING JOINT(S)	7.000	K-55	26.00	4,561.0	6,484.2
FLAG JOINT	7.000	K-55	26.00	6,484.2	6,495.6
CASING JOINT(S)	7.000	K-55	26.00	6,495.6	7,371.8
FLOAT COLLAR	7.000	K-55	26.00	7,371.8	7,374.4
CASING JOINT(S)	7.000	K-55	26.00	7,374.4	7,417.4
FLOAT SHOE	7.000	K-55	26.00	7,417.4	7,420.0

LINER Report Date: 8/26/2001 00:00

Item	OD (in)	Grade	Wt. (ppf)	TopMD (ft)	BtmMD (ft)
TIE BACK RECEPTACLE	5.000			5,731.0	5,742.4
LINER HANGER	7.000			5,742.4	5,749.8
LINER HANGER LANDING COLLAR	7.000			5,749.8	5,751.5
LINER HANGER	7.000			5,751.5	5,758.1
CROSSOVER	7.000			5,758.1	5,760.6
CASING JOINT(S)	5.000	L-80	18.00	5,760.6	7,421.7
LANDING COLLAR	5.000			7,421.7	7,421.7
	5.000			7,421.7	7,421.7
CASING JOINT(S)	5.000	L-80	18.00	7,421.7	7,514.0
FLOAT SHOE	5.000			7,514.0	7,515.8

Well: 328-34S-RD1 S/T/R: 34S/30S/24E

CASING CEMENT DETAIL
- - -
Sfc Csg. Cmt Vol.: 388 cf
Hole Size: 17.5"
Top Job: No
Rtns to Sfc: Trace
TOC: Sfc
- - -

Interm Csg. Cmt Vol.: 1753 cf
Hole Size: 12.25"
Top Job: No
Rtns to Sfc: 300 cf
TOC: Sfc
- - -

Prod. Csg. Cmt Vol.: 1900 cf
Hole Size: 8.75"
Top Job: No
Rtns to Sfc:
TTOC: Sfc

RD1 Liner Cmt Vol.: 168 cf
Hole Size: 6.125"
Top Job: No
Rtns to Sfc: No
TTOC: 5731'
- - -
Top of Formation:
UBA: 6843'
BLW: 7383'

Volume Behind Pipe:
1.3 Yield Assumed
Theoretical Calculations (TTOC)

Event: WELL MAINT - RIG
Event End: 5/26/2007 00:00
Sec. Reason: COLLAR LEAK
End Status: FINISHED - SUCCESS
Well Classification: DEVELOPMENT

OCCIDENTAL OF ELK HILLS INC

328-35S

Ground Level: 820.0ft
Datum: ORIGINAL KB @ 829.00ft (default)
API No.: 0402927774

Wellbore: ORIGINAL HOLE
PBMD: 6,329.0ft
Btm TMD: 6,300.0ft
Spud Date: 8/2/1950 00:00
BH Coord X: 6,151,790.50uss ft
BH Coord Y: 2,286,844.10uss ft

Casing Shoes (ft)	Schematic (6/1/2007)	Openings Top/Btm/Type/Status

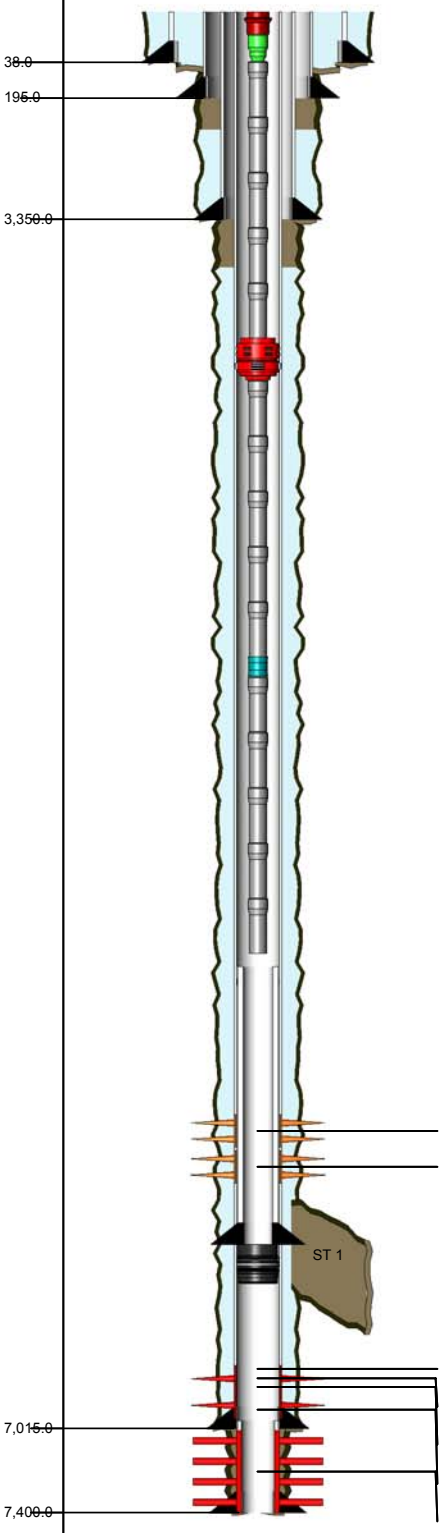

6,180.0ft, 6,181.0ft, PERFORATED, SQUEEZ
6,190.0ft, 6,191.0ft, PERFORATED, SQUEEZ
6,727.0ft, 6,760.0ft, PERFORATED, ABANDO
6,770.0ft, 6,803.0ft, PERFORATED, ABANDO
6,815.0ft, 6,837.0ft, PERFORATED, ABANDO
6,890.0ft, 6,970.0ft, PERFORATED, ABANDO
7,024.4ft, 7,399.7ft, SLOTTED, ABANDONED

ROD STRING Report Date: 5/26/2007 00:00

Component	Top MD (ft)	Btm MD (ft)
POLROD	0.0	36.0
PNYROD	36.0	54.0
ROD	54.0	1,854.0
R-4PER	1,854.0	2,454.0
ROD	2,454.0	5,964.0
RSTBAR	5,964.0	5,968.0
INSPMP	5,968.0	5,992.0

TUBING STRING Report Date: 5/26/2007 00:00

Component	Top MD (ft)	Btm MD (ft)
TH-DBB	9.0	9.8
FATNIP	9.8	10.4
TBGJNT	10.4	5,854.8
AC	5,854.8	5,857.2
TBGJNT	5,857.2	5,982.7
STNIP	5,982.7	5,983.8
TBGJNT	5,983.8	6,015.3

PLUG BACK Report Date: 7/11/1996 00:00

Component	Top MD (ft)	Btm MD (ft)
BP-DR	6,349.0	6,352.0

CONDUCTOR CASING Report Date: 8/2/1950 00:00

Item	OD (in)	Grade	Wt. (ppf)	TopMD (ft)	BtmMD (ft)
CASING JOINT(S)	26.000			9.0	38.0

SURFACE CASING Report Date: 9/16/1950 00:00

Item	OD (in)	Grade	Wt. (ppf)	TopMD (ft)	BtmMD (ft)
CASING JOINT(S)	16.000		65.00	9.0	195.0

INTERMEDIATE CASING Report Date: 9/20/1950 00:00

Item	OD (in)	Grade	Wt. (ppf)	TopMD (ft)	BtmMD (ft)
CASING JOINT(S)	10.750	J-55	45.50	9.0	77.2
CASING JOINT(S)	10.750	J-55	40.50	77.2	2,609.5
CASING JOINT(S)	10.750	J-55	45.50	2,609.5	3,350.0

PRODUCTION CASING Report Date: 10/13/1950 00:00

Item	OD (in)	Grade	Wt. (ppf)	TopMD (ft)	BtmMD (ft)
CASING JOINT(S)	7.000	N-80	26.00	9.0	28.3
CASING JOINT(S)	7.000	N-80	23.00	28.3	5,713.6
CASING JOINT(S)	7.000	N-80	26.00	5,713.6	7,015.0

LINER Report Date: 10/24/1950 00:00

Item	OD (in)	Grade	Wt. (ppf)	TopMD (ft)	BtmMD (ft)
LINER HANGER	6.276	J-55	20.00	6,979.0	6,981.8
CASING JOINT(S)	5.500	N-80	20.00	6,981.8	7,024.4
SLOTTED LINER	5.500	J-55	19.87	7,024.4	7,399.7
GUIDE SHOE	5.500	J-55	20.00	7,399.7	7,400.0

LINER Report Date: 7/19/1996 00:00

Item	OD (in)	Grade	Wt. (ppf)	TopMD (ft)	BtmMD (ft)
TIE BACK	5.875	P-110	18.00	6,053.2	6,066.4
LINER HANGER	6.276	P-110	18.00	6,066.4	6,073.8
CASING JOINT(S)	5.000	P-110	18.00	6,073.8	7,439.3
FLOAT COLLAR	5.000	P-110	18.00	7,439.3	7,441.3
CASING JOINT(S)	5.000	P-110	18.00	7,441.3	7,507.6
FLOAT SHOE	5.000	P-110	18.00	7,507.6	7,509.0

Well: 328-35S S/T/R: 35S/30S/24E

CASING CEMENT DETAIL
- - -
Sfc Csg. Cmt Vol.: 450 sks
Hole Size: 22"
Top Job: no
Rtns to Sfc: yes
TOC: sfc
- - -

Interm Csg. Cmt Vol.: 650 sks
Hole Size: 15"
Top Job: no
Rtns to Sfc: no
TTOC: 1544' per thermometric survey
- - -

Prod. Csg. Cmt Vol.: 500 sks
Hole Size: 9.75"
Top Job: no
Rtns to Sfc: no
TTOC: 4360' per thermometric survey
- - -

Liner Cmt Vol.: none - slotted
Hole Size: 6.25"
Top Job:
Rtns to Sfc:
TTOC:
- - -
Top of Formation:
UBA: 6867'
BLW: N/A

Volume Behind Pipe:
1.3 Yield Assumed
Theoretical Calculations (TTOC)

Event: WELL MAINT - RIG
Event End: 5/26/2007 00:00
Sec. Reason: COLLAR LEAK
End Status: FINISHED - SUCCESS
Well Classification: DEVELOPMENT

OCCIDENTAL OF ELK HILLS INC

328-35S

Ground Level: 820.0ft
Datum: ORIGINAL KB @ 829.00ft (default)
API No.: 0402927774

Wellbore: ST 1
PBMD: 7,441.0ft
Btm TMD: 7,512.0ft
Spud Date: 8/2/1950 00:00
BH Coord X: 6,151,789.94uss ft
BH Coord Y: 2,286,842.18uss ft

Casing Shoes (ft) | Schematic (6/1/2007) | Openings Top/Btm/Type/Status

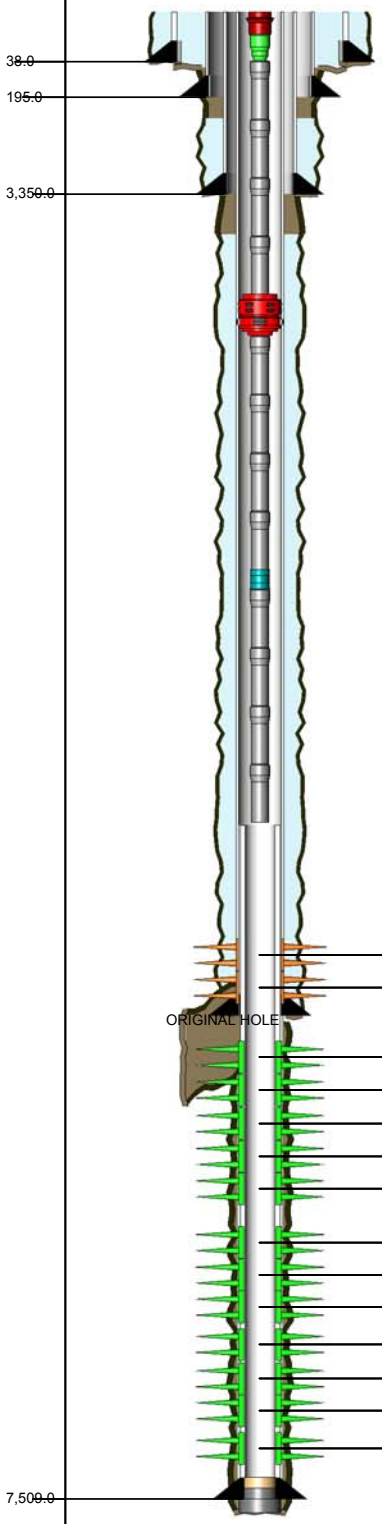

6,180.0ft, 6,181.0ft, PERFORATED, SQUEEZ
6,190.0ft, 6,191.0ft, PERFORATED, SQUEEZ
6,714.0ft, 6,760.0ft, PERFORATED, OPEN
6,770.0ft, 6,808.0ft, PERFORATED, OPEN
6,828.0ft, 6,842.0ft, PERFORATED, OPEN
6,852.0ft, 6,870.0ft, PERFORATED, OPEN
6,874.0ft, 6,884.0ft, PERFORATED, OPEN
7,133.0ft, 7,145.0ft, PERFORATED, OPEN
7,150.0ft, 7,200.0ft, PERFORATED, OPEN
7,200.0ft, 7,222.0ft, PERFORATED, OPEN
7,266.0ft, 7,272.0ft, PERFORATED, OPEN
7,290.0ft, 7,320.0ft, PERFORATED, OPEN
7,320.0ft, 7,330.0ft, PERFORATED, OPEN
7,363.0ft, 7,390.0ft, PERFORATED, OPEN

ROD STRING Report Date: 5/26/2007 00:00

Component	Top MD (ft)	Btm MD (ft)
POLROD	0.0	36.0
PNYROD	36.0	54.0
ROD	54.0	1,854.0
R-4PER	1,854.0	2,454.0
ROD	2,454.0	5,964.0
RSTBAR	5,964.0	5,968.0
INSPMP	5,968.0	5,992.0

TUBING STRING Report Date: 5/26/2007 00:00

Component	Top MD (ft)	Btm MD (ft)
TH-DBB	9.0	9.8
FATNIP	9.8	10.4
TBGJNT	10.4	5,854.8
AC	5,854.8	5,857.2
TBGJNT	5,857.2	5,982.7
STNIP	5,982.7	5,983.8
TBGJNT	5,983.8	6,015.3

PLUG BACK Report Date: 8/28/2002 00:00

Component	Top MD (ft)	Btm MD (ft)
FILL	7,439.0	7,441.0

PLUG BACK Report Date: 8/5/1996 00:00

Component	Top MD (ft)	Btm MD (ft)
CEMENT	7,441.0	7,509.0

PLUG BACK Report Date: 7/19/1996 00:00

Component	Top MD (ft)	Btm MD (ft)
CEMENT	7,509.0	7,512.0

CONDUCTOR CASING Report Date: 8/2/1950 00:00

Item	OD (in)	Grade	Wt. (ppf)	TopMD (ft)	BtmMD (ft)
CASING JOINT(S)	26.000			9.0	38.0

SURFACE CASING Report Date: 9/16/1950 00:00

Item	OD (in)	Grade	Wt. (ppf)	TopMD (ft)	BtmMD (ft)
CASING JOINT(S)	16.000		65.00	9.0	195.0

INTERMEDIATE CASING Report Date: 9/20/1950 00:00

Item	OD (in)	Grade	Wt. (ppf)	TopMD (ft)	BtmMD (ft)
CASING JOINT(S)	10.750	J-55	45.50	9.0	77.2
CASING JOINT(S)	10.750	J-55	40.50	77.2	2,609.5
CASING JOINT(S)	10.750	J-55	45.50	2,609.5	3,350.0

PRODUCTION CASING Report Date: 10/13/1950 00:00

Item	OD (in)	Grade	Wt. (ppf)	TopMD (ft)	BtmMD (ft)
CASING JOINT(S)	7.000	N-80	26.00	9.0	28.3
CASING JOINT(S)	7.000	N-80	23.00	28.3	5,713.6
CASING JOINT(S)	7.000	N-80	26.00	5,713.6	7,015.0

LINER Report Date: 7/19/1996 00:00

Item	OD (in)	Grade	Wt. (ppf)	TopMD (ft)	BtmMD (ft)
TIE BACK	5.875	P-110	18.00	6,053.2	6,066.4
LINER HANGER	6.276	P-110	18.00	6,066.4	6,073.8
CASING JOINT(S)	5.000	P-110	18.00	6,073.8	7,439.3
FLOAT COLLAR	5.000	P-110	18.00	7,439.3	7,441.3
CASING JOINT(S)	5.000	P-110	18.00	7,441.3	7,507.6
FLOAT SHOE	5.000	P-110	18.00	7,507.6	7,509.0

Well: 328-35S-RD1 S/T/R: 35S/30S/24E

CASING CEMENT DETAIL
- - -
Sfc Csg. Cmt Vol.: 450 sks
Hole Size: 22"
Top Job: no
Rtns to Sfc: yes
TOC: sfc
- - -

Interm Csg. Cmt Vol.: 650 sks
Hole Size: 15"
Top Job: no
Rtns to Sfc: no
TTOC: 1544' per thermometric survey
- - -

Prod. Csg. Cmt Vol.: 500 sks
Hole Size: 9.75"
Top Job: no
Rtns to Sfc: no
TTOC: 4360' per thermometric survey
- - -

Liner Cmt Vol.: 260 cf
Hole Size: 6.125"
Top Job: no
Rtns to Sfc: no
TTOC: 3700'
- - -
Top of Formation:
UBA: 6865'
BLW: 7389'

Volume Behind Pipe:
1.3 Yield Assumed
Theoretical Calculations (TTOC)

Event: WELL MAINT - RIGLESS
Event End:
Sec. Reason:
End Status:
Well Classification: DEVELOPMENT

OCCIDENTAL OF ELK HILLS INC

328X-34S

Ground Level: 965.0ft
Datum: ORIGINAL KB @ 987.00ft (default)
API No.: 0403029197

Wellbore: ST1
PBMD: 6,165.0ft
Btm TMD: 6,392.0ft
Spud Date: 3/1/2006 21:00
BH Coord X: 6,146,325.78uss ft
BH Coord Y: 2,287,363.20uss ft

Casing Shoes (ft)	Schematic (5/1/2008)	Openings Top/Btm/Type/Status

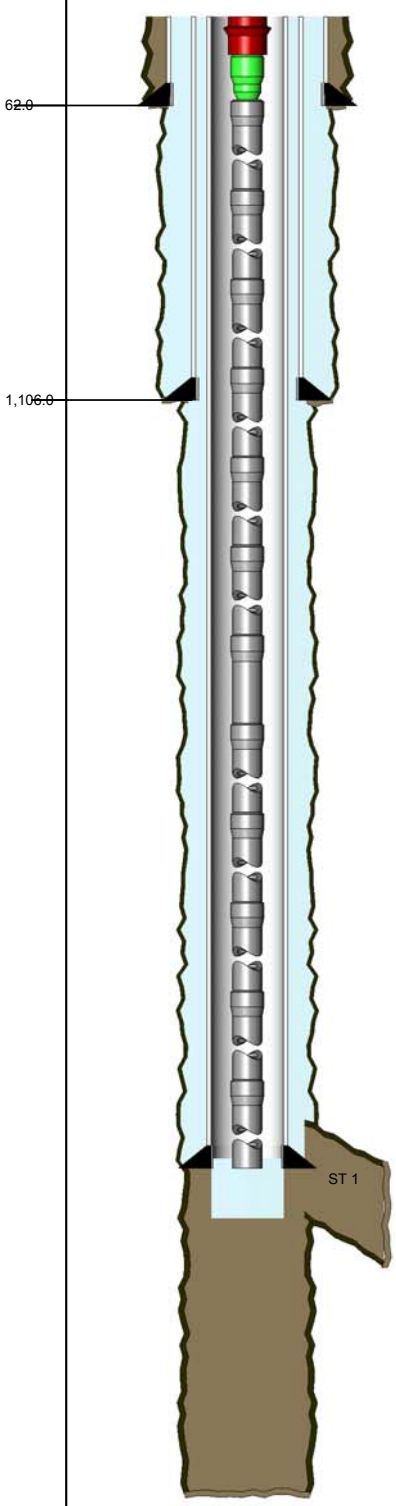

TUBING STRING Report Date: 4/11/2008 00:00

Component	Top MD (ft)	Btm MD (ft)
TH-DBB	22.0	22.7
FATNIP	22.7	23.3
CAS	23.3	6,733.8
WBEQP	6,733.8	6,734.2

CONDUCTOR CASING Report Date: 2/27/2006 00:00

Item	OD (in)	Grade	Wt. (ppf)	TopMD (ft)	BtmMD (ft)
CASING JOINT(S)	14.000			22.0	62.0

SURFACE CASING Report Date: 3/2/2006 00:00

Item	OD (in)	Grade	Wt. (ppf)	TopMD (ft)	BtmMD (ft)
CASING JOINT(S)	9.625	K-55	36.00	22.0	1,069.2
	9.625			1,069.2	1,069.2
CASING JOINT(S)	9.625	K-55	36.00	1,069.2	1,104.9
CASING GUIDE SHOE	9.625			1,104.9	1,106.0

PRODUCTION CASING Report Date: 3/23/2006 00:00

Item	OD (in)	Grade	Wt. (ppf)	TopMD (ft)	BtmMD (ft)
CASING JOINT(S)	7.000	N-80	26.00	22.0	6,718.2
FLAG JOINT	7.000	N-80	26.00	6,718.2	6,730.2
CASING JOINT(S)	7.000	N-80	26.00	6,730.2	7,471.4
FLOAT COLLAR	7.000			7,471.4	7,473.0
CASING JOINT(S)	7.000	N-80	26.00	7,473.0	7,563.3
FLOAT SHOE	7.000			7,563.3	7,565.0

PLUG BACK INFORMATION:

Drilled to 6392'.
Fish at bottom of 9.875" hole.
Pumped 150 CF "G" cmt.
Cleaned out to 6165'
and kicked off ST1.

Well: 328X-34S S/T/R: 34S/30S/24E

CASING CEMENT DETAIL
- - -
Sfc Csg. Cmt Vol.: 1060 cf
Hole Size: 13.5"
Top Job: no
Rtns to Sfc: 45 bbls
TOC: sfc
- - -

Interm Csg. Cmt Vol.:
Hole Size:
Top Job:
Rtns to Sfc:
TTOC:
- - -

Prod. Csg. Cmt Vol.:
Hole Size:
Top Job:
Rtns to Sfc:
TTOC:
- - -

Liner Cmt Vol.:
Hole Size:
Top Job:
Rtns to Sfc :
TTOC:
- - -
Top of Formation:
UBA: 6867'
BLW: 7405'

Volume Behind Pipe:
1.3 Yield Assumed
Theoretical Calculations (TTOC)

Event: WELL MAINT - RIGLESS
Event End:
Sec. Reason:
End Status:
Well Classification: DEVELOPMENT

OCCIDENTAL OF ELK HILLS INC

328X-34S

Ground Level: 965.0ft
Datum: ORIGINAL KB @ 987.00ft (default)
API No.: 0403029197

Wellbore: ST 1
PBMD: 7,472.0ft
Btm TMD: 7,600.0ft
Spud Date: 3/1/2006 21:00
BH Coord X: 6,146,160.96uss ft
BH Coord Y: 2,287,322.86uss ft

Casing Shoes (ft) | Schematic (5/1/2008) | Openings Top/Btm/Type/Status

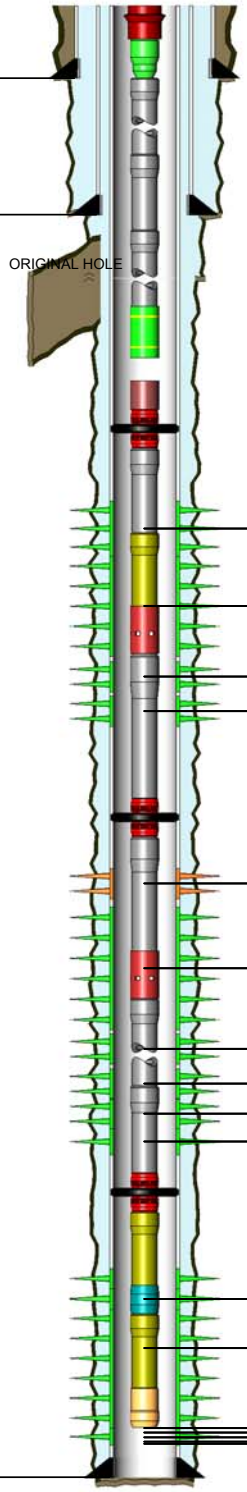

6,972.0ft, 6,987.0ft, PERFORATED, OPEN
6,987.0ft, 7,002.0ft, PERFORATED, OPEN
7,010.0ft, 7,020.0ft, PERFORATED, OPEN
7,026.0ft, 7,114.0ft, PERFORATED, OPEN
7,140.0ft, 7,141.0ft, PERFORATED, SQUE
7,144.0ft, 7,210.0ft, PERFORATED, OPEN
7,216.0ft, 7,226.0ft, PERFORATED, OPEN
7,232.0ft, 7,256.0ft, PERFORATED, OPEN
7,256.0ft, 7,264.0ft, PERFORATED, OPEN
7,264.0ft, 7,278.0ft, PERFORATED, OPEN
7,300.0ft, 7,301.0ft, PERFORATED, OPEN
7,298.0ft, 7,314.0ft, PERFORATED, OPEN
7,314.0ft, 7,318.0ft, PERFORATED, OPEN
7,337.0ft, 7,341.0ft, PERFORATED, OPEN
7,344.0ft, 7,382.0ft, PERFORATED, OPEN
7,382.0ft, 7,388.0ft, PERFORATED, OPEN
7,388.0ft, 7,402.0ft, PERFORATED, OPEN

TUBING STRING — Report Date: 4/11/2008 00:00

Component	Top MD (ft)	Btm MD (ft)
TH-DBB	22.0	22.7
FATNIP	22.7	23.3
CAS	23.3	6,733.8
WBEQP	6,733.8	6,734.2

TUBING STRING — Report Date: 3/6/2007 00:00

Component	Top MD (ft)	Btm MD (ft)
ON-OFF	6,944.5	6,946.8
PKR-SH	6,946.8	6,952.3
CAS	6,952.3	6,983.7
PUPJNT	6,983.7	6,993.9
SS-O	6,993.9	6,998.0
CAS	6,998.0	7,122.6
PKR-SH	7,122.6	7,128.2
CAS	7,128.2	7,159.4
SS-C	7,159.4	7,163.5
CAS	7,163.5	7,287.9
PKR-SH	7,287.9	7,291.7
PUPJNT	7,291.7	7,299.8
PNIP-O	7,299.8	7,301.2
PUPJNT	7,301.2	7,309.4
WLREG	7,309.4	7,309.9

CONDUCTOR CASING — Report Date: 2/27/2006 00:00

Item	OD (in)	Grade	Wt. (ppf)	TopMD (ft)	BtmMD (ft)
CASING JOINT(S)	14.000			22.0	62.0

SURFACE CASING — Report Date: 3/2/2006 00:00

Item	OD (in)	Grade	Wt. (ppf)	TopMD (ft)	BtmMD (ft)
CASING JOINT(S)	9.625	K-55	36.00	22.0	1,069.2
	9.625			1,069.2	1,069.2
CASING JOINT(S)	9.625	K-55	36.00	1,069.2	1,104.9
CASING GUIDE SHOE	9.625			1,104.9	1,106.0

PRODUCTION CASING — Report Date: 3/23/2006 00:00

Item	OD (in)	Grade	Wt. (ppf)	TopMD (ft)	BtmMD (ft)
CASING JOINT(S)	7.000	N-80	26.00	22.0	6,718.2
FLAG JOINT	7.000	N-80	26.00	6,718.2	6,730.2
CASING JOINT(S)	7.000	N-80	26.00	6,730.2	7,471.4
FLOAT COLLAR	7.000			7,471.4	7,473.0
CASING JOINT(S)	7.000	N-80	26.00	7,473.0	7,563.3
FLOAT SHOE	7.000			7,563.3	7,565.0

Well: 328X-34S-RD1 S/T/R: 34S/30S/24E

CASING CEMENT DETAIL
- - -
Sfc Csg. Cmt Vol.: 809 cf
Hole Size: 13.5" (9-5/8" Casing)
Top Job: NO
Rtns to Sfc: 45 bbls
TOC: Surface
- - -

Interm Csg. Cmt Vol.: NONE
Hole Size:
Top Job:
Rtns to Sfc:
TTOC:
- - -

Prod. Csg. Cmt Vol.: 2536 cf
Hole Size: 8.75" (7" Casing)
Top Job: No
Rtns to Sfc: NO
TTOC: Surface
- - -

Liner Cmt Vol.: None
Hole Size:
Top Job:
Rtns to Sfc :
TTOC:
- - -
Top of Formation:
UBA: 6867'
BLW: 7405'

Volume Behind Pipe:
1.3 Yield Assumed
Theoretical Calculations (TTOC)

OCCIDENTAL OF ELK HILLS INC

331-2G

Event: WELL MAINT - RIG
Event End: 7/31/2009 00:00
Sec. Reason: LOW PRODUCTION
End Status: FINISHED - SUCCESS
Well Classification: DEVELOPMENT

Ground Level: 849.0ft
Datum: ORIGINAL KB @ 864.00ft (default)
API No.: 0402956812

Wellbore: ST1
PBMD: 6,870.0ft
Btm TMD: 7,700.0ft
Spud Date: 6/9/1977 00:00
BH Coord X: 6,152,241.68uss ft
BH Coord Y: 2,286,343.21uss ft

Casing Shoes (ft)	Schematic (8/1/2009)	Openings Top/Btm/Type/Status

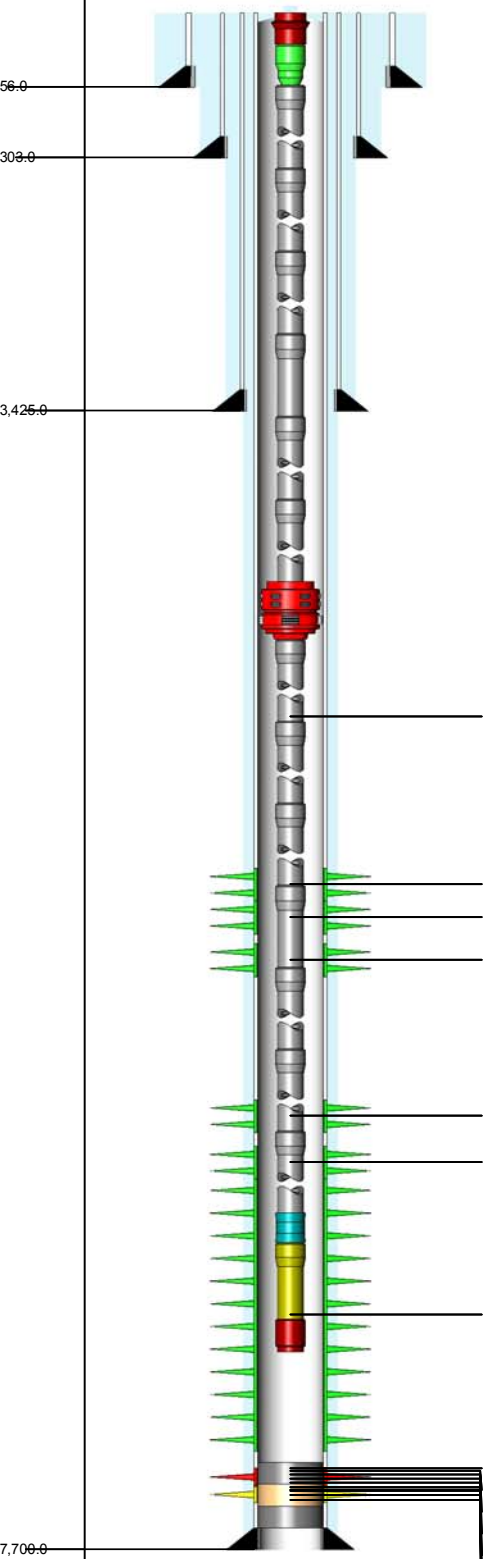

6,250.0ft, 6,251.0ft, WSO PERFS, OPEN
6,493.0ft, 6,503.0ft, PERFORATED, OPEN
6,503.0ft, 6,517.0ft, PERFORATED, OPEN
6,533.0ft, 6,541.0ft, PERFORATED, OPEN
6,739.0ft, 6,780.0ft, PERFORATED, OPEN
6,790.0ft, 6,802.0ft, PERFORATED, OPEN
6,802.0ft, 6,865.0ft, PERFORATED, OPEN
6,974.0ft, 7,008.0ft, PERFORATED, ABANDONE
7,018.0ft, 7,048.0ft, PERFORATED, ABANDONE
7,058.0ft, 7,144.0ft, PERFORATED, ABANDONE
7,154.0ft, 7,198.0ft, PERFORATED, ABANDONE
7,208.0ft, 7,295.0ft, PERFORATED, ABANDONE
7,305.0ft, 7,356.0ft, PERFORATED, ISOLATED
7,372.0ft, 7,377.0ft, PERFORATED, ISOLATED
7,388.0ft, 7,404.0ft, PERFORATED, ISOLATED
7,422.0ft, 7,516.0ft, PERFORATED, ISOLATED
7,526.0ft, 7,595.0ft, PERFORATED, ISOLATED

ROD STRING Report Date: 7/31/2009 00:00

Component	Top MD (ft)	Btm MD (ft)
POLRDL	0.0	36.0
PNYROD	36.0	60.0
ROD	60.0	1,290.0
ROD	1,290.0	2,910.0
ROD	2,910.0	3,030.0
ROD	3,030.0	6,750.0
RSTBAR	6,750.0	6,753.0
INSPMP	6,753.0	6,783.0

TUBING STRING Report Date: 1/15/2009 00:00

Component	Top MD (ft)	Btm MD (ft)
TH-DBB	15.0	15.7
FATNIP	15.7	16.4
CAS	16.4	6,105.6
AC	6,105.6	6,107.9
CAS	6,107.9	6,814.8
STNIP	6,814.8	6,815.9
PUPJNT	6,815.9	6,820.1
STCOLL	6,820.1	6,820.5

PLUG BACK Report Date: 6/6/2000 00:00

Component	Top MD (ft)	Btm MD (ft)
CEMENT	6,870.0	7,265.0
FILL	7,265.0	7,655.0

PLUG BACK Report Date: 1/27/1978 00:00

Component	Top MD (ft)	Btm MD (ft)
CEMENT	7,655.0	7,697.0

CONDUCTOR CASING Report Date: 6/9/1977 00:00

Item	OD (in)	Grade	Wt. (ppf)	TopMD (ft)	BtmMD (ft)
CASING JOINT(S)	20.000			15.0	56.0

SURFACE CASING Report Date: 1/5/1978 00:00

Item	OD (in)	Grade	Wt. (ppf)	TopMD (ft)	BtmMD (ft)
CASING JOINT(S)	13.375	H-40	48.00	15.0	301.8
GUIDE SHOE	13.375			301.8	303.0

INTERMEDIATE CASING Report Date: 1/9/1978 00:00

Item	OD (in)	Grade	Wt. (ppf)	TopMD (ft)	BtmMD (ft)
CASING JOINT(S)	9.625	N-80	40.00	15.0	3,423.8
GUIDE SHOE	9.625			3,423.8	3,425.0

PRODUCTION CASING Report Date: 1/26/1978 00:00

Item	OD (in)	Grade	Wt. (ppf)	TopMD (ft)	BtmMD (ft)
CASING JOINT(S)	7.000	K-55	26.00	15.0	74.8
CASING JOINT(S)	7.000	K-55	23.00	74.8	5,139.4
CASING JOINT(S)	7.000	K-55	26.00	5,139.4	6,361.2
FLAG JOINT	7.000	K-55	26.00	6,361.2	6,370.1
CASING JOINT(S)	7.000	K-55	26.00	6,370.1	7,654.8
FLOAT COLLAR	7.000			7,654.8	7,656.1
CASING JOINT(S)	7.000	K-55	26.00	7,656.1	7,697.8
FLOAT SHOE	7.000			7,697.8	7,700.0

Well: 331-2G S/T/R: 2G/31S/24E

CASING CEMENT DETAIL
- - -
Sfc Csg. Cmt Vol.: 368 cf
Hole Size: 17.5"
Top Job: No
Rtns to Sfc: 50 cf
TOC: sfc
- - -

Interm Csg. Cmt Vol.: 1730 cf
Hole Size: 12.25'
Top Job: No
Rtns to Sfc: 115 cf
TOC: sfc
- - -

Prod. Csg. Cmt Vol.: 1850 cf
Hole Size: 8.75"
Top Job: no
Rtns to Sfc: no
TTOC: 3552' by CBL
- - -

Liner Cmt Vol.:
Hole Size:
Top Job:
Rtns to Sfc :
TTOC:
- - -
Top of Formation:
UBA: 7027'
BLW: 7598'

Volume Behind Pipe:
1.3 Yield Assumed
Theoretical Calculations (TTOC)

OCCIDENTAL OF ELK HILLS INC

331-3G

Event: WELL MAINT - RIG
Event End: 3/25/2009 00:00
Sec. Reason: SCALED

Ground Level: 992.0ft
Datum: ORIGINAL KB @ 1,008.00ft (default)
API No.: 0402953296

Wellbore: ORIGINAL HOLE
PBMD: 7,468.0ft
Btm TMD: 7,800.0ft
Spud Date: 6/4/1976 00:00
BH Coord X: 6,147,020.08uss ft
BH Coord Y: 2,286,136.55uss ft

Casing Shoes (ft) | Schematic (4/1/2009) | Openings Top/Btm/Type/Status

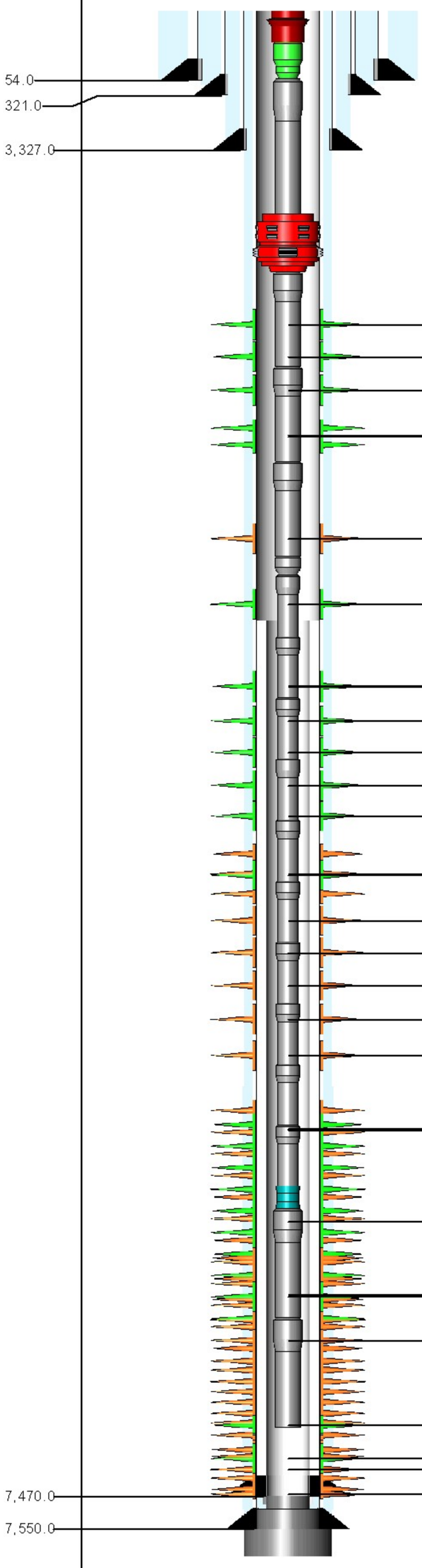

6,400.0ft, 6,416.0ft, PERFORATED, OPEN
6,420.0ft, 6,440.0ft, PERFORATED, OPEN
6,446.0ft, 6,452.0ft, PERFORATED, OPEN
6,476.0ft, 6,477.0ft, PERFORATED, OPEN
6,476.0ft, 6,482.0ft, PERFORATED, OPEN
6,596.0ft, 6,600.0ft, PERFORATED, SQUEEZ
6,696.0ft, 6,706.0ft, PERFORATED, OPEN
6,716.0ft, 6,717.0ft, PERFORATED, OPEN
6,716.0ft, 6,726.0ft, PERFORATED, OPEN
6,752.0ft, 6,762.0ft, PERFORATED, OPEN
6,772.0ft, 6,782.0ft, PERFORATED, OPEN
6,802.0ft, 6,810.0ft, PERFORATED, OPEN
6,814.0ft, 6,820.0ft, PERFORATED, OPEN
6,902.0ft, 6,954.0ft, PERFORATED, SQUEEZ
6,930.0ft, 6,931.0ft, PERFORATED, OPEN
6,964.0ft, 6,995.0ft, PERFORATED, SQUEEZ
7,005.0ft, 7,042.0ft, PERFORATED, SQUEEZ
7,056.0ft, 7,098.0ft, PERFORATED, SQUEEZ
7,113.0ft, 7,208.0ft, PERFORATED, SQUEEZ
7,223.0ft, 7,282.0ft, PERFORATED, SQUEEZ
7,340.0ft, 7,342.0ft, PERFORATED, OPEN
7,324.0ft, 7,358.0ft, PERFORATED, SQUEEZ
7,340.0ft, 7,385.0ft, PERFORATED, OPEN
7,324.1ft, 7,456.1ft, PERFORATED, SQUEEZ
7,380.0ft, 7,382.0ft, PERFORATED, OPEN
7,372.0ft, 7,406.0ft, PERFORATED, SQUEEZ
7,392.0ft, 7,410.0ft, PERFORATED, OPEN
7,426.0ft, 7,428.0ft, PERFORATED, OPEN
7,419.0ft, 7,476.0ft, PERFORATED, SQUEEZ
7,456.1ft, 7,476.1ft, PERFORATED, SQUEEZ

ROD STRING Report Date: 3/18/2009 00:00

Component	Top MD (ft)	Btm MD (ft)
POLROD	0.0	36.0
PNYROD	36.0	54.0
ROD	54.0	2,724.0
ROD	2,724.0	6,414.0
R-6PER	6,414.0	7,374.0
RSTBAR	7,374.0	7,378.0
INSPMP	7,378.0	7,378.0

TUBING STRING Report Date: 3/20/2009 00:00

Component	Top MD (ft)	Btm MD (ft)
TH-DBB	16.0	16.8
FATNIP	16.8	17.4
TBGJNT	17.4	6,319.7
AC	6,319.7	6,322.0
TBGJNT	6,322.0	6,600.5
XO	6,600.5	6,601.6
TBGJNT	6,601.6	7,361.6
STNIP	7,361.6	7,362.7
TBGJNT	7,362.7	7,394.5

PLUG BACK Report Date: 1/25/1998 00:00

Component	Top MD (ft)	Btm MD (ft)
CEMENT	7,468.0	7,499.0

PLUG BACK Report Date: 1/25/1998 00:00

Component	Top MD (ft)	Btm MD (ft)
CEMENT	7,499.0	7,550.0

PLUG BACK Report Date: 8/13/1976 00:00

Component	Top MD (ft)	Btm MD (ft)
CEMENT	7,550.0	7,800.0

CONDUCTOR CASING Report Date: 6/4/1976 00:00

Item	OD (in)	Grade	Wt. (ppf)	TopMD (ft)	BtmMD (ft)
CASING JOINT(S)	20.000			16.0	54.0

SURFACE CASING Report Date: 7/23/1976 00:00

Item	OD (in)	Grade	Wt. (ppf)	TopMD (ft)	BtmMD (ft)
CASING JOINT(S)	13.375	K-55	54.50	16.0	321.0

INTERMEDIATE CASING Report Date: 7/27/1976 00:00

Item	OD (in)	Grade	Wt. (ppf)	TopMD (ft)	BtmMD (ft)
CASING JOINT(S)	9.625	K-55	40.00	16.0	3,327.0

PRODUCTION CASING Report Date: 8/12/1976 00:00

Item	OD (in)	Grade	Wt. (ppf)	TopMD (ft)	BtmMD (ft)
CASING JOINT(S)	7.000	N-80	26.00	16.0	84.0
CASING JOINT(S)	7.000	K-55	23.00	84.0	4,732.0
CASING JOINT(S)	7.000	N-80	26.00	4,732.0	7,550.0

INNER LINER Report Date: 1/25/1998 00:00

Item	OD (in)	Grade	Wt. (ppf)	TopMD (ft)	BtmMD (ft)
LINER HANGER	7.000	P-110	18.00	6,707.0	6,714.8
CASING JOINT(S)	5.000	P-110	18.00	6,714.8	7,387.0
	5.000	P-110	18.00	7,387.0	7,387.7
FLOAT COLLAR	5.000	P-110	18.00	7,387.7	7,388.4
CASING JOINT(S)	5.000	P-110	18.00	7,388.4	7,468.0
GUIDE SHOE	5.000	P-110	18.00	7,468.0	7,470.0

Well: 331-3G S/T/R: 3G/30S/24E

CASING CEMENT DETAIL
- - -
Sfc Csg. Cmt Vol.: 378 cf
Hole Size: 17.5
Top Job: no
Rtns to Sfc: 20 cf
TOC: sfc
- - -

Interm Csg. Cmt Vol.: 1611 cf
Hole Size: 12.25
Top Job: no
Rtns to Sfc: 250 cf
TOC: sfc
- - -

Prod. Csg. Cmt Vol.: 1700 cf
Hole Size: 8.75
Top Job: no
Rtns to Sfc: 0
TTOC: sfc

Liner Cmt Vol.:
Hole Size:
Top Job:
Rtns to Sfc:
TOC:
- - -
Top of Formation:
UBA: 6939'
BLW: 7485'

Volume Behind Pipe:
1.3 Yield Assumed
Theoretical Calculations (TTOC)

OCCIDENTAL OF ELK HILLS INC

3-32X-1G

Event: WELL ENHANCEMENT
Event End: 1/20/2005 00:00
Sec. Reason:

Ground Elev: 744.5ft
KB to Ground: 21.0ft
Datum: ORIGINAL KB @ 765.50ft (default)
API No.: 0403017031

Wellbore: ORIGINAL HOLE
Top TMD: 21.0ft
PBMD: 9,274.0ft
Btm TMD: 10,761.0ft
Spud Date: 11/12/2000 00:00
BH Coord X: 6,157,039.36uss ft BH Coord Y: 2,286,071.98uss

Casing Shoes (ft) | Schematic (1/20/2005) | Openings Top/Btm/Type/Status

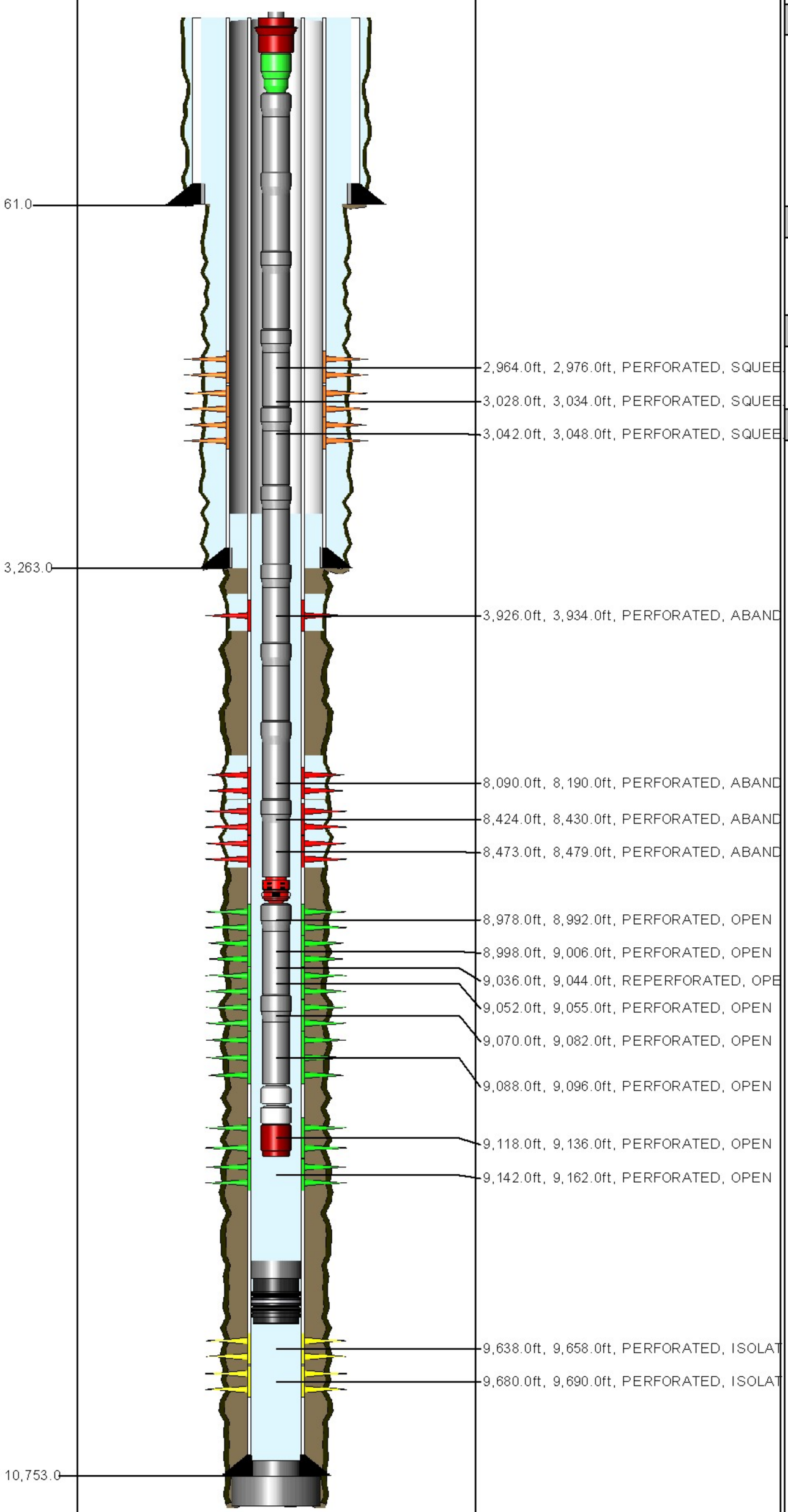

ROD STRING Report Date: 1/20/2005 00:00

Component	Top MD (ft)	Btm MD (ft)
POLROD	17.0	
PNYROD	53.0	65.0
ROD	65.0	2,435.0
ROD	2,435.0	4,085.0
R-4PER	4,085.0	5,435.0
ROD	5,435.0	9,095.0
INSPMP	9,095.0	

TUBING STRING Report Date: 1/19/2005 00:00

Component	Top MD (ft)	Btm MD (ft)
TH-DBB	21.0	21.7
FATNIP	21.7	22.4
TBGJNT	22.4	8,938.0
AC	8,938.0	8,940.6
TBGJNT	8,940.6	9,096.2
PMPSH	9,096.2	9,096.8
PMPJKT	9,096.8	9,127.8
STCOLL	9,127.8	9,128.2

PLUG BACK Report Date: 1/20/2001 00:00

Component	Top MD (ft)	Btm MD (ft)
CEMENT	9,490.0	9,500.0
BP-DR	9,500.0	9,501.5

PLUG BACK Report Date: 1/8/2001 00:00

Component	Top MD (ft)	Btm MD (ft)
CEMENT	10,664.3	10,756.0

PLUG BACK Report Date: 12/22/2000 00:00

Component	Top MD (ft)	Btm MD (ft)
CEMENT	10,756.0	10,761.0

CONDUCTOR CASING Report Date: 11/12/2000 00:00

Item Description	Btm MD(ft)
CASING JOINT(S) 16 in,	61.0

SURFACE CASING Report Date: 11/19/2000 00:00

Item Description	Btm MD (ft)
CASING JOINT(S) 9.625 in, , L-80, 40	3,163.6
FLOAT COLLAR 9.625 in, , L-80, 40	3,165.9
CASING JOINT(S) 9.625 in, , L-80, 40	3,261.2
FLOAT SHOE 9.625 in, , L-80, 40	3,263.0

PRODUCTION CASING Report Date: 12/22/2000 00:00

Item Description	Btm MD (ft)
CASING JOINT(S) 5.5 in, , N-80, 17	10,753.0

Well: 3-32X-1G S/T/R: 1G/31S/24E

CASING CEMENT DETAIL
- - -
Sfc Csg. Cmt Vol.: 1659cf
Hole Size: 12.25"
Top Job:
Rtns to Sfc: Yes
TOC: Sfc
- - -

Interm Csg. Cmt Vol.:
Hole Size:
Top Job:
Rtns to Sfc:
TOC:
- - -

Prod. Csg. Cmt Vol.: 2299cf
Hole Size: 8.5"
Top Job: no
Rtns to Sfc: No
TTOC: 717'
- - -

Liner Cmt Vol.:
Hole Size:
Top Job:
Rtns to Sfc:
TOC:
- - -

Top of Formation:
UBA: 7990'
BLW: 8915'

Volume Behind Pipe
1.15 Yield Assumed on
Theoretical Calculations (T) J Ballow

OCCIDENTAL OF ELK HILLS INC

333-2G

Event: WELL CONVERSION
Event End:
Sec. Reason:
End Status:
Well Classification: INJECTION

Ground Level: 865.0ft
Datum: ORIGINAL KB @ 880.00ft (default)
API No.: 0402955607

Wellbore: ST1
PBMD: 7,783.0ft
Btm TMD: 8,070.0ft
Spud Date: 4/4/1977 00:00
BH Coord X: 6,152,217.21uss ft
BH Coord Y: 2,285,292.89uss ft

Casing Shoes (ft) | Schematic (4/1/2007) | Openings Top/Btm/Type/Status

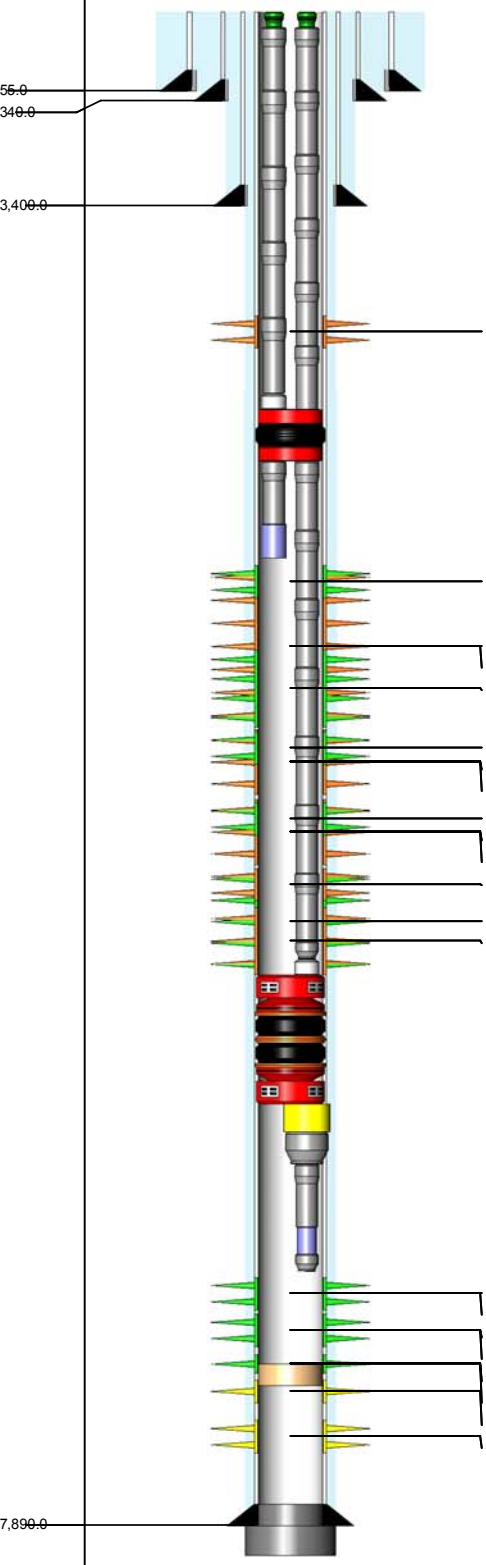

6,590.0ft, 6,590.5ft, PERFORATED, SQUEEZED
7,315.0ft, 7,340.0ft, PERFORATED, OPEN
7,315.0ft, 7,365.0ft, REPERFORATED, SQUEEZE
7,315.0ft, 7,365.0ft, PERFORATED, SQUEEZED
7,350.0ft, 7,365.2ft, PERFORATED, OPEN
7,380.0ft, 7,440.0ft, PERFORATED, OPEN
7,375.0ft, 7,445.0ft, PERFORATED, SQUEEZED
7,375.0ft, 7,445.0ft, REPERFORATED, SQUEEZE
7,462.0ft, 7,477.0ft, PERFORATED, OPEN
7,460.0ft, 7,480.0ft, PERFORATED, SQUEEZED
7,460.0ft, 7,480.0ft, REPERFORATED, SQUEEZE
7,490.0ft, 7,535.0ft, PERFORATED, SQUEEZED
7,490.0ft, 7,600.0ft, PERFORATED, OPEN
7,545.0ft, 7,600.0ft, PERFORATED, SQUEEZED
7,650.0ft, 7,700.0ft, PERFORATED, OPEN
7,650.0ft, 7,700.0ft, REPERFORATED, OPEN
7,710.0ft, 7,730.0ft, PERFORATED, OPEN
7,710.0ft, 7,730.0ft, REPERFORATED, OPEN
7,740.0ft, 7,765.0ft, PERFORATED, OPEN
7,740.0ft, 7,765.0ft, REPERFORATED, OPEN
7,775.0ft, 7,795.0ft, PERFORATED, ISOLATED
7,807.0ft, 7,831.0ft, PERFORATED, ISOLATED

TUBING STRING — Report Date: 11/26/1985 00:00

Component	Top MD (ft)	Btm MD (ft)
TH-D	15.0	15.5
TBGJNT	15.5	19.2
TBGJNT	19.2	7,254.8
LOCSUB	7,254.8	7,255.3
PKR-D	7,255.3	7,264.6
TBGJNT	7,264.6	7,272.9
NOGO-O	7,272.9	7,273.8

TUBING STRING — Report Date: 11/25/1985 00:00

Component	Top MD (ft)	Btm MD (ft)
TH-D	15.0	15.5
TBGJNT	15.5	35.4
TBGJNT	35.4	7,255.3
PKR-D	7,255.3	7,264.6
TBGJNT	7,264.6	7,598.6
XO	7,598.6	7,599.0
LOCSUB	7,599.0	7,600.0

PACKER ASSEMBLY (RETRIEVABLE) — Report Date: 11/25/1985 00:00

Component	Top MD (ft)	Btm MD (ft)
PKR-S	7,600.0	7,603.9
MOEXT	7,603.9	7,609.5
XO	7,609.5	7,610.2
TBGJNT	7,610.2	7,618.5
NOGO-O	7,618.5	7,619.5
XO	7,619.5	7,620.1

PLUG BACK — Report Date: 12/30/2003 00:00

Component	Top MD (ft)	Btm MD (ft)
FILL	7,751.0	7,783.0

PLUG BACK — Report Date: 6/3/1977 00:00

Component	Top MD (ft)	Btm MD (ft)
CEMENT	7,842.0	7,890.0

PLUG BACK — Report Date: 6/1/1977 00:00

Component	Top MD (ft)	Btm MD (ft)
CEMENT	7,890.0	8,070.0

CONDUCTOR CASING — Report Date: 4/4/1977 00:00

em	OD (in)	Grade	Wt. (ppf)	TopMD (ft)	BtmMD (ft)
ASING JOINT(S)	20.000			15.0	55.0

SURFACE CASING — Report Date: 5/11/1977 00:00

em	OD (in)	Grade	Wt. (ppf)	TopMD (ft)	BtmMD (ft)
ASING JOINT(S)	13.375	K-55	48.00	15.0	340.0

INTERMEDIATE CASING — Report Date: 5/16/1977 00:00

em	OD (in)	Grade	Wt. (ppf)	TopMD (ft)	BtmMD (ft)
ASING JOINT(S)	9.625	K-55	40.00	15.0	3,400.0

PRODUCTION CASING — Report Date: 6/1/1977 00:00

em	OD (in)	Grade	Wt. (ppf)	TopMD (ft)	BtmMD (ft)
ASING JOINT(S)	7.000	K-55	26.00	15.0	75.1
ASING JOINT(S)	7.000	K-55	23.00	75.1	4,917.9
ASING JOINT(S)	7.000	K-55	26.00	4,917.9	6,647.6
LAG JOINT	7.000	K-55	26.00	6,647.6	6,665.1
ASING JOINT(S)	7.000	K-55	26.00	6,665.1	7,848.3
LOAT COLLAR	7.000	K-55	26.00	7,848.3	7,850.1
ASING JOINT(S)	7.000	K-55	26.00	7,850.1	7,887.6
LOAT SHOE	7.000	K-55	26.00	7,887.6	7,890.0

Well: 333-2G S/T/R: 2G/31S/24E

CASING CEMENT DETAIL
- - -
Sfc Csg. Cmt Vol.: 403 cf
Hole Size: 17.5"
Top Job: 115 cf
Rtns to Sfc:
TOC: sfc
- - -

Interm Csg. Cmt Vol.: 1730 cf
Hole Size: 12.25"
Top Job: no
Rtns to Sfc: yes
TOC: sfc
- - -

Prod. Csg. Cmt Vol.: 2200 cf
Hole Size: 8.65"
Top Job: no
Rtns to Sfc: no
TTOC: CBL suggests above 5841'
- - -

Liner Cmt Vol.:
Hole Size:
Top Job:
Rtns to Sfc :
TTOC:
- - -
Top of Formation:
UBA: 7324'
BLW: 7940'

Volume Behind Pipe:
1.3 Yield Assumed
Theoretical Calculations (TTOC)

Event: WELL MAINT - RIG
Event End: 4/21/2009 00:00
Sec. Reason:
End Status: FINISHED - SUCCESS
Well Classification: DEVELOPMENT

OCCIDENTAL OF ELK HILLS INC

333-34S

Ground Level: 891.0ft
Datum: ORIGINAL KB @ 905.00ft (default)
API No.: 0402957390

Wellbore: ORIGINAL HOLE
PBMD: 7,585.0ft
Btm TMD: 9,500.0ft
Spud Date: 3/1/1978 00:00
BH Coord X: 6,147,117.47uss ft
BH Coord Y: 2,289,480.82uss ft

Casing Shoes (ft)	Schematic (5/1/2009)	Openings Top/Btm/Type/Status
54.0	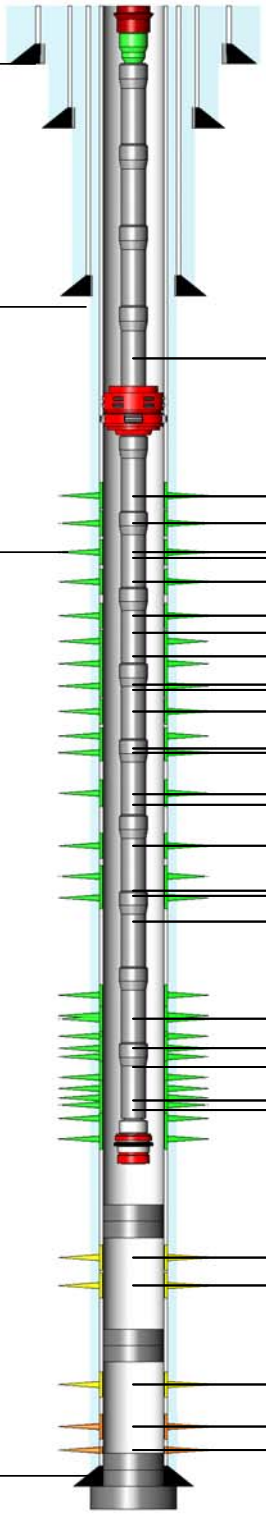	
3,501.1		
		6,500.0ft, 6,500.0ft, PERFORATED, SQUEEZ
		7,170.0ft, 7,184.0ft, PERFORATED, OPEN
		7,190.0ft, 7,190.1ft, PERFORATED, OPEN
391.2		7,202.0ft, 7,207.0ft, PERFORATED, OPEN
		7,165.0ft, 7,260.0ft, PERFORATED, OPEN
		7,220.0ft, 7,226.0ft, PERFORATED, OPEN
		7,248.0ft, 7,252.0ft, PERFORATED, OPEN
		7,255.0ft, 7,265.0ft, PERFORATED, OPEN
		7,281.0ft, 7,292.0ft, PERFORATED, OPEN
		7,298.0ft, 7,305.0ft, PERFORATED, OPEN
		7,285.0ft, 7,323.0ft, PERFORATED, OPEN
		7,308.0ft, 7,318.0ft, PERFORATED, OPEN
		7,326.0ft, 7,326.1ft, PERFORATED, OPEN
		7,324.0ft, 7,330.0ft, PERFORATED, OPEN
		7,335.0ft, 7,345.0ft, PERFORATED, OPEN
		7,333.0ft, 7,360.0ft, PERFORATED, OPEN
		7,364.0ft, 7,372.0ft, PERFORATED, OPEN
		7,380.0ft, 7,394.0ft, PERFORATED, OPEN
		7,390.0ft, 7,390.1ft, PERFORATED, OPEN
		7,380.0ft, 7,398.0ft, PERFORATED, OPEN
		7,422.0ft, 7,427.0ft, PERFORATED, OPEN
		7,430.0ft, 7,436.0ft, PERFORATED, OPEN
		7,404.0ft, 7,469.0ft, PERFORATED, OPEN
		7,450.0ft, 7,450.1ft, PERFORATED, OPEN
		7,446.0ft, 7,460.0ft, PERFORATED, OPEN
		7,640.0ft, 7,722.0ft, PERFORATED, ISOLATE
		7,734.0ft, 7,786.0ft, PERFORATED, ISOLATE
		7,975.0ft, 8,050.0ft, PERFORATED, ISOLATE
		8,190.0ft, 8,280.0ft, PERFORATED, SQUEEZ
		8,295.0ft, 8,308.0ft, PERFORATED, SQUEEZ
8,409.0		
		9,790.0ft, 9,796.0ft, PERFORATED, OPEN

ROD STRING Report Date: 4/10/2009 00:00

Component	Top MD (ft)	Btm MD (ft)
POLRDL	0.0	36.0
PNYROD	36.0	40.0
R-4PER	40.0	640.0
ROD	640.0	1,630.0
ROD	1,630.0	4,090.0
R-4PER	4,090.0	7,390.0
RSTBAR	7,390.0	7,394.0
INSPMP	7,394.0	7,418.0

TUBING STRING Report Date: 4/9/2009 00:00

Component	Top MD (ft)	Btm MD (ft)
TH-DBB	14.0	14.7
FATNIP	14.7	15.4
TBGJNT	15.4	7,021.7
AC	7,021.7	7,024.0
TBGJNT	7,024.0	7,452.7
PMPSH	7,452.7	7,453.3
GASANC	7,453.3	7,483.5

PLUG BACK Report Date: 1/23/1979 00:00

Component	Top MD (ft)	Btm MD (ft)
CEMENT	7,585.0	7,590.0

PLUG BACK Report Date: 1/23/1979 00:00

Component	Top MD (ft)	Btm MD (ft)
CEMENT	7,590.0	7,592.0

PLUG BACK Report Date: 1/17/1979 00:00

Component	Top MD (ft)	Btm MD (ft)
CEMENT	7,862.0	7,867.0
CEMENT	7,867.0	7,869.0

PLUG BACK Report Date: 11/29/1978 00:00

Component	Top MD (ft)	Btm MD (ft)
CEMENT	8,308.0	8,321.0

PLUG BACK Report Date: 5/10/1978 00:00

Component	Top MD (ft)	Btm MD (ft)
CEMENT	8,321.0	8,410.0

PLUG BACK Report Date: 5/8/1978 00:00

Component	Top MD (ft)	Btm MD (ft)
CEMENT	8,410.0	9,500.0

CONDUCTOR CASING Report Date: 3/10/1978 00:00

Item	OD (in)	Grade	Wt. (ppf)	TopMD (ft)	BtmMD (ft)
CASING JOINT(S)	20.000			14.0	54.0

SURFACE CASING Report Date: 3/20/1978 00:00

Item	OD (in)	Grade	Wt. (ppf)	TopMD (ft)	BtmMD (ft)
CASING JOINT(S)	13.375	K-55	54.50	14.0	308.8
CASING JOINT(S)	13.375	K-55	54.50	308.8	348.8
FLOAT SHOE	13.375	K-55	54.50	348.8	350.0

INTERMEDIATE CASING Report Date: 3/26/1978 00:00

Item	OD (in)	Grade	Wt. (ppf)	TopMD (ft)	BtmMD (ft)
CASING JOINT(S)	9.625	L-80	40.00	14.0	2,320.4
CASING JOINT(S)	9.625	C-75	40.00	2,320.4	3,458.8
FLOAT COLLAR	9.625	C-75	40.00	3,458.8	3,458.8
CASING JOINT(S)	9.625	C-75	40.00	3,458.8	3,498.8
FLOAT SHOE	9.625	C-75	40.00	3,498.8	3,500.0

PRODUCTION CASING Report Date: 5/8/1978 00:00

Item	OD (in)	Grade	Wt. (ppf)	TopMD (ft)	BtmMD (ft)
CASING JOINT(S)	7.000	N-80	29.00	14.0	96.1
CASING JOINT(S)	7.000	N-80	23.00	96.1	4,883.9
CASING JOINT(S)	7.000	N-80	26.00	4,883.9	6,614.0
FLAG JOINT	7.000	N-80	29.00	6,614.0	6,634.7
CASING JOINT(S)	7.000	N-80	29.00	6,634.7	8,317.2
FLOAT COLLAR	7.000	N-80	29.00	8,317.2	8,318.5
CASING JOINT(S)	7.000	N-80	29.00	8,318.5	8,407.8
FLOAT SHOE	7.000	N-80	29.00	8,407.8	8,410.0

Well: 333-34S S/T/R: 34S/30S/24E

CASING CEMENT DETAIL
- - -
Sfc Csg. Cmt Vol.: 490 cf
Hole Size: 17-1/2' (13-3/8' Casing)
Top Job: No
Rtns to Sfc: YES
TOC: NA
- - -

Interm Csg. Cmt Vol.: 1755 cf
Hole Size: 12-1/4" (9-5/8" Casing)
Top Job: NO
Rtns to Sfc: YES
TOC: NA
- - -

Prod. Csg. Cmt Vol.: 2100 cf
Hole Size: 8-3/4" (7" Casing)
Top Job: NO
Rtns to Sfc: NO
TTOC: Surface
- - -

Liner Cmt Vol.: NONE
Hole Size:
Top Job:
Rtns to Sfc:
TTOC:
- - -
Top of Formation:
UBA: 7164'
BLW: 7500'

Volume Behind Pipe:
1.3 Yield Assumed
Theoretical Calculations (TTOC)

OCCIDENTAL OF ELK HILLS INC

333-35S

Event: WELL MAINT - RIG
Event End: 1/25/2008 00:00
Sec. Reason: SANDED

Ground Level: 683.0ft
Datum: ORIGINAL KB @ 697.00ft (default)
API No.: 0402959060

Wellbore: ORIGINAL HOLE
PBMD: 7,475.0ft
Btm TMD: 8,250.0ft
Spud Date: 2/9/1979 00:00
BH Coord X: 6,152,305.42uss ft
BH Coord Y: 2,289,980.06uss ft

Casing Shoes (ft)	Schematic (2/1/2008)	Openings Top/Btm/Type/Status

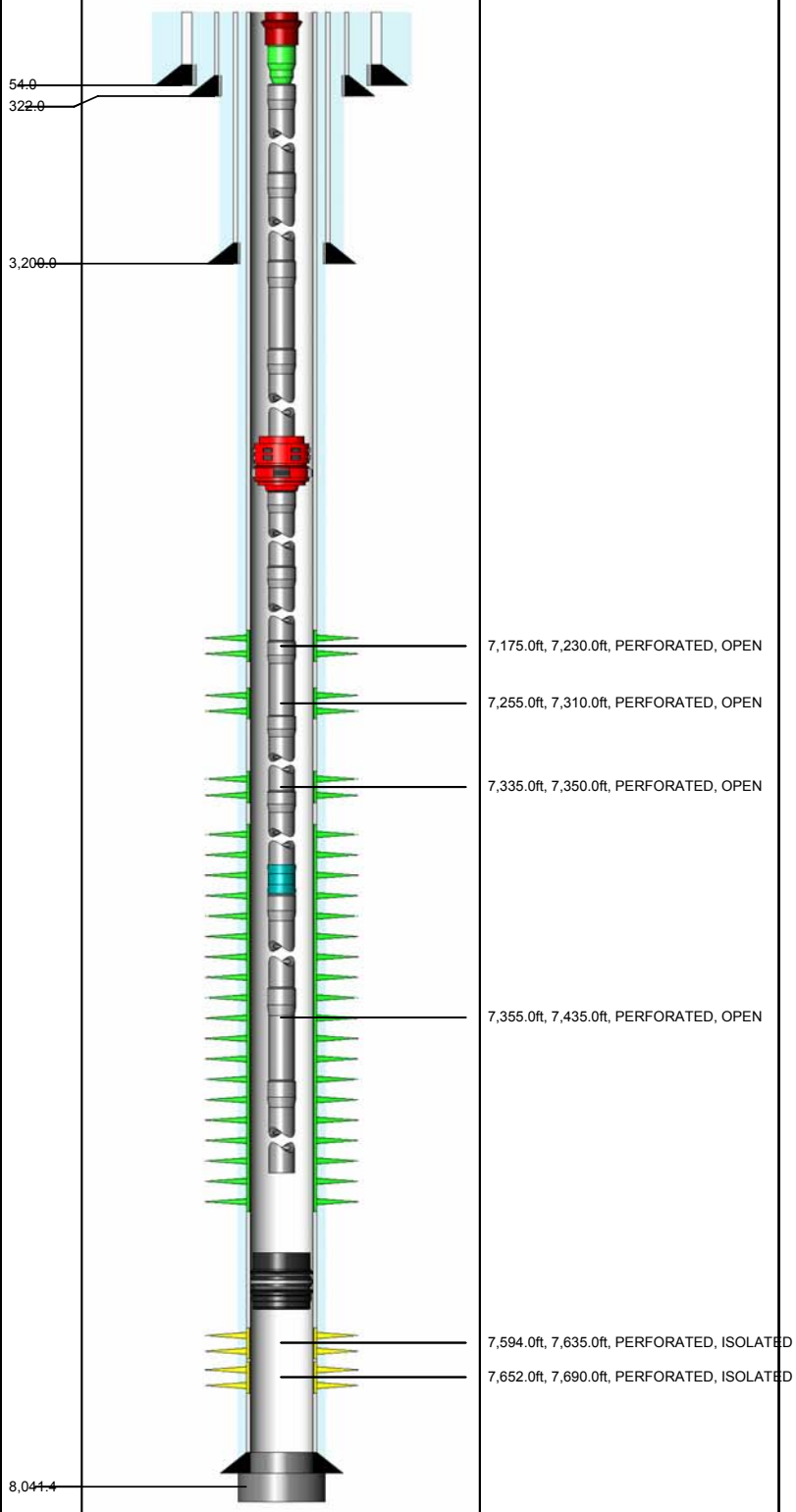

Job Type: PRIMARY

Top MD (ft)	Base MD (ft)	Plugged
14.0	54.0	

Job Type: PRIMARY

Top MD (ft)	Base MD (ft)	Plugged
14.0	322.0	

Job Type: PRIMARY

Top MD (ft)	Base MD (ft)	Plugged
14.0	3,200.0	

Job Type: PRIMARY

Top MD (ft)	Base MD (ft)	Plugged
14.0	8,040.0	

CONDUCTOR CASING Report Date: 2/9/1979 00:00

Item	OD (in)	Grade	Wt. (ppf)	TopMD (ft)	BtmMD (ft)
CASING JOINT(S)	20.000			14.0	54.0

SURFACE CASING Report Date: 6/14/1979 00:00

Item	OD (in)	Grade	Wt. (ppf)	TopMD (ft)	BtmMD (ft)
CASING JOINT(S)	13.375	H-40	48.00	14.0	322.0

INTERMEDIATE CASING Report Date: 6/18/1979 00:00

Item	OD (in)	Grade	Wt. (ppf)	TopMD (ft)	BtmMD (ft)
CASING JOINT(S)	9.625	K-55	40.00	14.0	3,198.8
FLOAT SHOE	9.625	K-55	40.00	3,198.8	3,200.0

PRODUCTION CASING Report Date: 7/12/1979 00:00

Item	OD (in)	Grade	Wt. (ppf)	TopMD (ft)	BtmMD (ft)
CASING JOINT(S)	7.000	N-80	26.00	14.0	75.2
CASING JOINT(S)	7.000	K-55	23.00	75.2	5,008.2
CASING JOINT(S)	7.000	N-80	26.00	5,008.2	6,551.1
FLAG JOINT	7.000	N-80	26.00	6,551.1	6,568.9
CASING JOINT(S)	7.000	N-80	26.00	6,568.9	7,994.8
FLOAT COLLAR	7.000	N-80	26.00	7,994.8	7,996.2
CASING JOINT(S)	7.000	N-80	26.00	7,996.2	8,037.9
FLOAT SHOE	7.000	N-80	26.00	8,037.9	8,040.0

Well: 333-35S S/T/R: 35S/30S/24E

CASING CEMENT DETAIL
- - -
Sfc Csg. Cmt Vol.: 410 cft
Hole Size: 17.5
Top Job: no
Rtns to Sfc: 10 cf
TTOC: SURFACE
- - -

Interm Csg. Cmt Vol.: 1630 cf
Hole Size: 12.25"
Top Job: yes
Rtns to Sfc: NONE
TTOC: SURFACE
- - -

Prod. Csg. Cmt Vol.: 1550 cft
Hole Size: 8.75"
Top Job: no
Rtns to Sfc: NONE
TTOC: SURFACE

Liner Cmt Vol.:
Hole Size:
Top Job:
Rtns to Sfc:
TTOC:
- - -
Top of Formation:
UBA: 7134'
BLW: 7578'

Volume Behind Pipe:
1.3 Yield Assumed
Theoretical Calculations (TTOC)

OCCIDENTAL OF ELK HILLS INC

333-3G

Event: WELL MAINT - RIGLESS
Event End: 9/16/2004 00:00
Sec. Reason: INJECTION PROFILESURVEY

Ground Level: 927.0ft
Datum: ORIGINAL KB @ 943.00ft (default)
API No.: 0402953880

Wellbore: ORIGINAL HOLE
PBMD: 7,653.0ft
Btm TMD: 8,010.0ft
Spud Date: 9/22/1976 00:00
BH Coord X: 6,147,068.90uss ft
BH Coord Y: 2,285,093.20uss ft

Casing Shoes (ft) | Schematic (10/1/2004) | Openings Top/Btm/Type/Status

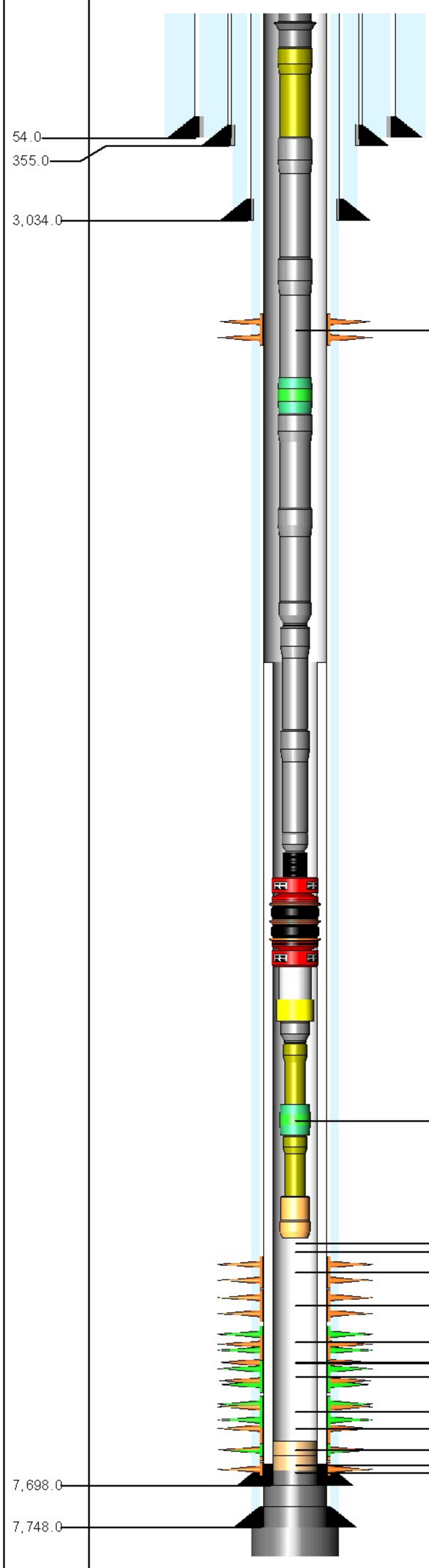

PACKER

6,405.0ft, 6,406.0ft, PERFORATED, SQUEEZ

7,060.0ft, 7,088.0ft, SQZ PERFS, SQUEEZE

7,100.0ft, 7,168.0ft, SQZ PERFS, SQUEEZE
7,185.0ft, 7,252.0ft, SQZ PERFS, SQUEEZE
7,185.1ft, 7,252.1ft, SQZ PERFS, SQUEEZE
7,264.0ft, 7,334.0ft, PERFORATED, SQUEEZ
7,264.1ft, 7,334.1ft, SQZ PERFS, SQUEEZE
7,344.0ft, 7,390.0ft, PERFORATED, SQUEEZ
7,344.1ft, 7,390.1ft, SQZ PERFS, SQUEEZE
7,415.0ft, 7,451.0ft, PERFORATED, OPEN
7,425.0ft, 7,470.0ft, PERFORATED, SQUEEZ
7,425.1ft, 7,470.1ft, SQZ PERFS, SQUEEZE
7,460.0ft, 7,471.0ft, PERFORATED, OPEN
7,480.0ft, 7,495.0ft, PERFORATED, OPEN
7,480.0ft, 7,574.0ft, PERFORATED, SQUEEZ
7,518.0ft, 7,538.0ft, PERFORATED, OPEN
7,590.0ft, 7,626.0ft, PERFORATED, SQUEEZ
7,640.0ft, 7,670.0ft, PERFORATED, SQUEEZ

TUBING STRING Report Date: 12/7/2001 00:00

Component	Top MD (ft)	Btm MD (ft)
TH-SGL	16.0	16.6
PUPJNT	16.6	29.4
TBGJNT	29.4	6,794.3
LNDNIP	6,794.3	6,795.6
TBGJNT	6,795.6	6,823.7
XO	6,823.7	6,824.6
TBGJNT	6,824.6	7,035.7
XO	7,035.7	7,036.5
SA	7,036.5	7,048.6

PACKER ASSEMBLY (PERMANENT) Report Date: 12/7/2001 00:00

Component	Top MD (ft)	Btm MD (ft)
PKR-S	7,048.6	7,051.0
SBEXT	7,051.0	7,058.6
MOEXT	7,058.6	7,068.6
XO	7,068.6	7,069.3
PUPJNT	7,069.3	7,075.3
LNDNIP	7,075.3	7,076.5
PUPJNT	7,076.5	7,082.5
WLREG	7,082.5	7,083.0

PLUG BACK Report Date: 9/16/2004 00:00

Component	Top MD (ft)	Btm MD (ft)
FILL	7,514.0	7,534.0

PLUG BACK Report Date: 2/11/2004 00:00

Component	Top MD (ft)	Btm MD (ft)
FILL	7,534.0	7,653.0

PLUG BACK Report Date: 12/7/2001 00:00

Component	Top MD (ft)	Btm MD (ft)
CEMENT	7,653.0	7,698.0

PLUG BACK Report Date: 12/4/2001 00:00

Component	Top MD (ft)	Btm MD (ft)
CEMENT	7,698.0	7,700.0

PLUG BACK Report Date: 12/1/2001 00:00

Component	Top MD (ft)	Btm MD (ft)
CEMENT	7,700.0	7,748.0

PLUG BACK Report Date: 1/4/1977 00:00

Component	Top MD (ft)	Btm MD (ft)
CEMENT	7,748.0	8,010.0

CONDUCTOR CASING Report Date: 9/22/1976 00:00

Item	OD (in)	Grade	Wt. (ppf)	TopMD (ft)	BtmMD (ft)
CASING JOINT(S)	20.000			16.0	54.0

SURFACE CASING Report Date: 12/7/1976 00:00

Item	OD (in)	Grade	Wt. (ppf)	TopMD (ft)	BtmMD (ft)
CASING JOINT(S)	13.375	H-40	48.00	16.0	355.0

INTERMEDIATE CASING Report Date: 12/12/1976 00:00

Item	OD (in)	Grade	Wt. (ppf)	TopMD (ft)	BtmMD (ft)
CASING JOINT(S)	9.625	K-55	40.00	16.0	3,034.0

PRODUCTION CASING Report Date: 1/4/1977 00:00

Item	OD (in)	Grade	Wt. (ppf)	TopMD (ft)	BtmMD (ft)
CASING JOINT(S)	7.000	K-55	26.00	16.0	78.2
CASING JOINT(S)	7.000	K-55	23.00	78.2	4,832.1
CASING JOINT(S)	7.000	K-55	26.00	4,832.1	6,745.2
FLAG JOINT	7.000	K-55	26.00	6,745.2	6,760.1
CASING JOINT(S)	7.000	K-55	26.00	6,760.1	7,703.0
FLOAT COLLAR	7.000	K-55	26.00	7,703.0	7,705.0
CASING JOINT(S)	7.000	K-55	26.00	7,705.0	7,745.6
FLOAT SHOE	7.000	K-55	26.00	7,745.6	7,748.0

INNER LINER Report Date: 12/4/2001 00:00

Item	OD (in)	Grade	Wt. (ppf)	TopMD (ft)	BtmMD (ft)
LINER HANGER	6.276	N-80		6,874.2	6,887.9
CASING JOINT(S)	5.000	N-80	15.00	6,887.9	7,653.4
LANDING COLLAR	5.000	N-80		7,653.4	7,654.6
CASING JOINT(S)	5.000	N-80	15.00	7,654.6	7,695.4
FLOAT SHOE	5.000			7,695.4	7,698.0

Well: 333-3G S/T/R: 3G/30S/24E

CASING CEMENT DETAIL
- - -
Sfc Csg. Cmt Vol.: 377 cf
Hole Size: 17.5
Top Job: no
Rtns to Sfc: 25 cf
TOC: sfc
- - -

Interm Csg. Cmt Vol.: 1546 cf
Hole Size: 12.25
Top Job: no
Rtns to Sfc: 175 cf
TOC: sfc
- - -

Prod. Csg. Cmt Vol.: 2200 cf
Hole Size: 8.75
Top Job: no
Rtns to Sfc: 100 cf
TOC: sfc

Liner Cmt Vol.:
Hole Size:
Top Job:
Rtns to Sfc:
TOC:
- - -
Top of Formation:
UBA: 7067'
BLW: 7732'

Volume Behind Pipe:
1.3 Yield Assumed
Theoretical Calculations (TTOC)

Event: WELL MAINT - RIG
Event End: 8/24/2007 00:00
Sec. Reason: PITTED
End Status: FINISHED - SUCCESS
Well Classification: DEVELOPMENT

OCCIDENTAL OF ELK HILLS INC

333A-34S

Ground Level: 886.0ft
Datum: ORIGINAL KB @ 900.00ft (KEY 0314)(default)
API No.: 0402964986

Wellbore: ST1
PBMD: 7,516.0ft
Btm TMD: 7,565.0ft
Spud Date: 7/8/1981 00:00
BH Coord X: 6,147,063.08uss ft
BH Coord Y: 2,289,446.17uss ft

Casing Shoes (ft) | Schematic (9/1/2007) | Openings Top/Btm/Type/Status

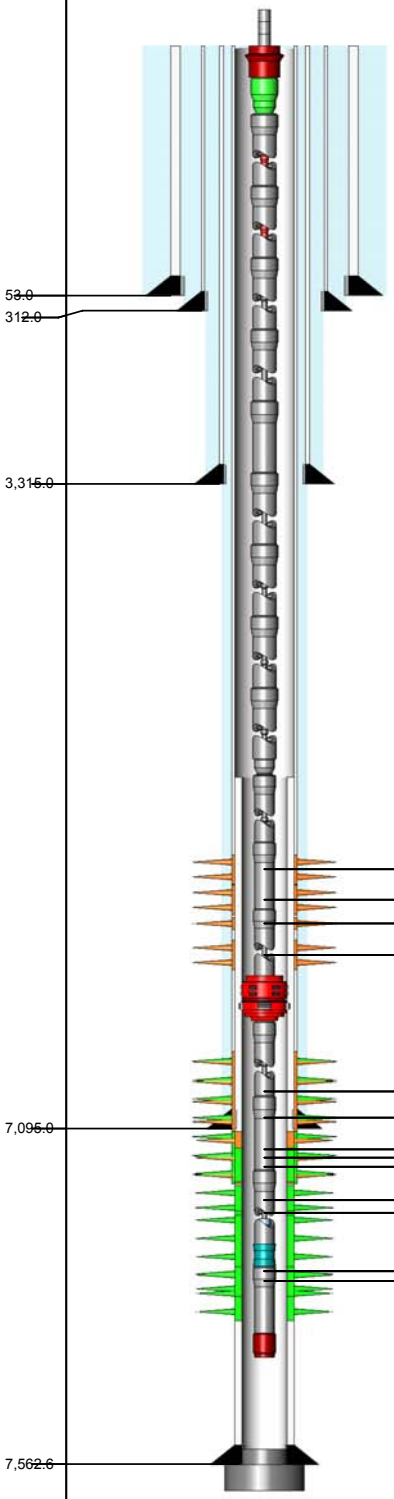

6,730.0ft, 6,758.0ft, PERFORATED, SQUEE
6,772.0ft, 6,814.0ft, PERFORATED, SQUEE
6,830.0ft, 6,850.0ft, PERFORATED, SQUEE
6,880.0ft, 6,910.0ft, PERFORATED, SQUEE
7,050.0ft, 7,100.0ft, PERFORATED, SQUEE
7,050.0ft, 7,190.0ft, PERFORATED, OPEN
7,120.0ft, 7,130.0ft, PERFORATED, OPEN
7,100.0ft, 7,190.0ft, PERFORATED, SQUEE
7,150.0ft, 7,160.0ft, PERFORATED, OPEN
7,215.0ft, 7,250.0ft, PERFORATED, OPEN
7,215.0ft, 7,250.0ft, PERFORATED, OPEN
7,245.0ft, 7,250.0ft, PERFORATED, OPEN
7,275.0ft, 7,343.0ft, PERFORATED, OPEN
7,275.0ft, 7,343.0ft, PERFORATED, OPEN
7,300.0ft, 7,305.0ft, PERFORATED, OPEN

ROD STRING Report Date: 6/14/2007 00:00

Component	Top MD (ft)	Btm MD (ft)
POLROD	0.0	30.0
PNYROD	30.0	42.0
ROD	42.0	2,352.0
ROD	2,352.0	4,392.0
R-4PER	4,392.0	4,932.0
ROD	4,932.0	7,272.0
INSPMP	7,272.0	7,296.0

TUBING STRING Report Date: 6/13/2007 00:00

Component	Top MD (ft)	Btm MD (ft)
TH-DBB	14.0	14.8
FATNIP	14.8	15.4
CAS	15.4	6,536.3
XO	6,536.3	6,537.4
CAS	6,537.4	6,980.6
AC	6,980.6	6,984.1
CAS	6,984.1	7,298.8
STNIP	7,298.8	7,299.5
CAS	7,299.5	7,362.0
STCOLL	7,362.0	7,362.4

PLUG BACK Report Date: 12/12/1982 00:00

Component	Top MD (ft)	Btm MD (ft)
CEMENT	7,516.0	7,562.6

PLUG BACK Report Date: 12/10/1982 00:00

Component	Top MD (ft)	Btm MD (ft)
CEMENT	7,562.6	7,565.0

CONDUCTOR CASING Report Date: 7/8/1981 00:00

Item	OD (in)	Grade	Wt. (ppf)	TopMD (ft)	BtmMD (ft)
CASING JOINT(S)	20.000			14.0	53.0

SURFACE CASING Report Date: 7/10/1981 00:00

Item	OD (in)	Grade	Wt. (ppf)	TopMD (ft)	BtmMD (ft)
CASING JOINT(S)	13.375	H-40	48.00	14.0	312.0

INTERMEDIATE CASING Report Date: 7/19/1981 00:00

Item	OD (in)	Grade	Wt. (ppf)	TopMD (ft)	BtmMD (ft)
CASING JOINT(S)	9.625	K-55	40.50	14.0	3,315.0

PRODUCTION CASING Report Date: 8/5/1981 00:00

Item	OD (in)	Grade	Wt. (ppf)	TopMD (ft)	BtmMD (ft)
CASING JOINT(S)	7.000	K-55	26.00	14.0	75.6
CASING JOINT(S)	7.000	K-55	23.00	75.6	5,114.7
CASING JOINT(S)	7.000	K-55	26.00	5,114.7	6,402.3
FLAG JOINT	7.000	K-55	26.00	6,402.3	6,425.9
CASING JOINT(S)	7.000	K-55	26.00	6,425.9	7,048.9
FLOAT COLLAR	7.000	K-55	26.00	7,048.9	7,051.1
CASING JOINT(S)	7.000	K-55	26.00	7,051.1	7,092.5
FLOAT SHOE	7.000	K-55	26.00	7,092.5	7,095.0

LINER Report Date: 12/10/1982 00:00

Item	OD (in)	Grade	Wt. (ppf)	TopMD (ft)	BtmMD (ft)
LINER HANGER	6.276	K-55	20.00	6,595.0	6,597.3
CROSSOVER	6.276	K-55	20.00	6,597.3	6,598.8
CASING JOINT(S)	5.500	K-55	20.00	6,598.8	6,840.2
FLAG JOINT	5.500	K-55	20.00	6,840.2	6,859.3
CASING JOINT(S)	5.500	K-55	20.00	6,859.3	7,096.5
CROSSOVER	5.500	K-55	20.00	7,096.5	7,123.1
CASING JOINT(S)	5.500	K-55	20.00	7,123.1	7,516.5
FLOAT COLLAR	5.500	K-55	20.00	7,516.5	7,518.4
CASING JOINT(S)	5.500	K-55	20.00	7,518.4	7,560.3
GUIDE SHOE	5.500	K-55	20.00	7,560.3	7,562.6

Well: 333A-34S S/T/R: 34S/30S/24E

CASING CEMENT DETAIL
- - -
Sfc Csg. Cmt Vol.: 500 cf
Hole Size: 17.5"
Top Job: no
Rtns to Sfc: 15 cf
TOC: sfc
- - -

Interm Csg. Cmt Vol.: 1600 cf
Hole Size: 12.25"
Top Job: no
Rtns to Sfc: 80 cf
TOC: sfc
- - -

Prod. Csg. Cmt Vol.: 1710
Hole Size: 8.75"
Top Job: no
Rtns to Sfc: no
TTOC: sfc
- - -

Liner Cmt Vol.: 225 cf
Hole Size: 8.5"
Top Job: no
Rtns to Sfc: trace
TTOC: TOL
- - -
Top of Formation:
UBA: 7045'
BLW: 7367'

Volume Behind Pipe:
1.3 Yield Assumed
Theoretical Calculations (TTOC)

OCCIDENTAL OF ELK HILLS INC

334-35S

Event: WELL MAINT - RIG
Event End: 9/7/2008 00:00
Sec. Reason: PIN PART

Ground Level: 771.0ft
Datum: ORIGINAL KB @ 781.00ft (default)
API No.: 0402927775

Wellbore: ORIGINAL HOLE
PBMD: 7,502.0ft
Btm TMD: 7,550.0ft
Spud Date: 8/12/1953 00:00
BH Coord X: 6,152,368.52uss ft
BH Coord Y: 2,289,412.64uss ft

Casing Shoes (ft)	Schematic (9/7/2008)	Openings Top/Btm/Type/Status

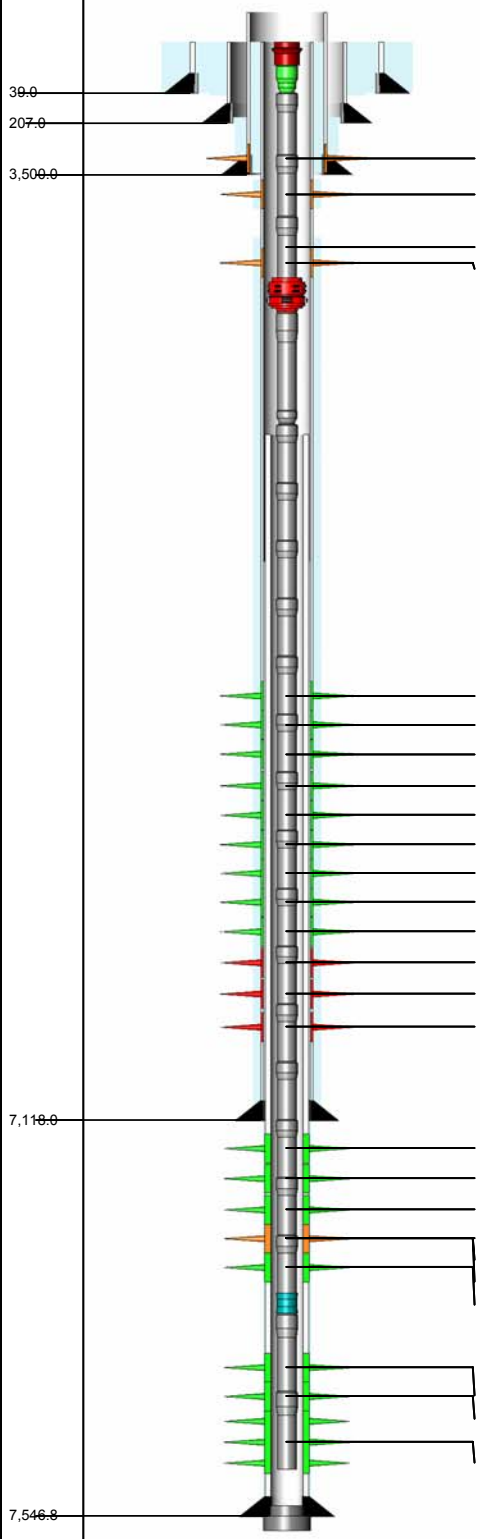

3,370.0ft, 3,371.0ft, PERFORATED, SQUEEZED
3,840.0ft, 3,841.0ft, PERFORATED, SQUEEZED
6,335.0ft, 6,336.0ft, WSO PERFS, SQUEEZED
6,434.0ft, 6,435.0ft, PERFORATED, SQUEEZED
6,765.0ft, 6,768.0ft, PERFORATED, OPEN
6,768.0ft, 6,771.0ft, PERFORATED, OPEN
6,776.0ft, 6,782.0ft, PERFORATED, OPEN
6,803.0ft, 6,806.0ft, PERFORATED, OPEN
6,806.0ft, 6,808.0ft, PERFORATED, OPEN
6,812.0ft, 6,816.0ft, PERFORATED, OPEN
6,816.0ft, 6,819.0ft, PERFORATED, OPEN
6,819.0ft, 6,824.0ft, PERFORATED, OPEN
6,829.0ft, 6,835.0ft, PERFORATED, OPEN
6,850.0ft, 6,885.0ft, PERFORATED, ABANDONE
6,900.0ft, 7,002.0ft, PERFORATED, ABANDONE
7,016.0ft, 7,072.0ft, PERFORATED, ABANDONE
7,232.0ft, 7,256.0ft, PERFORATED, OPEN
7,265.0ft, 7,292.0ft, PERFORATED, OPEN
7,303.0ft, 7,306.0ft, PERFORATED, OPEN
7,306.0ft, 7,310.0ft, PERFORATED, OPEN
7,306.0ft, 7,310.0ft, REPERFORATED, OPEN
7,306.0ft, 7,310.0ft, PERFORATED, SQUEEZED
7,310.0ft, 7,353.0ft, PERFORATED, OPEN
7,368.0ft, 7,380.0ft, PERFORATED, OPEN
7,380.0ft, 7,385.0ft, PERFORATED, OPEN
7,385.0ft, 7,400.0ft, PERFORATED, OPEN

Job Type	Top MD (ft)	Base MD (ft)	Plugged
PRIMARY	10.0	39.0	
PRIMARY	10.0	207.0	
PRIMARY	1,600.0	3,500.0	
PRIMARY	5,700.0	7,118.0	
SQUEEZE	3,764.0	3,841.0	
SQUEEZE	10.0	3,371.0	
SQUEEZE	6,796.0	7,079.0	
PRIMARY	6,632.0	7,546.8	N
SQUEEZE	7,306.0	7,385.0	

CONDUCTOR CASING — Report Date: 8/12/1953 00:00

Item	OD (in)	Grade	Wt. (ppf)	TopMD (ft)	BtmMD (ft)
CASING JOINT(S)	26.000		68.00	10.0	39.0

SURFACE CASING — Report Date: 9/22/1953 00:00

Item	OD (in)	Grade	Wt. (ppf)	TopMD (ft)	BtmMD (ft)
CASING JOINT(S)	16.000	H-40	65.00	10.0	207.0

INTERMEDIATE CASING — Report Date: 9/27/1953 00:00

Item	OD (in)	Grade	Wt. (ppf)	TopMD (ft)	BtmMD (ft)
CASING JOINT(S)	10.750	J-55	45.50	10.0	75.0
CASING JOINT(S)	10.750	J-55	40.50	75.0	2,470.0
CASING JOINT(S)	10.750	J-55	45.50	2,470.0	3,500.0

PRODUCTION CASING — Report Date: 10/14/1953 00:00

Item	OD (in)	Grade	Wt. (ppf)	TopMD (ft)	BtmMD (ft)
CASING JOINT(S)	7.000	N-80	26.00	10.0	52.0
CASING JOINT(S)	7.000	N-80	23.00	52.0	5,909.0
CASING JOINT(S)	7.000	S-95	26.00	5,909.0	7,116.0
FLOAT SHOE	7.000			7,116.0	7,118.0

LINER — Report Date: 8/4/2002 00:00

Item	OD (in)	Grade	Wt. (ppf)	TopMD (ft)	BtmMD (ft)
LINER HANGER PACKER	5.875			6,610.0	6,631.6
LINER HANGER	5.934			6,631.6	6,637.3
PBR	5.520			6,637.3	6,640.6
CROSSOVER	5.520			6,640.6	6,641.7
CASING JOINT(S)	5.000	N-80	15.00	6,641.7	7,502.3
LANDING COLLAR	4.550			7,502.3	7,503.5
CASING JOINT(S)	5.000	N-80	15.00	7,503.5	7,544.0
FLOAT SHOE	4.550			7,544.0	7,546.8

Well: 334-35S S/T/R: 35S/30S/24E

CASING CEMENT DETAIL
- - -
Sfc Csg. Cmt Vol.: 500 sx
Hole Size: 22"
Top Job: no
Rtns to Sfc: No
TTOC: Surface
- - -

Interm Csg. Cmt Vol.: 800 sx
Hole Size: 15"
Top Job: no
Rtns to Sfc: No
TTOC: 1758'
- - -

Prod. Csg. Cmt Vol.: 500 sx
Hole Size: 9.75"
Top Job: no
Rtns to Sfc: No
TTOC: 5700'

Liner Cmt Vol.: 117 sx
Hole Size: 7"
Top Job: no
Rtns to Sfc: No
TTOC: 5582'
- - -
Top of Formation:
UBA: 6938'
BLW: 7451"

Volume Behind Pipe:
1.3 Yield Assumed
Theoretical Calculations (TTOC)

Event: WELL MAINT - RIG
Event End: 4/17/2007 00:00
Sec. Reason:
End Status: FINISHED - SUCCESS
Well Classification: INJECTION

OCCIDENTAL OF ELK HILLS INC

335-34S

Ground Level: 944.0ft
Datum: ORIGINAL KB @ 958.00ft (default)
API No.: 0402953715

Wellbore: ST1
PBMD: 7,197.0ft
Btm TMD: 8,000.0ft
Spud Date: 9/8/1976 00:00
BH Coord X: 6,147,082.28uss ft
BH Coord Y: 2,288,859.58uss ft

Casing Shoes (ft)	Schematic (5/1/2007)	Openings Top/Btm/Type/Status
54.0		
307.0		
3,243.0		
		6,230.0ft, 6,231.0ft, WSO PERFS, SQUEEZ
		6,600.0ft, 6,660.0ft, PERFORATED, SQUEE
		6,690.0ft, 6,755.0ft, PERFORATED, SQUEE
		6,770.0ft, 6,840.0ft, PERFORATED, SQUEE
		6,865.0ft, 6,925.0ft, PERFORATED, OPEN
		6,935.0ft, 6,995.0ft, PERFORATED, OPEN
		7,005.0ft, 7,115.0ft, PERFORATED, OPEN
		7,140.0ft, 7,174.0ft, PERFORATED, OPEN
		7,140.0ft, 7,174.0ft, REPERFORATED, OPE
		7,188.5ft, 7,209.5ft, PERFORATED, OPEN
		7,230.0ft, 7,250.0ft, PERFORATED, OPEN
		7,240.0ft, 7,260.0ft, PERFORATED, OPEN
7,347.0		

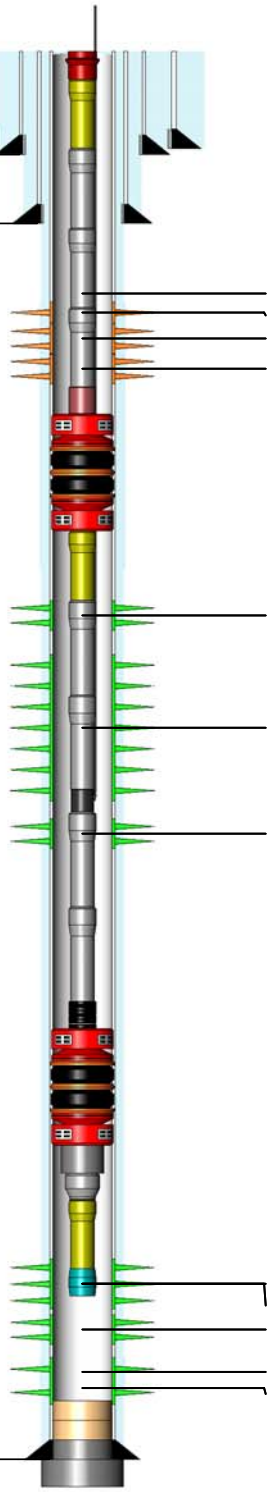

TUBING STRING — Report Date: 6/7/2002 00:00

Component	Top MD (ft)	Btm MD (ft)
TH-DBB	14.0	14.8
PUPJNT	14.8	37.8
TBGJNT	37.8	6,848.9
ON-OFF	6,848.9	6,850.3
PKR-S	6,850.3	6,854.4
PUPJNT	6,854.4	6,864.5
TBGJNT	6,864.5	6,990.3
INJM-D	6,990.3	6,999.4
TBGJNT	6,999.4	7,125.1
SA	7,125.1	7,125.6
PKR-S	7,125.6	7,130.1
CAS	7,130.1	7,134.2
XO	7,134.2	7,134.8
PUPJNT	7,134.8	7,140.8
PNIP-O	7,140.8	7,142.3

PLUG BACK — Report Date: 5/3/2005 00:00

Component	Top MD (ft)	Btm MD (ft)
FILL	7,252.0	7,297.0

PLUG BACK — Report Date: 2/4/2004 00:00

Component	Top MD (ft)	Btm MD (ft)
FILL	7,297.0	7,300.0

PLUG BACK — Report Date: 1/1/1977 00:00

Component	Top MD (ft)	Btm MD (ft)
CEMENT	7,300.0	7,347.0

PLUG BACK — Report Date: 12/31/1976 00:00

Component	Top MD (ft)	Btm MD (ft)
CEMENT	7,347.0	8,000.0

CONDUCTOR CASING — Report Date: 9/8/1976 00:00

Item	OD (in)	Grade	Wt. (ppf)	TopMD (ft)	BtmMD (ft)
CASING JOINT(S)	20.000			14.0	54.0

SURFACE CASING — Report Date: 11/22/1976 00:00

Item	OD (in)	Grade	Wt. (ppf)	TopMD (ft)	BtmMD (ft)
CASING JOINT(S)	13.375	K-55	48.00	14.0	307.0

INTERMEDIATE CASING — Report Date: 11/26/1976 00:00

Item	OD (in)	Grade	Wt. (ppf)	TopMD (ft)	BtmMD (ft)
CASING JOINT(S)	9.625	K-55	40.00	14.0	3,243.0

PRODUCTION CASING — Report Date: 12/31/1976 00:00

Item	OD (in)	Grade	Wt. (ppf)	TopMD (ft)	BtmMD (ft)
CASING JOINT(S)	7.000	K-55	26.00	14.0	74.6
CASING JOINT(S)	7.000	K-55	23.00	74.6	4,520.3
CASING JOINT(S)	7.000	K-55	26.00	4,520.3	6,642.2
FLAG JOINT	7.000	K-55	26.00	6,642.2	6,655.7
CASING JOINT(S)	7.000	K-55	26.00	6,655.7	7,302.0
FLOAT COLLAR	7.000	K-55	26.00	7,302.0	7,303.9
CASING JOINT(S)	7.000	K-55	26.00	7,303.9	7,344.6
FLOAT SHOE	7.000	K-55	26.00	7,344.6	7,347.0

Well: 335-34S S/T/R: 34S/30S/24E

CASING CEMENT DETAIL
- - -
Sfc Csg. Cmt Vol.: 331 cf
Hole Size: 17.25"
Top Job: 65 sks
Rtns to Sfc: no
TTOC: sfc
- - -

Interm Csg. Cmt Vol.: 1759 cf
Hole Size: 12.25"
Top Job: no
Rtns to Sfc: 100 cf
TOC: sfc
- - -

Prod. Csg. Cmt Vol.: 2990 cf
Hole Size: 8.75"
Top Job: no
Rtns to Sfc: no
TTOC: sfc
- - -

Liner Cmt Vol.:
Hole Size:
Top Job:
Rtns to Sfc :
TTOC:
- - -
Top of Formation:
UBA: 6862'
BLW: 7281'

Volume Behind Pipe:
1.3 Yield Assumed
Theoretical Calculations (TTOC)

Event: WELL MAINT - RIGLESS
Event End: 2/25/2009 00:00
Sec. Reason:
End Status: FINISHED - SUCCESS
Well Classification: EXPLORATION

OCCIDENTAL OF ELK HILLS INC

335-35S

Ground Level: 782.0ft
Datum: ORIGINAL KB @ 796.00ft (default)
API No.: 0402958896

Wellbore: ORIGINAL HOLE
PBMD: 6,197.0ft
Btm TMD: 8,250.0ft
Spud Date: 2/9/1979 00:00
BH Coord X: 6,152,414.16uss ft
BH Coord Y: 2,288,718.38uss ft

Casing Shoes (ft)	Schematic (3/1/2009)	Openings Top/Btm/Type/Status

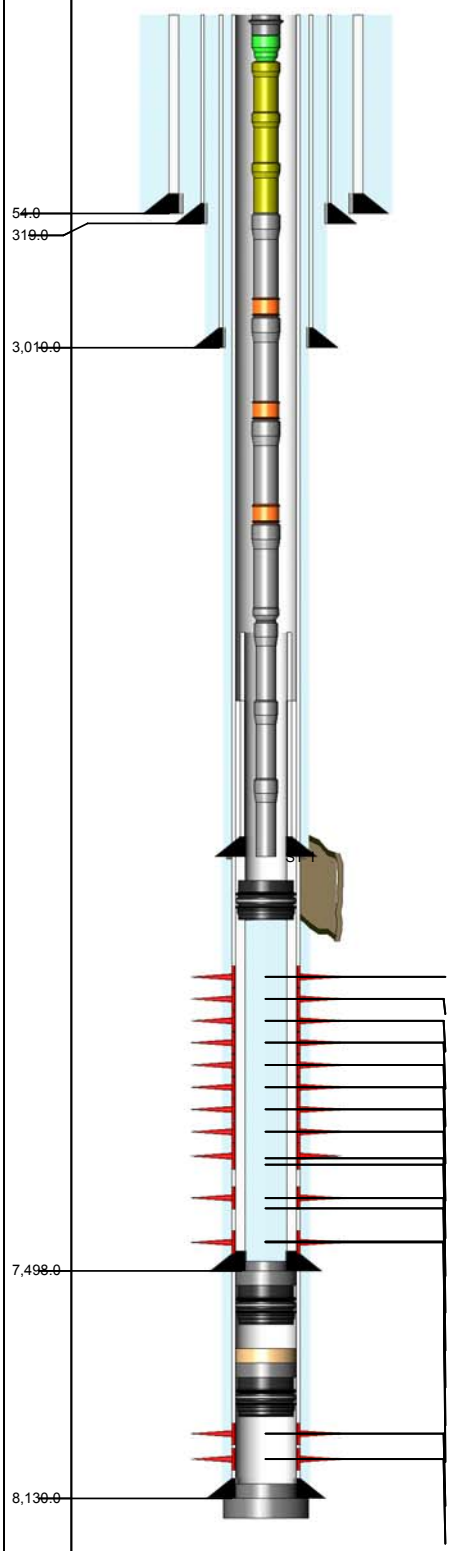

6,740.0ft, 6,750.0ft, PERFORATED, ABANDO
6,770.0ft, 6,784.0ft, PERFORATED, ABANDO
6,794.0ft, 6,825.0ft, PERFORATED, ABANDO
6,835.0ft, 6,845.0ft, PERFORATED, ABANDO
6,880.0ft, 6,928.0ft, PERFORATED, ABANDO
6,951.0ft, 6,985.0ft, PERFORATED, ABANDO
7,005.0ft, 7,085.0ft, PERFORATED, ABANDO
7,110.0ft, 7,170.0ft, PERFORATED, ABANDO
7,190.0ft, 7,218.0ft, PERFORATED, ABANDO
7,180.0ft, 7,228.0ft, PERFORATED, ABANDO
7,240.0ft, 7,296.0ft, PERFORATED, ABANDO
7,238.0ft, 7,310.0ft, PERFORATED, ABANDO
7,320.0ft, 7,342.0ft, PERFORATED, ABANDO
7,320.0ft, 7,360.0ft, PERFORATED, ABANDO
7,950.0ft, 7,990.0ft, PERFORATED, ABANDO
8,010.0ft, 8,035.0ft, PERFORATED, ABANDO

TUBING STRING Report Date: 8/24/2002 00:00

Component	Top MD (ft)	Btm MD (ft)
TH-SGL	14.0	14.6
FATNIP	14.6	15.9
PUPJNT	15.9	20.0
PUPJNT	20.0	26.0
PUPJNT	26.0	36.0
TBGJNT	36.0	2,291.5
GLM-V	2,291.5	2,300.4
TBGJNT	2,300.4	4,209.8
GLM-V	4,209.8	4,218.2
TBGJNT	4,218.2	5,598.1
GLM-V	5,598.1	5,607.0
TBGJNT	5,607.0	5,856.9
XO	5,856.9	5,858.0
TBGJNT	5,858.0	6,637.3
GLM-V	6,637.3	6,644.0
TBGJNT	6,644.0	6,675.4
ON-OFF	6,675.4	6,676.6
PKR-S	6,676.6	6,681.8
PUPJNT	6,681.8	6,691.9
PUPJNT	6,691.9	6,699.9
BJ	6,699.9	6,709.8
PUPJNT	6,709.8	6,719.9
PUPJNT	6,719.9	6,729.9
PUPJNT	6,729.9	6,733.9
BJ	6,733.9	6,753.8
PUPJNT	6,753.8	6,763.8
TBGJNT	6,763.8	6,951.1
SS-C	6,951.1	6,955.1
PUPJNT	6,955.1	6,965.0
PUPJNT	6,965.0	6,975.0
TBGJNT	6,975.0	7,099.6
LOCSUB	7,099.6	7,100.6
PKR-S	7,100.6	7,106.7
PUPJNT	7,106.7	7,112.8
PNIP-O	7,112.8	7,114.2
PUPJNT	7,114.2	7,120.3
BELCOL	7,120.3	7,120.8

PLUG BACK Report Date: 6/1/2002 00:00

Component	Top MD (ft)	Btm MD (ft)
BP-DR	6,197.0	6,200.0

PLUG BACK Report Date: 2/4/1996 00:00

Component	Top MD (ft)	Btm MD (ft)
CEMENT	7,449.0	7,498.0

PLUG BACK Report Date: 2/2/1996 00:00

Component	Top MD (ft)	Btm MD (ft)
CEMENT	7,498.0	7,500.0
BP-DR	7,500.0	7,503.0

PLUG BACK Report Date: 2/1/1996 00:00

Component	Top MD (ft)	Btm MD (ft)
FILL	7,876.0	7,893.0

PLUG BACK Report Date: 4/17/1980 00:00

Component	Top MD (ft)	Btm MD (ft)
CEMENT	7,893.0	7,900.0
BP-DR	7,900.0	7,903.0

PLUG BACK Report Date: 4/29/1979 00:00

Component	Top MD (ft)	Btm MD (ft)
CEMENT	8,085.0	8,130.0

PLUG BACK Report Date: 4/28/1979 00:00

Component	Top MD (ft)	Btm MD (ft)
CEMENT	8,130.0	8,250.0

CONDUCTOR CASING Report Date: 2/9/1979 00:00

Item	OD (in)	Grade	Wt. (ppf)	TopMD (ft)	BtmMD (ft)
CASING JOINT(S)	20.000			14.0	54.0

SURFACE CASING Report Date: 3/21/1979 00:00

Item	OD (in)	Grade	Wt. (ppf)	TopMD (ft)	BtmMD (ft)
CASING JOINT(S)	13.375	H-40	48.00	14.0	319.0

INTERMEDIATE CASING Report Date: 3/25/1979 00:00

Item	OD (in)	Grade	Wt. (ppf)	TopMD (ft)	BtmMD (ft)
CASING JOINT(S)	9.625	K-55	40.00	14.0	3,010.0

PRODUCTION CASING Report Date: 4/28/1979 00:00

Item	OD (in)	Grade	Wt. (ppf)	TopMD (ft)	BtmMD (ft)
CASING JOINT(S)	7.000	N-80	26.00	14.0	78.4
CASING JOINT(S)	7.000	K-55	23.00	78.4	5,083.2
CASING JOINT(S)	7.000	K-55	26.00	5,083.2	7,630.9
CASING JOINT(S)	7.000	N-80	26.00	7,630.9	8,130.0

INNER LINER Report Date: 2/2/1996 00:00

Item	OD (in)	Grade	Wt. (ppf)	TopMD (ft)	BtmMD (ft)
LINER HANGER	6.276	N-80	18.00	6,498.5	6,505.6
CASING JOINT(S)	5.000	N-80	18.00	6,505.6	7,449.3
FLOAT COLLAR	5.000	N-80	18.00	7,449.3	7,450.6
CASING JOINT(S)	5.000	N-80	18.00	7,450.6	7,497.2
GUIDE SHOE	5.000	N-80	18.00	7,497.2	7,498.0

LINER Report Date: 7/5/2002 00:00

Item	OD (in)	Grade	Wt. (ppf)	TopMD (ft)	BtmMD (ft)
SEALBORE EXTENSION	5.250			5,907.3	5,918.6
LINER HANGER PACKER	6.276			5,918.6	5,925.4
LINER TIEBACK SEAL ASSEMBLY	5.496			5,925.4	5,928.3
LINER HANGER	6.276			5,928.3	5,934.4
CASING JOINT(S)	5.000	N-80	15.00	5,934.4	7,389.9
LANDING COLLAR	5.000	N-80		7,389.9	7,389.9
CASING JOINT(S)	5.000	N-80	15.00	7,389.9	7,430.6
FLOAT COLLAR	5.000	N-80		7,430.6	7,430.6
CASING JOINT(S)	5.000	N-80	15.00	7,430.6	7,471.2
FLOAT SHOE	5.000	N-80		7,471.2	7,473.0

Well: 335-35S S/T/R: 35S/30S/24E

CASING CEMENT DETAIL
- - -
Sfc Csg. Cmt Vol.: 370 cf
Hole Size: 17.5"
Top Job: no
Rtns to Sfc: 20 cf
TOC: sfc
- - -

Interm Csg. Cmt Vol.: 1530 cf
Hole Size: 12.25"
Top Job: no
Rtns to Sfc: 120 cf
TOC: sfc
- - -

Prod. Csg. Cmt Vol.: 3420 cf
Hole Size: 8.75"
Top Job: no
Rtns to Sfc: 130 cf
TOC: sfc
- - -

Liner Cmt Vol.:
Hole Size:
Top Job:
Rtns to Sfc:
TTOC:
- - -
Top of Formation:
UBA: 6878'
BLW: 7368'

Volume Behind Pipe:
1.3 Yield Assumed
Theoretical Calculations (TTOC)

Event: WELL MAINT - RIGLESS
Event End: 2/25/2009 00:00
Sec. Reason:
End Status: FINISHED - SUCCESS
Well Classification: EXPLORATION

OCCIDENTAL OF ELK HILLS INC

335-35S

Ground Level: 782.0ft
Datum: ORIGINAL KB @ 796.00ft (default)
API No.: 0402958896

Wellbore: ORIGINAL HOLE
PBMD: 6,197.0ft
Btm TMD: 8,250.0ft
Spud Date: 2/9/1979 00:00
BH Coord X: 6,152,414.16uss ft
BH Coord Y: 2,288,718.38uss ft

Casing Shoes (ft)	Schematic (3/1/2009)	Openings Top/Btm/Type/Status
54.0		
319.0		
3,010.0		
		6,740.0ft, 6,750.0ft, PERFORATED, ABANDO
		6,770.0ft, 6,784.0ft, PERFORATED, ABANDO
		6,794.0ft, 6,825.0ft, PERFORATED, ABANDO
		6,835.0ft, 6,845.0ft, PERFORATED, ABANDO
		6,880.0ft, 6,928.0ft, PERFORATED, ABANDO
		6,951.0ft, 6,985.0ft, PERFORATED, ABANDO
		7,005.0ft, 7,085.0ft, PERFORATED, ABANDO
		7,110.0ft, 7,170.0ft, PERFORATED, ABANDO
		7,190.0ft, 7,218.0ft, PERFORATED, ABANDO
7,498.0		7,180.0ft, 7,228.0ft, PERFORATED, ABANDO
		7,240.0ft, 7,296.0ft, PERFORATED, ABANDO
		7,238.0ft, 7,310.0ft, PERFORATED, ABANDO
		7,320.0ft, 7,342.0ft, PERFORATED, ABANDO
		7,320.0ft, 7,360.0ft, PERFORATED, ABANDO
8,130.0		7,950.0ft, 7,990.0ft, PERFORATED, ABANDO
		8,010.0ft, 8,035.0ft, PERFORATED, ABANDO

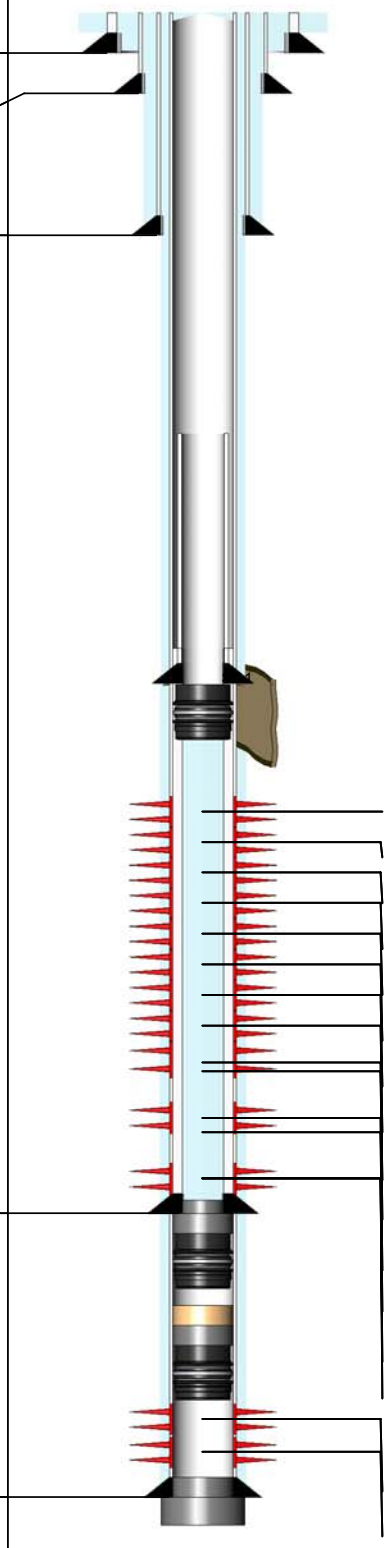

TUBING STRING Report Date: 8/24/2002 00:00

Component	Top MD (ft)	Btm MD (ft)
TH-SGL	14.0	14.6
FATNIP	14.6	15.9
PUPJNT	15.9	20.0
PUPJNT	20.0	26.0
PUPJNT	26.0	36.0
TBGJNT	36.0	2,291.5
GLM-V	2,291.5	2,300.4
TBGJNT	2,300.4	4,209.8
GLM-V	4,209.8	4,218.2
TBGJNT	4,218.2	5,598.1
GLM-V	5,598.1	5,607.0
TBGJNT	5,607.0	5,856.9
XO	5,856.9	5,858.0
TBGJNT	5,858.0	6,637.3
GLM-V	6,637.3	6,644.0
TBGJNT	6,644.0	6,675.4
ON-OFF	6,675.4	6,676.6
PKR-S	6,676.6	6,681.8
PUPJNT	6,681.8	6,691.9
PUPJNT	6,691.9	6,699.9
BJ	6,699.9	6,709.8
PUPJNT	6,709.8	6,719.9
PUPJNT	6,719.9	6,729.9
PUPJNT	6,729.9	6,733.9
BJ	6,733.9	6,753.8
PUPJNT	6,753.8	6,763.8
TBGJNT	6,763.8	6,951.1
SS-C	6,951.1	6,955.1
PUPJNT	6,955.1	6,965.0
PUPJNT	6,965.0	6,975.0
TBGJNT	6,975.0	7,099.6
LOCSUB	7,099.6	7,100.6
PKR-S	7,100.6	7,106.7
PUPJNT	7,106.7	7,112.8
PNIP-O	7,112.8	7,114.2
PUPJNT	7,114.2	7,120.3
BELCOL	7,120.3	7,120.8

PLUG BACK Report Date: 6/1/2002 00:00

Component	Top MD (ft)	Btm MD (ft)
BP-DR	6,197.0	6,200.0

PLUG BACK Report Date: 2/4/1996 00:00

Component	Top MD (ft)	Btm MD (ft)
CEMENT	7,449.0	7,498.0

PLUG BACK Report Date: 2/2/1996 00:00

Component	Top MD (ft)	Btm MD (ft)
CEMENT	7,498.0	7,500.0
BP-DR	7,500.0	7,503.0

PLUG BACK Report Date: 2/1/1996 00:00

Component	Top MD (ft)	Btm MD (ft)
FILL	7,876.0	7,893.0

PLUG BACK Report Date: 4/17/1980 00:00

Component	Top MD (ft)	Btm MD (ft)
CEMENT	7,893.0	7,900.0
BP-DR	7,900.0	7,903.0

PLUG BACK Report Date: 4/29/1979 00:00

Component	Top MD (ft)	Btm MD (ft)
CEMENT	8,085.0	8,130.0

PLUG BACK Report Date: 4/28/1979 00:00

Component	Top MD (ft)	Btm MD (ft)
CEMENT	8,130.0	8,250.0

CONDUCTOR CASING Report Date: 2/9/1979 00:00

Item	OD (in)	Grade	Wt. (ppf)	TopMD (ft)	BtmMD (ft)
CASING JOINT(S)	20.000			14.0	54.0

SURFACE CASING Report Date: 3/21/1979 00:00

Item	OD (in)	Grade	Wt. (ppf)	TopMD (ft)	BtmMD (ft)
CASING JOINT(S)	13.375	H-40	48.00	14.0	319.0

INTERMEDIATE CASING Report Date: 3/25/1979 00:00

Item	OD (in)	Grade	Wt. (ppf)	TopMD (ft)	BtmMD (ft)
CASING JOINT(S)	9.625	K-55	40.00	14.0	3,010.0

PRODUCTION CASING Report Date: 4/28/1979 00:00

Item	OD (in)	Grade	Wt. (ppf)	TopMD (ft)	BtmMD (ft)
CASING JOINT(S)	7.000	N-80	26.00	14.0	78.4
CASING JOINT(S)	7.000	K-55	23.00	78.4	5,083.2
CASING JOINT(S)	7.000	K-55	26.00	5,083.2	7,630.9
CASING JOINT(S)	7.000	N-80	26.00	7,630.9	8,130.0

INNER LINER Report Date: 2/2/1996 00:00

Item	OD (in)	Grade	Wt. (ppf)	TopMD (ft)	BtmMD (ft)
LINER HANGER	6.276	N-80	18.00	6,498.5	6,505.6
CASING JOINT(S)	5.000	N-80	18.00	6,505.6	7,449.3
FLOAT COLLAR	5.000	N-80	18.00	7,449.3	7,450.6
CASING JOINT(S)	5.000	N-80	18.00	7,450.6	7,497.2
GUIDE SHOE	5.000	N-80	18.00	7,497.2	7,498.0

LINER Report Date: 7/5/2002 00:00

Item	OD (in)	Grade	Wt. (ppf)	TopMD (ft)	BtmMD (ft)
SEALBORE EXTENSION	5.250			5,907.3	5,918.6
LINER HANGER PACKER	6.276			5,918.6	5,925.4
LINER TIEBACK SEAL ASSEMBLY	4.875			5,925.4	5,928.3
LINER HANGER	6.276			5,928.3	5,934.4
CASING JOINT(S)	5.000	N-80	15.00	5,934.4	7,389.9
LANDING COLLAR	5.000	N-80		7,389.9	7,389.9
CASING JOINT(S)	5.000	N-80	15.00	7,389.9	7,430.6
FLOAT COLLAR	5.000	N-80		7,430.6	7,430.6
CASING JOINT(S)	5.000	N-80	15.00	7,430.6	7,471.2
FLOAT SHOE	5.000	N-80		7,471.2	7,473.0

Well: 335-35S S/T/R: 35S/30S/24E

CASING CEMENT DETAIL
- - -
Sfc Csg. Cmt Vol.: 370 cft
Hole Size: 17.5"
Top Job: no
Rtns to Sfc: 20 cft
TTOC: Surface
- - -

Interm Csg. Cmt Vol.: 1530 cft
Hole Size: 12.25"
Top Job: no
Rtns to Sfc: 120 cft
TTOC: Surface
- - -

Prod. Csg. Cmt Vol.: 3420 cft
Hole Size: 8.75"
Top Job: no
Rtns to Sfc: 130 cft
TTOC: Surface
- - -

Liner Cmt Vol.:
Hole Size:
Top Job:
Rtns to Sfc:
TTOC:
- - -
Top of Formation:
UBA: 6878'
BLW: 7368'

Volume Behind Pipe:
1.3 Yield Assumed
Theoretical Calculations (TTOC)

Event: WELL MAINT - RIGLESS
Event End: 2/25/2009 00:00
Sec. Reason:
End Status: FINISHED - SUCCESS
Well Classification: EXPLORATION

OCCIDENTAL OF ELK HILLS INC

335-35S

Ground Level: 782.0ft
Datum: ORIGINAL KB @ 796.00ft (default)
API No.: 0402958896

Wellbore: ST 1
PBMD: 7,438.0ft
Btm TMD: 7,478.0ft
Spud Date: 2/9/1979 00:00
BH Coord X: 6,152,432.62uss ft
BH Coord Y: 2,288,791.30uss ft

Casing Shoes (ft)	Schematic (3/1/2009)	Openings Top/Btm/Type/Status

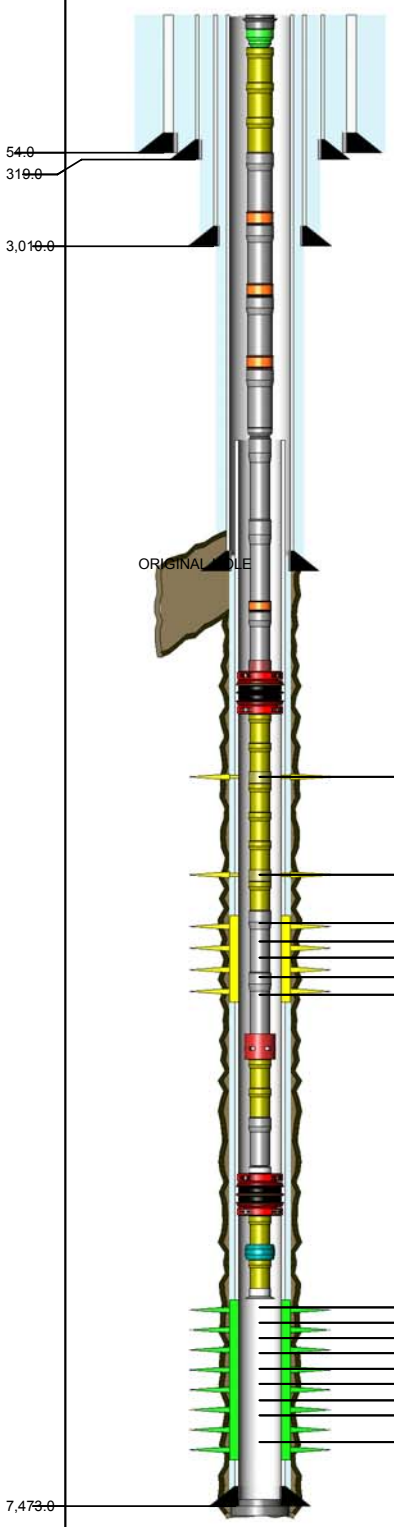

6,703.0ft, 6,706.0ft, PERFORATED, ISOLATE
6,740.0ft, 6,746.0ft, PERFORATED, ISOLATE
6,786.0ft, 6,798.0ft, PERFORATED, ISOLATE
6,810.0ft, 6,814.0ft, PERFORATED, ISOLATE
6,818.0ft, 6,858.0ft, PERFORATED, ISOLATE
6,869.0ft, 6,883.0ft, PERFORATED, ISOLATE
6,888.0ft, 6,898.0ft, PERFORATED, ISOLATE
7,150.0ft, 7,177.0ft, PERFORATED, OPEN
7,184.0ft, 7,210.0ft, PERFORATED, OPEN
7,215.0ft, 7,255.0ft, PERFORATED, OPEN
7,255.0ft, 7,260.0ft, PERFORATED, OPEN
7,268.0ft, 7,305.0ft, PERFORATED, OPEN
7,305.0ft, 7,310.0ft, PERFORATED, OPEN
7,320.0ft, 7,355.0ft, PERFORATED, OPEN
7,355.0ft, 7,360.0ft, PERFORATED, OPEN
7,368.0ft, 7,390.0ft, PERFORATED, OPEN

TUBING STRING — Report Date: 8/24/2002 00:00

Component	Top MD (ft)	Btm MD (ft)
TH-SGL	14.0	14.6
FATNIP	14.6	15.9
PUPJNT	15.9	20.0
PUPJNT	20.0	26.0
PUPJNT	26.0	36.0
TBGJNT	36.0	2,291.5
GLM-V	2,291.5	2,300.4
TBGJNT	2,300.4	4,209.8
GLM-V	4,209.8	4,218.2
TBGJNT	4,218.2	5,598.1
GLM-V	5,598.1	5,607.0
TBGJNT	5,607.0	5,856.9
XO	5,856.9	5,858.0
TBGJNT	5,858.0	6,637.3
GLM-V	6,637.3	6,644.0
TBGJNT	6,644.0	6,675.4
ON-OFF	6,675.4	6,676.6
PKR-S	6,676.6	6,681.8
PUPJNT	6,681.8	6,691.9
PUPJNT	6,691.9	6,699.9
BJ	6,699.9	6,709.8
PUPJNT	6,709.8	6,719.9
PUPJNT	6,719.9	6,729.9
PUPJNT	6,729.9	6,733.9
BJ	6,733.9	6,753.8
PUPJNT	6,753.8	6,763.8
TBGJNT	6,763.8	6,951.1
SS-C	6,951.1	6,955.1
PUPJNT	6,955.1	6,965.0
PUPJNT	6,965.0	6,975.0
TBGJNT	6,975.0	7,099.6
LOCSUB	7,099.6	7,100.6
PKR-S	7,100.6	7,106.7
PUPJNT	7,106.7	7,112.8
PNIP-O	7,112.8	7,114.2
PUPJNT	7,114.2	7,120.3
BELCOL	7,120.3	7,120.8

PLUG BACK — Report Date: 7/19/2002 00:00

Component	Top MD (ft)	Btm MD (ft)
CEMENT	7,438.0	7,473.0

PLUG BACK — Report Date: 7/5/2002 00:00

Component	Top MD (ft)	Btm MD (ft)
CEMENT	7,473.0	7,478.0

CONDUCTOR CASING — Report Date: 2/9/1979 00:00

Item	OD (in)	Grade	Wt. (ppf)	TopMD (ft)	BtmMD (ft)
CASING JOINT(S)	20.000			14.0	54.0

SURFACE CASING — Report Date: 3/21/1979 00:00

Item	OD (in)	Grade	Wt. (ppf)	TopMD (ft)	BtmMD (ft)
CASING JOINT(S)	13.375	H-40	48.00	14.0	319.0

INTERMEDIATE CASING — Report Date: 3/25/1979 00:00

Item	OD (in)	Grade	Wt. (ppf)	TopMD (ft)	BtmMD (ft)
CASING JOINT(S)	9.625	K-55	40.00	14.0	3,010.0

PRODUCTION CASING — Report Date: 4/28/1979 00:00

Item	OD (in)	Grade	Wt. (ppf)	TopMD (ft)	BtmMD (ft)
CASING JOINT(S)	7.000	N-80	26.00	14.0	78.4
CASING JOINT(S)	7.000	K-55	23.00	78.4	5,083.2
CASING JOINT(S)	7.000	K-55	26.00	5,083.2	7,630.9
CASING JOINT(S)	7.000	N-80	26.00	7,630.9	8,130.0

LINER — Report Date: 7/5/2002 00:00

Item	OD (in)	Grade	Wt. (ppf)	TopMD (ft)	BtmMD (ft)
SEALBORE EXTENSION	5.250			5,907.3	5,918.6
LINER HANGER PACKER	6.276			5,918.6	5,925.4
LINER TIEBACK SEAL ASSEMBLY	4.496			5,925.4	5,928.3
LINER HANGER	6.276			5,928.3	5,934.4
CASING JOINT(S)	5.000	N-80	15.00	5,934.4	7,389.9
LANDING COLLAR	5.000	N-80		7,389.9	7,389.9
CASING JOINT(S)	5.000	N-80	15.00	7,389.9	7,430.6
FLOAT COLLAR	5.000	N-80		7,430.6	7,430.6
CASING JOINT(S)	5.000	N-80	15.00	7,430.6	7,471.2
FLOAT SHOE	5.000	N-80		7,471.2	7,473.0

Well: 335-35S-RD1 S/T/R: 35S/30S/24E

CASING CEMENT DETAIL
- - -
Sfc Csg. Cmt Vol.: 370 cf
Hole Size: 17.5"
Top Job: no
Rtns to Sfc: 20 cf
TOC: sfc
- - -

Interm Csg. Cmt Vol.: 1530 cf
Hole Size: 12.25"
Top Job: no
Rtns to Sfc: 120 cf
TOC: sfc
- - -

Prod. Csg. Cmt Vol.: 3420 cf
Hole Size: 8.75"
Top Job: no
Rtns to Sfc: 130 cf
TOC: sfc
- - -

Liner Cmt Vol.: 161 cf
Hole Size: 6.125"
Top Job: no
Rtns to Sfc: yes
TOC: TOL
- - -
Top of Formation:
UBA: 6885'
BLW: 7396'

Volume Behind Pipe:
1.3 Yield Assumed
Theoretical Calculations (TTOC)

OCCIDENTAL OF ELK HILLS INC

335-3G

Event: WELL MAINT - RIGLESS
Event End:
Sec. Reason:
End Status:
Well Classification: INJECTION

Ground Level: 880.0ft
Datum: ORIGINAL KB @ 894.00ft (default)
API No.: 0402958312

Wellbore: ORIGINAL HOLE
PBMD: 8,207.0ft
Btm TMD: 8,300.0ft
Spud Date: 10/26/1978 00:00
BH Coord X: 6,146,793.83uss ft
BH Coord Y: 2,283,841.96uss ft

Casing Shoes (ft)

Schematic (11/1/2008)

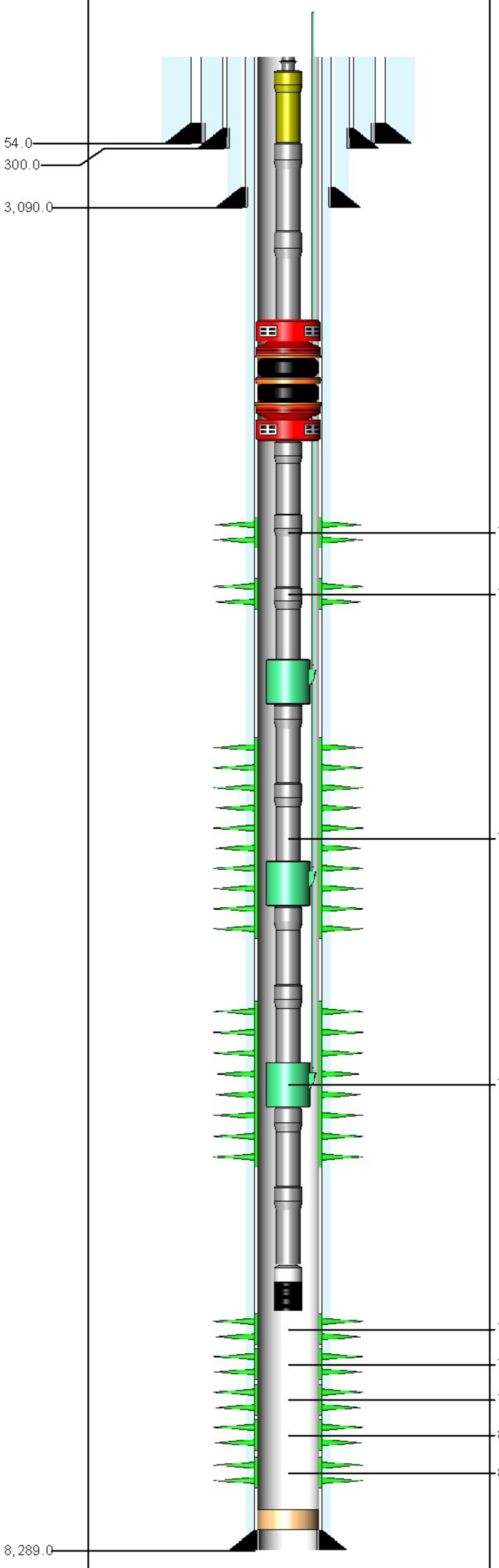

Openings Top/Btm/Type/Status

7,497.0ft, 7,528.0ft, PERFORATED, OPE
7,552.0ft, 7,588.0ft, PERFORATED, OPE
7,613.0ft, 7,685.0ft, PERFORATED, OPE
7,710.0ft, 7,768.0ft, PERFORATED, OPE
7,835.0ft, 7,892.0ft, PERFORATED, OPE
7,918.0ft, 7,945.0ft, PERFORATED, OPE
7,970.0ft, 7,990.0ft, PERFORATED, OPE
8,010.0ft, 8,040.0ft, PERFORATED, OPE
8,065.0ft, 8,098.0ft, PERFORATED, OPE

TUBING STRING Report Date: 8/22/1991 00:00

Component	Top MD (ft)	Btm MD (ft)
TH-SGL	14.0	14.6
PUPJNT	14.6	18.9
TBGJNT	18.9	7,405.3
PKR-S	7,405.3	7,409.3
TBGJNT	7,409.3	7,590.5
INJM-V	7,590.5	7,599.6
TBGJNT	7,599.6	7,662.7
INJM-V	7,662.7	7,671.7
TBGJNT	7,671.7	7,734.6
INJM-V	7,734.6	7,743.6
TBGJNT	7,743.6	7,807.2
LOCSUB	7,807.2	7,808.2
SA	7,808.2	7,814.2

PLUG BACK Report Date: 5/21/2003 00:00

Component	Top MD (ft)	Btm MD (ft)
FILL	8,140.0	8,207.0

CONDUCTOR CASING Report Date: 10/26/1978 00:00

Item	OD (in)	Grade	Wt. (ppf)	TopMD (ft)	BtmMD (ft)
CASING JOINT(S)	20.000			14.0	54.0

SURFACE CASING Report Date: 12/10/1978 00:00

Item	OD (in)	Grade	Wt. (ppf)	TopMD (ft)	BtmMD (ft)
CASING JOINT(S)	13.375	H-40	48.00	14.0	300.0

INTERMEDIATE CASING Report Date: 12/14/1978 00:00

Item	OD (in)	Grade	Wt. (ppf)	TopMD (ft)	BtmMD (ft)
CASING JOINT(S)	9.625	N-80	40.00	14.0	3,090.0

PRODUCTION CASING Report Date: 1/9/1979 00:00

Item	OD (in)	Grade	Wt. (ppf)	TopMD (ft)	BtmMD (ft)
CASING JOINT(S)	7.000	K-55	26.00	14.0	78.5
CASING JOINT(S)	7.000	K-55	23.00	78.5	5,028.2
CASING JOINT(S)	7.000	K-55	26.00	5,028.2	6,648.1
FLAG JOINT	7.000	K-55	26.00	6,648.1	6,667.6
CASING JOINT(S)	7.000	K-55	26.00	6,667.6	8,245.0
FLOAT COLLAR	7.000	K-55		8,245.0	8,246.0
CASING JOINT(S)	7.000	K-55	26.00	8,246.0	8,287.0
FLOAT SHOE	7.000	K-55		8,287.0	8,289.0

Well: 335-3G S/T/R: 3G/31S/24E

CASING CEMENT DETAIL
- - -
Sfc Csg. Cmt Vol.: 450 cf
Hole Size: 17.5"
Top Job: No
Rtns to Sfc: 10 cf
TOC: Sfc
- - -

Interm Csg. Cmt Vol.: 1555 cf
Hole Size: 12.25"
Top Job: No
Rtns to Sfc: 200 cf
TOC: Sfc
- - -

Prod. Csg. Cmt Vol.: 2500 cf
Hole Size: 8.75"
Top Job: No
Rtns to Sfc:
TTOC: Sfc
- - -

Liner Cmt Vol.:
Hole Size:
Top Job:
Rtns to Sfc:
TOC:
- - -
Top of Formation:
UBA: 7461'
BLW: 8115'

Volume Behind Pipe:
1.3 Yield Assumed
Theoretical Calculations (TTOC)

Event: WELL MAINT - RIGLESS
Event End: 1/22/2009 00:00
Sec. Reason:
End Status: FINISHED - SUCCESS
Well Classification: INJECTION

OCCIDENTAL OF ELK HILLS INC

336-35S

Ground Level: 783.0ft
Datum: ORIGINAL KB @ 793.00ft (default)
API No.: 0402927776

Wellbore: ORIGINAL HOLE
PBMD: 6,200.0ft
Btm TMD: 7,500.0ft
Spud Date: 2/20/1952 00:00
BH Coord X: 6,152,638.42uss ft
BH Coord Y: 2,288,410.20uss ft

Casing Shoes (ft)	Schematic (2/1/2009)	Openings Top/Btm/Type/Status

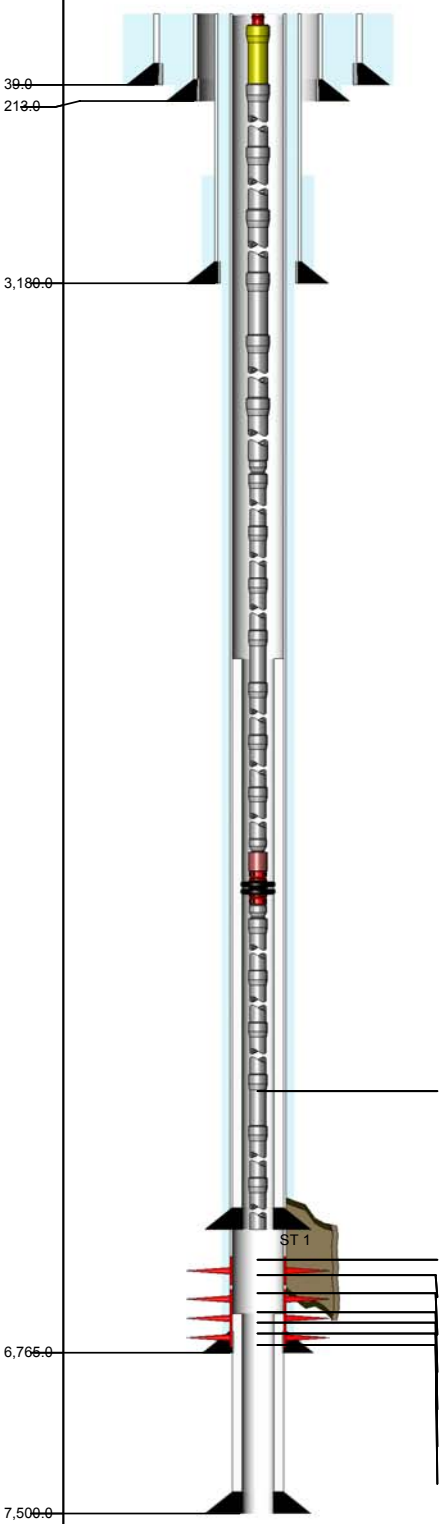

6,160.0ft, 6,161.0ft, WSO PERFS, SQUEEZE
6,325.0ft, 6,355.0ft, PERFORATED, ABANDO
6,365.0ft, 6,455.0ft, PERFORATED, ABANDO
6,475.0ft, 6,510.0ft, PERFORATED, ABANDO
6,560.0ft, 6,600.0ft, PERFORATED, ABANDO
6,615.0ft, 6,640.0ft, PERFORATED, ABANDO
6,650.0ft, 6,705.0ft, PERFORATED, ABANDO
6,720.0ft, 6,740.0ft, PERFORATED, ABANDO

TUBING STRING Report Date: 8/29/2008 00:00

Component	Top MD (ft)	Btm MD (ft)
TH-DBB	10.0	10.8
PUPJNT	10.8	14.8
CAS	14.8	5,979.7
XO	5,979.7	5,980.4
CAS	5,980.4	6,102.2
XO	6,102.2	6,102.9
ON-OFF	6,102.9	6,104.3
PKR-S	6,104.3	6,110.0
XO	6,110.0	6,110.9
CAS	6,110.9	6,476.2
XO	6,476.2	6,476.8
INJM-V	6,476.8	6,483.4
XO	6,483.4	6,483.7
CAS	6,483.7	7,062.5
SA	7,062.5	7,062.5
PKR-S	7,062.5	7,064.7
MOEXT	7,064.7	7,072.9
XO	7,072.9	7,073.5
CAS	7,073.5	7,105.0
PRONIP	7,105.0	7,106.2
PUPJNT	7,106.2	7,108.2
WLREG	7,108.2	7,108.7

CONDUCTOR CASING Report Date: 2/20/1952 00:00

Item	OD (in)	Grade	Wt. (ppf)	TopMD (ft)	BtmMD (ft)
CASING JOINT(S)	26.000			10.0	39.0

SURFACE CASING Report Date: 6/3/1952 00:00

Item	OD (in)	Grade	Wt. (ppf)	TopMD (ft)	BtmMD (ft)
CASING JOINT(S)	16.000	H-40	65.00	10.0	213.0

INTERMEDIATE CASING Report Date: 6/8/1952 00:00

Item	OD (in)	Grade	Wt. (ppf)	TopMD (ft)	BtmMD (ft)
CASING JOINT(S)	10.750	J-55	45.50	10.0	71.0
CASING JOINT(S)	10.750	J-55	40.50	71.0	2,366.0
CASING JOINT(S)	10.750	J-55	45.50	2,366.0	3,180.0

PRODUCTION CASING Report Date: 6/27/1952 00:00

Item	OD (in)	Grade	Wt. (ppf)	TopMD (ft)	BtmMD (ft)
CASING JOINT(S)	7.000	N-80	23.00	10.0	6,200.0
CASING JOINT(S)	7.000		23.00	6,200.0	6,250.0
CASING JOINT(S)	7.000	N-80	23.00	6,250.0	6,765.0

LINER Report Date: 4/28/1987 00:00

Item	OD (in)	Grade	Wt. (ppf)	TopMD (ft)	BtmMD (ft)
LINER HANGER	6.366	K-55	11.60	6,585.8	6,590.3
CASING JOINT(S)	4.500	K-55	11.60	6,590.3	7,456.3
FLOAT COLLAR	4.500	K-55	11.60	7,456.3	7,457.4
CASING JOINT(S)	4.500	K-55	11.60	7,457.4	7,498.0
FLOAT SHOE	4.500	K-55	11.60	7,498.0	7,500.0

LINER Report Date: 5/27/1987 00:00

Item	OD (in)	Grade	Wt. (ppf)	TopMD (ft)	BtmMD (ft)
LINER HANGER	6.366	K-55	11.60	6,053.0	6,056.2
CASING JOINT(S)	4.500	K-55	11.60	6,056.2	7,453.3
FLOAT COLLAR	4.500	K-55	11.60	7,453.3	7,455.2
CASING JOINT(S)	4.500	K-55	11.60	7,455.2	7,498.0
FLOAT SHOE	4.500	K-55	11.60	7,498.0	7,500.0

Well: 336-35S S/T/R: 35S/30S/24E

CASING CEMENT DETAIL
- - -
Sfc Csg. Cmt Vol.: 500 sxs
Hole Size: 22"
Top Job: no
Rtns to Sfc: not reported
TTOC: sfc
- - -

Interm Csg. Cmt Vol.: 600 sxs
Hole Size: 15"
Top Job: no
Rtns to Sfc: no
TOC: 1470' per thermometric survey
- - -

Prod. Csg. Cmt Vol.: 500sxs
Hole Size: 9.75"
Top Job: no
Rtns to Sfc: no
TTOC: 4900'
- - -

Liner Cmt Vol.: 180 cf
Hole Size: 6.125"
Top Job: no
Rtns to Sfc: no
TTOC: TOL
- - -
Top of Formation:
UBA: 6858'
BLW: 7324'

Volume Behind Pipe:
1.3 Yield Assumed
Theoretical Calculations (TTOC)

Event: WELL MAINT - RIGLESS
Event End: 1/22/2009 00:00
Sec. Reason:
End Status: FINISHED - SUCCESS
Well Classification: INJECTION

OCCIDENTAL OF ELK HILLS INC

336-35S

Ground Level: 783.0ft
Datum: ORIGINAL KB @ 793.00ft (default)
API No.: 0402927776

Wellbore: ST 1
PBMD: 7,412.0ft
Btm TMD: 7,500.0ft
Spud Date: 2/20/1952 00:00
BH Coord X: 6,152,638.42uss ft
BH Coord Y: 2,288,410.20uss ft

Casing Shoes (ft)	Schematic (2/1/2009)	Openings Top/Btm/Type/Status

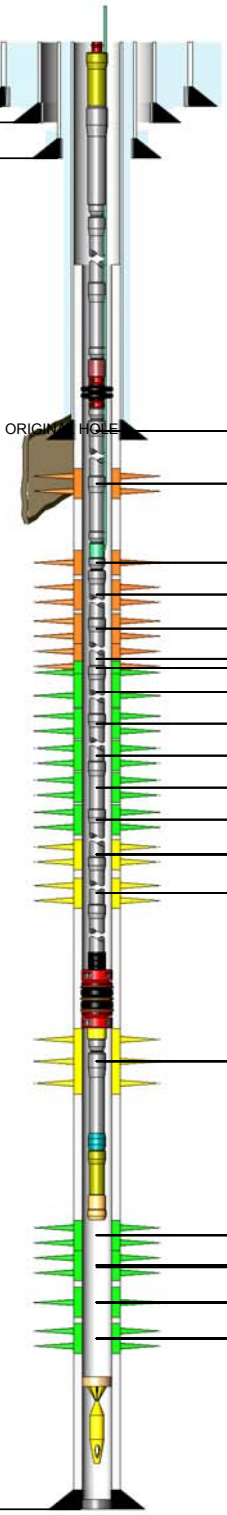

39.0
213.0
3,180.0
ORIGINAL HOLE
7,500.0

6,160.0ft, 6,161.0ft, WSO PERFS, SQUEEZE
6,330.0ft, 6,450.0ft, PERFORATED, SQUEEZ
6,480.0ft, 6,518.0ft, PERFORATED, SQUEEZ
6,552.0ft, 6,602.0ft, PERFORATED, SQUEEZ
6,627.0ft, 6,666.0ft, PERFORATED, SQUEEZ
6,667.0ft, 6,695.0ft, PERFORATED, SQUEEZ
6,683.0ft, 6,701.0ft, PERFORATED, OPEN
6,712.0ft, 6,745.0ft, PERFORATED, OPEN
6,752.0ft, 6,763.0ft, PERFORATED, OPEN
6,773.0ft, 6,796.0ft, PERFORATED, OPEN
6,804.0ft, 6,830.0ft, PERFORATED, OPEN
6,838.0ft, 6,853.0ft, PERFORATED, OPEN
6,870.0ft, 6,940.0ft, REPERFORATED, SQUE
6,870.0ft, 6,940.0ft, PERFORATED, ISOLATE
6,960.0ft, 7,045.0ft, REPERFORATED, SQUE
6,960.0ft, 7,045.0ft, PERFORATED, ISOLATE
7,065.0ft, 7,090.0ft, REPERFORATED, SQUE
7,065.0ft, 7,090.0ft, PERFORATED, ISOLATE
7,110.0ft, 7,125.0ft, REPERFORATED, SQUE
7,110.0ft, 7,125.0ft, PERFORATED, OPEN
7,125.0ft, 7,182.0ft, REPERFORATED, OPEN
7,125.0ft, 7,182.0ft, PERFORATED, OPEN
7,132.0ft, 7,182.0ft, PERFORATED, OPEN
7,212.0ft, 7,238.0ft, REPERFORATED, OPEN
7,212.0ft, 7,238.0ft, REPERFORATED, OPEN
7,212.0ft, 7,238.0ft, PERFORATED, OPEN
7,258.0ft, 7,310.0ft, REPERFORATED, OPEN
7,258.0ft, 7,310.0ft, REPERFORATED, OPEN
7,258.0ft, 7,310.0ft, PERFORATED, OPEN

TUBING STRING — Report Date: 8/29/2008 00:00

Component	Top MD (ft)	Btm MD (ft)
TH-DBB	10.0	10.8
PUPJNT	10.8	14.8
CAS	14.8	5,979.7
XO	5,979.7	5,980.4
CAS	5,980.4	6,102.2
XO	6,102.2	6,102.9
ON-OFF	6,102.9	6,104.3
PKR-S	6,104.3	6,110.0
XO	6,110.0	6,110.9
CAS	6,110.9	6,476.2
XO	6,476.2	6,476.8
INJM-V	6,476.8	6,483.4
XO	6,483.4	6,483.7
CAS	6,483.7	7,062.5
SA	7,062.5	7,062.5
PKR-S	7,062.5	7,064.7
MOEXT	7,064.7	7,072.9
XO	7,072.9	7,073.5
CAS	7,073.5	7,105.0
PRONIP	7,105.0	7,106.2
PUPJNT	7,106.2	7,108.2
WLREG	7,108.2	7,108.7

PLUG BACK — Report Date: 1/23/2004 00:00

Component	Top MD (ft)	Btm MD (ft)
FILL	7,336.0	7,412.0

PLUG BACK — Report Date: 7/14/1996 00:00

Component	Top MD (ft)	Btm MD (ft)
JUNK	7,412.0	7,414.0

PLUG BACK — Report Date: 8/5/1987 00:00

Component	Top MD (ft)	Btm MD (ft)
CEMENT	7,453.0	7,500.0

CONDUCTOR CASING — Report Date: 2/20/1952 00:00

Item	OD (in)	Grade	Wt. (ppf)	TopMD (ft)	BtmMD (ft)
CASING JOINT(S)	26.000			10.0	39.0

SURFACE CASING — Report Date: 6/3/1952 00:00

Item	OD (in)	Grade	Wt. (ppf)	TopMD (ft)	BtmMD (ft)
CASING JOINT(S)	16.000	H-40	65.00	10.0	213.0

INTERMEDIATE CASING — Report Date: 6/8/1952 00:00

Item	OD (in)	Grade	Wt. (ppf)	TopMD (ft)	BtmMD (ft)
CASING JOINT(S)	10.750	J-55	45.50	10.0	71.0
CASING JOINT(S)	10.750	J-55	40.50	71.0	2,366.0
CASING JOINT(S)	10.750	J-55	45.50	2,366.0	3,180.0

PRODUCTION CASING — Report Date: 6/27/1952 00:00

Item	OD (in)	Grade	Wt. (ppf)	TopMD (ft)	BtmMD (ft)
CASING JOINT(S)	7.000	N-80	23.00	10.0	6,200.0
CASING JOINT(S)	7.000		23.00	6,200.0	6,250.0
CASING JOINT(S)	7.000	N-80	23.00	6,250.0	6,765.0

LINER — Report Date: 5/27/1987 00:00

Item	OD (in)	Grade	Wt. (ppf)	TopMD (ft)	BtmMD (ft)
LINER HANGER	6.366	K-55	11.60	6,053.0	6,056.2
CASING JOINT(S)	4.500	K-55	11.60	6,056.2	7,453.3
FLOAT COLLAR	4.500	K-55	11.60	7,453.3	7,455.2
CASING JOINT(S)	4.500	K-55	11.60	7,455.2	7,498.0
FLOAT SHOE	4.500	K-55	11.60	7,498.0	7,500.0

Well: 336-35S-RD1 S/T/R: 35S/30S/24E

CASING CEMENT DETAIL
- - -
Sfc Csg. Cmt Vol.: 500 sxs
Hole Size: 22"
Top Job: no
Rtns to Sfc: not reported
TTOC: sfc
- - -

Interm Csg. Cmt Vol.: 600 sxs
Hole Size: 15"
Top Job: no
Rtns to Sfc: no
TOC: 1470' per thermometric survey
- - -

Prod. Csg. Cmt Vol.: 500sxs
Hole Size: 9.75"
Top Job: no
Rtns to Sfc: no
TTOC: 4900'
- - -

Liner Cmt Vol.: 165 cf
Hole Size: 6.125"
Top Job: no
Rtns to Sfc: no
TTOC: 6186' per CBL
- - -
Top of Formation:
UBA: 6855'
BLW: 7325'

Volume Behind Pipe:
1.3 Yield Assumed
Theoretical Calculations (TTOC)

OCCIDENTAL OF ELK HILLS INC

336X-34S

Event: WELL MAINT - RIG
Event End: 7/14/2007 00:00
Sec. Reason: PIN PART

Ground Elev: 946.0ft
KB to Ground: 20.0ft
Datum: ORIGINAL KB @ 966.00ft (default)
API No.: 0402967403

Wellbore: ORIGINAL HOLE
Top TMD: 20.0ft
PBMD: 6,680.0ft
Btm TMD: 7,600.0ft
Spud Date: 9/1/1982 00:00
BH Coord X: 6,147,375.56uss ft BH Coord Y: 2,288,630.98uss ft

Casing Shoes (ft)	Schematic (8/1/2007)	Openings Top/Btm/Type/Status

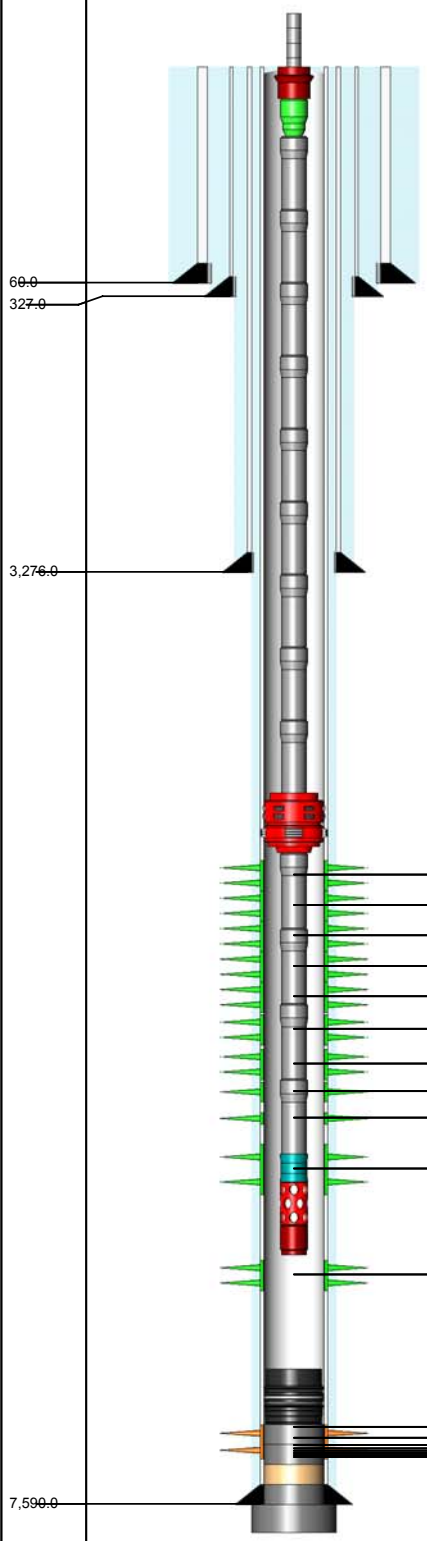

6,341.0ft, 6,351.0ft, PERFORATED, OPEN
6,351.0ft, 6,371.0ft, PERFORATED, OPEN
6,371.0ft, 6,391.0ft, PERFORATED, OPEN
6,395.0ft, 6,415.0ft, PERFORATED, OPEN
6,415.0ft, 6,419.0ft, PERFORATED, OPEN
6,461.0ft, 6,477.0ft, PERFORATED, OPEN
6,547.0ft, 6,555.0ft, PERFORATED, OPEN
6,591.0ft, 6,602.0ft, PERFORATED, OPEN
6,611.0ft, 6,621.0ft, PERFORATED, OPEN
6,633.0ft, 6,641.0ft, PERFORATED, OPEN
6,647.0ft, 6,657.0ft, PERFORATED, OPEN
6,694.0ft, 6,740.0ft, PERFORATED, SQUEEZED
6,770.0ft, 6,830.0ft, PERFORATED, SQUEEZED
6,853.0ft, 6,935.0ft, PERFORATED, SQUEEZED
6,960.0ft, 7,035.0ft, PERFORATED, SQUEEZED
7,063.0ft, 7,083.0ft, PERFORATED, SQUEEZED
7,108.0ft, 7,175.0ft, PERFORATED, SQUEEZED
7,200.0ft, 7,220.0ft, PERFORATED, SQUEEZED
7,245.0ft, 7,300.0ft, PERFORATED, SQUEEZED

ROD STRING Report Date: 7/14/2007 00:00

Component	Top MD (ft)	Btm MD (ft)
POLROD	0.0	30.0
PNYROD	30.0	54.0
R-4PER	54.0	2,334.0
ROD	2,334.0	2,454.0
ROD	2,454.0	3,834.0
R-4PER	3,834.0	3,954.0
R-6PER	3,954.0	6,594.0
RSTBAR	6,594.0	6,598.0
INSPMP	6,598.0	6,622.0

TUBING STRING Report Date: 2/5/2007 00:00

Component	Top MD (ft)	Btm MD (ft)
TH-DBB	20.0	20.6
FATNIP	20.6	21.3
TBGJNT	21.3	6,131.0
AC	6,131.0	6,133.4
TBGJNT	6,133.4	6,638.7
STNIP	6,638.7	6,639.8
PERFJT	6,639.8	6,643.9
STCOLL	6,643.9	6,644.3

PLUG BACK Report Date: 3/10/2004 00:00

Component	Top MD (ft)	Btm MD (ft)
CR-PRM	6,688.0	6,690.0

PLUG BACK Report Date: 3/10/2004 00:00

Component	Top MD (ft)	Btm MD (ft)
CEMENT	6,690.0	6,844.0

PLUG BACK Report Date: 1/24/1990 00:00

Component	Top MD (ft)	Btm MD (ft)
CEMENT	6,844.0	7,485.0

PLUG BACK Report Date: 11/13/1987 00:00

Component	Top MD (ft)	Btm MD (ft)
FILL	7,485.0	7,536.0

PLUG BACK Report Date: 12/15/1982 00:00

Component	Top MD (ft)	Btm MD (ft)
PLUGBK	7,536.0	7,590.0

PLUG BACK Report Date: 12/15/1982 00:00

Component	Top MD (ft)	Btm MD (ft)
CEMENT	7,590.0	7,600.0

CONDUCTOR CASING Report Date: 9/25/1982 00:00

Item Description	Btm MD(ft)
CASING JOINT(S) 20 in,	60.0

SURFACE CASING Report Date: 9/29/1982 00:00

Item Description	Btm MD (ft)
CASING JOINT(S) 13.375 in, , H-40, 48	327.0

INTERMEDIATE CASING Report Date: 10/3/1982 00:00

Item Description	Btm MD (ft)
CASING JOINT(S) 9.625 in, , K-55, 40	3,276.0

PRODUCTION CASING Report Date: 10/21/1982 00:00

Item Description	Btm MD (ft)
CASING JOINT(S) 7 in, , K-55, 26	81.0
CASING JOINT(S) 7 in, , K-55, 23	5,001.0
CASING JOINT(S) 7 in, , K-55, 26	7,590.0

Well: 336X-30S S/T/R: 30S/30S/24E

CASING CEMENT DETAIL
- - -
Sfc Csg. Cmt Vol.: 415 cf
Hole Size: 17.5"
Top Job:no
Rtns to Sfc: 60 cf
TOC: Sfc
- - -

Interm Csg. Cmt Vol.: 1641 cf
Hole Size: 12.25"
Top Job: no
Rtns to Sfc: 90 cf
TOC: sfc
- - -

Prod. Csg. Cmt Vol.: 1690 cf
Hole Size: 8.75"
Top Job: mo
Rtns to Sfc: No
TTOC: Sfc
- - -

Liner Cmt Vol.:
Hole Size:
Top Job:
Rtns to Sfc:
TTOC:
- - -

Top of Formation:
UBA 6851'
BLW 7304'

Volume Behind Pipe
1.15 Yield Assumed on
Theoretical Calculations (T)

OCCIDENTAL OF ELK HILLS INC

337-34S

Event: WELL MAINT - RIGLESS
Event End: 1/14/2006 00:00
Sec. Reason:

Ground Level: 989.0ft
Datum: ORIGINAL KB @ 998.00ft (default)
API No.: 0402927661

Wellbore: ORIGINAL HOLE
PBMD: 6,554.0ft
Btm TMD: 6,915.0ft
Spud Date: 9/20/1945 00:00
BH Coord X: 6,147,104.93uss ft
BH Coord Y: 2,287,886.39uss ft

Casing Shoes (ft) | Schematic (2/1/2006) | Openings Top/Btm/Type/Status

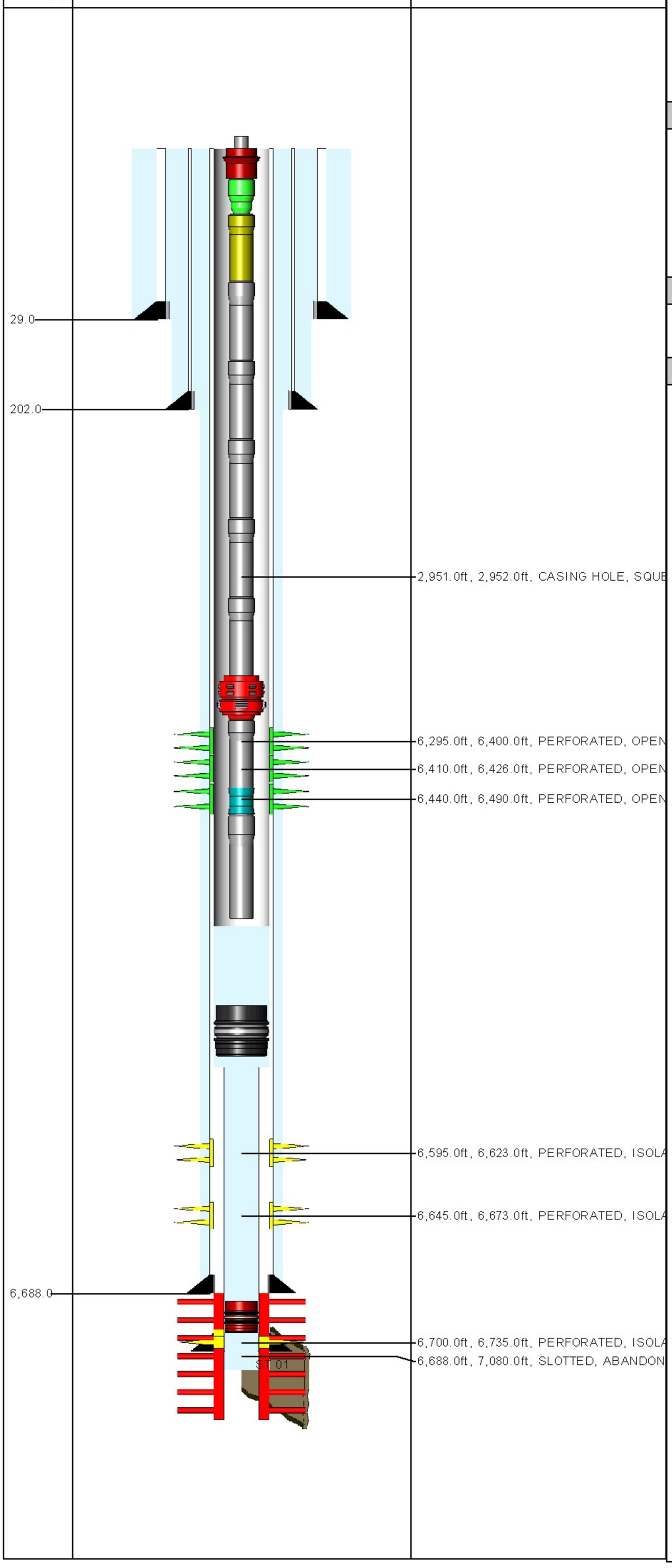

ROD STRING Report Date: 6/8/2003 00:00

Component	Top MD (ft)	Btm MD (ft)
POLROD		
PNYROD	41.0	45.0
ROD	45.0	2,295.0
ROD	2,295.0	6,495.0
INSPMP	6,495.0	

TUBING STRING Report Date: 6/8/2003 00:00

Component	Top MD (ft)	Btm MD (ft)
TH-DBB	9.0	9.7
FATNIP	9.7	11.1
PUPJNT	11.1	21.1
TBGJNT	21.1	6,045.5
AC	6,045.5	6,047.9
TBGJNT	6,047.9	6,486.6
STNIP	6,486.6	6,487.2
TBGJNT	6,487.2	6,518.9

PLUG BACK Report Date: 6/6/2003 00:00

Component	Top MD (ft)	Btm MD (ft)
CR-PRM	6,554.0	6,556.0

PLUG BACK Report Date: 5/29/2003 00:00

Component	Top MD (ft)	Btm MD (ft)
BRP	6,690.0	6,691.5

CONDUCTOR CASING Report Date: 9/20/1945 00:00

Item	OD (in)	Grade	Wt. (ppf)	TopMD (ft)	BtmMD (ft)
CASING JOINT(S)	18.625			9.0	29.0

SURFACE CASING Report Date: 9/23/1945 00:00

Item	OD (in)	Grade	Wt. (ppf)	TopMD (ft)	BtmMD (ft)
CASING JOINT(S)	11.750	J-55	47.00	9.0	202.0

INTERMEDIATE CASING Report Date: 1/29/1946 00:00

Item	OD (in)	Grade	Wt. (ppf)	TopMD (ft)	BtmMD (ft)
CASING JOINT(S)	7.000	N-80	29.70	9.0	4,441.9
CASING JOINT(S)	7.000	J-55	26.00	4,441.9	5,904.1
CASING JOINT(S)	7.000	N-80	29.70	5,904.1	6,688.0

LINER Report Date: 3/5/1946 00:00

Item	OD (in)	Grade	Wt. (ppf)	TopMD (ft)	BtmMD (ft)
LINER HANGER	6.154		15.00	6,566.0	6,571.0
CASING JOINT(S)	4.500		15.00	6,571.0	6,787.5
SLOTTED LINER	4.500		15.00	6,787.5	7,060.6
BULL PLUG	4.500		15.00	7,060.6	7,061.0

Well: 337-34S S/T/R: 34S/30S/24E

CASING CEMENT DETAIL
- - -
Sfc Csg. Cmt Vol.: 200 sx
Hole Size: 16"
Top Job: No
Rtns to Sfc:
TTOC: Sfc
- - -

Interm Csg. Cmt Vol.: 800 sx
Hole Size: 10.625"
Top Job: No
Rtns to Sfc:
TTOC: Sfc
- - -

Prod. Csg. Cmt Vol.:
Hole Size:
Top Job:
Rtns to Sfc:
TOC:

Liner Cmt Vol.:
Hole Size:
Top Job:
Rtns to Sfc:
TTOC:
- - -
Top of Formation:
UBA: 6813'
BLW: N/A

Volume Behind Pipe:
1.3 Yield Assumed
Theoretical Calculations (TTOC)

OCCIDENTAL OF ELK HILLS INC

337-34S

Event: WELL MAINT - RIGLESS
Event End: 1/14/2006 00:00
Sec. Reason:

Ground Level: 989.0ft
Datum: ORIGINAL KB @ 998.00ft (default)
API No.: 0402927661

Wellbore: ST 01
PBMD: 6,554.0ft
Btm TMD: 7,080.0ft
Spud Date: 9/20/1945 00:00
BH Coord X: 6,147,105.03uss ft
BH Coord Y: 2,287,892.14uss ft

Casing Shoes (ft) | Schematic (2/1/2006) | Openings Top/Btm/Type/Status

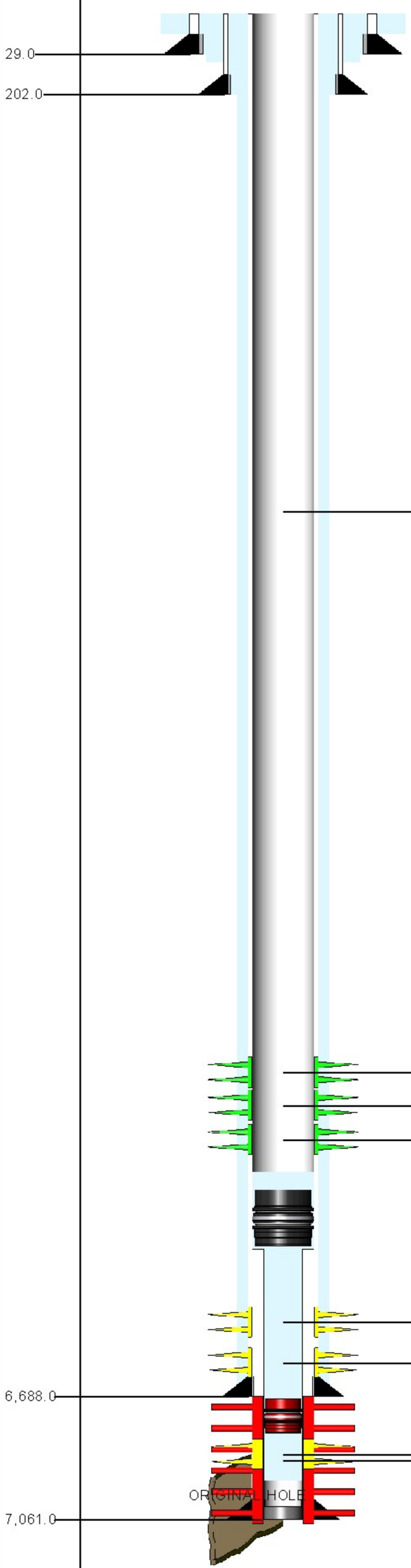

2,951.0ft, 2,952.0ft, CASING HOLE, SQUE
6,295.0ft, 6,400.0ft, PERFORATED, OPEN
6,410.0ft, 6,426.0ft, PERFORATED, OPEN
6,440.0ft, 6,490.0ft, PERFORATED, OPEN
6,595.0ft, 6,623.0ft, PERFORATED, ISOLA
6,645.0ft, 6,673.0ft, PERFORATED, ISOLA
6,700.0ft, 6,735.0ft, PERFORATED, ISOLA
6,688.0ft, 7,080.0ft, SLOTTED, ABANDON

ROD STRING Report Date: 6/8/2003 00:00

Component	Top MD (ft)	Btm MD (ft)
POLROD		
PNYROD	41.0	45.0
ROD	45.0	2,295.0
ROD	2,295.0	6,495.0
INSPMP	6,495.0	

TUBING STRING Report Date: 6/8/2003 00:00

Component	Top MD (ft)	Btm MD (ft)
TH-DBB	9.0	9.7
FATNIP	9.7	11.1
PUPJNT	11.1	21.1
TBGJNT	21.1	6,045.5
AC	6,045.5	6,047.9
TBGJNT	6,047.9	6,486.6
STNIP	6,486.6	6,487.2
TBGJNT	6,487.2	6,518.9

PLUG BACK Report Date: 6/6/2003 00:00

Component	Top MD (ft)	Btm MD (ft)
CR-PRM	6,554.0	6,556.0

PLUG BACK Report Date: 5/29/2003 00:00

Component	Top MD (ft)	Btm MD (ft)
BRP	6,690.0	6,691.5

PLUG BACK Report Date: 8/19/1998 00:00

Component	Top MD (ft)	Btm MD (ft)
CEMENT	6,761.0	7,061.0

CONDUCTOR CASING Report Date: 9/20/1945 00:00

Item	OD (in)	Grade	Wt. (ppf)	TopMD (ft)	BtmMD (ft)
CASING JOINT(S)	18.625			9.0	29.0

SURFACE CASING Report Date: 9/23/1945 00:00

Item	OD (in)	Grade	Wt. (ppf)	TopMD (ft)	BtmMD (ft)
CASING JOINT(S)	11.750	J-55	47.00	9.0	202.0

INTERMEDIATE CASING Report Date: 1/29/1946 00:00

Item	OD (in)	Grade	Wt. (ppf)	TopMD (ft)	BtmMD (ft)
CASING JOINT(S)	7.000	N-80	29.70	9.0	4,441.9
CASING JOINT(S)	7.000	J-55	26.00	4,441.9	5,904.1
CASING JOINT(S)	7.000	N-80	29.70	5,904.1	6,688.0

LINER Report Date: 3/5/1946 00:00

Item	OD (in)	Grade	Wt. (ppf)	TopMD (ft)	BtmMD (ft)
LINER HANGER	6.154		15.00	6,566.0	6,571.0
CASING JOINT(S)	4.500		15.00	6,571.0	6,787.5
SLOTTED LINER	4.500		15.00	6,787.5	7,060.6
BULL PLUG	4.500		15.00	7,060.6	7,061.0

Well: 337-34S-RD1 S/T/R: 34S/30S/24E

CASING CEMENT DETAIL
- - -
Sfc Csg. Cmt Vol.: 200 sx
Hole Size: 16"
Top Job: No
Rtns to Sfc:
TTOC: Sfc
- - -

Interm Csg. Cmt Vol.: 800 sx
Hole Size: 10.625"
Top Job: No
Rtns to Sfc:
TTOC: Sfc
- - -

Prod. Csg. Cmt Vol.:
Hole Size:
Top Job:
Rtns to Sfc:
TOC:

Liner Cmt Vol.: 40 sx
Hole Size: 5.875"
Top Job: No
Rtns to Sfc: No
TTOC: TOL
- - -
Top of Formation:
UBA: 6813'
BLW: N/A

Volume Behind Pipe:
1.3 Yield Assumed
Theoretical Calculations (TTOC)

Event: WELL MAINT - RIG
Event End: 10/9/2008 00:00
Sec. Reason: LOW PRODUCTION
End Status: FINISHED - SUCCESS
Well Classification: DEVELOPMENT

OCCIDENTAL OF ELK HILLS INC

337-35S

Ground Level: 795.0ft
Datum: ORIGINAL KB @ 809.00ft (default)
API No.: 0402958872

Wellbore: ORIGINAL HOLE
PBMD: 7,486.0ft
Btm TMD: 7,844.0ft
Spud Date: 2/5/1979 00:00
BH Coord X: 6,152,327.93uss ft
BH Coord Y: 2,287,351.57uss ft

Casing Shoes (ft)	Schematic (10/9/2008)	Openings Top/Btm/Type/Status

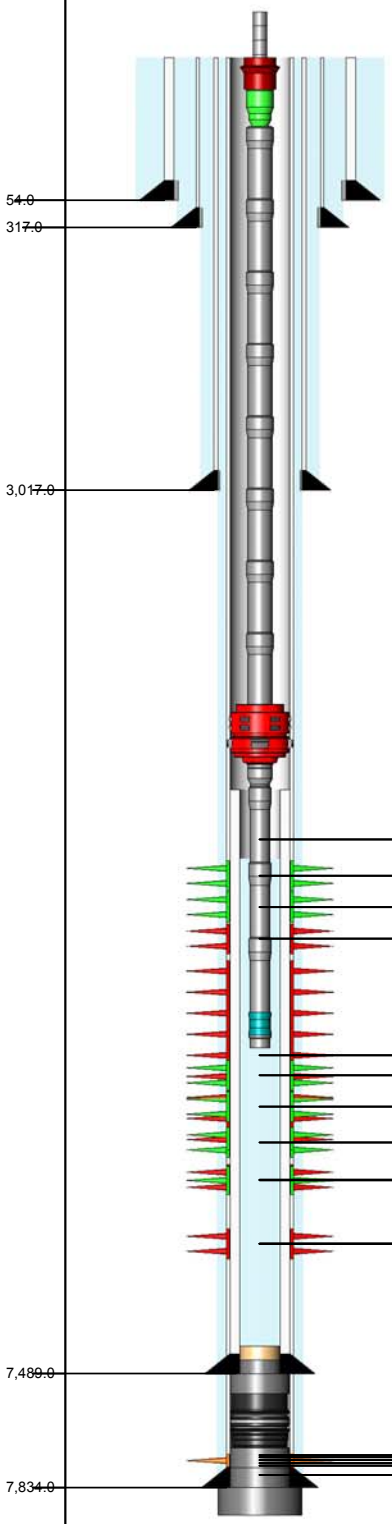

6,250.0ft, 6,251.0ft, WSO PERFS, SQUEEZE
6,720.0ft, 6,787.0ft, PERFORATED, OPEN
6,807.0ft, 6,822.0ft, PERFORATED, OPEN
6,845.0ft, 6,985.0ft, PERFORATED, ABANDO
7,010.0ft, 7,204.0ft, PERFORATED, ABANDO
7,134.0ft, 7,143.0ft, PERFORATED, OPEN
7,146.0ft, 7,157.0ft, PERFORATED, OPEN
7,170.0ft, 7,215.0ft, PERFORATED, OPEN
7,229.0ft, 7,354.0ft, PERFORATED, ABANDO
7,235.0ft, 7,354.0ft, PERFORATED, OPEN
7,385.0ft, 7,430.0ft, PERFORATED, ABANDO
7,385.0ft, 7,430.0ft, REPERFORATED, OPEN
7,595.0ft, 7,620.0ft, PERFORATED, SQUEEZ
7,630.0ft, 7,654.0ft, PERFORATED, SQUEEZ
7,665.0ft, 7,706.0ft, PERFORATED, SQUEEZ
7,725.0ft, 7,745.0ft, PERFORATED, SQUEEZ
7,755.0ft, 7,790.0ft, PERFORATED, SQUEEZ
7,815.0ft, 7,816.0ft, SQZ PERFS, SQUEEZED

ROD STRING Report Date: 10/8/2008 00:00

Component	Top MD (ft)	Btm MD (ft)
POLROD	0.0	36.0
ROD	36.0	1,926.0
ROD	1,926.0	3,816.0
ROD	3,816.0	7,026.0
RSTBAR	7,026.0	7,030.0
INSPMP	7,030.0	7,060.0

TUBING STRING Report Date: 10/7/2008 00:00

Component	Top MD (ft)	Btm MD (ft)
TH-DBB	14.0	14.6
FATNIP	14.6	15.3
TBGJNT	15.3	6,078.3
AC	6,078.3	6,080.6
TBGJNT	6,080.6	6,174.9
XO	6,174.9	6,176.0
TBGJNT	6,176.0	7,071.3
STNIP	7,071.3	7,072.4
TBGJNT	7,072.4	7,103.3

PLUG BACK Report Date: 10/10/2002 00:00

Component	Top MD (ft)	Btm MD (ft)
FILL	7,465.0	7,486.0

PLUG BACK Report Date: 7/23/1993 00:00

Component	Top MD (ft)	Btm MD (ft)
CEMENT	7,486.0	7,489.0

PLUG BACK Report Date: 7/23/1993 00:00

Component	Top MD (ft)	Btm MD (ft)
CEMENT	7,489.0	7,490.0

PLUG BACK Report Date: 9/7/1979 00:00

Component	Top MD (ft)	Btm MD (ft)
CR-PRM	7,490.0	7,492.0
CEMENT	7,492.0	7,805.0

PLUG BACK Report Date: 3/17/1979 00:00

Component	Top MD (ft)	Btm MD (ft)
CEMENT	7,805.0	7,834.0

PLUG BACK Report Date: 3/15/1979 00:00

Component	Top MD (ft)	Btm MD (ft)
CEMENT	7,834.0	7,844.0

CONDUCTOR CASING Report Date: 2/5/1979 00:00

Item	OD (in)	Grade	Wt. (ppf)	TopMD (ft)	BtmMD (ft)
CASING JOINT(S)	20.000			14.0	54.0

SURFACE CASING Report Date: 2/15/1979 00:00

Item	OD (in)	Grade	Wt. (ppf)	TopMD (ft)	BtmMD (ft)
CASING JOINT(S)	13.375	H-40	48.00	14.0	317.0

INTERMEDIATE CASING Report Date: 2/19/1979 00:00

Item	OD (in)	Grade	Wt. (ppf)	TopMD (ft)	BtmMD (ft)
CASING JOINT(S)	9.625	K-55	40.00	14.0	3,017.0

PRODUCTION CASING Report Date: 3/15/1979 00:00

Item	OD (in)	Grade	Wt. (ppf)	TopMD (ft)	BtmMD (ft)
CASING JOINT(S)	7.000	N-80	26.00	14.0	80.6
CASING JOINT(S)	7.000	K-55	23.00	80.6	4,033.6
CASING JOINT(S)	7.000	K-55	26.00	4,033.6	5,962.3
FLAG JOINT	7.000	K-55	26.00	5,962.3	5,984.5
FLAG JOINT	7.000	K-55	26.00	5,984.5	5,997.8
CASING JOINT(S)	7.000	K-55	26.00	5,997.8	6,161.7
FLAG JOINT	7.000	K-55	26.00	6,161.7	6,181.8
CASING JOINT(S)	7.000	K-55	26.00	6,181.8	6,344.6
CASING JOINT(S)	7.000	N-80	26.00	6,344.6	7,787.8
FLOAT COLLAR	7.000			7,787.8	7,789.2
CASING JOINT(S)	7.000	N-80	26.00	7,789.2	7,831.8
FLOAT SHOE	7.000			7,831.8	7,834.0

INNER LINER Report Date: 7/22/1993 00:00

Item	OD (in)	Grade	Wt. (ppf)	TopMD (ft)	BtmMD (ft)
LINER HANGER	6.276	N-80	18.00	6,247.1	6,249.2
CASING JOINT(S)	5.000	N-80	18.00	6,249.2	7,486.6
FLOAT COLLAR	5.000		18.00	7,486.6	7,488.2
GUIDE SHOE	5.000		18.00	7,488.2	7,489.0

Well: 337-35S S/T/R: 35S/30S/24E

CASING CEMENT DETAIL
- - -
Sfc Csg. Cmt Vol.: 450 cf
Hole Size: 17.5"
Top Job: no
Rtns to Sfc: 7 cf
TOC: sfc
- - -

Interm Csg. Cmt Vol.: 1505 cf
Hole Size: 12.25"
Top Job: no
Rtns to Sfc: 180 cf
TOC: sfc
- - -

Prod. Csg. Cmt Vol.: 2755 cf
Hole Size: 8.75"
Top Job: no
Rtns to Sfc: 100 cf
TOC: sfc
- - -

Liner Cmt Vol.:
Hole Size:
Top Job:
Rtns to Sfc:
TTOC:
- - -
Top of Formation:
UBA: 6862'
BLW: 7356'

Volume Behind Pipe:
1.3 Yield Assumed
Theoretical Calculations (TTOC)

OCCIDENTAL OF ELK HILLS INC

337A-34S

Event: WELL MAINT - RIGLESS
Event End:
Sec. Reason:

Water Depth: 993.7ft
Datum: ORIGINAL KB @ 1,015.70ft (default)
API No.: 0403028942

Wellbore: ORIGINAL HOLE
PBMD: 7,396.0ft
Btm TMD: 7,500.0ft
Spud Date: 1/17/2006 00:00
BH Coord X: 6,147,112.95uss ft
BH Coord Y: 2,287,779.12uss ft

Casing Shoes (ft) | Schematic (8/3/2009) | Openings Top/Btm/Type/Status

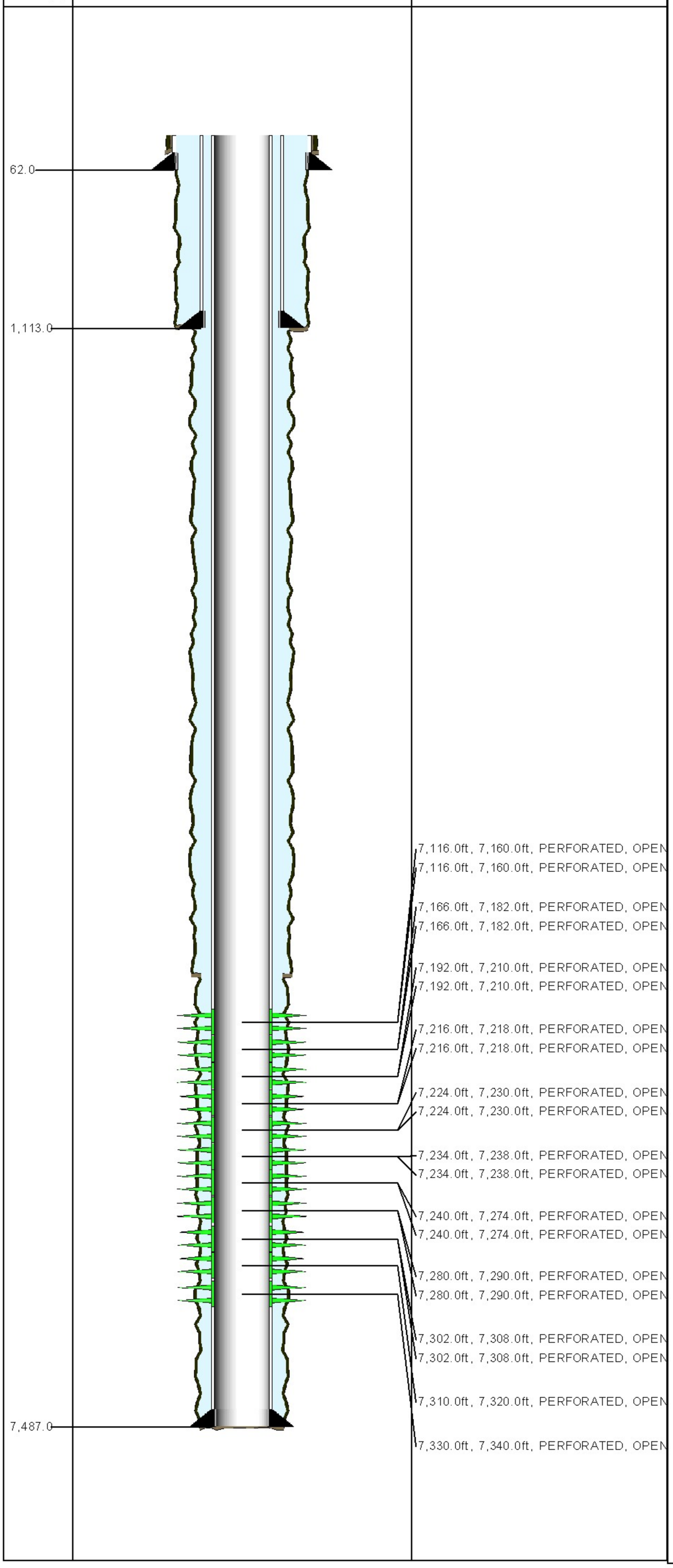

Report Date: 4/11/2006 00:00

Component	Top MD (ft)	Btm MD (ft)
TH-DBB	22.0	22.6
PUPJNT	22.6	42.7
TBGJNT	42.7	2,391.4
GLM	2,391.4	2,400.0
TBGJNT	2,400.0	4,384.6
GLM	4,384.6	4,393.2
TBGJNT	4,393.2	5,995.0
GLM	5,995.0	6,003.6
TBGJNT	6,003.6	7,017.4
GLM	7,017.4	7,026.0
TBGJNT	7,026.0	7,058.7
ON-OFF	7,058.7	7,060.2
PKR	7,060.2	7,064.2
PUPJNT	7,064.2	7,074.4
FATNIP	7,074.4	7,075.8
WLREG	7,075.8	7,076.3

CONDUCTOR CASING Report Date: 1/12/2006 00:00

Item	OD (in)	Grade	Wt. (ppf)	TopMD (ft)	BtmMD (ft)
CASING JOINT(S)	16.000			22.0	62.0

SURFACE CASING Report Date: 1/19/2006 00:00

Item	OD (in)	Grade	Wt. (ppf)	TopMD (ft)	BtmMD (ft)
CASING JOINT(S)	9.625	K-55	36.00	22.0	1,073.9
	9.625			1,073.9	1,073.9
CASING JOINT(S)	9.625	K-55	36.00	1,073.9	1,111.8
GUIDE SHOE	9.625			1,111.8	1,113.0

PRODUCTION CASING Report Date: 1/28/2006 00:00

Item	OD (in)	Grade	Wt. (ppf)	TopMD (ft)	BtmMD (ft)
CASING JOINT(S)	7.000	N-80	26.00	22.0	7,023.2
FLAG JOINT	7.000	N-80	26.00	7,023.2	7,045.9
CASING JOINT(S)	7.000	N-80	26.00	7,045.9	7,395.8
FLOAT COLLAR	7.000	N-80		7,395.8	7,397.2
CASING JOINT(S)	7.000	N-80	26.00	7,397.2	7,485.3
FLOAT SHOE	7.000	N-80		7,485.3	7,487.0

Well: 337A-34S S/T/R: 34S/30S/24E

CASING CEMENT DETAIL
- - -
Sfc Csg. Cmt Vol.: 1046 cf
Hole Size: 13.5"
Top Job: No
Rtns to Sfc:
TTOC: Sfc
- - -

Interm Csg. Cmt Vol.:
Hole Size:
Top Job:
Rtns to Sfc:
TOC:
- - -

Prod. Csg. Cmt Vol.: 2291 cf
Hole Size: 9.875"
Top Job: No
Rtns to Sfc: 112 cf
TOC: Sfc

Liner Cmt Vol.:
Hole Size:
Top Job:
Rtns to Sfc:
TTOC:
- - -
Top of Formation:
UBA: 6843'
BLW: 7355'

Volume Behind Pipe:
1.3 Yield Assumed
Theoretical Calculations (TTOC)

OCCIDENTAL OF ELK HILLS INC

337X-34S

Event: WELL MAINT - RIGLESS
Event End: 3/2/2009 00:00
Sec. Reason:

Ground Level: 994.0ft
Datum: ORIGINAL KB @ 1,017.00ft (default)
API No.: 0403020203

Wellbore: ORIGINAL HOLE
PBMD: 7,418.0ft
Btm TMD: 7,520.0ft
Spud Date: 3/16/2002 00:00
BH Coord X: 6,146,680.38uss ft
BH Coord Y: 2,287,379.56uss ft

Casing Shoes (ft) | Schematic (4/1/2009) | Openings Top/Btm/Type/Status

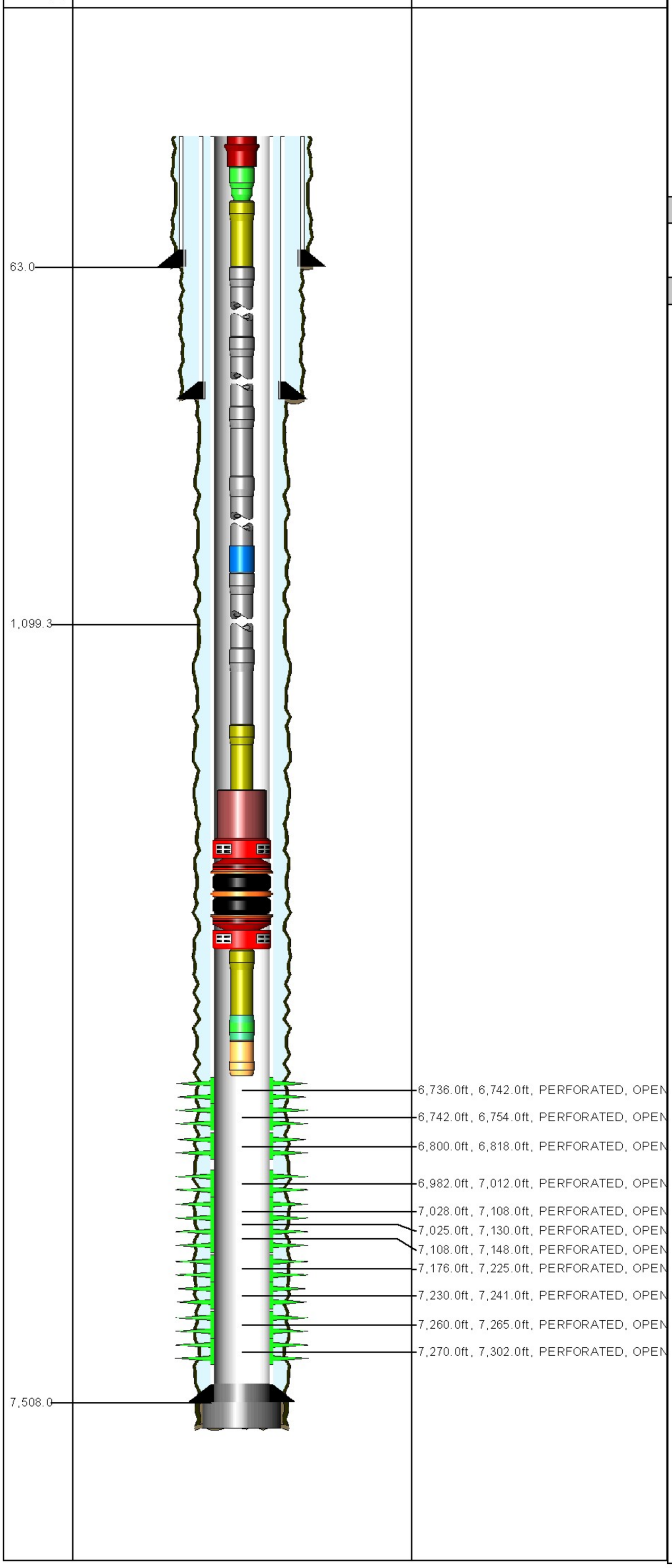

TUBING STRING Report Date: 11/12/2007 00:00

Component	Top MD (ft)	Btm MD (ft)
TH-DBB	23.0	23.6
FATNIP	23.6	25.4
PUPJNT	25.4	27.5
CAS	27.5	6,650.8
JETPMP	6,650.8	6,658.0
CAS	6,658.0	6,689.2
PUPJNT	6,689.2	6,699.4
ON-OFF	6,699.4	6,701.0
PKR	6,701.0	6,705.0
PUPJNT	6,705.0	6,711.3
LNDNIP	6,711.3	6,712.5
WLREG	6,712.5	6,713.0

PLUG BACK Report Date: 4/23/2002 00:00

Component	Top MD (ft)	Btm MD (ft)
CEMENT	7,418.0	7,508.0

PLUG BACK Report Date: 3/31/2002 00:00

Component	Top MD (ft)	Btm MD (ft)
CEMENT	7,508.0	7,520.0

CONDUCTOR CASING Report Date: 3/11/2002 00:00

Item	OD (in)	Grade	Wt. (ppf)	TopMD (ft)	BtmMD (ft)
CASING JOINT(S)	14.000			23.0	63.0

SURFACE CASING Report Date: 3/18/2002 00:00

Item	OD (in)	Grade	Wt. (ppf)	TopMD (ft)	BtmMD (ft)
CASING JOINT(S)	9.625	K-55	36.00	23.0	1,025.4
	9.625		36.00	1,025.4	1,025.4
CASING JOINT(S)	9.625	K-55	36.00	1,025.4	1,072.8
GUIDE SHOE	9.625	K-55	36.00	1,072.8	1,074.0

PRODUCTION CASING Report Date: 3/31/2002 00:00

Item	OD (in)	Grade	Wt. (ppf)	TopMD (ft)	BtmMD (ft)
CASING JOINT(S)	7.000	P-110	26.00	23.0	6,533.0
FLAG JOINT	7.000	P-110	26.00	6,533.0	6,548.5
CASING JOINT(S)	7.000	P-110	26.00	6,548.5	7,417.7
FLOAT COLLAR	7.000	P-110	26.00	7,417.7	7,419.2
CASING JOINT(S)	7.000	P-110	26.00	7,419.2	7,506.5
FLOAT SHOE	7.000	P-110	26.00	7,506.5	7,508.0

Well: 337X-34S S/T/R: 34S/30S/24E

CASING CEMENT DETAIL
- - -
Sfc Csg. Cmt Vol.: 670 cf
Hole Size: 12.25"
Top Job: No
Rtns to Sfc: 112 cf
TOC: Sfc
- - -

Interm Csg. Cmt Vol.:
Hole Size:
Top Job:
Rtns to Sfc:
TOC:
- - -

Prod. Csg. Cmt Vol.: 1761 cf
Hole Size: 8.75"
Top Job: No
Rtns to Sfc:
TTOC: Sfc

Liner Cmt Vol.:
Hole Size:
Top Job:
Rtns to Sfc:
TTOC:
- - -
Top of Formation:
UBA" 6849'
BLW: 7344'

Volume Behind Pipe:
1.3 Yield Assumed
Theoretical Calculations (TTOC)

OCCIDENTAL OF ELK HILLS INC

338-34S

Event: WELL ENHANCEMENT
Event End:
Sec. Reason:

Ground Level: 948.0ft
Datum: ORIGINAL KB @ 969.00ft (default)
API No.: 0402985062

Wellbore: ST 1
PBMD: 6,330.0ft
Btm TMD: 7,623.0ft
Spud Date: 11/2/1989 00:00
BH Coord X: 6,146,972.17uss ft
BH Coord Y: 2,286,868.75uss ft

Casing Shoes (ft) | Schematic (8/1/2008) | Openings Top/Btm/Type/Status

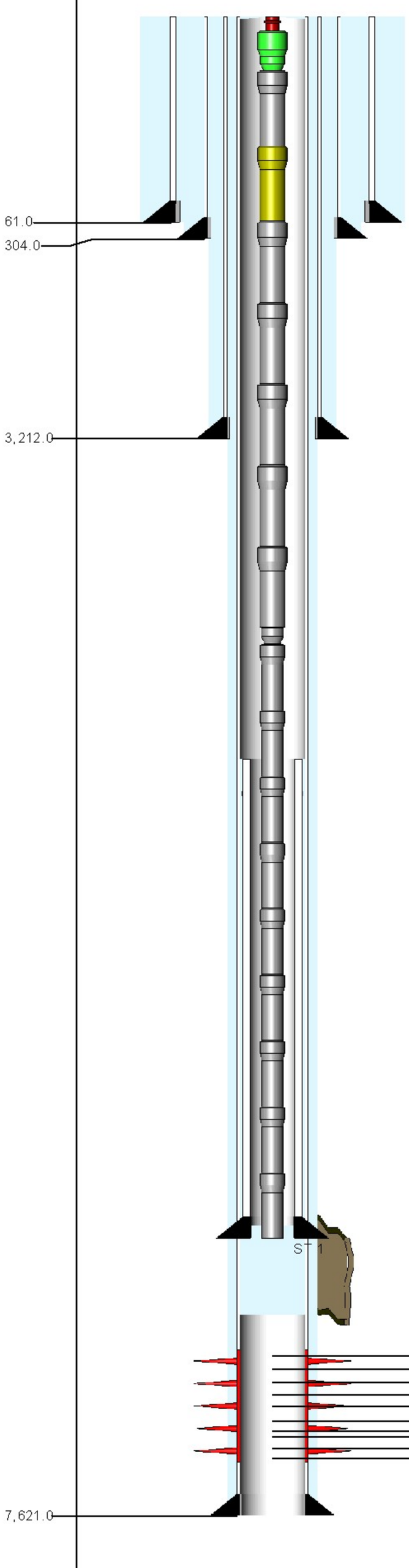

6,838.0ft, 6,895.0ft, PERFORATED, ABAN
6,915.0ft, 6,940.0ft, PERFORATED, ABAN
6,960.0ft, 7,025.0ft, PERFORATED, ABAN
7,045.0ft, 7,055.0ft, PERFORATED, ABAN
7,075.0ft, 7,135.0ft, PERFORATED, ABAN
7,155.0ft, 7,195.0ft, PERFORATED, ABAN
7,215.0ft, 7,225.0ft, PERFORATED, ABAN
7,238.0ft, 7,255.0ft, PERFORATED, ABAN
7,285.0ft, 7,316.0ft, PERFORATED, ABAN
7,328.0ft, 7,368.0ft, PERFORATED, ABAN

TUBING STRING Report Date: 11/29/2005 00:00

Component	Top MD (ft)	Btm MD (ft)
TH-DBB	21.0	21.7
FATNIP	21.7	22.3
TBGJNT	22.3	25.8
PUPJNT	25.8	48.7
TBGJNT	48.7	5,958.7
XO	5,958.7	5,959.8
TBGJNT	5,959.8	6,912.2
ON-OFF	6,912.2	6,913.4
PKR	6,913.4	6,918.6
TBGJNT	6,918.6	6,981.9
PUPJNT	6,981.9	6,988.0
TBGJNT	6,988.0	7,020.4
INJM-D	7,020.4	7,027.0
TBGJNT	7,027.0	7,058.3
PUPJNT	7,058.3	7,068.4
PKR	7,068.4	7,072.4
PUPJNT	7,072.4	7,082.5
PNIP-O	7,082.5	7,083.9
PUPJNT	7,083.9	7,093.9
BELCOL	7,093.9	7,094.5

CONDUCTOR CASING Report Date: 11/2/1989 00:00

Item	OD (in)	Grade	Wt. (ppf)	TopMD (ft)	BtmMD (ft)
CASING JOINT(S)	20.000	H-40	94.00	21.0	61.0

SURFACE CASING Report Date: 11/6/1989 00:00

Item	OD (in)	Grade	Wt. (ppf)	TopMD (ft)	BtmMD (ft)
CASING JOINT(S)	13.375	H-40	48.00	21.0	304.0

INTERMEDIATE CASING Report Date: 11/11/1989 00:00

Item	OD (in)	Grade	Wt. (ppf)	TopMD (ft)	BtmMD (ft)
CASING JOINT(S)	9.625	K-55	40.00	21.0	3,212.0

PRODUCTION CASING Report Date: 11/27/1989 00:00

Item	OD (in)	Grade	Wt. (ppf)	TopMD (ft)	BtmMD (ft)
CASING JOINT(S)	7.000	K-55	23.00	21.0	4,584.0
CASING JOINT(S)	7.000	K-55	26.00	4,584.0	6,180.0
CASING JOINT(S)	7.000	N-80	26.00	6,180.0	7,621.0

LINER Report Date: 4/12/2002 00:00

Item	OD (in)	Grade	Wt. (ppf)	TopMD (ft)	BtmMD (ft)
LINER HANGER PACKER	5.776	N-80	26.00	6,081.0	6,094.0
PBR	5.469	N-80	26.00	6,094.0	6,096.5
LINER HANGER	5.990	N-80	26.00	6,096.5	6,103.0
CROSSOVER	5.474	N-80	26.00	6,103.0	6,107.1
CASING JOINT(S)	5.000	N-80	15.00	6,107.1	7,076.0
CASING JOINT(S)	5.000	P-110	18.00	7,076.0	7,365.6
LANDING COLLAR	5.000	N-80	18.00	7,365.6	7,365.6
FLOAT COLLAR	5.000	N-80	18.00	7,365.6	7,365.7
CASING JOINT(S)	5.000	P-110	18.00	7,365.7	7,449.3
FLOAT SHOE	5.000	N-80	18.00	7,449.3	7,449.7

Well: 338-34S S/T/R: 34S/30S/24E

CASING CEMENT DETAIL
- - -
Sfc Csg. Cmt Vol.: 450 cf
Hole Size: 17.5"
Top Job: No
Rtns to Sfc: 56 cf
TOC: Sfc
- - -

Interm Csg. Cmt Vol.: 1835 cf
Hole Size: 12.25"
Top Job: No
Rtns to Sfc: 129 cf
TOC: Sfc
- - -

Prod. Csg. Cmt Vol.: 1770 cf
Hole Size: 8.75"
Top Job: No
Rtns to Sfc: Trace
TOC: Sfc

Liner Cmt Vol.:
Hole Size:
Top Job:
Rtns to Sfc:
TTOC:
- - -
Top of Formation:
UBA: 6835'
BLW: 7367'

Volume Behind Pipe:
1.3 Yield Assumed
Theoretical Calculations (TTOC)

OCCIDENTAL OF ELK HILLS INC

338-34S

Event: WELL ENHANCEMENT
Event End:
Sec. Reason:

Ground Level: 948.0ft
Datum: ORIGINAL KB @ 969.00ft (default)
API No.: 0402985062

Wellbore: ST 1
PBMD: 7,396.0ft
Btm TMD: 7,453.0ft
Spud Date: 11/2/1989 00:00
BH Coord X: 6,147,024.21uss ft
BH Coord Y: 2,287,137.93uss ft

Casing Shoes (ft) | Schematic (8/1/2008) | Openings Top/Btm/Type/Status

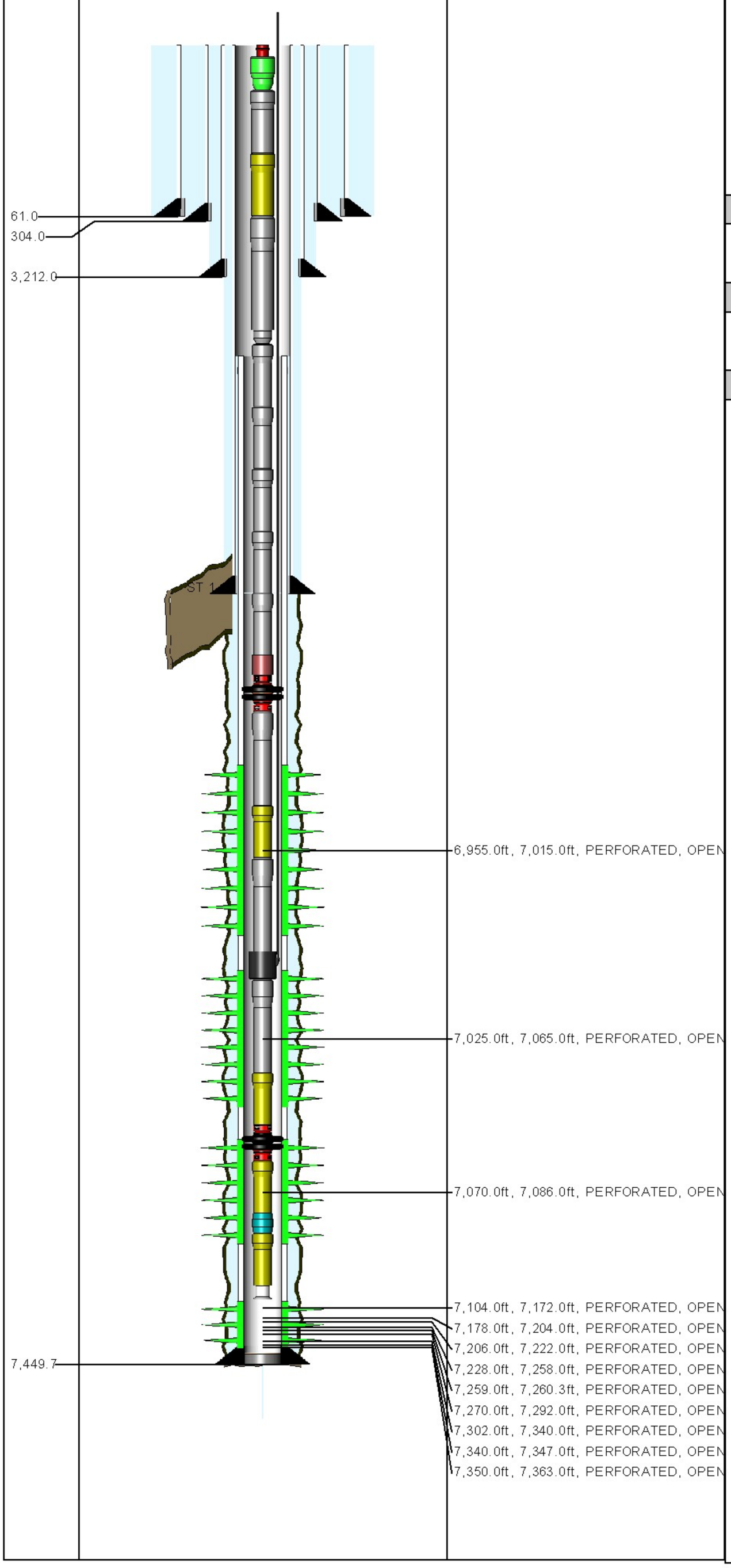

TUBING STRING Report Date: 11/29/2005 00:00

Component	Top MD (ft)	Btm MD (ft)
TH-DBB	21.0	21.7
FATNIP	21.7	22.3
TBGJNT	22.3	25.8
PUPJNT	25.8	48.7
TBGJNT	48.7	5,958.7
XO	5,958.7	5,959.8
TBGJNT	5,959.8	6,912.2
ON-OFF	6,912.2	6,913.4
PKR	6,913.4	6,918.6
TBGJNT	6,918.6	6,981.9
PUPJNT	6,981.9	6,988.0
TBGJNT	6,988.0	7,020.4
INJM-D	7,020.4	7,027.0
TBGJNT	7,027.0	7,058.3
PUPJNT	7,058.3	7,068.4
PKR	7,068.4	7,072.4
PUPJNT	7,072.4	7,082.5
PNIP-O	7,082.5	7,083.9
PUPJNT	7,083.9	7,093.9
BELCOL	7,093.9	7,094.5

PLUG BACK Report Date: 9/23/2002 00:00

Component	Top MD (ft)	Btm MD (ft)
FILL	7,390.0	7,396.0

PLUG BACK Report Date: 4/12/2002 00:00

Component	Top MD (ft)	Btm MD (ft)
CEMENT	7,396.0	7,449.7

PLUG BACK Report Date: 4/12/2002 00:00

Component	Top MD (ft)	Btm MD (ft)
CEMENT	7,449.7	7,453.0

CONDUCTOR CASING Report Date: 11/2/1989 00:00

Item	OD (in)	Grade	Wt. (ppf)	TopMD (ft)	BtmMD (ft)
CASING JOINT(S)	20.000	H-40	94.00	21.0	61.0

SURFACE CASING Report Date: 11/6/1989 00:00

Item	OD (in)	Grade	Wt. (ppf)	TopMD (ft)	BtmMD (ft)
CASING JOINT(S)	13.375	H-40	48.00	21.0	304.0

INTERMEDIATE CASING Report Date: 11/11/1989 00:00

Item	OD (in)	Grade	Wt. (ppf)	TopMD (ft)	BtmMD (ft)
CASING JOINT(S)	9.625	K-55	40.00	21.0	3,212.0

PRODUCTION CASING Report Date: 11/27/1989 00:00

Item	OD (in)	Grade	Wt. (ppf)	TopMD (ft)	BtmMD (ft)
CASING JOINT(S)	7.000	K-55	23.00	21.0	4,584.0
CASING JOINT(S)	7.000	K-55	26.00	4,584.0	6,180.0
CASING JOINT(S)	7.000	N-80	26.00	6,180.0	7,621.0

LINER Report Date: 4/12/2002 00:00

Item	OD (in)	Grade	Wt. (ppf)	TopMD (ft)	BtmMD (ft)
LINER HANGER PACKER	5.776	N-80	26.00	6,081.0	6,094.0
PBR	5.469	N-80	26.00	6,094.0	6,096.5
LINER HANGER	5.990	N-80	26.00	6,096.5	6,103.0
CROSSOVER	5.474	N-80	26.00	6,103.0	6,107.1
CASING JOINT(S)	5.000	N-80	15.00	6,107.1	7,076.0
CASING JOINT(S)	5.000	P-110	18.00	7,076.0	7,365.6
LANDING COLLAR	5.000	N-80	18.00	7,365.6	7,365.6
FLOAT COLLAR	5.000	N-80	18.00	7,365.6	7,365.7
CASING JOINT(S)	5.000	P-110	18.00	7,365.7	7,449.3
FLOAT SHOE	5.000	N-80	18.00	7,449.3	7,449.7

Well: 338-34S-RD1 S/T/R: 34S/30S/24E

CASING CEMENT DETAIL
- - -
Sfc Csg. Cmt Vol.: 450 cf
Hole Size: 17.5"
Top Job: No
Rtns to Sfc: 56 cf
TOC: Sfc
- - -

Interm Csg. Cmt Vol.: 1835 cf
Hole Size: 12.25"
Top Job: No
Rtns to Sfc: 129 cf
TOC: Sfc
- - -

Prod. Csg. Cmt Vol.: 1770 cf
Hole Size: 8.75"
Top Job: No
Rtns to Sfc: Trace
TOC: Sfc

Liner Cmt Vol.: 230 cf
Hole Size: 7"
Top Job: No
Rtns to Sfc: No
TTOC: TOL
- - -
Top of Formation:
UBA: 6833'
BLW: 7392'

Volume Behind Pipe:
1.3 Yield Assumed
Theoretical Calculations (TTOC)

Event: WELL MAINT - RIGLESS
Event End:
Sec. Reason:
End Status:
Well Classification: DEVELOPMENT

OCCIDENTAL OF ELK HILLS INC

338-35S

Ground Level: 776.0ft
Datum: ORIGINAL KB @ 785.00ft (default)
API No.: 0402927777

Wellbore: ORIGINAL HOLE
PBMD: 5,875.0ft
Btm TMD: 6,990.0ft
Spud Date: 12/1/1950 00:00
BH Coord X: 6,152,429.91uss ft
BH Coord Y: 2,286,759.72uss ft

Casing Shoes (ft)	Schematic (7/1/2009)	Openings Top/Btm/Type/Status
39.0		
196.0		
3,170.0		3,147.0ft, 3,148.0ft, PERFORATED, SQUEEZ
6,570.0		6,215.0ft, 6,216.0ft, PERFORATED, ABANDO
		6,770.0ft, 6,843.0ft, REPERFORATED, ABANDONED
		6,770.0ft, 6,843.0ft, PERFORATED, ABANDO
		6,853.0ft, 6,890.0ft, REPERFORATED, ABANDONED
		6,853.0ft, 6,890.0ft, PERFORATED, ABANDO
		6,900.0ft, 6,983.0ft, PERFORATED, ABANDO
6,987.0		

TUBING STRING Report Date: 4/17/2009 00:00

Component	Top MD (ft)	Btm MD (ft)
TH-DBB	9.0	9.7
FATNIP	9.7	10.4
CAS	10.4	2,179.3
GLM-V	2,179.3	2,187.9
CAS	2,187.9	3,982.1
GLM-V	3,982.1	3,991.4
CAS	3,991.4	5,483.8
GLM-V	5,483.8	5,493.7
CAS	5,493.7	5,553.2
XO	5,553.2	5,554.3
CAS	5,554.3	6,631.3
GLM-V	6,631.3	6,638.1
CAS	6,638.1	6,668.8
ON-OFF	6,668.8	6,670.8
PKR-S	6,670.8	6,674.8
PUPJNT	6,674.8	6,684.7
PRONIP	6,684.7	6,686.1
STCOLL	6,686.1	6,686.6

PLUG BACK Report Date: 9/24/2002 00:00

Component	Top MD (ft)	Btm MD (ft)
BP-PRM	5,875.0	5,878.0

PLUG BACK Report Date: 8/27/2002 00:00

Component	Top MD (ft)	Btm MD (ft)
CEMENT	5,945.0	6,403.0
CEMENT	6,403.0	6,830.0

PLUG BACK Report Date: 8/24/2002 00:00

Component	Top MD (ft)	Btm MD (ft)
JUNK	6,830.0	6,849.0

PLUG BACK Report Date: 7/4/1993 00:00

Component	Top MD (ft)	Btm MD (ft)
CR-PRM	6,899.0	6,902.0

PLUG BACK Report Date: 7/7/1993 00:00

Component	Top MD (ft)	Btm MD (ft)
CEMENT	6,902.0	6,984.0

PLUG BACK Report Date: 1/30/1951 00:00

Component	Top MD (ft)	Btm MD (ft)
CEMENT	6,984.0	6,987.0

PLUG BACK Report Date: 1/28/1951 00:00

Component	Top MD (ft)	Btm MD (ft)
CEMENT	6,987.0	6,990.0

CONDUCTOR CASING Report Date: 12/1/1950 00:00

Item	OD (in)	Grade	Wt. (ppf)	TopMD (ft)	BtmMD (ft)
CASING JOINT(S)	26.000			9.0	39.0

SURFACE CASING Report Date: 12/26/1950 00:00

Item	OD (in)	Grade	Wt. (ppf)	TopMD (ft)	BtmMD (ft)
CASING JOINT(S)	16.000	H-40	65.00	9.0	196.0

INTERMEDIATE CASING Report Date: 12/30/1950 00:00

Item	OD (in)	Grade	Wt. (ppf)	TopMD (ft)	BtmMD (ft)
CASING JOINT(S)	10.750	J-55	40.50	9.0	2,083.0
CASING JOINT(S)	10.750	J-55	45.50	2,083.0	3,170.0

PRODUCTION CASING Report Date: 1/16/1951 00:00

Item	OD (in)	Grade	Wt. (ppf)	TopMD (ft)	BtmMD (ft)
CASING JOINT(S)	7.000	N-80	26.00	9.0	71.0
CASING JOINT(S)	7.000	N-80	23.00	71.0	5,840.0
CASING JOINT(S)	7.000	N-80	26.00	5,840.0	6,570.0

LINER Report Date: 1/28/1951 00:00

Item	OD (in)	Grade	Wt. (ppf)	TopMD (ft)	BtmMD (ft)
LINER HANGER	6.276	J-55	20.00	6,403.0	6,405.0
CASING JOINT(S)	5.500	J-55	20.00	6,405.0	6,985.0
FLOAT SHOE	6.276	J-55	20.00	6,985.0	6,987.0

LINER Report Date: 10/2/2002 00:00

Item	OD (in)	Grade	Wt. (ppf)	TopMD (ft)	BtmMD (ft)
TIE BACK RECEPTACLE	6.156			5,607.0	5,613.0
SET SHOE	5.875			5,613.0	5,620.0
LINER HANGER	5.934			5,620.0	5,627.2
PBR	5.250			5,627.2	5,630.2
CROSSOVER	5.000	N-80	15.00	5,630.2	5,631.0
CASING JOINT(S)	5.000	N-80	15.00	5,631.0	7,356.9
LANDING COLLAR	5.000	N-80	15.00	7,356.9	7,358.2
CASING JOINT(S)	5.000	N-80	15.00	7,358.2	7,452.2
FLOAT SHOE	5.000	N-80	15.00	7,452.2	7,455.0

Well: 338-35S S/T/R: 35S/30S/24E

CASING CEMENT DETAIL
- - -
Sfc Csg. Cmt Vol.: 450 sks
Hole Size: 22"
Top Job: no
Rtns to Sfc: not recorded
TTOC: sfc
- - -

Interm Csg. Cmt Vol.: 600 sks
Hole Size: 15"
Top Job: no
Rtns to Sfc: no
TTOC: 1400' per thermometric survey
- - -

Prod. Csg. Cmt Vol.: 400 sks
Hole Size: 9.75"
Top Job: no
Rtns to Sfc: no
TTOC: 4090' per thermometric survey
- - -

Liner Cmt Vol.: 106 sks
Hole Size: 6.125"
Top Job: no
Rtns to Sfc: no
TTOC: TOL
- - -
Top of Formation:
UBA: 6878'
BLW: N/A

Volume Behind Pipe:
1.3 Yield Assumed
Theoretical Calculations (TTOC)

Event: WELL MAINT - RIGLESS
Event End:
Sec. Reason:
End Status:
Well Classification: DEVELOPMENT

OCCIDENTAL OF ELK HILLS INC

338-35S

Ground Level: 776.0ft
Datum: ORIGINAL KB @ 785.00ft (default)
API No.: 0402927777

Wellbore: ST 1
PBMD: 0.0ft
Btm TMD: 7,457.0ft
Spud Date: 12/1/1950 00:00
BH Coord X: 6,152,414.86uss ft
BH Coord Y: 2,287,609.88uss ft

Casing Shoes (ft)	Schematic (7/1/2009)	Openings Top/Btm/Type/Status
39.0		
196.0		
		3,147.0ft, 3,148.0ft, PERFORATED, SQUEEZ
3,170.0		
	ORIGINAL HOLE	
		6,713.0ft, 6,736.0ft, PERFORATED, OPEN
		6,772.0ft, 6,786.0ft, PERFORATED, OPEN
		6,803.0ft, 6,813.0ft, PERFORATED, OPEN
		6,836.0ft, 6,876.0ft, PERFORATED, OPEN
		7,174.0ft, 7,215.0ft, PERFORATED, OPEN
		7,223.0ft, 7,230.0ft, PERFORATED, OPEN
		7,238.0ft, 7,255.0ft, PERFORATED, OPEN
		7,260.0ft, 7,273.0ft, PERFORATED, OPEN
		7,278.0ft, 7,289.0ft, PERFORATED, OPEN
		7,292.0ft, 7,301.0ft, PERFORATED, OPEN
		7,330.0ft, 7,349.0ft, PERFORATED, OPEN
		7,349.0ft, 7,353.0ft, PERFORATED, OPEN
		7,359.0ft, 7,366.0ft, PERFORATED, OPEN
		7,369.0ft, 7,386.0ft, PERFORATED, OPEN
		7,392.0ft, 7,407.0ft, PERFORATED, OPEN
7,455.0		

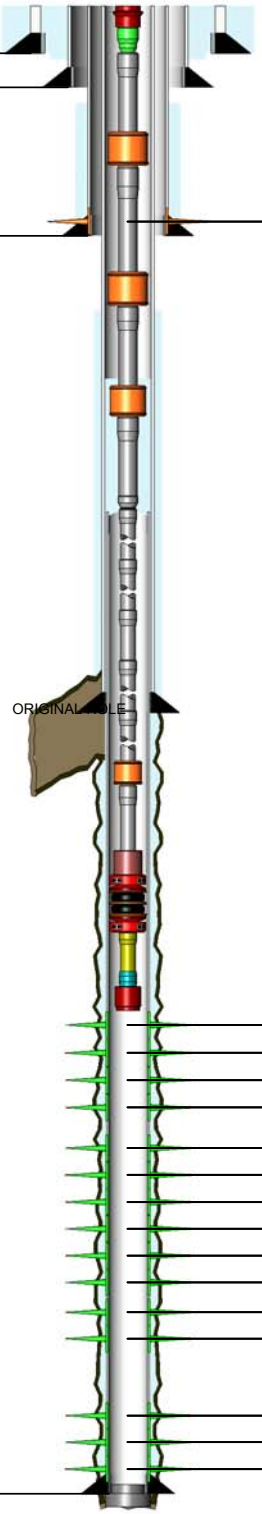

TUBING STRING Report Date: 4/17/2009 00:00

Component	Top MD (ft)	Btm MD (ft)
TH-DBB	9.0	9.7
FATNIP	9.7	10.4
CAS	10.4	2,179.3
GLM-V	2,179.3	2,187.9
CAS	2,187.9	3,982.1
GLM-V	3,982.1	3,991.4
CAS	3,991.4	5,483.8
GLM-V	5,483.8	5,493.7
CAS	5,493.7	5,553.2
XO	5,553.2	5,554.3
CAS	5,554.3	6,631.3
GLM-V	6,631.3	6,638.1
CAS	6,638.1	6,668.8
ON-OFF	6,668.8	6,670.8
PKR-S	6,670.8	6,674.8
PUPJNT	6,674.8	6,684.7
PRONIP	6,684.7	6,686.1
STCOLL	6,686.1	6,686.6

PLUG BACK Report Date: 11/7/2002 00:00

Component	Top MD (ft)	Btm MD (ft)
CEMENT	7,420.0	7,455.0

PLUG BACK Report Date: 10/2/2002 00:00

Component	Top MD (ft)	Btm MD (ft)
CEMENT	7,455.0	7,457.0

CONDUCTOR CASING Report Date: 12/1/1950 00:00

Item	OD (in)	Grade	Wt. (ppf)	TopMD (ft)	BtmMD (ft)
CASING JOINT(S)	26.000			9.0	39.0

SURFACE CASING Report Date: 12/26/1950 00:00

Item	OD (in)	Grade	Wt. (ppf)	TopMD (ft)	BtmMD (ft)
CASING JOINT(S)	16.000	H-40	65.00	9.0	196.0

INTERMEDIATE CASING Report Date: 12/30/1950 00:00

Item	OD (in)	Grade	Wt. (ppf)	TopMD (ft)	BtmMD (ft)
CASING JOINT(S)	10.750	J-55	40.50	9.0	2,083.0
CASING JOINT(S)	10.750	J-55	45.50	2,083.0	3,170.0

PRODUCTION CASING Report Date: 1/16/1951 00:00

Item	OD (in)	Grade	Wt. (ppf)	TopMD (ft)	BtmMD (ft)
CASING JOINT(S)	7.000	N-80	26.00	9.0	71.0
CASING JOINT(S)	7.000	N-80	23.00	71.0	5,840.0
CASING JOINT(S)	7.000	N-80	26.00	5,840.0	6,570.0

LINER Report Date: 10/2/2002 00:00

Item	OD (in)	Grade	Wt. (ppf)	TopMD (ft)	BtmMD (ft)
TIE BACK RECEPTACLE	5.750			5,607.0	5,613.0
SET SHOE	5.875			5,613.0	5,620.0
LINER HANGER	5.934			5,620.0	5,627.2
PBR	5.250			5,627.2	5,630.2
CROSSOVER	5.000	N-80	15.00	5,630.2	5,631.0
CASING JOINT(S)	5.000	N-80	15.00	5,631.0	7,356.9
LANDING COLLAR	5.000	N-80	15.00	7,356.9	7,358.2
CASING JOINT(S)	5.000	N-80	15.00	7,358.2	7,452.2
FLOAT SHOE	5.000	N-80	15.00	7,452.2	7,455.0

Well: 338-35S-RD1 S/T/R: 35S/30S/24E

CASING CEMENT DETAIL
- - -
Sfc Csg. Cmt Vol.: 450 sks
Hole Size: 22"
Top Job: no
Rtns to Sfc: not recorded
TTOC: sfc
- - -

Interm Csg. Cmt Vol.: 600 sks
Hole Size: 15"
Top Job: no
Rtns to Sfc: no
TTOC: 1400' per thermometric survey
- - -

Prod. Csg. Cmt Vol.: 400 sks
Hole Size: 9.75"
Top Job: no
Rtns to Sfc: no
TTOC: 4090' per thermometric survey
- - -

Liner Cmt Vol.: 184 cf
Hole Size: 6.125"
Top Job: no
Rtns to Sfc: no
TTOC: TOL
- - -
Top of Formation:
UBA: 6883'
BLW:7410'

Volume Behind Pipe:
1.3 Yield Assumed
Theoretical Calculations (TTOC)

OCCIDENTAL OF ELK HILLS INC

338A-34S

Event: WELL MAINT - RIG
Event End: 5/19/2008 00:00
Sec. Reason: BODY BREAK

Water Depth: 979.5ft
Datum: ORIGINAL KB @ 1,002.50ft (default)
API No.: 0403031142

Wellbore: ORIGINAL HOLE
PBMD: 7,782.0ft
Btm TMD: 8,045.0ft
Spud Date: 9/30/2006 05:00
BH Coord X: 6,146,423.12uss ft
BH Coord Y: 2,284,939.38uss ft

Casing Shoes (ft)	Schematic (6/1/2008)	Openings Top/Btm/Type/Status

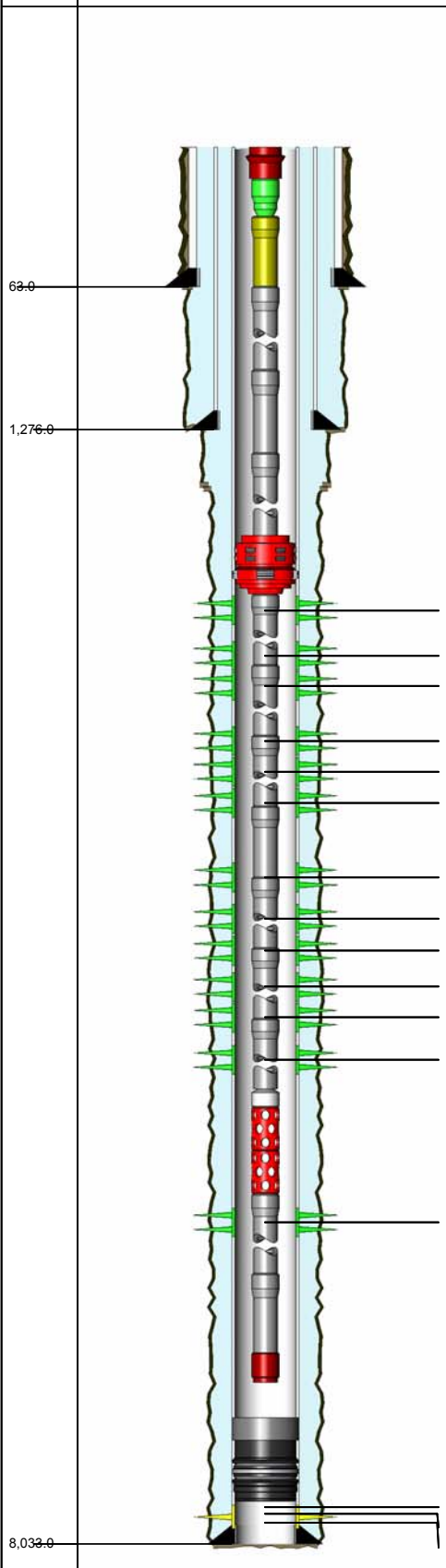

6,340.0ft, 6,357.0ft, PERFORATED, OPEN
6,520.0ft, 6,524.0ft, PERFORATED, OPEN
6,538.0ft, 6,542.0ft, PERFORATED, OPEN
6,616.0ft, 6,678.0ft, PERFORATED, OPEN
6,698.0ft, 6,762.0ft, PERFORATED, OPEN
6,786.0ft, 6,860.0ft, PERFORATED, OPEN
7,251.0ft, 7,280.0ft, PERFORATED, OPEN
7,380.0ft, 7,482.0ft, PERFORATED, OPEN
7,500.0ft, 7,546.0ft, PERFORATED, OPEN
7,577.0ft, 7,590.0ft, PERFORATED, OPEN
7,598.0ft, 7,644.0ft, PERFORATED, OPEN
7,675.0ft, 7,686.0ft, PERFORATED, OPEN
7,720.0ft, 7,744.0ft, PERFORATED, OPEN
7,815.0ft, 7,839.0ft, PERFORATED, ISOLATED
7,858.0ft, 7,868.0ft, PERFORATED, ISOLATED
7,880.0ft, 7,947.0ft, PERFORATED, ISOLATED

ROD STRING — Report Date: 5/19/2008 00:00

Component	Top MD (ft)	Btm MD (ft)
POLROD	0.0	36.0
PNYROD	36.0	54.0
ROD	54.0	924.0
COROD	924.0	2,084.0
COROD	2,084.0	7,584.0
RSTBAR	7,584.0	7,588.0
ON-OFF	7,588.0	7,589.0
RSTBAR	7,589.0	7,593.0
ROD	7,593.0	7,653.0
RSTBAR	7,653.0	7,657.0
INSPMP	7,657.0	7,681.0

TUBING STRING — Report Date: 9/25/2007 00:00

Component	Top MD (ft)	Btm MD (ft)
TH-DBB	23.0	23.7
FATNIP	23.7	24.3
PUPJNT	24.3	30.4
CAS	30.4	6,315.2
AC	6,315.2	6,317.6
CAS	6,317.6	7,707.4
PMPSH	7,707.4	7,708.0
PERFJT	7,708.0	7,712.2
PERFJT	7,712.2	7,716.4
CAS	7,716.4	7,748.1
STCOLL	7,748.1	7,748.5

PLUG BACK — Report Date: 11/1/2006 00:00

Component	Top MD (ft)	Btm MD (ft)
CEMENT	7,782.0	7,790.0
CR-PRM	7,790.0	7,792.0

CONDUCTOR CASING — Report Date: 9/25/2006 00:00

Item	OD (in)	Grade	Wt. (ppf)	TopMD (ft)	BtmMD (ft)
CASING JOINT(S)	16.000			23.0	63.0

SURFACE CASING — Report Date: 10/1/2006 00:00

Item	OD (in)	Grade	Wt. (ppf)	TopMD (ft)	BtmMD (ft)
CASING JOINT(S)	10.750	J-55	40.50	23.0	1,234.4
FLOAT COLLAR	10.750	J-55	40.50	1,234.4	1,234.4
CASING JOINT(S)	10.750	J-55	40.50	1,234.4	1,275.1
GUIDE SHOE	10.750	J-55	40.50	1,275.1	1,276.0

PRODUCTION CASING — Report Date: 10/16/2006 00:00

Item	OD (in)	Grade	Wt. (ppf)	TopMD (ft)	BtmMD (ft)
CASING JOINT(S)	7.000	K-55	23.00	23.0	3,852.8
CASING JOINT(S)	7.000	N-80	26.00	3,852.8	6,580.4
FLAG JOINT	7.000	K-55	26.00	6,580.4	6,588.8
CASING JOINT(S)	7.000	N-80	26.00	6,588.8	7,949.6
CASING FLOAT COLLAR	7.000	N-80		7,949.6	7,951.5
CASING JOINT(S)	7.000	N-80	26.00	7,951.5	8,031.8
CASING FLOAT SHOE	7.000	N-80		8,031.8	8,033.0

Well: 338A-34S S/T/R: 34S/30S/24E

CASING CEMENT DETAIL
- - -
Sfc Csg. Cmt Vol.: 1218 cf
Hole Size: 14.75"
Top Job: No
Rtns to Sfc: 168 cf
TOC: Sfc
- - -

Interm Csg. Cmt Vol.:
Hole Size:
Top Job:
Rtns to Sfc:
TOC:
- - -

Prod. Csg. Cmt Vol.: 3297 cf
Hole Size: 11.5"
Top Job: No
Rtns to Sfc: 224 cf
TOC: Sfc
- - -

Liner Cmt Vol.:
Hole Size:
Top Job:
Rtns to Sfc:
TTOC:
- - -
Top of Formation:
UBA: N/A
BLW: N/A

Volume Behind Pipe:
1.3 Yield Assumed
Theoretical Calculations (TTOC)

OCCIDENTAL OF ELK HILLS INC

338X-34S

Event: WELL MAINT - RIGLESS
Event End: 3/11/2009 00:00
Sec. Reason:

Ground Level: 938.3ft
Datum: ORIGINAL KB @ 958.30ft (default)
API No.: 0403019562

Wellbore: ORIGINAL HOLE
PBMD: 7,325.0ft
Btm TMD: 7,440.0ft
Spud Date: 11/22/2001 00:00
BH Coord X: 6,147,395.73uss ft
BH Coord Y: 2,287,340.07uss ft

Casing Shoes (ft) | Schematic (4/27/2009) | Openings Top/Btm/Type/Status

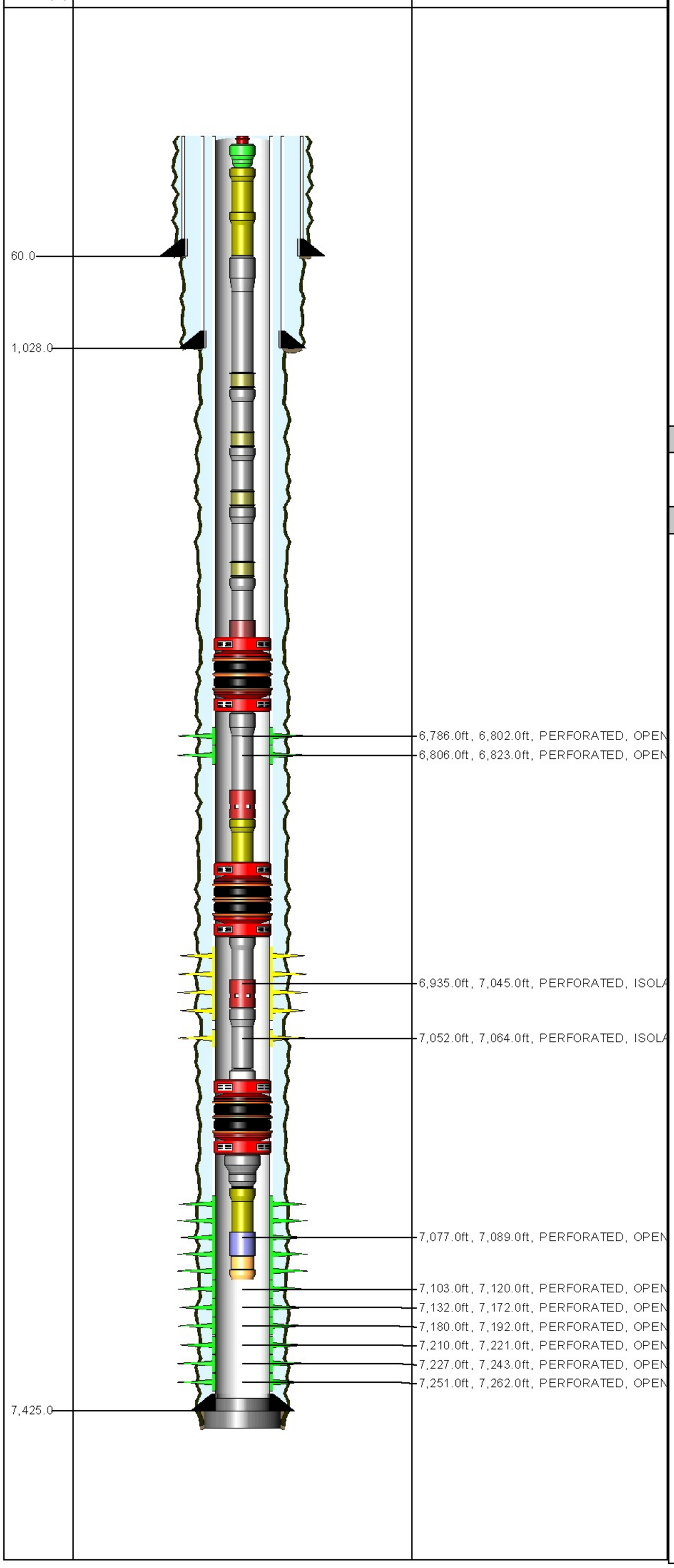

TUBING STRING Report Date: 10/21/2005 00:00

Component	Top MD (ft)	Btm MD (ft)
TH-DBB	20.0	20.8
FATNIP	20.8	21.4
PUPJNT	21.4	25.5
PUPJNT	25.5	35.7
TBGJNT	35.7	2,183.2
GLM	2,183.2	2,192.0
TBGJNT	2,192.0	3,983.6
GLM	3,983.6	3,992.0
TBGJNT	3,992.0	5,505.1
GLM	5,505.1	5,513.9
TBGJNT	5,513.9	6,680.3
GLM	6,680.3	6,689.1
TBGJNT	6,689.1	6,720.6
ON-OFF	6,720.6	6,722.1
PKR	6,722.1	6,728.7
TBGJNT	6,728.7	6,886.9
SS-O	6,886.9	6,890.8
PUPJNT	6,890.8	6,898.8
PKR	6,898.8	6,905.4
TBGJNT	6,905.4	7,032.1
SS-C	7,032.1	7,036.0
TBGJNT	7,036.0	7,068.0
SBLOC	7,068.0	7,069.0
PKR	7,069.0	7,073.7
XO	7,073.7	7,074.0
XO	7,074.0	7,075.2
PUPJNT	7,075.2	7,085.4
NOGO	7,085.4	7,086.5
WLREG	7,086.5	7,086.9

PLUG BACK Report Date: 12/6/2001 00:00

Component	Top MD (ft)	Btm MD (ft)
CEMENT	7,325.0	7,425.0

PLUG BACK Report Date: 12/6/2001 00:00

Component	Top MD (ft)	Btm MD (ft)
CEMENT	7,425.0	7,440.0

CONDUCTOR CASING Report Date: 11/20/2001 00:00

Item	OD (in)	Grade	Wt. (ppf)	TopMD (ft)	BtmMD (ft)
CASING JOINT(S)	14.000		49.70	20.0	60.0

SURFACE CASING Report Date: 11/23/2001 00:00

Item	OD (in)	Grade	Wt. (ppf)	TopMD (ft)	BtmMD (ft)
CASING JOINT(S)	9.625	K-55	36.00	20.0	981.9
	9.625			981.9	981.9
CASING JOINT(S)	9.625	K-55	36.00	981.9	1,027.0
GUIDE SHOE	9.625	K-55	36.00	1,027.0	1,028.0

PRODUCTION CASING Report Date: 12/6/2001 00:00

Item	OD (in)	Grade	Wt. (ppf)	TopMD (ft)	BtmMD (ft)
CASING JOINT(S)	7.000	N-80	26.00	20.0	6,459.8
FLAG JOINT	7.000	N-80	26.00	6,459.8	6,481.2
CASING JOINT(S)	7.000	N-80	26.00	6,481.2	7,356.6
FLOAT COLLAR	7.000		26.00	7,356.6	7,358.4
CASING JOINT(S)	7.000	N-80	26.00	7,358.4	7,423.5
FLOAT SHOE	7.000		26.00	7,423.5	7,425.0

Well: 338X-34S S/T/R: 34S/30S/24E

CASING CEMENT DETAIL
- - -
Sfc Csg. Cmt Vol.: 637 cf
Hole Size: 12.25"
Top Job: No
Rtns to Sfc: 112 cf
TOC: Sfc
- - -

Interm Csg. Cmt Vol.
Hole Size:
Top Job:
Rtns to Sfc:
TOC:
- - -

Prod. Csg. Cmt Vol.: 2094 cf
Hole Size: 8.75"
Top Job: No
Rtns to Sfc: 337 cf
TOC: Sfc

Liner Cmt Vol.:
Hole Size:
Top Job:
Rtns to Sfc:
TTOC:
- - -
Top of Formation:
UBA: 6805'
BLW: 7289'

Volume Behind Pipe:
1.3 Yield Assumed
Theoretical Calculations (TTOC)

OCCIDENTAL OF ELK HILLS INC

341-2G

Event: WELL ENHANCEMENT
Event End:
Sec. Reason:
End Status:
Well Classification: DEVELOPMENT

Ground Level: 844.1ft
Datum: ORIGINAL KB @ 867.10ft (default)
API No.: 0403026904

Wellbore: ORIGINAL HOLE
PBMD: 7,610.0ft
Btm TMD: 8,676.0ft
Spud Date: 3/19/2005 00:00
BH Coord X: 6,151,592.05uss ft
BH Coord Y: 2,285,102.97uss ft

Casing Shoes (ft)	Schematic (8/11/2009)	Openings Top/Btm/Type/Status

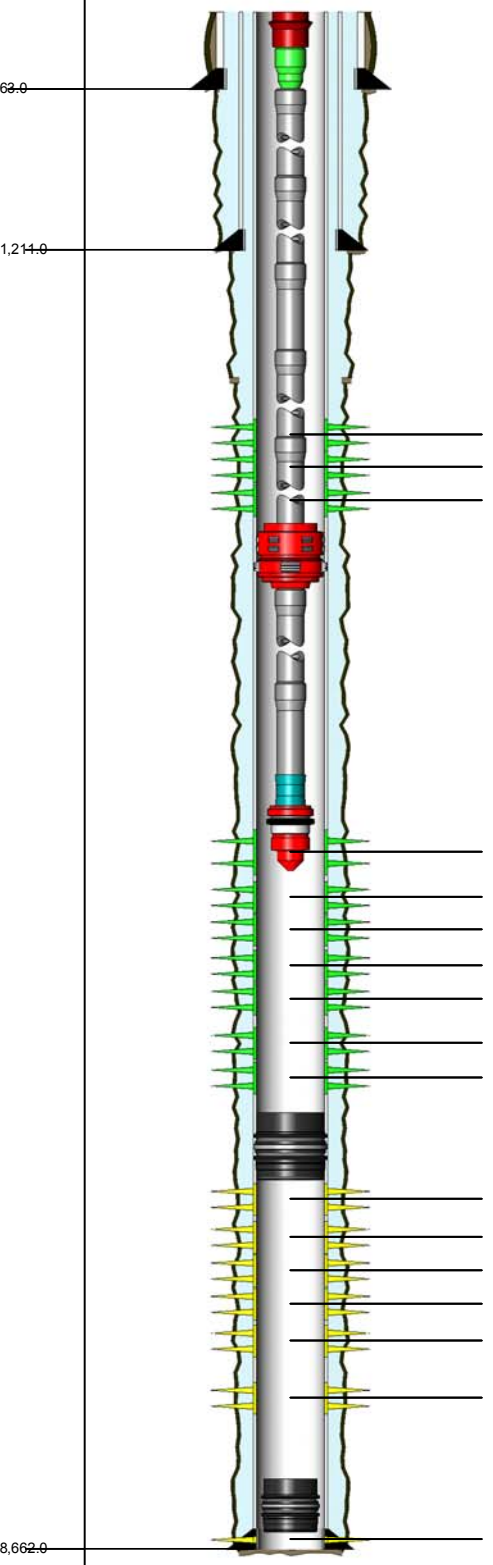

6,690.0ft, 6,704.0ft, PERFORATED, OPEN
6,718.0ft, 6,780.0ft, PERFORATED, OPEN
6,824.0ft, 6,858.0ft, PERFORATED, OPEN
7,290.0ft, 7,326.0ft, PERFORATED, OPEN
7,368.0ft, 7,380.0ft, PERFORATED, OPEN
7,384.0ft, 7,396.0ft, PERFORATED, OPEN
7,418.0ft, 7,423.0ft, PERFORATED, OPEN
7,432.0ft, 7,442.0ft, PERFORATED, OPEN
7,503.0ft, 7,520.0ft, PERFORATED, OPEN
7,532.0ft, 7,540.0ft, PERFORATED, OPEN
7,680.0ft, 7,700.0ft, PERFORATED, ISOLATED
7,815.0ft, 7,910.0ft, PERFORATED, ISOLATED
7,938.0ft, 7,950.0ft, PERFORATED, ISOLATED
7,975.0ft, 8,020.0ft, PERFORATED, ISOLATED
8,094.0ft, 8,140.0ft, PERFORATED, ISOLATED
8,480.0ft, 8,545.0ft, PERFORATED, ISOLATED
8,610.0ft, 8,636.0ft, PERFORATED, ISOLATED

ROD STRING Report Date: 3/14/2007 00:00

Component	Top MD (ft)	Btm MD (ft)
POLROD	0.0	36.0
PNYROD	36.0	62.0
ROD	62.0	2,462.0
ROD	2,462.0	5,252.0
R-4PER	5,252.0	5,852.0
R-6PER	5,852.0	7,232.0
INSPMP	7,232.0	7,258.0

TUBING STRING Report Date: 3/13/2007 00:00

Component	Top MD (ft)	Btm MD (ft)
TH-DBB	23.0	23.7
FATNIP	23.7	24.4
CAS	24.4	6,998.5
AC	6,998.5	7,000.8
CAS	7,000.8	7,276.2
STNIP	7,276.2	7,277.2
GASANC	7,277.2	7,301.0
BULPLG	7,301.0	7,301.2

PLUG BACK Report Date: 2/28/2007 00:00

Component	Top MD (ft)	Btm MD (ft)
BP-DR	7,610.0	7,612.5

PLUG BACK Report Date: 7/20/2005 00:00

Component	Top MD (ft)	Btm MD (ft)
BP-DR	8,589.0	8,591.5

CONDUCTOR CASING Report Date: 3/15/2005 00:00

Item	OD (in)	Grade	Wt. (ppf)	TopMD (ft)	BtmMD (ft)
CASING JOINT(S)	14.000			23.0	63.0

SURFACE CASING Report Date: 3/21/2005 00:00

Item	OD (in)	Grade	Wt. (ppf)	TopMD (ft)	BtmMD (ft)
CASING JOINT(S)	9.625	K-55	36.00	23.0	1,169.3
FLOAT COLLAR	9.625	K-55	36.00	1,169.3	1,169.4
CASING JOINT(S)	9.625	K-55	36.00	1,169.4	1,210.1
FLOAT SHOE	9.625	K-55	36.00	1,210.1	1,211.0

PRODUCTION CASING Report Date: 4/3/2005 00:00

Item	OD (in)	Grade	Wt. (ppf)	TopMD (ft)	BtmMD (ft)
CASING JOINT(S)	7.000	K-55	23.00	23.0	5,032.4
CASING JOINT(S)	7.000	N-80	26.00	5,032.4	6,169.4
FLAG JOINT	7.000	N-80	26.00	6,169.4	6,189.4
CASING JOINT(S)	7.000	N-80	26.00	6,189.4	8,571.4
FLOAT COLLAR	7.000	N-80	26.00	8,571.4	8,572.3
CASING JOINT(S)	7.000	N-80	26.00	8,572.3	8,660.8
FLOAT SHOE	7.000	N-80	26.00	8,660.8	8,662.0

Well: 341H-2G S/T/R: 2G/31S/24E

CASING CEMENT DETAIL
- - -
Sfc Csg. Cmt Vol.: 694 sxs
Hole Size: 12.25"
Top Job: No
Rtns to Sfc: 140 cf
TOC: Sfc
- - -

Interm Csg. Cmt Vol.:
Hole Size:
Top Job:
Rtns to Sfc:
TOC:
- - -

Prod. Csg. Cmt Vol.: 1620 cf
Hole Size: 8.75"
Top Job: No
Rtns to Sfc: 168 cf
TOC: Sfc
- - -

Liner Cmt Vol.:
Hole Size:
Top Job:
Rtns to Sfc:
TTOC:
- - -
Top of Formation:
UBA: 8457'
BLW: N/A

Volume Behind Pipe:
1.3 Yield Assumed
Theoretical Calculations (TTOC)

OCCIDENTAL OF ELK HILLS INC

342-2G

Event: WELL MAINT - RIG
Event End: 10/4/2008 00:00
Sec. Reason:
End Status: FINISHED - SUCCESS
Well Classification: DEVELOPMENT

Ground Level: 882.5ft
Datum: ORIGINAL KB @ 891.51ft (default)
API No.: 0402927982

Wellbore: ORIGINAL HOLE
PBMD: 7,140.0ft
Btm TMD: 7,959.0ft
Spud Date: 8/1/1949 00:00
BH Coord X: 6,153,068.19uss ft
BH Coord Y: 2,285,612.93uss ft

Casing Shoes (ft) | Schematic (10/1/2008) | Openings Top/Btm/Type/Status

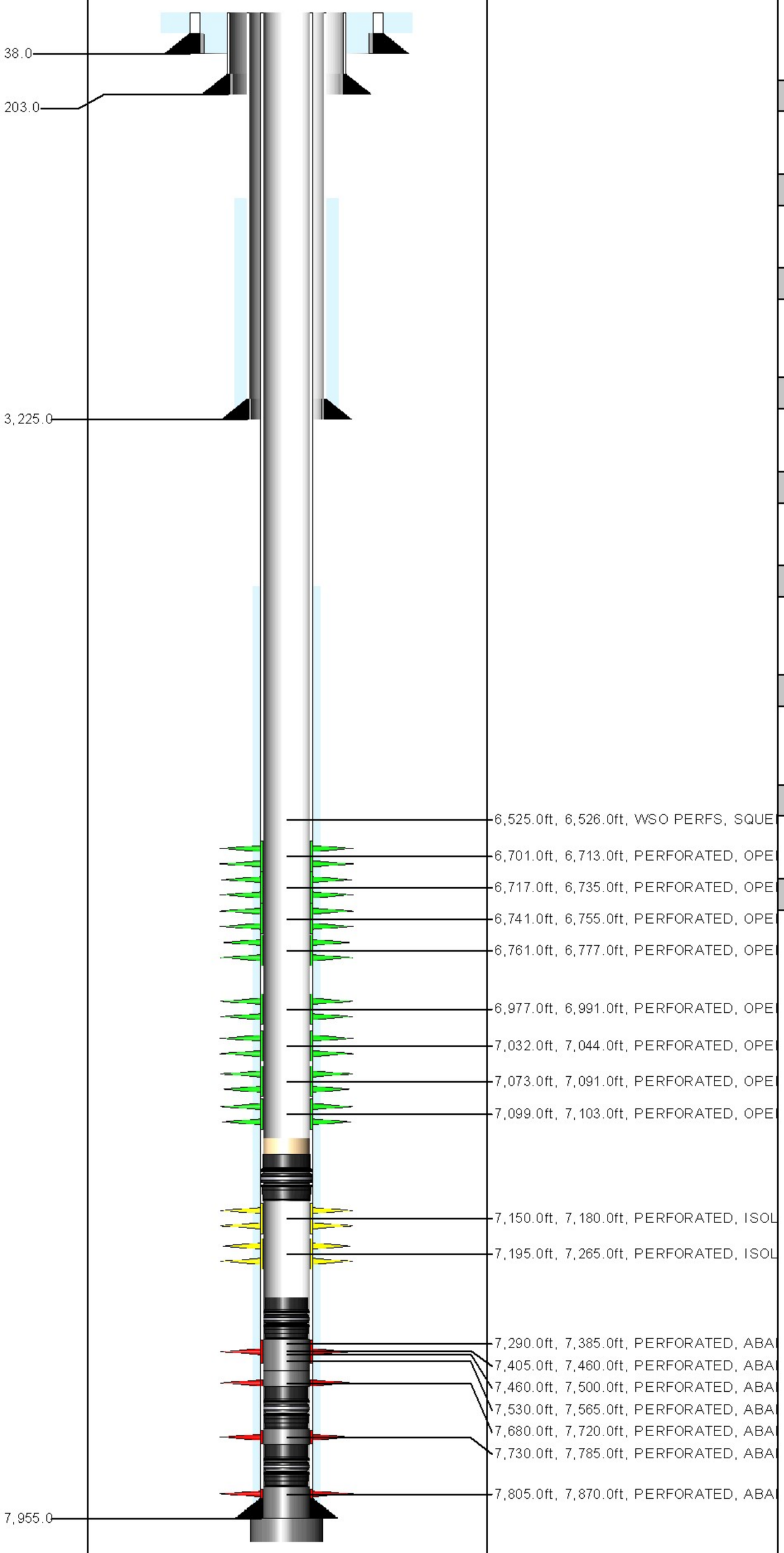

ESP ASSEMBLY Report Date: 5/16/2008 00:00

Component	Top MD (ft)	Btm MD (ft)
TH	9.0	9.6
PUPJNT	9.6	11.6
TBGJNT	11.6	6,578.7
ESPPMP	6,578.7	6,587.0
ESPPMP	6,587.0	6,596.1
ESPINT	6,596.1	6,599.7
ESPPRT	6,599.7	6,607.9
ESPMTR	6,607.9	6,631.7
ESPSEN	6,631.7	6,633.6
XO	6,633.6	6,634.3
ACH	6,634.3	6,665.7
BULPLG	6,665.7	6,666.2

PLUG BACK Report Date: 4/19/2003 00:00

Component	Top MD (ft)	Btm MD (ft)
SAND	7,135.0	7,140.0

PLUG BACK Report Date: 4/17/2003 00:00

Component	Top MD (ft)	Btm MD (ft)
BP-RET	7,140.0	7,144.5

PLUG BACK Report Date: 8/6/1989 00:00

Component	Top MD (ft)	Btm MD (ft)
CR-PRM	7,282.0	7,284.0
CEMENT	7,284.0	7,502.0

PLUG BACK Report Date: 1/3/1950 00:00

Component	Top MD (ft)	Btm MD (ft)
CEMENT	7,502.0	7,627.0

PLUG BACK Report Date: 12/27/1949 00:00

Component	Top MD (ft)	Btm MD (ft)
CEMENT	7,627.0	7,722.0

PLUG BACK Report Date: 12/24/1949 00:00

Component	Top MD (ft)	Btm MD (ft)
CR-PRM	7,722.0	7,724.0
CEMENT	7,724.0	7,789.0

PLUG BACK Report Date: 12/19/1949 00:00

Component	Top MD (ft)	Btm MD (ft)
CR-PRM	7,789.0	7,791.0
CEMENT	7,791.0	7,900.0

PLUG BACK Report Date: 12/17/1949 00:00

Component	Top MD (ft)	Btm MD (ft)
CEMENT	7,900.0	7,955.0

PLUG BACK Report Date: 12/14/1949 00:00

Component	Top MD (ft)	Btm MD (ft)
CEMENT	7,955.0	7,959.0

CONDUCTOR CASING Report Date: 8/1/1949 00:00

Item	OD (in)	Grade	Wt. (ppf)	TopMD (ft)	BtmMD (ft)
CASING JOINT(S)	26.000			9.0	38.0

SURFACE CASING Report Date: 10/13/1949 00:00

Item	OD (in)	Grade	Wt. (ppf)	TopMD (ft)	BtmMD (ft)
CASING JOINT(S)	16.000	H-40	65.00	9.0	203.0

INTERMEDIATE CASING Report Date: 10/19/1949 00:00

Item	OD (in)	Grade	Wt. (ppf)	TopMD (ft)	BtmMD (ft)
CASING JOINT(S)	10.750	J-55	45.50	9.0	75.0
CASING JOINT(S)	10.750	J-55	40.50	75.0	1,923.0
CASING JOINT(S)	10.750	J-55	45.50	1,923.0	3,225.0

PRODUCTION CASING Report Date: 12/14/1949 00:00

Item	OD (in)	Grade	Wt. (ppf)	TopMD (ft)	BtmMD (ft)
CASING JOINT(S)	7.000	N-80	26.00	9.0	63.0
CASING JOINT(S)	7.000	N-80	23.00	63.0	5,849.0
CASING JOINT(S)	7.000	N-80	26.00	5,849.0	7,955.0

Well: 342-2G S/T/R: 2G/31S/24E

CASING CEMENT DETAIL
- - -
Sfc Csg. Cmt Vol.: 400 sx
Hole Size: 22"
Top Job: No
Rtns to Sfc: Good
TOC: Sfc
- - -

Interm Csg. Cmt Vol.: 600 sx
Hole Size: 15"
Top Job: No
Rtns to Sfc:
TTOC: 1400'
- - -

Prod. Csg. Cmt Vol.: 650 sx
Hole Size: 9.625"
Top Job: No
Rtns to Sfc:
TTOC: 4600'
- - -

Liner Cmt Vol.:
Hole Size:
Top Job:
Rtns to Sfc:
TTOC:
- - -
Top of Formation:
UBA: 7290'
BLW: 7899'

Volume Behind Pipe:
1.3 Yield Assumed
Theoretical Calculations (TTOC)

Event: WELL ENHANCEMENT
Event End: 10/1/2005 00:00
Sec. Reason:
End Status:
Well Classification: INJECTION

OCCIDENTAL OF ELK HILLS INC

342-34S

Ground Level: 778.0ft
Datum: ORIGINAL KB @ 798.00ft (HES CTU)(default)
API No.: 0402961995

Wellbore: ST1
PBMD: 7,928.0ft
Btm TMD: 8,000.0ft
Spud Date: 8/1/1980 00:00
BH Coord X: 6,147,710.20uss ft
BH Coord Y: 2,290,554.60uss ft

Casing Shoes (ft)	Schematic (11/1/2005)	Openings Top/Btm/Type/Status

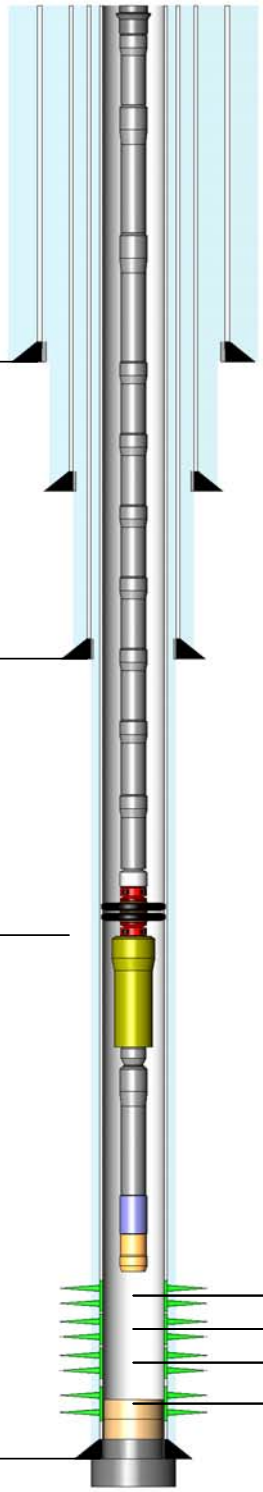

60.0
3,303.0
361.9
7,990.0

7,586.0ft, 7,632.0ft, PERFORATED, OPE
7,662.0ft, 7,692.0ft, PERFORATED, OPE
7,722.0ft, 7,822.0ft, PERFORATED, OPE
7,858.0ft, 7,917.0ft, PERFORATED, OPE

TUBING STRING Report Date: 8/14/1991 00:00

Component	Top MD (ft)	Btm MD (ft)
TH-SGL	20.0	20.6
TBGJNT	20.6	25.0
TBGJNT	25.0	35.2
TBGJNT	35.2	45.3
TBGJNT	45.3	6,234.6
TBGJNT	6,234.6	7,460.2
LOCSUB	7,460.2	7,460.6
PKR-S	7,460.6	7,463.6
PUPJNT	7,463.6	7,467.8
XO	7,467.8	7,468.4
TBGJNT	7,468.4	7,478.6
NOGO-O	7,478.6	7,479.8
WLREG	7,479.8	7,480.2

PLUG BACK Report Date: 3/8/2004 00:00

Component	Top MD (ft)	Btm MD (ft)
FILL	7,911.0	7,916.0

PLUG BACK Report Date: 4/28/2003 00:00

Component	Top MD (ft)	Btm MD (ft)
FILL	7,916.0	7,928.0

PLUG BACK Report Date: 2/26/1981 00:00

Component	Top MD (ft)	Btm MD (ft)
CEMENT	7,928.0	7,990.0

PLUG BACK Report Date: 9/17/1980 00:00

Component	Top MD (ft)	Btm MD (ft)
CEMENT	7,990.0	8,000.0

CONDUCTOR CASING Report Date: 8/18/1980 00:00

Item	OD (in)	Grade	Wt. (ppf)	TopMD (ft)	BtmMD (ft)
CASING JOINT(S)	20.000			20.0	60.0

SURFACE CASING Report Date: 8/22/1980 00:00

Item	OD (in)	Grade	Wt. (ppf)	TopMD (ft)	BtmMD (ft)
CASING JOINT(S)	13.375	K-55	54.50	20.0	274.1
FLOAT COLLAR	13.375	K-55	54.50	274.1	274.2
CASING JOINT(S)	13.375	K-55	54.50	274.2	317.0
FLOAT SHOE	13.375	K-55	54.50	317.0	318.0

INTERMEDIATE CASING Report Date: 8/27/1980 00:00

Item	OD (in)	Grade	Wt. (ppf)	TopMD (ft)	BtmMD (ft)
CASING JOINT(S)	9.625	K-55	40.00	20.0	3,263.0
FLOAT COLLAR	9.625	K-55	40.00	3,263.0	3,263.0
CASING JOINT(S)	9.625	K-55	40.00	3,263.0	3,301.8
FLOAT SHOE	9.625	K-55	40.00	3,301.8	3,303.0

PRODUCTION CASING Report Date: 9/17/1980 00:00

Item	OD (in)	Grade	Wt. (ppf)	TopMD (ft)	BtmMD (ft)
CASING JOINT(S)	7.000	K-55	23.00	20.0	5,319.4
CASING JOINT(S)	7.000	K-55	26.00	5,319.4	6,745.6
FLAG JOINT	7.000	K-55	26.00	6,745.6	6,769.8
CASING JOINT(S)	7.000	K-55	26.00	6,769.8	7,023.5
CASING JOINT(S)	7.000	N-80	29.00	7,023.5	7,943.3
FLOAT COLLAR	7.000	N-80	29.00	7,943.3	7,945.2
CASING JOINT(S)	7.000	N-80	29.00	7,945.2	7,987.8
FLOAT SHOE	7.000	N-80	29.00	7,987.8	7,990.0

Well: 342-34S S/T/R: 34S/30S/24E

CASING CEMENT DETAIL
- - -
Sfc Csg. Cmt Vol.: 450 cf
Hole Size: 17.5"
Top Job: no
Rtns to Sfc: trace
TOC: sfc
- - -

Interm Csg. Cmt Vol.: 1673 cf
Hole Size: 12.25"
Top Job: no
Rtns to Sfc: 40 cf
TOC: sfc
- - -

Prod. Csg. Cmt Vol.: 1900 cf
Hole Size: 8.75"
Top Job:no
Rtns to Sfc: no
TTOC: sfc
- - -

Liner Cmt Vol.:
Hole Size:
Top Job:
Rtns to Sfc :
TTOC:
- - -
Top of Formation:
UBA: 7578'
BLW: 7953'

Volume Behind Pipe:
1.3 Yield Assumed
Theoretical Calculations (TTOC)

OCCIDENTAL OF ELK HILLS INC

342-35S

Event: WELL MAINT - RIGLESS
Event End:
Sec. Reason:
End Status: FINISHED - SUCCESS
Well Classification: DEVELOPMENT

Ground Level: 626.0ft
Datum: ORIGINAL KB @ 646.00ft (default)
API No.: 0402961922

Wellbore: ST1
PBMD: 6,730.0ft
Btm TMD: 7,925.0ft
Spud Date: 7/1/1980 00:00
BH Coord X: 6,153,105.99uss ft
BH Coord Y: 2,290,707.24uss ft

Casing Shoes (ft)

Schematic (8/11/2009)

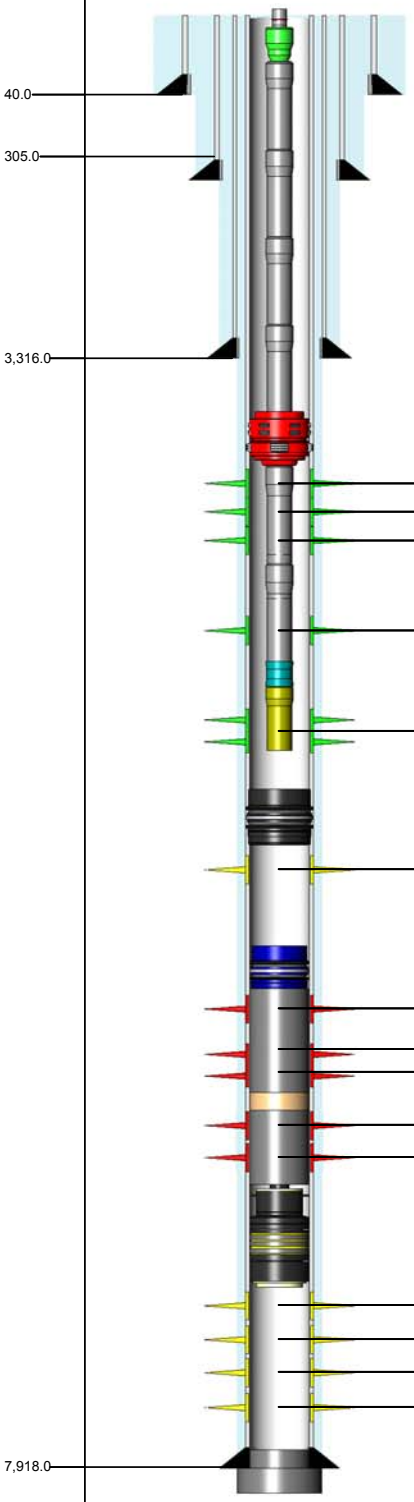

Openings Top/Btm/Type/Status

6,622.0ft, 6,627.0ft, PERFORATED, OPEN
6,636.0ft, 6,641.0ft, PERFORATED, OPEN
6,672.0ft, 6,680.0ft, PERFORATED, OPEN
6,694.0ft, 6,702.0ft, PERFORATED, OPEN
6,708.0ft, 6,713.0ft, PERFORATED, OPEN
6,753.0ft, 6,850.0ft, PERFORATED, ISOLATE
6,880.0ft, 6,968.0ft, PERFORATED, ABANDO
7,002.0ft, 7,078.0ft, PERFORATED, ABANDO
7,108.0ft, 7,170.0ft, PERFORATED, ABANDO
7,205.0ft, 7,295.0ft, PERFORATED, ABANDO
7,322.0ft, 7,356.0ft, PERFORATED, ABANDO
7,450.0ft, 7,520.0ft, PERFORATED, ISOLATE
7,560.0ft, 7,634.0ft, PERFORATED, ISOLATE
7,658.0ft, 7,718.0ft, PERFORATED, ISOLATE
7,740.0ft, 7,770.0ft, PERFORATED, ISOLATE

ROD STRING Report Date: 6/25/2004 00:00

Component	Top MD (ft)	Btm MD (ft)
POLROD		
PNYROD	46.0	52.0
ROD	52.0	2,332.0
R-4PER	2,332.0	3,082.0
ROD	3,082.0	6,682.0
INSPMP	6,682.0	

TUBING STRING Report Date: 6/25/2004 00:00

Component	Top MD (ft)	Btm MD (ft)
TH-DBB	20.0	20.6
FATNIP	20.6	21.3
TBGJNT	21.3	6,384.9
AC	6,384.9	6,387.2
TBGJNT	6,387.2	6,704.9
STNIP	6,704.9	6,705.9
PUPJNT	6,705.9	6,711.9

PACKER ASSEMBLY (RETRIEVABLE) Report Date: 6/23/2004 00:00

Component	Top MD (ft)	Btm MD (ft)
BP-RET	6,730.0	6,732.3

PLUG BACK Report Date: 7/23/2002 00:00

Component	Top MD (ft)	Btm MD (ft)
CR-RET	6,870.0	6,876.8

PLUG BACK Report Date: 2/4/2003 00:00

Component	Top MD (ft)	Btm MD (ft)
CEMENT	6,876.0	7,172.0

PLUG BACK Report Date: 5/30/2002 00:00

Component	Top MD (ft)	Btm MD (ft)
FILL	7,172.0	7,190.0

PLUG BACK Report Date: 2/4/1985 00:00

Component	Top MD (ft)	Btm MD (ft)
CEMENT	7,190.0	7,410.0

PLUG BACK Report Date: 7/23/1984 00:00

Component	Top MD (ft)	Btm MD (ft)
BP-PRM	7,410.0	7,412.2

PLUG BACK Report Date: 9/4/1981 00:00

Component	Top MD (ft)	Btm MD (ft)
CEMENT	7,832.0	7,918.0

PLUG BACK Report Date: 8/23/1980 00:00

Component	Top MD (ft)	Btm MD (ft)
CEMENT	7,918.0	7,925.0

CONDUCTOR CASING Report Date: 7/17/1980 00:00

Item	OD (in)	Grade	Wt. (ppf)	TopMD (ft)	BtmMD (ft)
CASING JOINT(S)	20.000			20.0	40.0

SURFACE CASING Report Date: 7/18/1980 00:00

Item	OD (in)	Grade	Wt. (ppf)	TopMD (ft)	BtmMD (ft)
CASING JOINT(S)	13.375	K-55	68.00	20.0	314.0
GUIDE SHOE	13.375			314.0	315.0

INTERMEDIATE CASING Report Date: 7/22/1980 00:00

Item	OD (in)	Grade	Wt. (ppf)	TopMD (ft)	BtmMD (ft)
CASING JOINT(S)	9.625	K-55	40.00	20.0	3,315.0
GUIDE SHOE	9.625			3,315.0	3,316.0

PRODUCTION CASING Report Date: 8/23/1980 00:00

Item	OD (in)	Grade	Wt. (ppf)	TopMD (ft)	BtmMD (ft)
CASING JOINT(S)	7.000	N-80	29.00	20.0	81.3
CASING JOINT(S)	7.000	K-55	23.00	81.3	5,264.8
CASING JOINT(S)	7.000	K-55	26.00	5,264.8	6,990.0
FLAG JOINT	7.000	K-55	26.00	6,990.0	7,008.8
CASING JOINT(S)	7.000	K-55	26.00	7,008.8	7,178.9
CASING JOINT(S)	7.000	N-80	29.00	7,178.9	7,872.4
FLOAT COLLAR	7.000	N-80	29.00	7,872.4	7,874.1
CASING JOINT(S)	7.000	N-80	29.00	7,874.1	7,915.9
FLOAT SHOE	7.000		26.00	7,915.9	7,918.0

Well: 342-35S S/T/R: 35S/30S/24E

CASING CEMENT DETAIL
- - -
Sfc Csg. Cmt Vol.: 354cuft
Hole Size: 17.5"
Top Job: No
Rtns to Sfc: 15cuft
TOC: sfc
- - -

Interm Csg. Cmt Vol.: 1600cuft
Hole Size: 12.250"
Top Job: No
Rtns to Sfc: 35cuft
TOC: sfc
- - -

Prod. Csg. Cmt Vol.: 2300cuft
Hole Size: 8.750"
Top Job: No
Rtns to Sfc: No returns
TTOC: sfc
- - -

Liner Cmt Vol.:
Hole Size:
Top Job:
Rtns to Sfc :
TTOC:
- - -
Top of Formation:
UBA: 7375'
BLW: 7771'

Volume Behind Pipe:
1.3 Yield Assumed
Theoretical Calculations (TTOC)

OCCIDENTAL OF ELK HILLS INC

342-3G

Event: WELL MAINT - RIG
Event End: 11/10/2007 00:00
Sec. Reason: LOW PRODUCTION

Ground Level: 1,031.0ft
Datum: ORIGINAL KB @ 1,041.00ft (default)
API No.: 0402929021

Wellbore: ORIGINAL HOLE
PBMD: 6,487.0ft
Btm TMD: 7,636.0ft
Spud Date: 5/17/1949 00:00
BH Coord X: 6,147,708.71uss ft
BH Coord Y: 2,285,619.33uss ft

Casing Shoes (ft) | Schematic (12/1/2007) | Openings Top/Btm/Type/Status

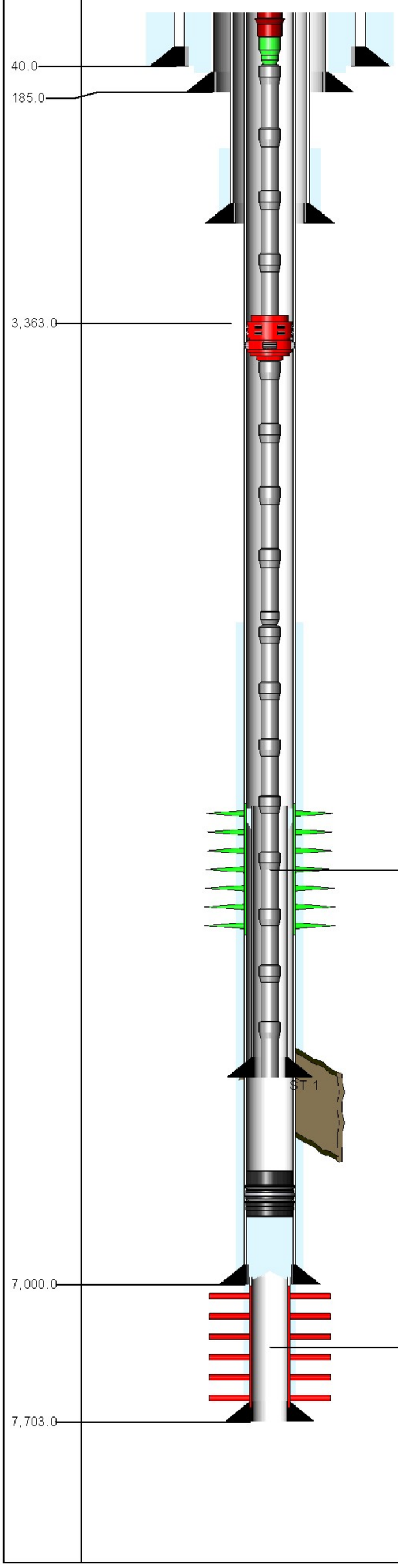

6,175.0ft, 6,195.0ft, PERFORATED, OPEN
6,175.0ft, 6,195.0ft, PERFORATED, OPEN
7,007.0ft, 7,633.0ft, SLOTTED, ABANDONED

ROD STRING Report Date: 11/10/2007 00:00

Component	Top MD (ft)	Btm MD (ft)
POLROD	0.0	30.0
PNYROD	30.0	42.0
ROD	42.0	582.0
R-4PER	582.0	1,602.0
ROD	1,602.0	4,062.0
ROD	4,062.0	6,822.0
RSTBAR	6,822.0	6,826.0
INSPMP	6,826.0	6,850.0

TUBING STRING Report Date: 12/10/2004 00:00

Component	Top MD (ft)	Btm MD (ft)
TH-DBB	10.0	11.0
FATNIP	11.0	11.7
TBGJNT	11.7	5,302.7
AC	5,302.7	5,305.0
TBGJNT	5,305.0	5,399.1
XO	5,399.1	5,400.3
TBGJNT	5,400.3	6,871.3
STNIP	6,871.3	6,872.3
TBGJNT	6,872.3	6,903.3
STCOLL	6,903.3	6,903.7

PLUG BACK Report Date: 5/17/2002 00:00

Component	Top MD (ft)	Btm MD (ft)
CR-PRM	6,653.0	6,656.0

CONDUCTOR CASING Report Date: 5/17/1949 00:00

Item	OD (in)	Grade	Wt. (ppf)	TopMD (ft)	BtmMD (ft)
CASING JOINT(S)	26.000			10.0	40.0

SURFACE CASING Report Date: 6/2/1949 00:00

Item	OD (in)	Grade	Wt. (ppf)	TopMD (ft)	BtmMD (ft)
CASING JOINT(S)	16.000	H-40	65.00	10.0	185.0

INTERMEDIATE CASING Report Date: 6/9/1949 00:00

Item	OD (in)	Grade	Wt. (ppf)	TopMD (ft)	BtmMD (ft)
CASING JOINT(S)	10.750	J-55	45.50	10.0	72.0
CASING JOINT(S)	10.750	J-55	40.50	72.0	2,202.0
CASING JOINT(S)	10.750	J-55	45.50	2,202.0	3,353.0

PRODUCTION CASING Report Date: 7/10/1949 00:00

Item	OD (in)	Grade	Wt. (ppf)	TopMD (ft)	BtmMD (ft)
CASING JOINT(S)	7.000	N-80	26.00	10.0	75.8
CASING JOINT(S)	7.000	N-80	23.00	75.8	5,287.7
CASING JOINT(S)	7.000	N-80	26.00	5,287.7	7,000.0

LINER Report Date: 7/31/1949 00:00

Item	OD (in)	Grade	Wt. (ppf)	TopMD (ft)	BtmMD (ft)
CASING JOINT(S)	5.500	J-55	17.00	6,961.0	7,077.0
SLOTTED LINER	5.500		17.00	7,077.0	7,703.0

LINER Report Date: 7/19/2002 00:00

Item	OD (in)	Grade	Wt. (ppf)	TopMD (ft)	BtmMD (ft)
LINER HANGER PACKER	5.000			6,181.7	6,194.6
PROFILE NIPPLE (OPEN)	5.000			6,194.6	6,197.4
LINER HANGER	5.000			6,197.4	6,204.0
CROSSOVER	5.000	P-110		6,204.0	6,204.8
CASING JOINT(S)	4.500	P-110	11.60	6,204.8	7,633.6
LANDING COLLAR	4.500	P-110	11.60	7,633.6	7,635.2
CASING JOINT(S)	4.500	P-110	11.60	7,635.2	7,673.3
FLOAT COLLAR	4.500	P-110	11.60	7,673.3	7,674.4
CASING JOINT(S)	4.500	P-110	11.60	7,674.4	7,713.1
FLOAT SHOE	4.500	P-110	11.60	7,713.1	7,715.0

Well: 342-3G S/T/R: 3G/31S/24E
Status: P&A May-2002
SQZ LINER USING RETAINER
FROM 6653' - 6656'. WINDOW MILLED IN
7" CASING FROM 6470' - 6475'

CASING CEMENT DETAIL
- - -
Sfc Csg. Cmt Vol.: 520 cf (calc from 400 sx)
Hole Size: 22
Top Job: no
Rtns to Sfc: not recorded
TTOC: sfc
- - -

Interm Csg. Cmt Vol.: 1393 cf (calc from 900 sx)
Hole Size: 15
Top Job: no
Rtns to Sfc: not recorded
TOC: 1760' Thermo Survey
- - -

Prod. Csg. Cmt Vol.: 520 cf (400sx)
Hole Size: 9-5/8"
2 top rubber plugs and 1 bottom rubber plug - good circ during job.
Rtns to Sfc: no
TOC: 5400' Thermo Survey

Liner Cmt Vol.: Hung in 7" csg. - slotted liner
Hole Size: 6-1/8"
Top Job:
Rtns to Sfc:
TOC:
- - -
Top of Formation:
UBA: 7070'
BLW: N/A

Volume Behind Pipe:
1.3 Yield Assumed
Theoretical Calculations (TTOC)

OCCIDENTAL OF ELK HILLS INC

342-3G-RD1

Event: WELL MAINT - RIG
Event End: 11/10/2007 00:00
Sec. Reason: LOW PRODUCTION

Ground Elev: 1,031.0ft
KB to Ground: 6,490.0ft
Datum: ORIGINAL KB @ 1,041.00ft (default)
API No.: 0402929021

Wellbore: ST 1
Top TMD: 6,490.0ft
PBMD: 6,939.0ft
Btm TMD: 7,720.0ft
Spud Date: 5/17/1949 00:00
BH X: 6,147,686.74uss ft BH Y: 2,285,900.02uss ft

Casing Shoes (ft) | Schematic (12/1/2007) | Openings Top/Btm/Type/Status

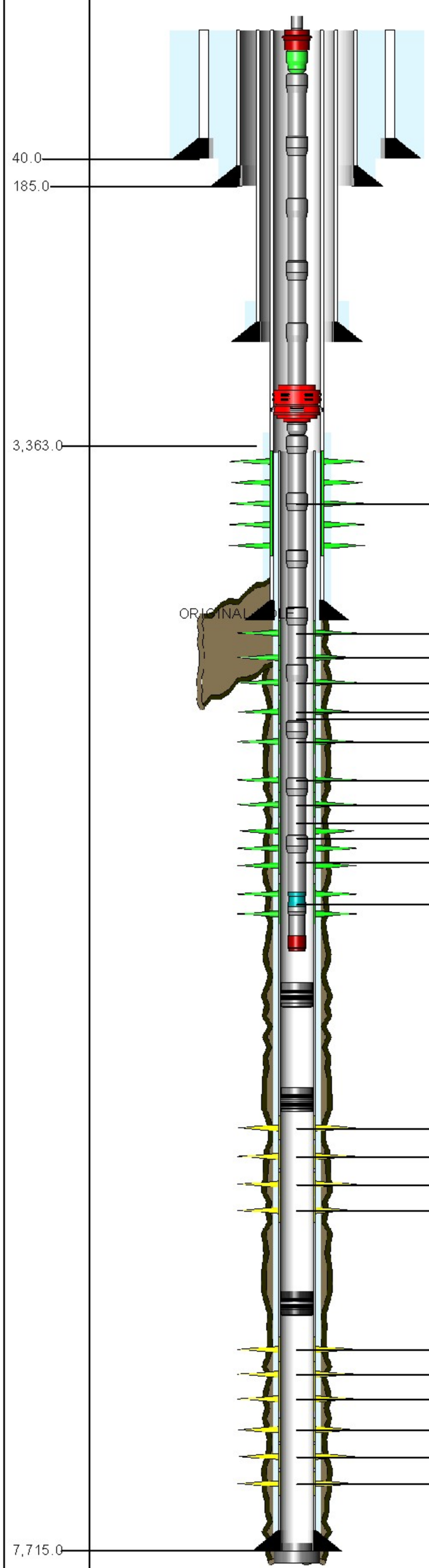

6,175.0ft, 6,195.0ft, PERFORATED, OPEN
6,175.0ft, 6,195.0ft, PERFORATED, OPEN
6,510.0ft, 6,525.0ft, PERFORATED, OPEN
6,529.0ft, 6,532.0ft, PERFORATED, OPEN
6,536.0ft, 6,539.0ft, PERFORATED, OPEN
6,544.0ft, 6,548.0ft, PERFORATED, OPEN
6,535.0ft, 6,565.0ft, PERFORATED, OPEN
6,553.0ft, 6,559.0ft, PERFORATED, OPEN
6,574.0ft, 6,576.0ft, PERFORATED, OPEN
6,586.0ft, 6,590.0ft, PERFORATED, OPEN
6,817.0ft, 6,822.0ft, PERFORATED, OPEN
6,827.0ft, 6,840.0ft, PERFORATED, OPEN
6,852.0ft, 6,855.0ft, PERFORATED, OPEN
6,864.0ft, 6,891.0ft, PERFORATED, OPEN
6,959.0ft, 6,968.0ft, PERFORATED, ISOLAT
6,988.0ft, 7,000.0ft, PERFORATED, ISOLAT
7,015.0ft, 7,020.0ft, PERFORATED, ISOLAT
7,028.0ft, 7,060.0ft, PERFORATED, ISOLAT
7,422.0ft, 7,440.0ft, PERFORATED, ISOLAT
7,441.0ft, 7,450.0ft, PERFORATED, ISOLAT
7,451.0ft, 7,485.0ft, PERFORATED, ISOLAT
7,501.0ft, 7,508.0ft, PERFORATED, ISOLAT
7,514.0ft, 7,524.0ft, PERFORATED, ISOLAT
7,530.0ft, 7,568.0ft, PERFORATED, ISOLAT

ROD STRING Report Date: 11/10/2007 00:00

Component	Top MD (ft)	Btm MD (ft)
POLROD	0.0	30.0
PNYROD	30.0	42.0
ROD	42.0	582.0
R-4PER	582.0	1,602.0
ROD	1,602.0	4,062.0
ROD	4,062.0	6,822.0
RSTBAR	6,822.0	6,826.0
INSPMP	6,826.0	6,850.0

TUBING STRING Report Date: 12/10/2004 00:00

Component	Top MD (ft)	Btm MD (ft)
TH-DBB	10.0	11.0
FATNIP	11.0	11.7
TBGJNT	11.7	5,302.7
AC	5,302.7	5,305.0
TBGJNT	5,305.0	5,399.1
XO	5,399.1	5,400.3
TBGJNT	5,400.3	6,871.3
STNIP	6,871.3	6,872.3
TBGJNT	6,872.3	6,903.3
STCOLL	6,903.3	6,903.7

PLUG BACK Report Date: 11/4/2004 00:00

Component	Top MD (ft)	Btm MD (ft)
CR-DRL	6,937.0	6,939.1

PLUG BACK Report Date: 11/4/2004 00:00

Component	Top MD (ft)	Btm MD (ft)
CR-DRL	6,940.0	6,942.1

PLUG BACK Report Date: 9/15/2003 00:00

Component	Top MD (ft)	Btm MD (ft)
BP-RET	7,340.0	7,343.0

PLUG BACK Report Date: 8/3/2002 00:00

Component	Top MD (ft)	Btm MD (ft)
CEMENT	7,634.0	7,715.0

PLUG BACK Report Date: 7/20/2002 00:00

Component	Top MD (ft)	Btm MD (ft)
CEMENT	7,715.0	7,720.0

Wellbore No.: 01

CONDUCTOR CASING Report Date: 5/17/1949 00:00

Component Name	OD (in)	Grade	Wt (ppf)	Top MD (ft)	Btm MD (ft)
CASING JOINT(S)	26.000			10.0	40.0

SURFACE CASING Report Date: 6/2/1949 00:00

Component Name	OD (in)	Grade	Wt (ppf)	Top MD (ft)	Btm MD (ft)
CASING JOINT(S)	16.000	H-40	65.00	10.0	185.0

INTERMEDIATE CASING Report Date: 6/9/1949 00:00

Component Name	OD (in)	Grade	Wt (ppf)	Top MD (ft)	Btm MD (ft)
CASING JOINT(S)	10.750	J-55	45.50	10.0	72.0
CASING JOINT(S)	10.750	J-55	40.50	72.0	2,202.0
CASING JOINT(S)	10.750	J-55	45.50	2,202.0	3,353.0

PRODUCTION CASING Report Date: 7/10/1949 00:00

Component Name	OD (in)	Grade	Wt (ppf)	Top MD (ft)	Btm MD (ft)
CASING JOINT(S)	7.000	N-80	26.00	10.0	75.8
CASING JOINT(S)	7.000	N-80	23.00	75.8	5,287.7
CASING JOINT(S)	7.000	N-80	26.00	5,287.7	7,000.0

LINER Report Date: 7/19/2002 00:00

Component Name	OD (in)	Grade	Wt (ppf)	Top MD (ft)	Btm MD (ft)
LINER HANGER PACKER	5.000			6,181.7	6,194.6
PROFILE NIPPLE (OPEN)	5.000			6,194.6	6,197.4
LINER HANGER	5.000			6,197.4	6,204.0
CROSSOVER	5.000	P-110		6,204.0	6,204.8
CASING JOINT(S)	4.500	P-110	11.60	6,204.8	7,633.6
LANDING COLLAR	4.500	P-110	11.60	7,633.6	7,635.2
CASING JOINT(S)	4.500	P-110	11.60	7,635.2	7,673.3
FLOAT COLLAR	4.500	P-110	11.60	7,673.3	7,674.4
CASING JOINT(S)	4.500	P-110	11.60	7,674.4	7,713.1
FLOAT SHOE	4.500	P-110	11.60	7,713.1	7,715.0

Wellbore No.: 01

Well: 342-3G-RD1 S/T/R: 3G/31S/24E

CASING CEMENT DETAIL
- - -
Sfc Csg. Cmt Vol.: 520cf (T)
Hole Size: 22'
Top Job:
Rtns to Sfc: not recorded
TTOC: Sfc
- - -

Interm Csg. Cmt Vol.: 1393cf (T)
Hole Size: 15"
Top Job: no
Rtns to Sfc: not recorded
TOC: ~1760' - Thermo Survey
- - -

Prod. Csg. Cmt Vol.: 520cf (T)
Hole Size: 9.625"
2 top rubber plugs & 1 btm plug - good circulation during job.
Rtns to Sfc: No
TTOC: ~5400' Thermo Survey
- - -

RD1
Liner Cmt Vol.: 305cf
Hole Size: 6.125"
Top Job:
Rtns to Sfc:
TOC: TOL
- - -

Top of Formation:
UBA: 7062'
BLW: 7639'

Volume Behind Pipe
1.15 Yield Assumed on Theoretical Calculations (T)

OCCIDENTAL OF ELK HILLS INC

342A-3G

Event: WELL MAINT - RIG
Event End: 8/9/2008 00:00
Sec. Reason: SPLIT

Ground Elev: 1,028.0ft
KB to Ground: 12.0ft
Datum: ORIGINAL KB @ 1,040.00ft (default)
API No.: 0402953754

Wellbore: ORIGINAL HOLE
Top TMD: 12.0ft
PBMD: 5,991.0ft
Btm TMD: 7,650.0ft
Spud Date: 2/18/1976 00:00
BH Coord X: 6,148,528.50uss ft BH Coord Y: 2,286,438.81uss

Casing Shoes (ft) | Schematic (8/9/2008) | Openings Top/Btm/Type/Status

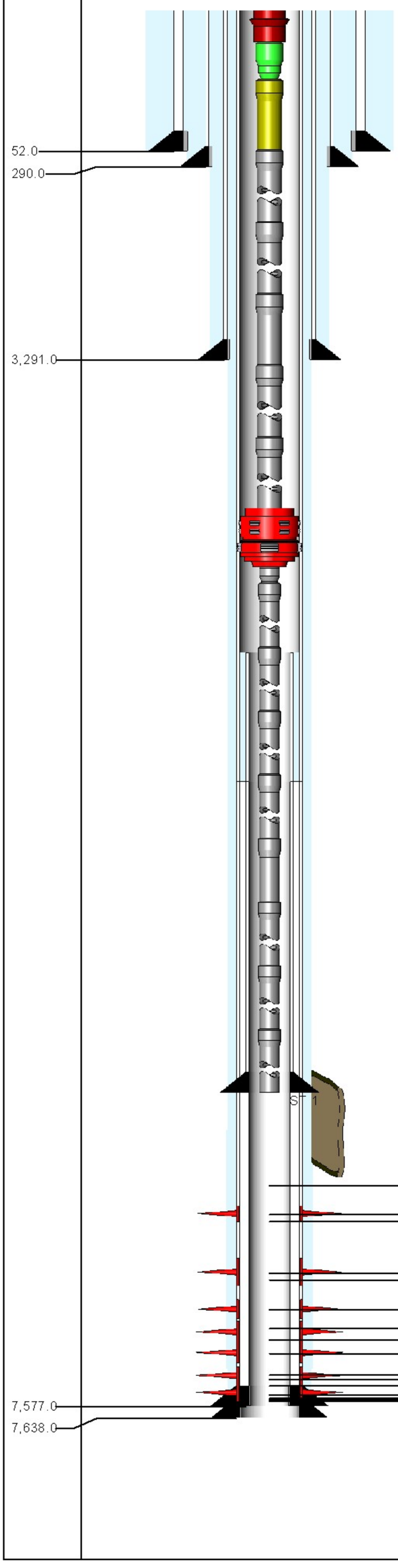

6,570.0ft, 6,645.0ft, PERFORATED, ABAND
6,565.0ft, 6,720.0ft, PERFORATED, ABAND
6,830.0ft, 6,980.0ft, PERFORATED, ABAND
6,905.0ft, 6,970.0ft, PERFORATED, ABAND
7,040.0ft, 7,135.0ft, PERFORATED, ABAND
7,150.0ft, 7,219.0ft, PERFORATED, ABAND
6,460.0ft, 6,461.0ft, WSO PERFS, SQUEEZ
7,235.0ft, 7,245.0ft, PERFORATED, ABAND
7,260.0ft, 7,360.0ft, PERFORATED, ABAND
7,390.0ft, 7,448.0ft, PERFORATED, ABAND
7,380.0ft, 7,500.0ft, PERFORATED, ABAND
7,448.1ft, 7,500.1ft, PERFORATED, ABAND
7,519.0ft, 7,520.0ft, PERFORATED, ABAND
7,520.0ft, 7,553.0ft, PERFORATED, ABAND
7,539.0ft, 7,540.0ft, PERFORATED, ABAND
7,544.0ft, 7,545.0ft, PERFORATED, ABAND
7,549.0ft, 7,550.0ft, PERFORATED, ABAND
7,552.0ft, 7,553.0ft, PERFORATED, ABAND

ROD STRING Report Date: 8/7/2008 00:00

Component	Top MD (ft)	Btm MD (ft)
POLROD	0.0	30.0
PNYROD	30.0	46.0
R-4PER	46.0	1,546.0
ROD	1,546.0	3,556.0
R-4PER	3,556.0	4,306.0
ROD	4,306.0	7,036.0
RSTBAR	7,036.0	7,040.0
INSPMP	7,040.0	7,064.0

TUBING STRING Report Date: 8/6/2008 00:00

Component	Top MD (ft)	Btm MD (ft)
TH-DBB	12.0	12.7
FATNIP	12.7	13.4
PUPJNT	13.4	31.6
CAS	31.6	5,604.7
AC	5,604.7	5,607.0
XO	5,607.0	5,608.1
CAS	5,608.1	7,029.0
PMPSH	7,029.0	7,029.6
PUPJNT	7,029.6	7,039.7
STCOLL	7,039.7	7,040.1

CONDUCTOR CASING Report Date: 2/18/1976 00:00

Item Description	Btm MD(ft)
CASING JOINT(S) 20 in,	52.0

SURFACE CASING Report Date: 11/4/1976 00:00

Item Description	Btm MD (ft)
CASING JOINT(S) 13.375 in, , H-40, 48	290.0

INTERMEDIATE CASING Report Date: 11/10/1976 00:00

Item Description	Btm MD (ft)
CASING JOINT(S) 9.625 in, , K-55, 40	3,291.0

PRODUCTION CASING Report Date: 11/26/1976 00:00

Item Description	Btm MD (ft)
CASING JOINT(S) 7 in, , K-55, 26	73.0
CASING JOINT(S) 7 in, , K-55, 23	5,165.0
CASING JOINT(S) 7 in, , K-55, 26	7,638.0

INNER LINER Report Date: 11/9/1996 00:00

Item Description	Btm MD (ft)
LINER HANGER 7 in, , P-110, 18	6,412.3
CASING JOINT(S) 5 in, , P-110, 18	7,574.1
FLOAT COLLAR 5 in, , P-110, 18	7,576.2
GUIDE SHOE 5 in, , P-110, 18	7,577.0

LINER Report Date: 11/1/2002 00:00

Item Description	Btm MD (ft)
TIE BACK RECEPTACLE 5 in,	5,704.3
SETTING SLEEVE 5 in,	5,711.3
LINER HANGER 5 in,	5,718.4
PBR 5 in,	5,721.4
CROSSOVER 5 in, , N-80	5,722.4
CASING JOINT(S) 5 in, , N-80, 15	7,719.1
LANDING COLLAR 5 in,	7,720.4
CASING JOINT(S) 5 in, , N-80, 15	7,801.3
FLOAT SHOE 5 in,	7,804.0

Well: 342A-3G S/T/R: 3G/31S/24E

CASING CEMENT DETAIL
- - -
Sfc Csg. Cmt Vol.: 150cf
Hole Size: 17.5"
Top Job:
Rtns to Sfc: Yes
TOC: Sfc
- - -

Interm Csg. Cmt Vol.: 1414cf
Hole Size: 12.25"
Top Job:
Rtns to Sfc: No
TTOC: Sfc
- - -

Prod. Csg. Cmt Vol.: 2050cf
Hole Size: 8.75"
Top Job:
Rtns to Sfc: Yes
TOC: Sfc
- - -

Liner Cmt Vol.:
Hole Size:
Top Job:
Rtns to Sfc:
TOC:
- - -

Top of Formation:
UBA: 7124'
BLW: 7615'

Volume Behind Pipe
1.15 Yield Assumed on
Theoretical Calculations (T)

OCCIDENTAL OF ELK HILLS INC

342A-3G-RD1

Event: WELL MAINT - RIG
Event End: 8/9/2008 00:00
Sec. Reason: SPLIT

Ground Elev: 1,028.0ft
KB to Ground: 5,991.0ft
Datum: ORIGINAL KB @ 1,040.00ft (default)
API No.: 0402953754

Wellbore: ST 1
Top TMD: 5,991.0ft
PBMD: 7,010.0ft
Btm TMD: 7,806.0ft
Spud Date: 2/18/1976 00:00
BH Coord X: 6,148,464.51uss ft BH Coord Y: 2,286,595.73uss

Casing Shoes (ft) | Schematic (8/9/2008) | Openings Top/Btm/Type/Status

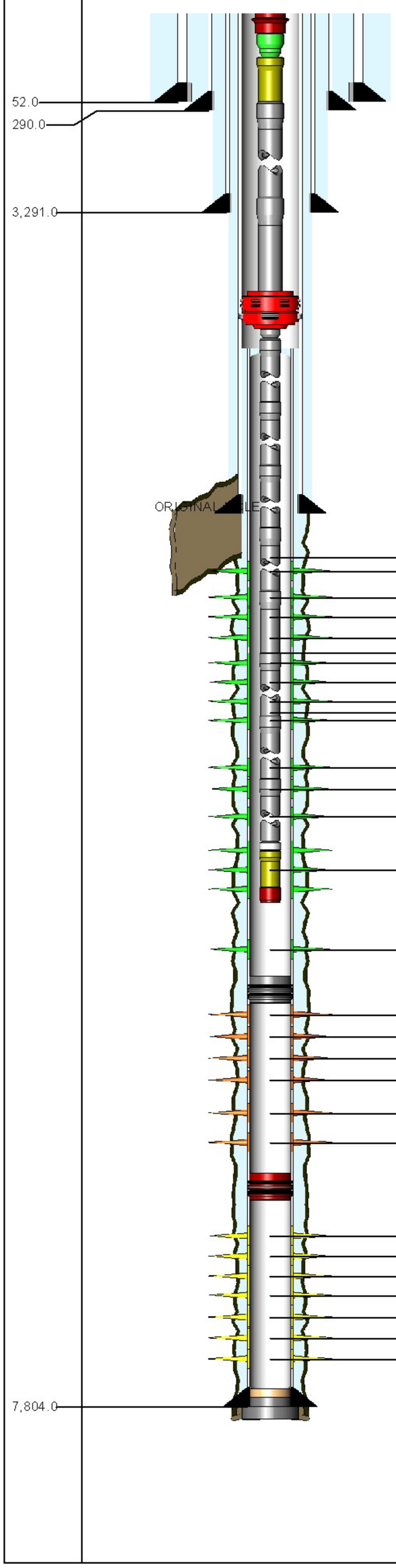

6,380.0ft, 6,381.0ft, SQZ PERFS, SQUEEZE
6,380.0ft, 6,381.0ft, SQZ PERFS, SQUEEZE
6,414.0ft, 6,417.0ft, PERFORATED, OPEN
6,415.0ft, 6,416.0ft, SQZ PERFS, OPEN
6,480.0ft, 6,484.0ft, PERFORATED, OPEN
6,490.0ft, 6,495.0ft, PERFORATED, OPEN
6,508.0ft, 6,527.0ft, PERFORATED, OPEN
6,570.0ft, 6,571.0ft, SQZ PERFS, OPEN
6,570.0ft, 6,571.0ft, SQZ PERFS, OPEN
6,580.0ft, 6,586.0ft, PERFORATED, OPEN
6,586.0ft, 6,606.0ft, PERFORATED, OPEN
6,606.0ft, 6,626.0ft, PERFORATED, OPEN
6,606.0ft, 6,670.0ft, PERFORATED, OPEN
6,626.0ft, 6,646.0ft, PERFORATED, OPEN
6,846.0ft, 6,878.0ft, PERFORATED, OPEN
6,892.0ft, 6,906.0ft, PERFORATED, OPEN
6,950.0ft, 6,978.0ft, PERFORATED, OPEN
7,028.0ft, 7,040.0ft, PERFORATED, OPEN
7,028.0ft, 7,040.0ft, PERFORATED, OPEN
7,068.0ft, 7,077.0ft, PERFORATED, OPEN
7,068.0ft, 7,077.0ft, PERFORATED, OPEN
7,086.0ft, 7,102.0ft, PERFORATED, SQUEE
7,109.0ft, 7,118.0ft, PERFORATED, SQUEE
7,124.0ft, 7,136.0ft, PERFORATED, SQUEE
7,141.0ft, 7,161.0ft, PERFORATED, SQUEE
7,182.0ft, 7,188.0ft, PERFORATED, SQUEE
7,202.0ft, 7,214.0ft, PERFORATED, SQUEE
7,445.0ft, 7,470.0ft, PERFORATED, ISOLAT
7,479.0ft, 7,490.0ft, PERFORATED, ISOLAT
7,495.0ft, 7,515.0ft, PERFORATED, ISOLAT
7,515.0ft, 7,519.0ft, PERFORATED, ISOLAT
7,536.0ft, 7,545.0ft, PERFORATED, ISOLAT
7,554.0ft, 7,560.0ft, PERFORATED, ISOLAT
7,570.0ft, 7,582.0ft, PERFORATED, ISOLAT

ROD STRING Report Date: 8/7/2008 00:00

Component	Top MD (ft)	Btm MD (ft)
POLROD	0.0	30.0
PNYROD	30.0	46.0
R-4PER	46.0	1,546.0
ROD	1,546.0	3,556.0
R-4PER	3,556.0	4,306.0
ROD	4,306.0	7,036.0
RSTBAR	7,036.0	7,040.0
INSPMP	7,040.0	7,064.0

TUBING STRING Report Date: 8/6/2008 00:00

Component	Top MD (ft)	Btm MD (ft)
TH-DBB	12.0	12.7
FATNIP	12.7	13.4
PUPJNT	13.4	31.6
CAS	31.6	5,604.7
AC	5,604.7	5,607.0
XO	5,607.0	5,608.1
CAS	5,608.1	7,029.0
PMPSH	7,029.0	7,029.6
PUPJNT	7,029.6	7,039.7
STCOLL	7,039.7	7,040.1

PLUG BACK Report Date: 10/9/2005 00:00

Component	Top MD (ft)	Btm MD (ft)
CR-DRL	7,081.0	7,083.1

PLUG BACK Report Date: 9/27/2005 00:00

Component	Top MD (ft)	Btm MD (ft)
BRP	7,230.0	7,232.1

PLUG BACK Report Date: 1/22/2003 00:00

Component	Top MD (ft)	Btm MD (ft)
FILL	7,680.0	7,719.0

PLUG BACK Report Date: 11/1/2002 00:00

Component	Top MD (ft)	Btm MD (ft)
CEMENT	7,719.0	7,804.0

PLUG BACK Report Date: 11/1/2002 00:00

Component	Top MD (ft)	Btm MD (ft)
CEMENT	7,804.0	7,806.0

CONDUCTOR CASING Report Date: 2/18/1976 00:00

Item Description	Btm MD(ft)
CASING JOINT(S) 20 in,	52.0

SURFACE CASING Report Date: 11/4/1976 00:00

Item Description	Btm MD (ft)
CASING JOINT(S) 13.375 in, , H-40, 48	290.0

INTERMEDIATE CASING Report Date: 11/10/1976 00:00

Item Description	Btm MD (ft)
CASING JOINT(S) 9.625 in, , K-55, 40	3,291.0

PRODUCTION CASING Report Date: 11/26/1976 00:00

Item Description	Btm MD (ft)
CASING JOINT(S) 7 in, , K-55, 26	73.0
CASING JOINT(S) 7 in, , K-55, 23	5,165.0
CASING JOINT(S) 7 in, , K-55, 26	7,638.0

LINER Report Date: 11/1/2002 00:00

Item Description	Btm MD (ft)
TIE BACK RECEPTACLE 5 in,	5,704.3
SETTING SLEEVE 5 in,	5,711.3
LINER HANGER 5 in,	5,718.4
PBR 5 in,	5,721.4
CROSSOVER 5 in, , N-80	5,722.4
CASING JOINT(S) 5 in, , N-80, 15	7,719.1
LANDING COLLAR 5 in,	7,720.4
CASING JOINT(S) 5 in, , N-80, 15	7,801.3
FLOAT SHOE 5 in,	7,804.0

Well: 342A-3G-RD1 S/T/R: 3G/31S/24E

CASING CEMENT DETAIL
- - -
Sfc Csg. Cmt Vol.: 150cf
Hole Size: 17.5"
Top Job:
Rtns to Sfc: Yes
TOC: Sfc
- - -

Interm Csg. Cmt Vol.: 1414cf
Hole Size: 12.25"
Top Job:
Rtns to Sfc: No
TTOC: Sfc
- - -

Prod. Csg. Cmt Vol.: 2050cf
Hole Size: 8.75"
Top Job:
Rtns to Sfc: Yes
TOC: Sfc
- - -

RD1
Liner Cmt Vol.: 207cf
Hole Size: 6.125"
Top Job:
Rtns to Sfc: Yes
TOC: TOL
- - -

Top of Formation:
UBA: 7138'
BLW: 7633'

Volume Behind Pipe
1.15 Yield Assumed on
Theoretical Calculations (T)

OCCIDENTAL OF ELK HILLS INC

342X-35S

Event: WELL MAINT - RIGLESS
Event End:
Sec. Reason:

Ground Level: 583.0ft
Datum: ORIGINAL KB @ 597.00ft (default)
API No.: 0402977553

Wellbore: ORIGINAL HOLE
PBMD: 7,744.0ft
Btm TMD: 8,500.0ft
Spud Date: 2/5/1986 00:00
BH Coord X: 6,153,098.61uss ft
BH Coord Y: 2,290,061.79uss ft

Casing Shoes (ft) | Schematic (5/1/2008) | Openings Top/Btm/Type/Status

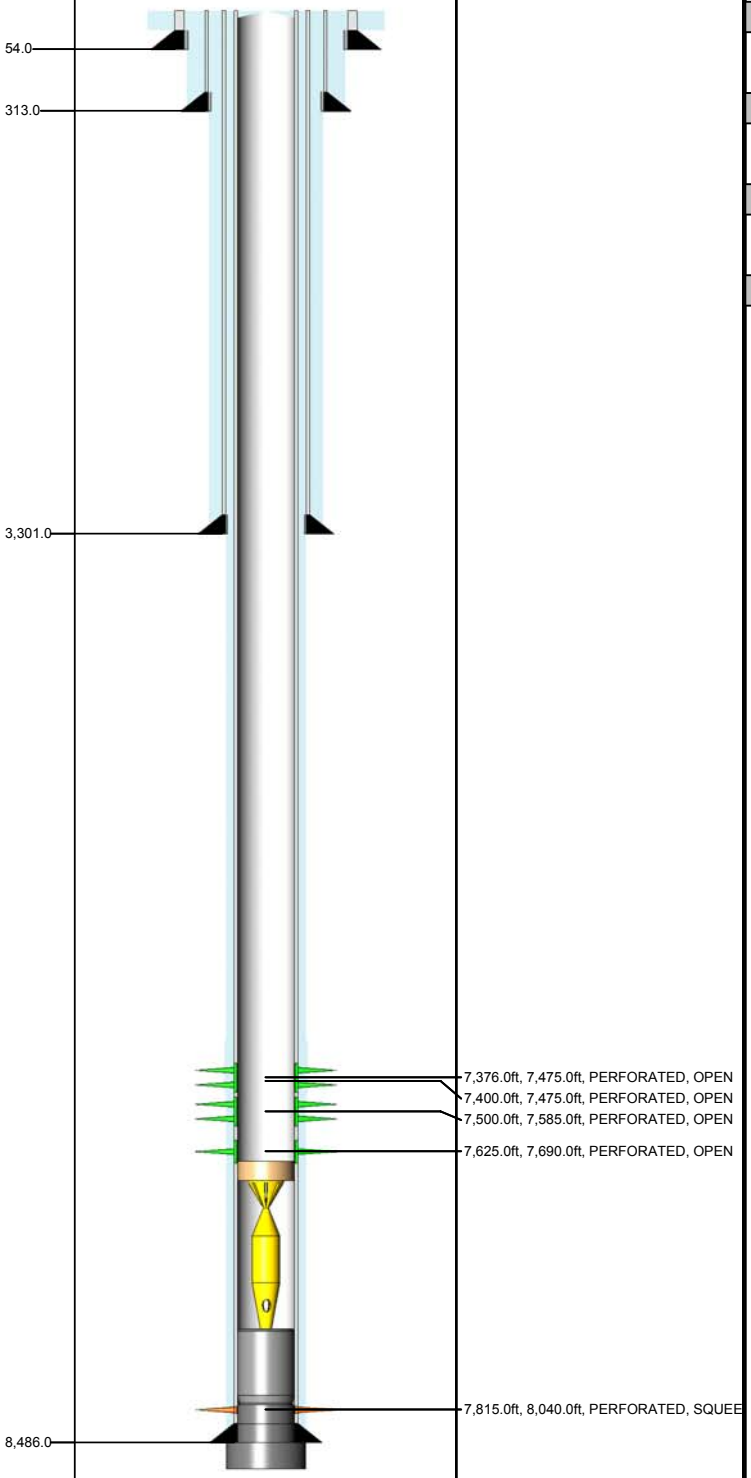

Job Type: PRIMARY		
Top MD (ft)	Base MD (ft)	Plugged
14.0	54.0	

Job Type: PRIMARY		
Top MD (ft)	Base MD (ft)	Plugged
14.0	313.0	

Job Type: PRIMARY		
Top MD (ft)	Base MD (ft)	Plugged
10.0	3,301.0	

Job Type: PRIMARY		
Top MD (ft)	Base MD (ft)	Plugged
14.0	8,486.0	

Job Type: SQUEEZE		
Top MD (ft)	Base MD (ft)	Plugged
7,200.0	7,485.0	

Job Type: SQUEEZE		
Top MD (ft)	Base MD (ft)	Plugged
7,270.0	7,480.0	

CONDUCTOR CASING Report Date: 2/5/1986 00:00

Item	OD (in)	Grade	Wt. (ppf)	TopMD (ft)	BtmMD (ft)
CASING JOINT(S)	20.000			14.0	54.0

SURFACE CASING Report Date: 5/23/1986 00:00

Item	OD (in)	Grade	Wt. (ppf)	TopMD (ft)	BtmMD (ft)
CASING JOINT(S)	13.375	H-40	48.00	14.0	312.0
GUIDE SHOE	13.375		48.00	312.0	313.0

INTERMEDIATE CASING Report Date: 5/28/1986 00:00

Item	OD (in)	Grade	Wt. (ppf)	TopMD (ft)	BtmMD (ft)
CASING JOINT(S)	9.625	K-55	40.00	14.0	3,300.0
GUIDE SHOE	9.625	K-55	40.00	3,300.0	3,301.0

PRODUCTION CASING Report Date: 7/6/1986 00:00

Item	OD (in)	Grade	Wt. (ppf)	TopMD (ft)	BtmMD (ft)
CASING JOINT(S)	7.000	N-80	26.00	14.0	93.1
CASING JOINT(S)	7.000	K-55	23.00	93.1	4,916.4
CASING JOINT(S)	7.000	N-80	26.00	4,916.4	7,090.5
FLAG JOINT	7.000	N-80	26.00	7,090.5	7,109.2
CASING JOINT(S)	7.000	N-80	26.00	7,109.2	8,407.0
FLOAT COLLAR	7.000		26.00	8,407.0	8,409.0
CASING JOINT(S)	7.000	N-80	26.00	8,409.0	8,483.6
FLOAT SHOE	7.000		26.00	8,483.6	8,486.0

Well: 342X-35S S/T/R: 35S/30S/24E

CASING CEMENT DETAIL
- - -
Sfc Csg. Cmt Vol.: 450cuft
Hole Size: 17.5"
Top Job: No
Rtns to Sfc: 10cuft
TOC: SURFACE
- - -

Interm Csg. Cmt Vol.: 1450cuft
Hole Size: 12.25"
Top Job: No
Rtns to Sfc: 85cuft
TOC: SURFACE
- - -

Prod. Csg. Cmt Vol.: 1880cuft
Hole Size: 8.75"
Top Job: No
Rtns to Sfc: 250cuft
TOC: SURFACE

Liner Cmt Vol.:
Hole Size:
Top Job:
Rtns to Sfc:
TTOC:
- - -
Top of Formation:
UBA: 7321'
BLW: 7673 '

Volume Behind Pipe:
1.3 Yield Assumed
Theoretical Calculations (TTOC)

Event: WELL MAINT - RIG
Event End: 4/20/2008 00:00
Sec. Reason: BODY BREAK
End Status: FINISHED - SUCCESS
Well Classification: DEVELOPMENT

OCCIDENTAL OF ELK HILLS INC

343-34S

Ground Level: 808.0ft
Datum: ORIGINAL KB @ 822.00ft (default)
API No.: 0402967590

Wellbore: ST1
PBMD: 5,328.0ft
Btm TMD: 7,686.0ft
Spud Date: 9/21/1982 00:00
BH Coord X: 6,147,725.10uss ft
BH Coord Y: 2,289,902.60uss ft

Casing Shoes (ft)	Schematic (5/1/2008)	Openings Top/Btm/Type/Status

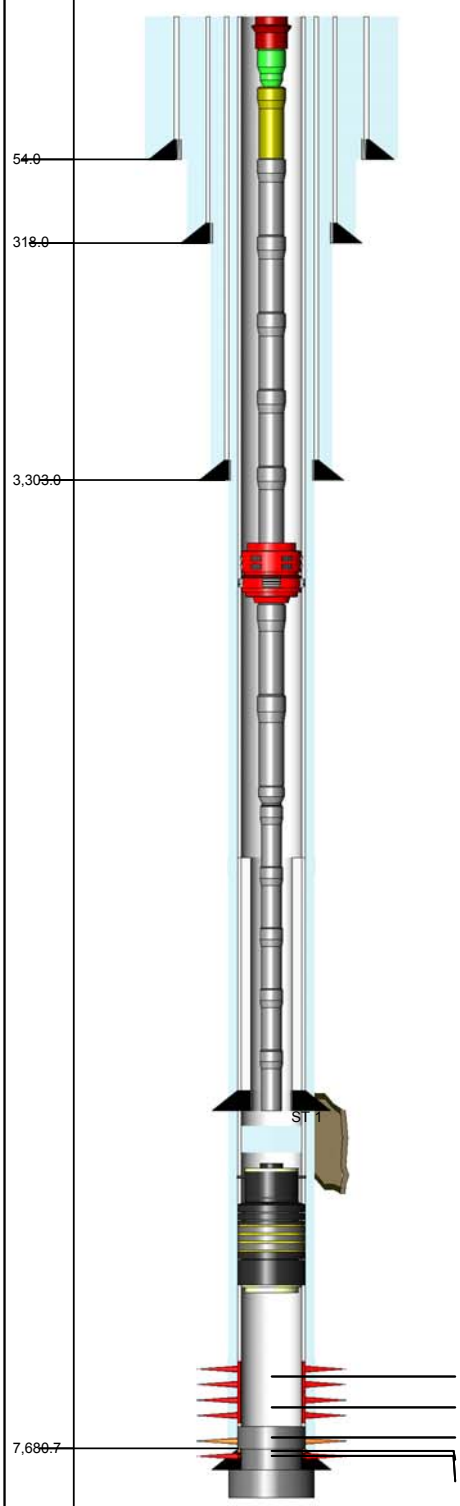

7,045.0ft, 7,049.0ft, PERFORATED, ABAND
7,062.0ft, 7,164.0ft, PERFORATED, ABAND
7,190.0ft, 7,285.0ft, PERFORATED, SQUEE
7,310.0ft, 7,368.0ft, PERFORATED, SQUEE
7,400.0ft, 7,465.0ft, PERFORATED, ABAND

ROD STRING Report Date: 4/19/2008 00:00

Component	Top MD (ft)	Btm MD (ft)
POLROD	0.0	30.0
PNYROD	30.0	46.0
R-4PER	46.0	2,296.0
ROD	2,296.0	5,026.0
R-6PER	5,026.0	7,276.0
RSTBAR	7,276.0	7,280.0
INSPMP	7,280.0	7,310.0

TUBING STRING Report Date: 4/19/2008 00:00

Component	Top MD (ft)	Btm MD (ft)
TH-DBB	14.0	14.8
FATNIP	14.8	15.4
PUPJNT	15.4	17.5
TBGJNT	17.5	4,929.1
AC	4,929.1	4,931.5
TBGJNT	4,931.5	4,964.1
XO	4,964.1	4,965.2
TBGJNT	4,965.2	7,285.1
STNIP	7,285.1	7,286.2
TBGJNT	7,286.2	7,317.2
STCOLL	7,317.2	7,317.6

PLUG BACK Report Date: 2/23/2004 00:00

Component	Top MD (ft)	Btm MD (ft)
BP-PRM	5,356.0	5,361.5

PLUG BACK Report Date: 2/13/2004 00:00

Component	Top MD (ft)	Btm MD (ft)
CEMENT	7,175.0	7,302.0

PLUG BACK Report Date: 1/7/1994 00:00

Component	Top MD (ft)	Btm MD (ft)
CEMENT	7,302.0	7,687.0

PLUG BACK Report Date: 10/28/1982 00:00

Component	Top MD (ft)	Btm MD (ft)
CEMENT	7,687.0	7,700.0

CONDUCTOR CASING Report Date: 9/21/1982 00:00

Item	OD (in)	Grade	Wt. (ppf)	TopMD (ft)	BtmMD (ft)
CASING JOINT(S)	20.000			14.0	54.0

SURFACE CASING Report Date: 10/3/1982 00:00

Item	OD (in)	Grade	Wt. (ppf)	TopMD (ft)	BtmMD (ft)
CASING JOINT(S)	13.375	H-40	48.00	14.0	271.1
FLOAT COLLAR	13.375	H-40	48.00	271.1	271.1
CASING JOINT(S)	13.375	H-40	48.00	271.1	316.6
FLOAT SHOE	13.375	H-40	48.00	316.6	318.0

INTERMEDIATE CASING Report Date: 10/8/1982 00:00

Item	OD (in)	Grade	Wt. (ppf)	TopMD (ft)	BtmMD (ft)
CASING JOINT(S)	9.625	K-55	40.00	14.0	3,259.4
FLOAT COLLAR	9.625	K-55	40.00	3,259.4	3,259.4
CASING JOINT(S)	9.625	K-55	40.00	3,259.4	3,301.8
FLOAT SHOE	9.625	K-55	40.00	3,301.8	3,303.0

PRODUCTION CASING Report Date: 10/28/1982 00:00

Item	OD (in)	Grade	Wt. (ppf)	TopMD (ft)	BtmMD (ft)
CASING JOINT(S)	7.000	N-80	26.00	14.0	74.1
CASING JOINT(S)	7.000	K-55	23.00	74.1	4,987.0
CASING JOINT(S)	7.000	N-80	26.00	4,987.0	6,615.4
FLAG JOINT	7.000	N-80	26.00	6,615.4	6,634.6
CASING JOINT(S)	7.000	N-80	26.00	6,634.6	7,639.8
FLOAT COLLAR	7.000	N-80	26.00	7,639.8	7,639.8
CASING JOINT(S)	7.000	N-80	26.00	7,639.8	7,684.5
FLOAT SHOE	7.000	N-80	26.00	7,684.5	7,687.0

LINER Report Date: 3/7/2004 00:00

Item	OD (in)	Grade	Wt. (ppf)	TopMD (ft)	BtmMD (ft)
LINER HANGER PACKER	7.000			5,087.0	5,111.6
CROSSOVER	5.000			5,111.6	5,112.9
CASING JOINT(S)	5.000	P-110	18.00	5,112.9	7,534.5
	5.000		18.00	7,534.5	7,534.5
CASING JOINT(S)	5.000	P-110	18.00	7,534.5	7,615.0
FLOAT SHOE	5.000		18.00	7,615.0	7,616.0

Well: 343-34S S/T/R: 34S/30S/24E

CASING CEMENT DETAIL
- - -
Sfc Csg. Cmt Vol.: 500 cf
Hole Size: 17.5"
Top Job: no
Rtns to Sfc: 70 cf
TOC: sfc
- - -

Interm Csg. Cmt Vol.: 1630 cf
Hole Size: 12.25"
Top Job: no
Rtns to Sfc: 75 cf
TOC: sfc
- - -

Prod. Csg. Cmt Vol.: 1770 cf
Hole Size: 8.75"
Top Job: no
Rtns to Sfc: no
TTOC: sfc
- - -

Liner Cmt Vol.:
Hole Size:
Top Job:
Rtns to Sfc :
TTOC:
- - -
Top of Formation:
UBA: 7202'
BLW: 7521'

Volume Behind Pipe:
1.3 Yield Assumed
Theoretical Calculations (TTOC)

OCCIDENTAL OF ELK HILLS INC

343-34S

Event: WELL MAINT - RIG
Event End: 4/20/2008 00:00
Sec. Reason: BODY BREAK
End Status: FINISHED - SUCCESS
Well Classification: DEVELOPMENT

Ground Level: 808.0ft
Datum: ORIGINAL KB @ 822.00ft (default)
API No.: 0402967590

Wellbore: ST 1
PBMD: 7,500.0ft
Btm TMD: 7,626.0ft
Spud Date: 9/21/1982 00:00
BH Coord X: 6,147,714.36uss ft
BH Coord Y: 2,289,925.64uss ft

Casing Shoes (ft)	Schematic (5/1/2008)	Openings Top/Btm/Type/Status

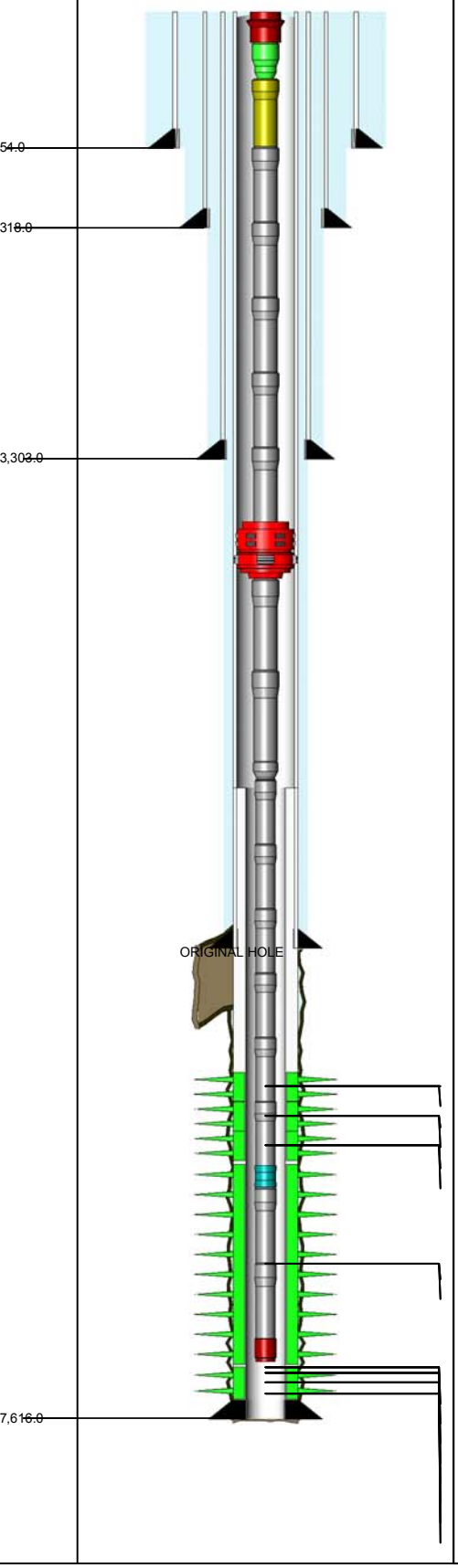

7,202.0ft, 7,209.0ft, PERFORATED, OPEN
7,202.0ft, 7,209.0ft, PERFORATED, OPEN
7,214.0ft, 7,219.0ft, PERFORATED, OPEN
7,214.0ft, 7,219.0ft, PERFORATED, OPEN
7,222.0ft, 7,254.0ft, PERFORATED, OPEN
7,222.0ft, 7,254.0ft, PERFORATED, OPEN

7,280.0ft, 7,330.0ft, PERFORATED, OPEN
7,280.0ft, 7,330.0ft, PERFORATED, OPEN

7,345.0ft, 7,355.0ft, PERFORATED, OPEN
7,345.0ft, 7,355.0ft, PERFORATED, OPEN
7,365.0ft, 7,394.0ft, PERFORATED, OPEN
7,365.0ft, 7,394.0ft, PERFORATED, OPEN
7,404.0ft, 7,455.0ft, PERFORATED, OPEN
7,404.0ft, 7,455.0ft, PERFORATED, OPEN
7,464.0ft, 7,511.0ft, PERFORATED, OPEN
7,464.0ft, 7,511.0ft, PERFORATED, OPEN

ROD STRING — Report Date: 4/19/2008 00:00

Component	Top MD (ft)	Btm MD (ft)
POLROD	0.0	30.0
PNYROD	30.0	46.0
R-4PER	46.0	2,296.0
ROD	2,296.0	5,026.0
R-6PER	5,026.0	7,276.0
RSTBAR	7,276.0	7,280.0
INSPMP	7,280.0	7,310.0

TUBING STRING — Report Date: 4/19/2008 00:00

Component	Top MD (ft)	Btm MD (ft)
TH-DBB	14.0	14.8
FATNIP	14.8	15.4
PUPJNT	15.4	17.5
TBGJNT	17.5	4,929.1
AC	4,929.1	4,931.5
TBGJNT	4,931.5	4,964.1
XO	4,964.1	4,965.2
TBGJNT	4,965.2	7,285.1
STNIP	7,285.1	7,286.2
TBGJNT	7,286.2	7,317.2
STCOLL	7,317.2	7,317.6

CONDUCTOR CASING — Report Date: 9/21/1982 00:00

em	OD (in)	Grade	Wt. (ppf)	TopMD (ft)	BtmMD (ft)
ASING JOINT(S)	20.000			14.0	54.0

SURFACE CASING — Report Date: 10/3/1982 00:00

em	OD (in)	Grade	Wt. (ppf)	TopMD (ft)	BtmMD (ft)
ASING JOINT(S)	13.375	H-40	48.00	14.0	271.1
LOAT COLLAR	13.375	H-40	48.00	271.1	271.1
ASING JOINT(S)	13.375	H-40	48.00	271.1	316.6
LOAT SHOE	13.375	H-40	48.00	316.6	318.0

INTERMEDIATE CASING — Report Date: 10/8/1982 00:00

em	OD (in)	Grade	Wt. (ppf)	TopMD (ft)	BtmMD (ft)
ASING JOINT(S)	9.625	K-55	40.00	14.0	3,259.4
LOAT COLLAR	9.625	K-55	40.00	3,259.4	3,259.4
ASING JOINT(S)	9.625	K-55	40.00	3,259.4	3,301.8
LOAT SHOE	9.625	K-55	40.00	3,301.8	3,303.0

PRODUCTION CASING — Report Date: 10/28/1982 00:00

em	OD (in)	Grade	Wt. (ppf)	TopMD (ft)	BtmMD (ft)
ASING JOINT(S)	7.000	N-80	26.00	14.0	74.1
ASING JOINT(S)	7.000	K-55	23.00	74.1	4,987.0
ASING JOINT(S)	7.000	N-80	26.00	4,987.0	6,615.4
LAG JOINT	7.000	N-80	26.00	6,615.4	6,634.6
ASING JOINT(S)	7.000	N-80	26.00	6,634.6	7,639.8
LOAT COLLAR	7.000	N-80	26.00	7,639.8	7,639.8
ASING JOINT(S)	7.000	N-80	26.00	7,639.8	7,684.5
LOAT SHOE	7.000	N-80	26.00	7,684.5	7,687.0

LINER — Report Date: 3/7/2004 00:00

em	OD (in)	Grade	Wt. (ppf)	TopMD (ft)	BtmMD (ft)
INER HANGER PACKER	7.000			5,087.0	5,111.6
ROSSOVER	5.000			5,111.6	5,112.9
ASING JOINT(S)	5.000	P-110	18.00	5,112.9	7,534.5
	5.000		18.00	7,534.5	7,534.5
ASING JOINT(S)	5.000	P-110	18.00	7,534.5	7,615.0
LOAT SHOE	5.000		18.00	7,615.0	7,616.0

Well: 343-34S-RD1 S/T/R: 34S/30S/24E

CASING CEMENT DETAIL
- - -
Sfc Csg. Cmt Vol.: 500 cf
Hole Size: 17.5"
Top Job: No
Rtns to Sfc: 70 cf
TOC: sfc
- - -

Interm Csg. Cmt Vol.: 1630 cf
Hole Size: 12.25'
Top Job: No
Rtns to Sfc: 75 cf
TOC: sfc
- - -

Prod. Csg. Cmt Vol.: 1770 cf
Hole Size: 8.75"
Top Job: no
Rtns to Sfc: no
TTOC: sfc
- - -

Liner Cmt Vol.:299 cf
Hole Size: 6-1/8"
Top Job: no
Rtns to Sfc :no
TTOC: TOL
- - -
Top of Formation:
UBA: 7201'
BLW: 7550'

Volume Behind Pipe:
1.3 Yield Assumed
Theoretical Calculations (TTOC)

OCCIDENTAL OF ELK HILLS INC

344-35S

Event: WELL ENHANCEMENT
Event End: 8/19/2007 00:00
Sec. Reason:

Ground Level: 727.4ft
Datum: ORIGINAL KB @ 737.00ft (default)
API No.: 0402927778

Wellbore: ORIGINAL HOLE
PBMD: 6,955.0ft
Btm TMD: 7,449.0ft
Spud Date: 9/1/1951 00:00
BH Coord X: 6,152,962.19uss ft
BH Coord Y: 2,289,410.92uss ft

Casing Shoes (ft)	Schematic (9/1/2007)	Openings Top/Btm/Type/Status

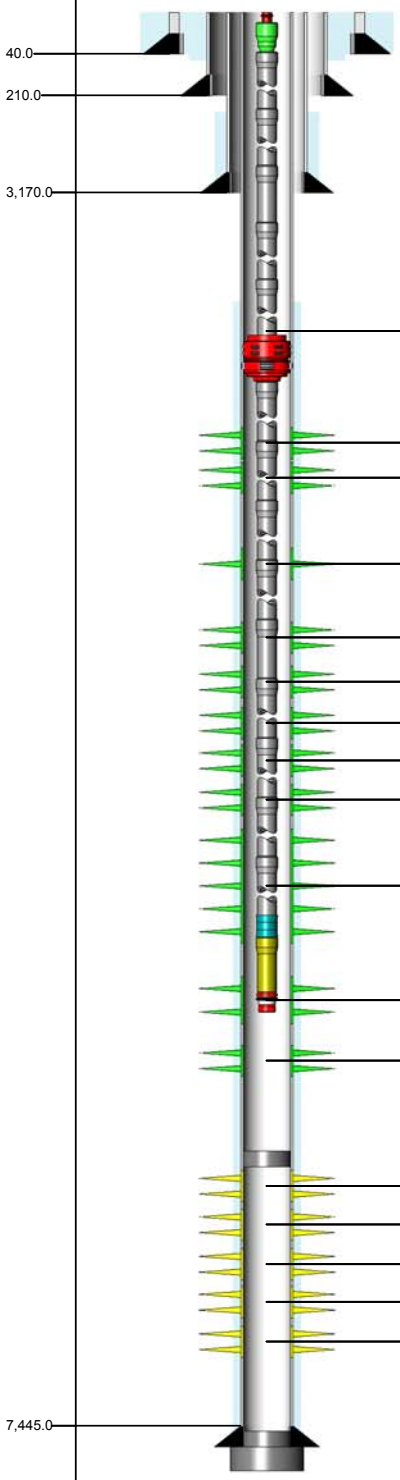

6,260.0ft, 6,261.0ft, WSO PERFS, SQUEEZ
6,434.0ft, 6,468.0ft, PERFORATED, OPEN
6,474.0ft, 6,534.0ft, PERFORATED, OPEN
6,612.0ft, 6,622.0ft, PERFORATED, OPEN
6,680.0ft, 6,698.0ft, PERFORATED, OPEN
6,714.0ft, 6,740.0ft, PERFORATED, OPEN
6,750.0ft, 6,760.0ft, PERFORATED, OPEN
6,766.0ft, 6,786.0ft, PERFORATED, OPEN
6,792.0ft, 6,798.0ft, PERFORATED, OPEN
6,807.0ft, 6,870.0ft, PERFORATED, OPEN
6,880.0ft, 6,910.0ft, PERFORATED, OPEN
6,920.0ft, 6,940.0ft, PERFORATED, OPEN
6,972.0ft, 7,030.0ft, PERFORATED, ISOLAT
7,055.0ft, 7,095.0ft, PERFORATED, ISOLAT
7,120.0ft, 7,255.0ft, PERFORATED, ISOLAT
7,265.0ft, 7,290.0ft, PERFORATED, ISOLAT
7,300.0ft, 7,375.0ft, PERFORATED, ISOLAT

Job Type: PRIMARY

Top MD (ft)	Base MD (ft)	Plugged
9.6	40.0	

Job Type: PRIMARY

Top MD (ft)	Base MD (ft)	Plugged
9.6	210.0	

Job Type: PRIMARY

Top MD (ft)	Base MD (ft)	Plugged
1,360.0	3,170.0	

Job Type: PRIMARY

Top MD (ft)	Base MD (ft)	Plugged
5,600.0	7,447.0	

Job Type: SQUEEZE

Top MD (ft)	Base MD (ft)	Plugged
6,972.0	7,095.0	

CONDUCTOR CASING Report Date: 9/13/1951 00:00

Item	OD (in)	Grade	Wt. (ppf)	TopMD (ft)	BtmMD (ft)
CASING JOINT(S)	26.000			9.6	40.0

SURFACE CASING Report Date: 11/12/1951 00:00

Item	OD (in)	Grade	Wt. (ppf)	TopMD (ft)	BtmMD (ft)
CASING JOINT(S)	16.000	H-40	65.00	9.6	210.0

INTERMEDIATE CASING Report Date: 11/16/1951 00:00

Item	OD (in)	Grade	Wt. (ppf)	TopMD (ft)	BtmMD (ft)
CASING JOINT(S)	10.750	J-55	45.50	9.6	72.0
CASING JOINT(S)	10.750	J-55	40.50	72.0	1,909.0
CASING JOINT(S)	10.750	J-55	45.50	1,909.0	3,170.0

PRODUCTION CASING Report Date: 12/26/1951 00:00

Item	OD (in)	Grade	Wt. (ppf)	TopMD (ft)	BtmMD (ft)
CASING JOINT(S)	7.000	N-80	26.00	9.6	79.0
CASING JOINT(S)	7.000	N-80	23.00	79.0	5,936.0
CASING JOINT(S)	7.000	N-80	26.00	5,936.0	7,445.0
FLOAT COLLAR	7.000		26.00	7,445.0	7,446.0
FLOAT SHOE	7.000		26.00	7,446.0	7,447.0

Well: 344-35S S/T/R: 35S/30S/24E

CASING CEMENT DETAIL
- - -
Sfc Csg. Cmt Vol.: 585CUFT
Hole Size: 18" (est)
Top Job: No
Rtns to Sfc: Yes
TOC: SURFACE
- - -

Interm Csg. Cmt Vol.: 845cuft
Hole Size: 12" (Est)
Top Job: No
Rtns to Sfc: NONE
TTOC: 1360'
- - -

Prod. Csg. Cmt Vol.: 650cuft
Hole Size: 9.625"
Top Job:
Rtns to Sfc: NONE
TTOC: 4716'

Liner Cmt Vol.:
Hole Size:
Top Job:
Rtns to Sfc:
TTOC:
- - -
Top of Formation:
UBA: 6966'
BLW: 7412'

Volume Behind Pipe:
1.3 Yield Assumed
Theoretical Calculations (TTOC)

OCCIDENTAL OF ELK HILLS INC

344-3G

Event: WELL MAINT - RIGLESS
Event End: 8/12/2005 00:00
Sec. Reason:

Ground Level: 942.0ft
Datum: ORIGINAL KB @ 952.00ft (default)
API No.: 0402929022

Wellbore: ORIGINAL HOLE
PBMD: 7,520.0ft
Btm TMD: 7,535.0ft
Spud Date: 10/4/1951 00:00
BH Coord X: 6,147,946.75uss ft
BH Coord Y: 2,284,610.71uss ft

Casing Shoes (ft)	Schematic (9/1/2005)	Openings Top/Btm/Type/Status

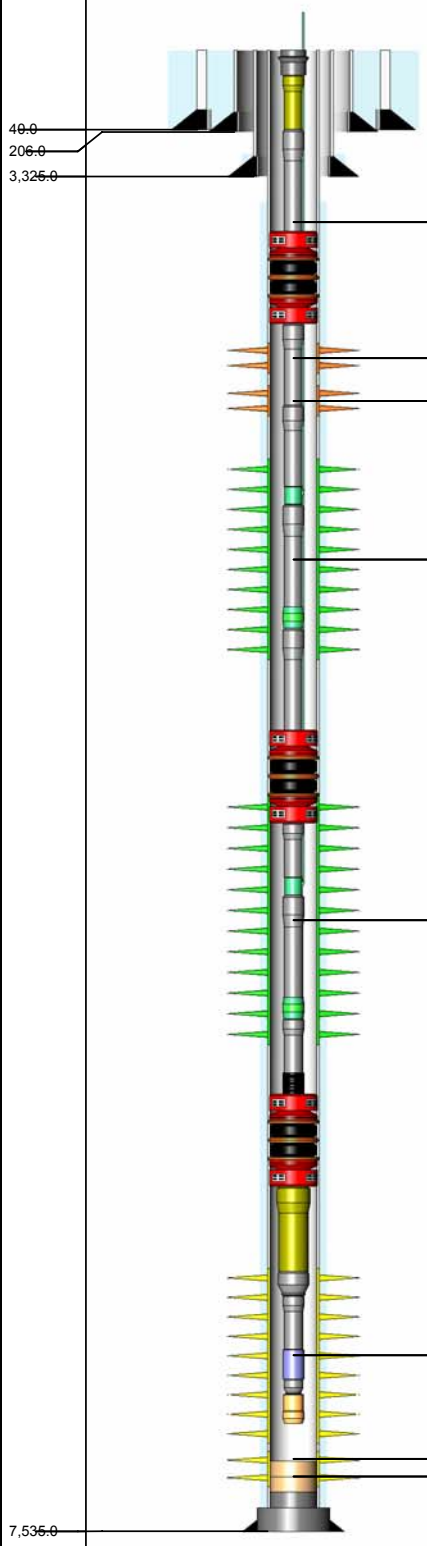

PACKER ASSEMBLY (PERMANENT) Report Date: 8/9/1991 00:00

6,520.0ft, 6,521.0ft, WSO PERFS, SQUEEZED
7,210.0ft, 7,270.0ft, PERFORATED, SQUEEZED
7,280.0ft, 7,320.0ft, PERFORATED, SQUEEZED
7,330.0ft, 7,360.0ft, PERFORATED, OPEN
7,370.0ft, 7,415.0ft, PERFORATED, OPEN
7,430.0ft, 7,465.0ft, PERFORATED, ISOLATED
7,475.0ft, 7,490.0ft, PERFORATED, ISOLATED
7,490.0ft, 7,510.0ft, PERFORATED, ISOLATED

TUBING STRING Report Date: 8/10/1991 00:00

Component	Top MD (ft)	Btm MD (ft)
TH-SGL	10.0	10.6
PUPJNT	10.6	27.2
TBGJNT	27.2	7,176.8
PKR-S	7,176.8	7,181.0
TBGJNT	7,181.0	7,336.3
INJM-V	7,336.3	7,345.5
TBGJNT	7,345.5	7,355.6
LNDNIP	7,355.6	7,356.8
TBGJNT	7,356.8	7,367.0
PKR-S	7,367.0	7,371.2
TBGJNT	7,371.2	7,377.3
INJM-V	7,377.3	7,386.5
TBGJNT	7,386.5	7,411.8
LNDNIP	7,411.8	7,413.1
TBGJNT	7,413.1	7,417.1
SA	7,417.1	7,423.0

PACKER ASSEMBLY (PERMANENT) Report Date: 8/9/1991 00:00

Component	Top MD (ft)	Btm MD (ft)
PKR-S	7,423.0	7,426.0
PUPJNT	7,426.0	7,430.2
XO	7,430.2	7,430.8
TBGJNT	7,430.8	7,437.0
NOGO-O	7,437.0	7,438.2
XO	7,438.2	7,438.5
WLREG	7,438.5	7,439.0

PLUG BACK Report Date: 9/21/2004 00:00

Component	Top MD (ft)	Btm MD (ft)
FILL	7,488.0	7,493.0

PLUG BACK Report Date: 1/8/2004 00:00

Component	Top MD (ft)	Btm MD (ft)
FILL	7,493.0	7,520.0

PLUG BACK Report Date: 5/1/1952 00:00

Component	Top MD (ft)	Btm MD (ft)
CEMENT	7,520.0	7,534.5

PLUG BACK Report Date: 4/28/1952 00:00

Component	Top MD (ft)	Btm MD (ft)
CEMENT	7,534.5	7,535.0

CONDUCTOR CASING Report Date: 10/4/1951 00:00

em	OD (in)	Grade	Wt. (ppf)	TopMD (ft)	BtmMD (ft)
ASING JOINT(S)	26.000			10.0	40.0

SURFACE CASING Report Date: 3/12/1952 00:00

em	OD (in)	Grade	Wt. (ppf)	TopMD (ft)	BtmMD (ft)
ASING JOINT(S)	16.000	H-40	65.00	10.0	206.0

INTERMEDIATE CASING Report Date: 3/18/1952 00:00

em	OD (in)	Grade	Wt. (ppf)	TopMD (ft)	BtmMD (ft)
ASING JOINT(S)	10.750	J-55	45.50	10.0	69.0
ASING JOINT(S)	10.750	J-55	40.50	69.0	2,048.0
ASING JOINT(S)	10.750	J-55	45.50	2,048.0	3,325.0

PRODUCTION CASING Report Date: 4/28/1952 00:00

em	OD (in)	Grade	Wt. (ppf)	TopMD (ft)	BtmMD (ft)
ASING JOINT(S)	7.000	N-80	26.00	10.0	42.0
ASING JOINT(S)	7.000	N-80	23.00	42.0	5,729.0
ASING JOINT(S)	7.000	N-80	26.00	5,729.0	7,535.0

Well: 344-3G S/T/R: 3G/31S/24E

CASING CEMENT DETAIL
- - -
Sfc Csg. Cmt Vol.: 500 sx
Hole Size: 22"
Top Job: No
Rtns to Sfc: Good
TOC: Sfc
- - -

Interm Csg. Cmt Vol.: 700 sx
Hole Size: 15"
Top Job: No
Rtns to Sfc: No
TOC: 1725' (Thermo Survey)
- - -

Prod. Csg. Cmt Vol.: 500 sx
Hole Size: 8.75"
Top Job: No
Rtns to Sfc: 500 sx
TOC: 5080' (Thermo Survey)
- - -

Liner Cmt Vol.:
Hole Size:
Top Job:
Rtns to Sfc:
TTOC:
- - -
Top of Formation:
UBA: N/A
BLW: N/A

Volume Behind Pipe:
1.3 Yield Assumed
Theoretical Calculations (TTOC)

OCCIDENTAL OF ELK HILLS INC

344H-34S

Event: WELL MAINT - RIG
Event End: 12/29/2007 00:00
Sec. Reason: SPLIT
End Status: FINISHED - SUCCESS
Well Classification: DEVELOPMENT

Ground Level: 920.0ft
Datum: ORIGINAL KB @ 928.00ft (default)
API No.: 0402927662

Wellbore: ST 2
PBMD: 6,395.0ft
Btm TMD: 9,134.0ft
Spud Date: 3/11/1952 00:00
BH Coord X: 6,145,845.23uss ft
BH Coord Y: 2,289,799.82uss ft

Casing Shoes (ft)	Schematic (1/1/2008)	Openings Top/Btm/Type/Status

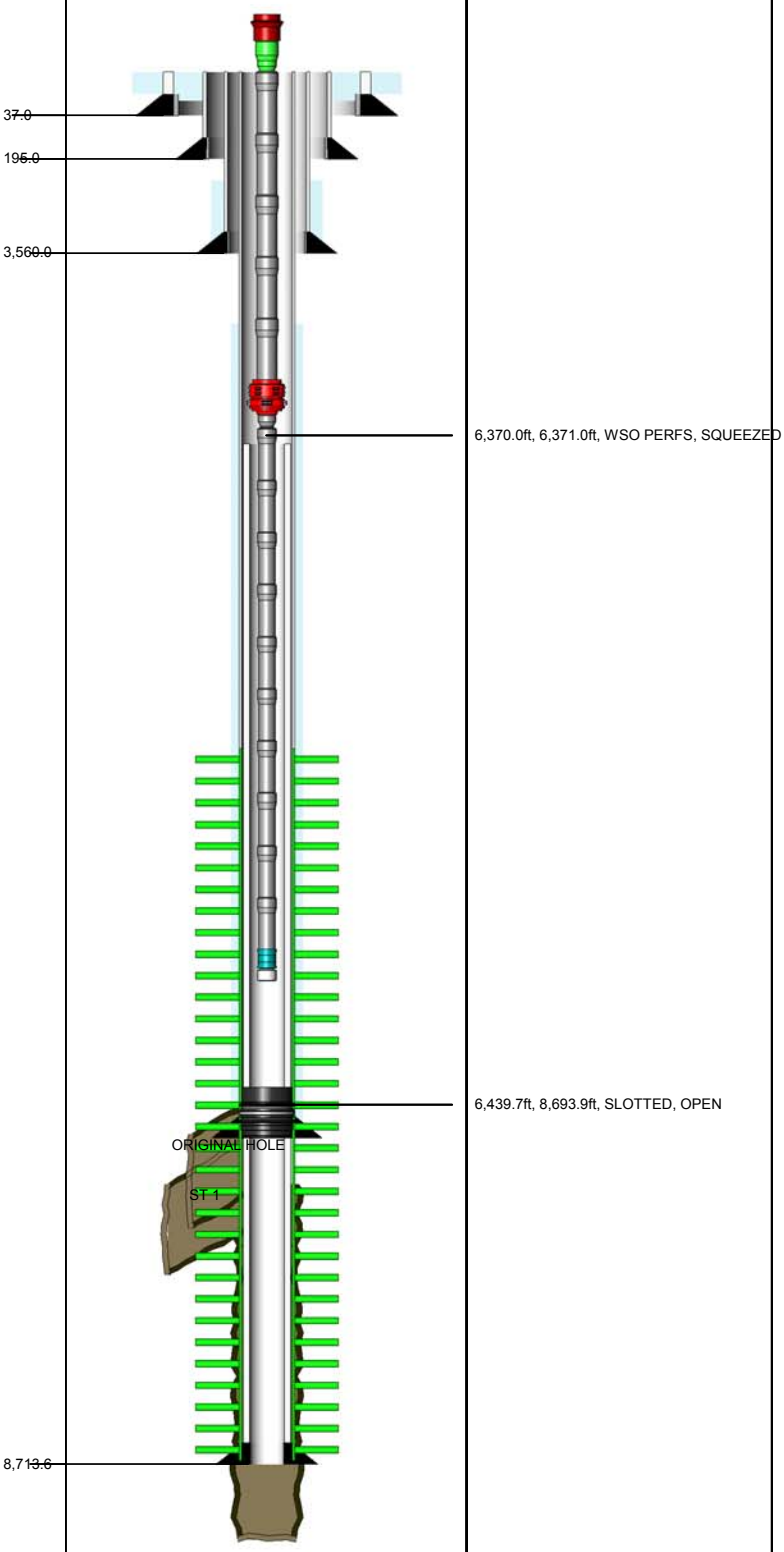

ROD STRING Report Date: 12/26/2007 00:00

Component	Top MD (ft)	Btm MD (ft)
POLROD	0.0	36.0
PNYROD	36.0	48.0
ROD	48.0	2,328.0
ROD	2,328.0	5,268.0
R-4PER	5,268.0	6,318.0
R-6PER	6,318.0	6,768.0
RSTBAR	6,768.0	6,772.0
INSPMP	6,772.0	6,796.0

TUBING STRING Report Date: 12/26/2007 00:00

Component	Top MD (ft)	Btm MD (ft)
TH-DBB	8.0	8.0
FATNIP	8.0	9.0
TBGJNT	9.0	6,352.4
AC	6,352.4	6,354.8
XO	6,354.8	6,355.9
TBGJNT	6,355.9	6,795.4
STNIP	6,795.4	6,796.5
PMPJKT	6,796.5	6,828.0

PLUG BACK Report Date: 5/22/1999 00:00

Component	Top MD (ft)	Btm MD (ft)
BP-DR	6,885.0	6,888.0

CONDUCTOR CASING Report Date: 3/11/1952 00:00

Item	OD (in)	Grade	Wt. (ppf)	TopMD (ft)	BtmMD (ft)
CASING JOINT(S)	26.000			22.0	37.0

SURFACE CASING Report Date: 5/20/1952 00:00

Item	OD (in)	Grade	Wt. (ppf)	TopMD (ft)	BtmMD (ft)
CASING JOINT(S)	16.000	H-40	65.00	22.0	195.0

INTERMEDIATE CASING Report Date: 5/25/1952 00:00

Item	OD (in)	Grade	Wt. (ppf)	TopMD (ft)	BtmMD (ft)
CASING JOINT(S)	10.750	J-55	45.50	22.0	73.0
CASING JOINT(S)	10.750	J-55	40.50	73.0	2,342.0
CASING JOINT(S)	10.750	J-55	45.50	2,342.0	3,560.0

PRODUCTION CASING Report Date: 6/28/1952 00:00

Item	OD (in)	Grade	Wt. (ppf)	TopMD (ft)	BtmMD (ft)
CASING JOINT(S)	7.000	N-80	23.00	22.0	7,370.0

LINER TIE-BACK Report Date: 7/25/1999 00:00

Item	OD (in)	Grade	Wt. (ppf)	TopMD (ft)	BtmMD (ft)
LINER HANGER PACKER	5.870		23.00	6,386.0	6,394.9
LINER HANGER	5.938	N-80		6,394.9	6,399.2
SLIP JOINT	5.881	N-80		6,399.2	6,401.8
CASING JOINT(S)	5.000	K-55	15.00	6,401.8	6,438.3
CROSSOVER	5.000			6,438.3	6,439.0
CROSSOVER	4.500	N-80		6,439.0	6,439.7
CASING JOINT(S)	4.500	N-80	11.60	6,439.7	6,878.0
SLOTTED LINER	4.500	N-80	11.60	6,878.0	8,694.0
GUIDE SHOE	4.500	N-80	11.60	8,694.0	8,713.6

Well: 344H-34S-RD2 S/T/R: 34S/30S/24E

CASING CEMENT DETAIL
- - -
Sfc Csg. Cmt Vol.: 650 cf
Hole Size: (16" Csg.)
Top Job: no
Rtns to Sfc: yes
TOC: Surface
- - -

Interm Csg. Cmt Vol.: 910 cf
Hole Size: 15" (10-3/4" Csg.)
Top Job: no
Rtns to Sfc: no
TOC: 2035'
- - -

Prod. Csg. Cmt Vol.: 650 cf
Hole Size: 9.625" / 9.75' (7" Csg.)
Top Job: no
Rtns to Sfc: no
TTOC: 5120' (per thermometric survey)
- - -

Liner Cmt Vol.: None (slotted)
Hole Size:
Top Job:
Rtns to Sfc :
TTOC:
- - -
Top of Formation:
UBA: 6969'
BLW: 7330'

Volume Behind Pipe:
1.3 Yield Assumed
Theoretical Calculations (TTOC)

OCCIDENTAL OF ELK HILLS INC

344H-34S

Event: WELL MAINT - RIG
Event End: 12/29/2007 00:00
Sec. Reason: SPLIT
End Status: FINISHED - SUCCESS
Well Classification: DEVELOPMENT

Ground Level: 920.0ft
Datum: ORIGINAL KB @ 928.00ft (default)
API No.: 0402927662

Wellbore: ST 1
PBMD: 7,144.0ft
Btm TMD: 9,387.0ft
Spud Date: 3/11/1952 00:00
BH Coord X: 6,145,568.79uss ft
BH Coord Y: 2,289,850.22uss ft

Casing Shoes (ft)	Schematic (1/1/2008)	Openings Top/Btm/Type/Status

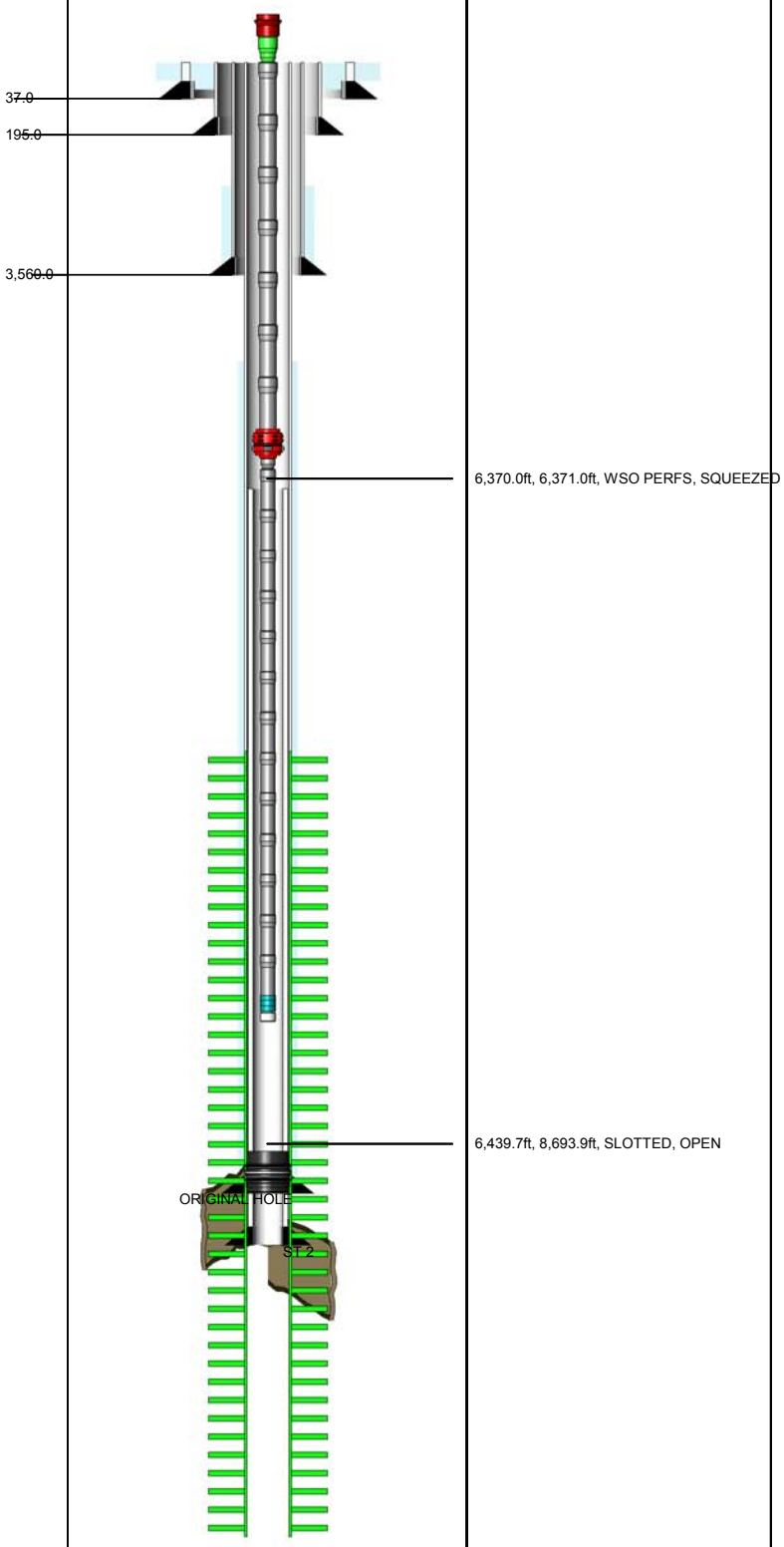

ROD STRING — Report Date: 12/26/2007 00:00

Component	Top MD (ft)	Btm MD (ft)
POLROD	0.0	36.0
PNYROD	36.0	48.0
ROD	48.0	2,328.0
ROD	2,328.0	5,268.0
R-4PER	5,268.0	6,318.0
R-6PER	6,318.0	6,768.0
RSTBAR	6,768.0	6,772.0
INSPMP	6,772.0	6,796.0

TUBING STRING — Report Date: 12/26/2007 00:00

Component	Top MD (ft)	Btm MD (ft)
TH-DBB	8.0	8.0
FATNIP	8.0	9.0
TBGJNT	9.0	6,352.4
AC	6,352.4	6,354.8
XO	6,354.8	6,355.9
TBGJNT	6,355.9	6,795.4
STNIP	6,795.4	6,796.5
PMPJKT	6,796.5	6,828.0

PLUG BACK — Report Date: 5/22/1999 00:00

Component	Top MD (ft)	Btm MD (ft)
BP-DR	6,885.0	6,888.0

CONDUCTOR CASING — Report Date: 3/11/1952 00:00

Item	OD (in)	Grade	Wt. (ppf)	TopMD (ft)	BtmMD (ft)
CASING JOINT(S)	26.000			22.0	37.0

SURFACE CASING — Report Date: 5/20/1952 00:00

Item	OD (in)	Grade	Wt. (ppf)	TopMD (ft)	BtmMD (ft)
CASING JOINT(S)	16.000	H-40	65.00	22.0	195.0

INTERMEDIATE CASING — Report Date: 5/25/1952 00:00

Item	OD (in)	Grade	Wt. (ppf)	TopMD (ft)	BtmMD (ft)
CASING JOINT(S)	10.750	J-55	45.50	22.0	73.0
CASING JOINT(S)	10.750	J-55	40.50	73.0	2,342.0
CASING JOINT(S)	10.750	J-55	45.50	2,342.0	3,560.0

PRODUCTION CASING — Report Date: 6/28/1952 00:00

Item	OD (in)	Grade	Wt. (ppf)	TopMD (ft)	BtmMD (ft)
CASING JOINT(S)	7.000	N-80	23.00	22.0	7,370.0

LINER TIE-BACK — Report Date: 7/25/1999 00:00

Item	OD (in)	Grade	Wt. (ppf)	TopMD (ft)	BtmMD (ft)
LINER HANGER PACKER	5.870		23.00	6,386.0	6,394.9
LINER HANGER	5.938	N-80		6,394.9	6,399.2
SLIP JOINT	5.881	N-80		6,399.2	6,401.8
CASING JOINT(S)	5.000	K-55	15.00	6,401.8	6,438.3
CROSSOVER	5.000			6,438.3	6,439.0
CROSSOVER	4.500	N-80		6,439.0	6,439.7
CASING JOINT(S)	4.500	N-80	11.60	6,439.7	6,878.0
SLOTTED LINER	4.500	N-80	11.60	6,878.0	8,694.0
GUIDE SHOE	4.500	N-80	11.60	8,694.0	8,713.6

Well: 344H-34S-RD1 S/T/R: 34S/30S/24E

CASING CEMENT DETAIL
- - -
Sfc Csg. Cmt Vol.: 650 cf
Hole Size: (16" Csg.)
Top Job: no
Rtns to Sfc: yes
TOC: Surafce
- - -

Interm Csg. Cmt Vol.: 910 cf
Hole Size: 15" (10-3/4")
Top Job: no
Rtns to Sfc: no
TOC: 2035'
- - -

Prod. Csg. Cmt Vol.: 650 cf
Hole Size: 9.625" / 9.75" (7" Csg.)
Top Job: no
Rtns to Sfc: no
TTOC: 5120' (per thermometric survey)
- - -

Liner Cmt Vol.: None (slotted)
Hole Size:
Top Job:
Rtns to Sfc :
TTOC:
- - -
Top of Formation:
UBA: 6969'
BLW: 7330'

Volume Behind Pipe:
1.3 Yield Assumed
Theoretical Calculations (TTOC)

OCCIDENTAL OF ELK HILLS INC

344H-34S

Event: WELL MAINT - RIG
Event End: 12/29/2007 00:00
Sec. Reason: SPLIT
End Status: FINISHED - SUCCESS
Well Classification: DEVELOPMENT

Ground Level: 920.0ft
Datum: ORIGINAL KB @ 928.00ft (default)
API No.: 0402927662

Wellbore: ST 2
PBMD: 6,395.0ft
Btm TMD: 9,134.0ft
Spud Date: 3/11/1952 00:00
BH Coord X: 6,145,845.23uss ft
BH Coord Y: 2,289,799.82uss ft

Casing Shoes (ft)	Schematic (1/1/2008)	Openings Top/Btm/Type/Status

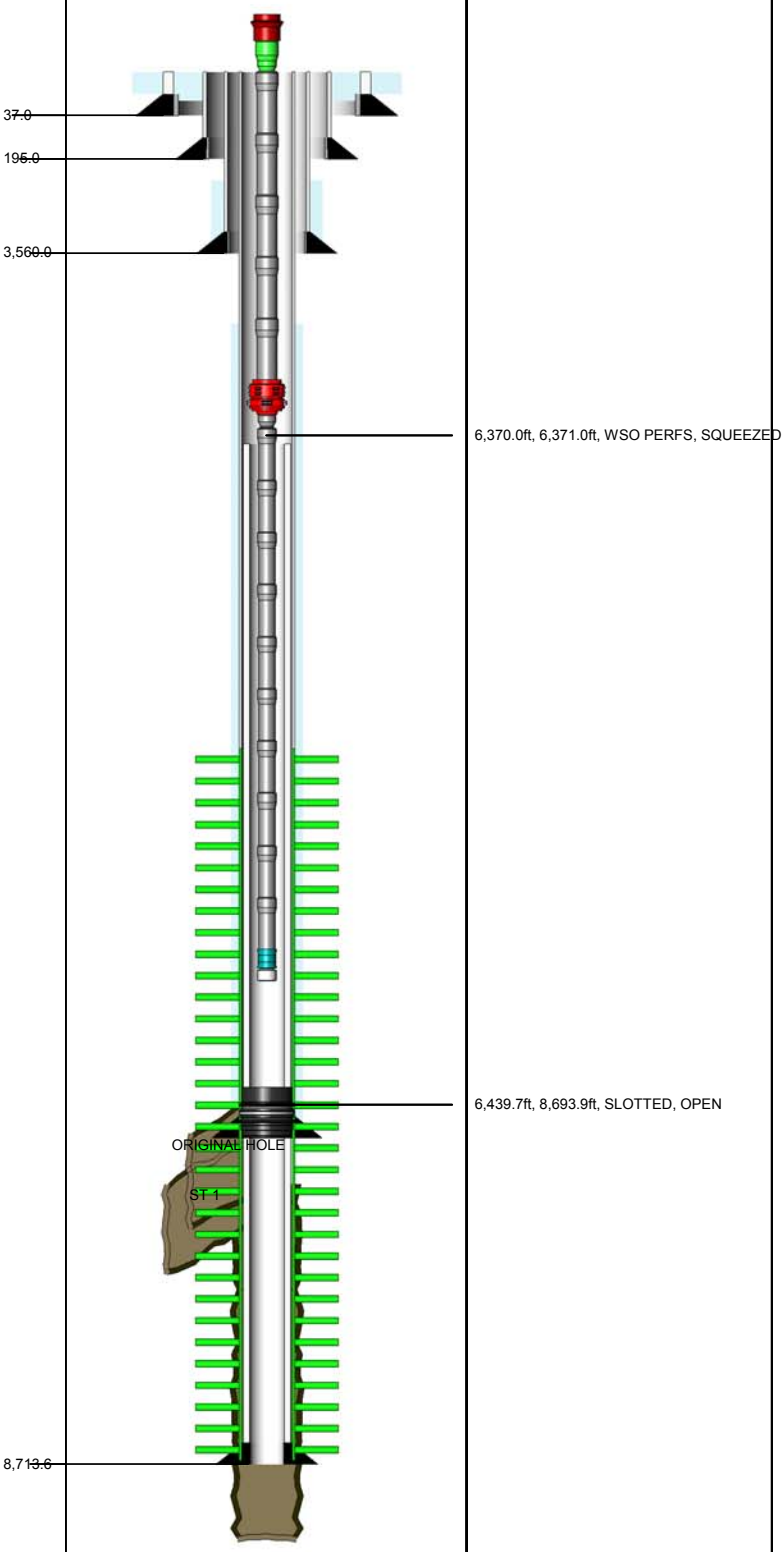

ROD STRING — Report Date: 12/26/2007 00:00

Component	Top MD (ft)	Btm MD (ft)
POLROD	0.0	36.0
PNYROD	36.0	48.0
ROD	48.0	2,328.0
ROD	2,328.0	5,268.0
R-4PER	5,268.0	6,318.0
R-6PER	6,318.0	6,768.0
RSTBAR	6,768.0	6,772.0
INSPMP	6,772.0	6,796.0

TUBING STRING — Report Date: 12/26/2007 00:00

Component	Top MD (ft)	Btm MD (ft)
TH-DBB	8.0	8.0
FATNIP	8.0	9.0
TBGJNT	9.0	6,352.4
AC	6,352.4	6,354.8
XO	6,354.8	6,355.9
TBGJNT	6,355.9	6,795.4
STNIP	6,795.4	6,796.5
PMPJKT	6,796.5	6,828.0

PLUG BACK — Report Date: 5/22/1999 00:00

Component	Top MD (ft)	Btm MD (ft)
BP-DR	6,885.0	6,888.0

CONDUCTOR CASING — Report Date: 3/11/1952 00:00

Item	OD (in)	Grade	Wt. (ppf)	TopMD (ft)	BtmMD (ft)
CASING JOINT(S)	26.000			22.0	37.0

SURFACE CASING — Report Date: 5/20/1952 00:00

Item	OD (in)	Grade	Wt. (ppf)	TopMD (ft)	BtmMD (ft)
CASING JOINT(S)	16.000	H-40	65.00	22.0	195.0

INTERMEDIATE CASING — Report Date: 5/25/1952 00:00

Item	OD (in)	Grade	Wt. (ppf)	TopMD (ft)	BtmMD (ft)
CASING JOINT(S)	10.750	J-55	45.50	22.0	73.0
CASING JOINT(S)	10.750	J-55	40.50	73.0	2,342.0
CASING JOINT(S)	10.750	J-55	45.50	2,342.0	3,560.0

PRODUCTION CASING — Report Date: 6/28/1952 00:00

Item	OD (in)	Grade	Wt. (ppf)	TopMD (ft)	BtmMD (ft)
CASING JOINT(S)	7.000	N-80	23.00	22.0	7,370.0

LINER TIE-BACK — Report Date: 7/25/1999 00:00

Item	OD (in)	Grade	Wt. (ppf)	TopMD (ft)	BtmMD (ft)
LINER HANGER PACKER	5.870		23.00	6,386.0	6,394.9
LINER HANGER	5.938	N-80		6,394.9	6,399.2
SLIP JOINT	5.881	N-80		6,399.2	6,401.8
CASING JOINT(S)	5.000	K-55	15.00	6,401.8	6,438.3
CROSSOVER	5.000			6,438.3	6,439.0
CROSSOVER	4.500	N-80		6,439.0	6,439.7
CASING JOINT(S)	4.500	N-80	11.60	6,439.7	6,878.0
SLOTTED LINER	4.500	N-80	11.60	6,878.0	8,694.0
GUIDE SHOE	4.500	N-80	11.60	8,694.0	8,713.6

Well: 344H-34S-RD2 S/T/R: 34S/30S/24E

CASING CEMENT DETAIL
- - -
Sfc Csg. Cmt Vol.: 650 cf
Hole Size: (16" Csg.)
Top Job: no
Rtns to Sfc: yes
TOC: Surface
- - -

Interm Csg. Cmt Vol.: 910 cf
Hole Size: 15" (10-3/4" Csg.)
Top Job: no
Rtns to Sfc: no
TOC: 2035'
- - -

Prod. Csg. Cmt Vol.: 650 cf
Hole Size: 9.625" / 9.75' (7" Csg.)
Top Job: no
Rtns to Sfc: no
TTOC: 5120' (per thermometric survey)
- - -

Liner Cmt Vol.: None (slotted)
Hole Size:
Top Job:
Rtns to Sfc :
TTOC:
- - -
Top of Formation:
UBA: 6969'
BLW: 7330'

Volume Behind Pipe:
1.3 Yield Assumed
Theoretical Calculations (TTOC)

OCCIDENTAL OF ELK HILLS INC

344X-35S

Event: DEV COMPLETION
Event End: 7/10/2007 00:00
Sec. Reason:

Water Depth: 744.9ft
Datum: ORIGINAL KB @ 769.90ft (default)
API No.: 0403033248

Wellbore: ORIGINAL HOLE
PBMD: 7,598.0ft
Btm TMD: 7,735.0ft
Spud Date: 5/28/2007 14:30
BH Coord X: 6,152,900.70uss ft
BH Coord Y: 2,289,400.26uss ft

Casing Shoes (ft) | Schematic (7/10/2007) | Openings Top/Btm/Type/Status

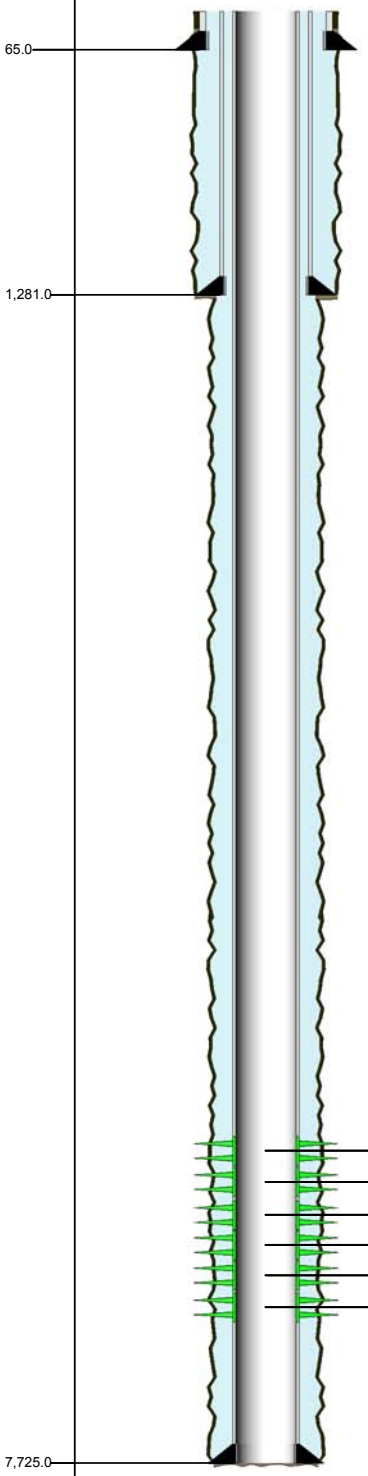

7,317.0ft, 7,349.0ft, PERFORATED, OPEN
7,364.0ft, 7,390.0ft, PERFORATED, OPEN
7,414.0ft, 7,424.0ft, PERFORATED, OPEN
7,430.0ft, 7,458.0ft, PERFORATED, OPEN
7,464.0ft, 7,500.0ft, PERFORATED, OPEN
7,512.0ft, 7,536.0ft, PERFORATED, OPEN

Job Type: PRIMARY

Top MD (ft)	Base MD (ft)	Plugged
25.0	1,281.0	

Job Type: PRIMARY

Top MD (ft)	Base MD (ft)	Plugged
6,004.0	7,725.0	Y
0.0	6,004.0	

CONDUCTOR CASING Report Date: 5/11/2007 00:00

Item	OD (in)	Grade	Wt. (ppf)	TopMD (ft)	BtmMD (ft)
CASING JOINT(S)	14.000			25.0	65.0

SURFACE CASING Report Date: 5/30/2007 00:00

Item	OD (in)	Grade	Wt. (ppf)	TopMD (ft)	BtmMD (ft)
CASING JOINT(S)	9.625		36.00	25.0	1,240.7
FLOAT COLLAR	9.625		36.00	1,240.7	1,240.7
CASING JOINT(S)	9.625		36.00	1,240.7	1,280.0
GUIDE SHOE	9.625	K-55	36.00	1,280.0	1,281.0

PRODUCTION CASING Report Date: 6/10/2007 00:00

Item	OD (in)	Grade	Wt. (ppf)	TopMD (ft)	BtmMD (ft)
CASING JOINT(S)	7.000	N-80	26.00	25.0	6,002.3
CEMENT STAGE TOOL	7.000	N-80	26.00	6,002.3	6,004.4
CASING JOINT(S)	7.000	N-80	26.00	6,004.4	6,783.4
PUP JOINT	7.000	N-80	26.00	6,783.4	6,802.9
CASING JOINT(S)	7.000	N-80	26.00	6,802.9	7,630.0
FLOAT COLLAR	7.000	N-80	26.00	7,630.0	7,631.6
CASING JOINT(S)	7.000	N-80	26.00	7,631.6	7,723.5
FLOAT SHOE	7.000	N-80	26.00	7,723.5	7,725.0

Well: 344X-35S S/T/R: 35S/30S/24E

CASING CEMENT DETAIL
- - -
Sfc Csg. Cmt Vol.: 115 sx
Hole Size: 13.5"
Top Job:
Rtns to Sfc: NONE
TTOC: SURFACE
- - -

Interm Csg. Cmt Vol.:
Hole Size:
Top Job:
Rtns to Sfc: NONE
TTOC: '
- - -

Prod. Csg. Cmt Vol.: 1232 sx
Hole Size: 9.875"
Top Job:
Rtns to Sfc: NONE
TTOC: 996'

Liner Cmt Vol.:
Hole Size:
Top Job:
Rtns to Sfc:
TTOC:
- - -
Top of Formation:
UBA: 6954'
BLW: 7536'

Volume Behind Pipe:
1.3 Yield Assumed
Theoretical Calculations (TTOC)

OCCIDENTAL OF ELK HILLS INC

345-34S

Event: WELL MAINT - RIG
Event End: 8/22/2006 00:00
Sec. Reason: PIN PART
End Status: FINISHED - SUCCESS
Well Classification: DEVELOPMENT

Ground Level: 891.0ft
Datum: ORIGINAL KB @ 905.00ft (default)
API No.: 0402967313

Wellbore: ST1
PBMD: 6,595.0ft
Btm TMD: 7,439.0ft
Spud Date: 8/5/1982 00:00
BH Coord X: 6,147,756.41uss ft
BH Coord Y: 2,288,846.13uss ft

Casing Shoes (ft)	Schematic (9/1/2006)	Openings Top/Btm/Type/Status

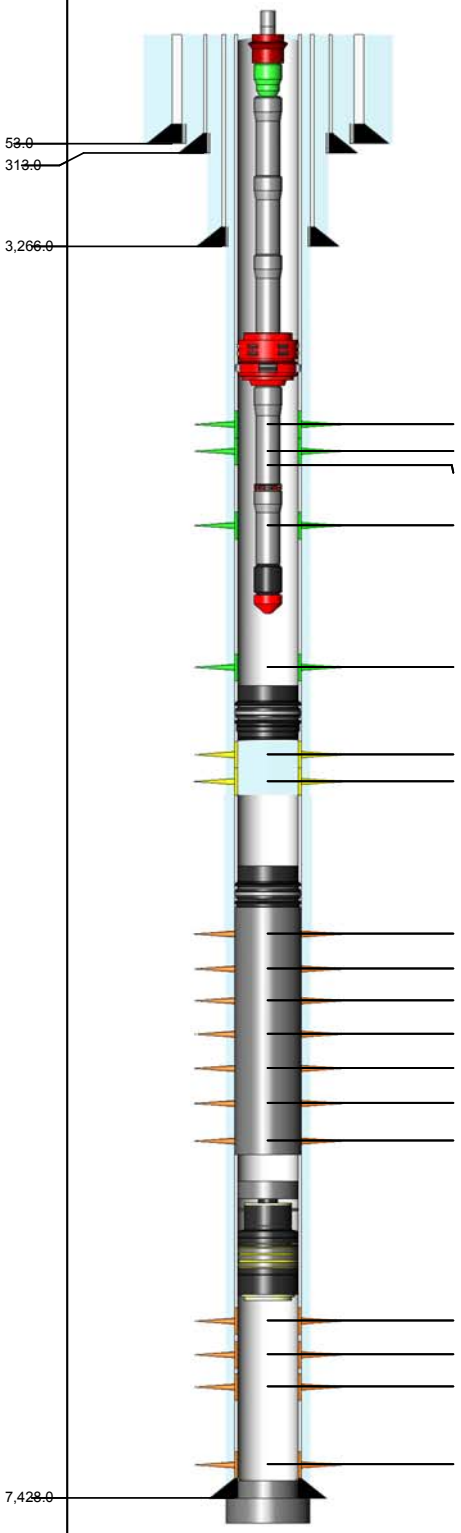

6,342.0ft, 6,348.0ft, PERFORATED, OPEN
6,348.0ft, 6,368.0ft, PERFORATED, OPEN
6,372.0ft, 6,390.0ft, REPERFORATED, OPEN
6,486.0ft, 6,496.0ft, PERFORATED, OPEN
6,588.0ft, 6,592.0ft, PERFORATED, OPEN
6,600.0ft, 6,660.0ft, PERFORATED, ISOLATED
6,660.0ft, 6,700.0ft, PERFORATED, ISOLATED
6,710.0ft, 6,760.0ft, PERFORATED, SQUEEZED
6,805.0ft, 6,840.0ft, PERFORATED, SQUEEZED
6,865.0ft, 6,910.0ft, PERFORATED, SQUEEZED
6,938.0ft, 6,985.0ft, PERFORATED, SQUEEZED
7,010.0ft, 7,025.0ft, PERFORATED, SQUEEZED
7,050.0ft, 7,078.0ft, PERFORATED, SQUEEZED
7,103.0ft, 7,140.0ft, PERFORATED, SQUEEZED
7,194.0ft, 7,234.0ft, PERFORATED, SQUEEZED
7,250.0ft, 7,256.0ft, PERFORATED, SQUEEZED
7,268.0ft, 7,289.0ft, PERFORATED, SQUEEZED
7,383.0ft, 7,385.0ft, PERFORATED, SQUEEZED

ROD STRING Report Date: 8/20/2006 00:00

Component	Top MD (ft)	Btm MD (ft)
POLROD	0.0	30.0
PNYROD	30.0	34.0
R-4PER	34.0	2,104.0
ROD	2,104.0	4,654.0
R-4PER	4,654.0	6,454.0
RSTBAR	6,454.0	6,458.0
INSPMP	6,458.0	6,482.0

TUBING STRING Report Date: 8/20/2006 00:00

Component	Top MD (ft)	Btm MD (ft)
TH-DBB	14.0	14.8
FATNIP	14.8	15.4
TBGJNT	15.4	6,116.1
AC	6,116.1	6,118.4
TBGJNT	6,118.4	6,458.1
STNIP	6,458.1	6,459.2
PERFJT	6,459.2	6,463.2
TBGJNT	6,463.2	6,525.0
TBGCOL	6,525.0	6,525.5
BULPLG	6,525.5	6,525.8

PLUG BACK Report Date: 10/14/2004 00:00

Component	Top MD (ft)	Btm MD (ft)
BP-DR	6,595.0	6,597.5

PLUG BACK Report Date: 4/27/2004 00:00

Component	Top MD (ft)	Btm MD (ft)
CR-PRM	6,705.0	6,707.6

PLUG BACK Report Date: 4/27/2004 00:00

Component	Top MD (ft)	Btm MD (ft)
CEMENT	6,707.0	7,140.0

PLUG BACK Report Date: 2/1/1983 00:00

Component	Top MD (ft)	Btm MD (ft)
CEMENT	7,165.0	7,170.0
BP-PRM	7,170.0	7,173.0

PLUG BACK Report Date: 11/21/1982 00:00

Component	Top MD (ft)	Btm MD (ft)
CEMENT	7,387.5	7,428.0

PLUG BACK Report Date: 9/3/1982 00:00

Component	Top MD (ft)	Btm MD (ft)
CEMENT	7,428.0	7,439.0

CONDUCTOR CASING Report Date: 8/5/1982 00:00

Item	OD (in)	Grade	Wt. (ppf)	TopMD (ft)	BtmMD (ft)
CASING JOINT(S)	20.000			14.0	53.0

SURFACE CASING Report Date: 8/10/1982 00:00

Item	OD (in)	Grade	Wt. (ppf)	TopMD (ft)	BtmMD (ft)
CASING JOINT(S)	13.375	H-40	48.00	14.0	313.0

INTERMEDIATE CASING Report Date: 8/15/1982 00:00

Item	OD (in)	Grade	Wt. (ppf)	TopMD (ft)	BtmMD (ft)
CASING JOINT(S)	9.625	K-55	40.00	14.0	3,266.0

PRODUCTION CASING Report Date: 9/3/1982 00:00

Item	OD (in)	Grade	Wt. (ppf)	TopMD (ft)	BtmMD (ft)
CASING JOINT(S)	7.000	K-55	26.00	14.0	74.3
CASING JOINT(S)	7.000	K-55	23.00	74.3	4,835.2
CASING JOINT(S)	7.000	K-55	26.00	4,835.2	6,235.6
FLAG JOINT	7.000	K-55	26.00	6,235.6	6,249.7
CASING JOINT(S)	7.000	K-55	26.00	6,249.7	7,387.5
FLOAT COLLAR	7.000	K-55	26.00	7,387.5	7,389.6
CASING JOINT(S)	7.000	K-55	26.00	7,389.6	7,427.0
GUIDE SHOE	7.000	K-55	26.00	7,427.0	7,428.0

Well: 345-34S S/T/R: 34S/30S/24E

CASING CEMENT DETAIL
- - -
Sfc Csg. Cmt Vol.: 550 cf
Hole Size: 17.5" (13.375" Csg.)
Top Job: no
Rtns to Sfc: no
TTOC: Surface
- - -

Interm Csg. Cmt Vol.: 1550 cf
Hole Size: 12.25" (9.625" Csg.)
Top Job: Yes (25 cf "G")
Rtns to Sfc: no
TTOC: Surface
- - -

Prod. Csg. Cmt Vol.: 1500
Hole Size: 8.75" (7" Csg.)
Top Job: no
Rtns to Sfc: no
TTOC: Surface
- - -

Liner Cmt Vol.: None
Hole Size:
Top Job:
Rtns to Sfc :
TTOC:
- - -
Top of Formation:
UBA: 6789'
BLW: 7165'

Volume Behind Pipe:
1.3 Yield Assumed
Theoretical Calculations (TTOC)

OCCIDENTAL OF ELK HILLS INC

345A-35S

Event: RECOMPLETION
Event End: 7/8/2009 00:00
Sec. Reason: Squeeze the A Shale,

Ground Level: 750.8ft
Datum: ORIGINAL KB @ 773.80ft (default)
API No.: 0403021082

Wellbore: ORIGINAL HOLE
PBMD: 6,905.0ft
Btm TMD: 7,510.0ft
Spud Date: 10/31/2002 00:00
BH Coord X: 6,152,905.93uss ft
BH Coord Y: 2,288,824.54uss ft

Casing Shoes (ft)

Schematic (7/8/2009)

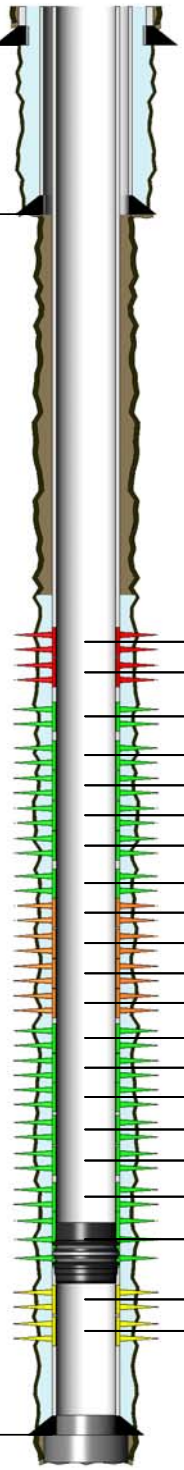

Openings Top/Btm/Type/Status

6,686.0ft, 6,708.0ft, PERFORATED, ABAND
6,720.0ft, 6,746.0ft, PERFORATED, ABAND
6,774.0ft, 6,779.0ft, PERFORATED, OPEN
6,793.0ft, 6,796.0ft, PERFORATED, OPEN
6,810.0ft, 6,829.0ft, PERFORATED, OPEN
6,840.0ft, 6,846.0ft, PERFORATED, OPEN
6,860.0ft, 6,887.0ft, PERFORATED, OPEN
6,986.0ft, 7,018.0ft, PERFORATED, OPEN
7,023.0ft, 7,041.0ft, PERFORATED, SQUE
7,054.0ft, 7,092.0ft, PERFORATED, SQUE
7,100.0ft, 7,142.0ft, PERFORATED, SQUE
7,146.0ft, 7,180.0ft, PERFORATED, SQUE
7,218.0ft, 7,238.0ft, PERFORATED, OPEN
7,242.0ft, 7,274.0ft, PERFORATED, OPEN
7,274.0ft, 7,282.0ft, PERFORATED, OPEN
7,296.0ft, 7,318.0ft, PERFORATED, OPEN
7,324.0ft, 7,352.0ft, PERFORATED, OPEN
7,362.0ft, 7,370.0ft, PERFORATED, OPEN
7,370.0ft, 7,380.0ft, PERFORATED, OPEN
7,386.0ft, 7,394.0ft, PERFORATED, ISOLA
7,398.0ft, 7,402.0ft, PERFORATED, ISOLA

Job Type: PRIMARY

Top MD (ft)	Base MD (ft)	Plugged
23.0	1,049.0	N

Job Type: PRIMARY

Top MD (ft)	Base MD (ft)	Plugged
6,242.0	7,498.0	Y

Job Type: SQUEEZE

Top MD (ft)	Base MD (ft)	Plugged
6,939.0	7,180.0	

CONDUCTOR CASING Report Date: 10/28/2002 00:00

Item	OD (in)	Grade	Wt. (ppf)	TopMD (ft)	BtmMD (ft)
CASING JOINT(S)	14.000			23.0	63.0

SURFACE CASING Report Date: 11/2/2002 00:00

Item	OD (in)	Grade	Wt. (ppf)	TopMD (ft)	BtmMD (ft)
CASING JOINT(S)	9.625	K-55	36.00	23.0	1,004.9
	9.625			1,004.9	1,004.9
CASING JOINT(S)	9.625	K-55	36.00	1,004.9	1,047.2
GUIDE SHOE	9.625	K-55	36.00	1,047.2	1,049.0

PRODUCTION CASING Report Date: 11/30/2002 00:00

Item	OD (in)	Grade	Wt. (ppf)	TopMD (ft)	BtmMD (ft)
CASING JOINT(S)	7.000	N-80	29.00	23.0	6,761.7
FLAG JOINT	7.000	N-80	29.00	6,761.7	6,784.3
CASING JOINT(S)	7.000	N-80	29.00	6,784.3	7,404.9
FLOAT COLLAR	7.000	N-80	29.00	7,404.9	7,406.4
CASING JOINT(S)	7.000	N-80	29.00	7,406.4	7,496.5
FLOAT SHOE	7.000	N-80	29.00	7,496.5	7,498.0

Well: 345A-35S S/T/R: 35S/30S/24E

CASING CEMENT DETAIL
- - -
Sfc Csg. Cmt Vol.: 250 sx
Hole Size: 12.25"
Top Job: No
Rtns to Sfc: 20 Bbls
TTOC: SURFACE
- - -

Interm Csg. Cmt Vol.:
Hole Size:
Top Job:
Rtns to Sfc:
TTOC:
- - -

Prod. Csg. Cmt Vol.: 1440 sx
Hole Size: 8.750"
Top Job: NO
Rtns to Sfc: NONE
TTOC: SURFACE

Liner Cmt Vol.:
Hole Size:
Top Job:
Rtns to Sfc:
TTOC:
- - -
Top of Formation:
UBA: 6921'
BLW: 7402'

Volume Behind Pipe:
1.3 Yield Assumed
Theoretical Calculations (TTOC)

OCCIDENTAL OF ELK HILLS INC

346-34S

Event: WELL MAINT - RIGLESS
Event End:
Sec. Reason:

Ground Level: 912.0ft
Datum: ORIGINAL KB @ 922.00ft (default)
API No.: 0402927663

Wellbore: ORIGINAL HOLE
PBMD: 6,030.0ft
Btm TMD: 7,100.0ft
Spud Date: 9/21/1951 00:00
BH Coord X: 6,147,824.00uss ft
BH Coord Y: 2,288,426.00uss ft

Casing Shoes (ft)	Schematic (1/1/2009)	Openings Top/Btm/Type/Status

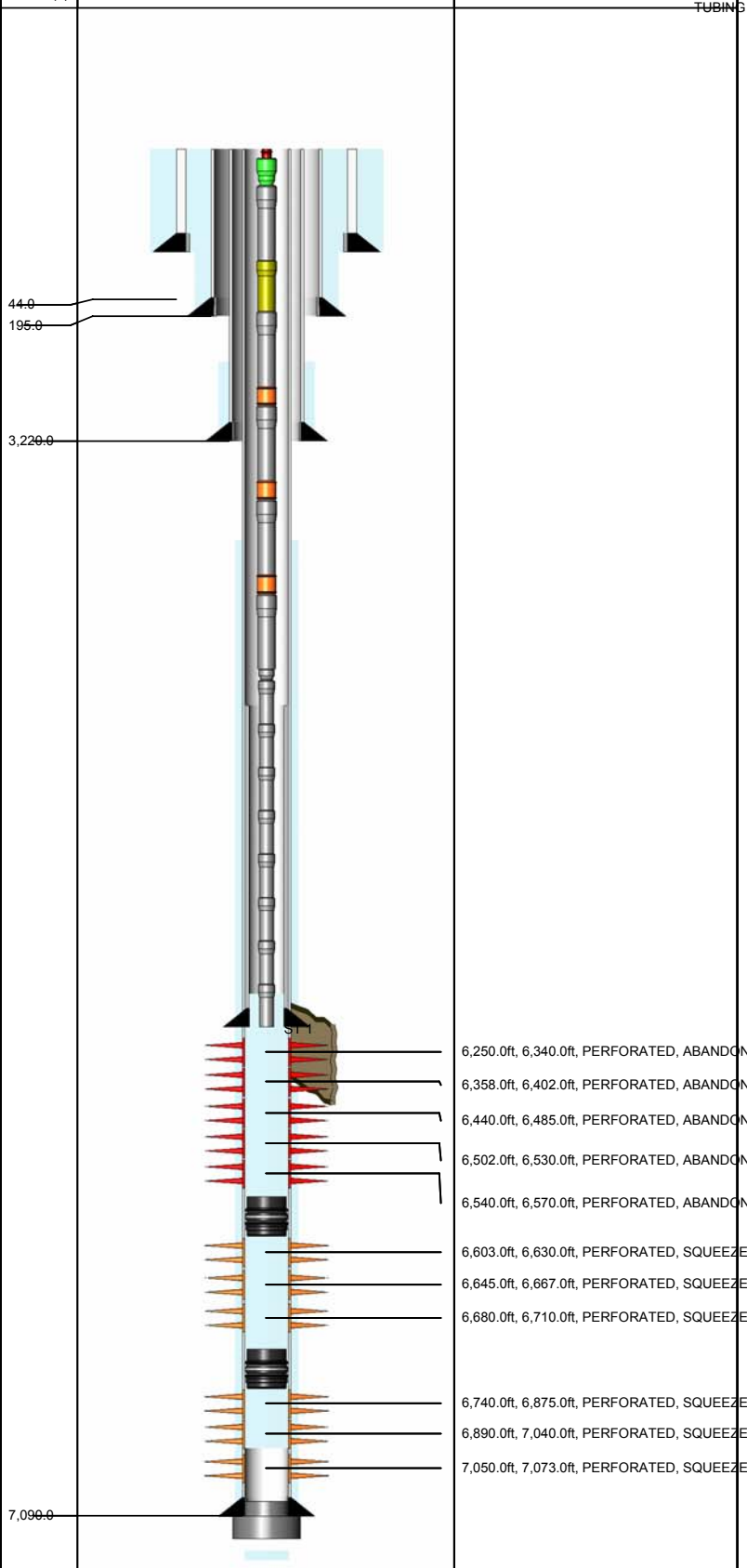

TUBING STRING W/ BYPASS TBG — Report Date: 9/4/2003 00:00

Component	Top MD (ft)	Btm MD (ft)
TH-DBB	10.0	10.4
FATNIP	10.4	11.1
TBGJNT	11.1	42.5
PUPJNT	42.5	48.5
TBGJNT	48.5	2,317.9
GLM-V	2,317.9	2,326.3
TBGJNT	2,326.3	4,213.0
GLM-V	4,213.0	4,221.4
TBGJNT	4,221.4	5,602.5
GLM-V	5,602.5	5,611.1
TBGJNT	5,611.1	5,736.8
XO	5,736.8	5,737.9
TBGJNT	5,737.9	6,575.4
GLM-V	6,575.4	6,582.0
PUPJNT	6,582.0	6,592.1
ON-OFF	6,592.1	6,593.2
PKR-S	6,593.2	6,598.4
TBGJNT	6,598.4	6,629.7
PUPJNT	6,629.7	6,639.7
TBGJNT	6,639.7	6,732.9
SS-C	6,732.9	6,736.9
PUPJNT	6,736.9	6,746.9
PKR-S	6,746.9	6,752.0
TBGJNT	6,752.0	6,783.2
PUPJNT	6,783.2	6,791.2
PUPJNT	6,791.2	6,799.2
TBGJNT	6,799.2	7,016.7
SS-C	7,016.7	7,020.7
PUPJNT	7,020.7	7,030.8
PNIP-O	7,030.8	7,031.9
SA	7,031.9	7,032.0
PKR-S	7,032.0	7,038.1
PUPJNT	7,038.1	7,048.2
PNIP-O	7,048.2	7,049.6
WLREG	7,049.6	7,050.0

PLUG BACK — Report Date: 6/15/1998 00:00

Component	Top MD (ft)	Btm MD (ft)
BP-DR	6,590.0	6,592.0

PLUG BACK — Report Date: 12/30/1996 00:00

Component	Top MD (ft)	Btm MD (ft)
BP-DR	6,725.0	6,727.0

PLUG BACK — Report Date: 12/9/1951 00:00

Component	Top MD (ft)	Btm MD (ft)
CEMENT	7,080.0	7,090.0

PLUG BACK — Report Date: 12/6/1951 00:00

Component	Top MD (ft)	Btm MD (ft)
CEMENT	7,090.0	7,100.0

CONDUCTOR CASING — Report Date: 9/21/1951 00:00

Item	OD (in)	Grade	Wt. (ppf)	TopMD (ft)	BtmMD (ft)
CASING JOINT(S)	26.000			10.0	39.0

SURFACE CASING — Report Date: 11/9/1951 00:00

Item	OD (in)	Grade	Wt. (ppf)	TopMD (ft)	BtmMD (ft)
CASING JOINT(S)	16.000	H-40	65.00	10.0	195.0

INTERMEDIATE CASING — Report Date: 11/14/1951 00:00

Item	OD (in)	Grade	Wt. (ppf)	TopMD (ft)	BtmMD (ft)
CASING JOINT(S)	10.750	J-55	45.50	10.0	38.0
CASING JOINT(S)	10.750	J-55	40.50	38.0	2,647.0
CASING JOINT(S)	10.750	J-55	45.50	2,647.0	3,220.0

PRODUCTION CASING — Report Date: 12/6/1951 00:00

Item	OD (in)	Grade	Wt. (ppf)	TopMD (ft)	BtmMD (ft)
CASING JOINT(S)	7.000	N-80	26.00	10.0	32.0
CASING JOINT(S)	7.000	N-80	23.00	32.0	5,726.0
CASING JOINT(S)	7.000	N-80	26.00	5,726.0	7,090.0

LINER — Report Date: 9/12/2000 00:00

Item	OD (in)	Grade	Wt. (ppf)	TopMD (ft)	BtmMD (ft)
TIE BACK	5.750	N-80	15.00	5,854.0	5,860.4
LINER HANGER PACKER	5.750	N-80	15.00	5,860.4	5,862.9
LANDING NIPPLE	5.000	N-80	15.00	5,862.9	5,864.7
LINER HANGER	5.000	N-80	15.00	5,864.7	5,871.2
CROSSOVER	5.000	N-80	15.00	5,871.2	5,875.3
CASING JOINT(S)	5.000	N-80	15.00	5,875.3	7,541.3
LANDING COLLAR	5.000			7,541.3	7,541.3
CASING JOINT(S)	5.000	N-80	15.00	7,541.3	7,590.2
	5.000			7,590.2	7,590.2
CASING JOINT(S)	5.000	N-80	15.00	7,590.2	7,637.2
GUIDE SHOE	5.000			7,637.2	7,637.9

Well: 346-34S S/T/R: 34S/30S/24E

CASING CEMENT DETAIL
- - -
Sfc Csg. Cmt Vol.: 450 sx
Hole Size: 22"
Top Job: No
Rtns to Sfc:
TTOC: Sfc
- - -

Interm Csg. Cmt Vol.: 700 sx
Hole Size: 15"
Top Job: No
Rtns to Sfc: No
TOC: 1560' (From Thermometric Survey)
- - -

Prod. Csg. Cmt Vol.: 500 sx
Hole Size: 9.75"
Top Job: No
Rtns to Sfc: No
TTOC: 4690'

Liner Cmt Vol.:
Hole Size:
Top Job:
Rtns to Sfc:
TTOC:
- - -
Top of Formation:
SS1: 2764'

Volume Behind Pipe:
1.3 Yield Assumed
Theoretical Calculations (TTOC)

OCCIDENTAL OF ELK HILLS INC

346-34S

Event: WELL MAINT - RIGLESS
Event End:
Sec. Reason:

Ground Level: 912.0ft
Datum: ORIGINAL KB @ 922.00ft (default)
API No.: 0402927663

Wellbore: ST 1
PBMD: 7,158.0ft
Btm TMD: 7,640.0ft
Spud Date: 9/21/1951 00:00
BH Coord X: 6,147,824.20uss ft
BH Coord Y: 2,288,425.92uss ft

Casing Shoes (ft) | Schematic (1/1/2009) | Openings Top/Btm/Type/Status

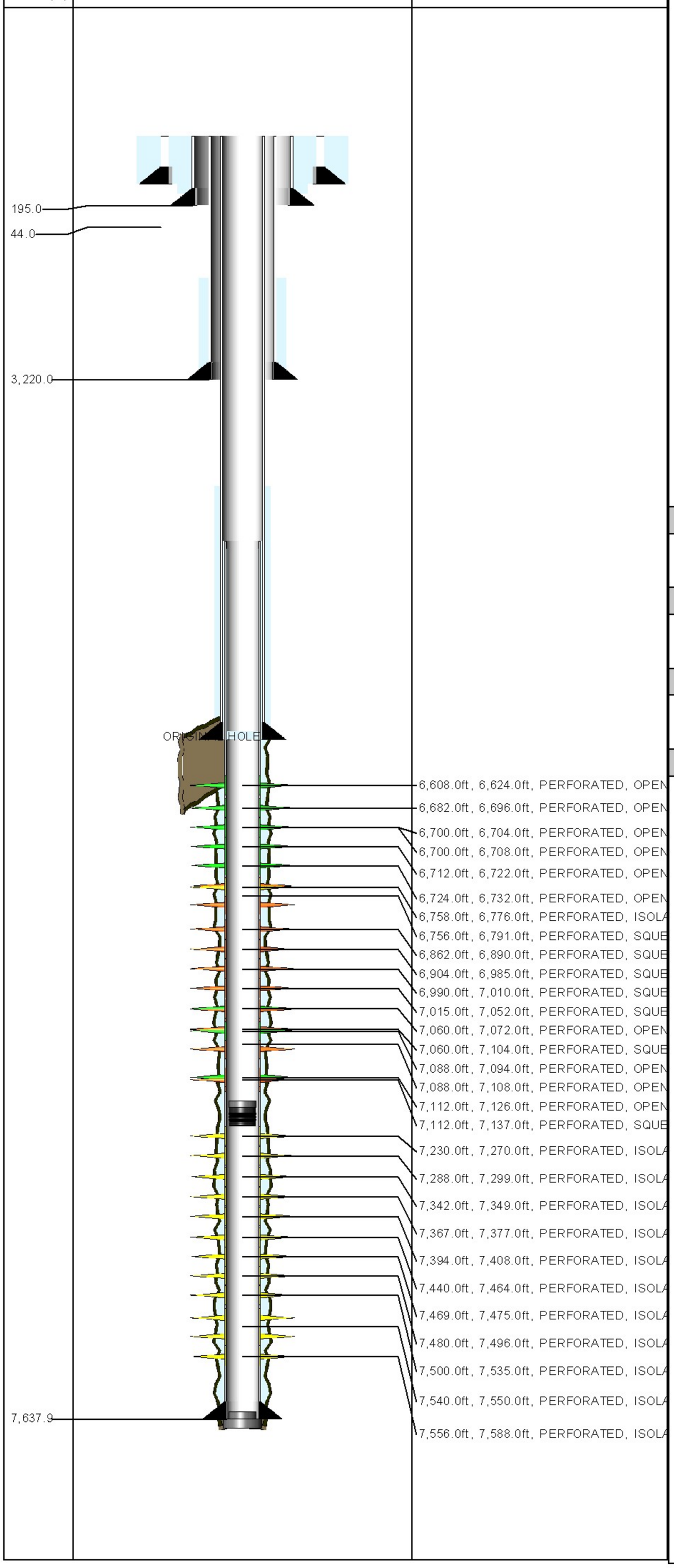

TUBING STRING W/ BYPASS TBG Report Date: 9/4/2003 00:00

Component	Top MD (ft)	Btm MD (ft)
TH-DBB	10.0	10.4
FATNIP	10.4	11.1
TBGJNT	11.1	42.5
PUPJNT	42.5	48.5
TBGJNT	48.5	2,317.9
GLM-V	2,317.9	2,326.3
TBGJNT	2,326.3	4,213.0
GLM-V	4,213.0	4,221.4
TBGJNT	4,221.4	5,602.5
GLM-V	5,602.5	5,611.1
TBGJNT	5,611.1	5,736.8
XO	5,736.8	5,737.9
TBGJNT	5,737.9	6,575.4
GLM-V	6,575.4	6,582.0
PUPJNT	6,582.0	6,592.1
ON-OFF	6,592.1	6,593.2
PKR-S	6,593.2	6,598.4
TBGJNT	6,598.4	6,629.7
PUPJNT	6,629.7	6,639.7
TBGJNT	6,639.7	6,732.9
SS-C	6,732.9	6,736.9
PUPJNT	6,736.9	6,746.9
PKR-S	6,746.9	6,752.0
TBGJNT	6,752.0	6,783.2
PUPJNT	6,783.2	6,791.2
PUPJNT	6,791.2	6,799.2
TBGJNT	6,799.2	7,016.7
SS-C	7,016.7	7,020.7
PUPJNT	7,020.7	7,030.8
PNIP-O	7,030.8	7,031.9
SA	7,031.9	7,032.0
PKR-S	7,032.0	7,038.1
PUPJNT	7,038.1	7,048.2
PNIP-O	7,048.2	7,049.6
WLREG	7,049.6	7,050.0

PLUG BACK Report Date: 1/30/2002 00:00

Component	Top MD (ft)	Btm MD (ft)
CEMENT	7,158.0	7,210.0

PLUG BACK Report Date: 3/9/2001 00:00

Component	Top MD (ft)	Btm MD (ft)
BP-DR	7,210.0	7,212.1

PLUG BACK Report Date: 9/22/2000 00:00

Component	Top MD (ft)	Btm MD (ft)
CEMENT	7,623.0	7,637.9

PLUG BACK Report Date: 9/12/2000 00:00

Component	Top MD (ft)	Btm MD (ft)
CEMENT	7,637.9	7,640.0

CONDUCTOR CASING Report Date: 9/21/1951 00:00

Item	OD (in)	Grade	Wt. (ppf)	TopMD (ft)	BtmMD (ft)
CASING JOINT(S)	26.000			10.0	39.0

SURFACE CASING Report Date: 11/9/1951 00:00

Item	OD (in)	Grade	Wt. (ppf)	TopMD (ft)	BtmMD (ft)
CASING JOINT(S)	16.000	H-40	65.00	10.0	195.0

INTERMEDIATE CASING Report Date: 11/14/1951 00:00

Item	OD (in)	Grade	Wt. (ppf)	TopMD (ft)	BtmMD (ft)
CASING JOINT(S)	10.750	J-55	45.50	10.0	38.0
CASING JOINT(S)	10.750	J-55	40.50	38.0	2,647.0
CASING JOINT(S)	10.750	J-55	45.50	2,647.0	3,220.0

PRODUCTION CASING Report Date: 12/6/1951 00:00

Item	OD (in)	Grade	Wt. (ppf)	TopMD (ft)	BtmMD (ft)
CASING JOINT(S)	7.000	N-80	26.00	10.0	32.0
CASING JOINT(S)	7.000	N-80	23.00	32.0	5,726.0
CASING JOINT(S)	7.000	N-80	26.00	5,726.0	7,090.0

LINER Report Date: 9/12/2000 00:00

Item	OD (in)	Grade	Wt. (ppf)	TopMD (ft)	BtmMD (ft)
TIE BACK	5.750	N-80	15.00	5,854.0	5,860.4
LINER HANGER PACKER	5.750	N-80	15.00	5,860.4	5,862.9
LANDING NIPPLE	5.000	N-80	15.00	5,862.9	5,864.7
LINER HANGER	5.000	N-80	15.00	5,864.7	5,871.2
CROSSOVER	5.000	N-80	15.00	5,871.2	5,875.3
CASING JOINT(S)	5.000	N-80	15.00	5,875.3	7,541.3
LANDING COLLAR	5.000			7,541.3	7,541.3
CASING JOINT(S)	5.000	N-80	15.00	7,541.3	7,590.2
	5.000			7,590.2	7,590.2
CASING JOINT(S)	5.000	N-80	15.00	7,590.2	7,637.2
GUIDE SHOE	5.000			7,637.2	7,637.9

Well: 346-34S-RD1 S/T/R: 34S/30S/24E

CASING CEMENT DETAIL
- - -
Sfc Csg. Cmt Vol.: 450 sx
Hole Size: 22"
Top Job: No
Rtns to Sfc:
TTOC: Sfc
- - -

Interm Csg. Cmt Vol.: 700 sx
Hole Size: 15"
Top Job: No
Rtns to Sfc: No
TOC: 1560' (From Thermometric Survey)
- - -

Prod. Csg. Cmt Vol.: 500 sx
Hole Size: 9.75"
Top Job: No
Rtns to Sfc: No
TTOC: 4690'

Liner Cmt Vol.: 231 cf
Hole Size: 6.125"
Top Job: No
Rtns to Sfc: No
TTOC: TOL
- - -
Top of Formation:
UBA: 6755'
BLW: 7166'

Volume Behind Pipe:
1.3 Yield Assumed
Theoretical Calculations (TTOC)

OCCIDENTAL OF ELK HILLS INC

346-35S

Event: RECOMPLETION
Event End: 7/7/2009 00:00
Sec. Reason: Sqz A Shale, REC into B Sand
End Status: FINISHED - SUCCESS
Well Classification: DEVELOPMENT

Ground Level: 771.0ft
Datum: ORIGINAL KB @ 781.00ft (default)
API No.: 0402927779

Wellbore: ST1
PBMD: 6,855.0ft
Btm TMD: 7,375.0ft
Spud Date: 5/25/1951 00:00
BH Coord X: 6,153,095.38uss ft
BH Coord Y: 2,288,446.09uss ft

Casing Shoes (ft) | Schematic (7/7/2009) | Openings Top/Btm/Type/Status

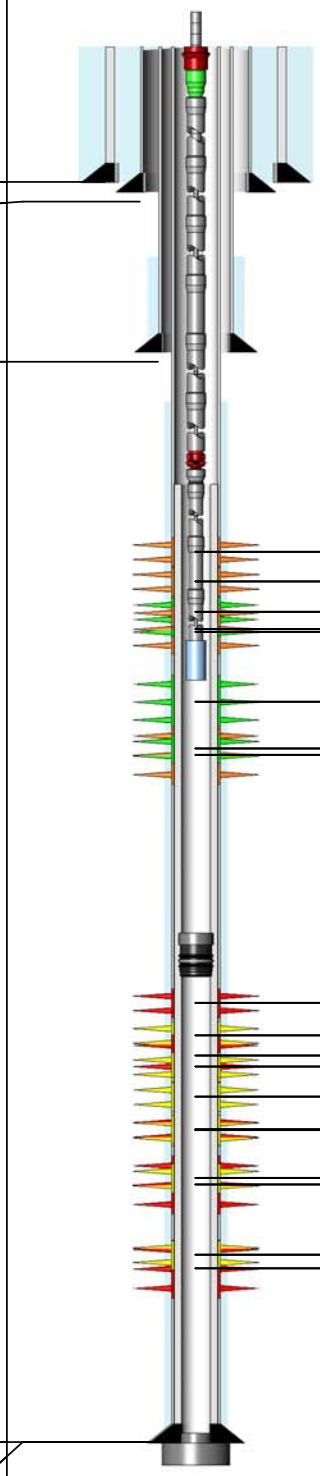

6,654.0ft, 6,674.0ft, PERFORATED, SQUEEZ
6,686.0ft, 6,713.0ft, PERFORATED, SQUEEZ
6,735.0ft, 6,743.0ft, PERFORATED, OPEN
6,737.0ft, 6,767.0ft, PERFORATED, SQUEEZ
6,755.0ft, 6,758.0ft, PERFORATED, OPEN
6,780.0ft, 6,804.0ft, PERFORATED, OPEN
6,812.0ft, 6,837.0ft, PERFORATED, OPEN
6,800.0ft, 6,844.0ft, PERFORATED, SQUEEZ
6,893.0ft, 6,943.0ft, PERFORATED, ABANDO
6,951.0ft, 6,977.0ft, PERFORATED, ISOLATE
6,963.0ft, 6,993.0ft, PERFORATED, ABANDO
6,982.0ft, 6,995.0ft, PERFORATED, ISOLATE
6,997.0ft, 7,013.0ft, PERFORATED, ISOLATE
7,020.0ft, 7,150.0ft, PERFORATED, ABANDO
7,020.0ft, 7,152.0ft, PERFORATED, ISOLATE
7,187.0ft, 7,243.0ft, PERFORATED, ISOLATE
7,165.0ft, 7,245.0ft, PERFORATED, ABANDO
7,267.0ft, 7,343.0ft, PERFORATED, ISOLATE
7,265.0ft, 7,345.0ft, PERFORATED, ABANDO

ROD STRING Report Date: 5/4/2009 00:00

Component	Top MD (ft)	Btm MD (ft)
POLROD	0.0	30.0
PNYROD	30.0	36.0
ROD	36.0	2,556.0
ROD	2,556.0	6,756.0
RSTBAR	6,756.0	6,759.0
INSPMP	6,759.0	6,783.0

TUBING STRING Report Date: 5/4/2009 00:00

Component	Top MD (ft)	Btm MD (ft)
TH-DBB	10.0	11.0
FATNIP	11.0	11.6
CAS	11.6	6,423.4
AC	6,423.4	6,425.8
XO	6,425.8	6,426.9
CAS	6,426.9	6,759.7
STNIP	6,759.7	6,760.8
PMPJKT	6,760.8	6,780.8

PLUG BACK Report Date: 8/1/2006 00:00

Component	Top MD (ft)	Btm MD (ft)
CEMENT	6,855.0	6,858.0
BP-DR	6,858.0	6,860.5

PLUG BACK Report Date: 1/26/1996 00:00

Component	Top MD (ft)	Btm MD (ft)
CEMENT	7,370.0	7,372.0

PLUG BACK Report Date: 7/12/1951 00:00

Component	Top MD (ft)	Btm MD (ft)
CEMENT	7,372.0	7,375.0

CONDUCTOR CASING Report Date: 5/25/1951 00:00

Item	OD (in)	Grade	Wt. (ppf)	TopMD (ft)	BtmMD (ft)
CASING JOINT(S)	26.000			10.0	40.0

SURFACE CASING Report Date: 6/15/1951 00:00

Item	OD (in)	Grade	Wt. (ppf)	TopMD (ft)	BtmMD (ft)
CASING JOINT(S)	16.000	H-40	65.00	10.0	204.0

INTERMEDIATE CASING Report Date: 6/21/1951 00:00

Item	OD (in)	Grade	Wt. (ppf)	TopMD (ft)	BtmMD (ft)
CASING JOINT(S)	10.750	J-55	45.50	10.0	73.0
CASING JOINT(S)	10.750	J-55	40.50	73.0	1,610.0
CASING JOINT(S)	10.750	J-55	45.50	1,610.0	3,205.0

PRODUCTION CASING Report Date: 7/12/1951 00:00

Item	OD (in)	Grade	Wt. (ppf)	TopMD (ft)	BtmMD (ft)
CASING JOINT(S)	7.000	N-80	26.00	10.0	54.0
CASING JOINT(S)	7.000	N-80	26.00	54.0	1,554.0
CASING JOINT(S)	7.000	N-80	23.00	1,554.0	7,372.0

INNER LINER Report Date: 1/25/1996 00:00

Item	OD (in)	Grade	Wt. (ppf)	TopMD (ft)	BtmMD (ft)
LINER HANGER	6.366	N-80	18.00	6,480.0	6,487.2
CASING JOINT(S)	5.000	N-80	18.00	6,487.2	7,370.0
FLOAT COLLAR	5.000	N-80	18.00	7,370.0	7,371.2
FLOAT SHOE	5.000	N-80	18.00	7,371.2	7,372.0

Well: 346-35S S/T/R: 35S/30S/24E

CASING CEMENT DETAIL
- - -
Sfc Csg. Cmt Vol.: 470 sx
Hole Size: 22.0" (16" Csg.)
Top Job: no
Rtns to Sfc: Yes
TTOC: Surface
- - -

Interm Csg. Cmt Vol.: 700 sx
Hole Size: 15.0" (10.750" Csg.)
Top Job: No
Rtns to Sfc: no
TTOC: 1285'
- - -

Prod. Csg. Cmt Vol.: 500
Hole Size: 9.75" (7" Csg.)
Top Job: no
Rtns to Sfc: no
TTOC: 4800'
- - -

Liner Cmt Vol.: 99 cuft
Hole Size: 7.0" (5" liner)
Top Job: No
Rtns to Sfc : No
TTOC: CBL indicates TOC behind linner 6598'
- - -
Top of Formation:
UBA: 6885'
BLW: 7349'

Volume Behind Pipe:
1.3 Yield Assumed
Theoretical Calculations (TTOC)

OCCIDENTAL OF ELK HILLS INC

346X-35S

Event: WELL MAINT - RIG
Event End: 3/14/2009 00:00
Sec. Reason: SANDED
End Status: FINISHED - SUCCESS
Well Classification: DEVELOPMENT

Ground Level: 767.7ft
Datum: ORIGINAL KB @ 790.70ft (default)
API No.: 0403026754

Wellbore: ORIGINAL HOLE
PBMD: 8,221.0ft
Btm TMD: 8,335.0ft
Spud Date: 2/10/2005 00:00
BH Coord X: 6,153,828.75uss ft
BH Coord Y: 2,290,053.71uss ft

Casing Shoes (ft) | Schematic (3/14/2009) | Openings Top/Btm/Type/Status

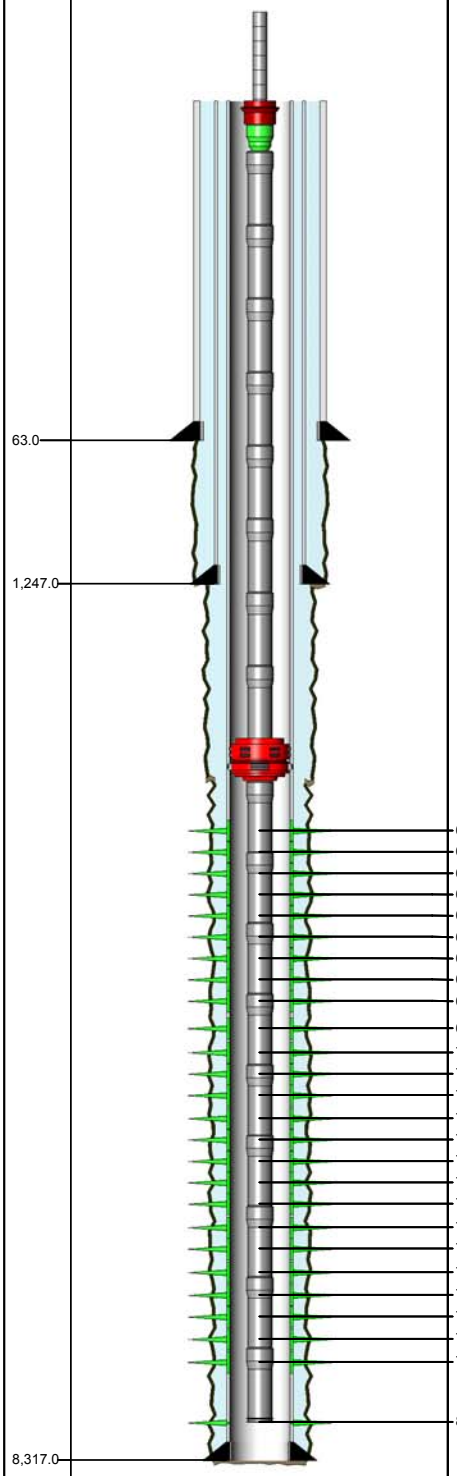

6,476.0ft, 6,488.0ft, PERFORATED, OPEN
6,502.0ft, 6,517.0ft, PERFORATED, OPEN
6,536.0ft, 6,540.0ft, PERFORATED, OPEN
6,544.0ft, 6,549.0ft, PERFORATED, OPEN
6,554.0ft, 6,562.0ft, PERFORATED, OPEN
6,566.0ft, 6,576.0ft, PERFORATED, OPEN
6,596.0ft, 6,600.0ft, PERFORATED, OPEN
6,612.0ft, 6,616.0ft, PERFORATED, OPEN
6,634.0ft, 6,638.0ft, PERFORATED, OPEN
6,958.0ft, 6,972.0ft, PERFORATED, OPEN
7,126.0ft, 7,150.0ft, PERFORATED, OPEN
7,164.0ft, 7,172.0ft, PERFORATED, OPEN
7,188.0ft, 7,204.0ft, PERFORATED, OPEN
7,302.0ft, 7,319.0ft, PERFORATED, OPEN
7,329.0ft, 7,364.0ft, PERFORATED, OPEN
7,384.0ft, 7,409.0ft, PERFORATED, OPEN
7,419.0ft, 7,433.0ft, PERFORATED, OPEN
7,444.0ft, 7,459.0ft, PERFORATED, OPEN
7,558.0ft, 7,600.0ft, PERFORATED, OPEN
7,610.0ft, 7,628.0ft, PERFORATED, OPEN
7,710.0ft, 7,722.0ft, PERFORATED, OPEN
7,773.0ft, 7,800.0ft, PERFORATED, OPEN
7,815.0ft, 7,872.0ft, PERFORATED, OPEN
7,892.0ft, 7,910.0ft, PERFORATED, OPEN
7,928.0ft, 7,940.0ft, PERFORATED, OPEN
8,010.0ft, 8,020.0ft, PERFORATED, OPEN

ROD STRING Report Date: 3/14/2009 00:00

Component	Top MD (ft)	Btm MD (ft)
POLROD	0.0	36.0
PNYROD	36.0	54.0
COROD	54.0	1,283.0
COROD	1,283.0	3,233.0
COROD	3,233.0	7,943.0
RSTBAR	7,943.0	7,947.0
ON-OFF	7,947.0	7,948.0
RSTBAR	7,948.0	7,952.0
INSPMP	7,952.0	7,976.0

TUBING STRING Report Date: 3/4/2009 00:00

Component	Top MD (ft)	Btm MD (ft)
TH-DBB	23.0	23.7
FATNIP	23.7	24.4
TBGJNT	24.4	6,179.9
AC	6,179.9	6,182.2
TBGJNT	6,182.2	7,977.0
PMPSH	7,977.0	7,977.7
TBGJNT	7,977.7	8,008.7
STCOLL	8,008.7	8,009.2

CONDUCTOR CASING Report Date: 2/8/2005 00:00

Item	OD (in)	Grade	Wt. (ppf)	TopMD (ft)	BtmMD (ft)
CASING JOINT(S)	14.000			23.0	63.0

SURFACE CASING Report Date: 2/12/2005 00:00

Item	OD (in)	Grade	Wt. (ppf)	TopMD (ft)	BtmMD (ft)
CASING JOINT(S)	9.625	K-55	36.00	23.0	1,198.7
	9.625	K-55	36.00	1,198.7	1,198.7
CASING JOINT(S)	9.625	K-55	36.00	1,198.7	1,245.9
GUIDE SHOE	9.625	K-55	36.00	1,245.9	1,247.0

PRODUCTION CASING Report Date: 2/25/2005 00:00

Item	OD (in)	Grade	Wt. (ppf)	TopMD (ft)	BtmMD (ft)
CASING JOINT(S)	7.000	K-55	23.00	23.0	4,982.2
CASING JOINT(S)	7.000	P-110	26.00	4,982.2	6,428.7
PUP JOINT	7.000	P-110	26.00	6,428.7	6,445.2
CASING JOINT(S)	7.000	P-110	26.00	6,445.2	8,221.3
FLOAT COLLAR	7.000	N-80	26.00	8,221.3	8,222.3
CASING JOINT(S)	7.000	P-110	26.00	8,222.3	8,315.8
FLOAT SHOE	7.000	N-80	26.00	8,315.8	8,317.0

Well: 346X-35S S/T/R: 35S/30S/24E

CASING CEMENT DETAIL
- - -
Sfc Csg. Cmt Vol.: 370 sx
Hole Size: 12.750
Top Job: No
Rtns to Sfc: 84 cuft
TOC: Surface
- - -

Interm Csg. Cmt Vol.:
Hole Size:
Top Job:
Rtns to Sfc:
TTOC:
- - -

Prod. Csg. Cmt Vol: 930 sx
Hole Size: 8.750
Top Job: No
Rtns to Sfc: 42 bbls
TOC: Surface
- - -

Liner Cmt Vol.:
Hole Size:
Top Job:
Rtns to Sfc :
TTOC:
- - -
Top of Formation:
UBA: 8260'
BLW: N/A

Volume Behind Pipe:
1.3 Yield Assumed
Theoretical Calculations (TTOC)

OCCIDENTAL OF ELK HILLS INC

347-34S

Event: WELL MAINT - RIGLESS
Event End:
Sec. Reason:

Ground Level: 908.0ft
Datum: ORIGINAL KB @ 929.00ft (default)
API No.: 0402984218

Wellbore: ORIGINAL HOLE
PBMD: 7,320.0ft
Btm TMD: 7,550.0ft
Spud Date: 5/1/1989 00:00
BH Coord X: 6,147,836.00uss ft
BH Coord Y: 2,287,663.00uss ft

Casing Shoes (ft) | Schematic (9/1/2008) | Openings Top/Btm/Type/Status

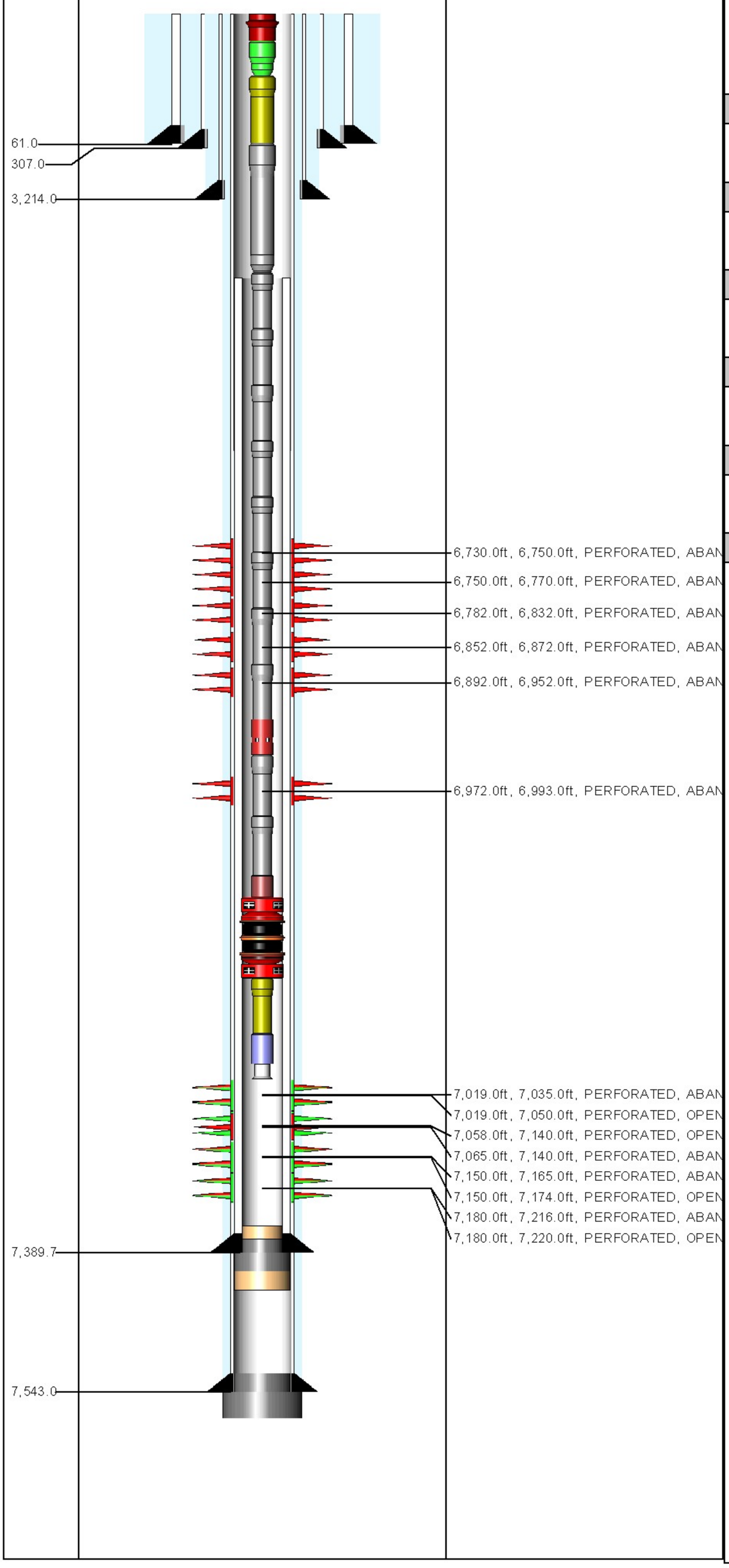

TUBING STRING Report Date: 7/12/2002 00:00

Component	Top MD (ft)	Btm MD (ft)
TH-DBB	21.0	21.6
FATNIP	21.6	23.2
PUPJNT	23.2	33.4
TBGJNT	33.4	6,366.4
XO	6,366.4	6,367.5
TBGJNT	6,367.5	6,960.6
SS-C	6,960.6	6,964.7
TBGJNT	6,964.7	6,996.1
ON-OFF	6,996.1	6,997.4
PKR-S	6,997.4	7,001.6
PUPJNT	7,001.6	7,007.7
NOGO-O	7,007.7	7,009.1
BELCOL	7,009.1	7,009.5

PLUG BACK Report Date: 5/6/2004 00:00

Component	Top MD (ft)	Btm MD (ft)
FILL	7,305.0	7,310.0

PLUG BACK Report Date: 7/3/2002 00:00

Component	Top MD (ft)	Btm MD (ft)
CEMENT	7,310.0	7,389.7

PLUG BACK Report Date: 6/29/2002 00:00

Component	Top MD (ft)	Btm MD (ft)
CEMENT	7,389.7	7,400.0

PLUG BACK Report Date: 6/10/1999 00:00

Component	Top MD (ft)	Btm MD (ft)
FILL	7,400.0	7,442.0

PLUG BACK Report Date: 10/15/1989 00:00

Component	Top MD (ft)	Btm MD (ft)
CEMENT	7,456.0	7,543.0

PLUG BACK Report Date: 8/12/1989 00:00

Component	Top MD (ft)	Btm MD (ft)
CEMENT	7,543.0	7,550.0

CONDUCTOR CASING Report Date: 5/1/1989 00:00

Item	OD (in)	Grade	Wt. (ppf)	TopMD (ft)	BtmMD (ft)
CASING JOINT(S)	20.000			21.0	61.0

SURFACE CASING Report Date: 7/19/1989 00:00

Item	OD (in)	Grade	Wt. (ppf)	TopMD (ft)	BtmMD (ft)
CASING JOINT(S)	13.375	H-40	48.00	21.0	307.0

INTERMEDIATE CASING Report Date: 7/25/1989 00:00

Item	OD (in)	Grade	Wt. (ppf)	TopMD (ft)	BtmMD (ft)
CASING JOINT(S)	9.625	K-55	40.00	21.0	3,214.0

PRODUCTION CASING Report Date: 8/12/1989 00:00

Item	OD (in)	Grade	Wt. (ppf)	TopMD (ft)	BtmMD (ft)
CASING JOINT(S)	7.000	K-55	23.00	21.0	5,321.1
CASING JOINT(S)	7.000	K-55	26.00	5,321.1	6,062.3
CASING JOINT(S)	7.000	N-80	29.00	6,062.3	6,710.5
FLAG JOINT	7.000	N-80	29.00	6,710.5	6,719.6
CASING JOINT(S)	7.000	N-80	29.00	6,719.6	7,452.9
FLOAT COLLAR	7.000	N-80	29.00	7,452.9	7,455.1
CASING JOINT(S)	7.000	N-80	29.00	7,455.1	7,540.6
FLOAT SHOE	7.000	N-80	29.00	7,540.6	7,543.0

INNER LINER Report Date: 6/28/2002 00:00

Item	OD (in)	Grade	Wt. (ppf)	TopMD (ft)	BtmMD (ft)
LINER HANGER PACKER	6.034			6,401.0	6,420.4
PUP JOINT	5.000			6,420.4	6,423.2
LINER HANGER	6.184			6,423.2	6,429.7
CROSSOVER	6.184	N-80		6,429.7	6,434.5
CASING JOINT(S)	5.000	N-80	15.00	6,434.5	7,320.0
LANDING COLLAR	5.000			7,320.0	7,320.0
CASING JOINT(S)	5.000	N-80	15.00	7,320.0	7,342.7
	5.000			7,342.7	7,342.7
CASING JOINT(S)	5.000	N-80	15.00	7,342.7	7,389.7
GUIDE SHOE	5.000			7,389.7	7,389.7

Well: 347-34S S/T/R: 34S/30S/24E

CASING CEMENT DETAIL
- - -
Sfc Csg. Cmt Vol.: 500 cf
Hole Size: 17.5"
Top Job: No
Rtns to Sfc: 62 cf
TOC: Sfc
- - -

Interm Csg. Cmt Vol.: 1535 cf
Hole Size: 12.25"
Top Job: No
Rtns to Sfc: 47 cf
TOC: Sfc
- - -

Prod. Csg. Cmt Vol.: 1850 cf
Hole Size: 8.75"
Top Job: No
Rtns to Sfc:
TTOC: Sfc

Liner Cmt Vol.: 100 cf
Hole Size: 5.5"
Top Job: No
Rtns to Sfc: No
TTOC: TOL
- - -
Top of Formation:
UBA: 6747'
BLW: 7227'

Volume Behind Pipe:
1.3 Yield Assumed
Theoretical Calculations (TTOC)

OCCIDENTAL OF ELK HILLS INC

347-35S

Event: RECOMPLETION
Event End: 4/15/2009 00:00
Sec. Reason:
End Status: FINISHED - SUCCESS
Well Classification: DEVELOPMENT

Ground Level: 729.0ft
Datum: ORIGINAL KB @ 746.00ft (default)
API No.: 0402980060

Wellbore: ST 1
PBMD: 7,345.0ft
Btm TMD: 7,435.0ft
Spud Date: 8/18/1987 00:00
BH Coord X: 6,152,937.31uss ft
BH Coord Y: 2,287,854.27uss ft

Casing Shoes (ft) | Schematic (4/15/2009) | Openings Top/Btm/Type/Status

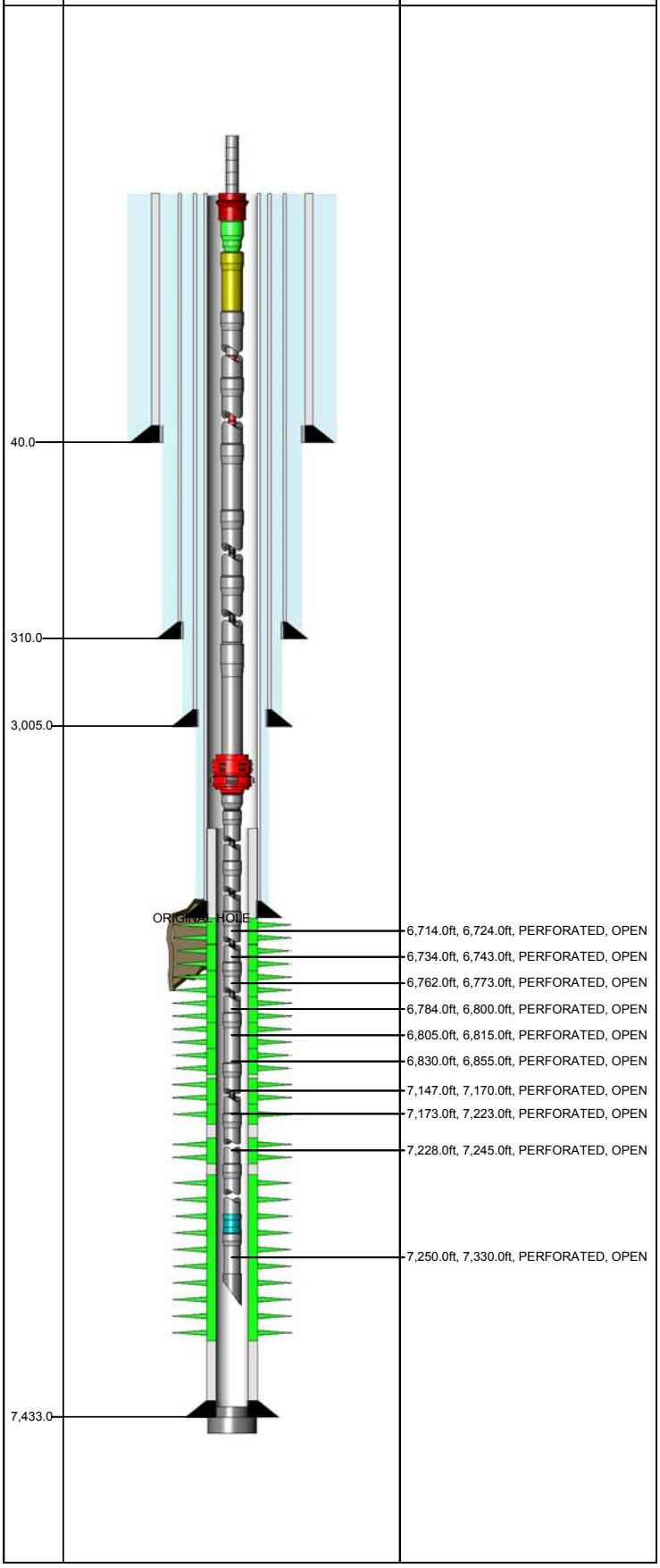

ROD STRING Report Date: 4/3/2009 00:00

Component	Top MD (ft)	Btm MD (ft)
POLROD	0.0	30.0
PNYROD	30.0	50.0
COROD	50.0	7,218.0
RSTBAR	7,218.0	7,222.0
SHRCPL	7,222.0	7,223.0
RSTBAR	7,223.0	7,227.0

TUBING STRING Report Date: 4/1/2009 00:00

Component	Top MD (ft)	Btm MD (ft)
TH-DBB	17.0	17.6
FATNIP	17.6	18.3
PUPJNT	18.3	26.4
CAS	26.4	648.3
CAS	648.3	6,090.1
AC	6,090.1	6,092.4
CAS	6,092.4	6,155.5
XO	6,155.5	6,156.6
CAS	6,156.6	7,268.3
STNIP	7,268.3	7,269.4
CAS	7,269.4	7,302.0
MULESH	7,302.0	7,302.4

PLUG BACK Report Date: 11/2/1992 00:00

Component	Top MD (ft)	Btm MD (ft)
CEMENT	7,345.0	7,433.0

PLUG BACK Report Date: 9/20/1992 00:00

Component	Top MD (ft)	Btm MD (ft)
CEMENT	7,433.0	7,435.0

CONDUCTOR CASING Report Date: 8/18/1987 00:00

Item	OD (in)	Grade	Wt. (ppf)	TopMD (ft)	BtmMD (ft)
CASING JOINT(S)	20.000			17.0	40.0

SURFACE CASING Report Date: 9/17/1987 00:00

Item	OD (in)	Grade	Wt. (ppf)	TopMD (ft)	BtmMD (ft)
CASING JOINT(S)	13.375	H-40	48.00	17.0	264.7
FLOAT COLLAR	13.375	H-40	48.00	264.7	264.8
CASING JOINT(S)	13.375	H-40	48.00	264.8	308.7
FLOAT SHOE	13.375	H-40	48.00	308.7	310.0

INTERMEDIATE CASING Report Date: 9/21/1987 00:00

Item	OD (in)	Grade	Wt. (ppf)	TopMD (ft)	BtmMD (ft)
CASING JOINT(S)	9.625	K-55	40.00	17.0	2,963.0
FLOAT COLLAR	9.625	K-55	40.00	2,963.0	2,963.0
CASING JOINT(S)	9.625	K-55	40.00	2,963.0	3,003.9
FLOAT SHOE	9.625	K-55	40.00	3,003.9	3,005.0

PRODUCTION CASING Report Date: 10/7/1987 00:00

Item	OD (in)	Grade	Wt. (ppf)	TopMD (ft)	BtmMD (ft)
CASING JOINT(S)	7.000	N-80	29.00	17.0	75.9
CASING JOINT(S)	7.000	K-55	23.00	75.9	4,898.3
CASING JOINT(S)	7.000	N-80	26.00	4,898.3	6,220.8
FLAG JOINT	7.000	N-80	26.00	6,220.8	6,244.7
CASING JOINT(S)	7.000	N-80	26.00	6,244.7	7,621.5
FLOAT COLLAR	7.000	N-80	26.00	7,621.5	7,623.6
CASING JOINT(S)	7.000	N-80	26.00	7,623.6	7,707.0
FLOAT SHOE	7.000	N-80	26.00	7,707.0	7,709.0

PRODUCTION LINER Report Date: 9/20/1992 00:00

Item	OD (in)	Grade	Wt. (ppf)	TopMD (ft)	BtmMD (ft)
TIE BACK	6.276		11.60	6,283.0	6,301.9
LINER HANGER	6.276		11.60	6,301.9	6,311.0
CASING JOINT(S)	4.500	N-80	11.60	6,311.0	7,342.0
CASING FLOAT COLLAR	4.500	N-80	11.60	7,342.0	7,344.0
CASING JOINT(S)	4.500	N-80	11.60	7,344.0	7,431.5
FLOAT SHOE	4.500	N-80	11.60	7,431.5	7,433.0

Well: 347-35S-RD1 S/T/R: 35S/30S/24E

CASING CEMENT DETAIL
- - -
Sfc Csg. Cmt Vol.: 350 cuft
Hole Size: 17.500"
Top Job: No
Rtns to Sfc: Yes
TOC: Surface
- - -

Interm Csg. Cmt Vol.: 1430 cuft
Hole Size: 12.250"
Top Job: No
Rtns to Sfc: Yes
TOC: Surface
- - -

Prod. Csg. Cmt Vol: 1800 cuft
Hole Size: 8.750
Top Job: No
Rtns to Sfc: None
TTOC: 4265'
- - -

Liner Cmt Vol.: 150 cuft
Hole Size: 6"
Top Job: No
Rtns to Sfc : N/A
TTOC: 6660' (CBL)
- - -
Top of Formation:
UBA: 6862'
BLW: 7335'

Volume Behind Pipe:
1.3 Yield Assumed
Theoretical Calculations (TTOC)

OCCIDENTAL OF ELK HILLS INC

347X-35S

Event: RECOMPLETION
Event End: 3/13/2008 00:00
Sec. Reason: ACID STIM
End Status:
Well Classification: DEVELOPMENT

Water Depth: 741.3ft
Datum: ORIGINAL KB @ 764.30ft (default)
API No.: 0403029435

Wellbore: ORIGINAL HOLE
PBMD: 8,857.0ft
Btm TMD: 8,960.0ft
Spud Date: 2/17/2006 00:00
BH Coord X: 6,154,949.56uss ft
BH Coord Y: 2,289,290.01uss ft

Casing Shoes (ft) | Schematic (3/13/2008) | Openings Top/Btm/Type/Status

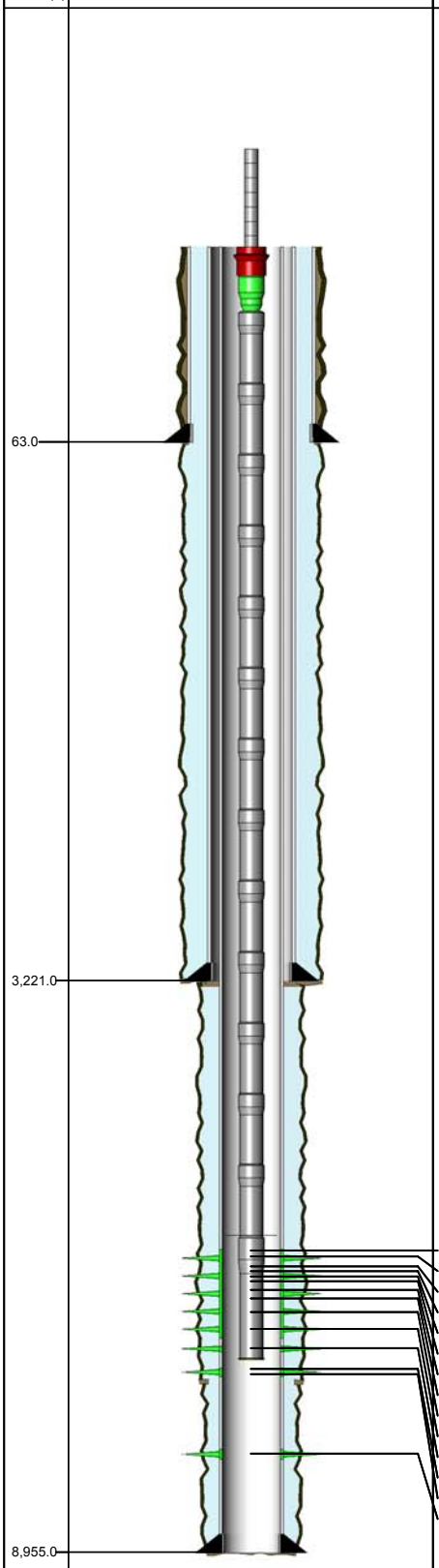

7,020.0ft, 7,040.0ft, PERFORATED, OPEN
7,055.0ft, 7,084.0ft, PERFORATED, OPEN
7,119.0ft, 7,146.0ft, PERFORATED, OPEN
7,156.0ft, 7,171.0ft, PERFORATED, OPEN
7,190.0ft, 7,204.0ft, PERFORATED, OPEN
7,218.0ft, 7,236.0ft, PERFORATED, OPEN
7,275.0ft, 7,289.0ft, PERFORATED, OPEN
7,296.0ft, 7,378.0ft, PERFORATED, OPEN
7,400.0ft, 7,446.0ft, PERFORATED, OPEN
7,476.0ft, 7,586.0ft, PERFORATED, OPEN
7,636.0ft, 7,672.0ft, PERFORATED, OPEN
7,776.0ft, 7,798.0ft, PERFORATED, OPEN
7,810.0ft, 7,830.0ft, PERFORATED, OPEN
8,296.0ft, 8,358.0ft, PERFORATED, OPEN

ROD STRING Report Date: 3/3/2008 00:00

Component	Top MD (ft)	Btm MD (ft)
POLROD	0.0	36.0
ROD	36.0	126.0
COROD	126.0	1,357.0
COROD	1,357.0	1,372.0
COROD	1,372.0	6,172.0
RSTBAR	6,172.0	6,176.0
ON-OFF	6,176.0	6,177.0
RSTBAR	6,177.0	6,181.0
INSPMP	6,181.0	6,205.0

TUBING STRING Report Date: 3/3/2008 00:00

Component	Top MD (ft)	Btm MD (ft)
TH-DBB	23.0	23.6
FATNIP	23.6	24.3
TBGJNT	24.3	6,929.2
AC	6,929.2	6,931.6
TBGJNT	6,931.6	7,713.9
STNIP	7,713.9	7,714.9
PUPJNT	7,714.9	7,725.1
STCOLL	7,725.1	7,725.5

CONDUCTOR CASING Report Date: 1/30/2006 00:00

Item	OD (in)	Grade	Wt. (ppf)	TopMD (ft)	BtmMD (ft)
CASING JOINT(S)	14.000			23.0	63.0

SURFACE CASING Report Date: 2/20/2006 00:00

Item	OD (in)	Grade	Wt. (ppf)	TopMD (ft)	BtmMD (ft)
CASING JOINT(S)	9.625	N-80	40.00	23.0	3,184.2
	9.625	N-80	40.00	3,184.2	3,184.3
CASING JOINT(S)	9.625	N-80	40.00	3,184.3	3,220.0
GUIDE SHOE	9.625	N-80	40.00	3,220.0	3,221.0

PRODUCTION CASING Report Date: 3/8/2006 00:00

Item	OD (in)	Grade	Wt. (ppf)	TopMD (ft)	BtmMD (ft)
CASING JOINT(S)	7.000	K-55	23.00	23.0	1,722.8
CASING JOINT(S)	7.000	J-55	23.00	1,722.8	1,839.0
CASING JOINT(S)	7.000	K-55	23.00	1,839.0	3,792.7
CASING JOINT(S)	7.000	N-80	23.00	3,792.7	6,183.2
FLAG JOINT	7.000	N-80	23.00	6,183.2	6,198.7
CASING JOINT(S)	7.000	N-80	23.00	6,198.7	8,857.1
CASING FLOAT COLLAR	7.000	J-55	23.00	8,857.1	8,858.9
CASING JOINT(S)	7.000	N-80	23.00	8,858.9	8,953.3
GUIDE SHOE	7.000	J-55	23.00	8,953.3	8,955.0

Well: 347X-35S S/T/R: 35S/30S/24E

CASING CEMENT DETAIL
- - -
Sfc Csg. Cmt Vol: 740 sx
Hole Size: 13.500"
Top Job: No
Rtns to Sfc: 25 bbls
TOC: Surface
- - -

Interm Csg. Cmt Vol.:
Hole Size:
Top Job:
Rtns to Sfc:
TTOC:
- - -

Prod. Csg. Cmt Vol: 644 sx
Hole Size: 8.750"
Top Job: No
Rtns to Sfc: No
TTOC: 3500'
- - -

Liner Cmt Vol.:
Hole Size:
Top Job:
Rtns to Sfc :
TTOC:
- - -
Top of Formation:
UBA: 8388'
BLW: N/A

Volume Behind Pipe:
1.3 Yield Assumed
Theoretical Calculations (TTOC)

OCCIDENTAL OF ELK HILLS INC

348-34S

Event: WELL MAINT - RIG
Event End: 7/1/2008 00:00
Sec. Reason: SPLIT

Ground Level: 911.0ft
Datum: ORIGINAL KB @ 923.00ft (default)
API No.: 0402927664

Wellbore: ORIGINAL HOLE
PBMD: 5,750.0ft
Btm TMD: 7,332.0ft
Spud Date: 5/9/1951 00:00
BH Coord X: 6,147,655.63uss ft
BH Coord Y: 2,286,718.67uss ft

Casing Shoes (ft)	Schematic (7/1/2008)	Openings Top/Btm/Type/Status

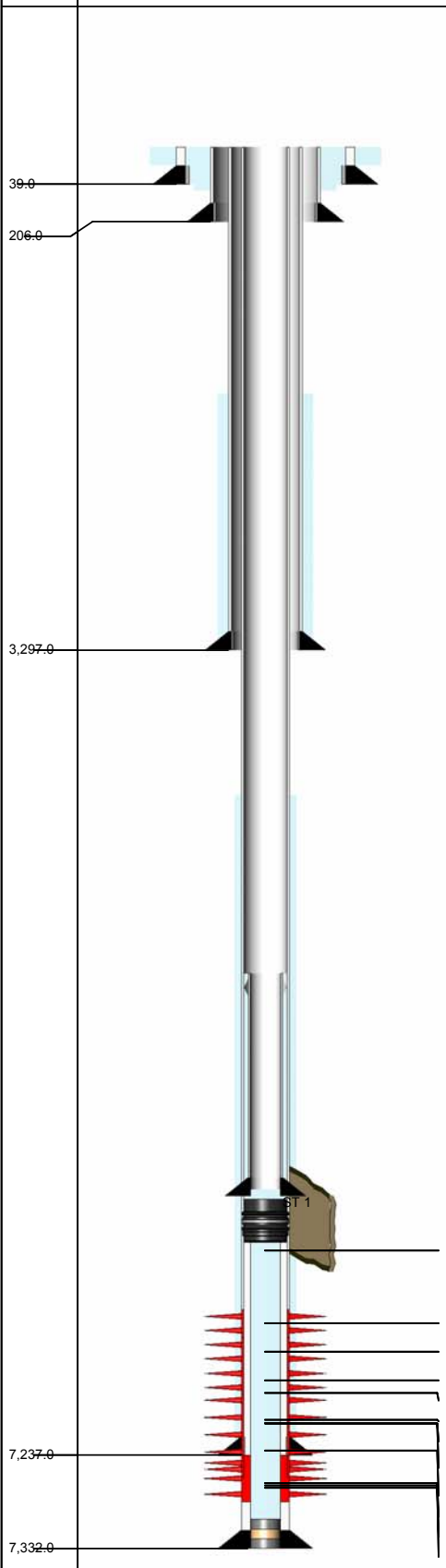

6,140.0ft, 6,141.0ft, WSO PERFS, SQUEEZED
6,710.0ft, 6,810.0ft, PERFORATED, ABANDONE
6,820.0ft, 6,945.0ft, PERFORATED, ABANDONE
6,965.0ft, 7,105.0ft, PERFORATED, ABANDONE
7,090.0ft, 7,105.0ft, PERFORATED, ABANDONE
7,150.0ft, 7,171.0ft, PERFORATED, ABANDONE
7,120.0ft, 7,200.0ft, PERFORATED, ABANDONE
7,120.0ft, 7,200.0ft, REPERFORATED, ABANDO
7,163.0ft, 7,289.0ft, PERFORATED, ABANDONE
7,237.0ft, 7,310.0ft, PERFORATED, ABANDONE
7,249.0ft, 7,310.0ft, PERFORATED, ABANDONE
7,286.0ft, 7,307.0ft, PERFORATED, ABANDONE

ROD STRING Report Date: 6/28/2008 00:00

Component	Top MD (ft)	Btm MD (ft)
POLROD	0.0	36.0
PNYROD	36.0	38.0
R-4PER	38.0	2,408.0
R-4PER	2,408.0	3,518.0
ROD	3,518.0	5,438.0
R-4PER	5,438.0	6,728.0
RSTBAR	6,728.0	6,732.0
INSPMP	6,732.0	6,756.0

TUBING STRING Report Date: 6/27/2008 00:00

Component	Top MD (ft)	Btm MD (ft)
TH-DBB	12.0	12.6
FATNIP	12.6	13.3
PUPJNT	13.3	25.6
TBGJNT	25.6	5,434.2
AC	5,434.2	5,436.6
XO	5,436.6	5,437.7
TBGJNT	5,437.7	6,765.9
STNIP	6,765.9	6,767.0
PUPJNT	6,767.0	6,769.2
WLREG	6,769.2	6,769.7

PLUG BACK Report Date: 10/7/2002 00:00

Component	Top MD (ft)	Btm MD (ft)
BP-DR	5,768.0	5,770.0

PLUG BACK Report Date: 5/17/2001 00:00

Component	Top MD (ft)	Btm MD (ft)
CEMENT	7,321.0	7,323.0

PLUG BACK Report Date: 5/4/2001 00:00

Component	Top MD (ft)	Btm MD (ft)
FILL	7,323.0	7,330.0

PLUG BACK Report Date: 11/26/1995 00:00

Component	Top MD (ft)	Btm MD (ft)
CEMENT	7,330.0	7,332.0

CONDUCTOR CASING Report Date: 5/9/1951 00:00

Item	OD (in)	Grade	Wt. (ppf)	TopMD (ft)	BtmMD (ft)
CASING JOINT(S)	26.000			12.0	39.0

SURFACE CASING Report Date: 6/18/1951 00:00

Item	OD (in)	Grade	Wt. (ppf)	TopMD (ft)	BtmMD (ft)
CASING JOINT(S)	16.000	H-40	65.00	12.0	206.0

INTERMEDIATE CASING Report Date: 6/24/1951 00:00

Item	OD (in)	Grade	Wt. (ppf)	TopMD (ft)	BtmMD (ft)
CASING JOINT(S)	10.750	J-55	45.50	12.0	53.0
CASING JOINT(S)	10.750	J-55	40.50	53.0	1,967.0
CASING JOINT(S)	10.750	J-55	45.50	1,967.0	3,297.0

PRODUCTION CASING Report Date: 7/19/1951 00:00

Item	OD (in)	Grade	Wt. (ppf)	TopMD (ft)	BtmMD (ft)
CASING JOINT(S)	7.000	N-80	26.00	12.0	68.0
CASING JOINT(S)	7.000	N-80	23.00	68.0	5,897.0
CASING JOINT(S)	7.000	N-80	26.00	5,897.0	7,237.0

INNER LINER Report Date: 11/22/1995 00:00

Item	OD (in)	Grade	Wt. (ppf)	TopMD (ft)	BtmMD (ft)
LINER HANGER	7.000	N-80	18.00	6,391.0	6,399.7
CASING JOINT(S)	5.000	N-80	18.00	6,399.7	6,614.6
CASING JOINT(S)	5.000	L-80	18.00	6,614.6	7,329.9
FLOAT COLLAR	5.000	L-80	18.00	7,329.9	7,331.2
GUIDE SHOE	5.000	L-80	18.00	7,331.2	7,332.0

LINER Report Date: 10/20/2002 00:00

Item	OD (in)	Grade	Wt. (ppf)	TopMD (ft)	BtmMD (ft)
TIE BACK RECEPTACLE	5.000			5,468.0	5,474.0
LINER HANGER LANDING COLLAR	5.000			5,474.0	5,481.0
LINER HANGER	6.276			5,481.0	5,488.1
PBR	5.000	N-80		5,488.1	5,491.1
CROSSOVER	5.000	N-80		5,491.1	5,492.1
CASING JOINT(S)	5.000	N-80	15.00	5,492.1	7,299.6
LANDING COLLAR	5.000	N-80		7,299.6	7,300.8
CASING JOINT(S)	5.000	N-80	15.00	7,300.8	7,394.7
FLOAT SHOE	5.000	N-80		7,394.7	7,397.5

A window was milled in 7" casing,
5750' - 5783'. The old hole was side tracked and
a new 6-1/8" hole drilled 5750' - 7400'.
A 5", 15# Liner was hung @ 7400', top @ 5468.
The liner was cemented with 265 CF of cement.

Well: 348-34S S/T/R: 34S/30S/24E

CASING CEMENT DETAIL
- - -
Sfc Csg. Cmt Vol.: 645ft3
Bit Size: 22"
Top Job:
Rtns to Sfc: not listed
TTOC: sfc
- - -

Interm Csg. Cmt Vol.: 1032 ft3
Bit Size: 9-3/4"
Top Job:
Rtns to Sfc: Yes
TOC: Sfc - temperature log
- - -

Prod. Csg. Cmt Vol.: 645 ft3
Bit Size: 7"
Top Job:
Rtns to Sfc: not indicated
TTOC: 4670'

Liner Cmt Vol.:
Hole Size:
Top Job:
Rtns to Sfc
TTOC:
- - -
Top of Formation:
UBA: 6797'
BLW: 7295'

Volume Behind Pipe:
1.3 Yield Assumed
Theoretical Calculations (TTOC)
tb.

OCCIDENTAL OF ELK HILLS INC

348-34S

Event: WELL MAINT - RIG
Event End: 7/1/2008 00:00
Sec. Reason: SPLIT

Ground Level: 911.0ft
Datum: ORIGINAL KB @ 923.00ft (default)
API No.: 0402927664

Wellbore: ST 1
PBMD: 6,850.0ft
Btm TMD: 7,400.0ft
Spud Date: 5/9/1951 00:00
BH Coord X: 6,147,935.22uss ft
BH Coord Y: 2,286,687.18uss ft

Casing Shoes (ft) | Schematic (7/1/2008) | Openings Top/Btm/Type/Status

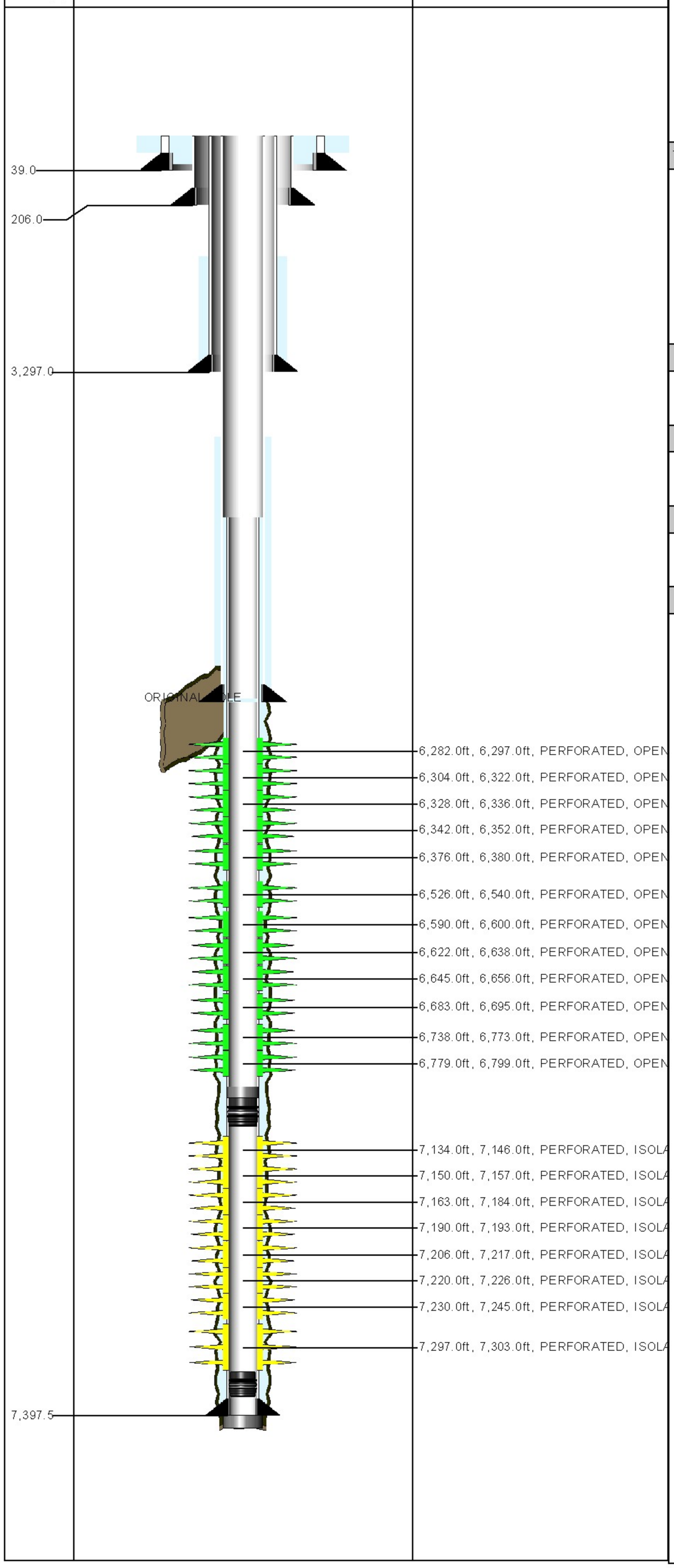

ROD STRING Report Date: 6/28/2008 00:00

Component	Top MD (ft)	Btm MD (ft)
POLROD	0.0	36.0
PNYROD	36.0	38.0
R-4PER	38.0	2,408.0
R-4PER	2,408.0	3,518.0
ROD	3,518.0	5,438.0
R-4PER	5,438.0	6,728.0
RSTBAR	6,728.0	6,732.0
INSPMP	6,732.0	6,756.0

TUBING STRING Report Date: 6/27/2008 00:00

Component	Top MD (ft)	Btm MD (ft)
TH-DBB	12.0	12.6
FATNIP	12.6	13.3
PUPJNT	13.3	25.6
TBGJNT	25.6	5,434.2
AC	5,434.2	5,436.6
XO	5,436.6	5,437.7
TBGJNT	5,437.7	6,765.9
STNIP	6,765.9	6,767.0
PUPJNT	6,767.0	6,769.2
WLREG	6,769.2	6,769.7

PLUG BACK Report Date: 12/27/2004 00:00

Component	Top MD (ft)	Btm MD (ft)
CEMENT	6,850.0	6,860.0

PLUG BACK Report Date: 12/27/2004 00:00

Component	Top MD (ft)	Btm MD (ft)
BP-RET	6,860.0	6,862.0

PLUG BACK Report Date: 11/20/2002 00:00

Component	Top MD (ft)	Btm MD (ft)
BP-DR	7,339.0	7,341.5

PLUG BACK Report Date: 10/20/2002 00:00

Component	Top MD (ft)	Btm MD (ft)
CEMENT	7,397.5	7,400.0

CONDUCTOR CASING Report Date: 5/9/1951 00:00

Item	OD (in)	Grade	Wt. (ppf)	TopMD (ft)	BtmMD (ft)
CASING JOINT(S)	26.000			12.0	39.0

SURFACE CASING Report Date: 6/18/1951 00:00

Item	OD (in)	Grade	Wt. (ppf)	TopMD (ft)	BtmMD (ft)
CASING JOINT(S)	16.000	H-40	65.00	12.0	206.0

INTERMEDIATE CASING Report Date: 6/24/1951 00:00

Item	OD (in)	Grade	Wt. (ppf)	TopMD (ft)	BtmMD (ft)
CASING JOINT(S)	10.750	J-55	45.50	12.0	53.0
CASING JOINT(S)	10.750	J-55	40.50	53.0	1,967.0
CASING JOINT(S)	10.750	J-55	45.50	1,967.0	3,297.0

PRODUCTION CASING Report Date: 7/19/1951 00:00

Item	OD (in)	Grade	Wt. (ppf)	TopMD (ft)	BtmMD (ft)
CASING JOINT(S)	7.000	N-80	26.00	12.0	68.0
CASING JOINT(S)	7.000	N-80	23.00	68.0	5,897.0
CASING JOINT(S)	7.000	N-80	26.00	5,897.0	7,237.0

LINER Report Date: 10/20/2002 00:00

Item	OD (in)	Grade	Wt. (ppf)	TopMD (ft)	BtmMD (ft)
TIE BACK RECEPTACLE	5.000			5,468.0	5,474.0
LINER HANGER LANDING COLLAR	5.000			5,474.0	5,481.0
LINER HANGER	6.276			5,481.0	5,488.1
PBR	5.000	N-80		5,488.1	5,491.1
CROSSOVER	5.000	N-80		5,491.1	5,492.1
CASING JOINT(S)	5.000	N-80	15.00	5,492.1	7,299.6
LANDING COLLAR	5.000	N-80		7,299.6	7,300.8
CASING JOINT(S)	5.000	N-80	15.00	7,300.8	7,394.7
FLOAT SHOE	5.000	N-80		7,394.7	7,397.5

A window was milled in 7" casing,
5750' - 5783'. The old hole was side tracked and a new 6-1/8" hole drilled 5750' - 7400'.
A 5", 15# Liner was hung @ 7400', top @ 5468.
The liner was cemented with 265 CF of cement.
The liner was perforated, at intervals,
7134' - 7245'w/ 6 JHPF.

Well: 348-34S-RD1 S/T/R: 34S/30S/24E

CASING CEMENT DETAIL
- - -
Sfc Csg. Cmt Vol.: 645ft3
Bit Size: 22"
Top Job:
Rtns to Sfc: not listed
TTOC: sfc
- - -

Interm Csg. Cmt Vol.: 1032 ft3
Bit Size: 9-3/4"
Top Job:
Rtns to Sfc: Yes
TOC: Sfc - temperature log
- - -

Prod. Csg. Cmt Vol.: 645 ft3
Bit Size: 7"
Top Job:
Rtns to Sfc: not indicated
TTOC: 4670'

Liner Cmt Vol.: 265 ft3
Hole Size: 6-18"
Top Job:
Rtns to Sfc: no
TTOC: 654'
- - -
Top of Formation:
UBA: 6822'
BLW: 7311'

Volume Behind Pipe:
1.3 Yield Assumed
Theoretical Calculations (TTOC) tb.

Event: WELL MAINT - RIG
Event End: 7/14/2006 00:00
Sec. Reason:
End Status: FINISHED - SUCCESS
Well Classification: DEVELOPMENT

OCCIDENTAL OF ELK HILLS INC

348-35S

Ground Level: 764.0ft
Datum: ORIGINAL KB @ 774.00ft (default)
API No.: 0402927780

Wellbore: ORIGINAL HOLE
PBMD: 7,431.0ft
Btm TMD: 7,515.0ft
Spud Date: 3/27/1950 00:00
BH Coord X: 6,153,136.94uss ft
BH Coord Y: 2,286,966.20uss ft

Casing Shoes (ft) | Schematic (8/1/2006) | Openings Top/Btm/Type/Status

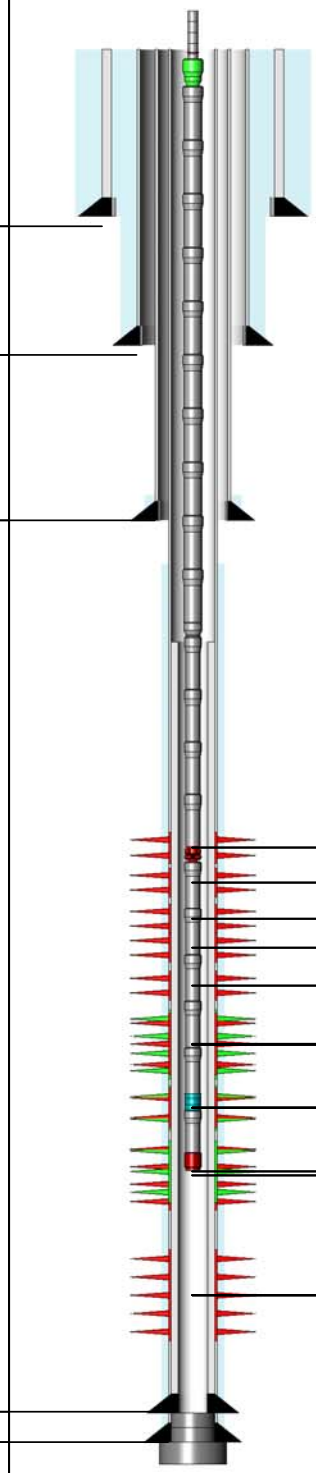

6,948.0ft, 7,005.0ft, PERFORATED, ABANDONED
7,020.0ft, 7,045.0ft, PERFORATED, ABANDONED
7,065.0ft, 7,080.0ft, PERFORATED, ABANDONED
7,080.0ft, 7,140.0ft, PERFORATED, ABANDONED
7,155.0ft, 7,210.0ft, PERFORATED, ABANDONED
7,220.0ft, 7,265.0ft, PERFORATED, ABANDONED
7,218.0ft, 7,270.0ft, PERFORATED, OPE
7,280.0ft, 7,300.0ft, PERFORATED, ABANDONED
7,297.0ft, 7,302.0ft, PERFORATED, OPE
7,310.0ft, 7,350.0ft, PERFORATED, ABANDONED
7,319.0ft, 7,344.0ft, PERFORATED, OPE
7,380.0ft, 7,420.0ft, PERFORATED, ABANDONED
7,380.0ft, 7,420.0ft, REPERFORATED, O

ROD STRING Report Date: 10/17/2005 00:00

Component	Top MD (ft)	Btm MD (ft)
POLROD	0.0	30.0
PNYROD	30.0	56.0
ROD	56.0	2,696.0
ROD	2,696.0	6,716.0
ROD	6,716.0	7,256.0
RSTBAR	7,256.0	7,260.0
INSPMP	7,260.0	7,284.0

TUBING STRING Report Date: 10/17/2005 00:00

Component	Top MD (ft)	Btm MD (ft)
TH-DBB	10.0	10.7
FATNIP	10.7	11.4
TBGJNT	11.4	6,047.7
XO	6,047.7	6,048.8
TBGJNT	6,048.8	6,995.0
AC	6,995.0	6,999.4
TBGJNT	6,999.4	7,285.5
STNIP	7,285.5	7,286.6
TBGJNT	7,286.6	7,319.2
STCOLL	7,319.2	7,319.6

PLUG BACK Report Date: 6/6/2001 00:00

Component	Top MD (ft)	Btm MD (ft)
CEMENT	7,450.0	7,451.0

PLUG BACK Report Date: 6/6/1950 00:00

Component	Top MD (ft)	Btm MD (ft)
CEMENT	7,451.0	7,514.0

PLUG BACK Report Date: 6/6/1950 00:00

Component	Top MD (ft)	Btm MD (ft)
CEMENT	7,514.0	7,515.0

CONDUCTOR CASING Report Date: 3/27/1950 00:00

Item	OD (in)	Grade	Wt. (ppf)	TopMD (ft)	BtmMD (ft)
CASING JOINT(S)	26.000			10.0	38.0

SURFACE CASING Report Date: 4/27/1950 00:00

Item	OD (in)	Grade	Wt. (ppf)	TopMD (ft)	BtmMD (ft)
CASING JOINT(S)	16.000	H-40	65.00	10.0	195.0

INTERMEDIATE CASING Report Date: 5/3/1950 00:00

Item	OD (in)	Grade	Wt. (ppf)	TopMD (ft)	BtmMD (ft)
CASING JOINT(S)	10.750	J-55	45.50	10.0	68.0
CASING JOINT(S)	10.750	J-55	40.50	68.0	1,974.0
CASING JOINT(S)	10.750	J-55	45.50	1,974.0	3,176.0

PRODUCTION CASING Report Date: 6/6/1950 00:00

Item	OD (in)	Grade	Wt. (ppf)	TopMD (ft)	BtmMD (ft)
CASING JOINT(S)	7.000	N-80	26.00	10.0	61.0
CASING JOINT(S)	7.000	N-80	23.00	61.0	5,707.0
CASING JOINT(S)	7.000	N-80	26.00	5,707.0	7,514.0

LINER Report Date: 6/6/2001 00:00

Item	OD (in)	Grade	Wt. (ppf)	TopMD (ft)	BtmMD (ft)
LINER HANGER LANDING COLLAR	6.276		26.00	6,199.0	6,205.3
LINER HANGER	6.276		26.00	6,205.3	6,209.8
CASING JOINT(S)	5.000	P-110	18.00	6,209.8	7,404.7
LANDING COLLAR	5.000	P-110	18.00	7,404.7	7,405.5
CASING JOINT(S)	5.000	P-110	18.00	7,405.5	7,447.9
FLOAT SHOE	5.000	P-110	18.00	7,447.9	7,450.0

Well: 348-35S S/T/R: 35S/30S/24E

CASING CEMENT DETAIL
- - -
Sfc Csg. Cmt Vol: 500 sx
Hole Size: 22.000"
Top Job: No
Rtns to Sfc: Yes
TOC: Surface
- - -

Interm Csg. Cmt Vol: 700 sx
Hole Size: 15.000"
Top Job: No
Rtns to Sfc: No
TTOC: 1400' by T.S.
- - -

Prod. Csg. Cmt Vol: 200 sx plus 200 sx more through pers at 6163'
Hole Size: 9.625"
Top Job: No
Rtns to Sfc: No
TTOC: 5900' by CBL
- - -

Liner Cmt Vol: 174 cuft
Hole Size: 7" casing
Top Job: No
Rtns to Sfc: No
TTOC: at top of liner by CBL
- - -
Top of Formation:
UBA: 6974'
BLW: 7440'

Volume Behind Pipe:
1.3 Yield Assumed
Theoretical Calculations (TTOC)

OCCIDENTAL OF ELK HILLS INC

348X-34S

Event: WELL MAINT - RIG
Event End: 7/15/2009 00:00
Sec. Reason:

Ground Level: 865.7ft
Datum: ORIGINAL KB @ 886.70ft (default)
API No.: 0403020338

Wellbore: ORIGINAL HOLE
PBMD: 7,105.0ft
Btm TMD: 7,285.0ft
Spud Date: 6/22/2002 00:00
BH Coord X: 6,148,052.68uss ft
BH Coord Y: 2,287,294.13uss ft

Casing Shoes (ft) | Schematic (8/1/2009) | Openings Top/Btm/Type/Status

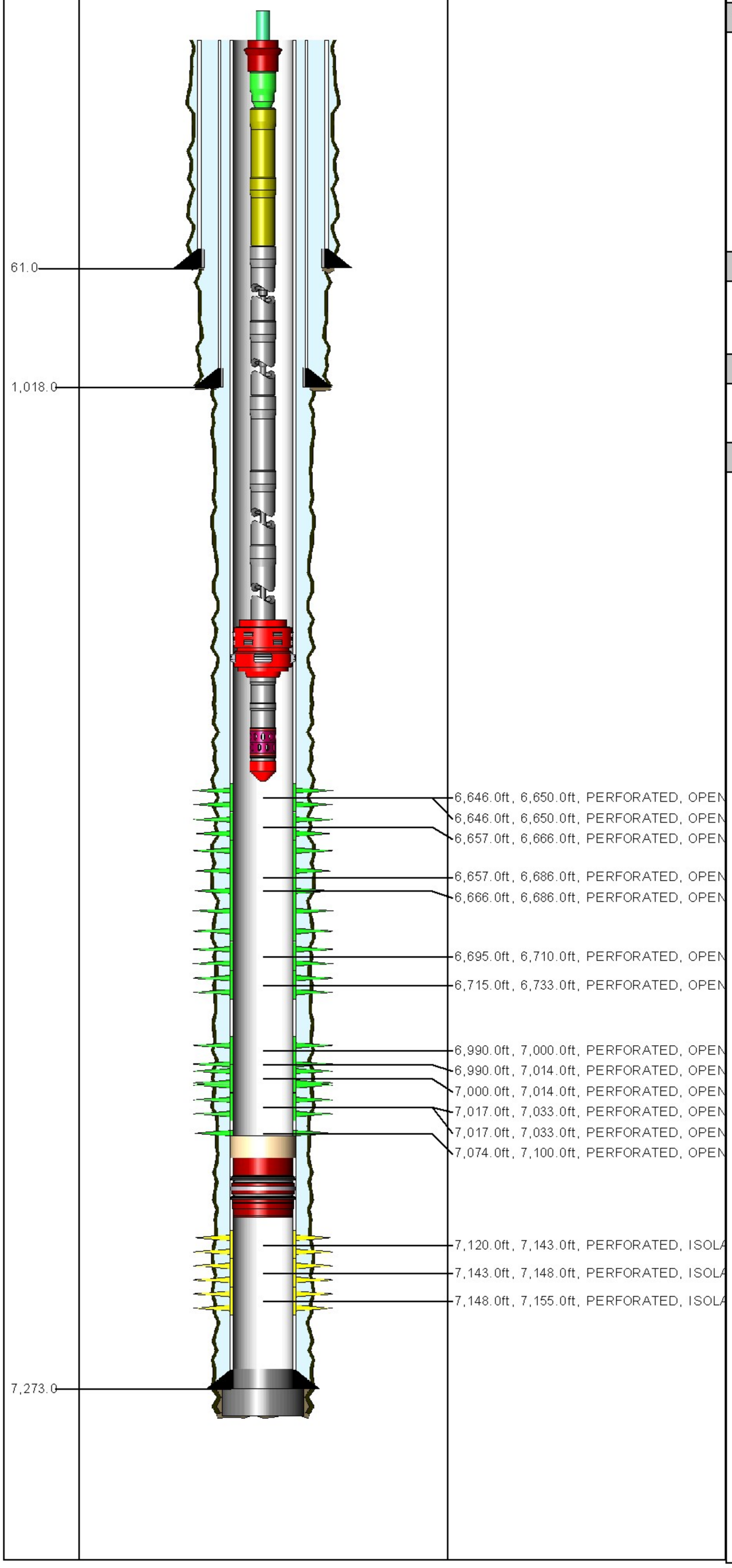

ROD STRING Report Date: 4/6/2009 00:00

Component	Top MD (ft)	Btm MD (ft)
POLRDL	0.0	36.0
R-4PER	36.0	1,356.0
ROD	1,356.0	2,376.0
ROD	2,376.0	4,116.0
R-4PER	4,116.0	6,516.0
RSTBAR	6,516.0	6,520.0
INSPMP	6,520.0	6,545.0

TUBING STRING Report Date: 4/4/2009 00:00

Component	Top MD (ft)	Btm MD (ft)
TH-DBB	21.0	21.7
FATNIP	21.7	22.3
PUPJNT	22.3	28.5
PUPJNT	28.5	34.7
CAS	34.7	6,397.3
AC	6,397.3	6,399.6
CAS	6,399.6	6,527.0
STNIP	6,527.0	6,528.1
CAS	6,528.1	6,589.4
PRFNIP	6,589.4	6,593.6
CAS	6,593.6	6,624.6
BULPLG	6,624.6	6,625.4

PLUG BACK Report Date: 12/3/2003 00:00

Component	Top MD (ft)	Btm MD (ft)
SAND	7,100.0	7,103.0
BRP	7,103.0	7,106.6

PLUG BACK Report Date: 7/15/2002 00:00

Component	Top MD (ft)	Btm MD (ft)
CEMENT	7,175.0	7,273.0

PLUG BACK Report Date: 7/6/2002 00:00

Component	Top MD (ft)	Btm MD (ft)
CEMENT	7,273.0	7,285.0

CONDUCTOR CASING Report Date: 6/21/2002 00:00

Item	OD (in)	Grade	Wt. (ppf)	TopMD (ft)	BtmMD (ft)
CASING JOINT(S)	14.000		49.70	21.0	61.0

SURFACE CASING Report Date: 6/23/2002 00:00

Item	OD (in)	Grade	Wt. (ppf)	TopMD (ft)	BtmMD (ft)
CASING JOINT(S)	9.625	K-55	36.00	21.0	972.3
	9.625			972.3	972.3
CASING JOINT(S)	9.625	K-55	36.00	972.3	1,016.9
GUIDE SHOE	9.625	K-55		1,016.9	1,018.0

PRODUCTION CASING Report Date: 7/6/2002 00:00

Item	OD (in)	Grade	Wt. (ppf)	TopMD (ft)	BtmMD (ft)
CASING JOINT(S)	7.000	N-80	26.00	21.0	6,312.3
FLAG JOINT	7.000	N-80	26.00	6,312.3	6,332.3
CASING JOINT(S)	7.000	N-80	26.00	6,332.3	7,175.6
FLOAT COLLAR	7.000			7,175.6	7,177.0
CASING JOINT(S)	7.000	N-80	26.00	7,177.0	7,271.5
FLOAT SHOE	7.000			7,271.5	7,273.0

Well: 348X-34S S/T/R: 34S/30S/24E

CASING CEMENT DETAIL
- - -
Sfc Csg. Cmt Vol.: 560 cf
Hole Size: 12.25"
Top Job: Yes
Rtns to Sfc: 28 cf
TOC: Sfc
- - -

Interm Csg. Cmt Vol.:
Hole Size:
Top Job:
Rtns to Sfc:
TOC:
- - -

Prod. Csg. Cmt Vol.: 1794 cf
Hole Size: 8.75"
Top Job: No
Rtns to Sfc: 67 cf
TOC: Sfc
- - -

Liner Cmt Vol.:
Hole Size:
Top Job:
Rtns to Sfc:
TTOC:
- - -
Top of Formation:
UBA: 6710'
BLW: 7173'

Volume Behind Pipe:
1.3 Yield Assumed
Theoretical Calculations (TTOC)

Event: WELL MAINT - RIG
Event End: 9/26/2007 00:00
Sec. Reason: SCALED
End Status: FINISHED - SUCCESS
Well Classification: DEVELOPMENT

OCCIDENTAL OF ELK HILLS INC

348XH-35S

Ground Level: 794.2ft
Datum: ORIGINAL KB @ 817.20ft (default)
API No.: 0403024824

Wellbore: ORIGINAL HOLE
PBMD: 7,563.0ft
Btm TMD: 8,601.0ft
Spud Date: 7/2/2004 00:00
BH Coord X: 6,155,024.72uss ft
BH Coord Y: 2,288,134.32uss ft

Casing Shoes (ft) | Schematic (10/1/2007) | Openings Top/Btm/Type/Status

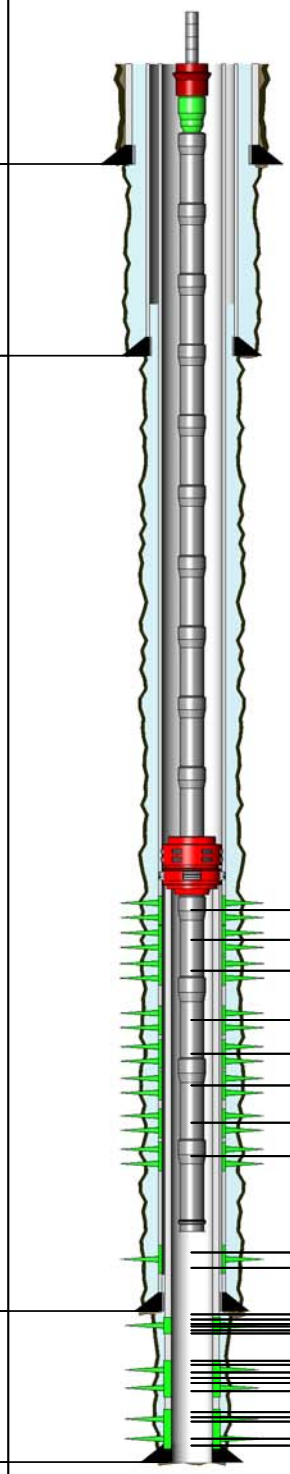

6,574.0ft, 6,599.0ft, PERFORATED, OPEN
6,608.0ft, 6,658.0ft, PERFORATED, OPEN
6,674.0ft, 6,690.0ft, PERFORATED, OPEN
6,874.0ft, 6,890.0ft, PERFORATED, OPEN
6,928.0ft, 6,960.0ft, PERFORATED, OPEN
6,980.0ft, 7,002.0ft, PERFORATED, OPEN
7,057.0ft, 7,088.0ft, PERFORATED, OPEN
7,110.0ft, 7,150.0ft, PERFORATED, OPEN
7,312.0ft, 7,398.0ft, PERFORATED, OPEN
7,418.0ft, 7,475.0ft, PERFORATED, OPEN
7,722.0ft, 7,723.0ft, SQZ PERFS, SQUEE
7,738.0ft, 7,766.0ft, PERFORATED, OPEN
7,774.0ft, 7,785.0ft, PERFORATED, OPEN
7,792.0ft, 7,793.0ft, SQZ PERFS, SQUEE
7,800.0ft, 7,834.0ft, PERFORATED, OPEN
7,835.0ft, 7,836.0ft, SQZ PERFS, SQUEE
7,996.0ft, 7,997.0ft, SQZ PERFS, SQUEE
7,995.0ft, 8,046.0ft, PERFORATED, OPEN
8,057.0ft, 8,076.0ft, PERFORATED, OPEN
8,090.0ft, 8,106.0ft, PERFORATED, OPEN
8,122.0ft, 8,136.0ft, PERFORATED, OPEN
8,145.0ft, 8,210.0ft, PERFORATED, OPEN
8,282.0ft, 8,320.0ft, PERFORATED, OPEN
8,330.0ft, 8,335.0ft, PERFORATED, OPEN
8,355.0ft, 8,360.0ft, PERFORATED, OPEN
8,452.0ft, 8,466.0ft, PERFORATED, OPEN
8,484.0ft, 8,516.0ft, PERFORATED, OPEN

ROD STRING Report Date: 9/26/2007 00:00

Component	Top MD (ft)	Btm MD (ft)
POLROD	0.0	36.0
ROD	36.0	2,166.0
R-4PER	2,166.0	3,456.0
ROD	3,456.0	5,886.0
R-4PER	5,886.0	7,176.0
RSTBAR	7,176.0	7,180.0
INSPMP	7,180.0	7,204.0

TUBING STRING Report Date: 9/25/2007 00:00

Component	Top MD (ft)	Btm MD (ft)
TH-DBB	23.0	23.7
FATNIP	23.7	24.3
TBGJNT	24.3	6,563.6
AC	6,563.6	6,565.9
TBGJNT	6,565.9	7,196.7
STNIP	7,196.7	7,197.8
CAS	7,197.8	7,229.0
STCOLL	7,229.0	7,229.4

CONDUCTOR CASING Report Date: 6/1/2004 00:00

Item	OD (in)	Grade	Wt. (ppf)	TopMD (ft)	BtmMD (ft)
CASING JOINT(S)	14.000			23.0	63.0

SURFACE CASING Report Date: 7/3/2004 00:00

Item	OD (in)	Grade	Wt. (ppf)	TopMD (ft)	BtmMD (ft)
CASING JOINT(S)	9.625	J-55	36.00	23.0	1,013.7
	9.625	J-55	36.00	1,013.7	1,013.7
CASING JOINT(S)	9.625	J-55	36.00	1,013.7	1,058.0
GUIDE SHOE	9.625	J-55	36.00	1,058.0	1,059.0

INTERMEDIATE CASING Report Date: 7/15/2004 00:00

Item	OD (in)	Grade	Wt. (ppf)	TopMD (ft)	BtmMD (ft)
CASING HANGER	7.000	K-55	23.00	23.0	27.2
CASING JOINT(S)	7.000	K-55	23.00	27.2	5,277.4
PUP JOINT	7.000	K-55	23.00	5,277.4	5,297.5
CASING JOINT(S)	7.000	N-80	26.00	5,297.5	7,612.3
FLOAT COLLAR	7.000	N-80	26.00	7,612.3	7,613.3
CASING JOINT(S)	7.000	N-80	26.00	7,613.3	7,700.7
FLOAT SHOE	7.000	N-80	26.00	7,700.7	7,702.0

LINER Report Date: 7/21/2004 00:00

Item	OD (in)	Grade	Wt. (ppf)	TopMD (ft)	BtmMD (ft)
TIE BACK RECEPTACLE	5.750	N-80		7,486.0	7,496.0
LINER HANGER PACKER	5.875	N-80		7,496.0	7,505.5
LINER HANGER	6.000	N-80		7,505.5	7,511.2
CASING JOINT(S)	5.000	N-80	15.00	7,511.2	8,546.1
LANDING COLLAR	5.050	N-80		8,546.1	8,548.6
FLOAT COLLAR	5.000	N-80	15.00	8,548.6	8,551.0
CASING JOINT(S)	5.000	N-80	15.00	8,551.0	8,595.2
FLOAT SHOE	5.000	N-80	15.00	8,595.2	8,598.0

Well: 348XH-35S S/T/R: 35S/30S/24E

CASING CEMENT DETAIL
- - -
Sfc Csg. Cmt Vol: 250 sx
Hole Size: 12.000"
Top Job: No
Rtns to Sfc: Yes
TOC: Surface
- - -

Interm Csg. Cmt Vol: 830 sx
Hole Size: 8.750"
Top Job: No
Rtns to Sfc: No
TTOC: 524'
- - -

Prod. Csg. Cmt Vol.:
Hole Size:
Top Job:
Rtns to Sfc:
TTOC:
- - -

Liner Cmt Vol: 181 sx
Hole Size: 7" casing
Top Job: No
Rtns to Sfc: N/A
TTOC: at linner hanger
- - -
Top of Formation:
UBA: 7317'
BLW: N/A

Volume Behind Pipe:
1.3 Yield Assumed
Theoretical Calculations (TTOC)

OCCIDENTAL OF ELK HILLS INC

351-2G

Event: WELL MAINT - RIG
Event End: 4/13/2009 00:00
Sec. Reason: SPLIT
End Status: FINISHED - SUCCESS
Well Classification: DEVELOPMENT

Ground Level: 820.0ft
Datum: ORIGINAL KB @ 834.00ft (default)
API No.: 0402954057

Wellbore: ORIGINAL HOLE
PBMD: 7,165.0ft
Btm TMD: 8,100.0ft
Spud Date: 10/5/1976 00:00
BH Coord X: 6,153,586.66uss ft
BH Coord Y: 2,286,238.20uss ft

Casing Shoes (ft)

54.0
357.0
3,360.0
7,795.0

Schematic (5/1/2009)

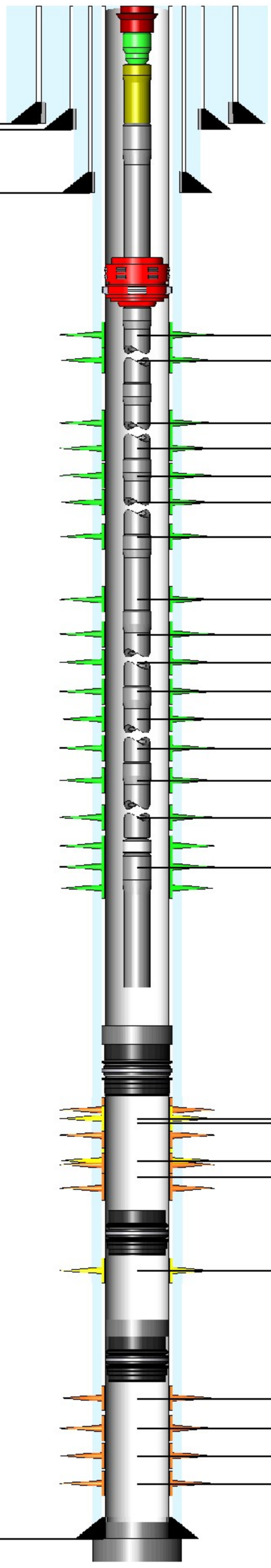

Openings Top/Btm/Type/Status

6,530.0ft, 6,550.0ft, PERFORATED, OPE
6,550.0ft, 6,570.0ft, PERFORATED, OPE
6,648.0ft, 6,651.0ft, PERFORATED, OPE
6,651.0ft, 6,671.0ft, PERFORATED, OPE
6,680.0ft, 6,684.0ft, PERFORATED, OPE
6,690.0ft, 6,696.0ft, PERFORATED, OPE
6,734.0ft, 6,739.0ft, PERFORATED, OPE
6,902.0ft, 6,908.0ft, PERFORATED, OPE
6,947.0ft, 6,952.0ft, PERFORATED, OPE
6,963.0ft, 6,972.0ft, PERFORATED, OPE
6,987.0ft, 6,999.0ft, PERFORATED, OPE
7,007.0ft, 7,012.0ft, PERFORATED, OPE
7,024.0ft, 7,028.0ft, PERFORATED, OPE
7,050.0ft, 7,054.0ft, PERFORATED, OPE
7,088.0ft, 7,096.0ft, PERFORATED, OPE
7,106.0ft, 7,122.0ft, PERFORATED, OPE
7,220.0ft, 7,250.0ft, PERFORATED, ISOL
7,180.0ft, 7,300.0ft, PERFORATED, SQU
7,300.0ft, 7,350.0ft, PERFORATED, ISOL
7,310.0ft, 7,358.0ft, PERFORATED, SQU
7,368.0ft, 7,437.0ft, PERFORATED, ISOL
7,504.0ft, 7,540.0ft, PERFORATED, SQU
7,504.0ft, 7,540.0ft, REPERFORATED, IS
7,568.0ft, 7,600.0ft, PERFORATED, SQU
7,568.0ft, 7,600.0ft, REPERFORATED, IS
7,610.0ft, 7,630.0ft, PERFORATED, SQU
7,640.0ft, 7,685.0ft, PERFORATED, SQU

ROD STRING Report Date: 4/10/2009 00:00

Component	Top MD (ft)	Btm MD (ft)
POLROD	0.0	36.0
PNYROD	36.0	54.0
ROD	54.0	2,064.0
R-4PER	2,064.0	4,464.0
R-4PER	4,464.0	7,074.0
RSTBAR	7,074.0	7,078.0
INSPMP	7,078.0	7,104.0

TUBING STRING Report Date: 4/9/2009 00:00

Component	Top MD (ft)	Btm MD (ft)
TH-DBB	14.0	14.6
FATNIP	14.6	15.4
PUPJNT	15.4	39.4
CAS	39.4	6,451.7
AC	6,451.7	6,454.0
CAS	6,454.0	7,110.7
PMPSH	7,110.7	7,111.4
CAS	7,111.4	7,142.8

PLUG BACK Report Date: 10/18/2004 00:00

Component	Top MD (ft)	Btm MD (ft)
CEMENT	7,165.0	7,170.0
BP-DR	7,170.0	7,172.5

PLUG BACK Report Date: 7/21/1987 00:00

Component	Top MD (ft)	Btm MD (ft)
BP-DR	7,361.0	7,363.0

PLUG BACK Report Date: 7/19/1987 00:00

Component	Top MD (ft)	Btm MD (ft)
CEMENT	7,460.0	7,480.0
BP-DR	7,480.0	7,482.0

PLUG BACK Report Date: 2/16/1977 00:00

Component	Top MD (ft)	Btm MD (ft)
CEMENT	7,745.0	7,795.0

PLUG BACK Report Date: 2/13/1977 00:00

Component	Top MD (ft)	Btm MD (ft)
CEMENT	7,795.0	8,100.0

CONDUCTOR CASING Report Date: 10/5/1976 00:00

Item	OD (in)	Grade	Wt. (ppf)	TopMD (ft)	BtmMD (ft)
CASING JOINT(S)	20.000			14.0	54.0

SURFACE CASING Report Date: 1/11/1977 00:00

Item	OD (in)	Grade	Wt. (ppf)	TopMD (ft)	BtmMD (ft)
CASING JOINT(S)	13.375	H-40	48.00	14.0	357.0

INTERMEDIATE CASING Report Date: 1/16/1977 00:00

Item	OD (in)	Grade	Wt. (ppf)	TopMD (ft)	BtmMD (ft)
CASING JOINT(S)	9.625	K-55	40.00	14.0	3,360.0

PRODUCTION CASING Report Date: 2/13/1977 00:00

Item	OD (in)	Grade	Wt. (ppf)	TopMD (ft)	BtmMD (ft)
CASING JOINT(S)	7.000	K-55	26.00	14.0	76.4
CASING JOINT(S)	7.000	K-55	23.00	76.4	4,849.1
CASING JOINT(S)	7.000	K-55	26.00	4,849.1	6,606.2
FLAG JOINT	7.000	K-55	26.00	6,606.2	6,624.3
CASING JOINT(S)	7.000	K-55	26.00	6,624.3	7,794.0
FLOAT SHOE	7.000	K-55	26.00	7,794.0	7,795.0

Well: 351-2G S/T/R: 2G/31S/24E

CASING CEMENT DETAIL
- - -
Sfc Csg. Cmt Vol.: 331 cf
Hole Size: 17.5"
Top Job: No
Rtns to Sfc: 70 cf
TOC: Sfc
- - -

Interm Csg. Cmt Vol.: 1750 cf
Hole Size: 12.25"
Top Job: No
Rtns to Sfc: 200 cf
TOC: Sfc
- - -

Prod. Csg. Cmt Vol.: 2200 cf
Hole Size: 8.75"
Top Job: No
Rtns to Sfc:
TTOC: Sfc
- - -

Liner Cmt Vol.:
Hole Size:
Top Job:
Rtns to Sfc:
TTOC:
- - -
Top of Formation:
UBA: 7200'
BLW: 7825'

Volume Behind Pipe:
1.3 Yield Assumed
Theoretical Calculations (TTOC)

OCCIDENTAL OF ELK HILLS INC

352-2G

Event: WELL MAINT - RIGLESS
Event End: 1/26/2008 00:00
Sec. Reason:
End Status: FINISHED - SUCCESS
Well Classification: INJECTION

Ground Level: 845.0ft
Datum: ORIGINAL KB @ 862.00ft (default)
API No.: 0402968290

Wellbore: ORIGINAL HOLE
PBMD: 7,997.0ft
Btm TMD: 8,015.0ft
Spud Date: 1/1/1983 00:00
BH Coord X: 6,153,573.29uss ft
BH Coord Y: 2,285,687.35uss ft

Casing Shoes (ft) | Schematic (2/1/2008) | Openings Top/Btm/Type/Status

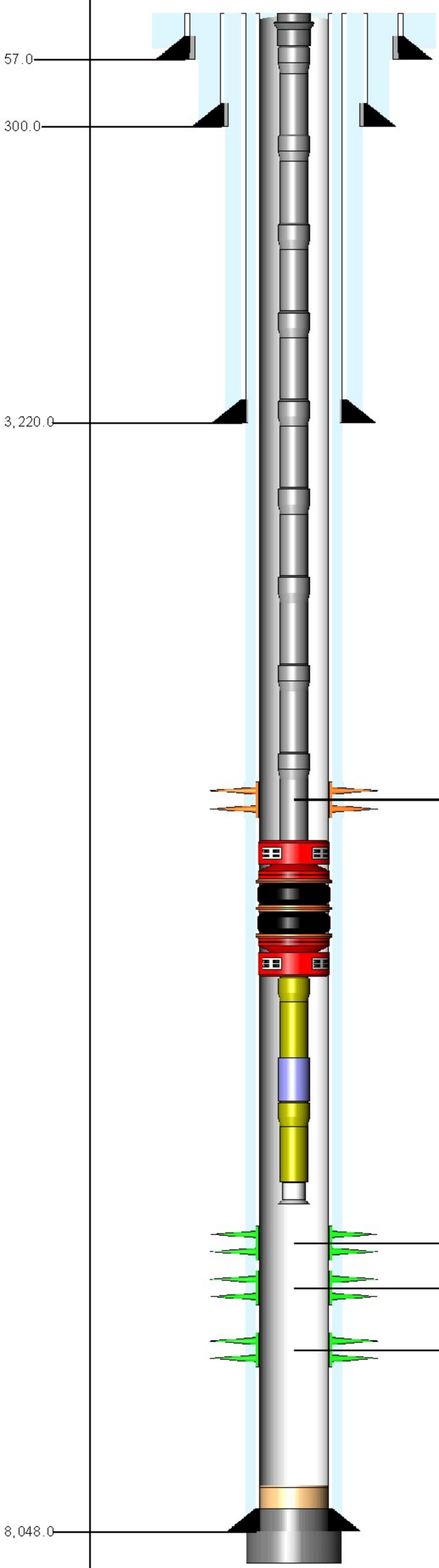

7,340.0ft, 7,370.0ft, PERFORATED, SQU
7,340.0ft, 7,390.0ft, PERFORATED, SQU
7,693.0ft, 7,738.0ft, PERFORATED, OPE
7,753.0ft, 7,830.0ft, PERFORATED, OPE
7,855.0ft, 7,913.0ft, PERFORATED, OPE

TUBING STRING Report Date: 7/24/1984 00:00

Component	Top MD (ft)	Btm MD (ft)
TH-SGL	17.0	17.6
TBGJNT	17.6	7,630.7
PKR-S	7,630.7	7,637.5
PUPJNT	7,637.5	7,647.6
NOGO-O	7,647.6	7,648.9
PUPJNT	7,648.9	7,655.0
BELCOL	7,655.0	7,655.4

PLUG BACK Report Date: 2/18/2004 00:00

Component	Top MD (ft)	Btm MD (ft)
FILL	7,964.0	7,997.0

PLUG BACK Report Date: 4/29/2005 00:00

Component	Top MD (ft)	Btm MD (ft)
FILL	7,966.0	7,997.0

PLUG BACK Report Date: 8/22/1983 00:00

Component	Top MD (ft)	Btm MD (ft)
CEMENT	7,997.0	8,048.0

PLUG BACK Report Date: 2/15/1983 00:00

Component	Top MD (ft)	Btm MD (ft)
CEMENT	8,048.0	8,050.0

CONDUCTOR CASING Report Date: 1/21/1983 00:00

Item	OD (in)	Grade	Wt. (ppf)	TopMD (ft)	BtmMD (ft)
CASING JOINT(S)	20.000			17.0	57.0

SURFACE CASING Report Date: 1/27/1983 00:00

Item	OD (in)	Grade	Wt. (ppf)	TopMD (ft)	BtmMD (ft)
CASING JOINT(S)	13.375	H-40	48.00	17.0	298.7
GUIDE SHOE	13.375			298.7	300.0

INTERMEDIATE CASING Report Date: 1/31/1983 00:00

Item	OD (in)	Grade	Wt. (ppf)	TopMD (ft)	BtmMD (ft)
CASING JOINT(S)	9.625	K-55	40.00	17.0	3,218.7
GUIDE SHOE	9.625			3,218.7	3,220.0

PRODUCTION CASING Report Date: 2/15/1983 00:00

Item	OD (in)	Grade	Wt. (ppf)	TopMD (ft)	BtmMD (ft)
CASING JOINT(S)	7.000	N-80	26.00	17.0	86.6
CASING JOINT(S)	7.000	K-55	23.00	86.6	5,022.8
CASING JOINT(S)	7.000	K-55	26.00	5,022.8	6,629.1
FLAG JOINT	7.000	K-55	23.00	6,629.1	6,649.9
CASING JOINT(S)	7.000	N-80	26.00	6,649.9	7,996.8
FLOAT COLLAR	7.000	N-80		7,996.8	7,998.6
CASING JOINT(S)	7.000	N-80	26.00	7,998.6	8,045.7
FLOAT SHOE	7.000			8,045.7	8,048.0

Well: 352-2G S/T/R: 2G/31S/24E

CASING CEMENT DETAIL
- - -
Sfc Csg. Cmt Vol.: 415 cf
Hole Size: 17.5"
Top Job: No
Rtns to Sfc: 45 cf
TOC: Sfc
- - -

Interm Csg. Cmt Vol.: 1530 cf
Hole Size: 12.25"
Top Job: No
Rtns to Sfc: 40 cf
TOC: Sfc
- - -

Prod. Csg. Cmt Vol.: 2125 cf
Hole Size: 8.75"
Top Job: No
Rtns to Sfc: 10 cf
TOC: Sfc
- - -

Liner Cmt Vol.:
Hole Size:
Top Job:
Rtns to Sfc:
TTOC:
- - -
Top of Formation:
UBA: 7339'
BLW: 7960'

Volume Behind Pipe:
1.3 Yield Assumed
Theoretical Calculations (TTOC)

OCCIDENTAL OF ELK HILLS INC

352H-3G

Event: WELL MAINT - RIG
Event End: 8/24/2007 00:00
Sec. Reason: SPLIT

Ground Level: 921.4ft
KB to Ground: 21.0ft
Datum: ORIGINAL KB @ 942.40ft (default)
API No.: 0403020804

Wellbore: ORIGINAL HOLE
Top TMD: 21.0ft
PBMD: 9,000.0ft
Btm TMD: 9,000.0ft
Spud Date: 7/18/2002 00:00
BH Coord X: 6,150,946.00uss ft
BH Coord Y: 2,286,238.12uss ft

Casing Shoes (ft)	Schematic (9/1/2007)	Openings Top/Btm/Type/Status

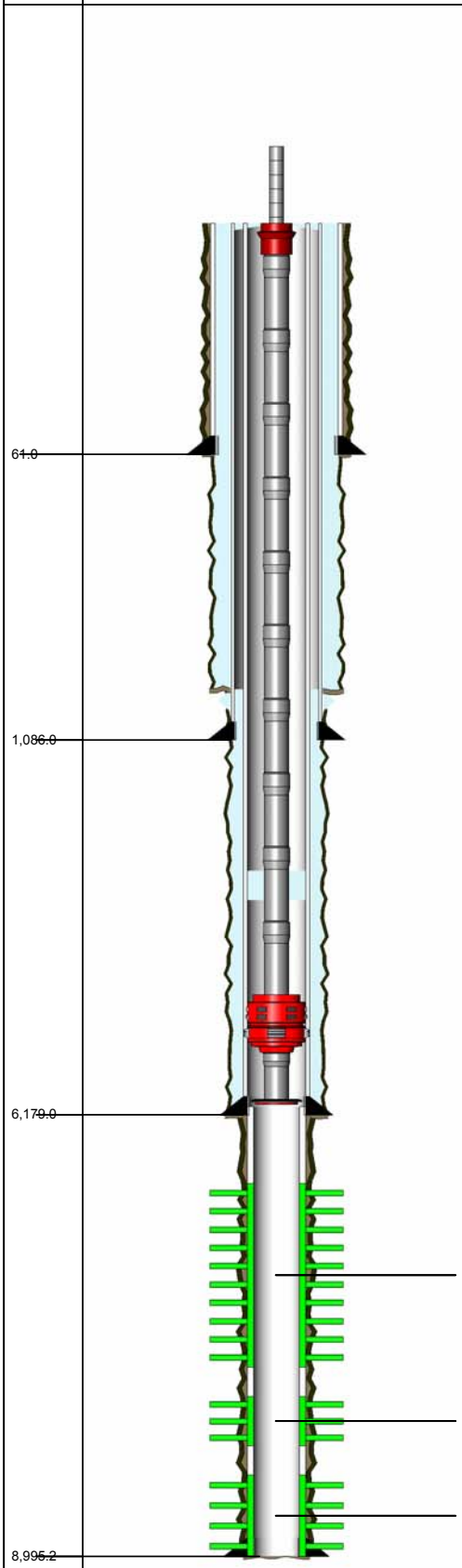

6,617.0ft, 7,786.0ft, SLOTTED, OPEN

7,974.0ft, 8,290.0ft, SLOTTED, OPEN

8,477.0ft, 8,995.0ft, SLOTTED, OPEN

ROD STRING — Report Date: 8/24/2007 00:00

Component	Top MD (ft)	Btm MD (ft)
POLROD	0.0	30.0
PNYROD	30.0	48.0
R-4PER	48.0	798.0
ROD	798.0	2,178.0
ROD	2,178.0	6,048.0
RSTBAR	6,048.0	6,052.0
INSPMP	6,052.0	6,076.0

TUBING STRING — Report Date: 8/17/2007 00:00

Component	Top MD (ft)	Btm MD (ft)
TH-DBB	21.0	21.0
TBGJNT	21.0	5,854.1
AC	5,854.1	5,856.5
TBGJNT	5,856.5	6,076.7
STNIP	6,076.7	6,077.8
GASANC	6,077.8	6,110.3

CONDUCTOR CASING — Report Date: 7/16/2002 00:00

Item Description	Btm MD(ft)
CASING JOINT(S) 14 in,	61.0

SURFACE CASING — Report Date: 7/19/2002 00:00

Item Description	Btm MD (ft)
CASING JOINT(S) 9.625 in, , K-55, 36	1,040.7
INSERT FLOAT 9.625 in, , 36	1,040.7
CASING JOINT(S) 9.625 in, , K-55, 36	1,084.8
GUIDE SHOE 9.625 in, , 36	1,086.0

PRODUCTION CASING — Report Date: 8/1/2002 00:00

Item Description	Btm MD (ft)
CASING JOINT(S) 7 in, , N-80, 29	6,085.1
FLOAT COLLAR 7 in, , N-80, 29	6,086.5
CASING JOINT(S) 7 in, , N-80, 29	6,177.5
FLOAT SHOE 7 in, , N-80, 29	6,179.0

LINER — Report Date: 8/16/2002 00:00

Item Description	Btm MD (ft)
LINER HANGER 6.184 in,	6,132.3
CROSSOVER 6.184 in, , N-80, 15	6,132.9
CASING JOINT(S) 5 in, , N-80, 15	6,178.0
CROSSOVER 5 in, , N-80, 15	6,179.2
CASING JOINT(S) 3.5 in, , N-80, 9.3	6,617.6
SLOTTED LINER 3.5 in, , N-80, 9.3	7,785.7
CASING JOINT(S) 3.5 in, , N-80, 9.3	7,973.8
SLOTTED LINER 3.5 in, , N-80, 9.3	8,289.8
CASING JOINT(S) 3.5 in, , N-80, 9.3	8,477.6
SLOTTED LINER 3.5 in, , N-80, 9.3	8,984.6
MULE SHOE 3.5 in, , N-80, 9.3	8,995.2

Well: 352H-3G S/T/R: 3G/31S/24E

CASING CEMENT DETAIL
- - -
Sfc Csg. Cmt Vol.: 805cf
Hole Size: 9-5/8"
Top Job:
Rtns to Sfc: Yes - 28 bbls
TOC: Sfc
- - -

Interm Csg. Cmt Vol.:
Hole Size:
Top Job:
Rtns to Sfc:
TOC:
- - -

Prod. Csg. Cmt Vol.: 1020cf
Hole Size: 8.75"
Top Job:
Rtns to Sfc: no
TTOC: 2928'
- - -

Liner Cmt Vol.: none - slotted
Hole Size: 6"
Top Job:
Rtns to Sfc:
TOC:
- - -
Top of Formation:
UBA: N/A
BLW: N/A

Volume Behind Pipe:
1.3 Yield Assumed
Theoretical Calculations (TTOC)

OCCIDENTAL OF ELK HILLS INC

352X-3G

Event: WELL MAINT - RIGLESS
Event End: 12/13/2006 00:00
Sec. Reason:

Ground Elev: 921.0ft
KB to Ground: 941.0ft
Datum: ORIGINAL KB @ 941.00ft (default)
API No.: 0402984529

Wellbore: ORIGINAL HOLE
Top TMD: 941.0ft
PBMD: 7,609.0ft
Btm TMD: 7,697.0ft
Spud Date: 6/27/1989 00:00
BH Coord X: 6,148,371.92uss ft BH Coord Y: 2,285,812.60uss

Casing Shoes (ft)

Schematic (1/1/2007)

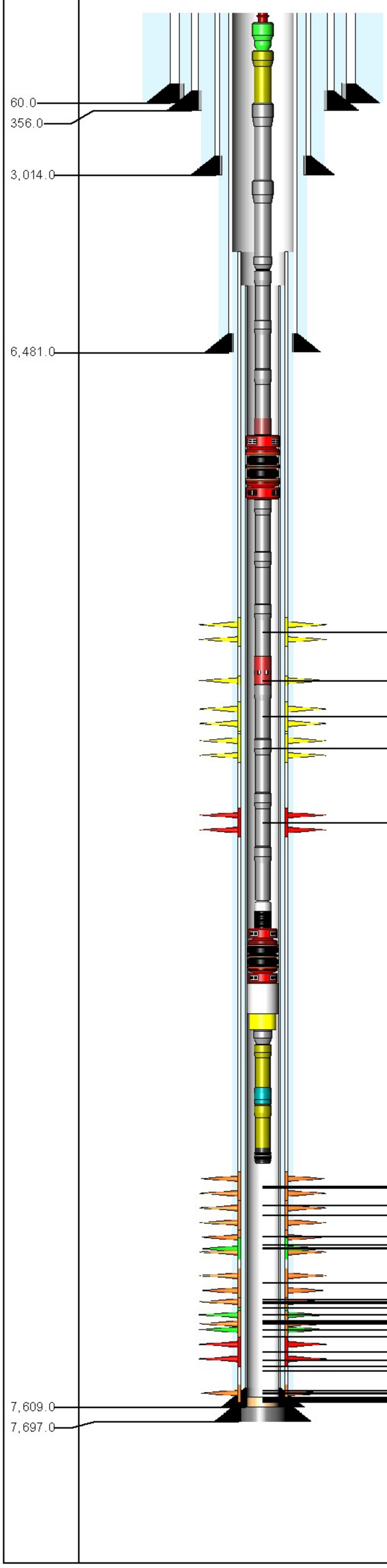

Openings Top/Btm/Type/Status

PACKER

6,904.0ft, 6,910.0ft, PERFORATED, ISOLAT
6,930.0ft, 6,934.0ft, PERFORATED, ISOLAT
6,970.0ft, 6,982.0ft, PERFORATED, ISOLAT
6,987.0ft, 7,000.0ft, PERFORATED, ISOLAT
7,090.0ft, 7,125.0ft, PERFORATED, ABAND
7,090.0ft, 7,125.0ft, SQZ PERFS, SQUEEZE
7,285.0ft, 7,305.0ft, PERFORATED, SQUEE
7,285.0ft, 7,305.0ft, SQZ PERFS, OPEN
7,290.0ft, 7,303.0ft, REPERFORATED, OPE
7,303.0ft, 7,313.0ft, REPERFORATED, OPE
7,305.0ft, 7,325.0ft, PERFORATED, SQUEE
7,305.0ft, 7,325.0ft, SQZ PERFS, SQUEEZE
7,328.0ft, 7,339.0ft, REPERFORATED, OPE
7,325.0ft, 7,365.0ft, SQZ PERFS, SQUEEZE
7,325.0ft, 7,365.0ft, PERFORATED, SQUEE
7,339.0ft, 7,360.0ft, REPERFORATED, OPE
7,336.0ft, 7,365.0ft, PERFORATED, OPEN
7,390.0ft, 7,410.0ft, REPERFORATED, OPE
7,390.0ft, 7,411.0ft, PERFORATED, SQUEE
7,415.0ft, 7,415.1ft, REPERFORATED, OPE
7,410.0ft, 7,431.0ft, REPERFORATED, OPE
7,410.0ft, 7,432.0ft, PERFORATED, SQUEE
7,410.0ft, 7,432.0ft, PERFORATED, SQUEE
7,410.0ft, 7,432.0ft, SQZ PERFS, SQUEEZE
7,411.0ft, 7,432.0ft, REPERFORATED, OPE
7,423.0ft, 7,423.1ft, REPERFORATED, OPE
7,433.0ft, 7,433.1ft, REPERFORATED, OPE
7,438.0ft, 7,438.1ft, REPERFORATED, OPE
7,431.0ft, 7,452.0ft, REPERFORATED, OPE
7,433.0ft, 7,453.0ft, REPERFORATED, OPE
7,433.0ft, 7,453.0ft, PERFORATED, OPEN
7,433.0ft, 7,453.0ft, SQZ PERFS, OPEN
7,443.0ft, 7,443.1ft, REPERFORATED, OPE
7,435.0ft, 7,453.0ft, PERFORATED, SQUEE
7,448.0ft, 7,448.1ft, REPERFORATED, OPE
7,453.0ft, 7,453.1ft, REPERFORATED, OPE
7,453.0ft, 7,468.0ft, PERFORATED, ABAND
7,453.0ft, 7,468.0ft, SQZ PERFS, OPEN
7,465.0ft, 7,465.1ft, REPERFORATED, OPE
7,468.0ft, 7,468.1ft, REPERFORATED, OPE
7,469.0ft, 7,478.0ft, SQZ PERFS, OPEN
7,495.0ft, 7,495.1ft, REPERFORATED, OPE
7,488.0ft, 7,552.0ft, PERFORATED, ABAND
7,488.0ft, 7,552.0ft, SQZ PERFS, SQUEEZE
7,488.0ft, 7,552.0ft, PERFORATED, SQUEE
7,498.0ft, 7,498.1ft, REPERFORATED, OPE
7,508.0ft, 7,508.1ft, REPERFORATED, OPE
7,513.0ft, 7,513.1ft, REPERFORATED, OPE
7,523.0ft, 7,523.1ft, REPERFORATED, OPE
7,528.0ft, 7,528.1ft, REPERFORATED, OPE
7,533.0ft, 7,533.1ft, REPERFORATED, OPE
7,538.0ft, 7,538.1ft, REPERFORATED, OPE
7,545.0ft, 7,545.1ft, REPERFORATED, OPE
7,550.0ft, 7,550.1ft, REPERFORATED, OPE

TUBING STRING Report Date: 4/18/2005 00:00

Component	Top MD (ft)	Btm MD (ft)
TH-DBB	20.0	20.7
FATNIP	20.7	21.3
PUPJNT	21.3	31.6
TBGJNT	31.6	6,352.0
XO	6,352.0	6,353.2
TBGJNT	6,353.2	6,606.8
ON-OFF	6,606.8	6,608.2
PKR-S	6,608.2	6,612.2
TBGJNT	6,612.2	6,927.2
SS-C	6,927.2	6,931.2
TBGJNT	6,931.2	7,216.0
LOCSUB	7,216.0	7,217.2
SA	7,217.2	7,220.0

PACKER ASSEMBLY (RETRIEVABLE) Report Date: 3/27/2002 00:00

Component	Top MD (ft)	Btm MD (ft)
PKR-S	7,220.0	7,222.4
SBEXT	7,222.4	7,226.0
MOEXT	7,226.0	7,229.9
XO	7,229.9	7,230.6
PUPJNT	7,230.6	7,240.6
PNIP-O	7,240.6	7,241.8
PUPJNT	7,241.8	7,249.9
POPLUG	7,249.9	7,250.4

PLUG BACK Report Date: 8/29/2003 00:00

Component	Top MD (ft)	Btm MD (ft)
FILL	7,502.0	7,609.0

PLUG BACK Report Date: 8/25/1995 00:00

Component	Top MD (ft)	Btm MD (ft)
CEMENT	7,609.0	7,697.0

CONDUCTOR CASING Report Date: 6/27/1989 00:00

Item Description	Btm MD(ft)
CASING JOINT(S) 26 in, , K-55	60.0

SURFACE CASING Report Date: 9/10/1989 00:00

Item Description	Btm MD (ft)
CASING JOINT(S) 20 in, , K-55, 94	356.0

INTERMEDIATE CASING Report Date: 9/16/1989 00:00

Item Description	Btm MD (ft)
CASING JOINT(S) 13.375 in, , K-55, 68	3,014.0

PRODUCTION CASING Report Date: 9/30/1989 00:00

Item Description	Btm MD (ft)
CASING JOINT(S) 9.625 in, , N-80, 43.5	2,344.0
CASING JOINT(S) 9.625 in, , C-95, 47	3,494.0
CASING JOINT(S) 9.625 in, , N-80, 53.5	5,976.0
CASING JOINT(S) 9.625 in, , 53.5	6,481.0

LINER Report Date: 10/23/1989 00:00

Item Description	Btm MD (ft)
CASING JOINT(S) 7 in, , N-80, 29	7,697.0

INNER LINER Report Date: 8/25/1995 00:00

Item Description	Btm MD (ft)
CASING JOINT(S) 5 in, , N-80, 18	6,390.0
CASING JOINT(S) 5 in, , N-80, 18	7,609.0

Well: 352X-3G S/T/R: 3G/31S/24E

CASING CEMENT DETAIL
- - -
Sfc Csg. Cmt Vol.: 690cf
Hole Size: 17.5"
Top Job:
Rtns to Sfc: Yes
TOC: Sfc
- - -

Interm Csg. Cmt Vol.: 3500cf
Hole Size: 12.5"
Top Job:
Rtns to Sfc: Yes
TOC: Sfc
- - -

Prod. Csg. Cmt Vol.: 3100cf
Hole Size: 8.5"
Top Job:
Rtns to Sfc: No
TTOC: Sfc
- - -

Liner Cmt Vol.: 350cf
Hole Size: 8.5"
Top Job:
Rtns to SFC:
TOC: TOL
- - -

Top of Formation:
UBA: 7037'
BLW: 7602'

Volume Behind Pipe
1.15 Yield Assumed on
Theoretical Calculations (T)

OCCIDENTAL OF ELK HILLS INC

353-2G

Event: WELL MAINT - RIGLESS
Event End: 12/24/2003 00:00
Sec. Reason: INJECTION PROFILE SURVEY

Ground Level: 806.9ft
Datum: ORIGINAL KB @ 820.92ft (default)
API No.: 0402958197

Wellbore: ORIGINAL HOLE
PBMD: 8,153.0ft
Btm TMD: 8,250.0ft
Spud Date: 6/14/1978 00:00
BH Coord X: 6,153,567.50uss ft
BH Coord Y: 2,284,937.20uss ft

Casing Shoes (ft) | Schematic (1/1/2004) | Openings Top/Btm/Type/Status

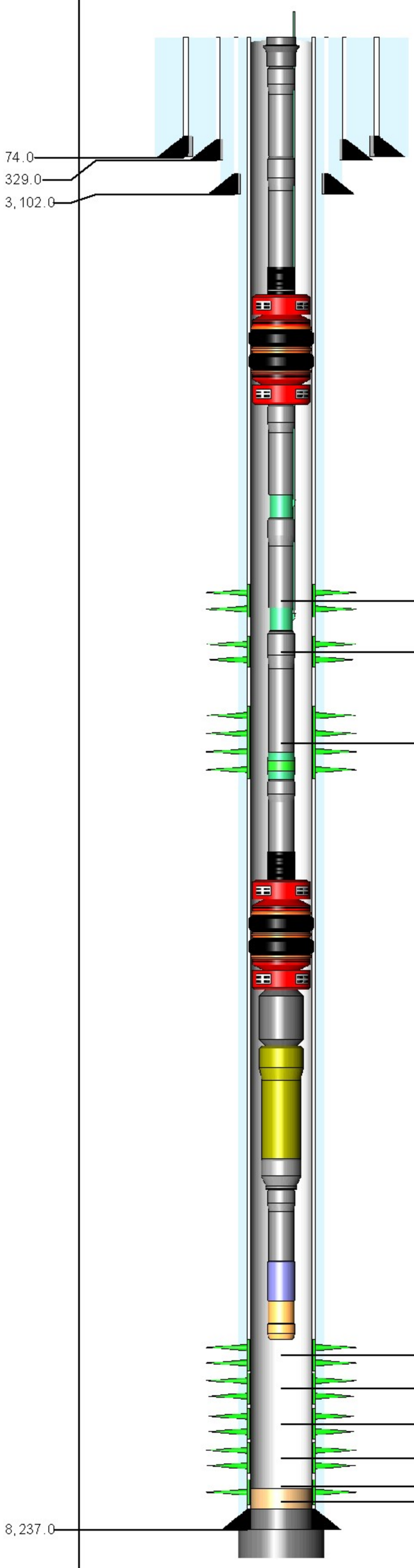

7,480.0ft, 7,500.0ft, PERFORATED, OPEN
7,511.0ft, 7,534.0ft, PERFORATED, OPEN
7,564.0ft, 7,600.0ft, PERFORATED, OPEN
7,630.0ft, 7,700.0ft, PERFORATED, OPEN
7,730.0ft, 7,786.0ft, PERFORATED, OPEN
7,837.0ft, 7,875.0ft, PERFORATED, OPEN
7,902.0ft, 7,965.0ft, PERFORATED, OPEN
7,995.0ft, 8,065.0ft, PERFORATED, OPEN
8,095.0ft, 8,127.0ft, PERFORATED, OPEN

TUBING STRING Report Date: 5/23/1991 00:00

Component	Top MD (ft)	Btm MD (ft)
TH-SGL	14.0	14.6
TBGJNT	14.6	38.5
TBGJNT	38.5	7,385.8
SA	7,385.8	7,386.3
PKR-S	7,386.3	7,392.4
TBGJNT	7,392.4	7,424.0
INJM-V	7,424.0	7,433.1
TBGJNT	7,433.1	7,496.2
INJM-V	7,496.2	7,505.3
TBGJNT	7,505.3	7,598.9
LNDNIP	7,598.9	7,600.1
TBGJNT	7,600.1	7,608.3
SA	7,608.3	7,608.8
PKR-S	7,608.8	7,611.5
TBGCPL	7,611.5	7,611.7
PUPJNT	7,611.7	7,615.9
XO	7,615.9	7,616.6
TBGJNT	7,616.6	7,622.8
NOGO-O	7,622.8	7,623.9
WLREG	7,623.9	7,624.3

PLUG BACK Report Date: 12/24/2003 00:00

Component	Top MD (ft)	Btm MD (ft)
FILL	8,039.0	8,153.0

PLUG BACK Report Date: 11/25/1978 00:00

Component	Top MD (ft)	Btm MD (ft)
CEMENT	8,153.0	8,237.0

PLUG BACK Report Date: 11/23/1978 00:00

Component	Top MD (ft)	Btm MD (ft)
CEMENT	8,237.0	8,250.0

CONDUCTOR CASING Report Date: 6/14/1978 00:00

Item	OD (in)	Grade	Wt. (ppf)	TopMD (ft)	BtmMD (ft)
CASING JOINT(S)	20.000			14.0	74.0

SURFACE CASING Report Date: 10/20/1978 00:00

Item	OD (in)	Grade	Wt. (ppf)	TopMD (ft)	BtmMD (ft)
CASING JOINT(S)	13.375	K-55	54.50	14.0	329.0

INTERMEDIATE CASING Report Date: 10/25/1978 00:00

Item	OD (in)	Grade	Wt. (ppf)	TopMD (ft)	BtmMD (ft)
CASING JOINT(S)	9.625	N-80	40.00	14.0	3,102.0

PRODUCTION CASING Report Date: 11/23/1978 00:00

Item	OD (in)	Grade	Wt. (ppf)	TopMD (ft)	BtmMD (ft)
CASING JOINT(S)	7.000	K-55	26.00	14.0	81.7
CASING JOINT(S)	7.000	K-55	23.00	81.7	5,300.6
CASING JOINT(S)	7.000	K-55	26.00	5,300.6	6,779.9
FLAG JOINT	7.000	K-55	26.00	6,779.9	6,796.7
CASING JOINT(S)	7.000	K-55	26.00	6,796.7	8,191.7
FLOAT COLLAR	7.000		26.00	8,191.7	8,193.1
CASING JOINT(S)	7.000	K-55	26.00	8,193.1	8,234.8
FLOAT SHOE	7.000		26.00	8,234.8	8,237.0

Well: 353-2G S/T/R: 2G/31S/24E

CASING CEMENT DETAIL
- - -
Sfc Csg. Cmt Vol.: 360 cf
Hole Size: 17.5"
Top Job: No
Rtns to Sfc: 30 cf
TOC: Sfc
- - -

Interm Csg. Cmt Vol.: 1565 cf
Hole Size: 12.25"
Top Job: No
Rtns to Sfc: 180 cf
TOC: Sfc
- - -

Prod. Csg. Cmt Vol.: 2100 cf
Hole Size: 8.75"
Top Job: No
Rtns to Sfc:
TTOC: Sfc

Liner Cmt Vol.:
Hole Size:
Top Job:
Rtns to Sfc:
TTOC:
- - -
Top of Formation:
UBA: 7506'
BLW: 8135"

Volume Behind Pipe:
1.3 Yield Assumed
Theoretical Calculations (TTOC)

OCCIDENTAL OF ELK HILLS INC

353-34S

Event: WELL MAINT - RIG
Event End: 9/27/2008 00:00
Sec. Reason: LOW PRODUCTION
End Status: FINISHED - SUCCESS
Well Classification: DEVELOPMENT

Ground Level: 864.0ft
Datum: ORIGINAL KB @ 877.00ft (default)
API No.: 0402960225

Wellbore: ST1
PBMD: 7,601.0ft
Btm TMD: 7,900.0ft
Spud Date: 3/2/1979 00:00
BH Coord X: 6,148,330.45uss ft
BH Coord Y: 2,290,219.45uss ft

Casing Shoes (ft)	Schematic (10/1/2008)	Openings Top/Btm/Type/Status

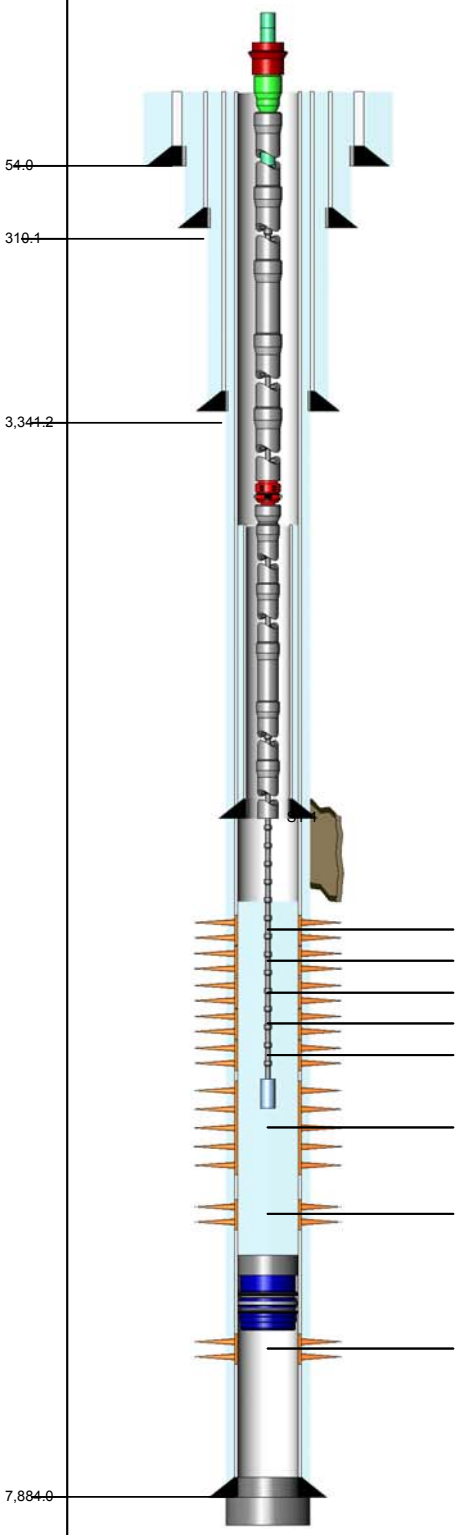

7,190.0ft, 7,226.0ft, PERFORATED, SQUEEZED
7,240.0ft, 7,250.0ft, PERFORATED, SQUEEZED
7,282.0ft, 7,292.0ft, PERFORATED, SQUEEZED
7,302.0ft, 7,345.0ft, PERFORATED, SQUEEZED
7,365.0ft, 7,455.0ft, PERFORATED, SQUEEZED
7,478.0ft, 7,560.0ft, PERFORATED, SQUEEZED
7,580.0ft, 7,595.0ft, PERFORATED, SQUEEZED
7,615.0ft, 7,698.0ft, PERFORATED, SQUEEZED

ROD STRING — Report Date: 9/27/2008 00:00

Component	Top MD (ft)	Btm MD (ft)
POLRDL	0.0	36.0
ROD	36.0	2,736.0
ROD	2,736.0	5,226.0
R-6PER	5,226.0	7,476.0
INSPMP	7,476.0	7,506.0

TUBING STRING — Report Date: 9/26/2008 00:00

Component	Top MD (ft)	Btm MD (ft)
TH-DBB	13.0	13.7
FATNIP	13.7	14.4
CAS	14.4	5,026.0
AC	5,026.0	5,028.4
XO	5,028.4	5,029.5
CAS	5,029.5	7,505.6
STNIP	7,505.6	7,506.8
CAS	7,506.8	7,538.0
STCOLL	7,538.0	7,538.5

PLUG BACK — Report Date: 2/16/1980 00:00

Component	Top MD (ft)	Btm MD (ft)
CEMENT	7,601.0	7,605.0

PLUG BACK — Report Date: 2/16/1980 00:00

Component	Top MD (ft)	Btm MD (ft)
CR-RET	7,605.0	7,607.0

PLUG BACK — Report Date: 12/9/1979 00:00

Component	Top MD (ft)	Btm MD (ft)
CEMENT	7,840.4	7,884.0

PLUG BACK — Report Date: 12/8/1979 00:00

Component	Top MD (ft)	Btm MD (ft)
CEMENT	7,884.0	7,900.0

CONDUCTOR CASING — Report Date: 3/2/1979 00:00

Item	OD (in)	Grade	Wt. (ppf)	TopMD (ft)	BtmMD (ft)
CASING JOINT(S)	20.000			14.0	54.0

SURFACE CASING — Report Date: 11/4/1979 00:00

Item	OD (in)	Grade	Wt. (ppf)	TopMD (ft)	BtmMD (ft)
CASING JOINT(S)	13.375	K-55	54.50	14.0	307.9
GUIDE SHOE	13.375	K-55	54.50	307.9	309.0

INTERMEDIATE CASING — Report Date: 11/8/1979 00:00

Item	OD (in)	Grade	Wt. (ppf)	TopMD (ft)	BtmMD (ft)
CASING JOINT(S)	9.625	K-55	40.00	14.0	3,338.8
GUIDE SHOE	9.625	K-55	40.00	3,338.8	3,340.0

PRODUCTION CASING — Report Date: 12/8/1979 00:00

Item	OD (in)	Grade	Wt. (ppf)	TopMD (ft)	BtmMD (ft)
CASING JOINT(S)	7.000	K-55	26.00	14.0	76.0
CASING JOINT(S)	7.000	K-55	23.00	76.0	5,264.0
CASING JOINT(S)	7.000	K-55	26.00	5,264.0	7,840.4
FLOAT COLLAR	7.000	K-55	26.00	7,840.4	7,841.8
CASING JOINT(S)	7.000	K-55	26.00	7,841.8	7,881.8
GUIDE SHOE	7.000	K-55	26.00	7,881.8	7,884.0

LINER — Report Date: 5/28/2003 00:00

Item	OD (in)	Grade	Wt. (ppf)	TopMD (ft)	BtmMD (ft)
TIE BACK RECEPTACLE	5.000			5,058.1	5,068.6
LINER HANGER PACKER	5.000			5,068.6	5,071.1
PBR	5.000			5,071.1	5,081.0
LINER HANGER	5.000			5,081.0	5,088.2
CROSSOVER	5.000	P-110	18.00	5,088.2	5,093.1
CASING JOINT(S)	5.000	P-110	18.00	5,093.1	7,608.3
LANDING COLLAR	5.000			7,608.3	7,608.3
CASING JOINT(S)	5.000	P-110	18.00	7,608.3	7,649.1
FLOAT COLLAR	5.000			7,649.1	7,649.1
CASING JOINT(S)	5.000	P-110	18.00	7,649.1	7,689.4
FLOAT SHOE	5.000			7,689.4	7,690.0

Well: 353-34S S/T/R: 34S/30S/24E

CASING CEMENT DETAIL
- - -
Sfc Csg. Cmt Vol.: 500 cf
Hole Size: 17-1/2" (13-3/8" Casing)
Top Job: NO
Rtns to Sfc: Yes
TTOC: NA
- - -

Interm Csg. Cmt Vol.: 1655 cf
Hole Size: 12-1/4" (9-5/8" Casing)
Top Job: NO
Rtns to Sfc: YES
TTOC: NA
- - -

Prod. Csg. Cmt Vol.: 1750
Hole Size: 8-3/4" (7" Casing)
Top Job: NO
Rtns to Sfc: NO
TTOC: Surface
- - -

Liner Cmt Vol.: None
Hole Size:
Top Job:
Rtns to Sfc :
TTOC:
- - -
Top of Formation:
UBA: 7363'
BLW: 7734'

Volume Behind Pipe:
1.3 Yield Assumed
Theoretical Calculations (TTOC)

OCCIDENTAL OF ELK HILLS INC

353-34S

Event: WELL MAINT - RIG
Event End: 9/27/2008 00:00
Sec. Reason: LOW PRODUCTION
End Status: FINISHED - SUCCESS
Well Classification: DEVELOPMENT

Ground Level: 864.0ft
Datum: ORIGINAL KB @ 877.00ft (default)
API No.: 0402960225

Wellbore: ST 1
PBMD: 7,608.0ft
Btm TMD: 7,655.0ft
Spud Date: 3/2/1979 00:00
BH Coord X: 6,148,435.32uss ft
BH Coord Y: 2,289,911.82uss ft

Casing Shoes (ft) | Schematic (10/1/2008) | Openings Top/Btm/Type/Status

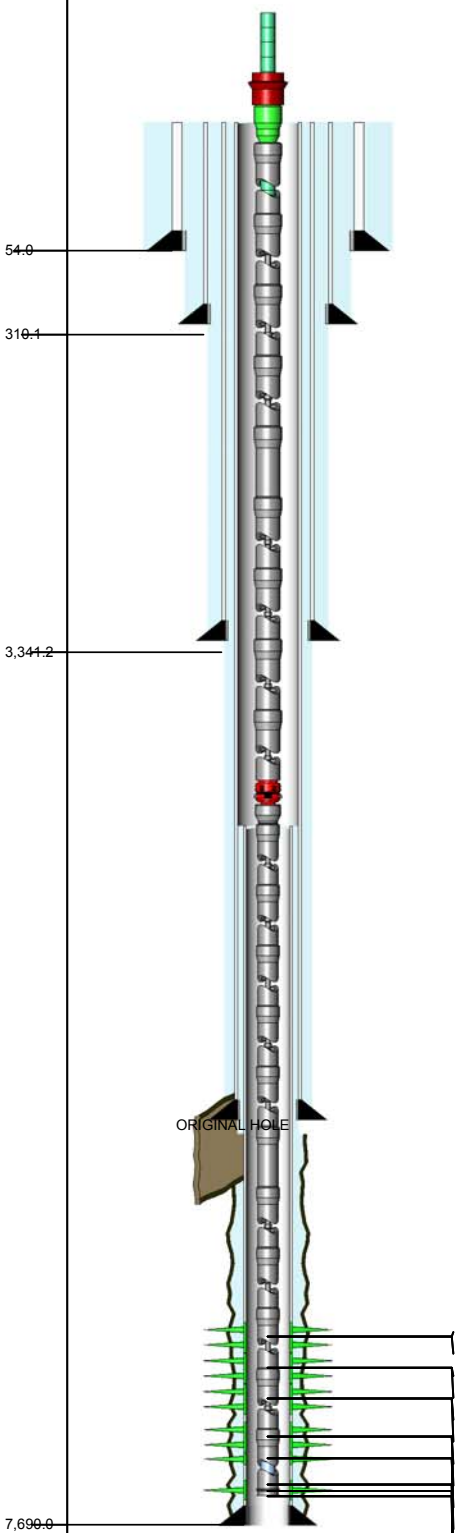

7,287.0ft, 7,312.0ft, PERFORATED, OPEN
7,287.0ft, 7,312.0ft, PERFORATED, OPEN
7,320.0ft, 7,354.0ft, PERFORATED, OPEN
7,320.0ft, 7,354.0ft, PERFORATED, OPEN
7,358.0ft, 7,374.0ft, PERFORATED, OPEN
7,358.0ft, 7,374.0ft, PERFORATED, OPEN
7,424.0ft, 7,444.0ft, PERFORATED, OPEN
7,424.0ft, 7,444.0ft, PERFORATED, OPEN
7,450.0ft, 7,480.0ft, PERFORATED, OPEN
7,450.0ft, 7,480.0ft, PERFORATED, OPEN
7,497.0ft, 7,508.0ft, PERFORATED, OPEN
7,497.0ft, 7,508.0ft, PERFORATED, OPEN
7,512.0ft, 7,526.0ft, PERFORATED, OPEN
7,512.0ft, 7,526.0ft, PERFORATED, OPEN
7,530.0ft, 7,560.0ft, PERFORATED, OPEN
7,530.0ft, 7,560.0ft, PERFORATED, OPEN

ROD STRING — Report Date: 9/27/2008 00:00

Component	Top MD (ft)	Btm MD (ft)
POLRDL	0.0	36.0
ROD	36.0	2,736.0
ROD	2,736.0	5,226.0
R-6PER	5,226.0	7,476.0
INSPMP	7,476.0	7,506.0

TUBING STRING — Report Date: 9/26/2008 00:00

Component	Top MD (ft)	Btm MD (ft)
TH-DBB	13.0	13.7
FATNIP	13.7	14.4
CAS	14.4	5,026.0
AC	5,026.0	5,028.4
XO	5,028.4	5,029.5
CAS	5,029.5	7,505.6
STNIP	7,505.6	7,506.8
CAS	7,506.8	7,538.0
STCOLL	7,538.0	7,538.5

CONDUCTOR CASING — Report Date: 3/2/1979 00:00

Item	OD (in)	Grade	Wt. (ppf)	TopMD (ft)	BtmMD (ft)
CASING JOINT(S)	20.000			14.0	54.0

SURFACE CASING — Report Date: 11/4/1979 00:00

Item	OD (in)	Grade	Wt. (ppf)	TopMD (ft)	BtmMD (ft)
CASING JOINT(S)	13.375	K-55	54.50	14.0	307.9
GUIDE SHOE	13.375	K-55	54.50	307.9	309.0

INTERMEDIATE CASING — Report Date: 11/8/1979 00:00

Item	OD (in)	Grade	Wt. (ppf)	TopMD (ft)	BtmMD (ft)
CASING JOINT(S)	9.625	K-55	40.00	14.0	3,338.8
GUIDE SHOE	9.625	K-55	40.00	3,338.8	3,340.0

PRODUCTION CASING — Report Date: 12/8/1979 00:00

Item	OD (in)	Grade	Wt. (ppf)	TopMD (ft)	BtmMD (ft)
CASING JOINT(S)	7.000	K-55	26.00	14.0	76.0
CASING JOINT(S)	7.000	K-55	23.00	76.0	5,264.0
CASING JOINT(S)	7.000	K-55	26.00	5,264.0	7,840.4
FLOAT COLLAR	7.000	K-55	26.00	7,840.4	7,841.8
CASING JOINT(S)	7.000	K-55	26.00	7,841.8	7,881.8
GUIDE SHOE	7.000	K-55	26.00	7,881.8	7,884.0

LINER — Report Date: 5/28/2003 00:00

Item	OD (in)	Grade	Wt. (ppf)	TopMD (ft)	BtmMD (ft)
TIE BACK RECEPTACLE	5.000			5,058.1	5,068.6
LINER HANGER PACKER	5.000			5,068.6	5,071.1
PBR	5.000			5,071.1	5,081.0
LINER HANGER	5.000			5,081.0	5,088.2
CROSSOVER	5.000	P-110	18.00	5,088.2	5,093.1
CASING JOINT(S)	5.000	P-110	18.00	5,093.1	7,608.3
LANDING COLLAR	5.000			7,608.3	7,608.3
CASING JOINT(S)	5.000	P-110	18.00	7,608.3	7,649.1
FLOAT COLLAR	5.000			7,649.1	7,649.1
CASING JOINT(S)	5.000	P-110	18.00	7,649.1	7,689.4
FLOAT SHOE	5.000			7,689.4	7,690.0

Well: 353-34S-ST1 S/T/R: 34S/30S/24E

CASING CEMENT DETAIL
- - -
Sfc Csg. Cmt Vol.: 500 cf
Hole Size: 17-1/2" (13-3/8" Casing)
Top Job: No
Rtns to Sfc: YES
TTOC: NA
- - -

Interm Csg. Cmt Vol.: 1655 cf
Hole Size: 12-1/4' (9-5/8" Casing)
Top Job: NO
Rtns to Sfc: YES
TTOC: NA
- - -

Prod. Csg. Cmt Vol.: 1750 cf
Hole Size: 8-3/4" (7" Casing)
Top Job: NO
Rtns to Sfc: NO
TTOC: Surface
- - -

Liner Cmt Vol.: 380 cf
Hole Size: 6-1/8" (5" Liner)
Top Job: NO
Rtns to Sfc : NO
TTOC: 2133'
- - -
Top of Formation:
UBA: 7363'
BLW: 7734'

Volume Behind Pipe:
1.3 Yield Assumed
Theoretical Calculations (TTOC)

OCCIDENTAL OF ELK HILLS INC

353-3G

Event: WELL MAINT - RIGLESS
Event End: 8/8/2005 00:00
Sec. Reason: ANNUAL IDLE WELL SURVEY

Ground Level: 882.0ft
KB to Ground: 15.0ft
Datum: ORIGINAL KB @ 897.00ft (default)
API No.: 0402955610

Wellbore: ORIGINAL HOLE
Top TMD: 15.0ft
PBMD: 7,833.0ft
Btm TMD: 7,900.0ft
Spud Date: 12/3/1976 00:00
BH Coord X: 6,148,412.90uss ft BH Coord Y: 2,284,895.40uss

Casing Shoes (ft) | Schematic (9/1/2005) | Openings Top/Btm/Type/Status

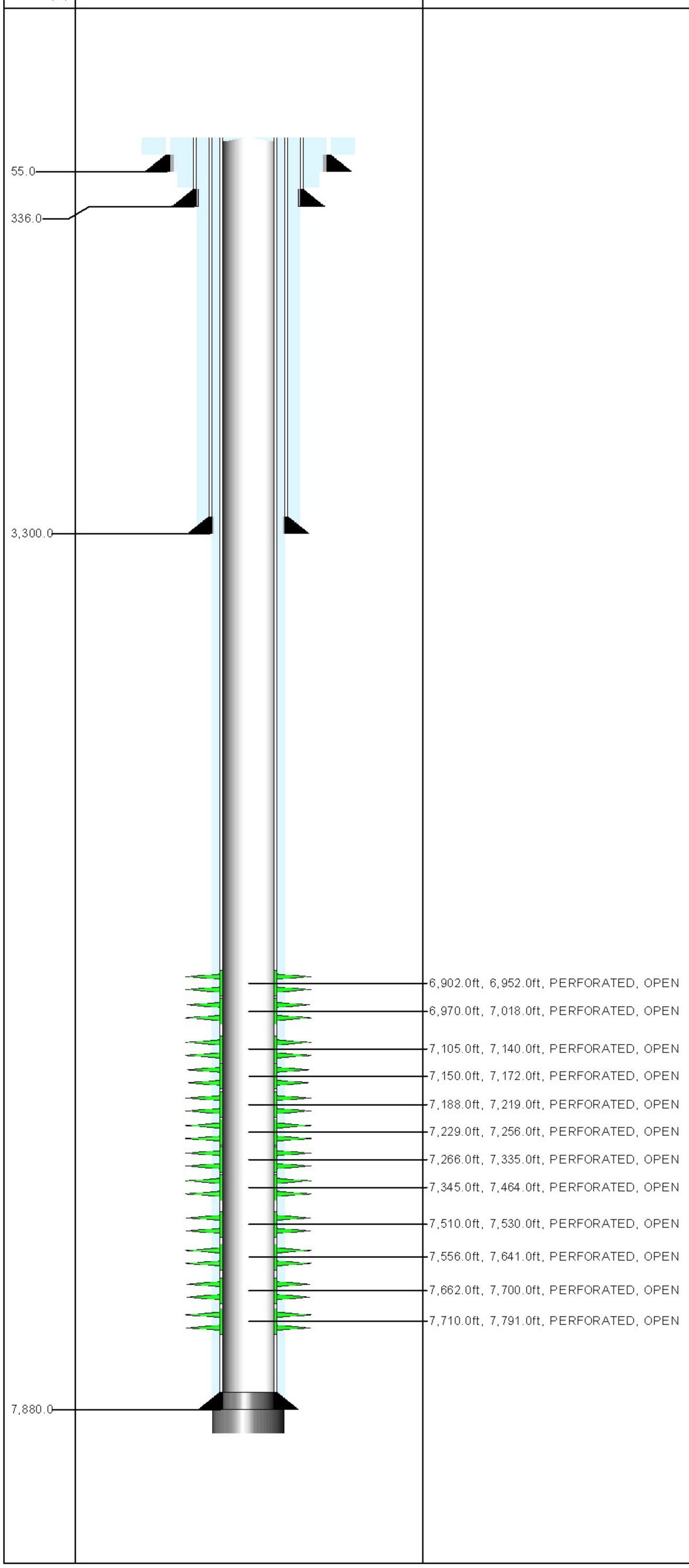

TUBING STRING Report Date: 5/22/1995 00:00

Component	Top MD (ft)	Btm MD (ft)
TH-SGL	15.0	15.6
TBGJNT	15.6	45.6

PLUG BACK Report Date: 4/22/1977 00:00

Component	Top MD (ft)	Btm MD (ft)
CEMENT	7,833.0	7,880.0

PLUG BACK Report Date: 4/21/1977 00:00

Component	Top MD (ft)	Btm MD (ft)
CEMENT	7,880.0	7,900.0

CONDUCTOR CASING Report Date: 12/3/1976 00:00

Item Description	Btm MD(ft)
CASING JOINT(S) 20 in,	55.0

SURFACE CASING Report Date: 4/1/1977 00:00

Item Description	Btm MD (ft)
CASING JOINT(S) 13.375 in, , H-40, 48	336.0

INTERMEDIATE CASING Report Date: 4/4/1977 00:00

Item Description	Btm MD (ft)
CASING JOINT(S) 9.625 in, , K-55, 40	3,300.0

PRODUCTION CASING Report Date: 4/21/1977 00:00

Item Description	Btm MD (ft)
CASING JOINT(S) 7 in, , K-55, 26	86.0
CASING JOINT(S) 7 in, , K-55, 23	5,214.0
CASING JOINT(S) 7 in, , K-55, 26	6,470.4
FLAG JOINT 7 in, , K-55, 26	6,493.8
CASING JOINT(S) 7 in, , K-55, 26	7,880.0

Well: 353-3G S/T/R: 3G/31S/24E

CASING CEMENT DETAIL
- - -
Sfc Csg. Cmt Vol.: 410 cf
Hole Size: 17.5"
Top Job: No
Rtns to Sfc: 75 cf
TOC: Sfc
- - -

Interm Csg. Cmt Vol.: 1550 cf
Hole Size: 12.25"
Top Job: Yes
Rtns to Sfc: 15 cf
TOC: Sfc
- - -

Prod. Csg. Cmt Vol.: 1700 cf
Hole Size: 8.75"
Top Job: No
Rtns to Sfc: Trace
TOC: Sfc
- - -

Liner Cmt Vol.:
Hole Size:
Top Job:
Rtns to Sfc:
TTOC:
- - -
Top of Formation:
UBA: 7181'
BLW: 7810'

Volume Behind Pipe:
1.3 Yield Assumed
Theoretical Calculations (TTOC)

Event: WELL MAINT - RIG
Event End:
Sec. Reason:
End Status:
Well Classification: DEVELOPMENT

OCCIDENTAL OF ELK HILLS INC

353H-35S

Ground Level: 699.0ft
Datum: ORIGINAL KB @ 716.00ft (default)
API No.: 0402958238

Wellbore: ORIGINAL HOLE
PBMD: 6,797.0ft
Btm TMD: 8,545.0ft
Spud Date: 5/15/1978 00:00
BH Coord X: 6,153,373.60uss ft
BH Coord Y: 2,289,764.40uss ft

asing Shoes (ft)	Schematic (10/1/2009)	Openings Top/Btm/Type/Status

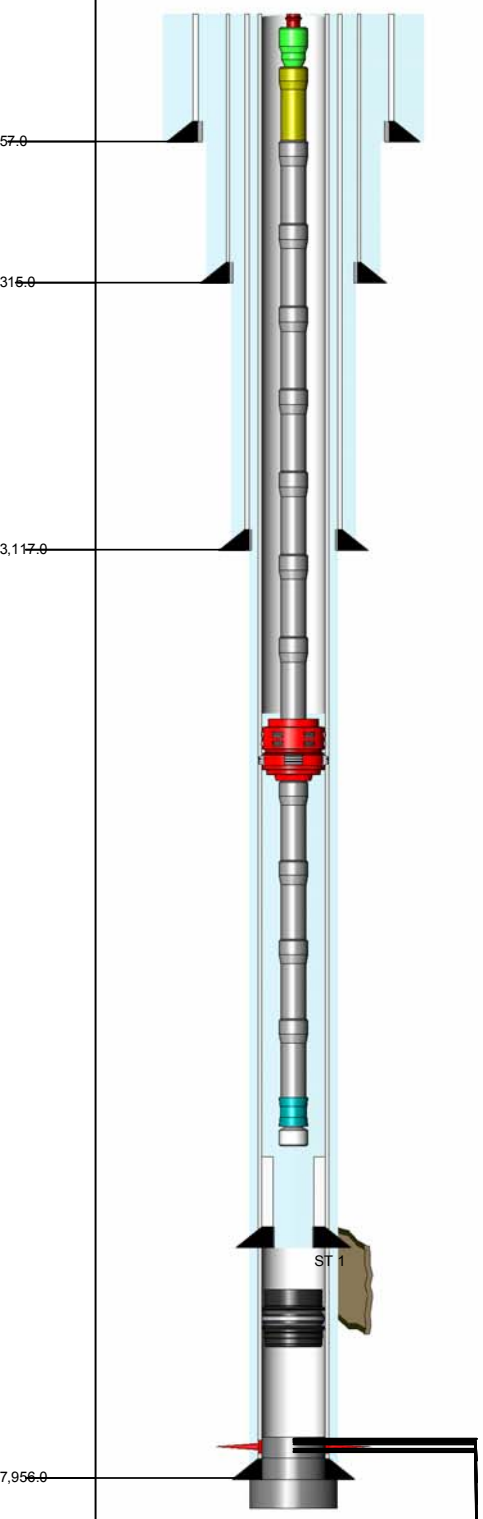

6,997.0ft, 7,003.0ft, PERFORATED, ABANDON
7,027.0ft, 7,050.0ft, PERFORATED, ABANDON
7,070.0ft, 7,090.0ft, PERFORATED, ABANDON
7,126.0ft, 7,152.0ft, PERFORATED, ABANDON
7,158.0ft, 7,214.0ft, PERFORATED, ABANDON
7,237.0ft, 7,298.0ft, PERFORATED, ABANDON
7,460.0ft, 7,540.0ft, PERFORATED, ABANDON
7,595.0ft, 7,630.0ft, PERFORATED, ABANDON
7,648.0ft, 7,658.0ft, PERFORATED, ABANDON

ROD STRING Report Date: 5/18/2005 00:00

Component	Top MD (ft)	Btm MD (ft)
POLRDL	13.0	49.0
PNYROD	49.0	67.0
ROD	67.0	2,527.0
ROD	2,527.0	2,797.0
R-4PER	2,797.0	3,157.0
ROD	3,157.0	6,517.0
INSPMP	6,517.0	6,517.0

TUBING STRING Report Date: 5/18/2005 00:00

Component	Top MD (ft)	Btm MD (ft)
TH-DBB	17.0	17.7
FATNIP	17.7	18.4
PUPJNT	18.4	30.6
TBGJNT	30.6	6,487.8
AC	6,487.8	6,490.1
TBGJNT	6,490.1	6,521.6
STNIP	6,521.6	6,522.3
PMPJKT	6,522.3	6,549.0

PLUG BACK Report Date: 11/2/1999 00:00

Component	Top MD (ft)	Btm MD (ft)
BP-RET	6,797.0	6,799.0

PLUG BACK Report Date: 10/29/1999 00:00

Component	Top MD (ft)	Btm MD (ft)
CEMENT	6,869.0	7,905.0

PLUG BACK Report Date: 12/16/1978 00:00

Component	Top MD (ft)	Btm MD (ft)
CEMENT	7,905.0	7,956.0

PLUG BACK Report Date: 12/14/1978 00:00

Component	Top MD (ft)	Btm MD (ft)
CEMENT	7,956.0	7,968.0

CONDUCTOR CASING Report Date: 5/15/1978 00:00

Item	OD (in)	Grade	Wt. (ppf)	TopMD (ft)	BtmMD (ft)
CASING JOINT(S)	20.000			17.0	57.0

SURFACE CASING Report Date: 11/8/1978 00:00

Item	OD (in)	Grade	Wt. (ppf)	TopMD (ft)	BtmMD (ft)
CASING JOINT(S)	13.375	H-40	48.00	17.0	273.3
FLOAT COLLAR	13.375	H-40	48.00	273.3	273.3
CASING JOINT(S)	13.375	H-40	48.00	273.3	314.0
FLOAT SHOE	13.375	H-40	48.00	314.0	315.0

INTERMEDIATE CASING Report Date: 11/15/1978 00:00

Item	OD (in)	Grade	Wt. (ppf)	TopMD (ft)	BtmMD (ft)
CASING JOINT(S)	9.625	N-80	40.00	17.0	3,074.0
FLOAT COLLAR	9.625	N-80	40.00	3,074.0	3,074.0
CASING JOINT(S)	9.625	N-80	40.00	3,074.0	3,116.0
FLOAT SHOE	9.625	N-80	40.00	3,116.0	3,117.0

PRODUCTION CASING Report Date: 12/14/1978 00:00

Item	OD (in)	Grade	Wt. (ppf)	TopMD (ft)	BtmMD (ft)
CASING JOINT(S)	7.000	K-55	26.00	17.0	76.0
CASING JOINT(S)	7.000	K-55	23.00	76.0	5,219.0
CASING JOINT(S)	7.000	K-55	26.00	5,219.0	6,505.0
FLAG JOINT	7.000	K-55	26.00	6,505.0	6,523.2
CASING JOINT(S)	7.000	K-55	26.00	6,523.2	7,910.2
FLOAT COLLAR	7.000	K-55	26.00	7,910.2	7,911.9
CASING JOINT(S)	7.000	K-55	26.00	7,911.9	7,953.8
FLOAT SHOE	7.000	K-55	26.00	7,953.8	7,956.0

LINER Report Date: 12/11/1999 00:00

Item	OD (in)	Grade	Wt. (ppf)	TopMD (ft)	BtmMD (ft)
TIE BACK	6.276		11.60	6,578.5	6,581.1
CASING JOINT(S)	4.500	N-80	11.60	6,581.1	7,852.4
CROSSOVER	4.500	N-80	9.30	7,852.4	7,853.2
CASING JOINT(S)	3.500	L-80	9.30	7,853.2	7,884.7
PUP JOINT	3.500	N-80	9.30	7,884.7	7,889.5
CROSSOVER	3.500	N-80	9.30	7,889.5	7,889.9
FLAPPER VALVE	3.500			7,889.9	7,894.0
CROSSOVER	3.500	N-80	9.30	7,894.0	7,894.6
PUP JOINT	3.500	N-80	9.30	7,894.6	7,910.5
ECP	6.000	N-80	9.30	7,910.5	7,921.2
PUP JOINT	3.500	N-80	9.30	7,921.2	7,926.2
FLOAT COLLAR	3.500			7,926.2	7,927.6
CASING JOINT(S)	3.500	L-80	9.30	7,927.6	7,959.0
SLOTTED LINER	3.500	L-80	9.30	7,959.0	8,550.6
FLOAT SHOE	3.500	N-80	9.30	8,550.6	8,570.8

Well: 353H-35S S/T/R: 35S/30S/24E

CASING CEMENT DETAIL
- - -

Sfc Csg. Cmt Vol.: 450 cf
Hole Size: 15" (Est)
Top Job: No
Rtns to Sfc: 46 cf
TTOC: Surface
- - -

Interm Csg. Cmt Vol.: 1795 cf
Hole Size: 12.25"
Top Job: No
Rtns to Sfc: 80 cf
TTOC: Surface
- - -

Prod. Csg. Cmt Vol.: 2385 cf
Hole Size: 9.875"
Top Job: No
Rtns to Sfc: No
TTOC: 7101'
- - -

Liner Cmt Vol.: 46 cf
Hole Size: 6-1/8' (4-1/2" Liner - 640')
Top Job: NO
Rtns to Sfc : NO
TTOC: Topf of Liner
- - -

Top of Formation:
UBA: 7136'
BLW: 7578'
- - -

Volume Behind Pipe:
1.3 Yield Assumed
Theoretical Calculations (TTOC)

OCCIDENTAL OF ELK HILLS INC

353H-35S RD1

Event: WELL MAINT - RIG
Event End:
Sec. Reason:
End Status:
Well Classification: DEVELOPMENT

Ground Level: 699.0ft
Datum: ORIGINAL KB @ 716.00ft (default)
API No.: 0402958238

Wellbore: ST 1
PBMD: 6,980.0ft
Btm TMD: 8,945.0ft
Spud Date: 5/15/1978 00:00
BH Coord X: 6,151,422.35uss ft
BH Coord Y: 2,289,754.94uss ft

Casing Shoes (ft) | Schematic (10/1/2009) | Openings Top/Btm/Type/Status

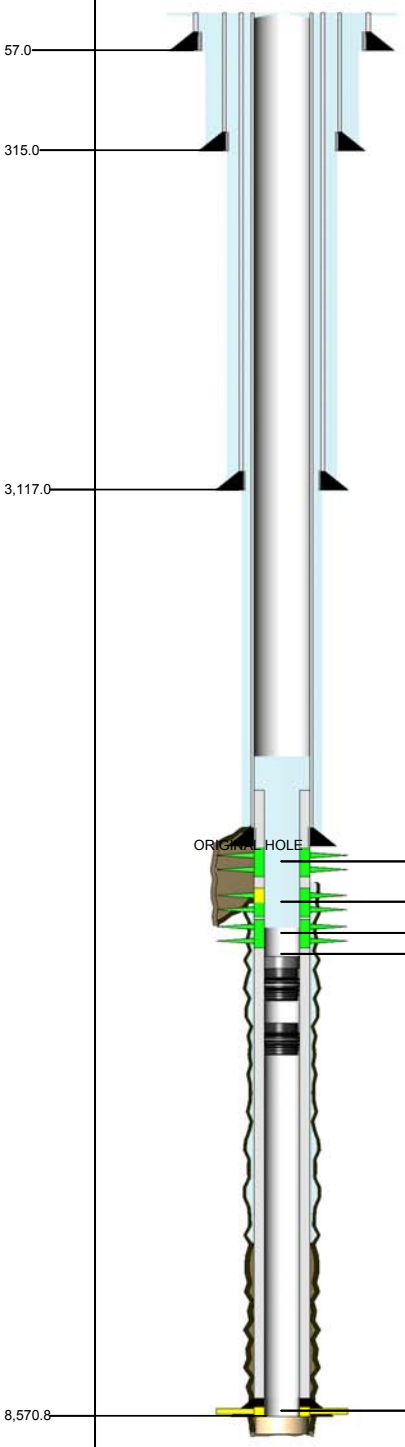

6,708.0ft, 6,718.0ft, PERFORATED, OPEN
6,850.0ft, 6,862.0ft, PERFORATED, OPEN
6,891.0ft, 6,936.0ft, PERFORATED, OPEN
6,970.0ft, 6,972.0ft, SQZ PERFS, SQUEEZ
7,959.0ft, 8,550.0ft, SLOTTED, ISOLATED

ROD STRING Report Date: 5/18/2005 00:00

Component	Top MD (ft)	Btm MD (ft)
POLRDL	13.0	49.0
PNYROD	49.0	67.0
ROD	67.0	2,527.0
ROD	2,527.0	2,797.0
R-4PER	2,797.0	3,157.0
ROD	3,157.0	6,517.0
INSPMP	6,517.0	6,517.0

TUBING STRING Report Date: 5/18/2005 00:00

Component	Top MD (ft)	Btm MD (ft)
TH-DBB	17.0	17.7
FATNIP	17.7	18.4
PUPJNT	18.4	30.6
TBGJNT	30.6	6,487.8
AC	6,487.8	6,490.1
TBGJNT	6,490.1	6,521.6
STNIP	6,521.6	6,522.3
PMPJKT	6,522.3	6,549.0

PLUG BACK Report Date: 8/25/2002 00:00

Component	Top MD (ft)	Btm MD (ft)
CEMENT	6,980.0	6,982.0

PLUG BACK Report Date: 8/17/2002 00:00

Component	Top MD (ft)	Btm MD (ft)
BP-DR	6,982.0	6,984.4

PLUG BACK Report Date: 8/13/2002 00:00

Component	Top MD (ft)	Btm MD (ft)
BP-DR	6,986.0	6,988.4

PLUG BACK Report Date: 12/11/1999 00:00

Component	Top MD (ft)	Btm MD (ft)
MUD	8,570.8	8,945.0

CONDUCTOR CASING Report Date: 5/15/1978 00:00

Item	OD (in)	Grade	Wt. (ppf)	TopMD (ft)	BtmMD (ft)
CASING JOINT(S)	20.000			17.0	57.0

SURFACE CASING Report Date: 11/8/1978 00:00

Item	OD (in)	Grade	Wt. (ppf)	TopMD (ft)	BtmMD (ft)
CASING JOINT(S)	13.375	H-40	48.00	17.0	273.3
FLOAT COLLAR	13.375	H-40	48.00	273.3	273.3
CASING JOINT(S)	13.375	H-40	48.00	273.3	314.0
FLOAT SHOE	13.375	H-40	48.00	314.0	315.0

INTERMEDIATE CASING Report Date: 11/15/1978 00:00

Item	OD (in)	Grade	Wt. (ppf)	TopMD (ft)	BtmMD (ft)
CASING JOINT(S)	9.625	N-80	40.00	17.0	3,074.0
FLOAT COLLAR	9.625	N-80	40.00	3,074.0	3,074.0
CASING JOINT(S)	9.625	N-80	40.00	3,074.0	3,116.0
FLOAT SHOE	9.625	N-80	40.00	3,116.0	3,117.0

PRODUCTION CASING Report Date: 12/14/1978 00:00

Item	OD (in)	Grade	Wt. (ppf)	TopMD (ft)	BtmMD (ft)
CASING JOINT(S)	7.000	K-55	26.00	17.0	76.0
CASING JOINT(S)	7.000	K-55	23.00	76.0	5,219.0
CASING JOINT(S)	7.000	K-55	26.00	5,219.0	6,505.0
FLAG JOINT	7.000	K-55	26.00	6,505.0	6,523.2
CASING JOINT(S)	7.000	K-55	26.00	6,523.2	7,910.2
FLOAT COLLAR	7.000	K-55	26.00	7,910.2	7,911.9
CASING JOINT(S)	7.000	K-55	26.00	7,911.9	7,953.8
FLOAT SHOE	7.000	K-55	26.00	7,953.8	7,956.0

LINER Report Date: 12/11/1999 00:00

Item	OD (in)	Grade	Wt. (ppf)	TopMD (ft)	BtmMD (ft)
TIE BACK	6.276		11.60	6,578.5	6,581.1
CASING JOINT(S)	4.500	N-80	11.60	6,581.1	7,852.4
CROSSOVER	4.500	N-80	9.30	7,852.4	7,853.2
CASING JOINT(S)	3.500	L-80	9.30	7,853.2	7,884.7
PUP JOINT	3.500	N-80	9.30	7,884.7	7,889.5
CROSSOVER	3.500	N-80	9.30	7,889.5	7,889.9
FLAPPER VALVE	3.500			7,889.9	7,894.0
CROSSOVER	3.500	N-80	9.30	7,894.0	7,894.6
PUP JOINT	3.500	N-80	9.30	7,894.6	7,910.5
ECP	6.000	N-80	9.30	7,910.5	7,921.2
PUP JOINT	3.500	N-80	9.30	7,921.2	7,926.2
FLOAT COLLAR	3.500			7,926.2	7,927.6
CASING JOINT(S)	3.500	L-80	9.30	7,927.6	7,959.0
SLOTTED LINER	3.500	L-80	9.30	7,959.0	8,550.6
FLOAT SHOE	3.500	N-80	9.30	8,550.6	8,570.8

Well: 353H-35S RD1 S/T/R: 35S/30S/24E

CASING CEMENT DETAIL
- - -

Sfc Csg. Cmt Vol: 450cuft
Hole Size: 1.500"
Top Job: No
Rtns to Sfc: Yes
TOC: Surface
- - -

Interm Csg. Cmt Vol: 1795cuft
Hole Size: 12.250"
Top Job: Yes
Rtns to Sfc: No
TOC: Surface
- - -

Prod. Csg. Cmt Vol: 2385cuft
Hole Size: 8.750"
Top Job: No
Rtns to Sfc: No
TTOC: 2750' (CBL0
- - -

Liner Cmt Vol: Slotted liner
Hole Size: 7" casing
Top Job: N/A
Rtns to Sfc : N/A
TTOC: N/A
- - -

Top of Formation:
UBA: 7233'
BLW: N/A
- - -

Volume Behind Pipe:
1.3 Yield Assumed
Theoretical Calculations (TTOC)

OCCIDENTAL OF ELK HILLS INC

354-34S

Event: WELL MAINT - RIGLESS
Event End: 3/9/2008 00:00
Sec. Reason: POST-FRAC OPTIKLEEN TREATMENT
End Status: FINISHED - UNSUCCESSFUL
Well Classification: DEVELOPMENT

Ground Level: 885.0ft
Datum: ORIGINAL KB @ 898.00ft (default)
API No.: 0402967594

Wellbore: ORIGINAL HOLE
PBMD: 7,502.0ft
Btm TMD: 7,567.0ft
Spud Date: 7/29/1982 00:00
BH Coord X: 6,148,328.13uss ft
BH Coord Y: 2,289,487.09uss ft

Casing Shoes (ft)	Schematic (3/9/2008)	Openings Top/Btm/Type/Status

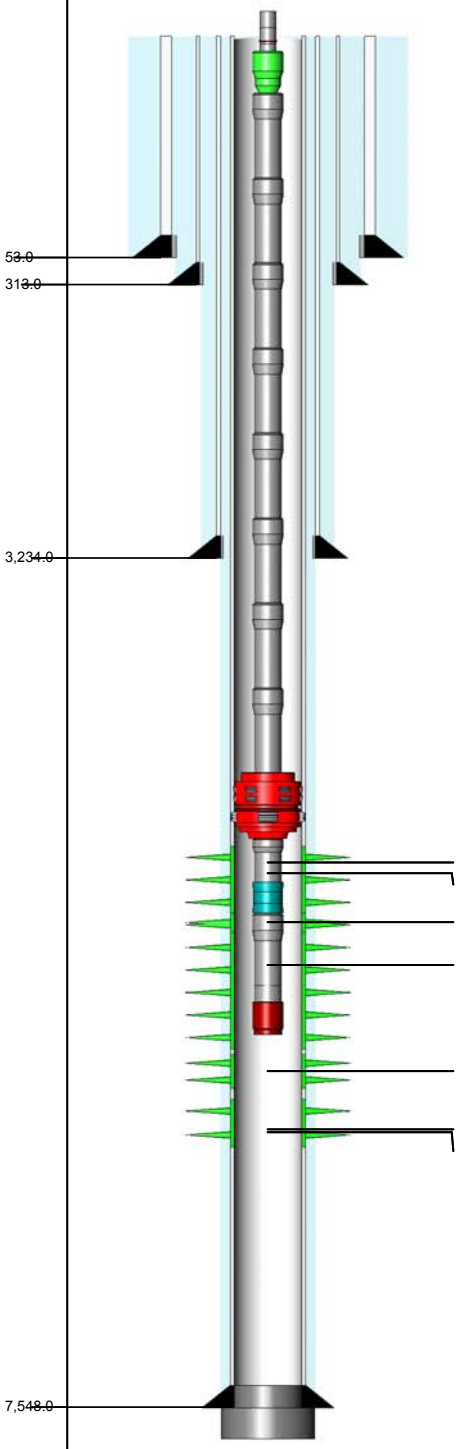

7,041.0ft, 7,060.0ft, PERFORATED, OPEN
7,053.0ft, 7,060.0ft, PERFORATED, OPEN
7,088.0ft, 7,093.0ft, PERFORATED, OPEN
7,085.0ft, 7,140.0ft, PERFORATED, OPEN
7,149.0ft, 7,154.0ft, PERFORATED, OPEN
7,199.0ft, 7,204.0ft, PERFORATED, OPEN
7,170.0ft, 7,240.0ft, PERFORATED, OPEN

ROD STRING Report Date: 5/24/2005 00:00

Component	Top MD (ft)	Btm MD (ft)
POLROD	9.0	39.0
ROD	39.0	2,649.0
ROD	2,649.0	7,089.0
RSTBAR	7,089.0	7,093.0
INSPMP	7,093.0	

TUBING STRING Report Date: 5/24/2005 00:00

Component	Top MD (ft)	Btm MD (ft)
TH-DBB	13.0	13.7
FATNIP	13.7	14.3
TBGJNT	14.3	6,897.3
AC	6,897.3	6,900.2
TBGJNT	6,900.2	7,085.9
STNIP	7,085.9	7,086.6
TBGJNT	7,086.6	7,117.9
STCOLL	7,117.9	7,118.3

CASING PATCH Report Date: 12/2/1982 00:00

Component	Top MD (ft)	Btm MD (ft)
CEMENT	7,502.0	7,548.0

PLUG BACK Report Date: 10/22/1982 00:00

Component	Top MD (ft)	Btm MD (ft)
CEMENT	7,548.0	7,567.0

CONDUCTOR CASING Report Date: 7/29/1982 00:00

Item	OD (in)	Grade	Wt. (ppf)	TopMD (ft)	BtmMD (ft)
CASING JOINT(S)	20.000			13.0	53.0

SURFACE CASING Report Date: 10/1/1982 00:00

Item	OD (in)	Grade	Wt. (ppf)	TopMD (ft)	BtmMD (ft)
CASING JOINT(S)	13.375	H-40	48.00	13.0	313.0

INTERMEDIATE CASING Report Date: 10/6/1982 00:00

Item	OD (in)	Grade	Wt. (ppf)	TopMD (ft)	BtmMD (ft)
CASING JOINT(S)	9.625	K-55	40.00	13.0	3,234.0

PRODUCTION CASING Report Date: 10/22/1982 00:00

Item	OD (in)	Grade	Wt. (ppf)	TopMD (ft)	BtmMD (ft)
CASING JOINT(S)	7.000	N-80	26.00	13.0	73.1
CASING JOINT(S)	7.000	K-55	23.00	73.1	4,946.9
CASING JOINT(S)	7.000	K-55	26.00	4,946.9	6,460.1
FLAG JOINT	7.000	K-55	26.00	6,460.1	6,474.9
CASING JOINT(S)	7.000	K-55	26.00	6,474.9	6,629.6
CASING JOINT(S)	7.000	N-80	26.00	6,629.6	7,501.7
FLOAT COLLAR	7.000	N-80	26.00	7,501.7	7,504.2
CASING JOINT(S)	7.000	N-80	26.00	7,504.2	7,545.9
FLOAT SHOE	7.000	N-80	26.00	7,545.9	7,548.0

Well: 354-34S S/T/R: 34S/30S/24E

CASING CEMENT DETAIL
- - -
Sfc Csg. Cmt Vol.: 450 cf
Hole Size: 17-1/2" (13-3/8" Casing)
Top Job: No
Rtns to Sfc: YES
TTOC: NA
- - -

Interm Csg. Cmt Vol.: 1400 cf
Hole Size: 12-1/4" (9-5/8" Casing)
Top Job: NO
Rtns to Sfc: YES
TTOC: NA
- - -

Prod. Csg. Cmt Vol.: 1500 cf
Hole Size: 8-3/4" (7" Casing)
Top Job: NO
Rtns to Sfc: NO
TTOC: Surface
- - -

Liner Cmt Vol.: None
Hole Size:
Top Job:
Rtns to Sfc :
TTOC:
- - -
Top of Formation:
UBA: 7040'
BLW: 7368'

Volume Behind Pipe:
1.3 Yield Assumed
Theoretical Calculations (TTOC)

Event: WELL MAINT - RIG
Event End: 5/4/2009 00:00
Sec. Reason: SCALED
End Status: FINISHED - SUCCESS
Well Classification: DEVELOPMENT - CLASS III

OCCIDENTAL OF ELK HILLS INC

354-35S

Water Depth: 708.1ft
Datum: ORIGINAL KB @ 727.10ft (default)
API No.: 0403037071

Wellbore: ORIGINAL HOLE
PBMD: 7,619.0ft
Btm TMD: 7,750.0ft
Spud Date: 11/5/2008 10:00
BH Coord X: 6,153,525.97uss ft
BH Coord Y: 2,289,362.67uss ft

asing Shoes (ft)	Schematic (5/4/2009)	Openings Top/Btm/Type/Status

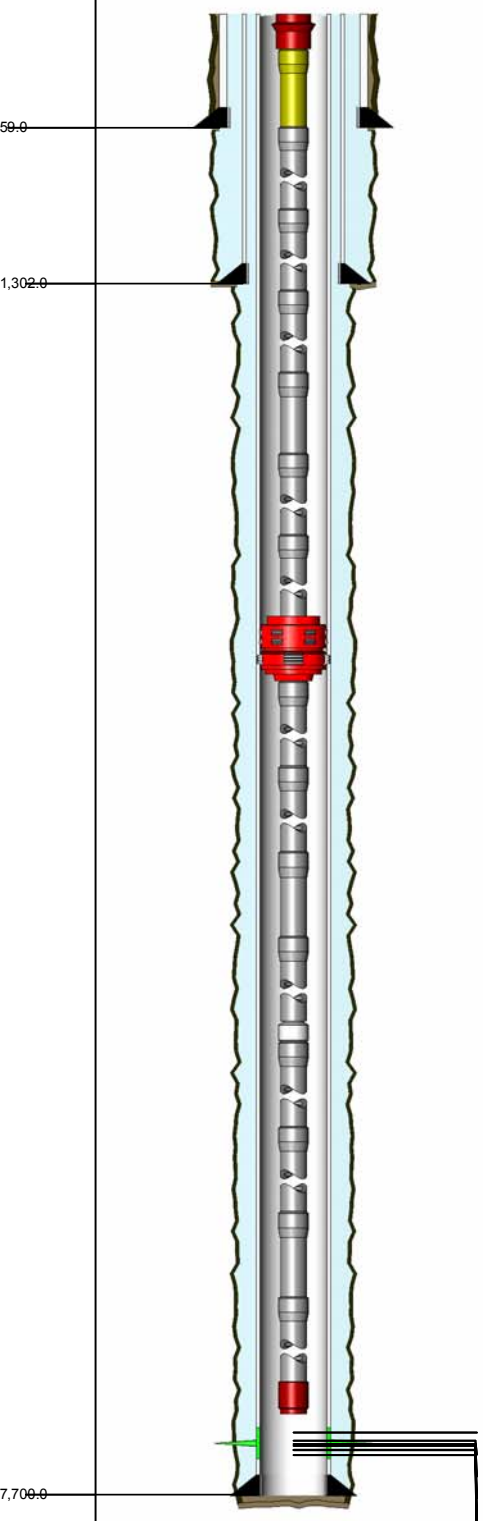

7,368.0ft, 7,424.0ft, PERFORATED, OPEN
7,428.0ft, 7,446.0ft, PERFORATED, OPEN
7,450.0ft, 7,456.0ft, PERFORATED, OPEN
7,456.0ft, 7,466.0ft, PERFORATED, OPEN
7,478.0ft, 7,484.0ft, PERFORATED, OPEN
7,473.0ft, 7,493.0ft, PERFORATED, OPEN
7,496.0ft, 7,519.0ft, PERFORATED, OPEN

ROD STRING Report Date: 4/27/2009 00:00

Component	Top MD (ft)	Btm MD (ft)
POLRDL	0.0	36.0
PNYROD	36.0	60.0
ROD	60.0	1,290.0
R-4PER	1,290.0	2,430.0
R-4PER	2,430.0	3,120.0
R-4PER	3,120.0	4,440.0
R-4PER	4,440.0	7,290.0
RSTBAR	7,290.0	7,294.0
INSPMP	7,294.0	7,300.0

TUBING STRING Report Date: 4/28/2009 00:00

Component	Top MD (ft)	Btm MD (ft)
TH-DBB	19.0	19.8
PUPJNT	19.8	34.2
CAS	34.2	6,949.4
AC	6,949.4	6,951.7
CAS	6,951.7	7,267.5
PMPSH	7,267.5	7,268.1
CAS	7,268.1	7,299.7
STCOLL	7,299.7	7,300.3

CONDUCTOR CASING Report Date: 10/23/2008 00:00

Item	OD (in)	Grade	Wt. (ppf)	TopMD (ft)	BtmMD (ft)
CASING JOINT(S)	14.000			19.0	59.0

SURFACE CASING Report Date: 11/6/2008 00:00

Item	OD (in)	Grade	Wt. (ppf)	TopMD (ft)	BtmMD (ft)
CASING JOINT(S)	9.625	K-55	36.00	19.0	1,256.7
INSERT FLOAT	9.625	K-55	36.00	1,256.7	1,256.8
CASING JOINT(S)	9.625	K-55	36.00	1,256.8	1,300.8
GUIDE SHOE	9.625	K-55	36.00	1,300.8	1,302.0

PRODUCTION CASING Report Date: 11/21/2008 00:00

Item	OD (in)	Grade	Wt. (ppf)	TopMD (ft)	BtmMD (ft)
CASING JOINT(S)	7.000	K-55	23.00	19.0	3,916.5
CASING JOINT(S)	7.000	N-80	26.00	3,916.5	6,383.3
PUP JOINT	7.000	N-80	26.00	6,383.3	6,397.5
CASING JOINT(S)	7.000	N-80	26.00	6,397.5	7,115.1
CASING JOINT(S)	7.000	N-80	26.00	7,115.1	7,619.2
FLOAT COLLAR	7.000		29.00	7,619.2	7,620.5
CASING JOINT(S)	7.000	N-80	26.00	7,620.5	7,698.7
FLOAT SHOE	7.000		29.00	7,698.7	7,700.0

Well: 354-35S S/T/R: 35S/30S/24E

CASING CEMENT DETAIL
- - -

Sfc Csg. Cmt Vol.: 471 sx
Hole Size: 13.5"
Top Job: No
Rtns to Sfc: 40 Bbls
TTOC: Surface
- - -

Interm Csg. Cmt Vol.:
Hole Size:
Top Job:
Rtns to Sfc:
TTOC:
- - -

Prod. Csg. Cmt Vol.: 1244 sx
Hole Size: 9.5"
Top Job: No
Rtns to Sfc: No
TTOC: 271'
- - -

Liner Cmt Vol.:
Hole Size:
Top Job:
Rtns to Sfc :
TTOC:
- - -

Top of Formation:
UBA: 7038'
BLW: 7547'
- - -

Volume Behind Pipe:
1.3 Yield Assumed
Theoretical Calculations (TTOC)

OCCIDENTAL OF ELK HILLS INC

354-3G

Event: WELL MAINT - RIG
Event End: 9/27/2006 00:00
Sec. Reason: LOW PRODUCTION

Ground Elev: 891.0ft
KB to Ground: 9.0ft
Datum: ORIGINAL KB @ 900.00ft (default)
API No.: 0402929023

Wellbore: ORIGINAL HOLE
Top TMD: 9.0ft
PBMD: 7,300.0ft
Btm TMD: 8,000.0ft
Spud Date: 2/1/1952 00:00
BH Coord X: 6,148,488.00uss ft BH Coord Y: 2,284,262.00uss

Casing Shoes (ft) | Schematic (10/1/2006) | Openings Top/Btm/Type/Status

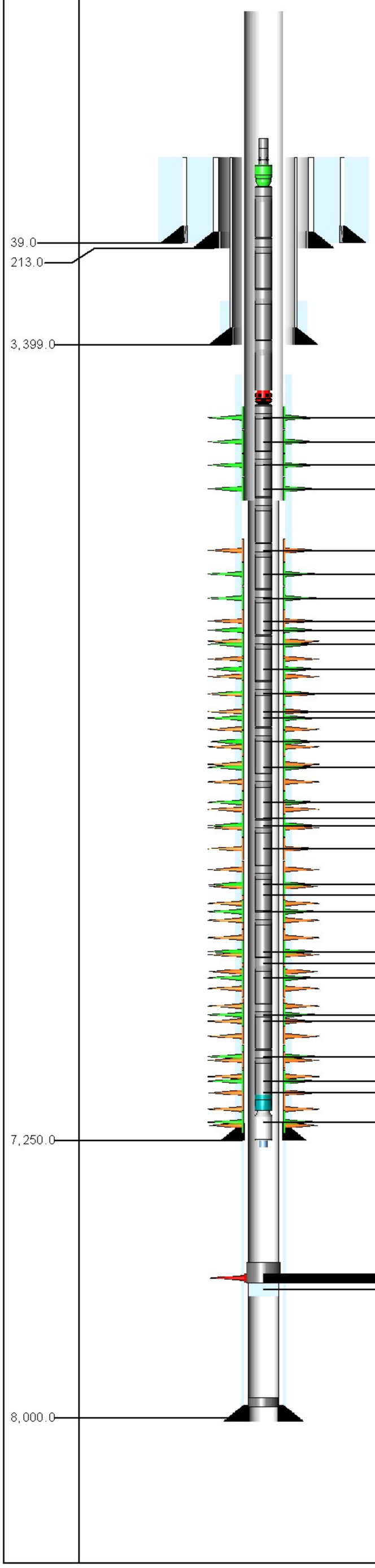

6,161.0ft, 6,170.0ft, PERFORATED, OPEN
6,247.0ft, 6,257.0ft, PERFORATED, OPEN
6,298.0ft, 6,305.0ft, PERFORATED, OPEN
6,364.0ft, 6,374.0ft, PERFORATED, OPEN
6,450.0ft, 6,451.0ft, PERFORATED, SQUEE
6,503.0ft, 6,518.0ft, PERFORATED, OPEN
6,606.0ft, 6,646.0ft, PERFORATED, OPEN
6,660.0ft, 6,700.0ft, PERFORATED, SQUEE
6,692.0ft, 6,701.0ft, PERFORATED, OPEN
6,712.0ft, 6,721.0ft, PERFORATED, OPEN
6,727.0ft, 6,731.0ft, PERFORATED, OPEN
6,736.0ft, 6,739.0ft, PERFORATED, OPEN
6,710.0ft, 6,785.0ft, PERFORATED, SQUEE
6,744.0ft, 6,749.0ft, PERFORATED, OPEN
6,751.0ft, 6,756.0ft, PERFORATED, OPEN
6,762.0ft, 6,775.0ft, PERFORATED, OPEN
6,798.0ft, 6,803.0ft, PERFORATED, OPEN
6,800.0ft, 6,830.0ft, PERFORATED, SQUEE
6,822.0ft, 6,825.0ft, PERFORATED, OPEN
6,855.0ft, 6,930.0ft, PERFORATED, SQUEE
7,011.0ft, 7,017.0ft, PERFORATED, OPEN
6,960.0ft, 7,054.0ft, PERFORATED, SQUEE
7,033.0ft, 7,038.0ft, PERFORATED, OPEN
7,108.0ft, 7,114.0ft, PERFORATED, OPEN
7,064.0ft, 7,153.0ft, PERFORATED, SQUEE
7,126.0ft, 7,134.0ft, PERFORATED, OPEN
7,171.0ft, 7,175.0ft, PERFORATED, OPEN
7,166.0ft, 7,189.0ft, PERFORATED, SQUEE
7,196.0ft, 7,206.0ft, PERFORATED, OPEN
7,211.0ft, 7,216.0ft, PERFORATED, OPEN
7,199.0ft, 7,237.0ft, PERFORATED, SQUEE
7,227.0ft, 7,235.0ft, PERFORATED, OPEN
7,418.0ft, 7,455.0ft, PERFORATED, ABAND
7,418.1ft, 7,455.1ft, PERFORATED, ABAND
7,475.0ft, 7,525.0ft, PERFORATED, ABAND
7,475.1ft, 7,525.1ft, PERFORATED, ABAND
7,540.0ft, 7,605.0ft, PERFORATED, ABAND
7,545.1ft, 7,605.1ft, PERFORATED, ABAND
7,625.0ft, 7,695.0ft, PERFORATED, ABAND
7,625.1ft, 7,690.1ft, PERFORATED, ABAND
7,710.0ft, 7,745.0ft, PERFORATED, ABAND
7,770.0ft, 7,835.0ft, PERFORATED, ABAND
7,770.1ft, 7,835.1ft, PERFORATED, ABAND
7,860.0ft, 7,880.0ft, PERFORATED, ABAND
7,860.1ft, 7,880.1ft, PERFORATED, ABAND
7,900.1ft, 7,945.1ft, PERFORATED, ABAND
7,900.0ft, 7,970.0ft, PERFORATED, ABAND

ROD STRING Report Date: 9/27/2006 00:00

Component	Top MD (ft)	Btm MD (ft)
POLROD	0.0	30.0
PNYROD	30.0	38.0
ROD	38.0	2,738.0
ROD	2,738.0	7,238.0
INSPMP	7,238.0	7,262.0

TUBING STRING Report Date: 1/4/2006 00:00

Component	Top MD (ft)	Btm MD (ft)
TH-DBB	9.0	9.6
FATNIP	9.6	10.3
TBGJNT	10.3	6,052.0
AC	6,052.0	6,054.3
TBGJNT	6,054.3	7,217.7
STNIP	7,217.7	7,218.8
PMPJKT	7,218.8	7,250.2

PLUG BACK Report Date: 1/13/2004 00:00

Component	Top MD (ft)	Btm MD (ft)
CEMENT	7,300.0	7,370.0
CEMENT	7,370.0	7,968.0

PLUG BACK Report Date: 1/8/2004 00:00

Component	Top MD (ft)	Btm MD (ft)
CR-PRM	7,370.0	7,372.0

PLUG BACK Report Date: 12/1/1987 00:00

Component	Top MD (ft)	Btm MD (ft)
FILL	7,941.0	7,946.0

PLUG BACK Report Date: 3/1/1986 00:00

Component	Top MD (ft)	Btm MD (ft)
JUNK	7,946.0	7,948.0

PLUG BACK Report Date: 3/12/1978 00:00

Component	Top MD (ft)	Btm MD (ft)
CEMENT	7,985.0	8,000.0

CONDUCTOR CASING Report Date: 10/21/1952 00:00

Item Description	Btm MD(ft)
CASING JOINT(S) 26 in, , 68	39.0

SURFACE CASING Report Date: 11/18/1952 00:00

Item Description	Btm MD (ft)
CASING JOINT(S) 16 in, , 52	213.0

INTERMEDIATE CASING Report Date: 11/23/1952 00:00

Item Description	Btm MD (ft)
CASING JOINT(S) 10.75 in, , J-55, 45.5	48.0
CASING JOINT(S) 10.75 in, , J-55, 40.5	2,172.0
CASING JOINT(S) 10.75 in, , J-55, 45.5	3,399.0

PRODUCTION CASING Report Date: 12/19/1952 00:00

Item Description	Btm MD (ft)
CASING JOINT(S) 7 in, , N-80, 26	75.0
CASING JOINT(S) 7 in, , N-80, 23	5,737.0
CASING JOINT(S) 7 in, , N-80, 26	7,250.0

LINER Report Date: 3/11/1978 00:00

Item Description	Btm MD (ft)
LINER HANGER 6.276 in, , K-55, 20	6,384.0
CASING JOINT(S) 5.5 in, , K-55, 20	7,248.2
CASING JOINT(S) 5.5 in, , K-55, 20	7,284.8
CASING JOINT(S) 5.5 in, , K-55, 20	7,958.1
FLAPPER VALVE 5.5 in, , K-55, 20	7,958.6
CASING JOINT(S) 5.5 in, , K-55, 20	7,999.7
GUIDE SHOE 5.5 in, , K-55, 20	8,000.5

Well: 354-3G S/T/R:3G/31S/24E
Formerly 54-3G

CASING CEMENT DETAIL
- - -
Sfc Csg. Cmt Vol.: 575cf (T)
Hole Size: 24"
Top Job:
Rtns to Sfc: Yes
TOC: Sfc
- - -

Interm Csg. Cmt Vol.: 690cf (T)
Hole Size: 15"
Top Job:
Rtns to Sfc:
TTOC: ~1760' Thermo Survey
- - -

Prod. Csg. Cmt Vol.: 560cf (T)
Hole Size: 9.75"
Top Job:
Rtns to Sfc: No
TTOC: ~5100'
- - -

Liner Cmt Vol.: 300cf
Hole Size: 8.5"
Top Job:
Rtns to TOL: Yes
TOC: TOL
- - -

Top of Formation:
UBA: 7411'
BLW: N/A

Volume Behind Pipe
1.15 Yield Assumed on
Theoretical Calculations (T)

OCCIDENTAL OF ELK HILLS INC

355-34S

Event: WELL MAINT - RIGLESS
Event End:
Sec. Reason:
End Status:
Well Classification: INJECTION

Ground Level: 852.0ft
Datum: ORIGINAL KB @ 868.00ft (default)
API No.: 0402955908

Wellbore: ORIGINAL HOLE
PBMD: 6,763.0ft
Btm TMD: 7,972.0ft
Spud Date: 5/27/1977 00:00
BH Coord X: 6,148,292.77uss ft
BH Coord Y: 2,288,833.05uss ft

Casing Shoes (ft)	Schematic (5/1/2009)	Openings Top/Btm/Type/Status

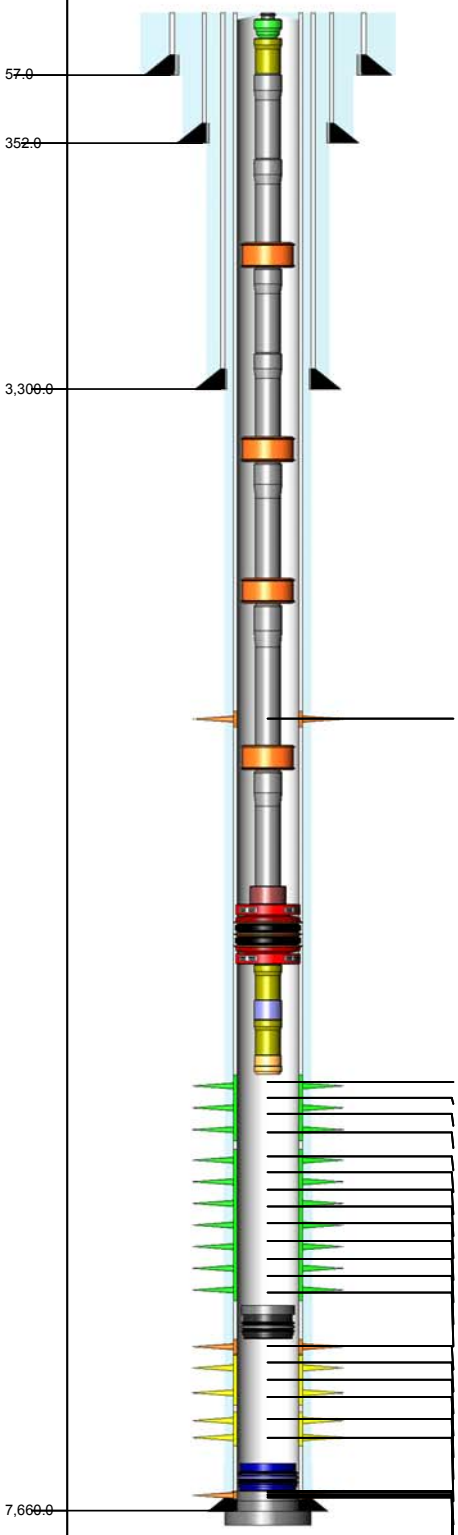

6,168.0ft, 6,169.0ft, PERFORATED, SQUEEZED
6,304.0ft, 6,311.0ft, PERFORATED, OPEN
6,318.0ft, 6,326.0ft, PERFORATED, OPEN
6,336.0ft, 6,372.0ft, PERFORATED, OPEN
6,414.0ft, 6,426.0ft, PERFORATED, OPEN
6,532.0ft, 6,538.0ft, PERFORATED, OPEN
6,544.0ft, 6,554.0ft, PERFORATED, OPEN
6,580.0ft, 6,592.0ft, PERFORATED, OPEN
6,608.0ft, 6,614.0ft, PERFORATED, OPEN
6,628.0ft, 6,636.0ft, PERFORATED, OPEN
6,662.0ft, 6,666.0ft, PERFORATED, OPEN
6,690.0ft, 6,706.0ft, PERFORATED, OPEN
6,718.0ft, 6,726.0ft, PERFORATED, OPEN
6,734.0ft, 6,746.0ft, PERFORATED, OPEN
6,780.0ft, 6,865.0ft, PERFORATED, SQUEEZED
6,878.0ft, 6,900.0ft, PERFORATED, ISOLATED
6,925.0ft, 6,990.0ft, PERFORATED, ISOLATED
7,010.0ft, 7,095.0ft, PERFORATED, ISOLATED
7,010.1ft, 7,095.2ft, PERFORATED, ISOLATED
7,140.0ft, 7,190.0ft, PERFORATED, ISOLATED
7,205.0ft, 7,260.0ft, PERFORATED, ISOLATED
7,300.0ft, 7,310.0ft, PERFORATED, SQUEEZED
7,325.0ft, 7,360.0ft, PERFORATED, SQUEEZED
7,390.0ft, 7,435.0ft, PERFORATED, SQUEEZED
7,450.0ft, 7,465.0ft, PERFORATED, SQUEEZED
7,480.0ft, 7,540.0ft, PERFORATED, SQUEEZED

TUBING STRING — Report Date: 1/31/2007 00:00

Component	Top MD (ft)	Btm MD (ft)
TH-SGL	16.0	16.6
FATNIP	16.6	17.3
PUPJNT	17.3	25.4
TBGJNT	25.4	2,264.0
GLM-V	2,264.0	2,272.8
TBGJNT	2,272.8	4,007.4
GLM-V	4,007.4	4,015.8
TBGJNT	4,015.8	5,308.1
GLM-V	5,308.1	5,317.0
TBGJNT	5,317.0	6,230.3
GLM-V	6,230.3	6,239.2
TBGJNT	6,239.2	6,270.7
ON-OFF	6,270.7	6,272.3
PKR	6,272.3	6,276.2
PUPJNT	6,276.2	6,282.3
NOGO	6,282.3	6,283.7
PUPJNT	6,283.7	6,289.8
WLREG	6,289.8	6,290.3

PLUG BACK — Report Date: 1/25/2007 00:00

Component	Top MD (ft)	Btm MD (ft)
CEMENT	6,763.0	6,773.0
BP-DR	6,773.0	6,774.5

PLUG BACK — Report Date: 1/31/1979 00:00

Component	Top MD (ft)	Btm MD (ft)
CR-RET	7,280.0	7,282.0

PLUG BACK — Report Date: 1/31/1979 00:00

Component	Top MD (ft)	Btm MD (ft)
CEMENT	7,282.0	7,607.0

PLUG BACK — Report Date: 9/24/1977 00:00

Component	Top MD (ft)	Btm MD (ft)
CEMENT	7,607.0	7,660.0

PLUG BACK — Report Date: 9/23/1977 00:00

Component	Top MD (ft)	Btm MD (ft)
CEMENT	7,660.0	8,000.0

CONDUCTOR CASING — Report Date: 5/27/1977 00:00

Item	OD (in)	Grade	Wt. (ppf)	TopMD (ft)	BtmMD (ft)
CASING JOINT(S)	20.000		94.00	16.0	57.0

SURFACE CASING — Report Date: 8/26/1977 00:00

Item	OD (in)	Grade	Wt. (ppf)	TopMD (ft)	BtmMD (ft)
CASING JOINT(S)	13.375	K-55	54.50	16.0	309.1
FLOAT COLLAR	13.375	K-55	54.50	309.1	309.1
CASING JOINT(S)	13.375	K-55	54.50	309.1	351.0
FLOAT SHOE	13.375	K-55	54.50	351.0	352.0

INTERMEDIATE CASING — Report Date: 8/30/1977 00:00

Item	OD (in)	Grade	Wt. (ppf)	TopMD (ft)	BtmMD (ft)
CASING JOINT(S)	9.625	K-55	40.00	16.0	3,255.9
FLOAT COLLAR	9.625	K-55	40.00	3,255.9	3,255.9
CASING JOINT(S)	9.625	K-55	40.00	3,255.9	3,299.0
FLOAT SHOE	9.625	K-55	40.00	3,299.0	3,300.0

PRODUCTION CASING — Report Date: 9/23/1977 00:00

Item	OD (in)	Grade	Wt. (ppf)	TopMD (ft)	BtmMD (ft)
CASING JOINT(S)	7.000	K-55	26.00	16.0	98.6
CASING JOINT(S)	7.000	K-55	23.00	98.6	4,647.8
CASING JOINT(S)	7.000	K-55	26.00	4,647.8	6,191.1
FLAG JOINT	7.000	K-55	26.00	6,191.1	6,208.5
CASING JOINT(S)	7.000	K-55	26.00	6,208.5	7,616.0
FLOAT COLLAR	7.000	K-55	26.00	7,616.0	7,617.4
CASING JOINT(S)	7.000	K-55	26.00	7,617.4	7,657.8
FLOAT SHOE	7.000	K-55	26.00	7,657.8	7,660.0

Well: 355-34S S/T/R: 34S/30S/24E

CASING CEMENT DETAIL
- - -
Sfc Csg. Cmt Vol.: 476 cf
Hole Size: 17-1/2" (13-3/8" Casing)
Top Job: No
Rtns to Sfc: YES
TTOC: NA
- - -

Interm Csg. Cmt Vol.: 1754 cf
Hole Size: 12-1/4" (9-5/8" Casing)
Top Job: NO
Rtns to Sfc: YES
TTOC: NA
- - -

Prod. Csg. Cmt Vol.: 1450 cf
Hole Size: 8-3/4" (7" Casing)
Top Job: NO
Rtns to Sfc: NO
TTOC: Surface
- - -

Liner Cmt Vol.: None
Hole Size:
Top Job:
Rtns to Sfc :
TTOC:
- - -
Top of Formation:
UBA: 6777'
BLW: 7120'

Volume Behind Pipe:
1.3 Yield Assumed
Theoretical Calculations (TTOC)

OCCIDENTAL OF ELK HILLS INC

355-35S

Event: WELL MAINT - RIGLESS
Event End: 12/1/2005 00:00
Sec. Reason:

Ground Level: 693.7ft
Datum: ORIGINAL KB @ 708.72ft (default)
API No.: 0402955740

Wellbore: ORIGINAL HOLE
PBMD: 7,240.0ft
Btm TMD: 7,725.0ft
Spud Date: 6/1/1977 00:00
BH Coord X: 6,153,369.23uss ft
BH Coord Y: 2,288,768.60uss ft

Casing Shoes (ft) | Schematic (1/1/2006) | Openings Top/Btm/Type/Status

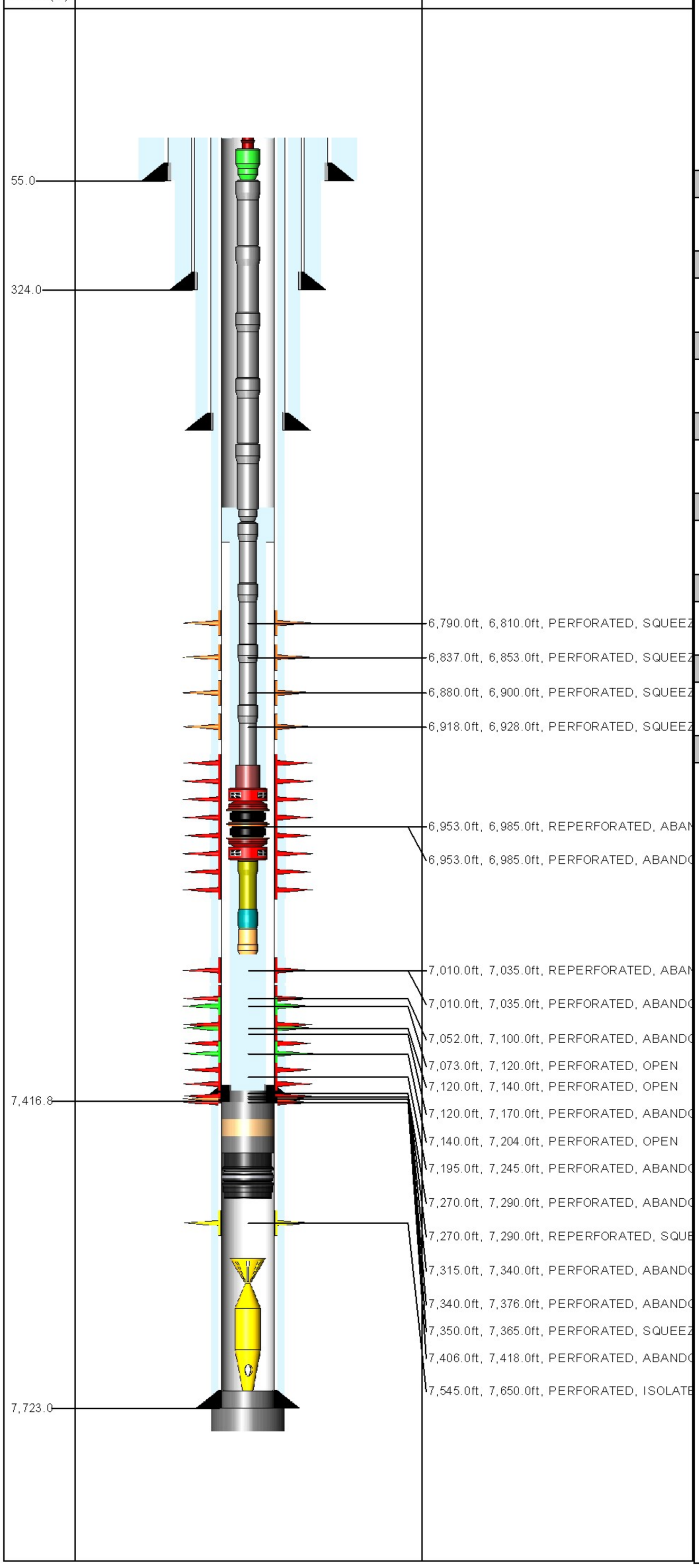

TUBING STRING Report Date: 5/5/2004 00:00

Component	Top MD (ft)	Btm MD (ft)
TH-DBB	15.0	15.5
FATNIP	15.5	16.2
TBGJNT	16.2	6,620.8
XO	6,620.8	6,621.9
TBGJNT	6,621.9	6,971.7
ON-OFF	6,971.7	6,973.1
PKR-S	6,973.1	6,976.8
PUPJNT	6,976.8	6,987.1
PNIP-O	6,987.1	6,988.2
WLREG	6,988.2	6,988.6

PLUG BACK Report Date: 5/1/2004 00:00

Component	Top MD (ft)	Btm MD (ft)
CEMENT	7,240.0	7,417.0

PLUG BACK Report Date: 12/1/1997 00:00

Component	Top MD (ft)	Btm MD (ft)
CEMENT	7,417.0	7,476.0

PLUG BACK Report Date: 10/25/1983 00:00

Component	Top MD (ft)	Btm MD (ft)
FILL	7,476.0	7,479.0

PLUG BACK Report Date: 1/6/1980 00:00

Component	Top MD (ft)	Btm MD (ft)
CEMENT	7,479.0	7,480.0

PLUG BACK Report Date: 1/6/1980 00:00

Component	Top MD (ft)	Btm MD (ft)
BP-DR	7,480.0	7,482.0

PLUG BACK Report Date: 1/5/1980 00:00

Component	Top MD (ft)	Btm MD (ft)
JUNK	7,674.0	7,676.0

PLUG BACK Report Date: 7/21/1977 00:00

Component	Top MD (ft)	Btm MD (ft)
CEMENT	7,676.0	7,723.0

PLUG BACK Report Date: 7/20/1977 00:00

Component	Top MD (ft)	Btm MD (ft)
CEMENT	7,723.0	7,725.0

CONDUCTOR CASING Report Date: 6/1/1977 00:00

Item	OD (in)	Grade	Wt. (ppf)	TopMD (ft)	BtmMD (ft)
CASING JOINT(S)	20.000			15.0	55.0

SURFACE CASING Report Date: 6/27/1977 00:00

Item	OD (in)	Grade	Wt. (ppf)	TopMD (ft)	BtmMD (ft)
CASING JOINT(S)	13.375	H-40	48.00	15.0	282.5
FLOAT COLLAR	13.375	H-40	48.00	282.5	282.6
CASING JOINT(S)	13.375	H-40	48.00	282.6	322.8
FLOAT SHOE	13.375	H-40	48.00	322.8	324.0

INTERMEDIATE CASING Report Date: 7/1/1977 00:00

Item	OD (in)	Grade	Wt. (ppf)	TopMD (ft)	BtmMD (ft)
CASING JOINT(S)	9.625	N-80	40.00	15.0	3,163.4
FLOAT COLLAR	9.625	N-80	40.00	3,163.4	3,163.4
CASING JOINT(S)	9.625	N-80	40.00	3,163.4	3,205.8
FLOAT SHOE	9.625	N-80	40.00	3,205.8	3,207.0

PRODUCTION CASING Report Date: 7/20/1977 00:00

Item	OD (in)	Grade	Wt. (ppf)	TopMD (ft)	BtmMD (ft)
CASING JOINT(S)	7.000	K-55	26.00	15.0	78.8
CASING JOINT(S)	7.000	K-55	23.00	78.8	5,183.6
CASING JOINT(S)	7.000	K-55	26.00	5,183.6	6,377.4
FLAG JOINT	7.000	K-55	26.00	6,377.4	6,392.8
CASING JOINT(S)	7.000	K-55	26.00	6,392.8	7,677.2
FLOAT COLLAR	7.000	K-55	26.00	7,677.2	7,678.6
CASING JOINT(S)	7.000	K-55	26.00	7,678.6	7,720.7
FLOAT SHOE	7.000	K-55	26.00	7,720.7	7,723.0

LINER Report Date: 11/29/1997 00:00

Item	OD (in)	Grade	Wt. (ppf)	TopMD (ft)	BtmMD (ft)
LINER HANGER	6.276	N-80	18.00	6,692.0	6,700.0
CASING JOINT(S)	5.000	N-80	18.00	6,700.0	7,335.5
	5.000	N-80	18.00	7,335.5	7,336.2
FLOAT COLLAR	5.000	N-80	18.00	7,336.2	7,336.8
CASING JOINT(S)	5.000	N-80	18.00	7,336.8	7,416.0
FLOAT SHOE	5.000	N-80	18.00	7,416.0	7,417.0

Well: 355-35S S/T/R: 36/30S/24E

CASING CEMENT DETAIL
- - -
Sfc Csg. Cmt Vol.: 400 cf
Hole Size: 17.5
Top Job: no
Rtns to Sfc: 37 cf
TOC: sfc
- - -

Interm Csg. Cmt Vol.: 1605 cf
Hole Size: 12.25
Top Job: no
Rtns to Sfc: 180 cf
TOC: sfc
- - -

Prod. Csg. Cmt Vol.: 1800 cf
Hole Size: 8.75
Top Job: no
Rtns to Sfc: no
TOC: sfc
- - -

Liner Cmt Vol.: 101 cf
Hole Size: 6.0
Top Job: no
Rtns to Sfc: no
TOC: below top of liner
- - -
Top of Formation:
UBA: 6947'
BLW: 7417'

Volume Behind Pipe:
1.3 Yield Assumed
Theoretical Calculations (TTOC)
JEP

OCCIDENTAL OF ELK HILLS INC

355A-35S

Event: NOI - WORKOVER
Event End:
Sec. Reason:

Ground Level: 705.6ft
Datum: ORIGINAL KB @ 728.60ft (default)
API No.: 0403023350

Wellbore: ORIGINAL HOLE
PBMD: 6,950.0ft
Btm TMD: 7,525.0ft
Spud Date: 10/8/2003 00:00
BH Coord X: 6,153,479.40uss ft
BH Coord Y: 2,287,973.99uss ft

Casing Shoes (ft) | Schematic (3/1/2008) | Openings Top/Btm/Type/Status

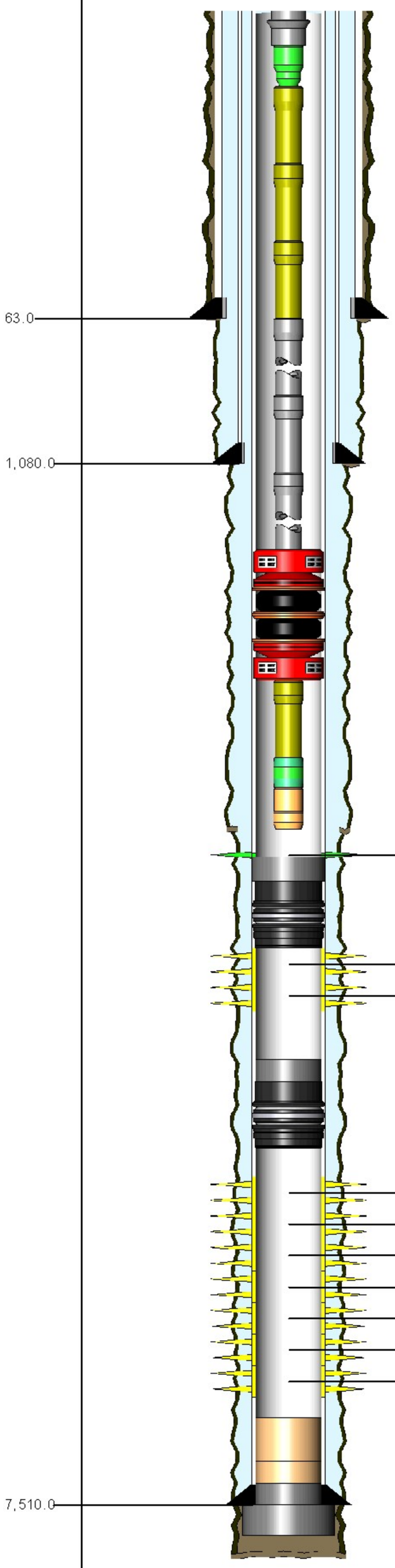

6,722.0ft, 6,742.0ft, PERFORATED, OPEN
6,756.0ft, 6,759.0ft, PERFORATED, ISOLATE
6,759.0ft, 6,780.0ft, PERFORATED, ISOLATE
7,086.0ft, 7,106.0ft, PERFORATED, ISOLATE
7,106.0ft, 7,130.0ft, PERFORATED, ISOLATE
7,130.0ft, 7,150.0ft, PERFORATED, ISOLATE
7,150.0ft, 7,164.0ft, PERFORATED, ISOLATE
7,164.0ft, 7,178.0ft, PERFORATED, ISOLATE
7,178.0ft, 7,198.0ft, PERFORATED, ISOLATE
7,198.0ft, 7,212.0ft, PERFORATED, ISOLATE

PACKER

TUBING STRING Report Date: 1/5/2007 00:00

Component	Top MD (ft)	Btm MD (ft)
TH	23.0	23.7
FATNIP	23.7	24.4
PUPJNT	24.4	26.6
PUPJNT	26.6	28.8
PUPJNT	28.8	36.9
CAS	36.9	6,579.3
PKR	6,579.3	6,583.4
PUPJNT	6,583.4	6,593.3
LNDNIP	6,593.3	6,594.8
WLREG	6,594.8	6,595.3

PLUG BACK Report Date: 2/6/2008 00:00

Component	Top MD (ft)	Btm MD (ft)
CEMENT	6,742.0	6,753.8
BP-DR	6,753.8	6,755.0

PLUG BACK Report Date: 6/24/2006 00:00

Component	Top MD (ft)	Btm MD (ft)
CEMENT	6,950.0	6,960.0

ASSEMBLY (PERMANENT) Report Date: 6/23/2006 00:00

Component	Top MD (ft)	Btm MD (ft)
BP-DR	6,960.0	6,962.0

PLUG BACK Report Date: 11/30/2004 00:00

Component	Top MD (ft)	Btm MD (ft)
FILL	7,380.0	7,383.0

PLUG BACK Report Date: 6/11/2004 00:00

Component	Top MD (ft)	Btm MD (ft)
FILL	7,383.0	7,393.0

PLUG BACK Report Date: 5/27/2004 00:00

Component	Top MD (ft)	Btm MD (ft)
FILL	7,393.0	7,412.0

PLUG BACK Report Date: 4/23/2004 00:00

Component	Top MD (ft)	Btm MD (ft)
CEMENT	7,412.0	7,510.0

PLUG BACK Report Date: 11/6/2003 00:00

Component	Top MD (ft)	Btm MD (ft)
CEMENT	7,510.0	7,520.0

CONDUCTOR CASING Report Date: 9/16/2003 00:00

Item	OD (in)	Grade	Wt. (ppf)	TopMD (ft)	BtmMD (ft)
CASING JOINT(S)	14.000			23.0	63.0

SURFACE CASING Report Date: 10/10/2003 00:00

Item	OD (in)	Grade	Wt. (ppf)	TopMD (ft)	BtmMD (ft)
CASING JOINT(S)	9.625	K-55	36.00	23.0	1,034.4
	9.625	K-55	36.00	1,034.4	1,034.4
CASING JOINT(S)	9.625	K-55	36.00	1,034.4	1,079.0
GUIDE SHOE	9.625	K-55	36.00	1,079.0	1,080.0

PRODUCTION CASING Report Date: 11/6/2003 00:00

Item	OD (in)	Grade	Wt. (ppf)	TopMD (ft)	BtmMD (ft)
CASING JOINT(S)	7.000	N-80	26.00	23.0	6,905.7
FLAG JOINT	7.000	N-80	26.00	6,905.7	6,923.1
CASING JOINT(S)	7.000	N-80	26.00	6,923.1	6,967.7
FLAG JOINT	7.000	N-80	26.00	6,967.7	6,987.7
CASING JOINT(S)	7.000	N-80	26.00	6,987.7	7,421.9
FLOAT COLLAR	7.000	N-80	26.00	7,421.9	7,423.7
CASING JOINT(S)	7.000	N-80	26.00	7,423.7	7,508.8
FLOAT SHOE	7.000	N-80	26.00	7,508.8	7,510.0

Well: 355A-35S S/T/R: 36/30S/24E

CASING CEMENT DETAIL
- - -
Sfc Csg. Cmt Vol.: 674 cf
Hole Size: 14.0
Top Job: no
Rtns to Sfc: 129 cf
TOC: sfc
- - -

Interm Csg. Cmt Vol.:
Hole Size:
Top Job:
Rtns to Sfc:
TOC:
- - -

Prod. Csg. Cmt Vol.: 1156 cf
Hole Size: 14.0
Top Job: no
Rtns to Sfc: 0
TTOC: 6068'
- - -

Liner Cmt Vol.:
Hole Size:
Top Job:
Rtns to Sfc:
TOC:
- - -
Top of Formation:
UBA: 6960'
BLW: 7408'

Volume Behind Pipe:
1.3 Yield Assumed
Theoretical Calculations (TTOC)
JEP

Event: WELL MAINT - RIGLESS
Event End:
Sec. Reason:
End Status:
Well Classification: DEVELOPMENT

OCCIDENTAL OF ELK HILLS INC

355B-35S

Ground Level: 706.0ft
Datum: ORIGINAL KB @ 729.00ft (default)
API No.: 0403023348

Wellbore: ORIGINAL HOLE
PBMD: 7,450.0ft
Btm TMD: 7,510.0ft
Spud Date: 11/13/2003 00:00
BH Coord X: 6,153,208.91uss ft
BH Coord Y: 2,288,664.34uss ft

asing Shoes (ft)	Schematic (9/10/2009)	Openings Top/Btm/Type/Status

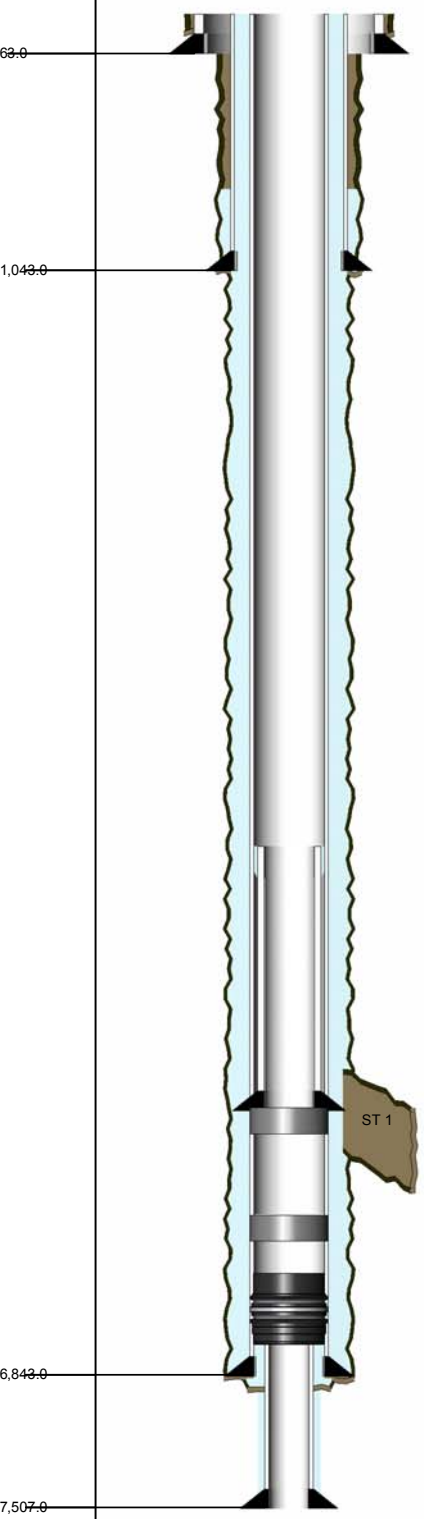

PLUG BACK	Report Date: 11/16/2006 00:00	
Component	Top MD (ft)	Btm MD (ft)
CEMENT	4,194.0	4,247.0

PLUG BACK	Report Date: 11/17/2006 00:00	
Component	Top MD (ft)	Btm MD (ft)
CEMENT	6,570.0	6,670.0

PLUG BACK	Report Date: 11/13/2006 00:00	
Component	Top MD (ft)	Btm MD (ft)
BP-DR	6,680.0	6,685.0

CONDUCTOR CASING Report Date: 10/17/2003 00:00

em	OD (in)	Grade	Wt. (ppf)	TopMD (ft)	BtmMD (ft)
ASING JOINT(S)	26.000			23.0	63.0

SURFACE CASING Report Date: 11/17/2003 00:00

em	OD (in)	Grade	Wt. (ppf)	TopMD (ft)	BtmMD (ft)
ASING JOINT(S)	16.000	K-55	84.00	23.0	1,039.3
ASING SHOE	16.000	K-55	84.00	1,039.3	1,043.0

PRODUCTION CASING Report Date: 12/13/2003 00:00

em	OD (in)	Grade	Wt. (ppf)	TopMD (ft)	BtmMD (ft)
ASING JOINT(S)	10.750	N-80	45.50	23.0	5,874.1
UP JOINT	10.750	N-80	45.50	5,874.1	5,894.2
ASING JOINT(S)	10.750	N-80	45.50	5,894.2	6,753.5
LOAT COLLAR	10.750	N-80	45.50	6,753.5	6,755.3
ASING JOINT(S)	10.750	N-80	45.50	6,755.3	6,841.8
UIDE SHOE	10.750	N-80	45.50	6,841.8	6,843.0

LINER Report Date: 12/23/2003 00:00

em	OD (in)	Grade	Wt. (ppf)	TopMD (ft)	BtmMD (ft)
NER HANGER PACKER	6.625		28.00	6,685.3	6,698.2
ASING HANGER	6.625		28.00	6,698.2	6,703.4
ROSSOVER	6.625		7.70	6,703.4	6,707.8
ASING JOINT(S)	6.625		7.70	6,707.8	7,458.7
ROSSOVER	6.625		7.70	7,458.7	7,461.8
ANDING COLLAR	6.625		28.00	7,461.8	7,462.9
UP JOINT	6.625		28.00	7,462.9	7,483.2
LOAT COLLAR	6.625		28.00	7,483.2	7,484.7
UP JOINT	6.625		28.00	7,484.7	7,505.1
LOAT SHOE	6.625		28.00	7,505.1	7,507.0

PRODUCTION LINER Report Date: 12/4/2006 00:00

em	OD (in)	Grade	Wt. (ppf)	TopMD (ft)	BtmMD (ft)
NER HANGER PACKER	6.625		0.00	4,042.0	4,055.0
NER HANGER	7.625		0.00	4,055.0	4,060.2
	6.625		0.00	4,060.2	4,063.4
ASING JOINT(S)	6.625	K-55	24.00	4,063.4	4,565.8
	6.625	K-55	24.00	4,565.8	4,575.4
ASING JOINT(S)	6.625	K-55	24.00	4,575.4	4,745.3
ASING JOINT(S)	6.625	K-55	24.00	4,745.3	6,510.6
	6.625	K-55	24.00	6,510.6	6,520.4
ASING JOINT(S)	6.625	FAB	7.30	6,520.4	6,863.9
ANDING COLLAR	7.385		0.00	6,863.9	6,865.5
UP JOINT	6.625	K-55	24.00	6,865.5	6,883.6
ASING FLOAT COLLAR	7.738		0.00	6,883.6	6,884.8
UP JOINT	6.625	K-55	24.00	6,884.8	6,902.9
LOAT SHOE	7.738		0.00	6,902.9	6,904.9

Well: 355B-35S S/T/R: 35S/30S/24E

CASING CEMENT DETAIL
- - -

Sfc Csg. Cmt Vol.: 3165 cft
Hole Size: 17.5"
Top Job: No
Rtns to Sfc: Yes
TTOC: Surface
- - -

Interm Csg. Cmt Vol.:
Hole Size:
Top Job:
Rtns to Sfc:
TTOC:
- - -

Prod. Csg. Cmt Vol.: 4905 cft
Hole Size: 14.75"
Top Job: No
Rtns to Sfc: Yes
TTOC: Surface
- - -

Liner Cmt Vol.:
Hole Size:
Top Job:
Rtns to Sfc :
TTOC:
- - -

Top of Formation:
UBA 6921'
BLW 7374'
- - -

Volume Behind Pipe:
1.3 Yield Assumed
Theoretical Calculations (TTOC)

Event: WELL MAINT - RIGLESS
Event End:
Sec. Reason:
End Status:
Well Classification: DEVELOPMENT

OCCIDENTAL OF ELK HILLS INC

355B-35S RD1

Ground Level: 706.0ft
Datum: ORIGINAL KB @ 729.00ft (default)
API No.: 0403023348

Wellbore: ST 1
PBMD: 6,864.0ft
Btm TMD: 6,911.0ft
Spud Date: 11/13/2003 00:00
BH Coord X: 6,153,218.32uss ft
BH Coord Y: 2,288,667.84uss ft

Casing Shoes (ft)	Schematic (9/10/2009)	Openings Top/Btm/Type/Status

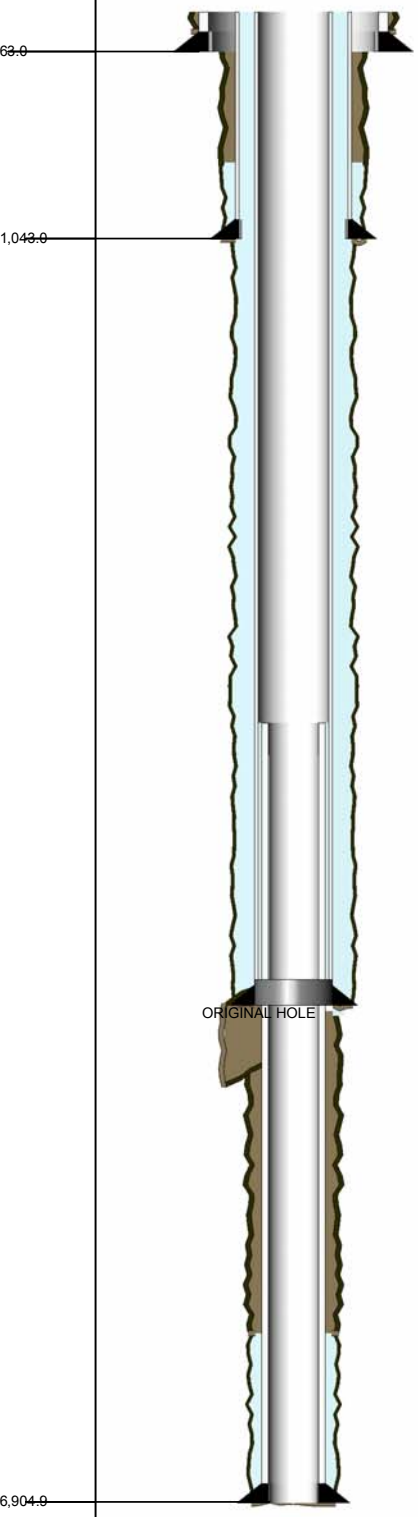

PLUG BACK — Report Date: 11/16/2006 00:00

Component	Top MD (ft)	Btm MD (ft)
CEMENT	4,194.0	4,247.0

CONDUCTOR CASING — Report Date: 10/17/2003 00:00

Item	OD (in)	Grade	Wt. (ppf)	TopMD (ft)	BtmMD (ft)
CASING JOINT(S)	26.000			23.0	63.0

SURFACE CASING — Report Date: 11/17/2003 00:00

Item	OD (in)	Grade	Wt. (ppf)	TopMD (ft)	BtmMD (ft)
CASING JOINT(S)	16.000	K-55	84.00	23.0	1,039.3
CASING SHOE	16.000	K-55	84.00	1,039.3	1,043.0

PRODUCTION CASING — Report Date: 12/13/2003 00:00

Item	OD (in)	Grade	Wt. (ppf)	TopMD (ft)	BtmMD (ft)
CASING JOINT(S)	10.750	N-80	45.50	23.0	5,874.1
PUP JOINT	10.750	N-80	45.50	5,874.1	5,894.2
CASING JOINT(S)	10.750	N-80	45.50	5,894.2	6,753.5
FLOAT COLLAR	10.750	N-80	45.50	6,753.5	6,755.3
CASING JOINT(S)	10.750	N-80	45.50	6,755.3	6,841.8
GUIDE SHOE	10.750	N-80	45.50	6,841.8	6,843.0

PRODUCTION LINER — Report Date: 12/4/2006 00:00

Item	OD (in)	Grade	Wt. (ppf)	TopMD (ft)	BtmMD (ft)
LINER HANGER PACKER	6.625		0.00	4,042.0	4,055.0
LINER HANGER	7.625		0.00	4,055.0	4,060.2
	6.625		0.00	4,060.2	4,063.4
CASING JOINT(S)	6.625	K-55	24.00	4,063.4	4,565.8
	6.625	K-55	24.00	4,565.8	4,575.4
CASING JOINT(S)	6.625	K-55	24.00	4,575.4	4,745.3
CASING JOINT(S)	6.625	K-55	24.00	4,745.3	6,510.6
	6.625	K-55	24.00	6,510.6	6,520.4
CASING JOINT(S)	6.625	FAB	7.30	6,520.4	6,863.9
LANDING COLLAR	7.385		0.00	6,863.9	6,865.5
PUP JOINT	6.625	K-55	24.00	6,865.5	6,883.6
CASING FLOAT COLLAR	7.738		0.00	6,883.6	6,884.8
PUP JOINT	6.625	K-55	24.00	6,884.8	6,902.9
FLOAT SHOE	7.738		0.00	6,902.9	6,904.9

Well: 355B-35S RD1 S/T/R: 35S/30S/24E

CASING CEMENT DETAIL
- - -

Sfc Csg. Cmt Vol.: 3165 cft
Hole Size: 17.5"
Top Job: No
Rtns to Sfc: No
TTOC: Surface
- - -

Interm Csg. Cmt Vol.:
Hole Size:
Top Job:
Rtns to Sfc:
TTOC:
- - -

Prod. Csg. Cmt Vol.: 4905 cft
Hole Size: 14.75"
Top Job: No
Rtns to Sfc: No
TTOC: Surface
- - -

Liner Cmt Vol.: 1445 cft
Hole Size: 9.875"
Top Job: No
Rtns to Sfc : No
TTOC: 4042'
- - -

Top of Formation:
UBA: 6909'
BLW: N/A
- - -

Volume Behind Pipe:
1.3 Yield Assumed
Theoretical Calculations (TTOC)

Event: WELL MAINT - RIGLESS
Event End:
Sec. Reason:
End Status:
Well Classification: DEVELOPMENT

OCCIDENTAL OF ELK HILLS INC

355C-35S

Ground Level: 706.0ft
Datum: ORIGINAL KB @ 729.00ft (default)
API No.: 0403023349

Wellbore: ORIGINAL HOLE
PBMD: 7,475.0ft
Btm TMD: 7,525.0ft
Spud Date: 12/30/2003 00:00
BH Coord X: 6,153,251.80uss ft
BH Coord Y: 2,288,827.03uss ft

Casing Shoes (ft)	Schematic (5/1/2008)	Openings Top/Btm/Type/Status

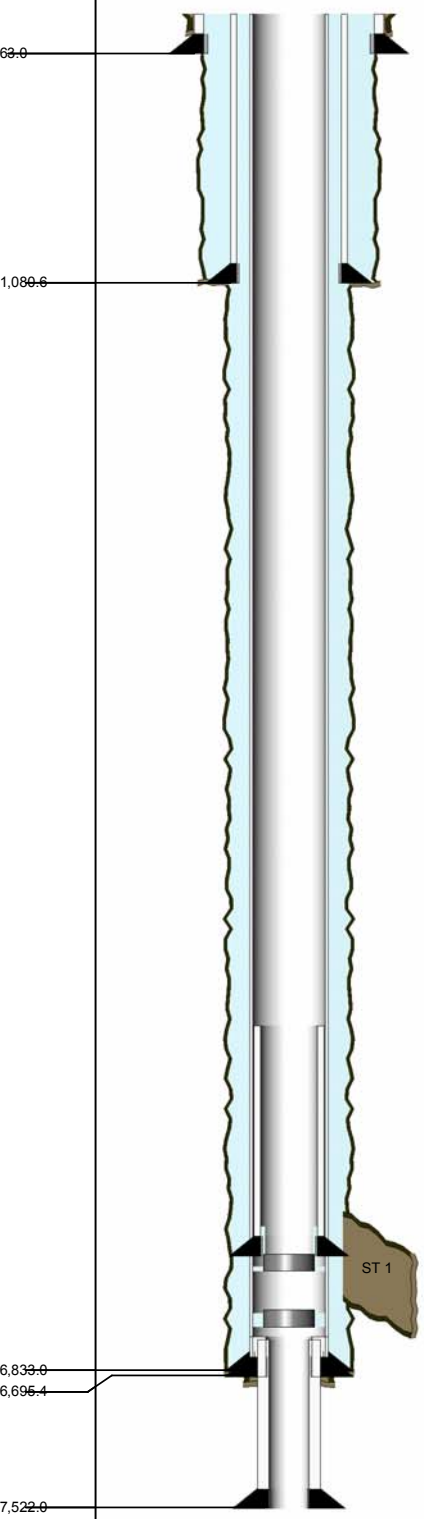

PLUG BACK Report Date: 12/13/2006 00:00

Component	Top MD (ft)	Btm MD (ft)
CEMENT	4,990.0	5,077.0

PLUG BACK Report Date: 12/12/2006 00:00

Component	Top MD (ft)	Btm MD (ft)
CEMENT	6,373.0	6,611.0

CONDUCTOR CASING Report Date: 11/24/2003 00:00

Item	OD (in)	Grade	Wt. (ppf)	TopMD (ft)	BtmMD (ft)
CASING JOINT(S)	26.000			23.0	63.0

SURFACE CASING Report Date: 1/1/2004 00:00

Item	OD (in)	Grade	Wt. (ppf)	TopMD (ft)	BtmMD (ft)
CASING JOINT(S)	16.000	J-55	84.00	23.0	1,076.9
FLOAT SHOE	16.000			1,076.9	1,080.6

PRODUCTION CASING Report Date: 1/17/2004 00:00

Item	OD (in)	Grade	Wt. (ppf)	TopMD (ft)	BtmMD (ft)
CASING JOINT(S)	10.750	N-80	45.50	23.0	6,741.9
FLOAT COLLAR	10.750	N-80	45.50	6,741.9	6,743.8
CASING JOINT(S)	10.750	N-80	45.50	6,743.8	6,831.8
GUIDE SHOE	10.750	N-80	45.50	6,831.8	6,833.0

LINER TIE-BACK Report Date: 4/14/2005 00:00

Item	OD (in)	Grade	Wt. (ppf)	TopMD (ft)	BtmMD (ft)
LINER HANGER PACKER	10.750	LT&C		6,659.0	6,664.6
CASING JOINT(S)	7.000	LT&C	26.00	6,664.6	6,684.6
CROSSOVER	7.000	LT&C	26.00	6,684.6	6,685.3
LINER TIEBACK SEAL ASSEMBLY	7.000	LT&C	26.00	6,685.3	6,695.4

LINER Report Date: 2/3/2004 00:00

Item	OD (in)	Grade	Wt. (ppf)	TopMD (ft)	BtmMD (ft)
LINER HANGER PACKER	8.675	K-55	24.00	6,674.1	6,687.1
CASING HANGER	8.675	K-55	24.00	6,687.1	6,692.5
PLUG HOLDER	6.250	K-55	24.00	6,692.5	6,695.7
CROSSOVER	6.250		7.70	6,695.7	6,697.8
CASING JOINT(S)	6.625		7.70	6,697.8	7,480.1
CROSSOVER	6.625		7.70	7,480.1	7,483.0
LANDING COLLAR	6.625	K-55	24.00	7,483.0	7,484.2
PUP JOINT	6.625	K-55	24.00	7,484.2	7,501.3
FLOAT COLLAR	6.625	K-55	24.00	7,501.3	7,502.8
PUP JOINT	6.625	K-55	24.00	7,502.8	7,519.9
FLOAT SHOE	6.625	K-55	24.00	7,519.9	7,522.0

PRODUCTION LINER Report Date: 12/25/2006 00:00

Item	OD (in)	Grade	Wt. (ppf)	TopMD (ft)	BtmMD (ft)
LINER HANGER PACKER	9.524		0.00	4,848.0	4,861.0
LINER HANGER	9.500		0.00	4,861.0	4,866.2
CROSSOVER	8.541	N-80	0.00	4,866.2	4,869.4
CASING JOINT(S)	6.625	K-55	24.00	4,869.4	6,503.6
CROSSOVER	6.625	K-55	24.00	6,503.6	6,511.1
CASING JOINT(S)	6.625	FAB	7.70	6,511.1	6,854.5
LANDING COLLAR	7.399	N-80	0.00	6,854.5	6,856.1
	6.625	K-55	0.00	6,856.1	6,874.3
CASING FLOAT COLLAR	7.398	N-80	0.00	6,874.3	6,875.4
PUP JOINT	6.625	K-55	0.00	6,875.4	6,893.5
CASING FLOAT SHOE	7.404	N-80	0.00	6,893.5	6,895.5

Well: 335C-35S S/T/R: 35S/30S/24E

CASING CEMENT DETAIL
- - -
Sfc Csg. Cmt Vol.: 1446 cft
Hole Size: 17.5"
Top Job: No
Rtns to Sfc: No
TTOC: Surface
- - -

Interm Csg. Cmt Vol.:
Hole Size:
Top Job:
Rtns to Sfc:
TTOC:
- - -

Prod. Csg. Cmt Vol.: 6050 cft
Hole Size: 14.75"
Top Job: No
Rtns to Sfc: No
TTOC: Surface
- - -

Liner Cmt Vol.: 461cf
Hole Size: 9.625"
Top Job: no
Rtns to Sfc :no
TTOC: TOL
- - -

Top of Formation:
UBA: 6938'
BLW: 7394'
- - -
Volume Behind Pipe:
1.3 Yield Assumed
Theoretical Calculations (TTOC)

Event: WELL MAINT - RIGLESS
Event End:
Sec. Reason:
End Status:
Well Classification: DEVELOPMENT

OCCIDENTAL OF ELK HILLS INC

355C-35S RD1

Ground Level: 706.0ft
Datum: ORIGINAL KB @ 729.00ft (default)
API No.: 0403023349

Wellbore: ST 1
PBMD:
Btm TMD: 6,901.0ft
Spud Date: 12/30/2003 00:00
BH Coord X: 6,153,249.09uss ft
BH Coord Y: 2,288,820.92uss ft

Casing Shoes (ft)	Schematic (5/1/2008)	Openings Top/Btm/Type/Status

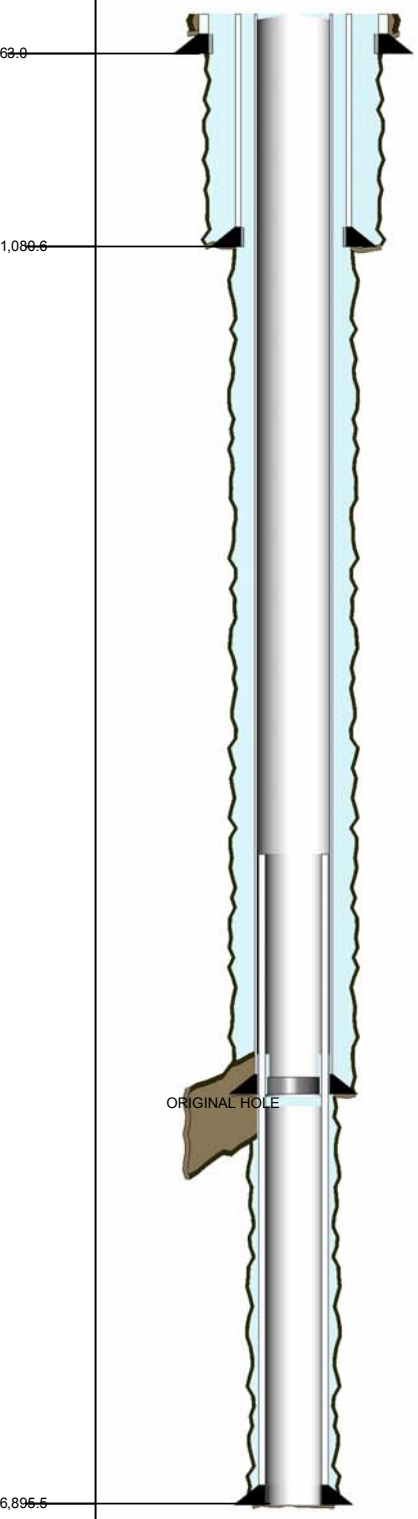

PLUG BACK Report Date: 12/13/2006 00:00

Component	Top MD (ft)	Btm MD (ft)
CEMENT	4,990.0	5,077.0

CONDUCTOR CASING Report Date: 11/24/2003 00:00

Item	OD (in)	Grade	Wt. (ppf)	TopMD (ft)	BtmMD (ft)
CASING JOINT(S)	26.000			23.0	63.0

SURFACE CASING Report Date: 1/1/2004 00:00

Item	OD (in)	Grade	Wt. (ppf)	TopMD (ft)	BtmMD (ft)
CASING JOINT(S)	16.000	J-55	84.00	23.0	1,076.9
FLOAT SHOE	16.000			1,076.9	1,080.6

PRODUCTION CASING Report Date: 1/17/2004 00:00

Item	OD (in)	Grade	Wt. (ppf)	TopMD (ft)	BtmMD (ft)
CASING JOINT(S)	10.750	N-80	45.50	23.0	6,741.9
FLOAT COLLAR	10.750	N-80	45.50	6,741.9	6,743.8
CASING JOINT(S)	10.750	N-80	45.50	6,743.8	6,831.8
GUIDE SHOE	10.750	N-80	45.50	6,831.8	6,833.0

PRODUCTION LINER Report Date: 12/25/2006 00:00

Item	OD (in)	Grade	Wt. (ppf)	TopMD (ft)	BtmMD (ft)
LINER HANGER PACKER	6.524		0.00	4,848.0	4,861.0
LINER HANGER	9.500		0.00	4,861.0	4,866.2
CROSSOVER	8.541	N-80	0.00	4,866.2	4,869.4
CASING JOINT(S)	6.625	K-55	24.00	4,869.4	6,503.6
CROSSOVER	6.625	K-55	24.00	6,503.6	6,511.1
CASING JOINT(S)	6.625	FAB	7.70	6,511.1	6,854.5
LANDING COLLAR	7.399	N-80	0.00	6,854.5	6,856.1
	6.625	K-55	0.00	6,856.1	6,874.3
CASING FLOAT COLLAR	7.398	N-80	0.00	6,874.3	6,875.4
PUP JOINT	6.625	K-55	0.00	6,875.4	6,893.5
CASING FLOAT SHOE	7.404	N-80	0.00	6,893.5	6,895.5

Well: 335C-35S RD1 S/T/R: 35S/30S/24E

CASING CEMENT DETAIL
- - -

Sfc Csg. Cmt Vol.: 1446 cft
Hole Size: 17.5"
Top Job: No
Rtns to Sfc: No
TTOC: Surface
- - -

Interm Csg. Cmt Vol.:
Hole Size:
Top Job:
Rtns to Sfc:
TTOC:
- - -

Prod. Csg. Cmt Vol.: 6050 cft
Hole Size: 14.75"
Top Job: No
Rtns to Sfc: No
TTOC: Surface
- - -

Liner Cmt Vol.: 800 cft
Hole Size: 9.875"
Top Job: No
Rtns to Sfc : No
TTOC: 3979'
- - -

Top of Formation:
UBA: 6896'
BLW: N/A
- - -

Volume Behind Pipe:
1.3 Yield Assumed
Theoretical Calculations (TTOC)

OCCIDENTAL OF ELK HILLS INC

356-34S

Event: WELL MAINT - RIGLESS
Event End:
Sec. Reason:
End Status:
Well Classification: DEVELOPMENT

Ground Level: 854.0ft
Datum: ORIGINAL KB @ 870.00ft (default)
API No.: 0402967367

Wellbore: ORIGINAL HOLE
PBMD: 7,225.0ft
Btm TMD: 7,275.0ft
Spud Date: 8/31/1982 00:00
BH Coord X: 6,148,305.40uss ft
BH Coord Y: 2,288,367.30uss ft

Casing Shoes (ft)	Schematic (8/31/2009)	Openings Top/Btm/Type/Status

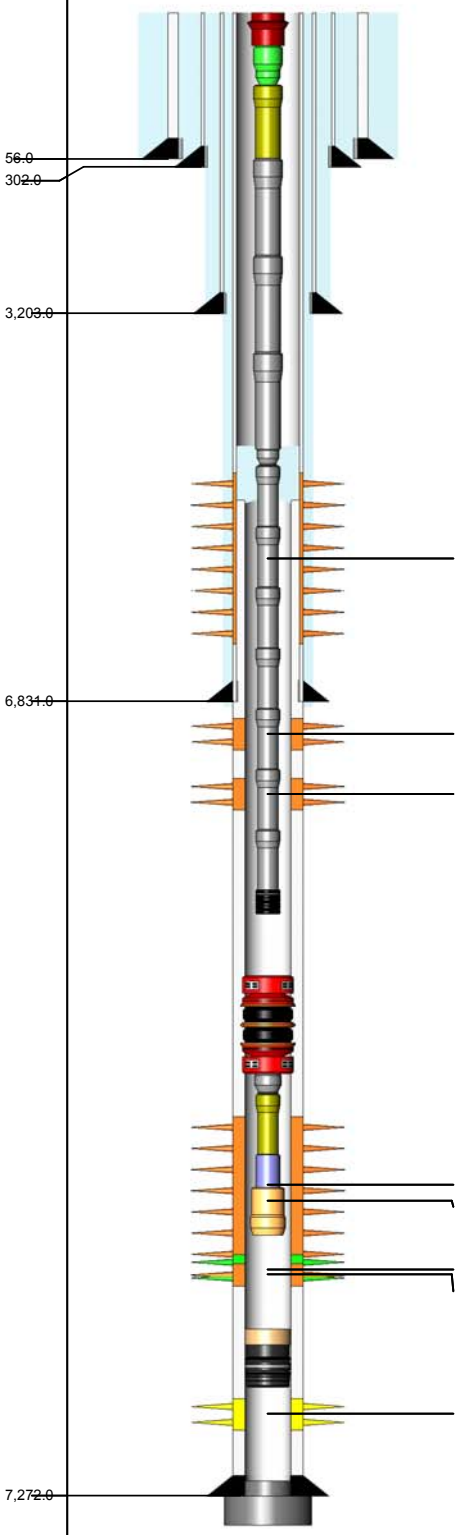

6,746.0ft, 6,820.0ft, PERFORATED, SQUEEZED
6,840.0ft, 6,849.0ft, PERFORATED, SQUEEZED
6,862.0ft, 6,896.0ft, PERFORATED, SQUEEZED
6,921.0ft, 6,970.0ft, PERFORATED, SQUEEZED
6,921.0ft, 7,050.0ft, PERFORATED, SQUEEZED
6,971.0ft, 7,050.0ft, PERFORATED, OPEN
6,995.0ft, 7,050.0ft, PERFORATED, SQUEEZED
7,125.0ft, 7,210.0ft, PERFORATED, ISOLATED

TUBING STRING — Report Date: 8/28/2008 00:00

Component	Top MD (ft)	Btm MD (ft)
TH-DBB	16.0	16.8
FATNIP	16.8	17.7
PUPJNT	17.7	25.8
TBGJNT	25.8	6,738.2
XO	6,738.2	6,739.3
TBGJNT	6,739.3	6,898.1
SA	6,898.1	6,902.7

PACKER ASSEMBLY (PERMANENT) — Report Date: 9/25/2002 00:00

Component	Top MD (ft)	Btm MD (ft)
PKR-S	6,912.0	6,918.4
XO	6,918.4	6,918.7
PUPJNT	6,918.7	6,924.8
NOGO-O	6,924.8	6,926.1
WLREG	6,926.1	6,926.6

PLUG BACK — Report Date: 10/2/2002 00:00

Component	Top MD (ft)	Btm MD (ft)
FILL	7,073.0	7,100.0

PLUG BACK — Report Date: 4/8/1983 00:00

Component	Top MD (ft)	Btm MD (ft)
BP-RET	7,100.0	7,102.0

PLUG BACK — Report Date: 10/4/1982 00:00

Component	Top MD (ft)	Btm MD (ft)
CEMENT	7,225.0	7,272.0

PLUG BACK — Report Date: 9/28/1982 00:00

Component	Top MD (ft)	Btm MD (ft)
CEMENT	7,272.0	7,275.0

CONDUCTOR CASING — Report Date: 8/31/1982 00:00

Item	OD (in)	Grade	Wt. (ppf)	TopMD (ft)	BtmMD (ft)
CASING JOINT(S)	20.000			16.0	56.0

SURFACE CASING — Report Date: 9/3/1982 00:00

Item	OD (in)	Grade	Wt. (ppf)	TopMD (ft)	BtmMD (ft)
CASING JOINT(S)	13.375	H-40	48.00	16.0	302.0

INTERMEDIATE CASING — Report Date: 9/8/1982 00:00

Item	OD (in)	Grade	Wt. (ppf)	TopMD (ft)	BtmMD (ft)
CASING JOINT(S)	9.625	K-55	40.00	16.0	3,201.8
FLOAT SHOE	9.625	K-55	40.00	3,201.8	3,203.0

PRODUCTION CASING — Report Date: 9/24/1982 00:00

Item	OD (in)	Grade	Wt. (ppf)	TopMD (ft)	BtmMD (ft)
CASING JOINT(S)	7.000	K-55	23.00	16.0	4,581.3
CASING JOINT(S)	7.000	K-55	26.00	4,581.3	5,434.9
FLAG JOINT	7.000	K-55	26.00	5,434.9	5,454.6
CASING JOINT(S)	7.000	K-55	26.00	5,454.6	6,787.1
FLOAT COLLAR	7.000	K-55	26.00	6,787.1	6,789.3
CASING JOINT(S)	7.000	K-55	26.00	6,789.3	6,828.8
FLOAT SHOE	7.000	K-55	26.00	6,828.8	6,831.0

LINER — Report Date: 9/28/1982 00:00

Item	OD (in)	Grade	Wt. (ppf)	TopMD (ft)	BtmMD (ft)
LINER HANGER	7.000	K-55	23.00	6,770.0	6,774.8
CASING JOINT(S)	5.500	K-55	23.00	6,774.8	7,227.6
FLOAT COLLAR	5.500	K-55	23.00	7,227.6	7,229.0
CASING JOINT(S)	5.500	K-55	23.00	7,229.0	7,270.4
GUIDE SHOE	5.500	K-55	23.00	7,270.4	7,272.0

Well: 356-34S S/T/R: 34S/30S/24E

CASING CEMENT DETAIL
- - -
Sfc Csg. Cmt Vol.: 290 cf
Hole Size: 17-1/2" (13-3/8" Casing)
Top Job: NO
Rtns to Sfc: YES
TTOC: NA
- - -

Interm Csg. Cmt Vol.: 1654 cf
Hole Size: 12-1/4" (9-5/8" Casing)
Top Job: NO
Rtns to Sfc: YES
TTOC: NA
- - -

Prod. Csg. Cmt Vol.: 1500 cf
Hole Size: 8-3/4" (7" Casing)
Top Job: NO
Rtns to Sfc: NO
TTOC: Surface
- - -

Liner Cmt Vol.: 260 cf
Hole Size: (5-1/2" Liner)
Top Job: NO
Rtns to Sfc: NO
TTOC: Surface (6243')
- - -
Top of Formation:
UBA: 6729'
BLW: 7078'

Volume Behind Pipe:
1.3 Yield Assumed
Theoretical Calculations (TTOC)

Event: WELL MAINT - RIGLESS
Event End:
Sec. Reason:
End Status:
Well Classification: DEVELOPMENT

OCCIDENTAL OF ELK HILLS INC

356-35S

Ground Level: 691.0ft
Datum: ORIGINAL KB @ 714.00ft (default)
API No.: 0403022319

Wellbore: ORIGINAL HOLE
PBMD: 6,985.0ft
Btm TMD: 7,553.0ft
Spud Date: 5/11/2003 00:00
BH Coord X: 6,153,630.06uss ft
BH Coord Y: 2,288,399.70uss ft

Casing Shoes (ft) | Schematic (9/10/2009) | Openings Top/Btm/Type/Status

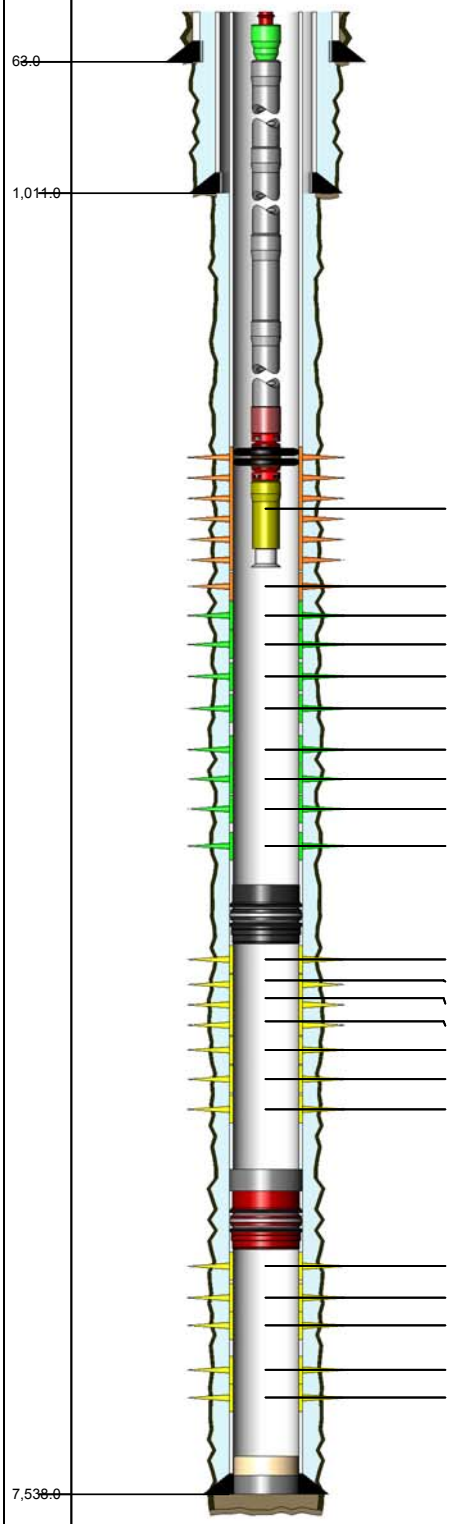

6,705.0ft, 6,727.0ft, PERFORATED, SQUEEZ
6,736.0ft, 6,768.0ft, PERFORATED, SQUEEZ
6,773.0ft, 6,781.0ft, PERFORATED, OPEN
6,785.0ft, 6,797.0ft, PERFORATED, OPEN
6,810.0ft, 6,821.0ft, PERFORATED, OPEN
6,834.0ft, 6,838.0ft, PERFORATED, OPEN
6,876.0ft, 6,892.0ft, PERFORATED, OPEN
6,896.0ft, 6,919.0ft, PERFORATED, OPEN
6,923.0ft, 6,937.0ft, PERFORATED, OPEN
6,950.0ft, 6,958.0ft, PERFORATED, OPEN
6,994.0ft, 7,001.0ft, PERFORATED, ISOLATE
7,004.0ft, 7,038.0ft, PERFORATED, ISOLATE
7,043.0ft, 7,060.0ft, PERFORATED, ISOLATE
7,068.0ft, 7,108.0ft, PERFORATED, ISOLATE
7,110.0ft, 7,135.0ft, PERFORATED, ISOLATE
7,138.0ft, 7,156.0ft, PERFORATED, ISOLATE
7,160.0ft, 7,196.0ft, PERFORATED, ISOLATE
7,250.0ft, 7,293.0ft, PERFORATED, ISOLATE
7,301.0ft, 7,309.0ft, PERFORATED, ISOLATE
7,309.0ft, 7,325.0ft, PERFORATED, ISOLATE
7,354.0ft, 7,385.0ft, PERFORATED, ISOLATE
7,385.0ft, 7,395.0ft, PERFORATED, ISOLATE

TUBING STRING — Report Date: 8/18/2008 00:00

Component	Top MD (ft)	Btm MD (ft)
TH-DBB	23.0	24.0
FATNIP	24.0	24.7
CAS	24.7	6,701.1
ON-OFF	6,701.1	6,702.6
PKR-S	6,702.6	6,710.9
PUPJNT	6,710.9	6,715.0
BELCOL	6,715.0	6,715.4

PLUG BACK — Report Date: 8/15/2008 00:00

Component	Top MD (ft)	Btm MD (ft)
BP-DR	6,985.0	6,987.5

PLUG BACK — Report Date: 6/18/2004 00:00

Component	Top MD (ft)	Btm MD (ft)
CEMENT	7,234.0	7,239.0
BRP	7,239.0	7,242.0

PLUG BACK — Report Date: 7/15/2003 00:00

Component	Top MD (ft)	Btm MD (ft)
SAND	7,431.0	7,434.0

PLUG BACK — Report Date: 6/10/2003 00:00

Component	Top MD (ft)	Btm MD (ft)
CEMENT	7,434.0	7,538.0

CONDUCTOR CASING — Report Date: 4/28/2003 00:00

Item	OD (in)	Grade	Wt. (ppf)	TopMD (ft)	BtmMD (ft)
CASING JOINT(S)	14.000			23.0	63.0

SURFACE CASING — Report Date: 5/12/2003 00:00

Item	OD (in)	Grade	Wt. (ppf)	TopMD (ft)	BtmMD (ft)
CASING JOINT(S)	9.625	K-55	36.00	23.0	967.6
	9.625	K-55		967.6	967.7
CASING JOINT(S)	9.625	K-55	36.00	967.7	1,010.0
GUIDE SHOE	9.625	K-55		1,010.0	1,011.0

PRODUCTION CASING — Report Date: 5/23/2003 00:00

Item	OD (in)	Grade	Wt. (ppf)	TopMD (ft)	BtmMD (ft)
CASING JOINT(S)	7.000	N-80	26.00	23.0	7,036.7
FLAG JOINT	7.000	N-80	26.00	7,036.7	7,055.2
CASING JOINT(S)	7.000	N-80	26.00	7,055.2	7,447.2
FLOAT COLLAR	7.000	N-80	26.00	7,447.2	7,448.8
CASING JOINT(S)	7.000	N-80	26.00	7,448.8	7,536.2
FLOAT SHOE	7.000	N-80	26.00	7,536.2	7,538.0

Well: 356-35S S/T/R: 35S/30S/24E

CASING CEMENT DETAIL
- - -
Sfc Csg. Cmt Vol.: 644 cf
Hole Size: 12.25"
Top Job: no
Rtns to Sfc: no
TTOC: sfc
- - -

Interm Csg. Cmt Vol.:
Hole Size:
Top Job:
Rtns to Sfc:
TOC:
- - -

Prod. Csg. Cmt Vol.: 1293 cf
Hole Size: 8.75"
Top Job: no
Rtns to Sfc: no
TTOC: sfc
- - -

Liner Cmt Vol.:
Hole Size:
Top Job:
Rtns to Sfc:
TTOC:
- - -
Top of Formation:
UBA: 6942'
BLW: 7409'

Volume Behind Pipe:
1.3 Yield Assumed
Theoretical Calculations (TTOC)

OCCIDENTAL OF ELK HILLS INC

357-34S

Event: WELL MAINT - RIGLESS
Event End:
Sec. Reason:

Ground Level: 842.0ft
Datum: ORIGINAL KB @ 857.00ft (default)
API No.: 0402952247

Wellbore: ORIGINAL HOLE
PBMD: 6,918.0ft
Btm TMD: 7,500.0ft
Spud Date: 2/25/1976 00:00
BH Coord X: 6,148,403.98uss ft
BH Coord Y: 2,287,627.79uss ft

Casing Shoes (ft) | Schematic (8/3/2009) | Openings Top/Btm/Type/Status

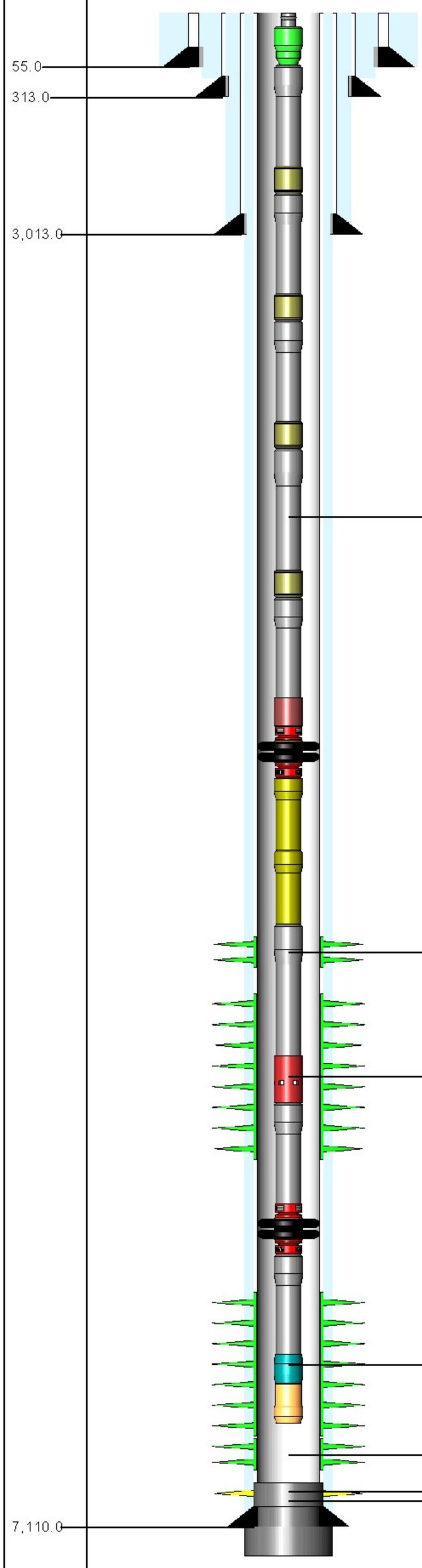

6,100.0ft, 6,101.0ft, WSO PERFS, SQUEE
6,515.0ft, 6,556.0ft, PERFORATED, OPEN
6,576.0ft, 6,646.0ft, PERFORATED, OPEN
6,678.0ft, 6,800.0ft, PERFORATED, OPEN
6,820.0ft, 6,908.0ft, PERFORATED, OPEN
6,928.0ft, 7,008.0ft, PERFORATED, ISOLA
7,020.0ft, 7,040.0ft, PERFORATED, ISOLA

TUBING STRING Report Date: 1/7/2006 00:00

Component	Top MD (ft)	Btm MD (ft)
TH	15.0	16.0
FATNIP	16.0	16.6
TBGJNT	16.6	2,289.1
GLM	2,289.1	2,297.4
TBGJNT	2,297.4	4,040.4
GLM	4,040.4	4,048.9
TBGJNT	4,048.9	5,393.9
GLM	5,393.9	5,402.4
TBGJNT	5,402.4	6,432.8
GLM	6,432.8	6,441.6
TBGJNT	6,441.6	6,472.9
ON-OFF	6,472.9	6,474.7
PKR	6,474.7	6,478.7
PUPJNT	6,478.7	6,488.8
PUPJNT	6,488.8	6,499.1
TBGJNT	6,499.1	6,624.5
SS-C	6,624.5	6,628.4
TBGJNT	6,628.4	6,659.7
PKR	6,659.7	6,666.3
TBGJNT	6,666.3	6,697.3
PRONIP	6,697.3	6,698.4
WLREG	6,698.4	6,698.8

PLUG BACK Report Date: 5/5/2008 00:00

Component	Top MD (ft)	Btm MD (ft)
CEMENT	6,918.0	7,063.0

PLUG BACK Report Date: 7/28/1976 00:00

Component	Top MD (ft)	Btm MD (ft)
CEMENT	7,063.0	7,110.0

PLUG BACK Report Date: 7/27/1976 00:00

Component	Top MD (ft)	Btm MD (ft)
CEMENT	7,110.0	7,500.0

CONDUCTOR CASING Report Date: 2/25/1976 00:00

Item	OD (in)	Grade	Wt. (ppf)	TopMD (ft)	BtmMD (ft)
CASING JOINT(S)	20.000			15.0	55.0

SURFACE CASING Report Date: 7/4/1976 00:00

Item	OD (in)	Grade	Wt. (ppf)	TopMD (ft)	BtmMD (ft)
CASING JOINT(S)	13.375	K-55	54.50	15.0	313.0

INTERMEDIATE CASING Report Date: 7/8/1976 00:00

Item	OD (in)	Grade	Wt. (ppf)	TopMD (ft)	BtmMD (ft)
CASING JOINT(S)	9.625	K-55	40.00	15.0	3,013.0

PRODUCTION CASING Report Date: 7/27/1976 00:00

Item	OD (in)	Grade	Wt. (ppf)	TopMD (ft)	BtmMD (ft)
CASING JOINT(S)	7.000	N-80	26.00	15.0	77.9
CASING JOINT(S)	7.000	K-55	23.00	77.9	4,783.0
CASING JOINT(S)	7.000	N-80	26.00	4,783.0	6,313.5
FLAG JOINT	7.000	N-80	26.00	6,313.5	6,327.8
CASING JOINT(S)	7.000	N-80	26.00	6,327.8	7,063.0
FLOAT COLLAR	7.000	N-80	26.00	7,063.0	7,065.3
CASING JOINT(S)	7.000	N-80	26.00	7,065.3	7,108.2
FLOAT SHOE	7.000	N-80	26.00	7,108.2	7,110.0

Well: 357-34S S/T/R: 34S/30S/24E

CASING CEMENT DETAIL
- - -
Sfc Csg. Cmt Vol.: 425 cf
Hole Size: 17.5"
Top Job: No
Rtns to Sfc: 33 cf
TOC: Sfc
- - -

Interm Csg. Cmt Vol.: 1682 cf
Hole Size: 12.25"
Top Job: No
Rtns to Sfc: 240 cf
TOC: Sfc
- - -

Prod. Csg. Cmt Vol.: 1900 cf
Hole Size: 8.75"
Top Job: No
Rtns to Sfc:
TTOC: Sfc

Liner Cmt Vol.:
Hole Size:
Top Job:
Rtns to Sfc:
TTOC:
- - -
Top of Formation:
UBA: 6676'
BLW: 7070'

Volume Behind Pipe:
1.3 Yield Assumed
Theoretical Calculations (TTOC)

Event: WELL ENHANCEMENT
Event End:
Sec. Reason:
End Status:
Well Classification: DEVELOPMENT

OCCIDENTAL OF ELK HILLS INC

357-35S

Ground Level: 701.0ft
Datum: ORIGINAL KB @ 715.00ft (default)
API No.: 0402953114

Wellbore: ORIGINAL HOLE
PBMD: 6,906.0ft
Btm TMD: 8,000.0ft
Spud Date: 2/25/1976 00:00
BH Coord X: 6,153,644.13uss ft
BH Coord Y: 2,287,703.12uss ft

Casing Shoes (ft) | Schematic (9/14/2009) | Openings Top/Btm/Type/Status

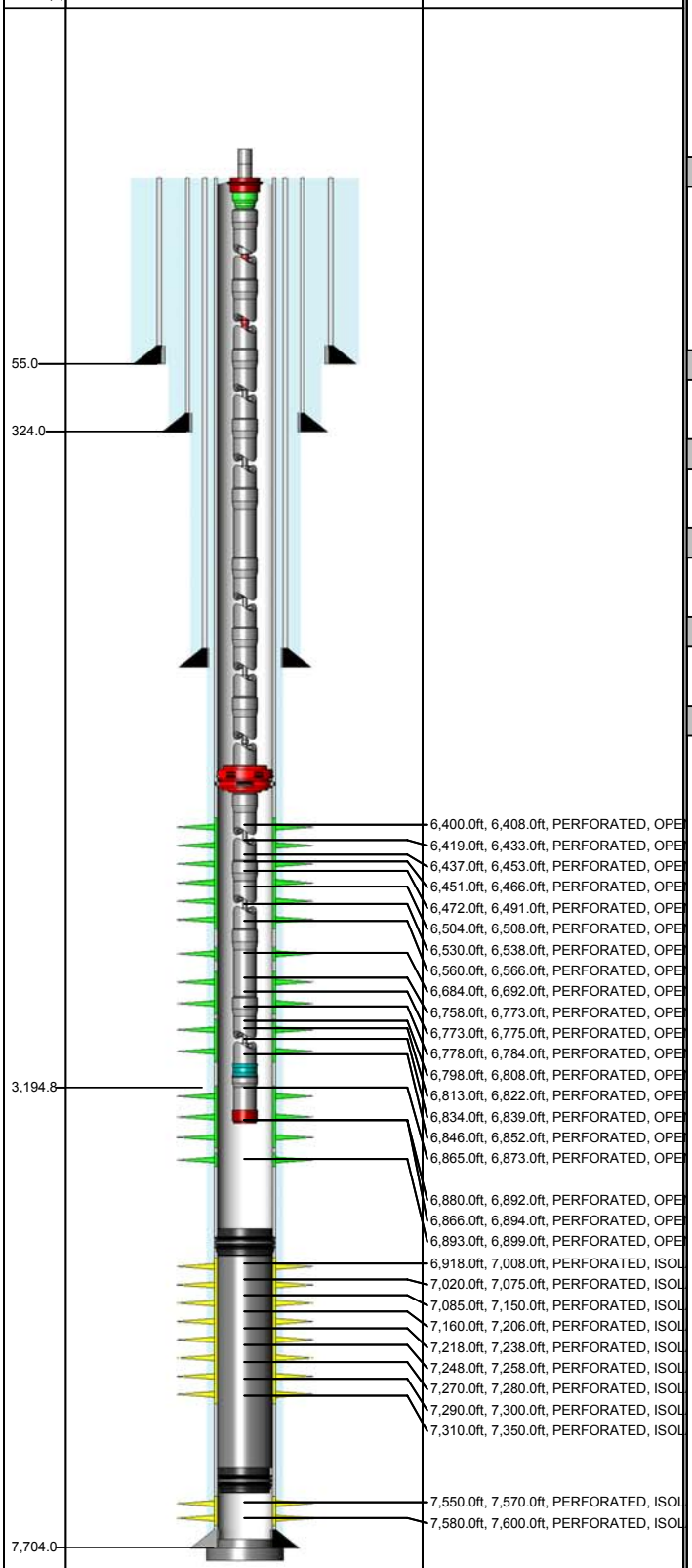

ROD STRING Report Date: 6/7/2009 00:00

Component	Top MD (ft)	Btm MD (ft)
POLROD	0.0	36.0
PNYROD	36.0	46.0
ROD	46.0	2,446.0
R-4PER	2,446.0	3,106.0
ROD	3,106.0	6,106.0
R-4PER	6,106.0	6,856.0
RSTBAR	6,856.0	6,859.0
INSPMP	6,859.0	6,884.0

TUBING STRING Report Date: 6/7/2009 00:00

Component	Top MD (ft)	Btm MD (ft)
TH-DBB	14.0	15.0
FATNIP	15.0	15.8
CAS	15.8	6,188.2
AC	6,188.2	6,190.6
CAS	6,190.6	6,854.9
STNIP	6,854.9	6,855.9
CAS	6,855.9	6,886.8
STCOLL	6,886.8	6,887.2

PLUG BACK Report Date: 11/4/2003 00:00

Component	Top MD (ft)	Btm MD (ft)
BP-DR	6,905.0	6,908.0

PLUG BACK Report Date: 9/26/2000 00:00

Component	Top MD (ft)	Btm MD (ft)
CEMENT	6,905.0	7,525.0

PLUG BACK Report Date: 7/23/1976 00:00

Component	Top MD (ft)	Btm MD (ft)
BP-RET	7,525.0	7,527.0

PLUG BACK Report Date: 7/22/1976 00:00

Component	Top MD (ft)	Btm MD (ft)
CEMENT	7,657.0	7,704.0

PLUG BACK Report Date: 7/21/1976 00:00

Component	Top MD (ft)	Btm MD (ft)
CEMENT	7,704.0	8,000.0

CONDUCTOR CASING Report Date: 2/25/1976 00:00

Item	OD (in)	Grade	Wt. (ppf)	TopMD (ft)	BtmMD (ft)
CASING JOINT(S)	20.000			14.0	55.0

SURFACE CASING Report Date: 6/23/1976 00:00

Item	OD (in)	Grade	Wt. (ppf)	TopMD (ft)	BtmMD (ft)
CASING JOINT(S)	13.375	K-55	54.50	14.0	281.3
FLOAT COLLAR	13.375	K-55	54.50	281.3	281.3
CASING JOINT(S)	13.375	K-55	54.50	281.3	323.0
FLOAT SHOE	13.375	K-55	54.50	323.0	324.0

INTERMEDIATE CASING Report Date: 6/28/1976 00:00

Item	OD (in)	Grade	Wt. (ppf)	TopMD (ft)	BtmMD (ft)
CASING JOINT(S)	9.625	K-55	40.50	14.0	3,105.2
FLOAT COLLAR	9.625	K-55	40.50	3,105.2	3,105.3
CASING JOINT(S)	9.625	K-55	40.50	3,105.3	3,148.6
FLOAT SHOE	9.625	K-55	40.50	3,148.6	3,150.0

PRODUCTION CASING Report Date: 7/21/1976 00:00

Item	OD (in)	Grade	Wt. (ppf)	TopMD (ft)	BtmMD (ft)
CASING JOINT(S)	7.000	K-55	26.00	14.0	96.8
CASING JOINT(S)	7.000	K-55	23.00	96.8	4,810.0
CASING JOINT(S)	7.000	K-55	26.00	4,810.0	6,802.0
FLAG JOINT	7.000	K-55	26.00	6,802.0	6,816.3
CASING JOINT(S)	7.000	K-55	26.00	6,816.3	7,657.0
FLOAT COLLAR	7.000	K-55	26.00	7,657.0	7,659.0
CASING JOINT(S)	7.000	K-55	26.00	7,659.0	7,701.7
FLOAT SHOE	7.000	K-55	26.00	7,701.7	7,704.0

Well: 357-35S S/T/R: 35S/30S/24E

CASING CEMENT DETAIL
- - -
Sfc Csg. Cmt Vol.: 225 cf
Hole Size: 17.5"
Top Job: no
Rtns to Sfc: no
TTOC: sfc
- - -

Interm Csg. Cmt Vol.: 1679 cf
Hole Size: 12.25"
Top Job: no
Rtns to Sfc: 250 cf
TOC: sfc
- - -

Prod. Csg. Cmt Vol.: 2540 cf
Hole Size: 8.75"
Top Job: no
Rtns to Sfc: 250 cf
TTOC: sfc
- - -

Liner Cmt Vol.:
Hole Size:
Top Job:
Rtns to Sfc:
TTOC:
- - -
Top of Formation:
UBA: 6914'
BLW: 7396'

Volume Behind Pipe:
1.3 Yield Assumed
Theoretical Calculations (TTOC)

OCCIDENTAL OF ELK HILLS INC

358-34S

Event: NOI - WORKOVER
Event End:
Sec. Reason:

Ground Level: 896.0ft
KB to Ground: 20.0ft
Datum: ORIGINAL KB @ 916.00ft (default)
API No.: 0402989111

Wellbore: ORIGINAL HOLE
Top TMD: 20.0ft
PBMD: 6,426.0ft
Btm TMD: 7,470.0ft
Spud Date: 6/29/1991 00:00
BH Coord X: 6,148,384.60uss ft BH Coord Y: 2,287,054.90uss

Casing Shoes (ft) | Schematic (2/1/2009) | Openings Top/Btm/Type/Status

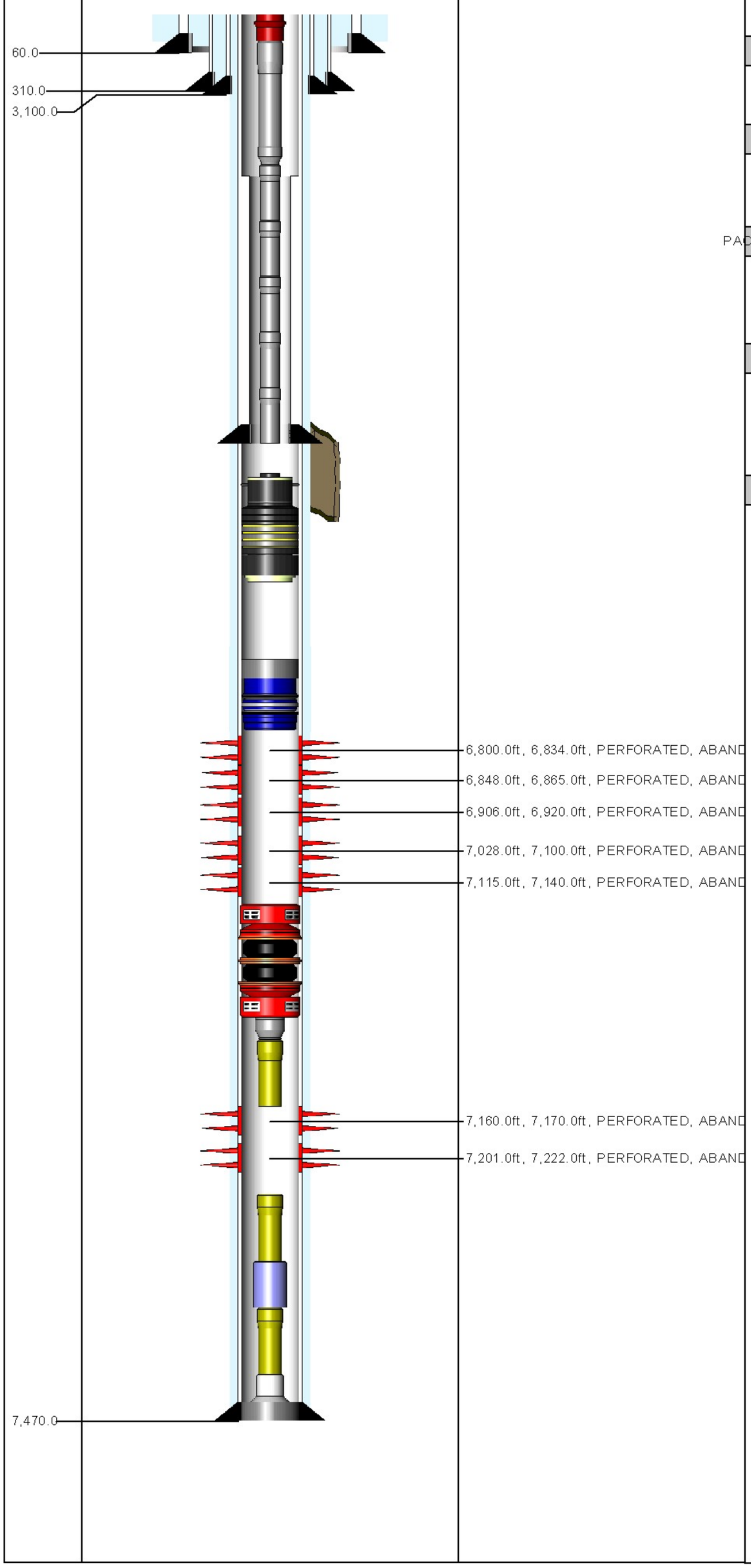

TUBING STRING Report Date: 9/10/2002 00:00

Component	Top MD (ft)	Btm MD (ft)
TH-DBB	20.0	20.6
TBGJNT	20.6	6,069.7
XO	6,069.7	6,070.8
TBGJNT	6,070.8	6,566.4
ON-OFF	6,566.4	6,567.8
PKR-S	6,567.8	6,571.8
PUPJNT	6,571.8	6,575.9
PNIP-O	6,575.9	6,577.3
WLREG	6,577.3	6,577.7

PLUG BACK Report Date: 8/5/2002 00:00

Component	Top MD (ft)	Btm MD (ft)
BP-PRM	6,426.0	6,430.0

PLUG BACK Report Date: 6/12/2002 00:00

Component	Top MD (ft)	Btm MD (ft)
CEMENT	6,616.0	6,716.0
CR-RET	6,716.0	6,720.0

PACKER ASSEMBLY (RETRIEVABLE) Report Date: 6/9/1992 00:00

Component	Top MD (ft)	Btm MD (ft)
PKR-S	7,147.0	7,153.2
XO	7,153.2	7,153.9
PUPJNT	7,153.9	7,159.0

PLUG BACK Report Date: 6/9/1992 00:00

Component	Top MD (ft)	Btm MD (ft)
PUPJNT	7,286.1	7,287.2
NOGO-C	7,287.2	7,288.5
PUPJNT	7,288.5	7,292.6
BELCOL	7,292.6	7,293.0

PLUG BACK Report Date: 11/16/1991 00:00

Component	Top MD (ft)	Btm MD (ft)
CEMENT	7,293.0	7,470.0

CONDUCTOR CASING Report Date: 6/29/1991 00:00

Item Description	Btm MD(ft)
CASING JOINT(S) 20 in,	60.0

SURFACE CASING Report Date: 7/11/1991 00:00

Item Description	Btm MD (ft)
CASING JOINT(S) 13.375 in, , H-40, 48	310.0

INTERMEDIATE CASING Report Date: 7/17/1991 00:00

Item Description	Btm MD (ft)
CASING JOINT(S) 9.625 in, , K-55, 40	3,100.0

PRODUCTION CASING Report Date: 7/29/1991 00:00

Item Description	Btm MD (ft)
CASING JOINT(S) 7 in, , N-80, 26	506.1
CASING JOINT(S) 7 in, , K-55, 26	1,733.3
CASING JOINT(S) 7 in, , K-55, 23	4,831.4
CASING JOINT(S) 7 in, , K-55, 26	6,478.6
PUP JOINT 7 in, , N-80, 26	6,498.8
CASING JOINT(S) 7 in, , N-80, 26	7,385.6
FLOAT COLLAR 7 in, , N-80, 26	7,387.5
CASING JOINT(S) 7 in, , N-80, 26	7,468.0
FLOAT SHOE 7 in, , N-80, 26	7,470.0

LINER Report Date: 8/11/2002 00:00

Item Description	Btm MD (ft)
LINER HANGER PACKER 6.276 in, , 26	6,135.7
LINER HANGER 6.276 in, , 26	6,141.3
PBR 5.25 in, , 26	6,144.3
CROSSOVER 5.25 in, , 26	6,144.7
CASING JOINT(S) 4.5 in, , P-110, 11.6	7,313.9
LANDING COLLAR 4.55 in, , P-110, 11.6	7,315.1
CASING JOINT(S) 4.5 in, , P-110, 11.6	7,392.2
FLOAT SHOE 4.55 in, , P-110, 11.6	7,395.0

Well: 358-34S S/T/R: 34S/30S/24E

CASING CEMENT DETAIL
- - -
Sfc Csg. Cmt Vol.: 128 sx
Hole Size: 17-1/2"
Top Job: No
Rtns to Sfc: 20 bbls
TOC: Sfc
- - -

Interm Csg. Cmt Vol.: 214 sx
Hole Size: 13-1/2"
Top Job: No
Rtns to Sfc: Unkwn
TTOC: Sfc
- - -

Prod. Csg. Cmt Vol.: 53.4 bbls
Hole Size: 9-7/8"
Top Job: No
Rtns to Sfc: Unkwn
TTOC: Sfc
- - -

Liner Cmt Vol.: 26 bbls
Hole Size: 6-1/2"
Top Job: No
Rtns to Sfc: No
TTOC: 6116'
- - -

Top of Formation:
UBA: 6774'
BLW: 7198'
- - -

Volume Behind Pipe
1.15 Yield Assumed on
Theoretical Calculations (BJM)

OCCIDENTAL OF ELK HILLS INC

358-34S

Event: NOI - WORKOVER
Event End:
Sec. Reason:

Ground Level: 896.0ft
Datum: ORIGINAL KB @ 916.00ft (default)
API No.: 0402989111

Wellbore: ST 1
PBMD: 7,302.0ft
Btm TMD: 7,400.0ft
Spud Date: 6/29/1991 00:00
BH Coord X: 6,148,389.85uss ft
BH Coord Y: 2,287,060.58uss ft

Casing Shoes (ft) | Schematic (2/1/2009) | Openings Top/Btm/Type/Status

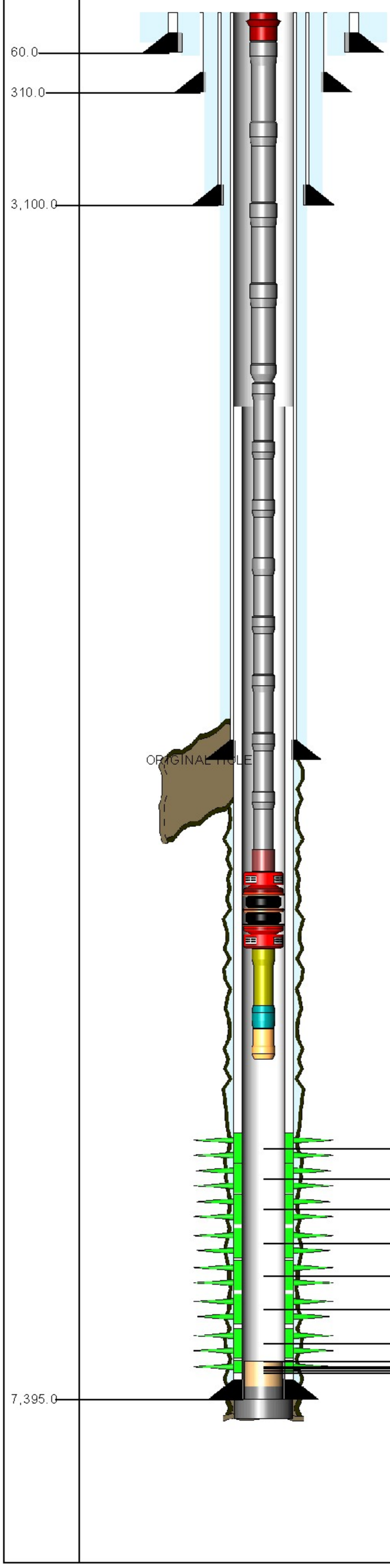

7,057.0ft, 7,058.0ft, PERFORATED, OPEN
7,061.0ft, 7,062.0ft, PERFORATED, OPEN
7,068.0ft, 7,069.0ft, PERFORATED, OPEN
7,094.0ft, 7,124.0ft, PERFORATED, OPEN
7,133.0ft, 7,155.0ft, PERFORATED, OPEN
7,163.0ft, 7,164.0ft, PERFORATED, OPEN
7,172.0ft, 7,173.0ft, PERFORATED, OPEN
7,177.0ft, 7,185.0ft, PERFORATED, OPEN
7,215.0ft, 7,223.0ft, PERFORATED, OPEN
7,232.0ft, 7,238.0ft, PERFORATED, OPEN
7,246.0ft, 7,254.0ft, PERFORATED, OPEN
7,267.0ft, 7,273.0ft, PERFORATED, OPEN

TUBING STRING Report Date: 9/10/2002 00:00

Component	Top MD (ft)	Btm MD (ft)
TH-DBB	20.0	20.6
TBGJNT	20.6	6,069.7
XO	6,069.7	6,070.8
TBGJNT	6,070.8	6,566.4
ON-OFF	6,566.4	6,567.8
PKR-S	6,567.8	6,571.8
PUPJNT	6,571.8	6,575.9
PNIP-O	6,575.9	6,577.3
WLREG	6,577.3	6,577.7

PLUG BACK Report Date: 3/8/2004 00:00

Component	Top MD (ft)	Btm MD (ft)
FILL	7,178.0	7,280.0

PLUG BACK Report Date: 4/10/2003 00:00

Component	Top MD (ft)	Btm MD (ft)
FILL	7,280.0	7,302.0

PLUG BACK Report Date: 9/6/2002 00:00

Component	Top MD (ft)	Btm MD (ft)
CEMENT	7,302.0	7,395.0

PLUG BACK Report Date: 9/6/2002 00:00

Component	Top MD (ft)	Btm MD (ft)
CEMENT	7,395.0	7,400.0

CONDUCTOR CASING Report Date: 6/29/1991 00:00

Item	OD (in)	Grade	Wt. (ppf)	TopMD (ft)	BtmMD (ft)
CASING JOINT(S)	20.000			20.0	60.0

SURFACE CASING Report Date: 7/11/1991 00:00

Item	OD (in)	Grade	Wt. (ppf)	TopMD (ft)	BtmMD (ft)
CASING JOINT(S)	13.375	H-40	48.00	20.0	310.0

INTERMEDIATE CASING Report Date: 7/17/1991 00:00

Item	OD (in)	Grade	Wt. (ppf)	TopMD (ft)	BtmMD (ft)
CASING JOINT(S)	9.625	K-55	40.00	20.0	3,100.0

PRODUCTION CASING Report Date: 7/29/1991 00:00

Item	OD (in)	Grade	Wt. (ppf)	TopMD (ft)	BtmMD (ft)
CASING JOINT(S)	7.000	N-80	26.00	20.0	506.1
CASING JOINT(S)	7.000	K-55	26.00	506.1	1,733.3
CASING JOINT(S)	7.000	K-55	23.00	1,733.3	4,831.4
CASING JOINT(S)	7.000	K-55	26.00	4,831.4	6,478.6
PUP JOINT	7.000	N-80	26.00	6,478.6	6,498.8
CASING JOINT(S)	7.000	N-80	26.00	6,498.8	7,385.6
FLOAT COLLAR	7.000	N-80	26.00	7,385.6	7,387.5
CASING JOINT(S)	7.000	N-80	26.00	7,387.5	7,468.0
FLOAT SHOE	7.000	N-80	26.00	7,468.0	7,470.0

LINER Report Date: 8/11/2002 00:00

Item	OD (in)	Grade	Wt. (ppf)	TopMD (ft)	BtmMD (ft)
LINER HANGER PACKER	6.276		26.00	6,116.2	6,135.7
LINER HANGER	6.276		26.00	6,135.7	6,141.3
PBR	5.250		26.00	6,141.3	6,144.3
CROSSOVER	5.250		26.00	6,144.3	6,144.7
CASING JOINT(S)	4.500	P-110	11.60	6,144.7	7,313.9
LANDING COLLAR	4.550	P-110	11.60	7,313.9	7,315.1
CASING JOINT(S)	4.500	P-110	11.60	7,315.1	7,392.2
FLOAT SHOE	4.550	P-110	11.60	7,392.2	7,395.0

A window was milled in 7" casing,
6410' - 6422'. The old hole was side tracked and a new 6-1/8" hole drilled 6410' - 7400'.
A 4-1/2", 11.6# Liner was hung @ 7395', top @ 6116'. The liner was cemented with 176 CF of cement. The liner was perforated, at intervals, 7057' - 7273' w/ 6 JHPF.

Well: 358-34S-RD1 S/T/R: 34S/30S/24E

CASING CEMENT DETAIL
- - -
Sfc Csg. Cmt Vol.: 300ft3
Bit Size: 17-1/2"
Top Job:
Rtns to Sfc: 110CF
TOC: sfc
- - -

Interm Csg. Cmt Vol.: 1711 ft3
Bit Size: 12-1/4"
Top Job:
Rtns to Sfc: Yes
TOC: Sfc
- - -

Prod. Csg. Cmt Vol.: 2100ft3
Bit Size: 8-3/4"
Top Job:
Rtns to Sfc: not indicated
TTOC: 4670'

Liner Cmt Vol.: 176 ft3
Hole Size: 6-1/8"
Top Job:
Rtns to Sfc:
TTOC: TOL
- - -
Top of Formation:
UBA: 6768'
BLW: 7240'

Volume Behind Pipe:
1.3 Yield Assumed
Theoretical Calculations (TTOC) tb.

OCCIDENTAL OF ELK HILLS INC

358X-34S

Event: WELL MAINT - RIGLESS
Event End:
Sec. Reason:

Ground Level: 905.7ft
Datum: ORIGINAL KB @ 926.70ft (default)
API No.: 0403020339

Wellbore: ORIGINAL HOLE
PBMD: 7,284.0ft
Btm TMD: 7,385.0ft
Spud Date: 5/5/2002 00:00
BH Coord X: 6,148,902.12uss ft
BH Coord Y: 2,287,050.88uss ft

Casing Shoes (ft) | Schematic (8/3/2009) | Openings Top/Btm/Type/Status

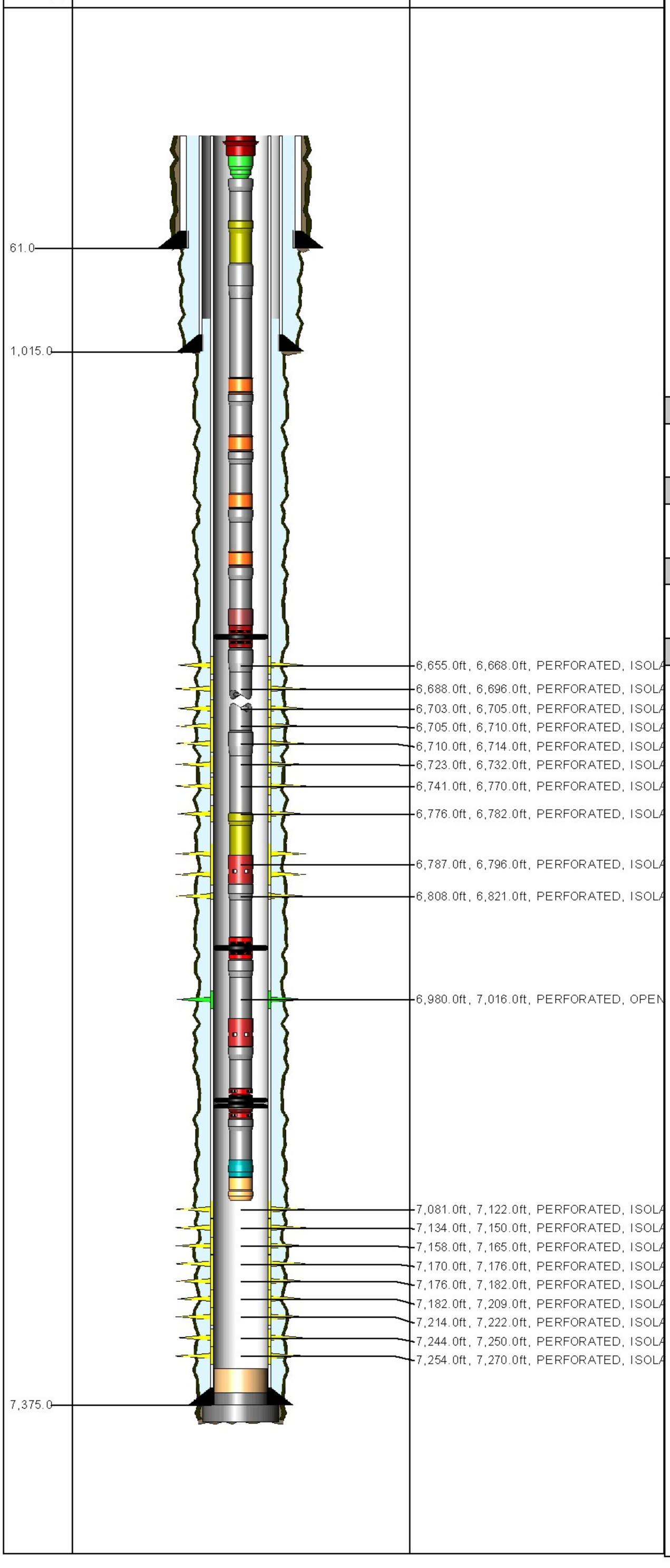

PACKER ASSEMBLY (RETRIEVABLE) Report Date: 6/25/2006 00:00

Component	Top MD (ft)	Btm MD (ft)
TH-DBB	21.0	21.7
FATNIP	21.7	22.3
CAS	22.3	53.2
PUPJNT	53.2	65.3
CAS	65.3	2,399.8
GLM-V	2,399.8	2,408.3
CAS	2,408.3	4,285.8
GLM-V	4,285.8	4,294.3
CAS	4,294.3	5,698.9
GLM-V	5,698.9	5,707.4
CAS	5,707.4	6,575.6
GLM-V	6,575.6	6,584.1
TBGJNT	6,584.1	6,615.4
ON-OFF	6,615.4	6,616.9
HYD	6,616.9	6,623.5
CAS	6,623.5	6,779.8
PUPJNT	6,779.8	6,789.8
SS	6,789.8	6,793.7
CAS	6,793.7	6,854.9
HYD	6,854.9	6,861.8
CAS	6,861.8	7,018.7
SS-O	7,018.7	7,022.5
TBGJNT	7,022.5	7,053.8
PKR	7,053.8	7,057.8
CAS	7,057.8	7,067.8
PNIP-O	7,067.8	7,068.9
WLREG	7,068.9	7,069.3

PLUG BACK Report Date: 1/31/2003 00:00

Component	Top MD (ft)	Btm MD (ft)
FILL	7,276.0	7,280.0

PLUG BACK Report Date: 6/18/2002 00:00

Component	Top MD (ft)	Btm MD (ft)
FILL	7,280.0	7,284.0

PLUG BACK Report Date: 6/8/2002 00:00

Component	Top MD (ft)	Btm MD (ft)
CEMENT	7,284.0	7,375.0

PLUG BACK Report Date: 5/23/2002 00:00

Component	Top MD (ft)	Btm MD (ft)
CEMENT	7,375.0	7,385.0

CONDUCTOR CASING Report Date: 4/24/2002 00:00

Item	OD (in)	Grade	Wt. (ppf)	TopMD (ft)	BtmMD (ft)
CASING JOINT(S)	14.000			21.0	61.0

SURFACE CASING Report Date: 5/6/2002 00:00

Item	OD (in)	Grade	Wt. (ppf)	TopMD (ft)	BtmMD (ft)
CASING JOINT(S)	9.625	K-55	36.00	21.0	971.0
	9.625		36.00	971.0	971.0
CASING JOINT(S)	9.625	K-55	36.00	971.0	1,013.9
GUIDE SHOE	9.625		36.00	1,013.9	1,015.0

PRODUCTION CASING Report Date: 5/22/2002 00:00

Item	OD (in)	Grade	Wt. (ppf)	TopMD (ft)	BtmMD (ft)
CASING JOINT(S)	7.000	P-110	26.00	21.0	260.6
CASING JOINT(S)	7.000	N-80	26.00	260.6	352.2
CASING JOINT(S)	7.000	N-80	29.00	352.2	6,808.5
FLAG JOINT	7.000	N-80	29.00	6,808.5	6,831.8
CASING JOINT(S)	7.000	N-80	29.00	6,831.8	7,284.4
FLOAT COLLAR	7.000		29.00	7,284.4	7,286.1
CASING JOINT(S)	7.000	N-80	29.00	7,286.1	7,373.5
FLOAT SHOE	7.000		29.00	7,373.5	7,375.0

Well: 358X-34S S/T/R: 34S/30S/24E

CASING CEMENT DETAIL
- - -
Sfc Csg. Cmt Vol.: 644 cf
Hole Size: 12.25"
Top Job: No
Rtns to Sfc: 112 cf
TOC: Sfc
- - -

Interm Csg. Cmt Vol.:
Hole Size:
Top Job:
Rtns to Sfc:
TOC:
- - -

Prod. Csg. Cmt Vol.: 1275 cf
Hole Size: 8.75"
Top Job: No
Rtns to Sfc:
TTOC: 1000'
- - -

Liner Cmt Vol.:
Hole Size:
Top Job:
Rtns to Sfc:
TTOC:
- - -
Top of Formation:
UBA: 6807'
BLW: 7251'

Volume Behind Pipe:
1.3 Yield Assumed
Theoretical Calculations (TTOC)

OCCIDENTAL OF ELK HILLS INC

361XH-2G

Event: WELL ENHANCEMENT
Event End:
Sec. Reason:
End Status:
Well Classification: DEVELOPMENT

Ground Level: 871.7ft
Datum: ORIGINAL KB @ 894.70ft (default)
API No.: 0403025976

Wellbore: ORIGINAL HOLE
PBMD: 9,365.0ft
Btm TMD: 9,423.0ft
Spud Date: 10/24/2004 00:00
BH Coord X: 6,156,334.74uss ft
BH Coord Y: 2,288,172.19uss ft

Casing Shoes (ft)	Schematic (3/1/2009)	Openings Top/Btm/Type/Status

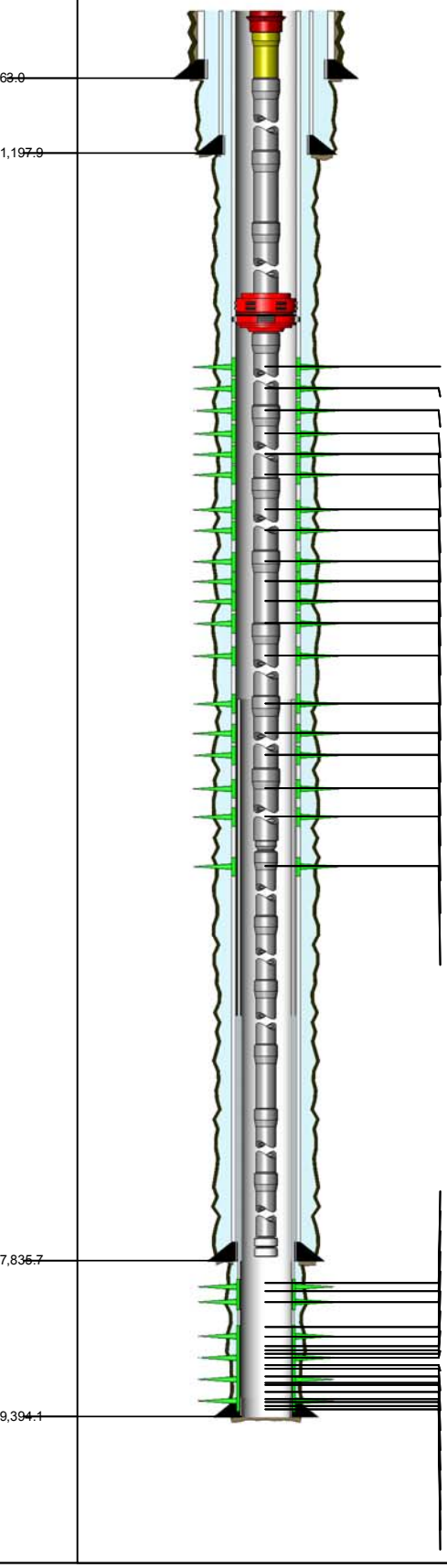

6,494.0ft, 6,501.0ft, PERFORATED, OPEN
6,520.0ft, 6,530.0ft, PERFORATED, OPEN
6,552.0ft, 6,560.0ft, PERFORATED, OPEN
6,588.0ft, 6,592.0ft, PERFORATED, OPEN
6,605.0ft, 6,615.0ft, PERFORATED, OPEN
6,625.0ft, 6,630.0ft, PERFORATED, OPEN
6,735.0ft, 6,740.0ft, PERFORATED, OPEN
6,753.0ft, 6,770.0ft, PERFORATED, OPEN
6,848.0ft, 6,876.0ft, PERFORATED, OPEN
6,882.0ft, 6,894.0ft, PERFORATED, OPEN
6,900.0ft, 6,906.0ft, PERFORATED, OPEN
6,926.0ft, 6,938.0ft, PERFORATED, OPEN
7,016.0ft, 7,026.0ft, PERFORATED, OPEN
7,190.0ft, 7,212.0ft, PERFORATED, OPEN
7,268.0ft, 7,290.0ft, PERFORATED, OPEN
7,304.0ft, 7,326.0ft, PERFORATED, OPEN
7,386.0ft, 7,402.0ft, PERFORATED, OPEN
7,434.0ft, 7,454.0ft, PERFORATED, OPEN
7,496.0ft, 7,518.0ft, PERFORATED, OPEN
8,015.0ft, 8,100.0ft, PERFORATED, OPEN
8,120.0ft, 8,162.0ft, PERFORATED, OPEN
8,180.0ft, 8,320.0ft, PERFORATED, OPEN
8,478.0ft, 8,520.0ft, PERFORATED, OPEN
8,575.0ft, 8,616.0ft, PERFORATED, OPEN
8,685.0ft, 8,698.0ft, PERFORATED, OPEN
8,724.0ft, 8,740.0ft, PERFORATED, OPEN
8,740.0ft, 8,792.0ft, PERFORATED, OPEN
8,800.0ft, 8,812.0ft, PERFORATED, OPEN
8,872.0ft, 8,890.0ft, PERFORATED, OPEN
8,890.0ft, 8,940.0ft, PERFORATED, OPEN
8,940.0ft, 9,045.0ft, PERFORATED, OPEN
9,045.0ft, 9,070.0ft, PERFORATED, OPEN
9,070.0ft, 9,085.0ft, PERFORATED, OPEN
9,136.0ft, 9,159.0ft, PERFORATED, OPEN
9,214.0ft, 9,227.0ft, PERFORATED, OPEN
9,242.0ft, 9,258.0ft, PERFORATED, OPEN
9,283.0ft, 9,292.0ft, PERFORATED, OPEN
9,303.0ft, 9,340.0ft, PERFORATED, OPEN

ROD STRING — Report Date: 2/20/2009 00:00

Component	Top MD (ft)	Btm MD (ft)
POLRDL	0.0	36.0
PNYROD	36.0	44.0
ROD	44.0	74.0
COROD	74.0	1,233.0
COROD	1,233.0	2,943.0
COROD	2,943.0	7,713.0
RSTBAR	7,713.0	7,717.0
ON-OFF	7,717.0	7,718.0
RSTBAR	7,718.0	7,722.0
INSPMP	7,722.0	7,746.0

TUBING STRING — Report Date: 2/13/2009 00:00

Component	Top MD (ft)	Btm MD (ft)
TH-DBB	23.0	23.0
PUPJNT	23.0	33.2
CAS	33.2	6,314.6
AC	6,314.6	6,317.0
CAS	6,317.0	7,481.9
XO	7,481.9	7,483.0
CAS	7,483.0	7,771.9
PMPSH	7,771.9	7,772.5
PMPJKT	7,772.5	7,788.2

CONDUCTOR CASING — Report Date: 10/11/2004 00:00

Item	OD (in)	Grade	Wt. (ppf)	TopMD (ft)	BtmMD (ft)
CASING JOINT(S)	14.000			23.0	63.0

SURFACE CASING — Report Date: 10/25/2004 00:00

Item	OD (in)	Grade	Wt. (ppf)	TopMD (ft)	BtmMD (ft)
CASING JOINT(S)	9.625	K-55	36.00	23.0	1,159.9
	9.625			1,159.9	1,159.9
CASING JOINT(S)	9.625	K-55	36.00	1,159.9	1,196.8
GUIDE SHOE	9.625			1,196.8	1,198.0

INTERMEDIATE CASING — Report Date: 11/4/2004 00:00

Item	OD (in)	Grade	Wt. (ppf)	TopMD (ft)	BtmMD (ft)
LINER HANGER	7.000	N-80	26.00	23.0	24.0
PUP JOINT	7.000	N-80	26.00	24.0	27.4
PUP JOINT	7.000	N-80	26.00	27.4	48.9
CASING JOINT(S)	7.000	N-80	26.00	48.9	7,461.0
CROSSOVER	7.000	N-80	26.00	7,461.0	7,496.0
CASING JOINT(S)	7.000	N-80	26.00	7,496.0	7,747.1
FLOAT COLLAR	7.000	N-80	26.00	7,747.1	7,748.7
CASING JOINT(S)	7.000	N-80	26.00	7,748.7	7,834.0
FLOAT SHOE	7.000	N-80	26.00	7,834.0	7,835.7

LINER — Report Date: 11/10/2004 00:00

Item	OD (in)	Grade	Wt. (ppf)	TopMD (ft)	BtmMD (ft)
TIE BACK RECEPTACLE	5.750	N-80		7,648.2	7,654.2
	6.000			7,654.2	7,655.6
PACKER (SINGLE)	6.000			7,655.6	7,658.2
SEALBORE EXTENSION	5.250	N-80		7,658.2	7,663.1
TIE BACK RECEPTACLE	5.750			7,663.1	7,669.1
	5.705			7,669.1	7,676.2
LINER HANGER	6.000			7,676.2	7,683.3
CASING JOINT(S)	5.000	N-80	15.00	7,683.3	9,339.5
LANDING COLLAR	5.000	N-80	15.00	9,339.5	9,341.8
FLOAT COLLAR	5.000	N-80	15.00	9,341.8	9,344.2
CASING JOINT(S)	5.000	N-80	15.00	9,344.2	9,391.2
FLOAT SHOE	5.000	N-80	15.00	9,391.2	9,394.1

Well: 361XH-2G S/T/R: 2G/31S/24E

CASING CEMENT DETAIL
- - -
Sfc Csg. Cmt Vol.: 758 cf
Hole Size: 12.25"
Top Job: No
Rtns to Sfc: 20 bbl
TOC: Sfc
- - -

Interm Csg. Cmt Vol.:
Hole Size:
Top Job:
Rtns to Sfc:
TOC:
- - -

Prod. Csg. Cmt Vol.: 2065 cf
Hole Size: 8.75"
Top Job: No
Rtns to Sfc:
TTOC: Sfc
- - -

Liner Cmt Vol.: 252 cf
Hole Size: 6.125"
Top Job: No
Rtns to Sfc:
TTOC: TOL
- - -
Top of Formation:
UBA: N/A
BLW: N/A

Volume Behind Pipe:
1.3 Yield Assumed
Theoretical Calculations (TTOC)

OCCIDENTAL OF ELK HILLS INC

362-34S

Event: WELL MAINT - RIGLESS
Event End: 7/3/2008 00:00
Sec. Reason:
End Status: FINISHED - SUCCESS
Well Classification: INJECTION

Ground Level: 801.0ft
Datum: ORIGINAL KB @ 815.00ft (HES CTU)(default)
API No.: 0402967595

Wellbore: ORIGINAL HOLE
PBMD: 7,995.0ft
Btm TMD: 8,059.0ft
Spud Date: 10/1/1982 00:00
BH Coord X: 6,148,942.19uss ft
BH Coord Y: 2,290,516.29uss ft

Casing Shoes (ft)	Schematic (8/1/2008)	Openings Top/Btm/Type/Status
53.0		
306.0		
3,302.0		
		7,561.0ft, 7,575.0ft, PERFORATED, OPEN
		7,600.0ft, 7,625.0ft, PERFORATED, OPEN
		7,650.0ft, 7,680.0ft, PERFORATED, OPEN
		7,706.0ft, 7,745.0ft, PERFORATED, OPEN
		7,770.0ft, 7,800.0ft, PERFORATED, OPEN
		7,825.0ft, 7,864.0ft, PERFORATED, OPEN
		7,894.0ft, 7,920.0ft, PERFORATED, OPEN
8,049.0		

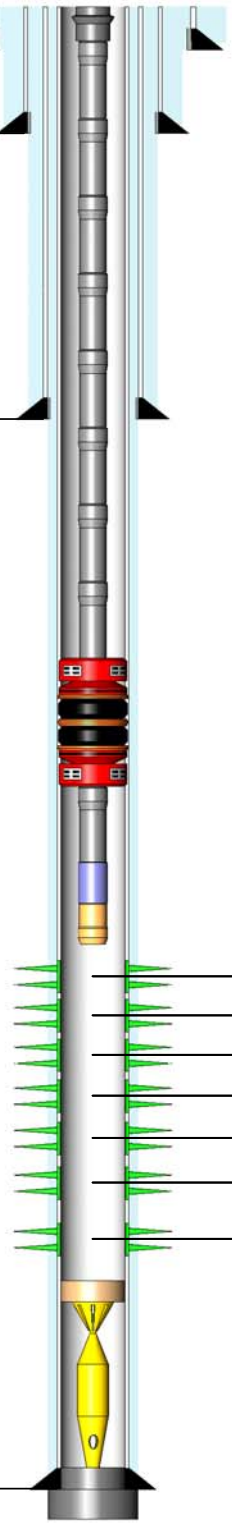

TUBING STRING — Report Date: 11/13/1986 00:00

Component	Top MD (ft)	Btm MD (ft)
TH-SGL	14.0	14.6
TBGJNT	14.6	7,480.6
PKR-S	7,480.6	7,486.9
TBGJNT	7,486.9	7,495.0
NOGO-O	7,495.0	7,496.1
WLREG	7,496.1	7,496.6

PLUG BACK — Report Date: 9/26/2003 00:00

Component	Top MD (ft)	Btm MD (ft)
FILL	7,925.0	7,995.0

PLUG BACK — Report Date: 11/12/1986 00:00

Component	Top MD (ft)	Btm MD (ft)
JUNK	7,995.0	8,019.0

PLUG BACK — Report Date: 12/5/1982 00:00

Component	Top MD (ft)	Btm MD (ft)
CEMENT	8,019.0	8,049.0

PLUG BACK — Report Date: 11/18/1982 00:00

Component	Top MD (ft)	Btm MD (ft)
CEMENT	8,049.0	8,059.0

CONDUCTOR CASING — Report Date: 10/21/1982 00:00

Item	OD (in)	Grade	Wt. (ppf)	TopMD (ft)	BtmMD (ft)
CASING JOINT(S)	20.000			14.0	53.0

SURFACE CASING — Report Date: 10/26/1982 00:00

Item	OD (in)	Grade	Wt. (ppf)	TopMD (ft)	BtmMD (ft)
CASING JOINT(S)	13.375	H-40	48.00	14.0	264.6
FLOAT COLLAR	13.375	H-40	48.00	264.6	264.6
CASING JOINT(S)	13.375	H-40	48.00	264.6	304.9
FLOAT SHOE	13.375	H-40	48.00	304.9	306.0

INTERMEDIATE CASING — Report Date: 10/31/1982 00:00

Item	OD (in)	Grade	Wt. (ppf)	TopMD (ft)	BtmMD (ft)
CASING JOINT(S)	9.625	K-55	40.00	14.0	3,258.1
FLOAT COLLAR	9.625	K-55	40.00	3,258.1	3,258.1
CASING JOINT(S)	9.625	K-55	40.00	3,258.1	3,300.9
FLOAT SHOE	9.625	K-55	40.00	3,300.9	3,302.0

PRODUCTION CASING — Report Date: 11/18/1982 00:00

Item	OD (in)	Grade	Wt. (ppf)	TopMD (ft)	BtmMD (ft)
CASING JOINT(S)	7.000	N-80	26.00	14.0	4,982.6
CASING JOINT(S)	7.000	K-55	23.00	4,982.6	6,928.7
FLAG JOINT	7.000	K-55	26.00	6,928.7	6,952.9
CASING JOINT(S)	7.000	K-55	26.00	6,952.9	8,007.5
FLOAT COLLAR	7.000	N-80	26.00	8,007.5	8,009.4
CASING JOINT(S)	7.000	N-80	26.00	8,009.4	8,046.6
FLOAT SHOE	7.000	N-80	26.00	8,046.6	8,049.0

Well: 362-34S S/T/R: 34S/30S/24E

CASING CEMENT DETAIL
- - -
Sfc Csg. Cmt Vol.: 500 cf
Hole Size: 17-1/2" (13-3/8" Casing)
Top Job: NO
Rtns to Sfc: YES
TTOC: NA
- - -

Interm Csg. Cmt Vol.: 1640 cf
Hole Size: 12-1/4" (9-5/8" Casing)
Top Job: NO
Rtns to Sfc: YES
TTOC: NA
- - -

Prod. Csg. Cmt Vol.: 1800 cf
Hole Size: 8-3/4" (7" Casing)
Top Job: NO
Rtns to Sfc: YES
TTOC: NA
- - -

Liner Cmt Vol.:
Hole Size:
Top Job:
Rtns to Sfc:
TTOC:
- - -
Top of Formation:
UBA: 7550'
BLW: 7971'

Volume Behind Pipe:
1.3 Yield Assumed
Theoretical Calculations (TTOC)

OCCIDENTAL OF ELK HILLS INC

3-62-35S

Event: WELL MAINT - RIGLESS
Event End: 5/31/2006 00:00
Sec. Reason:

Ground Level: 653.0ft
Datum: ORIGINAL KB @ 673.00ft (default)
API No.: 0402960202

Wellbore: ORIGINAL HOLE
PBMD: 3,350.0ft
Btm TMD: 8,179.0ft
Spud Date: 10/9/1979 00:00
BH Coord X: 6,154,054.90uss ft
BH Coord Y: 2,290,158.20uss ft

Casing Shoes (ft)	Schematic (6/1/2006)	Openings Top/Btm/Type/Status

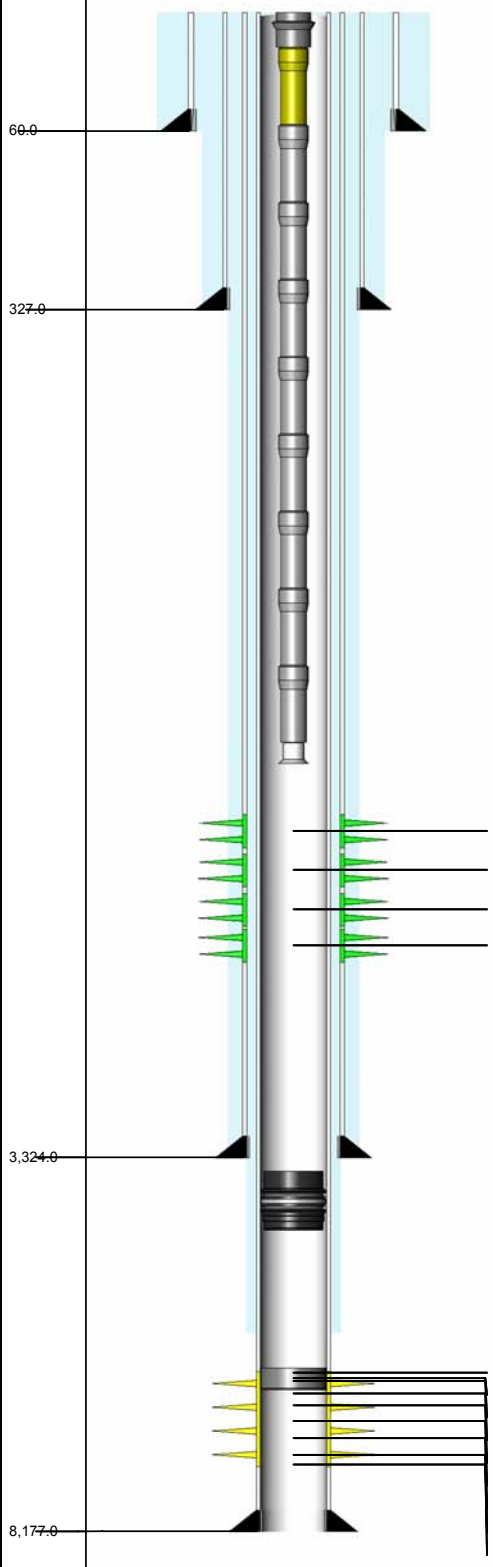

2,882.0ft, 2,976.0ft, PERFORATED, OPEN
3,000.0ft, 3,020.0ft, PERFORATED, OPEN
3,044.0ft, 3,064.0ft, PERFORATED, OPEN
3,074.0ft, 3,094.0ft, PERFORATED, OPEN
7,005.0ft, 7,090.0ft, PERFORATED, ISOLATED
7,153.0ft, 7,220.0ft, PERFORATED, ISOLATED
7,245.0ft, 7,280.0ft, PERFORATED, ISOLATED
7,484.0ft, 7,510.0ft, PERFORATED, ISOLATED
7,525.0ft, 7,585.0ft, PERFORATED, ISOLATED
7,610.0ft, 7,655.0ft, PERFORATED, ISOLATED
7,680.0ft, 7,755.0ft, PERFORATED, ISOLATED
7,780.0ft, 7,820.0ft, PERFORATED, ISOLATED
7,840.0ft, 7,855.0ft, PERFORATED, ISOLATED

TUBING STRING Report Date: 5/1/2006 00:00

Component	Top MD (ft)	Btm MD (ft)
TH-SGL	20.0	20.7
PUPJNT	20.7	24.7
TBGJNT	24.7	2,610.2
BELCOL	2,610.2	2,610.6

PLUG BACK Report Date: 6/3/1989 00:00

Component	Top MD (ft)	Btm MD (ft)
BP-DR	3,350.0	3,352.0

PLUG BACK Report Date: 6/2/1989 00:00

Component	Top MD (ft)	Btm MD (ft)
CEMENT	6,913.0	7,476.0

PRODUCTION CASING Report Date: 5/10/1982 00:00

Component	Top MD (ft)	Btm MD (ft)
BP-DR	7,426.0	7,449.0

CONDUCTOR CASING Report Date: 10/9/1979 00:00

em	OD (in)	Grade	Wt. (ppf)	TopMD (ft)	BtmMD (ft)
ASING JOINT(S)	20.000			20.0	60.0

SURFACE CASING Report Date: 10/17/1979 00:00

em	OD (in)	Grade	Wt. (ppf)	TopMD (ft)	BtmMD (ft)
ASING JOINT(S)	13.375	H-40	48.00	20.0	285.0
	13.375	H-40	48.00	285.0	285.5
ASING JOINT(S)	13.375	H-40	48.00	285.5	326.5
UIDE SHOE	13.375	H-40	48.00	326.5	327.0

INTERMEDIATE CASING Report Date: 10/22/1979 00:00

em	OD (in)	Grade	Wt. (ppf)	TopMD (ft)	BtmMD (ft)
ASING JOINT(S)	9.625	K-55	40.00	20.0	3,279.0
	9.625	K-55	40.00	3,279.0	3,279.5
ASING JOINT(S)	9.625	K-55	40.00	3,279.5	3,323.5
UIDE SHOE	9.625	K-55	40.00	3,323.5	3,324.0

PRODUCTION CASING Report Date: 11/25/1979 00:00

em	OD (in)	Grade	Wt. (ppf)	TopMD (ft)	BtmMD (ft)
ASING JOINT(S)	7.000	N-80	26.00	20.0	3,181.0
ASING JOINT(S)	7.000	K-55	23.00	3,181.0	8,123.0
LOAT COLLAR	7.000	K-55	23.00	8,123.0	8,123.5
ASING JOINT(S)	7.000	N-80	26.00	8,123.5	8,176.5
UIDE SHOE	7.000	N-80	26.00	8,176.5	8,177.0

Well: 3-62-35S S/T/R: 35S/30S/24E

CASING CEMENT DETAIL
- - -
Sfc Csg. Cmt Vol.: 325 cft
Hole Size: 17.5"
Top Job: no
Rtns to Sfc: 5 cf
TTOC: sfc
- - -

Interm Csg. Cmt Vol.: 1650 cf
Hole Size: 12.25"
Top Job: no
Rtns to Sfc: 100 cf
TTOC: sfc
- - -

Prod. Csg. Cmt Vol.: 2400 cft
Hole Size: 8.75"
Top Job: no
Rtns to Sfc: no
TTOC: sfc
- - -

Liner Cmt Vol.:
Hole Size:
Top Job:
Rtns to Sfc:
TTOC:
- - -
Top of Formation:
UBA: 7514'
BLW: 7885'

Volume Behind Pipe:
1.3 Yield Assumed
Theoretical Calculations (TTOC)

OCCIDENTAL OF ELK HILLS INC

362-3G

Event: WELL MAINT - RIGLESS
Event End:
Sec. Reason:

Ground Elev: 960.0ft
KB to Ground: 10.0ft
Datum: ORIGINAL KB @ 970.00ft (default)
API No.: 0402929024

Wellbore: ORIGINAL HOLE
Top TMD: 10.0ft
PBMD: 6,703.0ft
Btm TMD: 7,684.0ft
Spud Date: 2/23/1951 00:00
BH Coord X: 6,149,149.22uss ft BH Coord Y: 2,285,683.13uss

Casing Shoes (ft) | Schematic (8/5/2009) | Openings Top/Btm/Type/Status

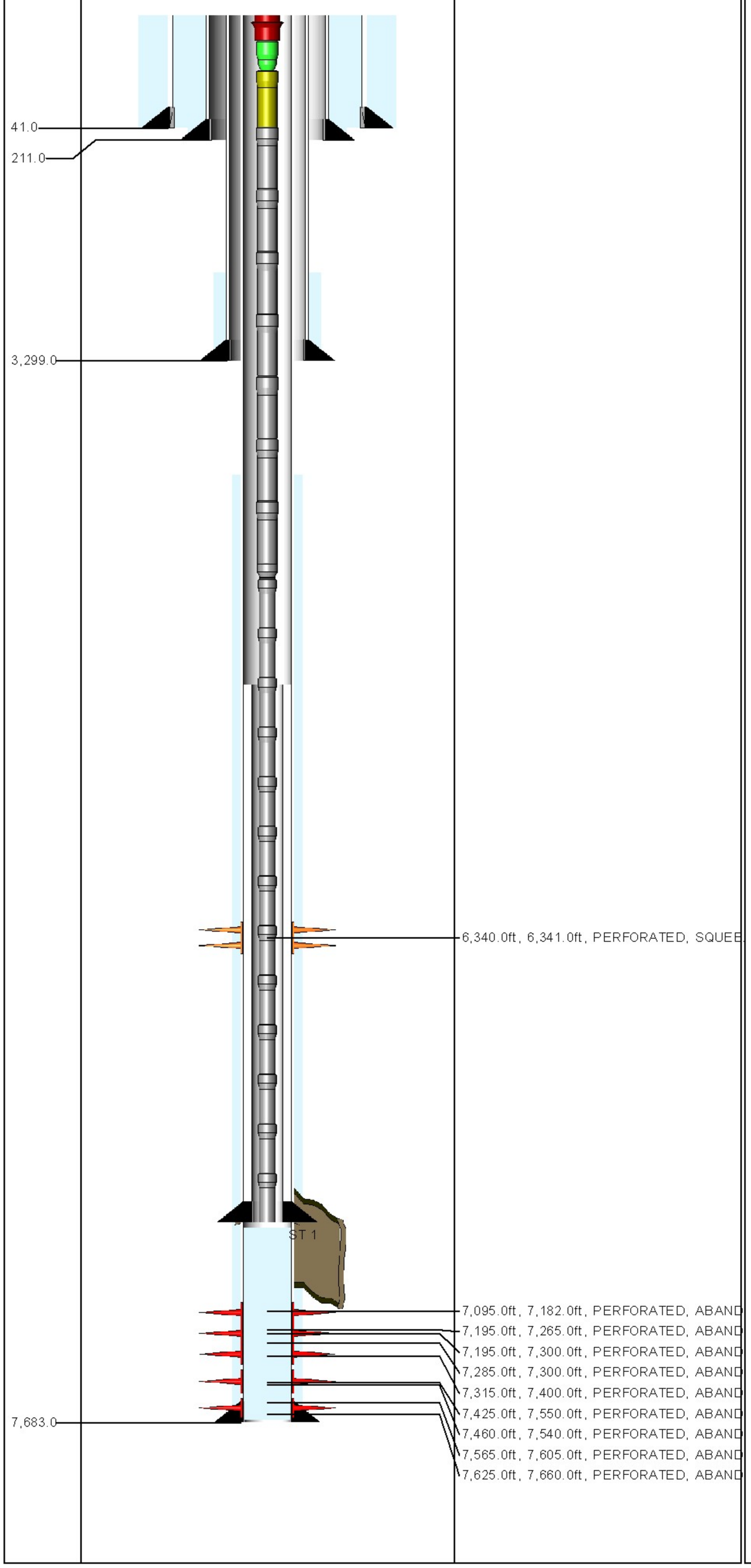

TUBING STRING Report Date: 4/23/2003 00:00

Component	Top MD (ft)	Btm MD (ft)
TH-DBB	10.0	10.6
FATNIP	10.6	12.0
PUPJNT	12.0	22.0
TBGJNT	22.0	6,136.1
XO	6,136.1	6,137.2
TBGJNT	6,137.2	7,009.6
SS-C	7,009.6	7,012.2
TBGJNT	7,012.2	7,043.5
ON-OFF	7,043.5	7,044.9
PKR-S	7,044.9	7,048.6
TBGJNT	7,048.6	7,111.1
PKR-S	7,111.1	7,116.6
TBGJNT	7,116.6	7,147.9
PNIP-O	7,147.9	7,148.9
PUPJNT	7,148.9	7,159.0
WLREG	7,159.0	7,159.4

CONDUCTOR CASING Report Date: 2/23/1951 00:00

Item Description	Btm MD(ft)
CASING JOINT(S) 26 in,	41.0

SURFACE CASING Report Date: 4/21/1951 00:00

Item Description	Btm MD (ft)
CASING JOINT(S) 16 in, , H-40, 65	211.0

INTERMEDIATE CASING Report Date: 4/27/1951 00:00

Item Description	Btm MD (ft)
CASING JOINT(S) 10.75 in, , J-55, 45.5	1,290.0
CASING JOINT(S) 10.75 in, , J-55, 40.5	3,214.0
CASING JOINT(S) 10.75 in, , J-55, 45.5	3,299.0

PRODUCTION CASING Report Date: 5/30/1951 00:00

Item Description	Btm MD (ft)
CASING JOINT(S) 7 in, , N-80, 26	71.0
CASING JOINT(S) 7 in, , N-80, 23	5,899.0
CASING JOINT(S) 7 in, , N-80, 26	7,683.0

LINER Report Date: 8/1/2002 00:00

Item Description	Btm MD (ft)
LINER HANGER PACKER 6.276 in, , 26	6,317.1
LOCATOR SUB 5 in, , 26	6,319.9
LINER HANGER 6.276 in, , 26	6,326.4
CROSSOVER 5 in, , P-110	6,327.1
CASING JOINT(S) 4.5 in, , P-110, 11.6	6,366.7
CASING JOINT(S) 4.5 in, , P-110, 11.6	7,626.8
BAFFLE PLATE 4.5 in, , P-110, 11.6	7,628.3
CASING JOINT(S) 4.5 in, , P-110, 11.6	7,667.4
FLOAT COLLAR 4.5 in, , P-110	7,668.5
CASING JOINT(S) 4.5 in, , P-110, 11.6	7,708.2
FLOAT SHOE 4.5 in, , P-110	7,710.0

OH ABND PLUG

202 CF CMT PLUG w/ full circ during cem oper. TTOC @ 6729'. Tagged @ 6939

Milled Window from 6703' - 6725'
Reamed from 6703' - 6716'

Well: 362-3G S/T/R: 3G/31S/24E

CASING CEMENT DETAIL
- - -
Sfc Csg. Cmt Vol.: 560cf (T)
Hole Size: 22"
Top Job:
Rtns to Sfc: Yes
TOC: Sfc
- - -

Interm Csg. Cmt Vol.: 690cf (T)
Hole Size: 15"
Top Job:
Rtns to Sfc: No
TTOC: ~2070' Thermo Survey
- - -

Prod. Csg. Cmt Vol.: 575cf (T)
Hole Size: 9.75"
Top Job:
Rtns to Sfc: No
TTOC: ~4900' Thermo Survey
- - -
Top of Formation:
UBA: 7077'
BLW: 7643'

Volume Behind Pipe
1.15 Yield Assumed on
Theoretical Calculations (T)

OCCIDENTAL OF ELK HILLS INC

362-3G

Event: WELL MAINT - RIGLESS
Event End:
Sec. Reason:

Ground Elev: 960.0ft
KB to Ground: 6,704.0ft
Datum: ORIGINAL KB @ 970.00ft (default)
API No.: 0402929024

Wellbore: ST 1
Top TMD: 6,704.0ft
PBMD: 7,621.0ft
Btm TMD: 7,715.0ft
Spud Date: 2/23/1951 00:00
BH Coord X: 6,149,130.54uss ft BH Coord Y: 2,285,826.83uss

Casing Shoes (ft) | Schematic (8/5/2009) | Openings Top/Btm/Type/Status

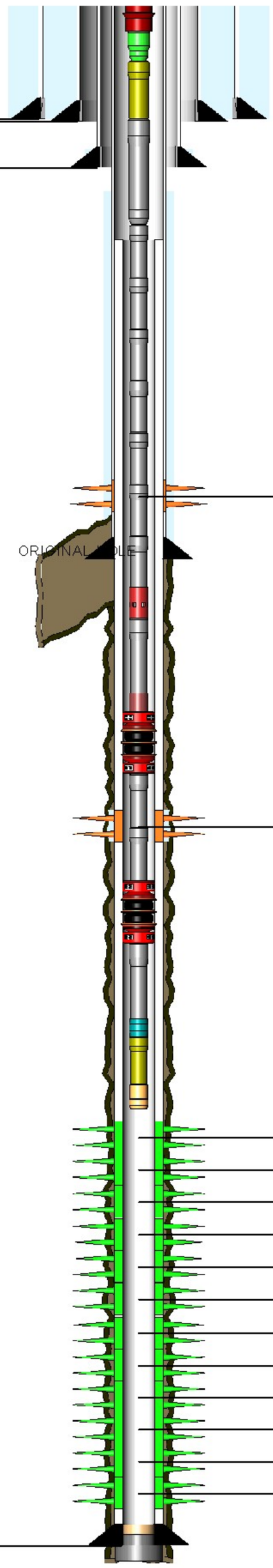

6,340.0ft, 6,341.0ft, PERFORATED, SQUE
7,079.0ft, 7,081.0ft, PERFORATED, SQUE
7,315.0ft, 7,327.0ft, PERFORATED, OPEN
7,331.0ft, 7,335.0ft, PERFORATED, OPEN
7,342.0ft, 7,348.0ft, PERFORATED, OPEN
7,358.0ft, 7,374.0ft, PERFORATED, OPEN
7,378.0ft, 7,383.0ft, PERFORATED, OPEN
7,387.0ft, 7,408.0ft, PERFORATED, OPEN
7,430.0ft, 7,440.0ft, PERFORATED, OPEN
7,445.0ft, 7,462.0ft, PERFORATED, OPEN
7,463.0ft, 7,471.0ft, PERFORATED, OPEN
7,472.0ft, 7,493.0ft, PERFORATED, OPEN
7,495.0ft, 7,505.0ft, PERFORATED, OPEN
7,507.0ft, 7,528.0ft, PERFORATED, OPEN

TUBING STRING Report Date: 4/23/2003 00:00

Component	Top MD (ft)	Btm MD (ft)
TH-DBB	10.0	10.6
FATNIP	10.6	12.0
PUPJNT	12.0	22.0
TBGJNT	22.0	6,136.1
XO	6,136.1	6,137.2
TBGJNT	6,137.2	7,009.6
SS-C	7,009.6	7,012.2
TBGJNT	7,012.2	7,043.5
ON-OFF	7,043.5	7,044.9
PKR-S	7,044.9	7,048.6
TBGJNT	7,048.6	7,111.1
PKR-S	7,111.1	7,116.6
TBGJNT	7,116.6	7,147.9
PNIP-O	7,147.9	7,148.9
PUPJNT	7,148.9	7,159.0
WLREG	7,159.0	7,159.4

PLUG BACK Report Date: 9/16/2004 00:00

Component	Top MD (ft)	Btm MD (ft)
FILL	7,592.0	7,621.0

PLUG BACK Report Date: 8/27/2002 00:00

Component	Top MD (ft)	Btm MD (ft)
CEMENT	7,621.0	7,710.0

PLUG BACK Report Date: 8/1/2002 00:00

Component	Top MD (ft)	Btm MD (ft)
CEMENT	7,710.0	7,715.0

CONDUCTOR CASING Report Date: 2/23/1951 00:00

Item Description	Btm MD(ft)
CASING JOINT(S) 26 in,	41.0

SURFACE CASING Report Date: 4/21/1951 00:00

Item Description	Btm MD (ft)
CASING JOINT(S) 16 in, , H-40, 65	211.0

INTERMEDIATE CASING Report Date: 4/27/1951 00:00

Item Description	Btm MD (ft)
CASING JOINT(S) 10.75 in, , J-55, 45.5	1,290.0
CASING JOINT(S) 10.75 in, , J-55, 40.5	3,214.0
CASING JOINT(S) 10.75 in, , J-55, 45.5	3,299.0

PRODUCTION CASING Report Date: 5/30/1951 00:00

Item Description	Btm MD (ft)
CASING JOINT(S) 7 in, , N-80, 26	71.0
CASING JOINT(S) 7 in, , N-80, 23	5,899.0
CASING JOINT(S) 7 in, , N-80, 26	7,683.0

LINER Report Date: 8/1/2002 00:00

Item Description	Btm MD (ft)
LINER HANGER PACKER 6.276 in, , 26	6,317.1
LOCATOR SUB 5 in, , 26	6,319.9
LINER HANGER 6.276 in, , 26	6,326.4
CROSSOVER 5 in, , P-110	6,327.1
CASING JOINT(S) 4.5 in, , P-110, 11.6	6,366.7
CASING JOINT(S) 4.5 in, , P-110, 11.6	7,626.8
BAFFLE PLATE 4.5 in, , P-110, 11.6	7,628.3
CASING JOINT(S) 4.5 in, , P-110, 11.6	7,667.4
FLOAT COLLAR 4.5 in, , P-110	7,668.5
CASING JOINT(S) 4.5 in, , P-110, 11.6	7,708.2
FLOAT SHOE 4.5 in, , P-110	7,710.0

Well: 362-3G-RD1 S/T/R: 3G/31S/24E

CASING CEMENT DETAIL
- - -
Sfc Csg. Cmt Vol.: 560cf (T)
Hole Size: 22"
Top Job:
Rtns to Sfc: Yes
TOC: Sfc
- - -

Interm Csg. Cmt Vol.: 690cf (T)
Hole Size: 15"
Top Job:
Rtns to Sfc: No
TTOC: ~2070' Thermo Survey
- - -

Prod. Csg. Cmt Vol.: 560cf (T)
Hole Size: 9.75"
Top Job:
Rtns to Sfc: No
TTOC: ~5300' Thermo Survey
- - -

Liner Cmt Vol.: 190cf
Hole Size: 6.125"
Top Job:
Rtns to TOL: Yes
TOC: TOL
- - -

Top of Formation:
UBA: 7069'
BLW: 7632'

Volume Behind Pipe
1.15 Yield Assumed on
Theoretical Calculations (T)

OCCIDENTAL OF ELK HILLS INC

362A-3G

Event: WELL MAINT - RIG
Event End: 6/2/2009 00:00
Sec. Reason: SPLIT

Ground Level: 961.0ft
Datum: ORIGINAL KB @ 978.00ft (default)
API No.: 0402981808

Wellbore: ORIGINAL HOLE
PBMD: 7,108.0ft
Btm TMD: 7,714.0ft
Spud Date: 2/2/1988 00:00
BH Coord X: 6,149,354.46uss ft
BH Coord Y: 2,286,565.66uss ft

Casing Shoes (ft) | Schematic (6/2/2009) | Openings Top/Btm/Type/Status

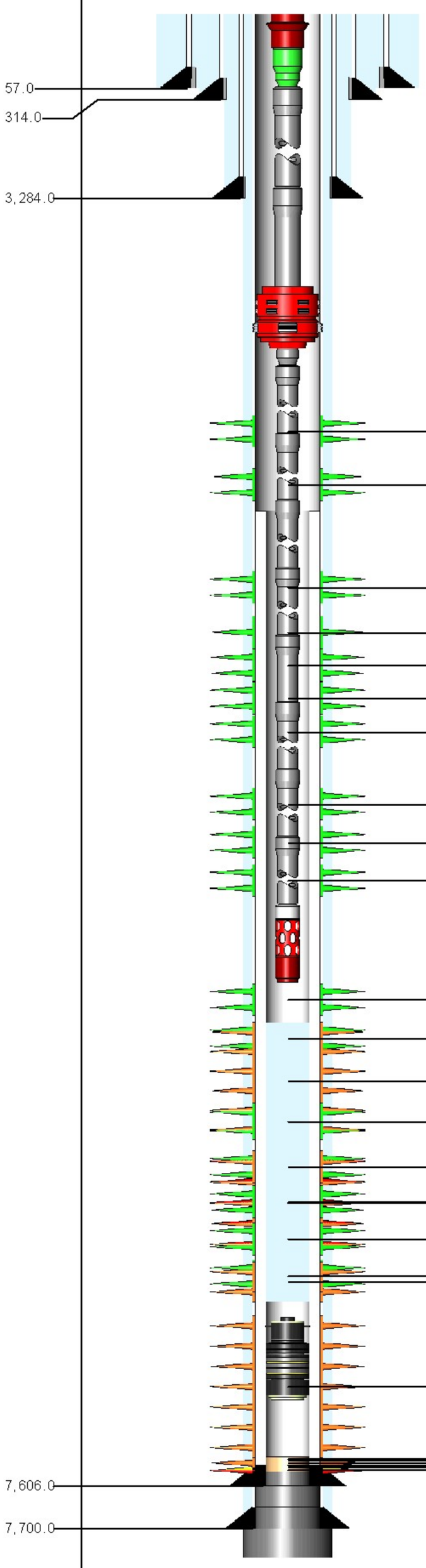

6,194.0ft, 6,208.0ft, PERFORATED, OPEN
6,330.0ft, 6,340.0ft, PERFORATED, OPEN
6,440.0ft, 6,450.0ft, PERFORATED, OPEN
6,527.0ft, 6,569.0ft, PERFORATED, OPEN
6,574.0ft, 6,585.0ft, PERFORATED, OPEN
6,590.0ft, 6,599.0ft, PERFORATED, OPEN
6,607.0ft, 6,613.0ft, PERFORATED, OPEN
6,808.0ft, 6,814.0ft, PERFORATED, OPEN
6,842.0ft, 6,856.0ft, PERFORATED, OPEN
6,876.0ft, 6,890.0ft, PERFORATED, OPEN
6,907.0ft, 6,920.0ft, PERFORATED, OPEN
6,942.0ft, 6,962.0ft, PERFORATED, OPEN
6,942.0ft, 6,990.0ft, PERFORATED, SQUEEZ
6,942.1ft, 6,990.1ft, PERFORATED, SQUEEZ
6,978.0ft, 6,990.0ft, PERFORATED, OPEN
7,016.0ft, 7,026.0ft, PERFORATED, OPEN
7,033.0ft, 7,039.0ft, PERFORATED, OPEN
7,016.0ft, 7,055.0ft, PERFORATED, ABANDO
7,016.1ft, 7,055.1ft, PERFORATED, SQUEEZ
7,048.0ft, 7,055.0ft, PERFORATED, OPEN
7,064.0ft, 7,082.0ft, PERFORATED, OPEN
7,065.0ft, 7,092.0ft, PERFORATED, SQUEEZ
7,106.0ft, 7,146.0ft, PERFORATED, SQUEEZ
7,158.0ft, 7,205.0ft, PERFORATED, SQUEEZ
7,220.0ft, 7,235.0ft, PERFORATED, SQUEEZ
7,283.0ft, 7,342.0ft, PERFORATED, SQUEEZ
7,362.0ft, 7,417.0ft, PERFORATED, SQUEEZ
7,437.0ft, 7,483.0ft, PERFORATED, SQUEEZ
7,527.0ft, 7,573.0ft, PERFORATED, ISOLATE
7,536.0ft, 7,573.0ft, PERFORATED, ABANDO

ROD STRING Report Date: 6/2/2009 00:00

Component	Top MD (ft)	Btm MD (ft)
POLRDL	0.0	36.0
PNYROD	36.0	60.0
R-4PER	60.0	2,430.0
ROD	2,430.0	3,750.0
R-4PER	3,750.0	5,250.0
R-4PER	5,250.0	5,850.0
R-6PER	5,850.0	6,900.0
RSTBAR	6,900.0	6,904.0
INSPMP	6,904.0	6,928.0

TUBING STRING Report Date: 6/1/2009 00:00

Component	Top MD (ft)	Btm MD (ft)
TH-DBB	17.0	17.8
FATNIP	17.8	18.5
CAS	18.5	5,883.7
AC	5,883.7	5,886.0
XO	5,886.0	5,887.1
CAS	5,887.1	6,899.2
PMPSH	6,899.2	6,900.2
PERFJT	6,900.2	6,904.3
STCOLL	6,904.3	6,904.7

PLUG BACK Report Date: 4/22/1994 00:00

Component	Top MD (ft)	Btm MD (ft)
BP-PRM	7,108.0	7,110.0

PLUG BACK Report Date: 4/22/1994 00:00

Component	Top MD (ft)	Btm MD (ft)
FILL	7,123.0	7,602.0

PLUG BACK Report Date: 3/30/1994 00:00

Component	Top MD (ft)	Btm MD (ft)
CEMENT	7,602.0	7,606.0
CEMENT	7,606.0	7,609.0

PLUG BACK Report Date: 4/29/1988 00:00

Component	Top MD (ft)	Btm MD (ft)
CEMENT	7,609.0	7,700.0

PLUG BACK Report Date: 3/15/1988 00:00

Component	Top MD (ft)	Btm MD (ft)
CEMENT	7,700.0	7,714.0

CONDUCTOR CASING Report Date: 2/2/1988 00:00

Item	OD (in)	Grade	Wt. (ppf)	TopMD (ft)	BtmMD (ft)
CASING JOINT(S)	20.000		94.00	17.0	57.0

SURFACE CASING Report Date: 2/18/1988 00:00

Item	OD (in)	Grade	Wt. (ppf)	TopMD (ft)	BtmMD (ft)
CASING JOINT(S)	13.375	H-40	48.00	17.0	314.0

INTERMEDIATE CASING Report Date: 2/25/1988 00:00

Item	OD (in)	Grade	Wt. (ppf)	TopMD (ft)	BtmMD (ft)
CASING JOINT(S)	9.625	K-55	40.00	17.0	3,284.0

PRODUCTION CASING Report Date: 3/15/1988 00:00

Item	OD (in)	Grade	Wt. (ppf)	TopMD (ft)	BtmMD (ft)
CASING JOINT(S)	7.000	N-80	26.00	17.0	78.0
CASING JOINT(S)	7.000	K-55	26.00	78.0	5,097.0
CASING JOINT(S)	7.000	K-55	23.00	5,097.0	7,014.0
CASING JOINT(S)	7.000	N-80	26.00	7,014.0	7,700.0

LINER Report Date: 3/29/1994 00:00

Item	OD (in)	Grade	Wt. (ppf)	TopMD (ft)	BtmMD (ft)
LINER HANGER	6.276	N-80	18.00	6,390.0	6,397.0
CASING JOINT(S)	5.000	N-80	18.00	6,397.0	7,606.0

Well: 362A-3G S/T/R: 3G/31S/24E

CASING CEMENT DETAIL
- - -
Sfc Csg. Cmt Vol.: 450 cf
Hole Size: 17.5
Top Job: no
Rtns to Sfc: 60 cf
TOC: sfc
- - -

Interm Csg. Cmt Vol.: 1630 cf
Hole Size: 12.25
Top Job: no
Rtns to Sfc: 50 cf
TOC: sfc
- - -

Prod. Csg. Cmt Vol.: 2000 cf
Hole Size: 8.75
Top Job: no
Rtns to Sfc: 0
TTOC: sfc

Liner Cmt Vol.: 119 cf
Hole Size:
Top Job: no
Rtns to Sfc: no
TOC: TOL 6390
- - -
Top of Formation:
UBA: 7085'
BLW: 7575'

Volume Behind Pipe:
1.3 Yield Assumed
Theoretical Calculations (TTOC)

OCCIDENTAL OF ELK HILLS INC

363-34S

Event: WELL MAINT - RIG
Event End: 5/5/2009 00:00
Sec. Reason: SPLIT
End Status: FINISHED - SUCCESS
Well Classification: DEVELOPMENT

Ground Level: 846.6ft
Datum: ORIGINAL KB @ 866.60ft (default)
API No.: 0403018695

Wellbore: ORIGINAL HOLE
PBMD: 7,690.0ft
Btm TMD: 7,820.0ft
Spud Date: 7/7/2001 00:00
BH Coord X: 6,148,973.32uss ft
BH Coord Y: 2,289,903.04uss ft

Casing Shoes (ft)	Schematic (5/5/2009)	Openings Top/Btm/Type/Status

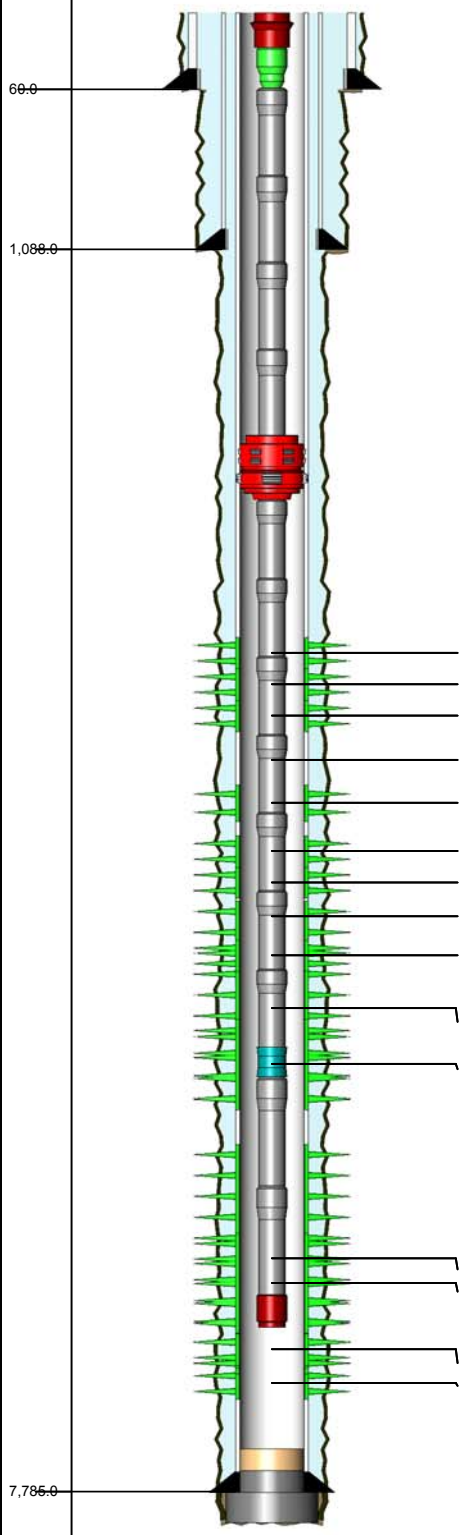

7,242.0ft, 7,260.0ft, PERFORATED, OPEN
7,260.0ft, 7,270.0ft, PERFORATED, OPEN
7,270.0ft, 7,315.0ft, PERFORATED, OPEN
7,270.0ft, 7,335.0ft, PERFORATED, OPEN
7,327.0ft, 7,336.0ft, PERFORATED, OPEN
7,350.0ft, 7,360.0ft, PERFORATED, OPEN
7,360.0ft, 7,368.0ft, PERFORATED, OPEN
7,370.0ft, 7,380.0ft, PERFORATED, OPEN
7,385.0ft, 7,412.0ft, PERFORATED, OPEN
7,372.0ft, 7,440.0ft, PERFORATED, OPEN
7,426.0ft, 7,440.0ft, PERFORATED, OPEN
7,445.0ft, 7,527.0ft, PERFORATED, OPEN
7,458.0ft, 7,490.0ft, PERFORATED, OPEN
7,492.0ft, 7,512.0ft, PERFORATED, OPEN
7,520.0ft, 7,558.0ft, PERFORATED, OPEN

ROD STRING Report Date: 4/29/2009 00:00

Component	Top MD (ft)	Btm MD (ft)
POLROD	0.0	36.0
PNYROD	36.0	40.0
ROD	40.0	1,360.0
ROD	1,360.0	3,100.0
R-6PER	3,100.0	6,130.0
ROD	6,130.0	7,450.0
RSTBAR	7,450.0	7,454.0
INSPMP	7,454.0	7,478.0

TUBING STRING Report Date: 4/30/2009 00:00

Component	Top MD (ft)	Btm MD (ft)
TH-DBB	20.0	20.0
FATNIP	20.0	21.1
TBGJNT	21.1	6,996.6
AC	6,996.6	6,999.1
TBGJNT	6,999.1	7,434.1
STNIP	7,434.1	7,435.2
TBGJNT	7,435.2	7,466.9
STCOLL	7,466.9	7,467.3

PLUG BACK Report Date: 9/11/2001 00:00

Component	Top MD (ft)	Btm MD (ft)
FILL	7,680.0	7,690.0

PLUG BACK Report Date: 8/12/2001 00:00

Component	Top MD (ft)	Btm MD (ft)
CEMENT	7,690.0	7,785.0

PLUG BACK Report Date: 8/12/2001 00:00

Component	Top MD (ft)	Btm MD (ft)
CEMENT	7,785.0	7,820.0

CONDUCTOR CASING Report Date: 6/20/2001 00:00

Item	OD (in)	Grade	Wt. (ppf)	TopMD (ft)	BtmMD (ft)
CASING JOINT(S)	16.000			20.0	60.0

SURFACE CASING Report Date: 7/8/2001 00:00

Item	OD (in)	Grade	Wt. (ppf)	TopMD (ft)	BtmMD (ft)
CASING JOINT(S)	9.625	K-55	36.00	20.0	1,040.5
	9.625			1,040.5	1,040.5
CASING JOINT(S)	9.625	K-55	36.00	1,040.5	1,086.9
GUIDE SHOE	9.625			1,086.9	1,088.0

PRODUCTION CASING Report Date: 8/12/2001 00:00

Item	OD (in)	Grade	Wt. (ppf)	TopMD (ft)	BtmMD (ft)
CASING JOINT(S)	7.000	N-80	29.00	20.0	7,013.1
FLAG JOINT	7.000	N-80	29.00	7,013.1	7,033.1
CASING JOINT(S)	7.000	N-80	29.00	7,033.1	7,690.8
FLOAT COLLAR	7.000	N-80	29.00	7,690.8	7,692.0
CASING JOINT(S)	7.000	N-80	29.00	7,692.0	7,783.9
FLOAT SHOE	7.000	N-80	29.00	7,783.9	7,785.0

Well: 363-34S S/T/R: 34S/30S/24E

CASING CEMENT DETAIL
- - -
Sfc Csg. Cmt Vol.: 679 cf
Hole Size: 12-1/4" (9-5/8" Casing)
Top Job: NO
Rtns to Sfc: YES
TTOC: NA
- - -

Interm Csg. Cmt Vol.: NONE
Hole Size:
Top Job:
Rtns to Sfc:
TTOC:
- - -

Prod. Csg. Cmt Vol.: 5028 cf
Hole Size: 8-3/4" (7" Casing)
Top Job: NO
Rtns to Sfc: NO
TTOC: Surface
- - -

Liner Cmt Vol.: NONE
Hole Size:
Top Job:
Rtns to Sfc:
TTOC:
- - -
Top of Formation:
UBA: 7269'
BLW: 7636'

Volume Behind Pipe:
1.3 Yield Assumed
Theoretical Calculations (TTOC)

OCCIDENTAL OF ELK HILLS INC

364-34S

Event: WELL MAINT - RIG
Event End: 12/10/2006 00:00
Sec. Reason: PIN PART
End Status: FINISHED - SUCCESS
Well Classification: DEVELOPMENT

Ground Level: 811.0ft
Datum: ORIGINAL KB @ 824.00ft (default)
API No.: 0402966851

Wellbore: ORIGINAL HOLE
PBMD: 7,294.0ft
Btm TMD: 7,350.0ft
Spud Date: 3/16/1978 00:00
BH Coord X: 6,149,029.22uss ft
BH Coord Y: 2,289,421.97uss ft

Casing Shoes (ft)	Schematic (1/1/2007)	Openings Top/Btm/Type/Status

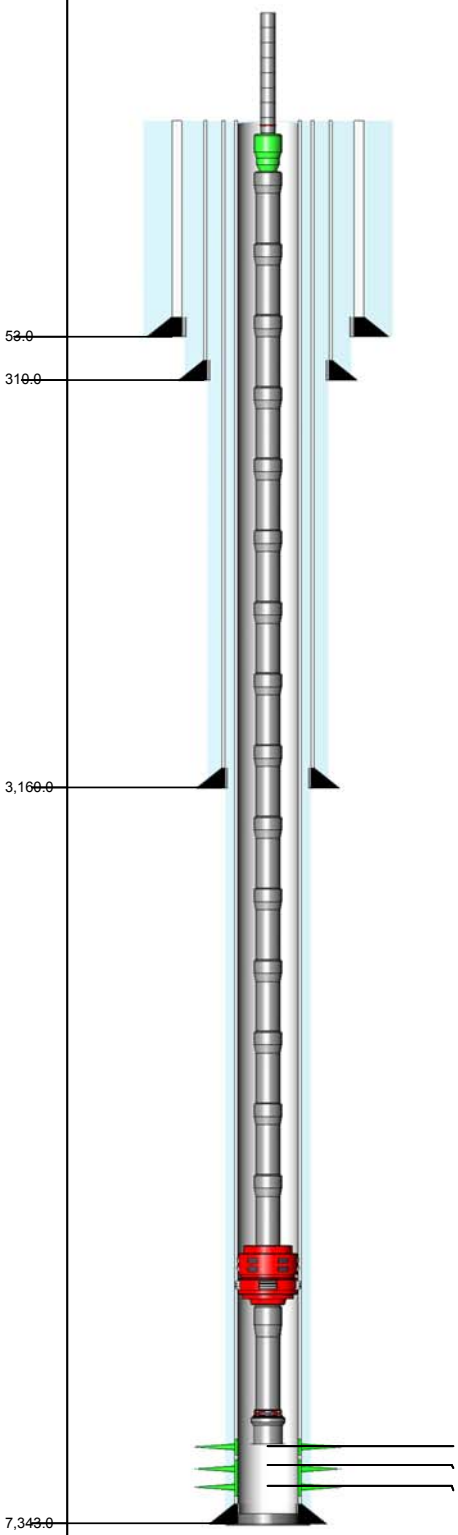

6,930.0ft, 7,007.0ft, PERFORATED, OPEN
7,031.0ft, 7,090.0ft, PERFORATED, OPEN
7,115.0ft, 7,208.0ft, PERFORATED, OPEN

ROD STRING Report Date: 12/10/2006 00:00

Component	Top MD (ft)	Btm MD (ft)
POLROD	0.0	30.0
PNYROD	30.0	38.0
ROD	38.0	2,168.0
ROD	2,168.0	5,408.0
R-4PER	5,408.0	6,878.0
RSTBAR	6,878.0	6,882.0
INSPMP	6,882.0	6,906.0

TUBING STRING Report Date: 10/9/2005 00:00

Component	Top MD (ft)	Btm MD (ft)
TH-DBB	13.0	13.8
FATNIP	13.8	14.5
TBGJNT	14.5	6,477.3
AC	6,477.3	6,479.7
TBGJNT	6,479.7	6,885.6
STNIP	6,885.6	6,886.7
PERFJT	6,886.7	6,890.8
XO	6,890.8	6,891.9
TBGJNT	6,891.9	6,954.8
PRGVLV	6,954.8	6,955.4

PLUG BACK Report Date: 8/9/1982 00:00

Component	Top MD (ft)	Btm MD (ft)
CEMENT	7,294.0	7,343.0

PLUG BACK Report Date: 6/20/1982 00:00

Component	Top MD (ft)	Btm MD (ft)
CEMENT	7,343.0	7,350.0

CONDUCTOR CASING Report Date: 3/16/1978 00:00

Item	OD (in)	Grade	Wt. (ppf)	TopMD (ft)	BtmMD (ft)
CASING JOINT(S)	20.000			13.0	53.0

SURFACE CASING Report Date: 5/28/1982 00:00

Item	OD (in)	Grade	Wt. (ppf)	TopMD (ft)	BtmMD (ft)
CASING JOINT(S)	13.375	H-40	48.00	13.0	310.0

INTERMEDIATE CASING Report Date: 6/2/1982 00:00

Item	OD (in)	Grade	Wt. (ppf)	TopMD (ft)	BtmMD (ft)
CASING JOINT(S)	9.625	K-55	36.00	13.0	3,160.0

PRODUCTION CASING Report Date: 6/20/1982 00:00

Item	OD (in)	Grade	Wt. (ppf)	TopMD (ft)	BtmMD (ft)
CASING JOINT(S)	7.000	N-80	26.00	13.0	73.6
CASING JOINT(S)	7.000	K-55	23.00	73.6	4,988.5
CASING JOINT(S)	7.000	K-55	26.00	4,988.5	6,364.6
FLAG JOINT	7.000	K-55	26.00	6,364.6	6,383.1
CASING JOINT(S)	7.000	K-55	26.00	6,383.1	6,636.5
CASING JOINT(S)	7.000	N-80	26.00	6,636.5	7,293.5
FLOAT COLLAR	7.000	N-80	26.00	7,293.5	7,295.7
CASING JOINT(S)	7.000	N-80	26.00	7,295.7	7,341.9
GUIDE SHOE	7.000	N-80	26.00	7,341.9	7,343.0

Well: 364-34S S/T/R: 34S/30S/24E

CASING CEMENT DETAIL
- - -
Sfc Csg. Cmt Vol.: 485 cf
Hole Size: 17-1/2" (13-3/8" Casing)
Top Job: NO
Rtns to Sfc: YES
TTOC: NA
- - -

Interm Csg. Cmt Vol.: 1830 cf
Hole Size: 12-1/4" (9-5/8" Casing)
Top Job: NO
Rtns to Sfc: YES
TTOC: NA
- - -

Prod. Csg. Cmt Vol.: 1660 cf
Hole Size: 8-3/4" (7" Casing)
Top Job: NO
Rtns to Sfc: NO
TTOC: Surface
- - -

Liner Cmt Vol.: NONE
Hole Size:
Top Job:
Rtns to Sfc:
TTOC:
- - -
Top of Formation:
UBA: 6957'
BLW: 7240'

Volume Behind Pipe:
1.3 Yield Assumed
Theoretical Calculations (TTOC)

OCCIDENTAL OF ELK HILLS INC

364-35S

Event: NOI - WORKOVER
Event End:
Sec. Reason:

Ground Level: 644.0ft
Datum: ORIGINAL KB @ 658.00ft (default)
API No.: 0402958450

Wellbore: ORIGINAL HOLE
PBMD: 7,150.0ft
Btm TMD: 8,410.0ft
Spud Date: 8/17/1978 00:00
BH Coord X: 6,154,445.85uss ft
BH Coord Y: 2,289,212.83uss ft

Casing Shoes (ft) | Schematic (10/1/2008) | Openings Top/Btm/Type/Status

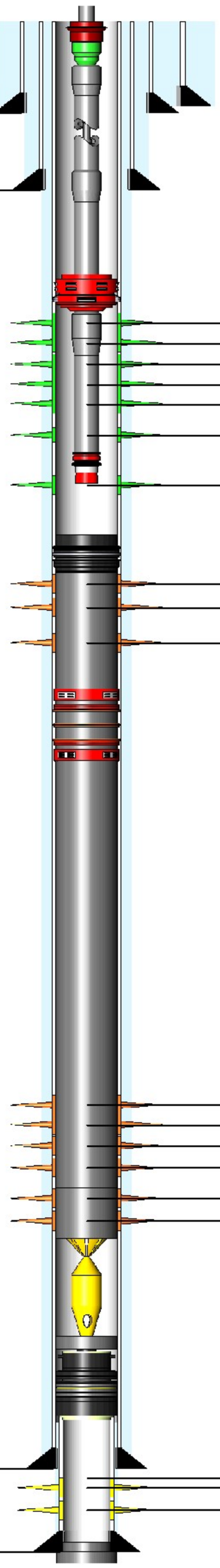

54.0
322.0
3,200.0
8,120.0
8,402.0

6,648.0ft, 6,724.0ft, PERFORATED, OPEN
6,782.0ft, 6,794.0ft, PERFORATED, OPEN
6,860.0ft, 6,878.0ft, PERFORATED, OPEN
6,930.0ft, 6,940.0ft, PERFORATED, OPEN
6,958.0ft, 6,987.0ft, PERFORATED, OPEN
7,028.0ft, 7,072.0ft, PERFORATED, OPEN
7,110.0ft, 7,140.0ft, PERFORATED, OPEN
7,158.0ft, 7,175.0ft, PERFORATED, SQUEEZ
7,185.0ft, 7,218.0ft, PERFORATED, SQUEEZ
7,242.0ft, 7,290.0ft, PERFORATED, SQUEEZ
7,316.0ft, 7,360.0ft, PERFORATED, SQUEEZ
7,380.0ft, 7,430.0ft, PERFORATED, SQUEEZ
7,455.0ft, 7,520.0ft, PERFORATED, SQUEEZ
7,545.0ft, 7,615.0ft, PERFORATED, SQUEEZ
7,645.0ft, 7,740.0ft, PERFORATED, SQUEEZ
7,800.0ft, 7,903.0ft, PERFORATED, SQUEEZ
8,157.0ft, 8,157.0ft, PERFORATED, SQUEEZ
8,160.0ft, 8,162.0ft, PERFORATED, ISOLATE
8,190.0ft, 8,310.0ft, PERFORATED, ISOLATE

PACKER ASSEMBLY (RETRIEVABLE) Report Date: 3/13/19

ROD STRING Report Date: 9/10/2008 00:00

Component	Top MD (ft)	Btm MD (ft)
POLROD	0.0	36.0
PNYROD	36.0	44.0
ROD	44.0	2,684.0
ROD	2,684.0	4,724.0
ROD	4,724.0	7,064.0
RSTBAR	7,064.0	7,068.0
INSPMP	7,068.0	7,092.0

TUBING STRING Report Date: 9/9/2008 00:00

Component	Top MD (ft)	Btm MD (ft)
TH-DBB	14.0	14.0
FATNIP	14.0	14.7
CAS	14.7	6,560.1
AC	6,560.1	6,562.5
CAS	6,562.5	7,086.1
STNIP	7,086.1	7,087.2
GASANC	7,087.2	7,123.2

PLUG BACK Report Date: 8/14/2002 00:00

Component	Top MD (ft)	Btm MD (ft)
CR-PRM	7,150.0	7,154.0

PLUG BACK Report Date: 8/15/2002 00:00

Component	Top MD (ft)	Btm MD (ft)
CEMENT	7,150.0	7,633.0

PACKER ASSEMBLY (RETRIEVABLE) Report Date: 3/13/19

Component	Top MD (ft)	Btm MD (ft)
PKR-S	7,294.4	7,297.4
PUPJNT	7,297.4	7,301.5
XO	7,301.5	7,302.2
TBGJNT	7,302.2	7,312.3
NOGO-O	7,312.3	7,313.4
WLREG	7,313.4	7,313.8

PLUG BACK Report Date: 2/20/1988 00:00

Component	Top MD (ft)	Btm MD (ft)
CEMENT	7,633.0	7,932.0

PLUG BACK Report Date: 2/21/1988 00:00

Component	Top MD (ft)	Btm MD (ft)
JUNK	7,932.0	7,973.0

PLUG BACK Report Date: 4/18/1979 00:00

Component	Top MD (ft)	Btm MD (ft)
CEMENT	7,973.0	7,982.0

PLUG BACK Report Date: 4/17/1979 00:00

Component	Top MD (ft)	Btm MD (ft)
BP-PRM	7,982.0	7,985.0

PLUG BACK Report Date: 2/6/1979 00:00

Component	Top MD (ft)	Btm MD (ft)
PLUGBK	8,359.0	8,402.0

PLUG BACK Report Date: 2/1/1979 00:00

Component	Top MD (ft)	Btm MD (ft)
CEMENT	8,402.0	8,410.0

CONDUCTOR CASING Report Date: 8/17/1978 00:00

Item	OD (in)	Grade	Wt. (ppf)	TopMD (ft)	BtmMD (ft)
CASING JOINT(S)	20.000			14.0	54.0

SURFACE CASING Report Date: 12/11/1978 00:00

Item	OD (in)	Grade	Wt. (ppf)	TopMD (ft)	BtmMD (ft)
CASING JOINT(S)	13.375	H-40	48.00	14.0	322.0

INTERMEDIATE CASING Report Date: 12/16/1978 00:00

Item	OD (in)	Grade	Wt. (ppf)	TopMD (ft)	BtmMD (ft)
CASING JOINT(S)	9.625	N-80	40.00	14.0	3,200.0

PRODUCTION CASING Report Date: 1/14/1979 00:00

Item	OD (in)	Grade	Wt. (ppf)	TopMD (ft)	BtmMD (ft)
CASING JOINT(S)	7.000	K-55	26.00	14.0	76.0
CASING JOINT(S)	7.000	K-55	23.00	76.0	4,948.0
CASING JOINT(S)	7.000	K-55	26.00	4,948.0	6,999.6
FLAG JOINT	7.000	K-55	26.00	6,999.6	7,019.1
CASING JOINT(S)	7.000	K-55	26.00	7,019.1	8,120.0

LINER Report Date: 2/1/1979 00:00

Item	OD (in)	Grade	Wt. (ppf)	TopMD (ft)	BtmMD (ft)
LINER HANGER	5.500		20.00	8,017.0	8,019.0
CASING JOINT(S)	5.500	K-55	20.00	8,019.0	8,103.5
CASING JOINT(S)	5.500	K-55	20.00	8,103.5	8,146.1
CASING JOINT(S)	5.500	K-55	20.00	8,146.1	8,401.0
GUIDE SHOE	5.500		20.00	8,401.0	8,402.0

Well: 364-35S S/T/R: 36/30S/24E

CASING CEMENT DETAIL
- - -
Sfc Csg. Cmt Vol.: 440 cf
Hole Size: 17.5
Top Job: no
Rtns to Sfc: trace
TOC: sfc
- - -

Interm Csg. Cmt Vol.: 1400 cf
Hole Size: 12.25
Top Job: no
Rtns to Sfc: 90 cf
TOC: sfc
- - -

Prod. Csg. Cmt Vol.: 3555 cf
Hole Size: 8.75
Top Job: no
Rtns to Sfc: 80 cf
TOC: sfc
- - -

Liner Cmt Vol.: 65 cf
Hole Size: 6.125
Top Job: no
Rtns to Sfc: 0
TOC: 6762'
- - -
Top of Formation:
UBA: 7155'
BLW: 7623'

Volume Behind Pipe:
1.3 Yield Assumed
Theoretical Calculations (TTOC)
JEP

OCCIDENTAL OF ELK HILLS INC

364-3G

Event: WELL MAINT - RIGLESS
Event End: 7/11/2007 00:00
Sec. Reason: IDLE WELL TESTING

Ground Elev: 867.0ft
KB to Ground: 15.0ft
Datum: ORIGINAL KB @ 882.00ft (KEY 0329)(default)
API No.: 0402955611

Wellbore: ORIGINAL HOLE
Top TMD: 15.0ft
PBMD: 7,015.0ft
Btm TMD: 7,988.0ft
Spud Date: 6/1/1977 00:00
BH Coord X: 6,148,838.98uss ft BH Coord Y: 2,284,518.62uss

Casing Shoes (ft) | Schematic (8/1/2007) | Openings Top/Btm/Type/Status

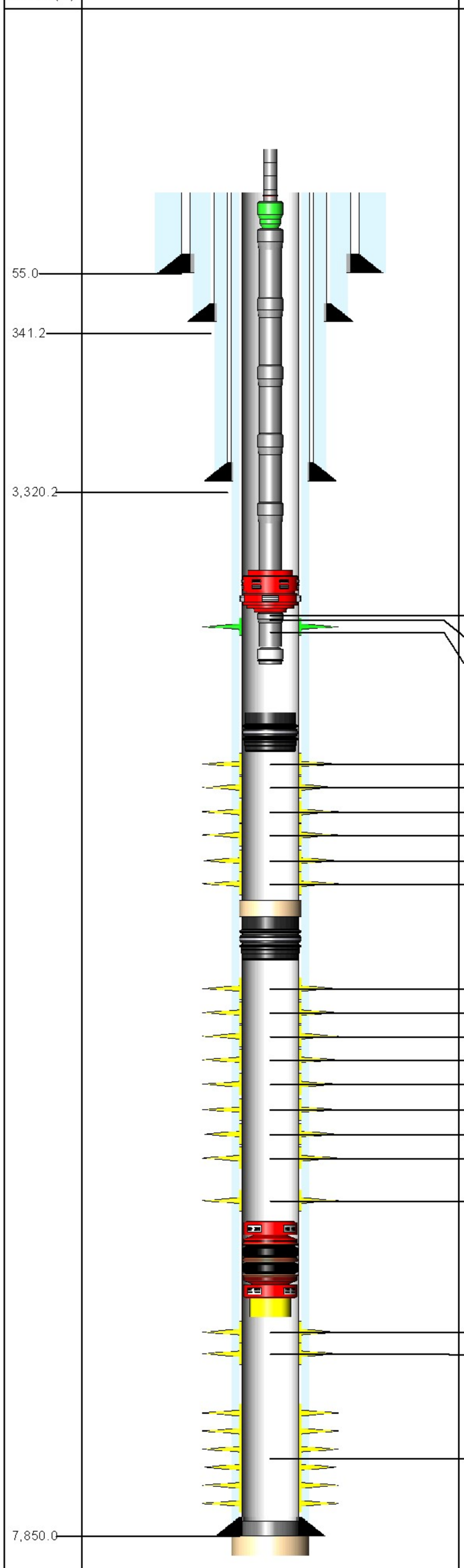

6,550.0ft, 6,551.0ft, WSO PERFS, SQUEEZ
6,670.0ft, 6,693.0ft, PERFORATED, OPEN
6,700.0ft, 6,708.0ft, PERFORATED, OPEN
7,028.0ft, 7,036.0ft, PERFORATED, ISOLAT
7,047.0ft, 7,053.0ft, PERFORATED, ISOLAT
7,072.0ft, 7,082.0ft, PERFORATED, ISOLAT
7,090.0ft, 7,098.0ft, PERFORATED, ISOLAT
7,118.0ft, 7,122.0ft, PERFORATED, ISOLAT
7,128.0ft, 7,144.0ft, PERFORATED, ISOLAT
7,292.0ft, 7,356.0ft, PERFORATED, ISOLAT
7,370.0ft, 7,396.0ft, PERFORATED, ISOLAT
7,406.0ft, 7,419.0ft, PERFORATED, ISOLAT
7,429.0ft, 7,458.0ft, PERFORATED, ISOLAT
7,470.0ft, 7,485.0ft, PERFORATED, ISOLAT
7,500.0ft, 7,520.0ft, PERFORATED, ISOLAT
7,530.0ft, 7,545.0ft, PERFORATED, ISOLAT
7,552.0ft, 7,580.0ft, PERFORATED, ISOLAT
7,626.0ft, 7,645.0ft, PERFORATED, ISOLAT
7,670.0ft, 7,704.0ft, PERFORATED, ISOLAT
7,704.0ft, 7,755.0ft, PERFORATED, ISOLAT
7,780.0ft, 7,828.0ft, PERFORATED, ISOLAT

ROD STRING Report Date: 11/15/2005 00:00

Component	Top MD (ft)	Btm MD (ft)
POLROD	0.0	30.0
ROD	30.0	2,910.0
ROD	2,910.0	6,690.0
INSPMP	6,690.0	6,720.0

TUBING STRING Report Date: 10/21/2005 00:00

Component	Top MD (ft)	Btm MD (ft)
TH-DBB	15.0	15.6
FATNIP	15.6	16.4
TBGJNT	16.4	6,471.5
AC	6,471.5	6,473.8
TBGJNT	6,473.8	6,724.5
PMPSH	6,724.5	6,725.6
TBGJNT	6,725.6	6,757.0

PLUG BACK Report Date: 10/20/2005 00:00

Component	Top MD (ft)	Btm MD (ft)
BP-RET	7,015.0	7,018.0

PLUG BACK Report Date: 3/2/2005 00:00

Component	Top MD (ft)	Btm MD (ft)
SAND	7,155.0	7,160.0
BP-RET	7,160.0	7,163.5

PACKER ASSEMBLY (PERMANENT) Report Date: 6/10/1986 00:00

Component	Top MD (ft)	Btm MD (ft)
PKR-S	7,648.0	7,654.0
MOEXT	7,654.0	7,664.0

PLUG BACK Report Date: 8/22/1983 00:00

Component	Top MD (ft)	Btm MD (ft)
CEMENT	7,840.0	7,850.0

PLUG BACK Report Date: 6/23/1977 00:00

Component	Top MD (ft)	Btm MD (ft)
MUD	7,850.0	8,030.0

CONDUCTOR CASING Report Date: 6/1/1977 00:00

Item Description	Btm MD(ft)
CASING JOINT(S) 20 in,	55.0

SURFACE CASING Report Date: 6/3/1977 00:00

Item Description	Btm MD (ft)
CASING JOINT(S) 13.375 in, , K-55, 54.5	338.8
GUIDE SHOE 13.375 in,	340.0

INTERMEDIATE CASING Report Date: 6/6/1977 00:00

Item Description	Btm MD (ft)
CASING JOINT(S) 9.625 in, , N-80, 40	3,317.8
GUIDE SHOE 9.625 in,	3,319.0

PRODUCTION CASING Report Date: 6/23/1977 00:00

Item Description	Btm MD (ft)
CASING JOINT(S) 7 in, , K-55, 26	76.9
CASING JOINT(S) 7 in, , K-55, 23	4,993.1
CASING JOINT(S) 7 in, , K-55, 26	6,883.0
FLAG JOINT 7 in, , K-55, 26	6,901.0
CASING JOINT(S) 7 in, , K-55, 26	7,822.1
FLOAT COLLAR 7 in, , K-55, 26	7,823.5
CASING JOINT(S) 7 in, , K-55, 26	7,847.6
FLOAT SHOE 7 in, , K-55, 26	7,850.0

Well: 364-3G S/T/R: 3G/31S/24E

CASING CEMENT DETAIL
- - -
Sfc Csg. Cmt Vol.: 390cf
Hole Size: 17.5"
Top Job:
Rtns to Sfc: Yes
TOC: Sfc
- - -

Interm Csg. Cmt Vol.: 1654cf
Hole Size: 12.25"
Top Job:
Rtns to Sfc: Yes
TOC: Sfc
- - -

Prod. Csg. Cmt Vol.: 220cf
Hole Size: 8.75"
Top Job:
Rtns to Sfc: No
TTOC: Sfc
- - -

Liner Cmt Vol.:
Hole Size:
Top Job:
Rtns to Sfc:
TOC:
- - -

Top of Formation:
UBA: 7314'
BLW: 7959'

Volume Behind Pipe
1.15 Yield Assumed on
Theoretical Calculations (T)

OCCIDENTAL OF ELK HILLS INC

365-34S

Event: WELL MAINT - RIG
Event End: 9/6/2007 00:00
Sec. Reason: BODY BREAK
End Status: FINISHED - SUCCESS
Well Classification: DEVELOPMENT - CLASS III

Ground Level: 801.0ft
Datum: ORIGINAL KB @ 814.00ft (default)
API No.: 0402967216

Wellbore: ORIGINAL HOLE
PBMD: 6,730.0ft
Btm TMD: 7,175.0ft
Spud Date: 7/6/1982 00:00
BH Coord X: 6,148,991.59uss ft
BH Coord Y: 2,288,886.08uss ft

Casing Shoes (ft)	Schematic (10/1/2007)	Openings Top/Btm/Type/Status

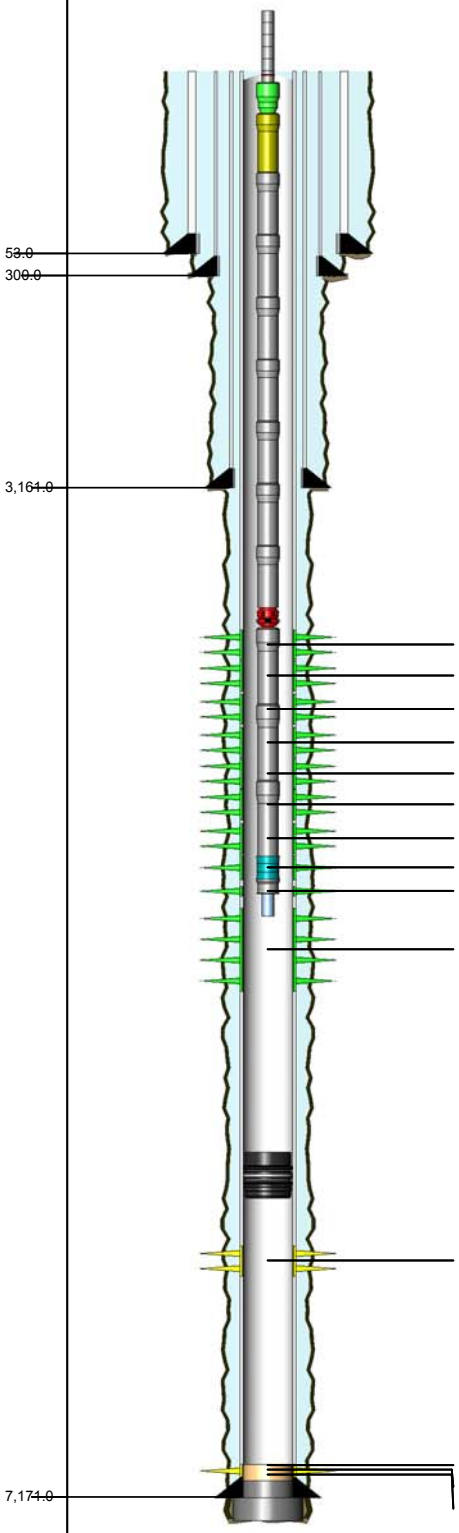

6,266.0ft, 6,274.0ft, PERFORATED, OPEN
6,296.0ft, 6,334.0ft, PERFORATED, OPEN
6,408.0ft, 6,418.0ft, PERFORATED, OPEN
6,484.0ft, 6,492.0ft, PERFORATED, OPEN
6,510.0ft, 6,516.0ft, PERFORATED, OPEN
6,530.0ft, 6,550.0ft, PERFORATED, OPEN
6,610.0ft, 6,638.0ft, PERFORATED, OPEN
6,648.0ft, 6,672.0ft, PERFORATED, OPEN
6,682.0ft, 6,688.0ft, PERFORATED, OPEN
6,700.0ft, 6,715.0ft, PERFORATED, OPEN
6,756.0ft, 6,825.0ft, PERFORATED, ISOLATED
6,852.0ft, 6,895.0ft, PERFORATED, ISOLATED
6,920.0ft, 6,975.0ft, PERFORATED, ISOLATED
7,000.0ft, 7,063.0ft, PERFORATED, ISOLATED

ROD STRING Report Date: 9/6/2007 00:00

Component	Top MD (ft)	Btm MD (ft)
POLROD	0.0	30.0
ROD	30.0	2,270.0
ROD	2,270.0	6,680.0
RSTBAR	6,680.0	6,684.0
INSPMP	6,684.0	6,708.0

TUBING STRING Report Date: 10/5/2005 00:00

Component	Top MD (ft)	Btm MD (ft)
TH-DBB	13.0	13.7
FATNIP	13.7	14.4
PUPJNT	14.4	24.3
TBGJNT	24.3	6,210.2
AC	6,210.2	6,212.6
TBGJNT	6,212.6	6,652.5
STNIP	6,652.5	6,653.6
TBGJNT	6,653.6	6,684.9
STCOLL	6,684.9	6,685.4

PLUG BACK Report Date: 12/12/1996 00:00

Component	Top MD (ft)	Btm MD (ft)
BP-DR	6,730.0	6,733.0

PLUG BACK Report Date: 12/12/1996 00:00

Component	Top MD (ft)	Btm MD (ft)
FILL	6,846.0	7,125.0

PLUG BACK Report Date: 10/2/1982 00:00

Component	Top MD (ft)	Btm MD (ft)
CEMENT	7,125.0	7,171.0

PLUG BACK Report Date: 8/7/1982 00:00

Component	Top MD (ft)	Btm MD (ft)
CEMENT	7,171.0	7,175.0

CONDUCTOR CASING Report Date: 7/6/1982 00:00

Item	OD (in)	Grade	Wt. (ppf)	TopMD (ft)	BtmMD (ft)
CASING JOINT(S)	20.000			13.0	53.0

SURFACE CASING Report Date: 7/16/1982 00:00

Item	OD (in)	Grade	Wt. (ppf)	TopMD (ft)	BtmMD (ft)
CASING JOINT(S)	13.375	H-40	48.00	13.0	300.0

INTERMEDIATE CASING Report Date: 7/21/1982 00:00

Item	OD (in)	Grade	Wt. (ppf)	TopMD (ft)	BtmMD (ft)
CASING JOINT(S)	9.625	K-55	40.00	13.0	3,161.0

PRODUCTION CASING Report Date: 8/7/1982 00:00

Item	OD (in)	Grade	Wt. (ppf)	TopMD (ft)	BtmMD (ft)
CASING JOINT(S)	7.000	K-55	26.00	13.0	76.3
CASING JOINT(S)	7.000	K-55	23.00	76.3	4,879.7
CASING JOINT(S)	7.000	K-55	26.00	4,879.7	6,205.2
FLAG JOINT	7.000	K-55	26.00	6,205.2	6,224.9
CASING JOINT(S)	7.000	K-55	26.00	6,224.9	7,125.0
FLOAT COLLAR	7.000	K-55	26.00	7,125.0	7,127.6
CASING JOINT(S)	7.000	K-55	26.00	7,127.6	7,169.9
FLOAT SHOE	7.000	K-55	26.00	7,169.9	7,171.0

Well: 365-34S S/T/R: 34S/30S/24E

CASING CEMENT DETAIL
- - -
Sfc Csg. Cmt Vol.: 483 cf
Hole Size: 17-1/2" (13-3/8" Casing)
Top Job: NO
Rtns to Sfc: YES
TTOC: NA
- - -

Interm Csg. Cmt Vol.: 2000 cf
Hole Size: 12-1/4" (9-5/8' Casing)
Top Job: NO
Rtns to Sfc: Surface
TTOC: NA
- - -

Prod. Csg. Cmt Vol.: 1600 cf
Hole Size: 8-3/4" (7" Casing)
Top Job: NO
Rtns to Sfc: YES
TTOC: NA
- - -

Liner Cmt Vol.:
Hole Size:
Top Job:
Rtns to Sfc:
TTOC:
- - -
Top of Formation:
UBA: 6759'
BLW: 7084'

Volume Behind Pipe:
1.3 Yield Assumed
Theoretical Calculations (TTOC)

OCCIDENTAL OF ELK HILLS INC

365X-35S

Event: NOI - WORKOVER
Event End:
Sec. Reason:

Ground Level: 670.4ft
Datum: ORIGINAL KB @ 693.40ft (default)
API No.: 0403022597

Wellbore: ORIGINAL HOLE
PBMD: 7,084.0ft
Btm TMD: 7,675.0ft
Spud Date: 6/14/2003 00:00
BH Coord X: 6,154,029.81uss ft
BH Coord Y: 2,289,120.97uss ft

Casing Shoes (ft) | Schematic (8/1/2006) | Openings Top/Btm/Type/Status

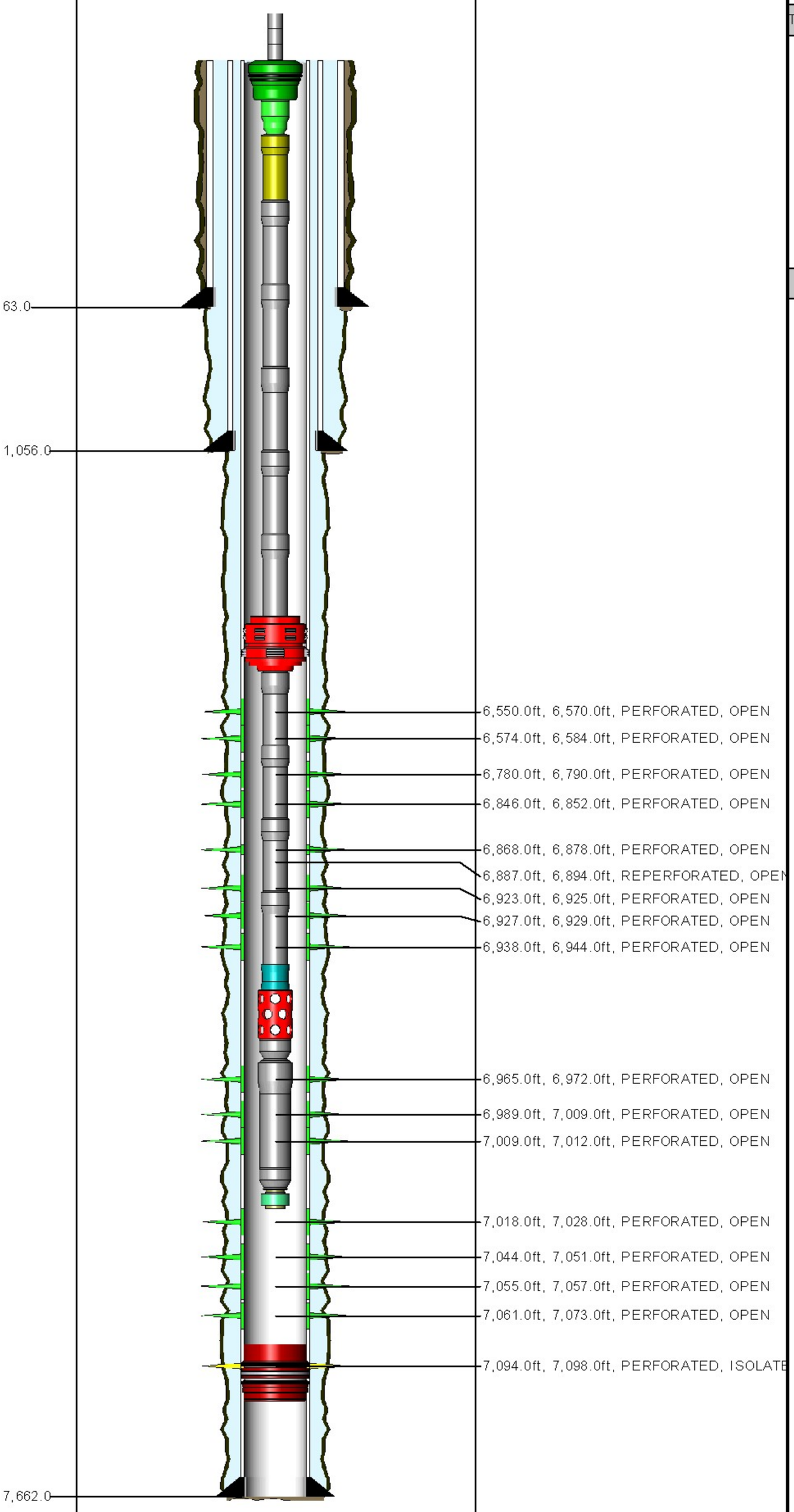

ROD STRING Report Date: 7/21/2006 00:00

Component	Top MD (ft)	Btm MD (ft)
POLROD	0.0	30.0
PNYROD	30.0	44.0
ROD	44.0	2,534.0
ROD	2,534.0	5,054.0
R-4PER	5,054.0	6,854.0
RSTBAR	6,854.0	6,858.0
INSPMP	6,858.0	6,882.0

TUBING STRING Report Date: 11/19/2004 00:0

Component	Top MD (ft)	Btm MD (ft)
TH-D	23.0	23.8
FATNIP	23.8	24.5
PUPJNT	24.5	28.9
TBGJNT	28.9	5,907.6
AC	5,907.6	5,910.0
TBGJNT	5,910.0	6,946.0
STNIP	6,946.0	6,947.1
PERFJT	6,947.1	6,951.1
XO	6,951.1	6,952.3
TBGJNT	6,952.3	7,015.8
XO	7,015.8	7,016.9
PRGVLV	7,016.9	7,017.8

PLUG BACK Report Date: 8/22/2003 00:00

Component	Top MD (ft)	Btm MD (ft)
BRP	7,084.0	7,115.6

CONDUCTOR CASING Report Date: 6/11/2003 00:00

Item	OD (in)	Grade	Wt. (ppf)	TopMD (ft)	BtmMD (ft)
CASING JOINT(S)	14.000			23.0	63.0

SURFACE CASING Report Date: 6/15/2003 00:00

Item	OD (in)	Grade	Wt. (ppf)	TopMD (ft)	BtmMD (ft)
CASING JOINT(S)	9.625	K-55	36.00	23.0	1,010.2
	9.625	K-55	36.00	1,010.2	1,010.2
CASING JOINT(S)	9.625	K-55	36.00	1,010.2	1,054.8
GUIDE SHOE	9.625	K-55	36.00	1,054.8	1,056.0

PRODUCTION CASING Report Date: 6/26/2003 00:00

Item	OD (in)	Grade	Wt. (ppf)	TopMD (ft)	BtmMD (ft)
CASING JOINT(S)	7.000	N-80	26.00	23.0	40.0
PUP JOINT	7.000	N-80	26.00	40.0	55.0
CASING JOINT(S)	7.000	N-80	26.00	55.0	7,288.1
FLAG JOINT	7.000	N-80	26.00	7,288.1	7,308.1
CASING JOINT(S)	7.000	N-80	26.00	7,308.1	7,570.9
FLOAT COLLAR	7.000	N-80	26.00	7,570.9	7,572.5
CASING JOINT(S)	7.000	N-80	26.00	7,572.5	7,660.2
FLOAT SHOE	7.000	N-80	26.00	7,660.2	7,662.0

Well: 365X-35S S/T/R: 36/30S/24E

CASING CEMENT DETAIL
- - -
Sfc Csg. Cmt Vol.: 644 cf
Hole Size: 12.25
Top Job: no
Rtns to Sfc: 39 cf
TOC: sfc
- - -

Interm Csg. Cmt Vol.:
Hole Size:
Top Job:
Rtns to Sfc:
TOC:
- - -

Prod. Csg. Cmt Vol.: 1576 cf
Hole Size: 9.875
Top Job: no
Rtns to Sfc: 0
TTOC: 1706 '
- - -

Liner Cmt Vol.:
Hole Size:
Top Job:
Rtns to Sfc:
TOC:
- - -
Top of Formation:
UBA: 7090'
BLW: 7564'

Volume Behind Pipe:
1.3 Yield Assumed
Theoretical Calculations (TTOC)
JEP

OCCIDENTAL OF ELK HILLS INC

366-34S

Event: WELL MAINT - RIG
Event End: 8/15/2007 00:00
Sec. Reason: PIN PART

Ground Level: 814.0ft
Datum: ORIGINAL KB @ 823.00ft (default)
API No.: 0402927665

Wellbore: ORIGINAL HOLE
PBMD: 6,680.0ft
Btm TMD: 7,184.0ft
Spud Date: 7/22/1948 00:00
BH Coord X: 6,149,137.20uss ft
BH Coord Y: 2,288,315.92uss ft

Casing Shoes (ft) | Schematic (9/1/2007) | Openings Top/Btm/Type/Status

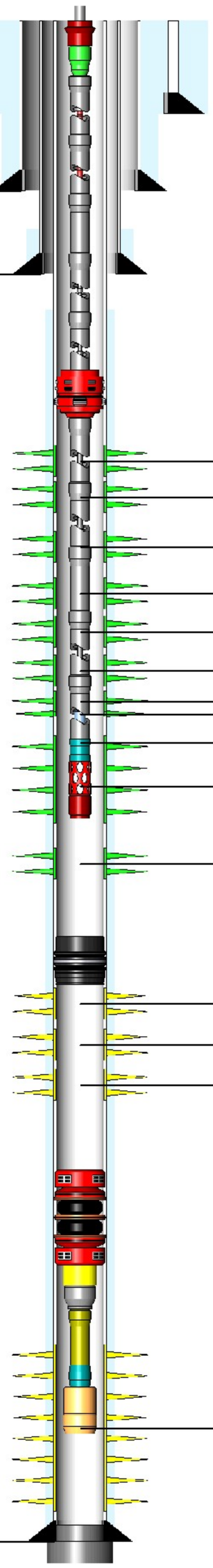

31.0
225.0
3,244.0
7,070.0

6,176.0ft, 6,181.0ft, PERFORATED, OPEN
6,206.0ft, 6,266.0ft, PERFORATED, OPEN
6,348.0ft, 6,359.0ft, PERFORATED, OPEN
6,424.0ft, 6,434.0ft, PERFORATED, OPEN
6,460.0ft, 6,488.0ft, PERFORATED, OPEN
6,506.0ft, 6,512.0ft, PERFORATED, OPEN
6,520.0ft, 6,538.0ft, PERFORATED, OPEN
6,538.0ft, 6,543.0ft, PERFORATED, OPEN
6,564.0ft, 6,569.0ft, PERFORATED, OPEN
6,569.0ft, 6,579.0ft, PERFORATED, OPEN
6,610.0ft, 6,634.0ft, PERFORATED, OPEN
6,692.0ft, 6,768.0ft, PERFORATED, ISOLATE
6,788.0ft, 6,806.0ft, PERFORATED, ISOLATE
6,822.0ft, 6,940.0ft, PERFORATED, ISOLATE
6,960.0ft, 7,015.0ft, PERFORATED, ISOLATE

ROD STRING Report Date: 8/15/2007 00:00

Component	Top MD (ft)	Btm MD (ft)
POLROD	0.0	30.0
PNYROD	30.0	54.0
ROD	54.0	2,484.0
ROD	2,484.0	5,484.0
R-4PER	5,484.0	6,084.0
ROD	6,084.0	6,534.0
RSTBAR	6,534.0	6,538.0
INSPMP	6,538.0	6,562.0

TUBING STRING Report Date: 5/12/2007 00:00

Component	Top MD (ft)	Btm MD (ft)
TH-DBB	9.0	9.6
FATNIP	9.6	11.4
CAS	11.4	5,973.8
AC	5,973.8	5,976.1
CAS	5,976.1	6,568.5
STNIP	6,568.5	6,569.6
PERFJT	6,569.6	6,573.6
STCOLL	6,573.6	6,574.0

PLUG BACK Report Date: 1/12/2005 00:00

Component	Top MD (ft)	Btm MD (ft)
BP-RET	6,680.0	6,682.3

PACKER ASSEMBLY (PERMANENT) Report Date: 2/21/2003 00:00

Component	Top MD (ft)	Btm MD (ft)
PKR-S	6,947.0	6,951.4
MOEXT	6,951.4	6,955.6
XO	6,955.6	6,956.2
PUPJNT	6,956.2	6,962.2
PNIP-O	6,962.2	6,963.6
WLREG	6,963.6	6,964.1

PLUG BACK Report Date: 2/21/1949 00:00

Component	Top MD (ft)	Btm MD (ft)
CEMENT	7,024.0	7,070.0

PLUG BACK Report Date: 2/20/1949 00:00

Component	Top MD (ft)	Btm MD (ft)
CEMENT	7,070.0	7,184.0

CONDUCTOR CASING Report Date: 7/22/1948 00:00

Item	OD (in)	Grade	Wt. (ppf)	TopMD (ft)	BtmMD (ft)
CASING JOINT(S)	26.000			9.0	31.0

SURFACE CASING Report Date: 1/3/1949 00:00

Item	OD (in)	Grade	Wt. (ppf)	TopMD (ft)	BtmMD (ft)
CASING JOINT(S)	16.000	H-40	65.00	9.0	225.0

INTERMEDIATE CASING Report Date: 1/11/1949 00:00

Item	OD (in)	Grade	Wt. (ppf)	TopMD (ft)	BtmMD (ft)
CASING JOINT(S)	10.750	J-55	45.50	9.0	58.0
CASING JOINT(S)	10.750	J-55	40.50	58.0	2,134.0
CASING JOINT(S)	10.750	J-55	45.50	2,134.0	3,244.0

PRODUCTION CASING Report Date: 2/20/1949 00:00

Item	OD (in)	Grade	Wt. (ppf)	TopMD (ft)	BtmMD (ft)
CASING JOINT(S)	7.000	N-80	26.00	9.0	69.0
CASING JOINT(S)	7.000	N-80	23.00	69.0	1,394.0
CASING JOINT(S)	7.000	J-55	23.00	1,394.0	3,113.0
CASING JOINT(S)	7.000	N-80	23.00	3,113.0	5,722.0
CASING JOINT(S)	7.000	N-80	26.00	5,722.0	7,028.0
FLOAT COLLAR	7.000	N-80	26.00	7,028.0	7,028.0
CASING JOINT(S)	7.000	N-80	26.00	7,028.0	7,068.0
FLOAT SHOE	7.000	N-80	26.00	7,068.0	7,070.0

Well: 366-34S S/T/R: 34/30S/24E
Proj#: 22800007
Last Well Status: Active
Status Date: 1-25-2005
Printed: April 2007

CASING CEMENT DETAIL
- - -
Sfc Csg. Cmt Vol.: 827
Hole Size: 22
Top Job: no
Rtns to Sfc: no
TOC: Sfc
- - -

Interm Csg. Cmt Vol.: 903
Hole Size: 15
Top Job: no
Rtns to Sfc: no
TOC: 1565 (TS)
- - -

Prod. Csg. Cmt Vol.: 460
Hole Size: 9.625
Top Job: no
Rtns to Sfc: no
TOC: 4975 (TS)

Liner Cmt Vol.:
Hole Size:
Top Job:
Rtns to Sfc:
TOC:
- - -
Top of Formation:
UBA: 6688'
BLW: 7040'

Volume Behind Pipe:
1.3 Yield Assumed
Theoretical Calculations (TTOC)
RLW

Event: WELL MAINT - RIG
Event End: 12/29/2008 00:00
Sec. Reason: CHANGE SLEEVE
End Status: FINISHED - SUCCESS
Well Classification: DEVELOPMENT

OCCIDENTAL OF ELK HILLS INC

366-35S

Ground Level: 699.0ft
Datum: ORIGINAL KB @ 708.00ft (default)
API No.: 0402927781

Wellbore: ORIGINAL HOLE
PBMD: 6,938.0ft
Btm TMD: 7,574.0ft
Spud Date: 2/1/1951 00:00
BH Coord X: 6,154,370.19uss ft
BH Coord Y: 2,288,226.92uss ft

Casing Shoes (ft) | Schematic (1/1/2009) | Openings Top/Btm/Type/Status

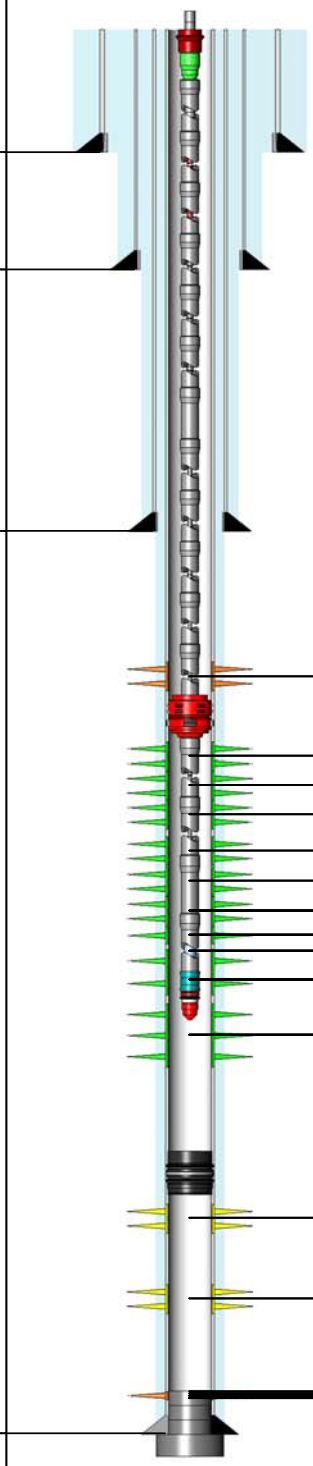

6,310.0ft, 6,311.0ft, PERFORATED, SQU
6,530.0ft, 6,556.0ft, PERFORATED, OPE
6,564.0ft, 6,580.0ft, PERFORATED, OPE
6,584.0ft, 6,590.0ft, PERFORATED, OPE
6,754.0ft, 6,758.0ft, PERFORATED, OPE
6,787.0ft, 6,793.0ft, PERFORATED, OPE
6,810.0ft, 6,822.0ft, PERFORATED, OPE
6,810.0ft, 6,822.0ft, PERFORATED, OPE
6,834.0ft, 6,848.0ft, PERFORATED, OPE
6,834.0ft, 6,848.0ft, PERFORATED, OPE
6,855.0ft, 6,860.0ft, PERFORATED, OPE
6,855.0ft, 6,860.0ft, PERFORATED, OPE
6,874.0ft, 6,884.0ft, PERFORATED, OPE
6,874.0ft, 6,884.0ft, PERFORATED, OPE
6,900.0ft, 6,920.0ft, PERFORATED, OPE
6,900.0ft, 6,920.0ft, PERFORATED, OPE
6,945.0ft, 6,995.0ft, PERFORATED, ISOL
7,005.0ft, 7,015.0ft, PERFORATED, ISOL
7,040.0ft, 7,090.0ft, PERFORATED, SQU
7,110.0ft, 7,155.0ft, PERFORATED, SQU
7,170.0ft, 7,230.0ft, PERFORATED, SQU
7,170.0ft, 7,230.1ft, PERFORATED, SQU
7,250.0ft, 7,310.0ft, PERFORATED, SQU
7,250.0ft, 7,310.1ft, PERFORATED, SQU

ROD STRING Report Date: 12/26/2008 00:00

Component	Top MD (ft)	Btm MD (ft)
POLROD	0.0	36.0
PNYROD	36.0	58.0
ROD	58.0	2,188.0
ROD	2,188.0	4,438.0
ROD	4,438.0	6,838.0
RSTBAR	6,838.0	6,842.0
INSPMP	6,842.0	6,873.0

TUBING STRING Report Date: 7/8/2007 00:00

Component	Top MD (ft)	Btm MD (ft)
TH-DBB	9.0	9.8
FATNIP	9.8	10.4
CAS	10.4	6,414.0
AC	6,414.0	6,416.4
CAS	6,416.4	6,876.5
STNIP	6,876.5	6,877.2
GASANC	6,877.2	6,910.2
BULPLG	6,910.2	6,910.4

PLUG BACK Report Date: 6/29/2007 00:00

Component	Top MD (ft)	Btm MD (ft)
CR-PRM	6,937.0	6,939.5

PLUG BACK Report Date: 5/8/1990 00:00

Component	Top MD (ft)	Btm MD (ft)
CEMENT	7,020.0	7,490.0

PLUG BACK Report Date: 5/4/1987 00:00

Component	Top MD (ft)	Btm MD (ft)
CEMENT	7,490.0	7,525.0

PLUG BACK Report Date: 5/5/1987 00:00

Component	Top MD (ft)	Btm MD (ft)
JUNK	7,490.0	7,525.0

PLUG BACK Report Date: 4/4/1951 00:00

Component	Top MD (ft)	Btm MD (ft)
CEMENT	7,525.0	7,570.0

PLUG BACK Report Date: 4/4/1951 00:00

Component	Top MD (ft)	Btm MD (ft)
CEMENT	7,570.0	7,574.0

CONDUCTOR CASING Report Date: 2/18/1951 00:00

Item	OD (in)	Grade	Wt. (ppf)	TopMD (ft)	BtmMD (ft)
CASING JOINT(S)	26.000			9.0	39.0

SURFACE CASING Report Date: 2/24/1951 00:00

Item	OD (in)	Grade	Wt. (ppf)	TopMD (ft)	BtmMD (ft)
CASING JOINT(S)	16.000	H-40	65.00	9.0	196.0

INTERMEDIATE CASING Report Date: 3/2/1951 00:00

Item	OD (in)	Grade	Wt. (ppf)	TopMD (ft)	BtmMD (ft)
CASING JOINT(S)	10.750	J-55	45.50	9.0	64.0
CASING JOINT(S)	10.750	J-55	40.50	64.0	1,986.0
CASING JOINT(S)	10.750	J-55	45.50	1,986.0	3,188.0
FLOAT COLLAR	10.750	J-55	45.50	3,188.0	3,189.0
FLOAT SHOE	10.750	J-55	45.50	3,189.0	3,190.0

PRODUCTION CASING Report Date: 4/4/1951 00:00

Item	OD (in)	Grade	Wt. (ppf)	TopMD (ft)	BtmMD (ft)
CASING JOINT(S)	7.000	N-80	26.00	9.0	43.0
CASING JOINT(S)	7.000	N-80	23.00	43.0	5,868.0
CASING JOINT(S)	7.000	N-80	26.00	5,868.0	7,568.0
FLOAT COLLAR	7.000	N-80	26.00	7,568.0	7,569.0
FLOAT SHOE	7.000	N-80	26.00	7,569.0	7,570.0

Well: 366-35S S/T/R: 35S/30S/24E

CASING CEMENT DETAIL
- - -
Sfc Csg. Cmt Vol: 450sx
Hole Size: 22.000"
Top Job: No
Rtns to Sfc: Yes
TOC: Yes
- - -

Interm Csg. Cmt Vol: 800sx
Hole Size: 15.000"
Top Job: No
Rtns to Sfc: No
TTOC: 1350' (by Temp Survey)
- - -

Prod. Csg. Cmt Vol: 500sx
Hole Size: 9.625"
Top Job: No
Rtns to Sfc: No
TTOC: 5120' (by Temp Sirvey)
- - -

Liner Cmt Vol.:
Hole Size:
Top Job:
Rtns to Sfc:
TTOC:
- - -
Top of Formation:
UBA: 7019'
BLW: 7516'

Volume Behind Pipe:
1.3 Yield Assumed
Theoretical Calculations (TTOC)

OCCIDENTAL OF ELK HILLS INC

366X-34S

Event: WELL MAINT - RIG
Event End: 5/20/2009 00:00
Sec. Reason: PUMP SHOE LEAKING
End Status: FINISHED - SUCCESS
Well Classification: DEVELOPMENT - CLASS III

Water Depth: 805.8ft
Datum: ORIGINAL KB @ 828.80ft (default)
API No.: 0403031793

Wellbore: ST 1
PBMD: 6,280.0ft
Btm TMD: 7,605.0ft
Spud Date: 11/28/2006 18:00
BH Coord X: 6,150,035.99uss ft
BH Coord Y: 2,289,313.95uss ft

Casing Shoes (ft)	Schematic (5/20/2009)	Openings Top/Btm/Type/Status

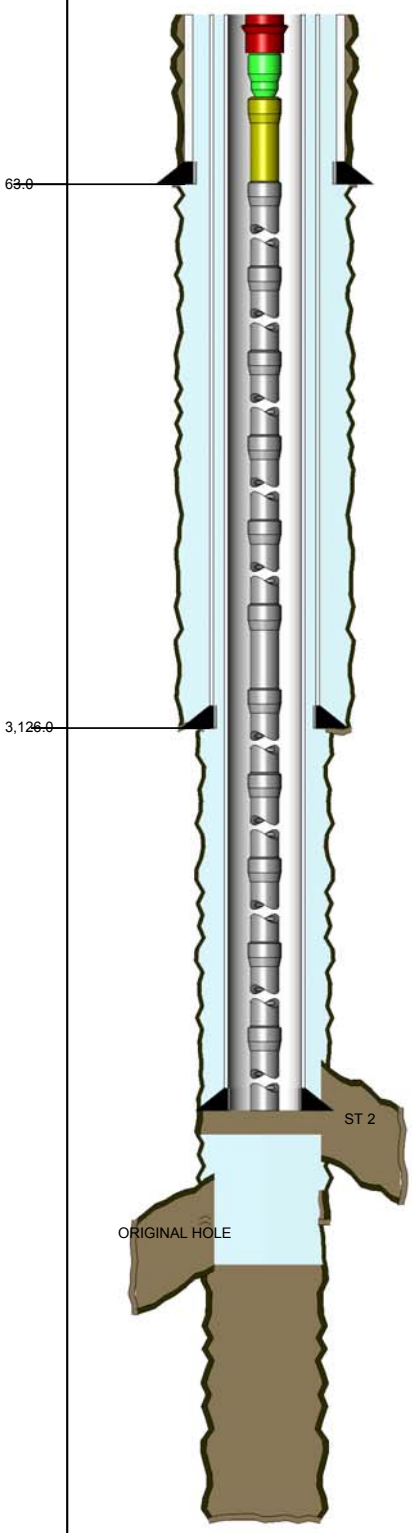

ROD STRING Report Date: 5/20/2009 00:00

Component	Top MD (ft)	Btm MD (ft)
POLRDL	0.0	36.0
PNYROD	36.0	58.0
R-4PER	58.0	148.0
COROD	148.0	3,729.0
COROD	3,729.0	7,229.0
RSTBAR	7,229.0	7,233.0
ON-OFF	7,233.0	7,234.0
RSTBAR	7,234.0	7,238.0
R-4PER	7,238.0	7,298.0
INSPMP	7,298.0	7,328.0

TUBING STRING Report Date: 5/12/2009 00:00

Component	Top MD (ft)	Btm MD (ft)
TH-DBB	23.0	31.4
FATNIP	31.4	32.0
PUPJNT	32.0	40.1
CAS	40.1	5,934.4
AC	5,934.4	5,936.8
CAS	5,936.8	7,402.4
PMPSH	7,402.4	7,403.0
CAS	7,403.0	7,434.6
STCOLL	7,434.6	7,435.1

CONDUCTOR CASING Report Date: 11/13/2006 00:00

Item	OD (in)	Grade	Wt. (ppf)	TopMD (ft)	BtmMD (ft)
CASING JOINT(S)	14.000			23.0	63.0

SURFACE CASING Report Date: 12/2/2006 00:00

Item	OD (in)	Grade	Wt. (ppf)	TopMD (ft)	BtmMD (ft)
CASING JOINT(S)	9.625	J-55	36.00	23.0	3,087.0
CASING FLOAT COLLAR	9.625	J-55	36.00	3,087.0	3,087.0
CASING JOINT(S)	9.625	J-55	36.00	3,087.0	3,125.1
GUIDE SHOE	9.625	J-55	36.00	3,125.1	3,126.0

INTERMEDIATE CASING Report Date: 1/5/2007 00:00

Item	OD (in)	Grade	Wt. (ppf)	TopMD (ft)	BtmMD (ft)
CASING JOINT(S)	7.000	J-55	23.00	23.0	2,571.3
CASING JOINT(S)	7.000	N-80	26.00	2,571.3	5,050.9
FLAG JOINT	7.000	N-80	26.00	5,050.9	5,070.9
CASING JOINT(S)	7.000	N-80	26.00	5,070.9	6,230.0
CASING FLOAT COLLAR	7.000	N-80	26.00	6,230.0	6,230.9
CASING JOINT(S)	7.000	N-80	26.00	6,230.9	6,311.3
CASING FLOAT COLLAR	7.000	N-80	26.00	6,311.3	6,312.8
CASING GUIDE SHOE	7.000	N-80	26.00	6,312.8	6,315.0

Well: 366X-34S-ST1 S/T/R: 34S/30S/24E

CASING CEMENT DETAIL
- - -
Sfc Csg. Cmt Vol.: 2065 cf
Hole Size: 12-1/4" (9-5/8" Casing)
Top Job: YES
Rtns to Sfc: NO
TTOC: Surface
- - -

Interm Csg. Cmt Vol.: NONE
Hole Size:
Top Job:
Rtns to Sfc:
TTOC:
- - -

Prod. Csg. Cmt Vol.: 2027 cf
Hole Size: 8-3/4" (7" Casing)
Top Job: NO
Rtns to Sfc: NO
TTOC: Surface
- - -

Liner Cmt Vol.: 439 cf
Hole Size: 6-1/8" (5-1/2" Casing)
Top Job: NO
Rtns to Sfc: NO
TTOC: Surface
- - -
Top of Formation:
UBA: NA
BLW: NA

Volume Behind Pipe:
1.3 Yield Assumed
Theoretical Calculations (TTOC)

OCCIDENTAL OF ELK HILLS INC

366X-34S

Event: WELL MAINT - RIG
Event End: 5/20/2009 00:00
Sec. Reason: PUMP SHOE LEAKING
End Status: FINISHED - SUCCESS
Well Classification: DEVELOPMENT - CLASS III

Water Depth: 805.8ft
Datum: ORIGINAL KB @ 828.80ft (default)
API No.: 0403031793

Wellbore: ST 1
PBMD: 6,280.0ft
Btm TMD: 7,605.0ft
Spud Date: 11/28/2006 18:00
BH Coord X: 6,150,035.99uss ft
BH Coord Y: 2,289,313.95uss ft

Casing Shoes (ft)	Schematic (5/20/2009)	Openings Top/Btm/Type/Status

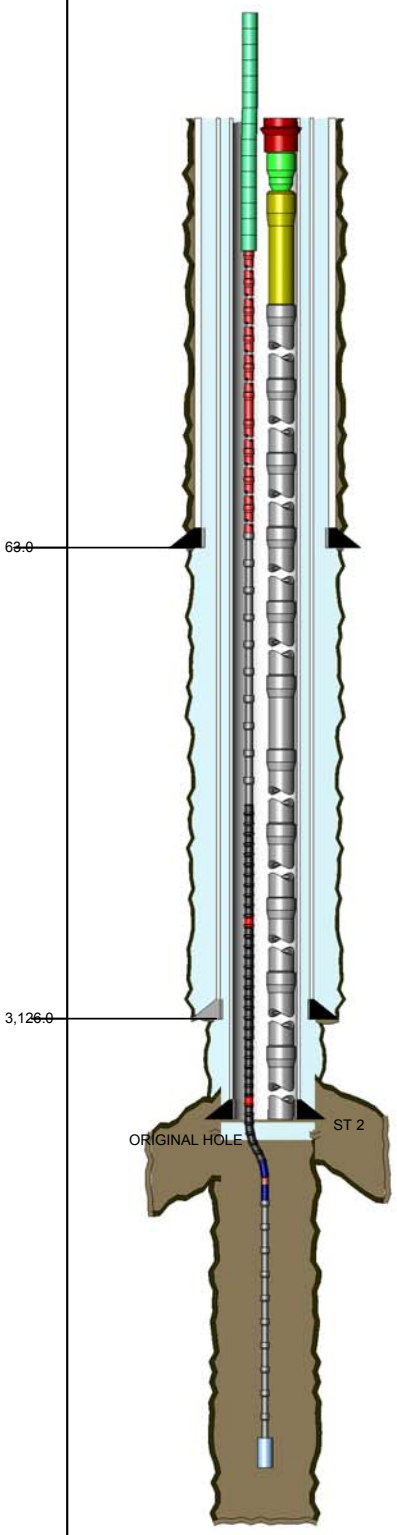

ROD STRING — Report Date: 5/20/2009 00:00

Component	Top MD (ft)	Btm MD (ft)
POLRDL	0.0	36.0
PNYROD	36.0	58.0
R-4PER	58.0	148.0
COROD	148.0	3,729.0
COROD	3,729.0	7,229.0
RSTBAR	7,229.0	7,233.0
ON-OFF	7,233.0	7,234.0
RSTBAR	7,234.0	7,238.0
R-4PER	7,238.0	7,298.0
INSPMP	7,298.0	7,328.0

TUBING STRING — Report Date: 5/12/2009 00:00

Component	Top MD (ft)	Btm MD (ft)
TH-DBB	23.0	31.4
FATNIP	31.4	32.0
PUPJNT	32.0	40.1
CAS	40.1	5,934.4
AC	5,934.4	5,936.8
CAS	5,936.8	7,402.4
PMPSH	7,402.4	7,403.0
CAS	7,403.0	7,434.6
STCOLL	7,434.6	7,435.1

CONDUCTOR CASING — Report Date: 11/13/2006 00:00

Item	OD (in)	Grade	Wt. (ppf)	TopMD (ft)	BtmMD (ft)
CASING JOINT(S)	14.000			23.0	63.0

SURFACE CASING — Report Date: 12/2/2006 00:00

Item	OD (in)	Grade	Wt. (ppf)	TopMD (ft)	BtmMD (ft)
CASING JOINT(S)	9.625	J-55	36.00	23.0	3,087.0
CASING FLOAT COLLAR	9.625	J-55	36.00	3,087.0	3,087.0
CASING JOINT(S)	9.625	J-55	36.00	3,087.0	3,125.1
GUIDE SHOE	9.625	J-55	36.00	3,125.1	3,126.0

INTERMEDIATE CASING — Report Date: 1/5/2007 00:00

Item	OD (in)	Grade	Wt. (ppf)	TopMD (ft)	BtmMD (ft)
CASING JOINT(S)	7.000	J-55	23.00	23.0	2,571.3
CASING JOINT(S)	7.000	N-80	26.00	2,571.3	5,050.9
FLAG JOINT	7.000	N-80	26.00	5,050.9	5,070.9
CASING JOINT(S)	7.000	N-80	26.00	5,070.9	6,230.0
CASING FLOAT COLLAR	7.000	N-80	26.00	6,230.0	6,230.9
CASING JOINT(S)	7.000	N-80	26.00	6,230.9	6,311.3
CASING FLOAT COLLAR	7.000	N-80	26.00	6,311.3	6,312.8
CASING GUIDE SHOE	7.000	N-80	26.00	6,312.8	6,315.0

Well: 366X-34S-ST1 S/T/R: 34S/30S/24E

CASING CEMENT DETAIL
- - -
Sfc Csg. Cmt Vol.: 2065 cf
Hole Size: 12-1/4" (9-5/8" Casing)
Top Job: YES
Rtns to Sfc: NO
TTOC: Surface
- - -

Interm Csg. Cmt Vol.: NONE
Hole Size:
Top Job:
Rtns to Sfc:
TTOC:
- - -

Prod. Csg. Cmt Vol.: 2027 cf
Hole Size: 8-3/4" (7" Casing)
Top Job: NO
Rtns to Sfc: NO
TTOC: Surface
- - -

Liner Cmt Vol.: 439 cf
Hole Size: 6-1/8" (5-1/2" Casing)
Top Job: NO
Rtns to Sfc: NO
TTOC: Surface
- - -
Top of Formation:
UBA: NA
BLW: NA

Volume Behind Pipe:
1.3 Yield Assumed
Theoretical Calculations (TTOC)

OCCIDENTAL OF ELK HILLS INC

366X-34S

Event: WELL MAINT - RIG
Event End: 5/20/2009 00:00
Sec. Reason: PUMP SHOE LEAKING
End Status: FINISHED - SUCCESS
Well Classification: DEVELOPMENT - CLASS III

Water Depth: 805.8ft
Datum: ORIGINAL KB @ 828.80ft (default)
API No.: 0403031793

Wellbore: ST 2
PBMD: 7,514.0ft
Btm TMD: 7,605.0ft
Spud Date: 11/28/2006 18:00
BH Coord X: 6,150,035.99uss ft
BH Coord Y: 2,289,313.95uss ft

Casing Shoes (ft)	Schematic (5/20/2009)	Openings Top/Btm/Type/Status

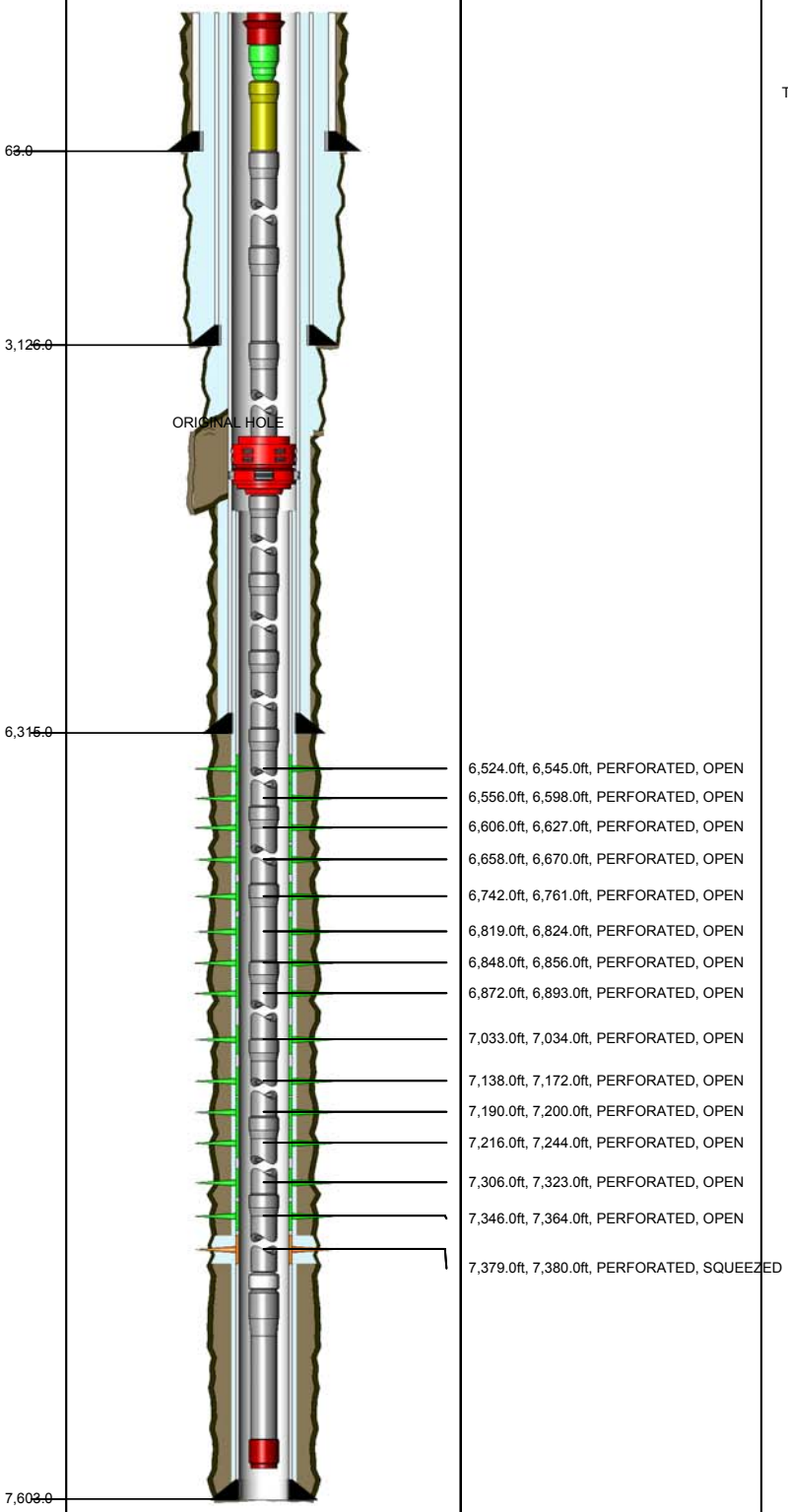

ROD STRING — Report Date: 5/20/2009 00:00

Component	Top MD (ft)	Btm MD (ft)
POLRDL	0.0	36.0
PNYROD	36.0	58.0
R-4PER	58.0	148.0
COROD	148.0	3,729.0
COROD	3,729.0	7,229.0
RSTBAR	7,229.0	7,233.0
ON-OFF	7,233.0	7,234.0
RSTBAR	7,234.0	7,238.0
R-4PER	7,238.0	7,298.0
INSPMP	7,298.0	7,328.0

TUBING STRING — Report Date: 5/12/2009 00:00

Component	Top MD (ft)	Btm MD (ft)
TH-DBB	23.0	31.4
FATNIP	31.4	32.0
PUPJNT	32.0	40.1
CAS	40.1	5,934.4
AC	5,934.4	5,936.8
CAS	5,936.8	7,402.4
PMPSH	7,402.4	7,403.0
CAS	7,403.0	7,434.6
STCOLL	7,434.6	7,435.1

CONDUCTOR CASING — Report Date: 11/13/2006 00:00

Item	OD (in)	Grade	Wt. (ppf)	TopMD (ft)	BtmMD (ft)
CASING JOINT(S)	14.000			23.0	63.0

SURFACE CASING — Report Date: 12/2/2006 00:00

Item	OD (in)	Grade	Wt. (ppf)	TopMD (ft)	BtmMD (ft)
CASING JOINT(S)	9.625	J-55	36.00	23.0	3,087.0
CASING FLOAT COLLAR	9.625	J-55	36.00	3,087.0	3,087.0
CASING JOINT(S)	9.625	J-55	36.00	3,087.0	3,125.1
GUIDE SHOE	9.625	J-55	36.00	3,125.1	3,126.0

INTERMEDIATE CASING — Report Date: 1/5/2007 00:00

Item	OD (in)	Grade	Wt. (ppf)	TopMD (ft)	BtmMD (ft)
CASING JOINT(S)	7.000	J-55	23.00	23.0	2,571.3
CASING JOINT(S)	7.000	N-80	26.00	2,571.3	5,050.9
FLAG JOINT	7.000	N-80	26.00	5,050.9	5,070.9
CASING JOINT(S)	7.000	N-80	26.00	5,070.9	6,230.0
CASING FLOAT COLLAR	7.000	N-80	26.00	6,230.0	6,230.9
CASING JOINT(S)	7.000	N-80	26.00	6,230.9	6,311.3
CASING FLOAT COLLAR	7.000	N-80	26.00	6,311.3	6,312.8
CASING GUIDE SHOE	7.000	N-80	26.00	6,312.8	6,315.0

PRODUCTION LINER — Report Date: 1/8/2007 00:00

Item	OD (in)	Grade	Wt. (ppf)	TopMD (ft)	BtmMD (ft)
	5.500		0.00	6,095.0	6,113.2
CASING JOINT(S)	5.500	N-80	17.00	6,113.2	7,514.0
FLOAT COLLAR	5.500	N-80	17.00	7,514.0	7,515.1
CASING JOINT(S)	5.500	N-80	17.00	7,515.1	7,601.2
FLOAT SHOE	5.500	N-80	17.00	7,601.2	7,603.0

Well: 366X-34S-RD2 S/T/R: 34S/30S/24E

CASING CEMENT DETAIL
- - -
Sfc Csg. Cmt Vol.: 2065 cf
Hole Size: 12-1/4" (9-5/8" Casing)
Top Job: YES
Rtns to Sfc: NO
TTOC: Surface
- - -

Interm Csg. Cmt Vol.: 2027 cf
Hole Size: 8-3/4" (7" Casing)
Top Job: NO
Rtns to Sfc: NO
TTOC: Surface
- - -

Prod. Csg. Cmt Vol.: NONE
Hole Size:
Top Job:
Rtns to Sfc:
TTOC:
- - -

Liner Cmt Vol.: 439 cf
Hole Size: 6-1/8" (5-1/2" Casing)
Top Job: NO
Rtns to Sfc: NO
TTOC: Surface
- - -
Top of Formation:
UBA: NA
BLW: NA

Volume Behind Pipe:
1.3 Yield Assumed
Theoretical Calculations (TTOC)

OCCIDENTAL OF ELK HILLS INC

367-33S

Event: WELL MAINT - RIG
Event End: 9/8/2007 00:00
Sec. Reason:
End Status: FINISHED - SUCCESS
Well Classification: DEVELOPMENT

Ground Level: 1,013.1ft
Datum: ORIGINAL KB @ 1,034.10ft (default)
API No.: 0403013359

Wellbore: ST1
PBMD: 7,165.0ft
Btm TMD: 7,315.0ft
Spud Date: 7/24/1999 00:00
BH Coord X: 6,143,943.12uss ft
BH Coord Y: 2,287,439.15uss ft

Casing Shoes (ft) | Schematic (9/8/2007) | Openings Top/Btm/Type/Status

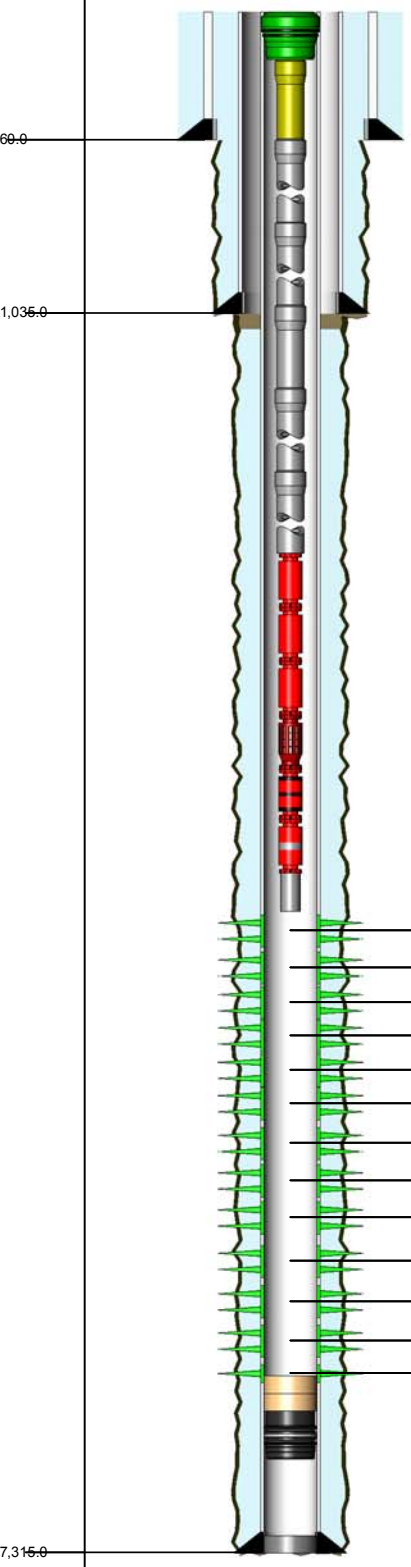

6,704.0ft, 6,777.0ft, PERFORATED, OPEN
6,802.0ft, 6,814.0ft, PERFORATED, OPEN
6,826.0ft, 6,864.0ft, PERFORATED, OPEN
6,868.0ft, 6,884.0ft, PERFORATED, OPEN
6,893.0ft, 6,920.0ft, PERFORATED, OPEN
6,924.0ft, 6,938.0ft, PERFORATED, OPEN
6,965.0ft, 7,014.0ft, PERFORATED, OPEN
7,028.0ft, 7,038.0ft, PERFORATED, OPEN
7,050.0ft, 7,060.0ft, PERFORATED, OPEN
7,086.0ft, 7,094.0ft, PERFORATED, OPEN
7,111.0ft, 7,124.0ft, PERFORATED, OPEN
7,135.0ft, 7,145.0ft, PERFORATED, OPEN
7,153.0ft, 7,172.0ft, PERFORATED, OPEN

TUBING STRING — Report Date: 9/6/2007 00:00

Component	Top MD (ft)	Btm MD (ft)
TH-D	21.0	21.6
PUPJNT	21.6	29.7
CAS	29.7	6,584.3
ESPPMP	6,584.3	6,601.1
ESPPMP	6,601.1	6,622.9
ESPPMP	6,622.9	6,644.6
ESPINT	6,644.6	6,647.9
ESPPRT	6,647.9	6,656.6
ESPMTR	6,656.6	6,680.3
ESPSEN	6,680.3	6,682.1

LINER — Report Date: 4/18/2003 00:00

Component	Top MD (ft)	Btm MD (ft)
FILL	7,165.0	7,184.0

PLUG BACK — Report Date: 8/4/2001 00:00

Component	Top MD (ft)	Btm MD (ft)
FILL	7,184.0	7,188.0

PLUG BACK — Report Date: 10/22/1999 00:00

Component	Top MD (ft)	Btm MD (ft)
BP-DR	7,188.0	7,191.0

PLUG BACK — Report Date: 8/8/1999 00:00

Component	Top MD (ft)	Btm MD (ft)
CEMENT	7,221.0	7,315.0

CONDUCTOR CASING — Report Date: 7/20/1999 00:00

Item	OD (in)	Grade	Wt. (ppf)	TopMD (ft)	BtmMD (ft)
CASING JOINT(S)	16.000			21.0	60.0

SURFACE CASING — Report Date: 7/23/1999 00:00

Item	OD (in)	Grade	Wt. (ppf)	TopMD (ft)	BtmMD (ft)
CASING JOINT(S)	9.625	J-55	36.00	21.0	990.1
	9.625			990.1	990.1
CASING JOINT(S)	9.625	J-55	36.00	990.1	1,033.5
GUIDE SHOE	9.625			1,033.5	1,035.0

PRODUCTION CASING — Report Date: 8/8/1999 00:00

Item	OD (in)	Grade	Wt. (ppf)	TopMD (ft)	BtmMD (ft)
CASING JOINT(S)	5.500	N-80	17.00	21.0	7,221.0
FLOAT COLLAR	5.500	N-80	17.00	7,221.0	7,223.0
CASING JOINT(S)	5.500	N-80	17.00	7,223.0	7,314.0
FLOAT SHOE	5.500	N-80	17.00	7,314.0	7,315.0

Well: 367-33S S/T/R: 33S/30S/24E

CASING CEMENT DETAIL
- - -
Sfc Csg. Cmt Vol.: 568 cf
Hole Size: 12.25'
Top Job: no
Rtns to Sfc: yes
TOC: sfc
- - -

Interm Csg. Cmt Vol.:
Hole Size:
Top Job:
Rtns to Sfc:
TOC:
- - -

Prod. Csg. Cmt Vol.: 1705 cf
Hole Size: 8.5'
Top Job:
Rtns to Sfc: no
TTOC: sfc
- - -

Liner Cmt Vol.:
Hole Size:
Top Job:
Rtns to Sfc :
TTOC:
- - -
Top of Formation:
UBA: 6701'
BLW: 7265'

Volume Behind Pipe:
1.3 Yield Assumed
Theoretical Calculations (TTOC)

OCCIDENTAL OF ELK HILLS INC

367-34S

Event: WELL ENHANCEMENT
Event End: 8/9/2008 00:00
Sec. Reason:

Ground Level: 836.0ft
Datum: ORIGINAL KB @ 857.00ft (default)
API No.: 0402984219

Wellbore: ORIGINAL HOLE
PBMD: 7,364.0ft
Btm TMD: 7,464.0ft
Spud Date: 8/1/1989 00:00
BH Coord X: 6,149,169.33uss ft
BH Coord Y: 2,287,690.78uss ft

Casing Shoes (ft) | Schematic (9/1/2008) | Openings Top/Btm/Type/Status

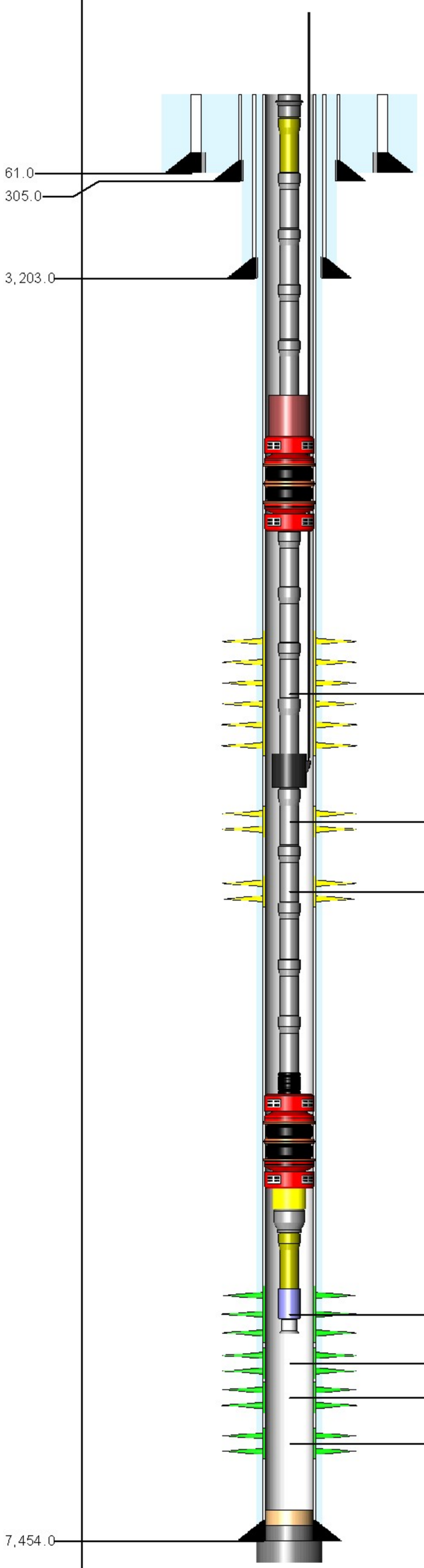

PACKER

6,758.0ft, 6,828.0ft, PERFORATED, ISOLATE

6,849.0ft, 6,885.0ft, PERFORATED, ISOLATE

6,905.0ft, 6,985.0ft, PERFORATED, ISOLATE

7,010.0ft, 7,045.0ft, PERFORATED, OPEN

7,066.0ft, 7,113.0ft, PERFORATED, OPEN

7,124.0ft, 7,134.0ft, PERFORATED, OPEN

7,180.0ft, 7,210.0ft, PERFORATED, OPEN

TUBING STRING Report Date: 4/2/2002 00:00

Component	Top MD (ft)	Btm MD (ft)
TH-SGL	21.0	21.6
PUPJNT	21.6	49.7
TBGJNT	49.7	6,695.7
ON-OFF	6,695.7	6,697.1
PKR-S	6,697.1	6,701.3
TBGJNT	6,701.3	6,827.2
INJM-D	6,827.2	6,836.4
TBGJNT	6,836.4	6,991.0
SA	6,991.0	6,995.0

PACKER ASSEMBLY (PERMANENT) Report Date: 4/1/2002 00:00

Component	Top MD (ft)	Btm MD (ft)
PKR-S	6,995.0	6,999.4
MOEXT	6,999.4	7,003.6
XO	7,003.6	7,004.1
PUPJNT	7,004.1	7,010.2
NOGO-O	7,010.2	7,011.7
BELCOL	7,011.7	7,012.1

PLUG BACK Report Date: 8/4/2003 00:00

Component	Top MD (ft)	Btm MD (ft)
FILL	7,336.0	7,364.0

PLUG BACK Report Date: 9/17/1989 00:00

Component	Top MD (ft)	Btm MD (ft)
CEMENT	7,364.0	7,454.0

PLUG BACK Report Date: 9/17/1989 00:00

Component	Top MD (ft)	Btm MD (ft)
CEMENT	7,454.0	7,464.0

CONDUCTOR CASING Report Date: 8/15/1989 00:00

Item	OD (in)	Grade	Wt. (ppf)	TopMD (ft)	BtmMD (ft)
CASING JOINT(S)	26.000			21.0	61.0

SURFACE CASING Report Date: 8/16/1989 00:00

Item	OD (in)	Grade	Wt. (ppf)	TopMD (ft)	BtmMD (ft)
CASING JOINT(S)	13.375	H-40	48.00	21.0	305.0

INTERMEDIATE CASING Report Date: 8/17/1989 00:00

Item	OD (in)	Grade	Wt. (ppf)	TopMD (ft)	BtmMD (ft)
CASING JOINT(S)	9.625	K-55	40.00	21.0	3,203.0

PRODUCTION CASING Report Date: 9/17/1989 00:00

Item	OD (in)	Grade	Wt. (ppf)	TopMD (ft)	BtmMD (ft)
CASING JOINT(S)	7.000	N-80	23.00	21.0	1,075.0
CASING JOINT(S)	7.000	K-55	23.00	1,075.0	5,262.0
CASING JOINT(S)	7.000	K-55	26.00	5,262.0	5,939.0
CASING JOINT(S)	7.000	N-80	29.00	5,939.0	7,364.0
FLOAT COLLAR	7.000	N-80	29.00	7,364.0	7,365.8
CASING JOINT(S)	7.000	N-80	29.00	7,365.8	7,451.6
FLOAT SHOE	7.000	N-80	29.00	7,451.6	7,454.0

Well: 367-34S S/T/R: 34/30S/24E

CASING CEMENT DETAIL
- - -
Sfc Csg. Cmt Vol.: 500 cf
Hole Size: 17.5
Top Job: no
Rtns to Sfc: 95 cf
TOC: sfc
- - -

Interm Csg. Cmt Vol.: 1425 cf
Hole Size: 12.25
Top Job: no
Rtns to Sfc: 60 cf
TOC: sfc
- - -

Prod. Csg. Cmt Vol.: 2000 cf
Hole Size: 8.75
Top Job: no
Rtns to Sfc: 20 cf
TOC: sfc

Liner Cmt Vol.:
Hole Size:
Top Job:
Rtns to Sfc:
TOC:
- - -
Top of Formation:
UBA: 6757'
BLW: 7160'

Volume Behind Pipe:
1.3 Yield Assumed
Theoretical Calculations (TTOC)
JEP

OCCIDENTAL OF ELK HILLS INC

367X-33S

Event: WELL ENHANCEMENT
Event End: 12/7/2006 00:00
Sec. Reason:

Ground Level: 978.0ft
Datum: ORIGINAL KB @ 998.00ft (default)
API No.: 0402989733

Wellbore: ORIGINAL HOLE
PBMD: 5,940.0ft
Btm TMD: 7,348.0ft
Spud Date: 3/6/1992 00:00
BH Coord X: 6,143,619.50uss ft
BH Coord Y: 2,287,740.60uss ft

Casing Shoes (ft) | Schematic (12/7/2006) | Openings Top/Btm/Type/Status

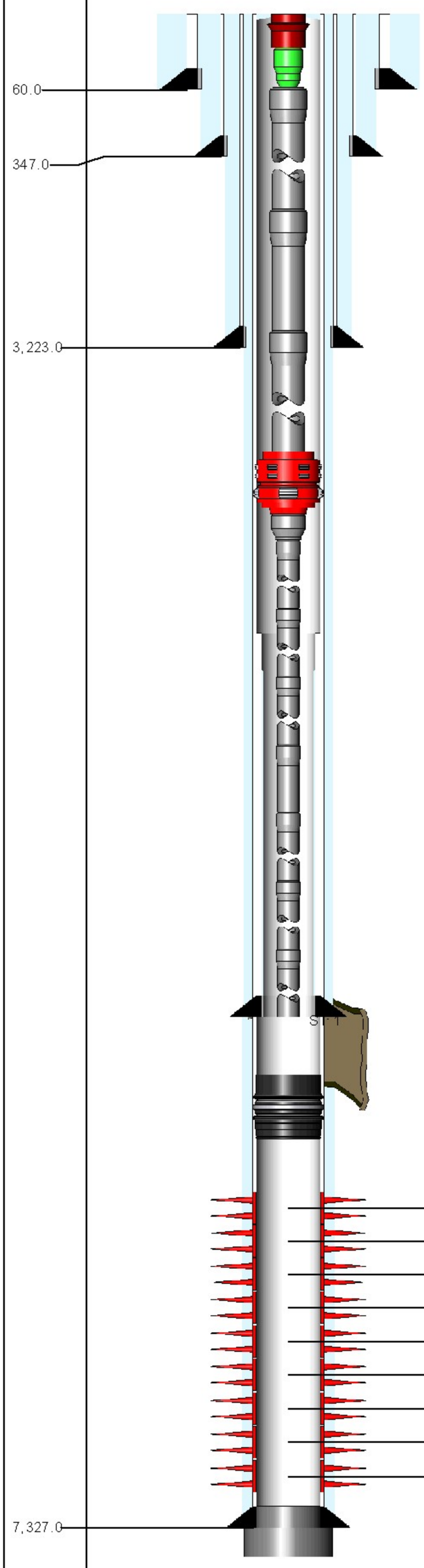

6,662.0ft, 6,742.0ft, PERFORATED, ABAN
6,762.0ft, 6,830.0ft, PERFORATED, ABAN
6,850.0ft, 6,900.0ft, PERFORATED, ABAN
6,920.0ft, 6,935.0ft, PERFORATED, ABAN
6,955.0ft, 7,000.0ft, PERFORATED, ABAN
7,015.0ft, 7,035.0ft, PERFORATED, ABAN
7,055.0ft, 7,065.0ft, PERFORATED, ABAN
7,080.0ft, 7,115.0ft, PERFORATED, ABAN
7,130.0ft, 7,150.0ft, PERFORATED, ABAN

ROD STRING Report Date: 12/6/2006 00:00

Component	Top MD (ft)	Btm MD (ft)
POLROD	0.0	36.0
PNYROD	36.0	42.0
ROD	42.0	2,262.0
ROD	2,262.0	6,432.0
INSPMP	6,432.0	6,462.0

TUBING STRING Report Date: 12/5/2006 00:00

Component	Top MD (ft)	Btm MD (ft)
TH-DBB	20.0	20.6
FATNIP	20.6	21.3
CAS	21.3	5,395.2
AC	5,395.2	5,397.6
XO	5,397.6	5,398.7
CAS	5,398.7	6,459.0
STNIP	6,459.0	6,460.1
PMPJKT	6,460.1	6,491.2

PLUG BACK Report Date: 8/21/2000 00:00

Component	Top MD (ft)	Btm MD (ft)
BP-DR	5,940.0	5,941.5

PLUG BACK Report Date: 8/19/1992 00:00

Component	Top MD (ft)	Btm MD (ft)
PLUGBK	7,234.0	7,327.0

PLUG BACK Report Date: 4/1/1992 00:00

Component	Top MD (ft)	Btm MD (ft)
CEMENT	7,327.0	7,340.0

CONDUCTOR CASING Report Date: 3/6/1992 00:00

Item	OD (in)	Grade	Wt. (ppf)	TopMD (ft)	BtmMD (ft)
CASING JOINT(S)	20.000			20.0	60.0

SURFACE CASING Report Date: 3/14/1992 00:00

Item	OD (in)	Grade	Wt. (ppf)	TopMD (ft)	BtmMD (ft)
CASING JOINT(S)	13.375	H-40	48.00	20.0	345.5
GUIDE SHOE	13.375	H-40	48.00	345.5	347.0

INTERMEDIATE CASING Report Date: 3/19/1992 00:00

Item	OD (in)	Grade	Wt. (ppf)	TopMD (ft)	BtmMD (ft)
CASING JOINT(S)	9.625	K-55	40.00	20.0	3,222.0
GUIDE SHOE	9.625	K-55	40.00	3,222.0	3,223.0

PRODUCTION CASING Report Date: 4/1/1992 00:00

Item	OD (in)	Grade	Wt. (ppf)	TopMD (ft)	BtmMD (ft)
CASING JOINT(S)	7.000	N-80	26.00	20.0	431.9
CASING JOINT(S)	7.000	K-55	26.00	431.9	1,331.1
CASING JOINT(S)	7.000	K-55	23.00	1,331.1	4,567.7
CASING JOINT(S)	7.000	K-55	26.00	4,567.7	6,340.1
FLAG JOINT	7.000	K-55	26.00	6,340.1	6,365.5
CASING JOINT(S)	7.000	N-80	26.00	6,365.5	7,234.0
FLOAT COLLAR	7.000	N-80	26.00	7,234.0	7,235.7
CASING JOINT(S)	7.000	N-80	26.00	7,235.7	7,324.8
FLOAT SHOE	7.000	N-80	26.00	7,324.8	7,327.0

LINER Report Date: 8/31/2000 00:00

Item	OD (in)	Grade	Wt. (ppf)	TopMD (ft)	BtmMD (ft)
PBR	6.276			5,696.3	5,697.3
LINER HANGER PACKER	6.276			5,697.3	5,706.2
LINER TIEBACK SEAL ASSEMBLY	6.276			5,706.2	5,708.0
LINER HANGER	6.276			5,708.0	5,714.5
CROSSOVER	6.276			5,714.5	5,718.2
CASING JOINT(S)	5.000	N-80	15.00	5,718.2	7,252.3
LANDING COLLAR	5.000			7,252.3	7,252.3
CASING JOINT(S)	5.000	N-80	15.00	7,252.3	7,299.3
	5.000			7,299.3	7,299.3
CASING JOINT(S)	5.000	N-80	15.00	7,299.3	7,346.4
GUIDE SHOE	5.000			7,346.4	7,347.0

Well: 367X-33S S/T/R: 33S/30S/24E

CASING CEMENT DETAIL
- - -
Sfc Csg. Cmt Vol.: 500 cf
Hole Size: 17.5"
Top Job: Yes
Rtns to Sfc: 40 cf
TOC: Sfc
- - -

Interm Csg. Cmt Vol.: 1650 cf
Hole Size: 12.25"
Top Job: No
Rtns to Sfc: 95 cf
TOC: Sfc
- - -

Prod. Csg. Cmt Vol.: 1800 cf
Hole Size: 8.75"
Top Job: No
Rtns to Sfc:
TTOC: Sfc

RD Liner Cmt Vol.: 149.5 cf
Hole Size: 6.125"
Top Job: No
Rtns to Sfc: No
TTOC: TOL
- - -
Top of Formation:
UBA: 6661'
BLW: 7180'

Volume Behind Pipe:
1.3 Yield Assumed
Theoretical Calculations (TTOC)

OCCIDENTAL OF ELK HILLS INC

367X-33S

Event: WELL ENHANCEMENT
Event End: 12/7/2006 00:00
Sec. Reason:

Ground Level: 978.0ft
Datum: ORIGINAL KB @ 998.00ft (default)
API No.: 0402989733

Wellbore: ST 1
PBMD: 6,530.0ft
Btm TMD: 7,350.0ft
Spud Date: 3/6/1992 00:00
BH Coord X: 6,144,052.21uss ft
BH Coord Y: 2,288,047.92uss ft

Casing Shoes (ft) | Schematic (12/7/2006) | Openings Top/Btm/Type/Status

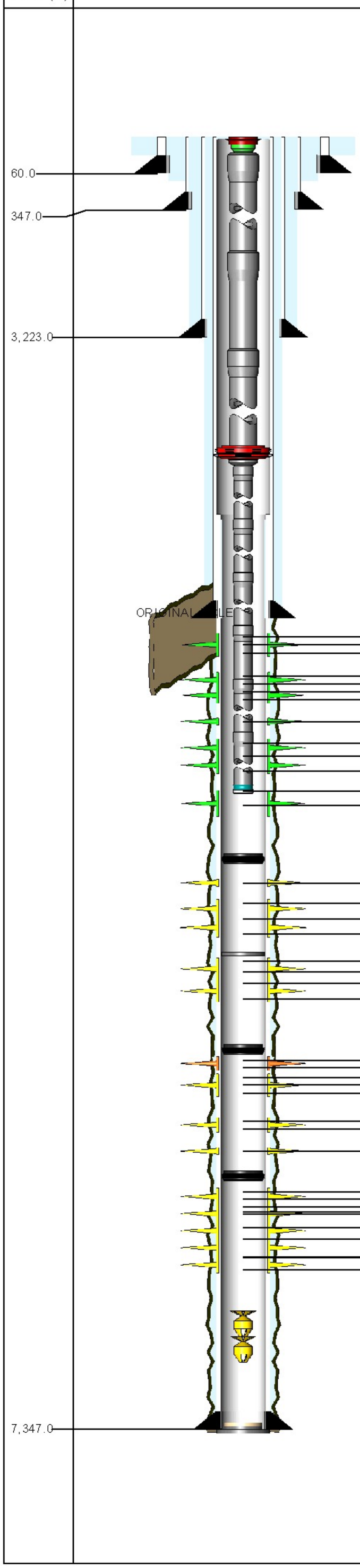

6,019.0ft, 6,022.0ft, PERFORATED, OPEN
6,028.0ft, 6,030.0ft, PERFORATED, OPEN
6,038.0ft, 6,040.0ft, PERFORATED, OPEN
6,132.0ft, 6,140.0ft, PERFORATED, OPEN
6,146.0ft, 6,150.0ft, PERFORATED, OPEN
6,154.0ft, 6,164.0ft, PERFORATED, OPEN
6,170.0ft, 6,204.0ft, PERFORATED, OPEN
6,275.0ft, 6,280.0ft, PERFORATED, OPEN
6,346.0ft, 6,362.0ft, PERFORATED, OPEN
6,388.0ft, 6,400.0ft, PERFORATED, OPEN
6,424.0ft, 6,440.0ft, PERFORATED, OPEN
6,467.0ft, 6,472.0ft, PERFORATED, OPEN
6,490.0ft, 6,506.0ft, PERFORATED, OPEN
6,554.0ft, 6,559.0ft, PERFORATED, ISOLA
6,575.0ft, 6,578.0ft, PERFORATED, ISOLA
6,588.0ft, 6,592.0ft, PERFORATED, ISOLA
6,600.0ft, 6,610.0ft, PERFORATED, ISOLA
6,619.0ft, 6,640.0ft, PERFORATED, ISOLA
6,643.0ft, 6,647.0ft, PERFORATED, ISOLA
6,650.0ft, 6,656.0ft, PERFORATED, ISOLA
6,661.0ft, 6,666.0ft, PERFORATED, ISOLA
6,698.0ft, 6,706.0ft, PERFORATED, SQUE
6,707.0ft, 6,721.0ft, PERFORATED, SQUE
6,736.0ft, 6,751.0ft, PERFORATED, ISOLA
6,753.0ft, 6,774.0ft, PERFORATED, ISOLA
6,780.0ft, 6,801.0ft, PERFORATED, ISOLA
6,880.0ft, 6,895.0ft, PERFORATED, ISOLA
6,896.0ft, 6,904.0ft, PERFORATED, ISOLA
6,951.0ft, 6,968.0ft, PERFORATED, ISOLA
7,026.0ft, 7,040.0ft, PERFORATED, ISOLA
7,041.0ft, 7,048.0ft, PERFORATED, ISOLA
7,050.0ft, 7,062.0ft, PERFORATED, ISOLA
7,057.0ft, 7,082.0ft, PERFORATED, ISOLA
7,063.0ft, 7,084.0ft, PERFORATED, ISOLA
7,100.0ft, 7,119.0ft, PERFORATED, ISOLA
7,130.0ft, 7,138.0ft, PERFORATED, ISOLA
7,121.0ft, 7,142.0ft, PERFORATED, ISOLA
7,157.0ft, 7,165.0ft, PERFORATED, ISOLA
7,148.0ft, 7,169.0ft, PERFORATED, ISOLA
7,171.0ft, 7,189.0ft, PERFORATED, ISOLA

ROD STRING Report Date: 12/6/2006 00:00

Component	Top MD (ft)	Btm MD (ft)
POLROD	0.0	36.0
PNYROD	36.0	42.0
ROD	42.0	2,262.0
ROD	2,262.0	6,432.0
INSPMP	6,432.0	6,462.0

TUBING STRING Report Date: 12/5/2006 00:00

Component	Top MD (ft)	Btm MD (ft)
TH-DBB	20.0	20.6
FATNIP	20.6	21.3
CAS	21.3	5,395.2
AC	5,395.2	5,397.6
XO	5,397.6	5,398.7
CAS	5,398.7	6,459.0
STNIP	6,459.0	6,460.1
PMPJKT	6,460.1	6,491.2

PLUG BACK Report Date: 12/4/2006 00:00

Component	Top MD (ft)	Btm MD (ft)
BP-DR	6,530.0	6,533.0

PLUG BACK Report Date: 5/31/2004 00:00

Component	Top MD (ft)	Btm MD (ft)
CEMENT	6,615.0	6,617.1

PLUG BACK Report Date: 3/28/2004 00:00

Component	Top MD (ft)	Btm MD (ft)
BP-DR	6,686.0	6,688.2

PLUG BACK Report Date: 1/9/2004 00:00

Component	Top MD (ft)	Btm MD (ft)
BP-DR	7,000.0	7,002.1

PLUG BACK Report Date: 6/23/2002 00:00

Component	Top MD (ft)	Btm MD (ft)
JUNK	7,206.0	7,233.0

PLUG BACK Report Date: 7/30/2001 00:00

Component	Top MD (ft)	Btm MD (ft)
JUNK	7,233.0	7,235.0

PLUG BACK Report Date: 9/6/2000 00:00

Component	Top MD (ft)	Btm MD (ft)
SAND	7,242.0	7,252.0

PLUG BACK Report Date: 9/2/2000 00:00

Component	Top MD (ft)	Btm MD (ft)
CEMENT	7,252.0	7,347.0

PLUG BACK Report Date: 8/31/2000 00:00

Component	Top MD (ft)	Btm MD (ft)
CEMENT	7,347.0	7,358.0

CONDUCTOR CASING Report Date: 3/6/1992 00:00

Item	OD (in)	Grade	Wt. (ppf)	TopMD (ft)	BtmMD (ft)
CASING JOINT(S)	20.000			20.0	60.0

SURFACE CASING Report Date: 3/14/1992 00:00

Item	OD (in)	Grade	Wt. (ppf)	TopMD (ft)	BtmMD (ft)
CASING JOINT(S)	13.375	H-40	48.00	20.0	345.5
GUIDE SHOE	13.375	H-40	48.00	345.5	347.0

INTERMEDIATE CASING Report Date: 3/19/1992 00:00

Item	OD (in)	Grade	Wt. (ppf)	TopMD (ft)	BtmMD (ft)
CASING JOINT(S)	9.625	K-55	40.00	20.0	3,222.0
GUIDE SHOE	9.625	K-55	40.00	3,222.0	3,223.0

PRODUCTION CASING Report Date: 4/1/1992 00:00

Item	OD (in)	Grade	Wt. (ppf)	TopMD (ft)	BtmMD (ft)
CASING JOINT(S)	7.000	N-80	26.00	20.0	431.9
CASING JOINT(S)	7.000	K-55	26.00	431.9	1,331.1
CASING JOINT(S)	7.000	K-55	23.00	1,331.1	4,567.7
CASING JOINT(S)	7.000	K-55	26.00	4,567.7	6,340.1
FLAG JOINT	7.000	K-55	26.00	6,340.1	6,365.5
CASING JOINT(S)	7.000	N-80	26.00	6,365.5	7,234.0
FLOAT COLLAR	7.000	N-80	26.00	7,234.0	7,235.7
CASING JOINT(S)	7.000	N-80	26.00	7,235.7	7,324.8
FLOAT SHOE	7.000	N-80	26.00	7,324.8	7,327.0

LINER Report Date: 8/31/2000 00:00

Item	OD (in)	Grade	Wt. (ppf)	TopMD (ft)	BtmMD (ft)
PBR	6.276			5,696.3	5,697.3
LINER HANGER PACKER	6.276			5,697.3	5,706.2
LINER TIEBACK SEAL ASSEMBLY	6.276			5,706.2	5,708.0
LINER HANGER	6.276			5,708.0	5,714.5
CROSSOVER	6.276			5,714.5	5,718.2
CASING JOINT(S)	5.000	N-80	15.00	5,718.2	7,252.3
LANDING COLLAR	5.000			7,252.3	7,252.3
CASING JOINT(S)	5.000	N-80	15.00	7,252.3	7,299.3
	5.000			7,299.3	7,299.3
CASING JOINT(S)	5.000	N-80	15.00	7,299.3	7,346.4
GUIDE SHOE	5.000			7,346.4	7,347.0

Well: 367X-33S-RD1 S/T/R: 33S/30S/24E

CASING CEMENT DETAIL
- - -
Sfc Csg. Cmt Vol.: 500 cf
Hole Size: 17.5"
Top Job: Yes
Rtns to Sfc: 40 cf
TOC: Sfc
- - -

Interm Csg. Cmt Vol.: 1650 cf
Hole Size: 12.25"
Top Job: No
Rtns to Sfc: 95 cf
TOC: Sfc
- - -

Prod. Csg. Cmt Vol.: 1800 cf
Hole Size: 8.75"
Top Job: No
Rtns to Sfc:
TTOC: Sfc

RD Liner Cmt Vol.: 149.5 cf
Hole Size: 6.125"
Top Job: No
Rtns to Sfc: No
TTOC: TOL
- - -
Top of Formation:
UBA: 6680'
BLW: 7230'

Volume Behind Pipe:
1.3 Yield Assumed
Theoretical Calculations (TTOC)

OCCIDENTAL OF ELK HILLS INC

368-33S

Event: WELL MAINT - RIGLESS
Event End:
Sec. Reason:

Ground Level: 1,065.0ft
Datum: ORIGINAL KB @ 1,079.00ft (default)
API No.: 0402952945

Wellbore: ORIGINAL HOLE
PBMD: 7,214.0ft
Btm TMD: 7,500.0ft
Spud Date: 4/19/1976 00:00
BH Coord X: 6,143,945.69uss ft
BH Coord Y: 2,287,102.89uss ft

Casing Shoes (ft) | Schematic (7/30/2009) | Openings Top/Btm/Type/Status

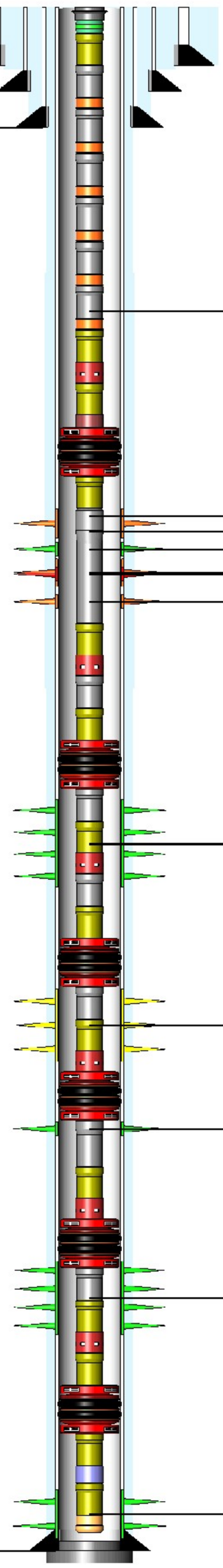

54.0
324.0
3,000.0
7,260.0

6,010.0ft, 6,011.0ft, WSO PERFS, SQUEE
6,175.0ft, 6,272.0ft, PERFORATED, SQUE
6,290.0ft, 6,340.0ft, PERFORATED, SQUE
6,290.0ft, 6,340.0ft, SQZ PERFS, SQUEE
6,372.0ft, 6,432.0ft, SQZ PERFS, SQUEE
6,372.0ft, 6,432.0ft, PERFORATED, OPEN
6,448.0ft, 6,524.0ft, PERFORATED, SQUE
6,494.0ft, 6,504.0ft, PERFORATED, ABAN
6,543.0ft, 6,560.0ft, PERFORATED, SQUE
6,636.0ft, 6,690.0ft, PERFORATED, OPEN
6,636.0ft, 6,692.0ft, PERFORATED, OPEN
6,730.0ft, 6,818.0ft, PERFORATED, ISOLA
6,833.0ft, 6,951.0ft, PERFORATED, OPEN
6,966.0ft, 7,082.0ft, PERFORATED, OPEN
7,120.0ft, 7,182.0ft, PERFORATED, OPEN

TUBING STRING Report Date: 3/13/2002 00:00

Component	Top MD (ft)	Btm MD (ft)
TH-SGL	14.0	16.1
LNDNIP	16.1	16.8
PUPJNT	16.8	29.0
TBGJNT	29.0	2,191.6
GLM-V	2,191.6	2,200.4
TBGJNT	2,200.4	3,647.4
GLM-V	3,647.4	3,655.8
TBGJNT	3,655.8	4,534.6
GLM-V	4,534.6	4,543.2
TBGJNT	4,543.2	5,140.4
GLM-V	5,140.4	5,148.9
TBGJNT	5,148.9	5,620.2
GLM-V	5,620.2	5,629.0
TBGJNT	5,629.0	6,132.6
GLM-V	6,132.6	6,141.5
PUPJNT	6,141.5	6,147.5
SS-C	6,147.5	6,150.2
PUPJNT	6,150.2	6,156.3
ON-OFF	6,156.3	6,158.1
PKR-S	6,158.1	6,164.7
PUPJNT	6,164.7	6,166.8
TBGJNT	6,166.8	6,575.5
PUPJNT	6,575.5	6,579.6
SS-O	6,579.6	6,583.4
TBGJNT	6,583.4	6,614.8
PUPJNT	6,614.8	6,618.9
PKR-S	6,618.9	6,625.6
TBGJNT	6,625.6	6,657.0
PUPJNT	6,657.0	6,673.1
SS-O	6,673.1	6,676.9
TBGJNT	6,676.9	6,708.4
PUPJNT	6,708.4	6,718.5
PKR-S	6,718.5	6,725.0
TBGJNT	6,725.0	6,787.9
PUPJNT	6,787.9	6,816.1
SS-C	6,816.1	6,820.0
PKR-S	6,820.0	6,826.5
TBGJNT	6,826.5	6,952.4
PUPJNT	6,952.4	6,956.4
SS-O	6,956.4	6,960.3
PKR-S	6,960.3	6,966.9
TBGJNT	6,966.9	7,061.2
PUPJNT	7,061.2	7,081.5
SS-O	7,081.5	7,085.3
PUPJNT	7,085.3	7,095.4
PKR-S	7,095.4	7,099.4
PUPJNT	7,099.4	7,117.7
NOGO-O	7,117.7	7,118.8
PUPJNT	7,118.8	7,124.9
WLREG	7,124.9	7,125.3

PLUG BACK Report Date: 6/17/1976 00:00

Component	Top MD (ft)	Btm MD (ft)
PLUGBK	7,214.0	7,260.0

PLUG BACK Report Date: 6/16/1976 00:00

Component	Top MD (ft)	Btm MD (ft)
CEMENT	7,260.0	7,500.0

CONDUCTOR CASING Report Date: 4/19/1976 00:00

Item	OD (in)	Grade	Wt. (ppf)	TopMD (ft)	BtmMD (ft)
CASING JOINT(S)	20.000			14.0	54.0

SURFACE CASING Report Date: 5/23/1976 00:00

Item	OD (in)	Grade	Wt. (ppf)	TopMD (ft)	BtmMD (ft)
CASING JOINT(S)	13.375	K-55	54.50	14.0	324.0

INTERMEDIATE CASING Report Date: 5/26/1976 00:00

Item	OD (in)	Grade	Wt. (ppf)	TopMD (ft)	BtmMD (ft)
CASING JOINT(S)	9.625	K-55	40.00	14.0	3,000.0

PRODUCTION CASING Report Date: 6/16/1976 00:00

Item	OD (in)	Grade	Wt. (ppf)	TopMD (ft)	BtmMD (ft)
CASING JOINT(S)	7.000	K-55	26.00	14.0	76.4
CASING JOINT(S)	7.000	K-55	23.00	76.4	5,085.2
CASING JOINT(S)	7.000	K-55	26.00	5,085.2	7,260.0

Well: 368-33S S/T/R: 33S/30S/24E

CASING CEMENT DETAIL
- - -
Sfc Csg. Cmt Vol.: 389 cf
Hole Size: 17.5"
Top Job: No
Rtns to Sfc:
TTOC: Sfc
- - -

Interm Csg. Cmt Vol.: 2440 cf
Hole Size: 12.25"
Top Job: No
Rtns to Sfc: 100 cf
TOC: Sfc
- - -

Prod. Csg. Cmt Vol.: 1800 cf
Hole Size: 8.75"
Top Job: No
Rtns to Sfc:
TTOC: Sfc

Liner Cmt Vol.:
Hole Size:
Top Job:
Rtns to Sfc:
TTOC:
- - -
Top of Formation:
UBA: 6730'
BLW: 7260'

Volume Behind Pipe:
1.3 Yield Assumed
Theoretical Calculations (TTOC)

OCCIDENTAL OF ELK HILLS INC

368-34S

Event: WELL MAINT - RIG
Event End: 9/11/2008 00:00
Sec. Reason:

Ground Level: 904.0ft
Datum: ORIGINAL KB @ 913.00ft (default)
API No.: 0402927666

Wellbore: ORIGINAL HOLE
PBMD: 7,349.0ft
Btm TMD: 7,455.0ft
Spud Date: 5/5/1949 00:00
BH Coord X: 6,149,098.81uss ft
BH Coord Y: 2,286,907.81uss ft

Casing Shoes (ft) | Schematic (10/1/2008) | Openings Top/Btm/Type/Status

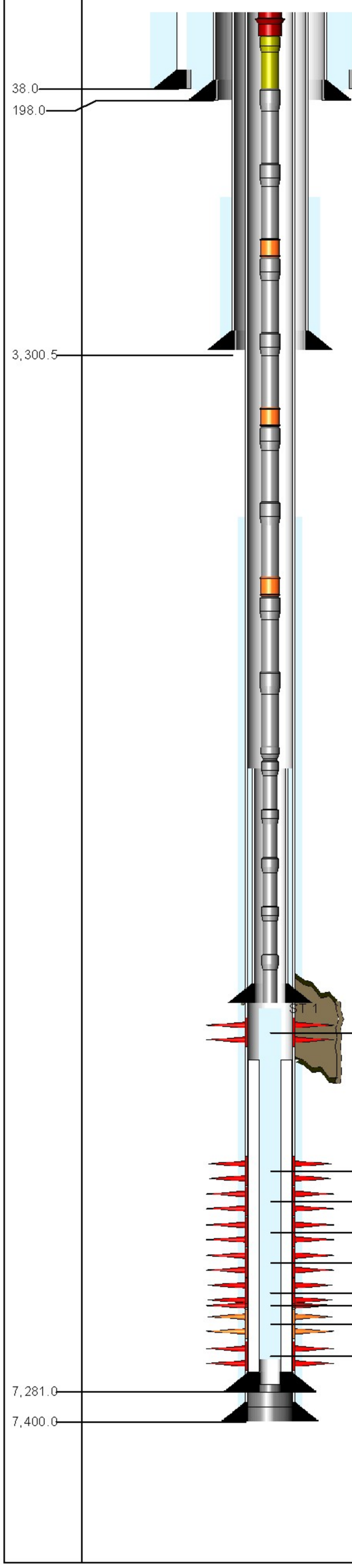

6,160.0ft, 6,161.0ft, PERFORATED, ABANDO
6,656.0ft, 6,706.0ft, PERFORATED, ABANDO
6,726.0ft, 6,790.0ft, PERFORATED, ABANDO
6,827.0ft, 6,897.0ft, PERFORATED, ABANDO
6,920.0ft, 6,930.0ft, PERFORATED, ABANDO
6,940.0ft, 7,100.0ft, PERFORATED, ABANDO
7,080.0ft, 7,100.0ft, PERFORATED, ABANDO
7,120.0ft, 7,200.0ft, PERFORATED, SQUEEZ
7,120.0ft, 7,200.0ft, REPERFORATED, ABAN
7,213.0ft, 7,240.0ft, PERFORATED, ABANDO

TUBING STRING Report Date: 4/16/2006 00:00

Component	Top MD (ft)	Btm MD (ft)
TH-DBB	9.0	9.7
PUPJNT	9.7	28.6
TBGJNT	28.6	2,200.8
GLM-V	2,200.8	2,209.2
TBGJNT	2,209.2	3,978.3
GLM-V	3,978.3	3,986.7
TBGJNT	3,986.7	5,201.1
GLM-V	5,201.1	5,209.5
TBGJNT	5,209.5	5,480.8
XO	5,480.8	5,481.9
TBGJNT	5,481.9	6,124.5
GLM-V	6,124.5	6,131.2
TBGJNT	6,131.2	6,582.4
GLM-V	6,582.4	6,589.1
TBGJNT	6,589.1	6,621.7
ON-OFF	6,621.7	6,623.1
PKR-S	6,623.1	6,628.3
TBGJNT	6,628.3	6,814.9
SS-C	6,814.9	6,818.9
PUPJNT	6,818.9	6,823.0
PKR-S	6,823.0	6,828.2
PUPJNT	6,828.2	6,840.1
TBGJNT	6,840.1	6,902.7
SS-C	6,902.7	6,906.7
TBGJNT	6,906.7	7,060.7
SA	7,060.7	7,061.4

PLUG BACK Report Date: 4/7/1995 00:00

Component	Top MD (ft)	Btm MD (ft)
CEMENT	7,279.0	7,281.0

PLUG BACK Report Date: 4/2/1995 00:00

Component	Top MD (ft)	Btm MD (ft)
CEMENT	7,281.0	7,290.0

PLUG BACK Report Date: 8/9/1949 00:00

Component	Top MD (ft)	Btm MD (ft)
CEMENT	7,290.0	7,400.0

CONDUCTOR CASING Report Date: 5/5/1949 00:00

Item	OD (in)	Grade	Wt. (ppf)	TopMD (ft)	BtmMD (ft)
CASING JOINT(S)	26.000			9.0	38.0

SURFACE CASING Report Date: 7/1/1949 00:00

Item	OD (in)	Grade	Wt. (ppf)	TopMD (ft)	BtmMD (ft)
CASING JOINT(S)	16.000	J-55	65.00	9.0	198.0

INTERMEDIATE CASING Report Date: 7/10/1949 00:00

Item	OD (in)	Grade	Wt. (ppf)	TopMD (ft)	BtmMD (ft)
CASING JOINT(S)	10.750	J-55	45.50	9.0	57.5
CASING JOINT(S)	10.750	J-55	40.50	57.5	2,069.2
CASING JOINT(S)	10.750	J-55	45.50	2,069.2	3,300.0

PRODUCTION CASING Report Date: 8/9/1949 00:00

Item	OD (in)	Grade	Wt. (ppf)	TopMD (ft)	BtmMD (ft)
CASING JOINT(S)	7.000	N-80	26.00	9.0	53.0
CASING JOINT(S)	7.000	N-80	23.00	53.0	4,485.0
CASING JOINT(S)	7.000	N-80	23.00	4,485.0	6,096.0
CASING JOINT(S)	7.000	N-80	26.00	6,096.0	7,400.0

LINER Report Date: 12/2/2002 00:00

Item	OD (in)	Grade	Wt. (ppf)	TopMD (ft)	BtmMD (ft)
TIE BACK	5.000			5,500.0	5,511.3
LINER HANGER	5.000			5,511.3	5,517.1
CROSSOVER	5.000	N-80	15.00	5,517.1	5,520.9
CASING JOINT(S)	5.000	N-80	15.00	5,520.9	7,357.6
LANDING COLLAR	5.000			7,357.6	7,357.7
CASING JOINT(S)	5.000	N-80	15.00	7,357.7	7,404.4
	5.000			7,404.4	7,404.4
CASING JOINT(S)	5.000	N-80	15.00	7,404.4	7,449.4
FLOAT SHOE	5.000			7,449.4	7,450.0

INNER LINER Report Date: 4/2/1995 00:00

Item	OD (in)	Grade	Wt. (ppf)	TopMD (ft)	BtmMD (ft)
LINER HANGER	6.184	N-80	9.30	6,503.1	6,510.0
CROSSOVER	7.000	N-80	9.30	6,510.0	6,511.0
CROSSOVER	3.500	N-80	9.30	6,511.0	6,512.1
CROSSOVER	3.500	N-80	9.30	6,512.1	6,512.6
CASING JOINT(S)	3.500	N-80	9.30	6,512.6	7,278.6
CROSSOVER	3.500	N-80	9.30	7,278.6	7,279.2
FLOAT COLLAR	3.500	N-80	9.30	7,279.2	7,280.4
GUIDE SHOE	3.500	N-80	9.30	7,280.4	7,281.0

Well: 368-34S S/T/R: 34/30S/24E
Last Well Status: P & A
Status Date: Nov 30, 2002

CASING CEMENT DETAIL
- - -
Sfc Csg. Cmt Vol.: 520 cf
Hole Size: 22
Top Job: no
Rtns to Sfc: no
TTOC: Sfc
- - -

Interm Csg. Cmt Vol.: 1105 cf
Hole Size: 12.25
Top Job: no
Rtns to Sfc: no
TTOC: Sfc
- - -

Prod. Csg. Cmt Vol.: 690
Hole Size: 9.625
Top Job: no
Rtns to Sfc: no
TTOC: 4501'

Liner Cmt Vol.:
Hole Size:
Top Job:
Rtns to Sfc:
TOC:
- - -
Top of Formation:
UBA: 6803'
BLW: 7258'

Volume Behind Pipe:
1.3 Yield Assumed
Theoretical Calculations (TTOC) JEP

OCCIDENTAL OF ELK HILLS INC

368-34S-RD1

Event: WELL MAINT - RIG
Event End: 9/11/2008 00:00
Sec. Reason:

Ground Level: 904.0ft
Datum: ORIGINAL KB @ 913.00ft (default)
API No.: 0402927666

Wellbore: ST 1
PBMD: 7,349.0ft
Btm TMD: 7,455.0ft
Spud Date: 5/5/1949 00:00
BH Coord X: 6,149,115.20uss ft
BH Coord Y: 2,286,999.93uss ft

Casing Shoes (ft) | Schematic (10/1/2008) | Openings Top/Btm/Type/Status

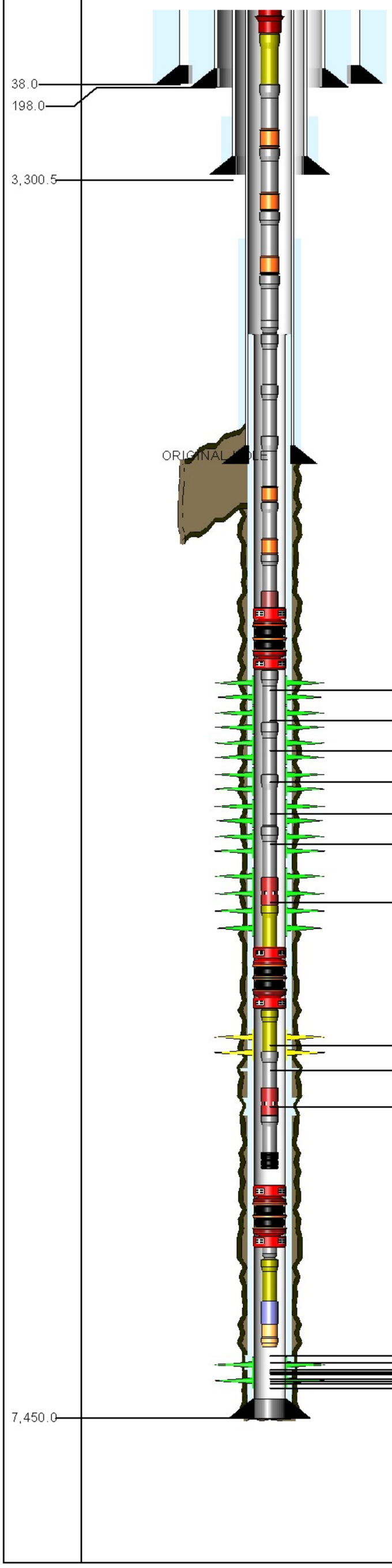

6,660.0ft, 6,673.0ft, PERFORATED, OPEN
6,681.0ft, 6,686.0ft, PERFORATED, OPEN
6,692.0ft, 6,698.0ft, PERFORATED, OPEN
6,712.0ft, 6,721.0ft, PERFORATED, OPEN
6,733.0ft, 6,744.0ft, PERFORATED, OPEN
6,750.0ft, 6,774.0ft, PERFORATED, OPEN
6,794.0ft, 6,822.0ft, PERFORATED, OPEN
6,834.0ft, 6,856.0ft, PERFORATED, ISOLATE
6,870.0ft, 6,874.0ft, SQZ PERFS, SQUEEZE
6,904.0ft, 6,909.0ft, SQZ PERFS, SQUEEZE
7,122.0ft, 7,126.0ft, SQZ PERFS, SQUEEZE
7,129.0ft, 7,191.0ft, PERFORATED, OPEN
7,195.0ft, 7,199.0ft, SQZ PERFS, SQUEEZE
7,202.0ft, 7,212.0ft, PERFORATED, OPEN
7,212.0ft, 7,216.0ft, PERFORATED, OPEN
7,216.0ft, 7,223.0ft, PERFORATED, OPEN
7,232.0ft, 7,255.0ft, PERFORATED, OPEN
7,255.0ft, 7,260.0ft, PERFORATED, OPEN
7,263.0ft, 7,274.0ft, PERFORATED, OPEN
7,288.0ft, 7,296.0ft, PERFORATED, OPEN

TUBING STRING Report Date: 4/16/2006 00:00

Component	Top MD (ft)	Btm MD (ft)
TH-DBB	9.0	9.7
PUPJNT	9.7	28.6
TBGJNT	28.6	2,200.8
GLM-V	2,200.8	2,209.2
TBGJNT	2,209.2	3,978.3
GLM-V	3,978.3	3,986.7
TBGJNT	3,986.7	5,201.1
GLM-V	5,201.1	5,209.5
TBGJNT	5,209.5	5,480.8
XO	5,480.8	5,481.9
TBGJNT	5,481.9	6,124.5
GLM-V	6,124.5	6,131.2
TBGJNT	6,131.2	6,582.4
GLM-V	6,582.4	6,589.1
TBGJNT	6,589.1	6,621.7
ON-OFF	6,621.7	6,623.1
PKR-S	6,623.1	6,628.3
TBGJNT	6,628.3	6,814.9
SS-C	6,814.9	6,818.9
PUPJNT	6,818.9	6,823.0
PKR-S	6,823.0	6,828.2
PUPJNT	6,828.2	6,840.1
TBGJNT	6,840.1	6,902.7
SS-C	6,902.7	6,906.7
TBGJNT	6,906.7	7,060.7
SA	7,060.7	7,061.4

PKR ASSY Report Date: 1/1/2003 00:00

Component	Top MD (ft)	Btm MD (ft)
PKR-S	7,065.0	7,069.8
XO	7,069.8	7,070.4
PUPJNT	7,070.4	7,074.5
NOGO-O	7,074.5	7,075.9
WLREG	7,075.9	7,076.4

PLUG BACK Report Date: 1/1/2003 00:00

Component	Top MD (ft)	Btm MD (ft)
CEMENT	7,352.0	7,450.0

PLUG BACK Report Date: 12/2/2002 00:00

Component	Top MD (ft)	Btm MD (ft)
CEMENT	7,450.0	7,455.0

CONDUCTOR CASING Report Date: 5/5/1949 00:00

Item	OD (in)	Grade	Wt. (ppf)	TopMD (ft)	BtmMD (ft)
CASING JOINT(S)	26.000			9.0	38.0

SURFACE CASING Report Date: 7/1/1949 00:00

Item	OD (in)	Grade	Wt. (ppf)	TopMD (ft)	BtmMD (ft)
CASING JOINT(S)	16.000	J-55	65.00	9.0	198.0

INTERMEDIATE CASING Report Date: 7/10/1949 00:00

Item	OD (in)	Grade	Wt. (ppf)	TopMD (ft)	BtmMD (ft)
CASING JOINT(S)	10.750	J-55	45.50	9.0	57.5
CASING JOINT(S)	10.750	J-55	40.50	57.5	2,069.2
CASING JOINT(S)	10.750	J-55	45.50	2,069.2	3,300.0

PRODUCTION CASING Report Date: 8/9/1949 00:00

Item	OD (in)	Grade	Wt. (ppf)	TopMD (ft)	BtmMD (ft)
CASING JOINT(S)	7.000	N-80	26.00	9.0	53.0
CASING JOINT(S)	7.000	N-80	23.00	53.0	4,485.0
CASING JOINT(S)	7.000	N-80	23.00	4,485.0	6,096.0
CASING JOINT(S)	7.000	N-80	26.00	6,096.0	7,400.0

LINER Report Date: 12/2/2002 00:00

Item	OD (in)	Grade	Wt. (ppf)	TopMD (ft)	BtmMD (ft)
TIE BACK	5.000			5,500.0	5,511.3
LINER HANGER	5.000			5,511.3	5,517.1
CROSSOVER	5.000	N-80	15.00	5,517.1	5,520.9
CASING JOINT(S)	5.000	N-80	15.00	5,520.9	7,357.6
LANDING COLLAR	5.000			7,357.6	7,357.7
CASING JOINT(S)	5.000	N-80	15.00	7,357.7	7,404.4
	5.000			7,404.4	7,404.4
CASING JOINT(S)	5.000	N-80	15.00	7,404.4	7,449.4
FLOAT SHOE	5.000			7,449.4	7,450.0

Well: 368-34S-RD1 S/T/R: 34/30S/24E

CASING CEMENT DETAIL
- - -
Sfc Csg. Cmt Vol.: 520
Hole Size: 22
Top Job: no
Rtns to Sfc: no
TTOC: Sfc
- - -

Interm Csg. Cmt Vol.: 1105
Hole Size: 12.25
Top Job: no
Rtns to Sfc: no
TTOC: Sfc
- - -

Prod. Csg. Cmt Vol.: 690
Hole Size: 9.625
Top Job: no
Rtns to Sfc: no
TTOC: 4501'

Liner Cmt Vol.: 322
Hole Size: 6.125
Top Job: no
Rtns to Sfc: no
TTOC: 5500'
- - -
Top of Formation:
UBA: 6829'
BLW: 7356'

Volume Behind Pipe:
1.3 Yield Assumed
Theoretical Calculations (TTOC) RLW

OCCIDENTAL OF ELK HILLS INC

368-35S

Event: WELL MAINT - RIGLESS
Event End: 4/17/2008 00:00
Sec. Reason:
End Status: FINISHED - SUCCESS
Well Classification: INJECTION

Ground Level: 809.0ft
Datum: ORIGINAL KB @ 819.00ft (KEY 2817)(default)
API No.: 0402927782

Wellbore: ORIGINAL HOLE
PBMD: 7,680.0ft
Btm TMD: 7,690.0ft
Spud Date: 7/12/1951 00:00
BH Coord X: 6,154,396.19uss ft
BH Coord Y: 2,286,894.93uss ft

Casing Shoes (ft) | Schematic (5/1/2008) | Openings Top/Btm/Type/Status

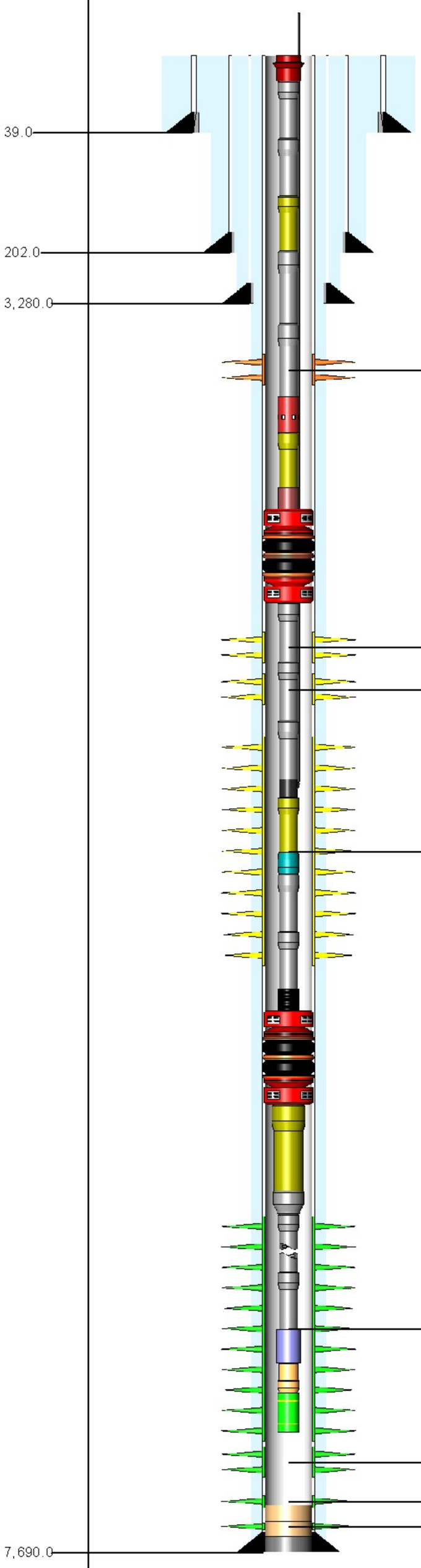

6,430.0ft, 6,431.0ft, PERFORATED, SQU
7,203.0ft, 7,250.0ft, PERFORATED, ISOL
7,265.0ft, 7,295.0ft, PERFORATED, ISOL
7,325.0ft, 7,410.0ft, PERFORATED, ISOL
7,435.0ft, 7,490.0ft, PERFORATED, OPE
7,515.0ft, 7,580.0ft, PERFORATED, OPE
7,620.0ft, 7,645.0ft, PERFORATED, OPE
7,660.0ft, 7,670.0ft, PERFORATED, OPE

TUBING STRING Report Date: 11/14/2002 00:00

Component	Top MD (ft)	Btm MD (ft)
TH-DBB	10.0	10.6
TBGJNT	10.6	73.4
PUPJNT	73.4	95.5
TBGJNT	95.5	7,129.0
SS-C	7,129.0	7,132.2
PUPJNT	7,132.2	7,142.3
ON-OFF	7,142.3	7,143.3
PKR-S	7,143.3	7,147.4
TBGJNT	7,147.4	7,364.7
INJM-D	7,364.7	7,373.8
PUPJNT	7,373.8	7,383.8
PNIP-O	7,383.8	7,385.0
TBGJNT	7,385.0	7,416.3
SA	7,416.3	7,425.1
PKR-S	7,425.1	7,429.9
PUPJNT	7,429.9	7,434.1
XO	7,434.1	7,434.8
CAS	7,434.8	7,444.8
NOGO-O	7,444.8	7,445.9
WLREG	7,445.9	7,446.2
	7,446.2	

PLUG BACK Report Date: 4/29/2005 00:00

Component	Top MD (ft)	Btm MD (ft)
FILL	7,643.0	7,657.0

PLUG BACK Report Date: 4/11/2003 00:00

Component	Top MD (ft)	Btm MD (ft)
FILL	7,657.0	7,680.0

PLUG BACK Report Date: 11/1/1951 00:00

Component	Top MD (ft)	Btm MD (ft)
CEMENT	7,680.0	7,690.0

CONDUCTOR CASING Report Date: 7/12/1951 00:00

Item	OD (in)	Grade	Wt. (ppf)	TopMD (ft)	BtmMD (ft)
CASING JOINT(S)	26.000			10.0	39.0

SURFACE CASING Report Date: 9/20/1951 00:00

Item	OD (in)	Grade	Wt. (ppf)	TopMD (ft)	BtmMD (ft)
CASING JOINT(S)	16.000	H-40	65.00	10.0	202.0

INTERMEDIATE CASING Report Date: 9/26/1951 00:00

Item	OD (in)	Grade	Wt. (ppf)	TopMD (ft)	BtmMD (ft)
CASING JOINT(S)	10.750	J-55	45.50	10.0	63.0
CASING JOINT(S)	10.750	J-55	40.50	63.0	1,977.0
CASING JOINT(S)	10.750	J-55	45.50	1,977.0	3,280.0

PRODUCTION CASING Report Date: 10/30/1951 00:00

Item	OD (in)	Grade	Wt. (ppf)	TopMD (ft)	BtmMD (ft)
CASING JOINT(S)	7.000	N-80	26.00	10.0	45.0
CASING JOINT(S)	7.000	N-80	23.00	45.0	5,964.0
CASING JOINT(S)	7.000	N-80	26.00	5,964.0	7,690.0

Well: 368-35S S/T/R: 35S/30S/24E

CASING CEMENT DETAIL
- - -
Sfc Csg. Cmt Vol.: 450 sx
Hole Size: 22"
Top Job: No
Rtns to Sfc: Yes
TOC: Sfc
- - -

Interm Csg. Cmt Vol.: 800 sx
Hole Size: 15"
Top Job: No
Rtns to Sfc: No
TOC: 1300' (Thermo Survey)
- - -

Prod. Csg. Cmt Vol.: 500 sx
Hole Size: 9.75"
Top Job: No
Rtns to Sfc: No
TOC: 5670' (Thermo Survey)
- - -

Liner Cmt Vol.:
Hole Size:
Top Job:
Rtns to Sfc:
TTOC:
- - -
Top of Formation:
UBA: 7183'
BLW: N/A

Volume Behind Pipe:
1.3 Yield Assumed
Theoretical Calculations (TTOC)

OCCIDENTAL OF ELK HILLS INC

368X-34S

Event: WELL MAINT - RIGLESS
Event End: 7/15/2009 00:00
Sec. Reason:
End Status: FINISHED - SUCCESS
Well Classification: DEVELOPMENT

Ground Level: 924.5ft
Datum: ORIGINAL KB @ 945.50ft (default)
API No.: 0403019893

Wellbore: ORIGINAL HOLE
PBMD: 7,313.0ft
Btm TMD: 7,415.0ft
Spud Date: 2/14/2002 00:00
BH Coord X: 6,149,608.97uss ft
BH Coord Y: 2,287,360.38uss ft

Casing Shoes (ft)

Schematic (8/1/2009)

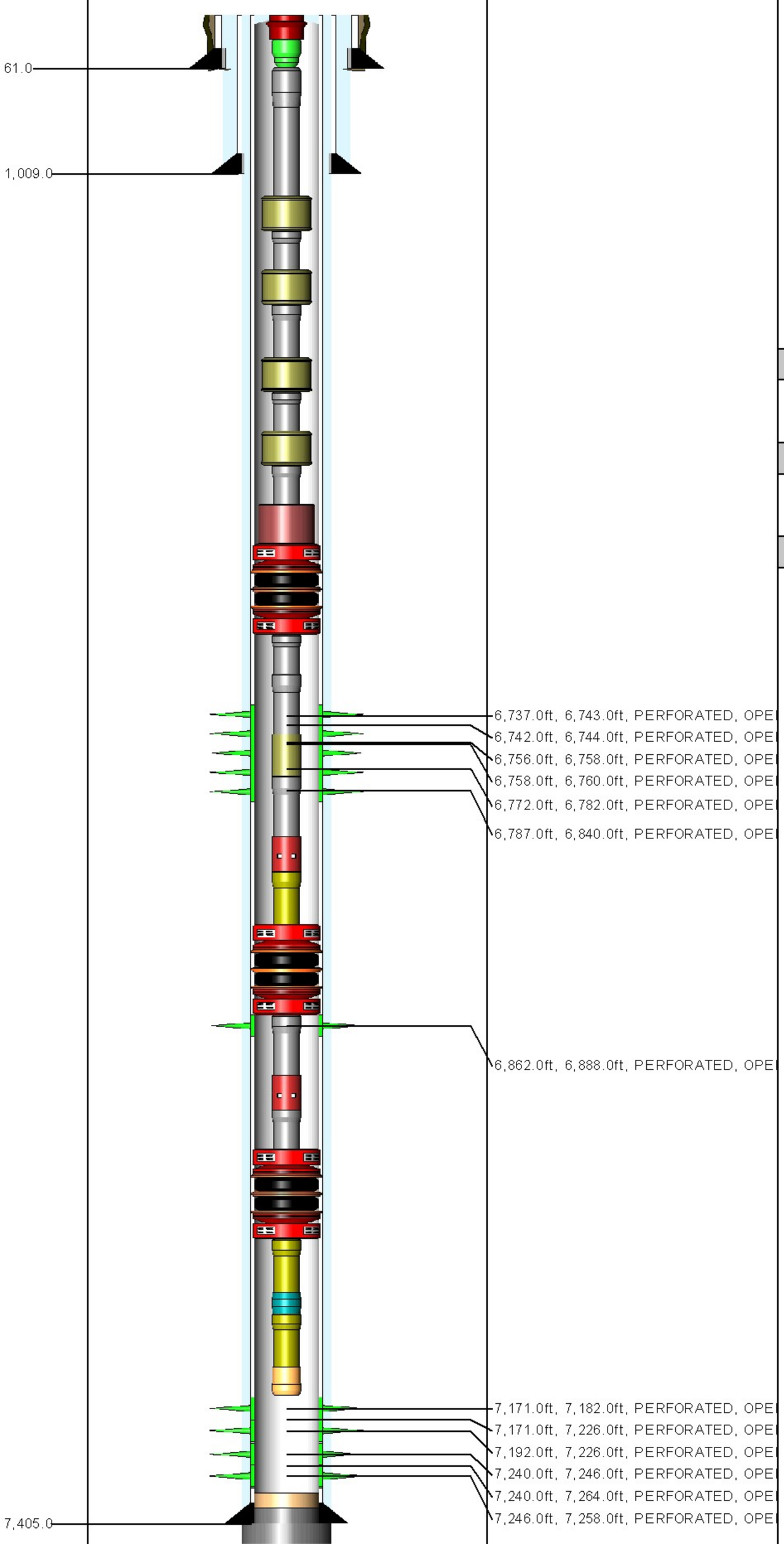

Openings Top/Btm/Type/Status

6,737.0ft, 6,743.0ft, PERFORATED, OPE
6,742.0ft, 6,744.0ft, PERFORATED, OPE
6,756.0ft, 6,758.0ft, PERFORATED, OPE
6,758.0ft, 6,760.0ft, PERFORATED, OPE
6,772.0ft, 6,782.0ft, PERFORATED, OPE
6,787.0ft, 6,840.0ft, PERFORATED, OPE
6,862.0ft, 6,888.0ft, PERFORATED, OPE
7,171.0ft, 7,182.0ft, PERFORATED, OPE
7,171.0ft, 7,226.0ft, PERFORATED, OPE
7,192.0ft, 7,226.0ft, PERFORATED, OPE
7,240.0ft, 7,246.0ft, PERFORATED, OPE
7,240.0ft, 7,264.0ft, PERFORATED, OPE
7,246.0ft, 7,258.0ft, PERFORATED, OPE

TUBING STRING Report Date: 6/13/2006 00:00

Component	Top MD (ft)	Btm MD (ft)
TH-DBB	21.0	21.6
FATNIP	21.6	22.3
CAS	22.3	2,281.7
GLM	2,281.7	2,290.0
CAS	2,290.0	4,188.9
GLM	4,188.9	4,197.8
CAS	4,197.8	5,600.9
GLM	5,600.9	5,609.5
CAS	5,609.5	6,610.1
GLM	6,610.1	6,618.6
CAS	6,618.6	6,649.6
ON-OFF	6,649.6	6,651.1
PKR	6,651.1	6,656.6
CAS	6,656.6	6,687.6
CAS	6,687.6	6,749.5
BJ	6,749.5	6,769.5
BJ	6,769.5	6,780.7
CAS	6,780.7	6,845.6
SS-O	6,845.6	6,850.5
PUPJNT	6,850.5	6,855.5
PKR	6,855.5	6,861.0
CAS	6,861.0	7,079.7
SS-O	7,079.7	7,084.0
CAS	7,084.0	7,115.3
PKR	7,115.3	7,119.4
PUPJNT	7,119.4	7,129.5
PRONIP	7,129.5	7,131.3
PUPJNT	7,131.3	7,139.4
WLREG	7,139.4	7,139.9

PLUG BACK Report Date: 1/31/2003 00:00

Component	Top MD (ft)	Btm MD (ft)
FILL	7,299.0	7,313.0

PLUG BACK Report Date: 3/3/2002 00:00

Component	Top MD (ft)	Btm MD (ft)
CEMENT	7,313.0	7,405.0

PLUG BACK Report Date: 3/3/2002 00:00

Component	Top MD (ft)	Btm MD (ft)
CEMENT	7,405.0	7,415.0

CONDUCTOR CASING Report Date: 2/12/2002 00:00

Item	OD (in)	Grade	Wt. (ppf)	TopMD (ft)	BtmMD (ft)
CASING JOINT(S)	14.000			21.0	61.0

SURFACE CASING Report Date: 2/16/2002 00:00

Item	OD (in)	Grade	Wt. (ppf)	TopMD (ft)	BtmMD (ft)
CASING JOINT(S)	9.625	K-55	36.00	21.0	961.0
	9.625			961.0	961.0
CASING JOINT(S)	9.625	K-55	36.00	961.0	1,007.8
GUIDE SHOE	9.625			1,007.8	1,009.0

PRODUCTION CASING Report Date: 3/2/2002 00:00

Item	OD (in)	Grade	Wt. (ppf)	TopMD (ft)	BtmMD (ft)
CASING JOINT(S)	7.000	N-80	26.00	21.0	4,676.0
FLAG JOINT	7.000	N-80	26.00	4,676.0	4,698.6
CASING JOINT(S)	7.000	N-80	26.00	4,698.6	6,773.0
FLAG JOINT	7.000	N-80	26.00	6,773.0	6,796.4
CASING JOINT(S)	7.000	N-80	26.00	6,796.4	7,313.4
FLOAT COLLAR	7.000			7,313.4	7,314.9
CASING JOINT(S)	7.000	N-80	26.00	7,314.9	7,403.3
FLOAT SHOE	7.000			7,403.3	7,405.0

Well: 368X-34S S/T/R: 34S/30S/24E

CASING CEMENT DETAIL
- - -
Sfc Csg. Cmt Vol.: 644 cf
Hole Size: 12.25"
Top Job: No
Rtns to Sfc: 112 cf
TOC: Sfc
- - -

Interm Csg. Cmt Vol.:
Hole Size:
Top Job:
Rtns to Sfc:
TOC:
- - -

Prod. Csg. Cmt Vol.: 1819 cf
Hole Size: 8.75"
Top Job: No
Rtns to Sfc: 84 cf
TOC: Sfc
- - -

Liner Cmt Vol.:
Hole Size:
Top Job:
Rtns to Sfc:
TOC:
- - -
Top of Formation:
UBA: 6861'
BLW: 7315'

Volume Behind Pipe:
1.3 Yield Assumed on
Theoretical Calculations (TTOC)

OCCIDENTAL OF ELK HILLS INC

371-2G

Event: WELL MAINT - RIGLESS
Event End: 5/7/2008 00:00
Sec. Reason:

Ground Level: 846.0ft
Datum: ORIGINAL KB @ 860.00ft (default)
API No.: 0402958291

Wellbore: ORIGINAL HOLE
PBMD: 6,800.0ft
Btm TMD: 8,150.0ft
Spud Date: 3/2/1978 00:00
BH Coord X: 6,154,801.30uss ft
BH Coord Y: 2,286,313.30uss ft

Casing Shoes (ft)	Schematic (6/1/2008)	Openings Top/Btm/Type/Status

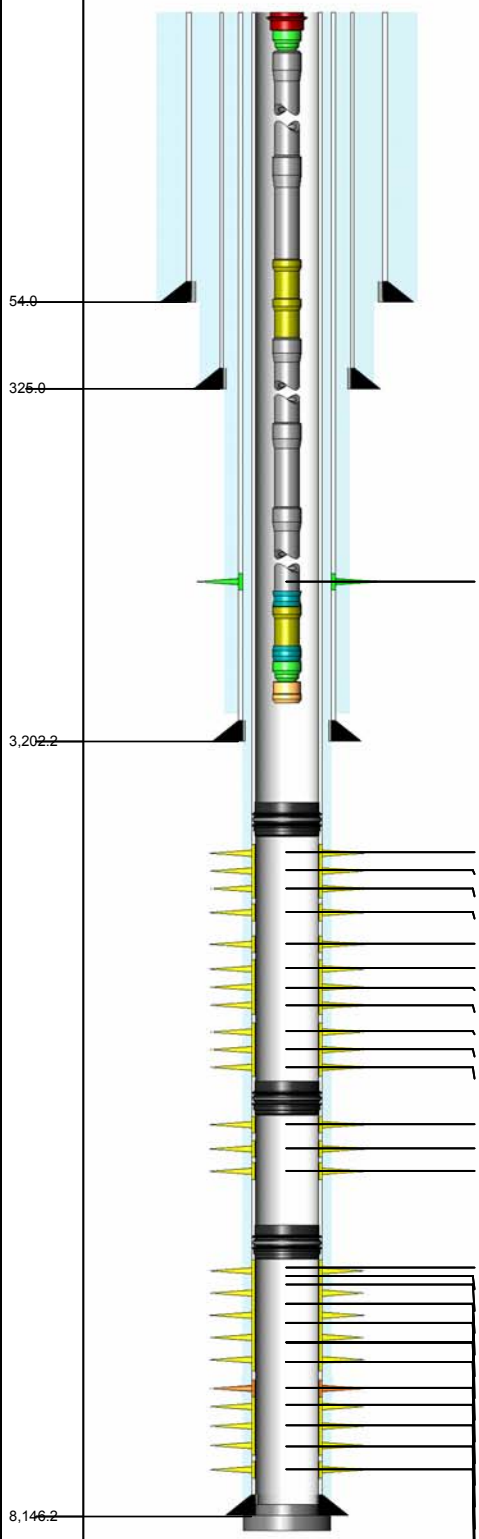

2,400.0ft, 2,408.0ft, PERFORATED, OPEN

6,878.0ft, 6,903.0ft, PERFORATED, ISOLATED
6,912.0ft, 6,928.0ft, PERFORATED, ISOLATED
6,942.0ft, 6,962.0ft, PERFORATED, ISOLATED
7,015.0ft, 7,025.0ft, PERFORATED, ISOLATED
7,141.0ft, 7,145.0ft, PERFORATED, ISOLATED
7,201.0ft, 7,212.0ft, PERFORATED, ISOLATED
7,233.0ft, 7,241.0ft, PERFORATED, ISOLATED
7,246.0ft, 7,258.0ft, PERFORATED, ISOLATED
7,311.0ft, 7,317.0ft, PERFORATED, ISOLATED
7,323.0ft, 7,329.0ft, PERFORATED, ISOLATED
7,334.0ft, 7,347.0ft, PERFORATED, ISOLATED

7,360.0ft, 7,364.0ft, PERFORATED, ISOLATED
7,373.0ft, 7,379.0ft, PERFORATED, ISOLATED
7,385.0ft, 7,393.0ft, PERFORATED, ISOLATED

7,443.0ft, 7,470.0ft, PERFORATED, ISOLATED
7,443.1ft, 7,485.1ft, PERFORATED, ISOLATED
7,470.0ft, 7,485.0ft, PERFORATED, ISOLATED
7,509.0ft, 7,530.0ft, PERFORATED, ISOLATED
7,510.1ft, 7,530.1ft, PERFORATED, ISOLATED
7,555.0ft, 7,605.0ft, PERFORATED, ISOLATED
7,555.1ft, 7,605.1ft, PERFORATED, ISOLATED
7,628.0ft, 7,652.0ft, PERFORATED, ISOLATED
7,628.1ft, 7,652.1ft, PERFORATED, ISOLATED
7,676.0ft, 7,712.0ft, PERFORATED, ISOLATED
7,676.1ft, 7,712.1ft, PERFORATED, ISOLATED
7,785.0ft, 7,797.0ft, PERFORATED, SQUEEZED
7,797.0ft, 7,830.0ft, PERFORATED, ISOLATED
7,855.0ft, 7,883.0ft, PERFORATED, ISOLATED
7,908.0ft, 7,970.0ft, PERFORATED, ISOLATED
7,995.0ft, 8,010.0ft, PERFORATED, ISOLATED

TUBING STRING — Report Date: 1/19/2008 00:00

Component	Top MD (ft)	Btm MD (ft)
TH-DBB	14.0	14.6
FATNIP	14.6	15.3
CAS	15.3	46.8
PUPJNT	46.8	53.0
PUPJNT	53.0	63.2
CAS	63.2	2,410.0
STNIP	2,410.0	2,411.1
PUPJNT	2,411.1	2,421.2
PRONIP	2,421.2	2,422.4
FATNIP	2,422.4	2,423.9
WLREG	2,423.9	2,424.4

PLUG BACK — Report Date: 1/15/2008 00:00

Component	Top MD (ft)	Btm MD (ft)
BP-DR	6,800.0	6,802.5

PLUG BACK — Report Date: 6/22/2004 00:00

Component	Top MD (ft)	Btm MD (ft)
BP-RET	7,355.0	7,358.5

PLUG BACK — Report Date: 6/2/2004 00:00

Component	Top MD (ft)	Btm MD (ft)
BP-DR	7,435.0	7,437.6

PLUG BACK — Report Date: 1/1/1979 00:00

Component	Top MD (ft)	Btm MD (ft)
CEMENT	8,102.0	8,146.0

PLUG BACK — Report Date: 12/30/1978 00:00

Component	Top MD (ft)	Btm MD (ft)
CEMENT	8,146.0	8,150.0

CONDUCTOR CASING — Report Date: 3/2/1978 00:00

Item	OD (in)	Grade	Wt. (ppf)	TopMD (ft)	BtmMD (ft)
CASING JOINT(S)	20.000			14.0	54.0

SURFACE CASING — Report Date: 11/29/1978 00:00

Item	OD (in)	Grade	Wt. (ppf)	TopMD (ft)	BtmMD (ft)
CASING JOINT(S)	13.375	H-40	48.00	14.0	324.0
GUIDE SHOE	13.375			324.0	325.0

INTERMEDIATE CASING — Report Date: 12/3/1978 00:00

Item	OD (in)	Grade	Wt. (ppf)	TopMD (ft)	BtmMD (ft)
CASING JOINT(S)	9.625	N-80	40.00	14.0	3,201.0
GUIDE SHOE	9.625			3,201.0	3,202.2

PRODUCTION CASING — Report Date: 12/30/1978 00:00

Item	OD (in)	Grade	Wt. (ppf)	TopMD (ft)	BtmMD (ft)
CASING JOINT(S)	7.000	K-55	26.00	14.0	78.8
CASING JOINT(S)	7.000	K-55	23.00	78.8	5,296.9
CASING JOINT(S)	7.000	K-55	26.00	5,296.9	6,691.7
FLAG JOINT	7.000	K-55	26.00	6,691.7	6,709.6
CASING JOINT(S)	7.000	K-55	26.00	6,709.6	8,102.4
FLOAT COLLAR	7.000		26.00	8,102.4	8,103.8
CASING JOINT(S)	7.000	K-55	26.00	8,103.8	8,143.9
FLOAT SHOE	7.000		26.00	8,143.9	8,146.0

Well: 371-2G S/T/R: 2G/31S/24E

CASING CEMENT DETAIL
- - -
Sfc Csg. Cmt Vol.: 361 cf
Hole Size: 17.5"
Top Job: No
Rtns to Sfc: 20 cf
TOC: Sfc
- - -

Interm Csg. Cmt Vol.: 2030 cf
Hole Size: 12.25"
Top Job: No
Rtns to Sfc: 35 cf
TOC: Sfc
- - -

Prod. Csg. Cmt Vol.: 2690 cf
Hole Size: 8.75"
Top Job: No
Rtns to Sfc:
TTOC: Sfc

Liner Cmt Vol.:
Hole Size:
Top Job:
Rtns to Sfc:
TTOC:
- - -
Top of Formation:
UBA: 7441'
BLW: 8080'

Volume Behind Pipe:
1.3 Yield Assumed
Theoretical Calculations (TTOC)

OCCIDENTAL OF ELK HILLS INC

371-3G

Event: WELL MAINT - RIG
Event End: 5/10/2006 00:00
Sec. Reason: LOW PRODUCTION

Ground Elev: 983.0ft
KB to Ground: 18.0ft
Datum: ORIGINAL KB @ 1,001.00ft (default)
API No.: 0402968500

Wellbore: ORIGINAL HOLE
Top TMD: 18.0ft
PBMD: 7,070.0ft
Btm TMD: 8,026.0ft
Spud Date: 3/4/1983 00:00
BH Coord X: 6,149,654.70uss ft BH Coord Y: 2,286,490.70uss

Casing Shoes (ft) | Schematic (6/1/2006) | Openings Top/Btm/Type/Status

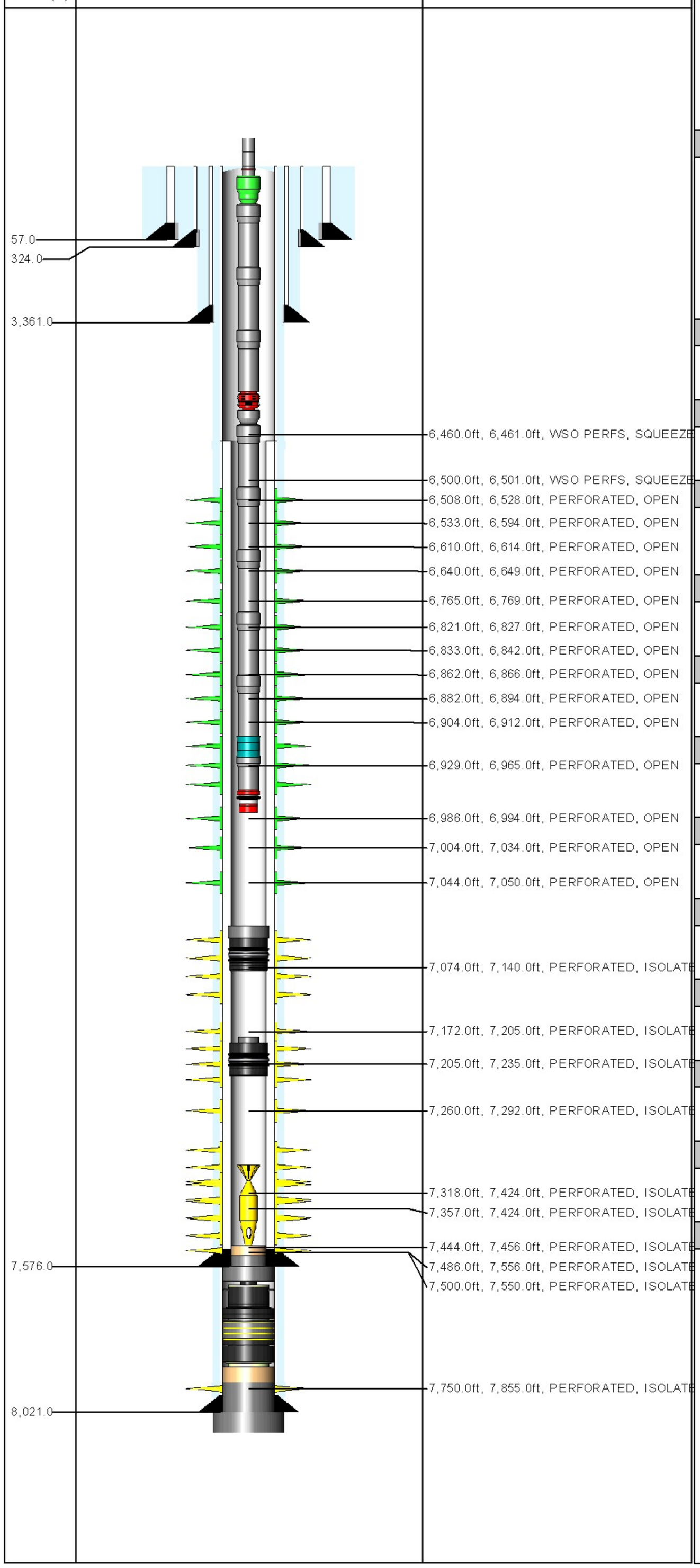

ROD STRING Report Date: 5/10/2006 00:00

Component	Top MD (ft)	Btm MD (ft)
POLROD	0.0	30.0
PNYROD	30.0	32.0
ROD	32.0	2,552.0
ROD	2,552.0	5,672.0
R-4PER	5,672.0	6,932.0
RSTBAR	6,932.0	6,936.0
INSPMP	6,936.0	6,960.0

TUBING STRING Report Date: 1/4/2006 00:00

Component	Top MD (ft)	Btm MD (ft)
TH-DBB	18.0	18.6
FATNIP	18.6	19.3
TBGJNT	19.3	6,238.1
AC	6,238.1	6,240.5
XO	6,240.5	6,241.1
TBGJNT	6,241.1	6,929.1
STNIP	6,929.1	6,929.9
TBGJNT	6,929.9	6,957.9
GASANC	6,957.9	6,988.0

PLUG BACK Report Date: 12/23/2005 00:00

Component	Top MD (ft)	Btm MD (ft)
CEMENT	7,070.0	7,080.0

PLUG BACK Report Date: 12/23/2005 00:00

Component	Top MD (ft)	Btm MD (ft)
BP-DR	7,080.0	7,082.0

PLUG BACK Report Date: 12/15/2005 00:00

Component	Top MD (ft)	Btm MD (ft)
CEMENT	7,199.0	7,209.0
BP-DR	7,209.0	7,211.0

PLUG BACK Report Date: 9/25/2000 00:00

Component	Top MD (ft)	Btm MD (ft)
JUNK	7,350.0	7,425.0

PLUG BACK Report Date: 9/14/2000 00:00

Component	Top MD (ft)	Btm MD (ft)
FILL	7,425.0	7,574.0

PLUG BACK Report Date: 10/28/1996 00:00

Component	Top MD (ft)	Btm MD (ft)
CEMENT	7,574.0	7,576.0

PLUG BACK Report Date: 10/26/1996 00:00

Component	Top MD (ft)	Btm MD (ft)
CEMENT	7,576.0	7,584.0

PLUG BACK Report Date: 10/26/1996 00:00

Component	Top MD (ft)	Btm MD (ft)
BP-PRM	7,584.0	7,586.0

PLUG BACK Report Date: 10/26/1996 00:00

Component	Top MD (ft)	Btm MD (ft)
FILL	7,586.0	7,706.0

PLUG BACK Report Date: 8/17/1983 00:00

Component	Top MD (ft)	Btm MD (ft)
CEMENT	7,706.0	7,925.0

PLUG BACK Report Date: 5/15/1983 00:00

Component	Top MD (ft)	Btm MD (ft)
CEMENT	7,925.0	8,021.0

PLUG BACK Report Date: 4/10/1983 00:00

Component	Top MD (ft)	Btm MD (ft)
CEMENT	8,021.0	8,026.0

CONDUCTOR CASING Report Date: 3/4/1983 00:00

Item Description	Btm MD(ft)
CASING JOINT(S) 20 in,	57.0

SURFACE CASING Report Date: 3/16/1983 00:00

Item Description	Btm MD(ft)
CASING JOINT(S) 13.375 in, , H-40, 48	324.0

INTERMEDIATE CASING Report Date: 3/21/1983 00:00

Item Description	Btm MD (ft)
CASING JOINT(S) 9.625 in, , K-55, 40	3,361.0

PRODUCTION CASING Report Date: 4/10/1983 00:00

Item Description	Btm MD (ft)
CASING JOINT(S) 7 in, , N-80, 26	77.4
CASING JOINT(S) 7 in, , K-55, 23	5,096.3
CASING JOINT(S) 7 in, , K-55, 26	6,486.3
FLAG JOINT 7 in, , K-55, 26	6,504.9
CASING JOINT(S) 7 in, , K-55, 26	6,743.1
CASING JOINT(S) 7 in, , N-80, 26	7,975.8
FLOAT COLLAR 7 in, , N-80, 26	7,978.2
CASING JOINT(S) 7 in, , N-80, 26	8,018.9
FLOAT SHOE 7 in, , N-80, 26	8,021.0

INNER LINER Report Date: 10/26/1996 00:00

Item Description	Btm MD (ft)
LINER HANGER 7 in, , P-110, 18	6,499.7
CASING JOINT(S) 5 in, , P-110, 18	7,573.8
FLOAT COLLAR 5 in, , P-110, 18	7,575.1
GUIDE SHOE 5 in, , P-110, 18	7,576.0

S/T/R: 371-3G 3G/31S/24E

CASING CEMENT DETAIL
- - -
Sfc Csg. Cmt Vol.: 413cf
Hole Size: 17-1/2"
Top Job:
Rtns to Sfc: Yes
TOC: sfc
- - -
Int. Csg. Cmt Vol.: 1575cf
Hole Size: 12-1/4"
Top Job:
Rtns to Sfc: Yes
TOC: sfc
- - -
Prod Csg. Cmt Vol.: 1730cf
Hole Size: 8-3/4"
Rtns to Sfc: none
TTOC: sfc
- - -
Liner Cmt Vol.: 123.5 cf
Hole Size: 6-1/8"
Rtns to Sfc: none
TTOC: TOL

Top of Formation:
UBA: 7050'
BLW: 7560'

Volume Behind Pipe
1.3 Yield Assumed on
Theoretical Calculations

OCCIDENTAL OF ELK HILLS INC

371-4G

Event: WELL MAINT - RIG
Event End: 12/22/2005 00:00
Sec. Reason: SANDED

Ground Level: 1,135.0ft
Datum: ORIGINAL KB @ 1,149.00ft (default)
API No.: 0402953633

Wellbore: ORIGINAL HOLE
PBMD: 7,368.0ft
Btm TMD: 7,486.0ft
Spud Date: 8/23/1976 00:00
BH Coord X: 6,144,236.40uss ft
BH Coord Y: 2,286,343.40uss ft

Casing Shoes (ft)

Schematic (1/1/2006)

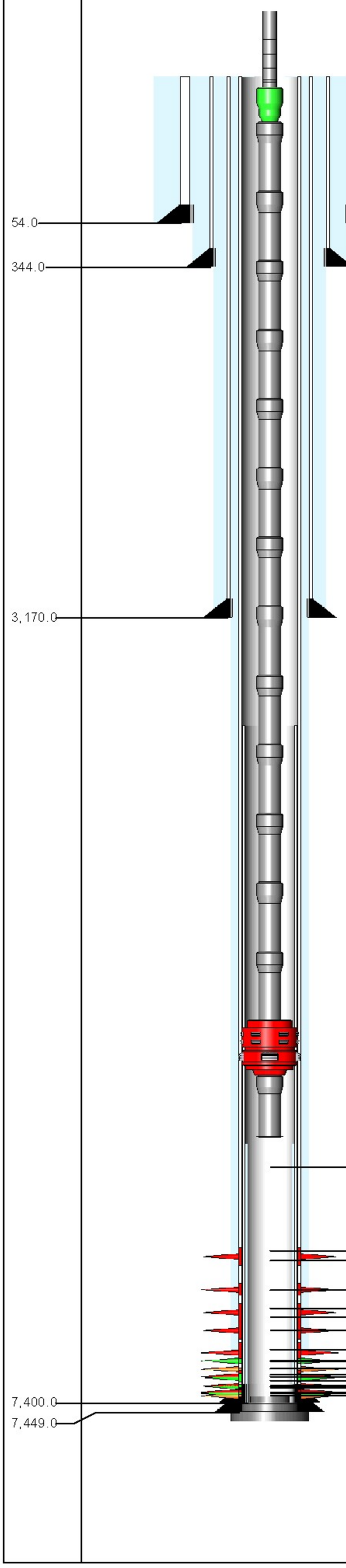

Openings Top/Btm/Type/Status

6,145.0ft, 6,146.0ft, WSO PERFS, SQUEEZE
6,576.0ft, 6,606.0ft, PERFORATED, ABANDO
6,616.0ft, 6,670.0ft, PERFORATED, ABANDO
6,768.0ft, 6,830.0ft, PERFORATED, ABANDO
6,872.0ft, 6,920.0ft, PERFORATED, ABANDO
6,932.0ft, 6,953.0ft, PERFORATED, ABANDO
6,963.0ft, 7,064.0ft, PERFORATED, ABANDO
7,078.0ft, 7,152.0ft, PERFORATED, ABANDO
7,162.0ft, 7,190.0ft, PERFORATED, ABANDO
7,165.0ft, 7,190.0ft, PERFORATED, OPEN
7,217.0ft, 7,218.0ft, PERFORATED, SQUEEZ
7,245.0ft, 7,255.0ft, PERFORATED, OPEN
7,230.0ft, 7,290.0ft, PERFORATED, ABANDO
7,270.0ft, 7,290.0ft, PERFORATED, OPEN
7,305.0ft, 7,308.0ft, PERFORATED, OPEN
7,302.0ft, 7,322.0ft, PERFORATED, ABANDO
7,317.0ft, 7,320.0ft, PERFORATED, OPEN
7,333.0ft, 7,354.0ft, PERFORATED, ABANDO
7,345.0ft, 7,352.0ft, PERFORATED, OPEN
7,359.0ft, 7,360.0ft, PERFORATED, SQUEEZ

ROD STRING Report Date: 12/22/2005 00:00

Component	Top MD (ft)	Btm MD (ft)
POLROD	0.0	30.0
PNYROD	30.0	32.0
ROD	32.0	1,562.0
ROD	1,562.0	3,512.0
ROD	3,512.0	5,342.0
ROD	5,342.0	5,942.0
RSTBAR	5,942.0	5,946.0
INSPMP	5,946.0	5,976.0

TUBING STRING Report Date: 12/22/2005 00:00

Component	Top MD (ft)	Btm MD (ft)
TH-DBB	14.0	14.7
FATNIP	14.7	15.4
TBGJNT	15.4	5,917.1
AC	5,917.1	5,919.4
TBGJNT	5,919.4	5,982.3
STNIP	5,982.3	5,983.4
PUPJNT	5,983.4	5,989.5

PLUG BACK Report Date: 7/6/1998 00:00

Component	Top MD (ft)	Btm MD (ft)
CEMENT	7,368.0	7,400.0

PLUG BACK Report Date: 7/5/1998 00:00

Component	Top MD (ft)	Btm MD (ft)
CEMENT	7,400.0	7,407.0

PLUG BACK Report Date: 10/19/1976 00:00

Component	Top MD (ft)	Btm MD (ft)
CEMENT	7,407.0	7,449.0

PLUG BACK Report Date: 10/17/1976 00:00

Component	Top MD (ft)	Btm MD (ft)
CEMENT	7,449.0	7,500.0

CONDUCTOR CASING Report Date: 8/23/1976 00:00

Item	OD (in)	Grade	Wt. (ppf)	TopMD (ft)	BtmMD (ft)
CASING JOINT(S)	20.000			14.0	54.0

SURFACE CASING Report Date: 9/25/1976 00:00

Item	OD (in)	Grade	Wt. (ppf)	TopMD (ft)	BtmMD (ft)
CASING JOINT(S)	13.375	H-40	48.00	14.0	344.0

INTERMEDIATE CASING Report Date: 10/1/1976 00:00

Item	OD (in)	Grade	Wt. (ppf)	TopMD (ft)	BtmMD (ft)
CASING JOINT(S)	9.625	K-55	40.00	14.0	3,170.0

PRODUCTION CASING Report Date: 10/17/1976 00:00

Item	OD (in)	Grade	Wt. (ppf)	TopMD (ft)	BtmMD (ft)
CASING JOINT(S)	7.000	K-55	26.00	14.0	79.6
CASING JOINT(S)	7.000	K-55	23.00	79.6	5,085.5
CASING JOINT(S)	7.000	K-55	26.00	5,085.5	6,183.8
FLAG JOINT	7.000	K-55	26.00	6,183.8	6,197.9
CASING JOINT(S)	7.000	K-55	26.00	6,197.9	7,406.7
FLOAT COLLAR	7.000	K-55	26.00	7,406.7	7,408.6
CASING JOINT(S)	7.000	K-55	26.00	7,408.6	7,446.6
GUIDE SHOE	7.000	K-55	26.00	7,446.6	7,449.0

INNER LINER Report Date: 7/5/1998 00:00

Item	OD (in)	Grade	Wt. (ppf)	TopMD (ft)	BtmMD (ft)
LINER HANGER	6.125			6,008.7	6,025.2
CROSSOVER	6.125			6,025.2	6,025.8
CASING JOINT(S)	5.000	L-80	18.00	6,025.8	7,399.2
GUIDE SHOE	5.000			7,399.2	7,400.0

Well: 371-4G S/T/R: 4G/30S/24E

CASING CEMENT DETAIL
- - -
Sfc Csg. Cmt Vol. (cf): 362
Hole Size (in.): 17.5
Top Job: no
Rtns to Sfc (cf): 0
TTOC (ft): sfc
- - -

Interm Csg. Cmt Vol. (cf): 1603
Hole Size (in.): 12.25
Top Job: no
Rtns to Sfc (cf): 0
TTOC (ft): sfc
- - -

Prod. Csg. Cmt Vol. (cf): 2100
Hole Size (in.): 8.75
Top Job: no
Rtns to Sfc (cf): 0
TTOC (ft): sfc

Liner Cmt Vol. (cf):
Hole Size (in.):
Top Job:
Rtns to Sfc (cf):
TOC (ft):
- - -
Top of Formation:
UBA: 6870'
BLW: 7432'

Volume Behind Pipe:
1.3 Yield Assumed
Theoretical Calculations (TTOC)

OCCIDENTAL OF ELK HILLS INC

372-4G

Event: WELL MAINT - RIGLESS
Event End: 5/14/2007 00:00
Sec. Reason:

Ground Level: 1,081.5ft
Datum: ORIGINAL KB @ 1,101.50ft (default)
API No.: 0403016902

Wellbore: ORIGINAL HOLE
PBMD: 7,561.0ft
Btm TMD: 7,681.0ft
Spud Date: 10/26/2000 00:00
BH Coord X: 6,144,491.32uss ft
BH Coord Y: 2,285,855.88uss ft

Casing Shoes (ft) | Schematic (6/1/2007) | Openings Top/Btm/Type/Status

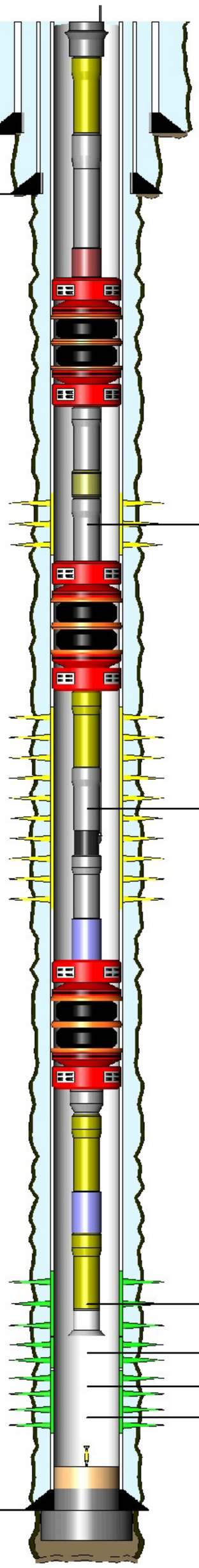

60.0
998.0
7,670.0

6,986.0ft, 7,044.0ft, PERFORATED, ISOLATE
7,060.0ft, 7,200.0ft, PERFORATED, ISOLATE
7,226.0ft, 7,242.0ft, PERFORATED, OPEN
7,250.0ft, 7,282.0ft, PERFORATED, OPEN
7,321.0ft, 7,334.0ft, PERFORATED, OPEN
7,338.0ft, 7,376.0ft, PERFORATED, OPEN

TUBING STRING Report Date: 11/18/2002 00:00

Component	Top MD (ft)	Btm MD (ft)
TH-SGL	20.0	20.6
PUPJNT	20.6	56.2
TBGJNT	56.2	6,879.0
ON-OFF	6,879.0	6,880.4
PKR-S	6,880.4	6,884.5
TBGJNT	6,884.5	6,979.2
GLM-D	6,979.2	6,987.6
TBGJNT	6,987.6	7,050.1
PKR-S	7,050.1	7,055.6
PUPJNT	7,055.6	7,075.9
TBGJNT	7,075.9	7,137.9
INJM-D	7,137.9	7,146.3
TBGJNT	7,146.3	7,208.8
NOGO-O	7,208.8	7,209.4
PKR-S	7,209.4	7,214.7
XO	7,214.7	7,215.3
PUPJNT	7,215.3	7,221.5
NOGO-O	7,221.5	7,222.9
PUPJNT	7,222.9	7,229.0
BELCOL	7,229.0	7,229.5

PLUG BACK Report Date: 5/6/2004 00:00

Component	Top MD (ft)	Btm MD (ft)
JUNK	7,534.0	7,537.0

PLUG BACK Report Date: 8/5/2003 00:00

Component	Top MD (ft)	Btm MD (ft)
FILL	7,537.0	7,561.4

PLUG BACK Report Date: 12/13/2000 00:00

Component	Top MD (ft)	Btm MD (ft)
CEMENT	7,561.4	7,670.0

PLUG BACK Report Date: 11/16/2000 00:00

Component	Top MD (ft)	Btm MD (ft)
CEMENT	7,670.0	7,674.0

CONDUCTOR CASING Report Date: 10/18/2000 00:00

Item	OD (in)	Grade	Wt. (ppf)	TopMD (ft)	BtmMD (ft)
CASING JOINT(S)	14.000			20.0	60.0

SURFACE CASING Report Date: 10/27/2000 00:00

Item	OD (in)	Grade	Wt. (ppf)	TopMD (ft)	BtmMD (ft)
CASING JOINT(S)	9.625	K-55	36.00	20.0	996.9
GUIDE SHOE	9.625			996.9	998.0

PRODUCTION CASING Report Date: 11/16/2000 00:00

Item	OD (in)	Grade	Wt. (ppf)	TopMD (ft)	BtmMD (ft)
CASING JOINT(S)	7.000	L-80	26.00	20.0	7,574.2
FLOAT COLLAR	7.000			7,574.2	7,576.5
CASING JOINT(S)	7.000	L-80	26.00	7,576.5	7,668.2
FLOAT SHOE	7.000			7,668.2	7,670.0

Well: 372-4G S/T/R: 4G/30S/24E

CASING CEMENT DETAIL
- - -
Sfc Csg. Cmt Vol. (cf): 554
Hole Size (in.): 12.25
Top Job: no
Rtns to Sfc (cf): 22
TOC (ft): sfc
- - -

Interm Csg. Cmt Vol. (cf):
Hole Size (in.):
Top Job:
Rtns to Sfc (cf):
TOC (ft):
- - -

Prod. Csg. Cmt Vol. (cf): 1615
Hole Size (in.): 8.75
Top Job: no
Rtns to Sfc (cf): not recorded
TTOC (ft): sfc

Liner Cmt Vol. (cf):
Hole Size (in.):
Top Job:
Rtns to Sfc (cf):
TOC (ft):
- - -
Top of Formation:
UBA: 6985'
BLW: 7561'

Volume Behind Pipe:
1.3 Yield Assumed
Theoretical Calculations (TTOC)

OCCIDENTAL OF ELK HILLS INC

372X-4G

Event: WELL MAINT - RIG
Event End: 8/3/2009 00:00
Sec. Reason:

Ground Level: 1,063.3ft
Datum: ORIGINAL KB @ 1,083.30ft (default)
API No.: 0403025187

Wellbore: ORIGINAL HOLE
PBMD: 7,572.0ft
Btm TMD: 7,621.0ft
Spud Date: 7/14/2004 00:00
BH Coord X: 6,144,713.46uss ft
BH Coord Y: 2,285,467.52uss ft

Casing Shoes (ft) | Schematic (8/3/2009) | Openings Top/Btm/Type/Status

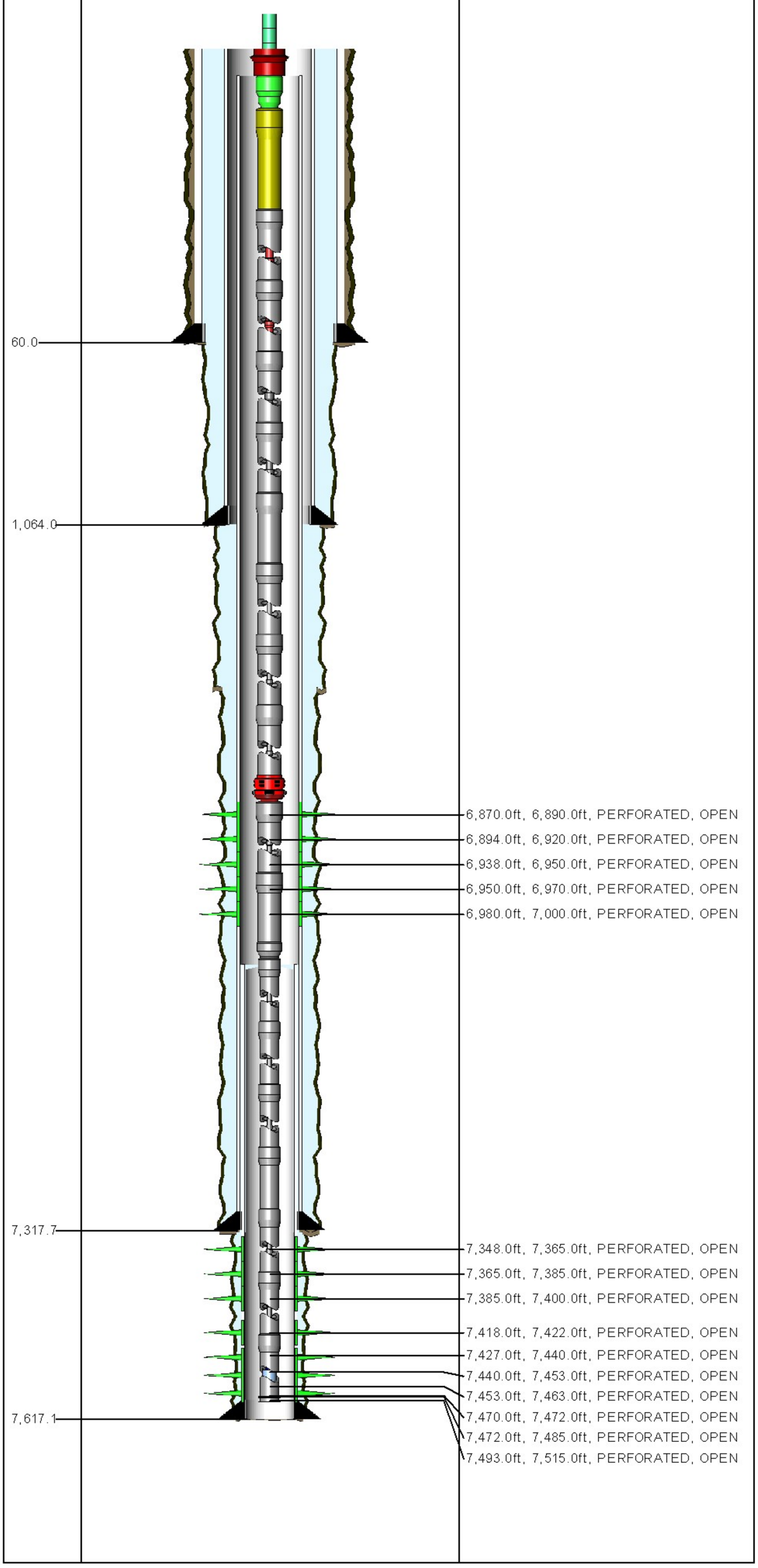

ROD STRING Report Date: 7/30/2009 00:00

Component	Top MD (ft)	Btm MD (ft)
POLRDL	0.0	36.0
PNYROD	36.0	38.0
PNYROD	38.0	42.0
PNYROD	42.0	46.0
PNYROD	46.0	52.0
PNYROD	52.0	58.0
R-4PER	58.0	1,888.0
R-4PER	1,888.0	3,898.0
R-4PER	3,898.0	7,078.0
R-4PER	7,078.0	7,438.0
RSTBAR	7,438.0	7,442.0
INSPMP	7,442.0	7,466.0

TUBING STRING Report Date: 7/29/2009 00:00

Component	Top MD (ft)	Btm MD (ft)
TH-DBB	20.0	21.0
FATNIP	21.0	21.7
PUPJNT	21.7	29.7
CAS	29.7	6,845.0
AC	6,845.0	6,847.4
CAS	6,847.4	7,130.3
XO	7,130.3	7,131.4
CAS	7,131.4	7,477.6
STNIP	7,477.6	7,478.7
CAS	7,478.7	7,510.4
STCOLL	7,510.4	7,510.8

CONDUCTOR CASING Report Date: 6/23/2004 00:00

em	OD (in)	Grade	Wt. (ppf)	TopMD (ft)	BtmMD (ft
ASING JOINT(S)	16.000			20.0	60.0

SURFACE CASING Report Date: 7/16/2004 00:00

em	OD (in)	Grade	Wt. (ppf)	TopMD (ft)	BtmMD (ft
ASING JOINT(S)	9.625	K-55	36.00	20.0	995.7
	9.625			995.7	995.7
ASING JOINT(S)	9.625	K-55	36.00	995.7	1,063.1
UIDE SHOE	9.625			1,063.1	1,064.0

INTERMEDIATE CASING Report Date: 8/5/2004 00:00

em	OD (in)	Grade	Wt. (ppf)	TopMD (ft)	BtmMD (ft
ANDING COLLAR	7.000			21.0	22.0
UP JOINT	7.000	N-80	26.00	22.0	24.3
ASING JOINT(S)	7.000	N-80	26.00	24.3	68.5
UP JOINT	7.000	N-80	26.00	68.5	88.5
ASING JOINT(S)	7.000	N-80	26.00	88.5	5,614.4
TAGE COLLAR	7.000	N-80	26.00	5,614.4	5,616.5
ASING JOINT(S)	7.000	N-80	26.00	5,616.5	7,223.3
LOAT COLLAR	7.000			7,223.3	7,224.2
ASING JOINT(S)	7.000	N-80	26.00	7,224.2	7,316.4
LOAT SHOE	7.000			7,316.4	7,317.6

LINER Report Date: 8/9/2004 00:00

em	OD (in)	Grade	Wt. (ppf)	TopMD (ft)	BtmMD (ft
NER HANGER PACKER	5.210			7,158.7	7,171.7
EAL NIPPLE	5.550			7,171.7	7,174.4
NER HANGER	6.003			7,174.4	7,180.3
ROSSOVER	5.505			7,180.3	7,181.8
ASING JOINT(S)	5.000	N-80	15.00	7,181.8	7,572.3
	5.000			7,572.3	7,572.4
ASING JOINT(S)	5.000	N-80	15.00	7,572.4	7,616.6
LOAT COLLAR	5.500			7,616.6	7,617.1

Well: 372X-4G S/T/R: 4G/30S/24E

CASING CEMENT DETAIL
- - -
Sfc Csg. Cmt Vol. (cf): 676
Hole Size (in.): 12.25
Top Job: no
Rtns to Sfc (cf): yes
TOC (ft): sfc
- - -

Interm Csg. Cmt Vol. (cf): 451.5 (1st satge)
Hole Size (in.): 8.75
2nd stage: 1426 cf
Rtns to Sfc (cf): not recorded
TTOC (ft): sfc
- - -

Prod. Csg. Cmt Vol. (cf):
Hole Size (in.):
Top Job:
Rtns to Sfc (cf):
TOC (ft):

Liner Cmt Vol. (cf): 115.6
Hole Size (in.): 6.125
Top Job: no
Rtns to Sfc (cf): not recorded
TTOC (ft): 5923
- - -
Top of Formation:
UBA: 7015'
BLW: 7568'

Volume Behind Pipe:
1.3 Yield Assumed
Theoretical Calculations (TTOC)

OCCIDENTAL OF ELK HILLS INC

373-33S

Event: WELL MAINT - RIGLESS
Event End: 2/20/2008 00:00
Sec. Reason:
End Status: FINISHED - SUCCESS
Well Classification: DEVELOPMENT

Ground Level: 846.0ft
Datum: ORIGINAL KB @ 860.00ft (default)
API No.: 0402961120

Wellbore: ST1
PBMD: 7,715.0ft
Btm TMD: 7,805.0ft
Spud Date: 2/5/1980 00:00
BH Coord X: 6,144,675.91uss ft
BH Coord Y: 2,290,103.53uss ft

Casing Shoes (ft)	Schematic (3/1/2008)	Openings Top/Btm/Type/Status

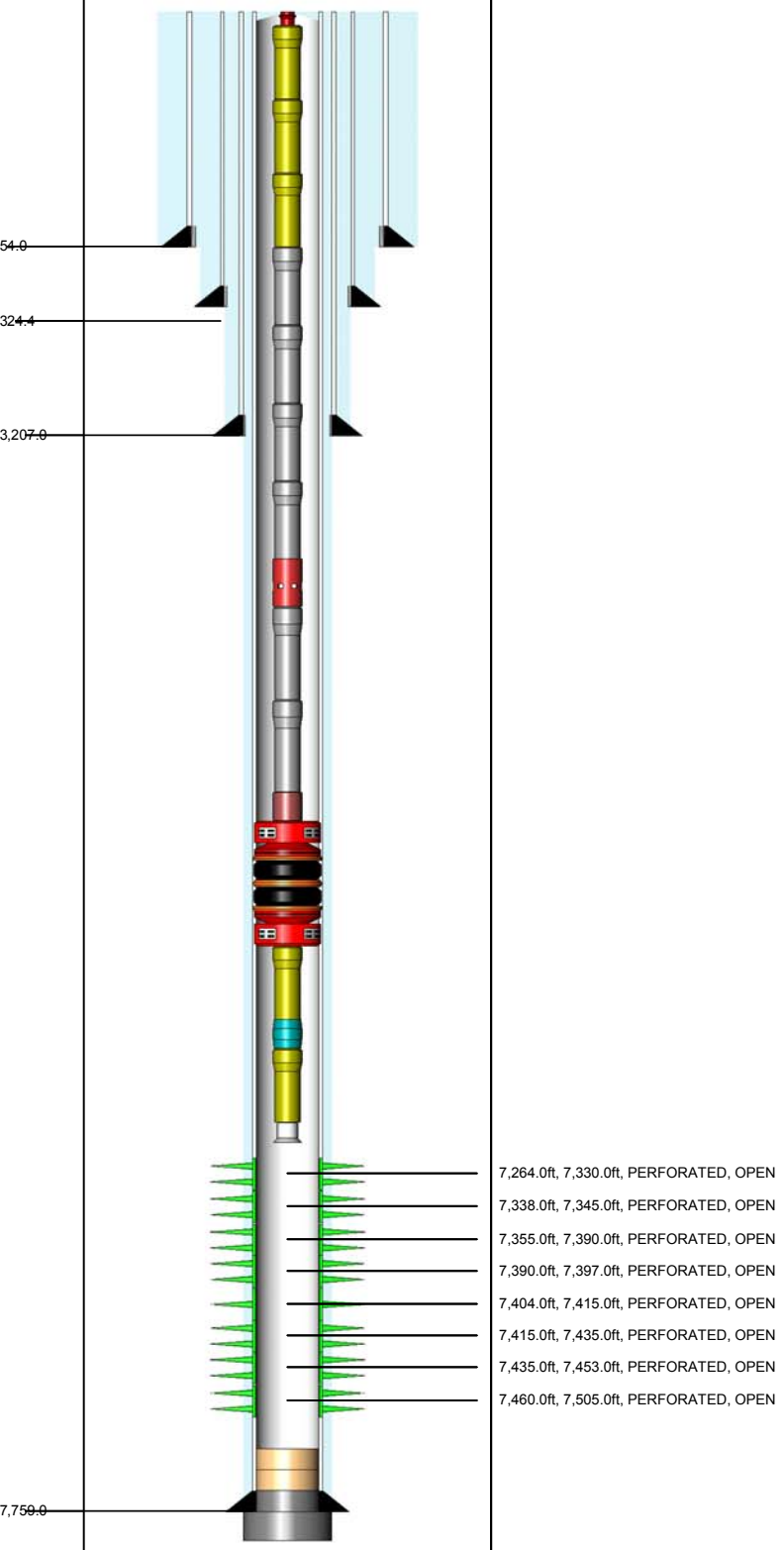

ROD STRING Report Date: 6/20/2003 00:00

Component	Top MD (ft)	Btm MD (ft)
POLROD	10.0	40.0
ROD	40.0	2,470.0
ROD	2,470.0	7,450.0
INSPMP	7,450.0	

TUBING STRING Report Date: 3/5/2004 00:00

Component	Top MD (ft)	Btm MD (ft)
TH-DBB	14.0	14.6
PUPJNT	14.6	16.3
PUPJNT	16.3	24.4
PUPJNT	24.4	34.4
TBGJNT	34.4	7,062.7
SS-C	7,062.7	7,067.0
TBGJNT	7,067.0	7,098.4
ON-OFF	7,098.4	7,099.8
PKR-S	7,099.8	7,104.0
PUPJNT	7,104.0	7,114.0
PNIP-O	7,114.0	7,115.4
PUPJNT	7,115.4	7,125.4
BELCOL	7,125.4	7,125.9

PLUG BACK Report Date: 5/19/2005 00:00

Component	Top MD (ft)	Btm MD (ft)
FILL	7,592.0	7,595.0

PLUG BACK Report Date: 5/20/2004 00:00

Component	Top MD (ft)	Btm MD (ft)
FILL	7,595.0	7,715.0

PLUG BACK Report Date: 6/25/1980 00:00

Component	Top MD (ft)	Btm MD (ft)
CEMENT	7,715.0	7,759.0

PLUG BACK Report Date: 5/7/1980 00:00

Component	Top MD (ft)	Btm MD (ft)
CEMENT	7,759.0	7,805.0

CONDUCTOR CASING Report Date: 2/5/1980 00:00

Item	OD (in)	Grade	Wt. (ppf)	TopMD (ft)	BtmMD (ft)
CASING JOINT(S)	20.000			14.0	54.0

SURFACE CASING Report Date: 4/2/1980 00:00

Item	OD (in)	Grade	Wt. (ppf)	TopMD (ft)	BtmMD (ft)
CASING JOINT(S)	13.375	H-40	48.00	14.0	321.6
GUIDE SHOE	13.375			321.6	323.0

INTERMEDIATE CASING Report Date: 4/10/1980 00:00

Item	OD (in)	Grade	Wt. (ppf)	TopMD (ft)	BtmMD (ft)
CASING JOINT(S)	9.625	K-55	40.00	14.0	3,206.0
GUIDE SHOE	9.625			3,206.0	3,207.0

PRODUCTION CASING Report Date: 5/7/1980 00:00

Item	OD (in)	Grade	Wt. (ppf)	TopMD (ft)	BtmMD (ft)
CASING JOINT(S)	7.000	N-80	26.00	14.0	80.2
CASING JOINT(S)	7.000	N-80	23.00	80.2	6,616.6
CASING JOINT(S)	7.000	N-80	26.00	6,616.6	6,907.2
FLAG JOINT	7.000	N-80	26.00	6,907.2	6,925.4
CASING JOINT(S)	7.000	N-80	26.00	6,925.4	7,715.3
FLOAT COLLAR	7.000	N-80	26.00	7,715.3	7,717.2
CASING JOINT(S)	7.000	N-80	26.00	7,717.2	7,756.9
FLOAT SHOE	7.000	N-80	26.00	7,756.9	7,759.0

Well: 373-33S S/T/R: 33S/30S/24E

CASING CEMENT DETAIL
- - -
Sfc Csg. Cmt Vol.: 450 cf
Hole Size: 17.5"
Top Job: no
Rtns to Sfc: 45 cf
TOC: sfc
- - -

Interm Csg. Cmt Vol.: 1530 cf
Hole Size: 12.25"
Top Job: 400 sks
Rtns to Sfc: no
TOC: sfc
- - -

Prod. Csg. Cmt Vol.: 2590 cf
Hole Size: 8.75"
Top Job: no
Rtns to Sfc: no
TTOC: sfc
- - -

Liner Cmt Vol.:
Hole Size:
Top Job:
Rtns to Sfc :
TTOC:
- - -
Top of Formation:
UBA: 7258'
BLW: 7636'

Volume Behind Pipe:
1.3 Yield Assumed
Theoretical Calculations (TTOC)

OCCIDENTAL OF ELK HILLS INC

373-34S

Event: WELL MAINT - RIGLESS
Event End:
Sec. Reason:
End Status: FINISHED - SUCCESS
Well Classification: INJECTION

Ground Level: 772.0ft
Datum: ORIGINAL KB @ 786.00ft (default)
API No.: 0402960226

Wellbore: ORIGINAL HOLE
PBMD: 7,410.0ft
Btm TMD: 7,893.9ft
Spud Date: 10/17/1979 00:00
BH Coord X: 6,149,616.40uss ft
BH Coord Y: 2,290,006.40uss ft

Casing Shoes (ft)	Schematic (1/1/2007)	Openings Top/Btm/Type/Status

7,168.0ft, 7,245.0ft, PERFORATED, OPEN
7,270.0ft, 7,330.0ft, PERFORATED, OPEN
7,355.0ft, 7,460.0ft, PERFORATED, OPEN

TUBING STRING — Report Date: 3/27/2003 00:00

Component	Top MD (ft)	Btm MD (ft)
TH-DBB	14.0	14.6
FATNIP	14.6	15.3
PUPJNT	15.3	41.4
TBGJNT	41.4	7,026.8
SS	7,026.8	7,029.6
TBGJNT	7,029.6	7,061.0
SA	7,061.0	7,063.4

PACKER ASSEMBLY (RETRIEVABLE) — Report Date: 1/25/1986 00:00

Component	Top MD (ft)	Btm MD (ft)
PKR-S	7,063.4	7,069.5
PUPJNT	7,069.5	7,079.6
PNIP-O	7,079.6	7,080.7
PUPJNT	7,080.7	7,087.0
WLREG	7,087.0	7,087.6

PLUG BACK — Report Date: 4/27/2005 00:00

Component	Top MD (ft)	Btm MD (ft)
FILL	7,619.0	7,640.0

PLUG BACK — Report Date: 9/21/2004 00:00

Component	Top MD (ft)	Btm MD (ft)
FILL	7,640.0	7,726.0

PLUG BACK — Report Date: 2/3/2004 00:00

Component	Top MD (ft)	Btm MD (ft)
FILL	7,726.0	7,825.0

PLUG BACK — Report Date: 12/5/1979 00:00

Component	Top MD (ft)	Btm MD (ft)
CEMENT	7,825.0	7,890.0

PLUG BACK — Report Date: 11/30/1979 00:00

Component	Top MD (ft)	Btm MD (ft)
CEMENT	7,890.0	7,900.0

CONDUCTOR CASING — Report Date: 10/17/1979 00:00

Item	OD (in)	Grade	Wt. (ppf)	TopMD (ft)	BtmMD (ft)
CASING JOINT(S)	20.000			14.0	54.0

SURFACE CASING — Report Date: 11/4/1979 00:00

Item	OD (in)	Grade	Wt. (ppf)	TopMD (ft)	BtmMD (ft)
CASING JOINT(S)	13.375	H-40	48.00	14.0	313.9
GUIDE SHOE	13.375			313.9	315.0

INTERMEDIATE CASING — Report Date: 11/8/1979 00:00

Item	OD (in)	Grade	Wt. (ppf)	TopMD (ft)	BtmMD (ft)
CASING JOINT(S)	9.625	K-55	40.00	14.0	3,098.8
GUIDE SHOE	9.625			3,098.8	3,100.0

PRODUCTION CASING — Report Date: 11/30/1979 00:00

Item	OD (in)	Grade	Wt. (ppf)	TopMD (ft)	BtmMD (ft)
CASING JOINT(S)	7.000	K-55	26.00	14.0	75.0
CASING JOINT(S)	7.000	K-55	23.00	75.0	5,057.4
CASING JOINT(S)	7.000	K-55	26.00	5,057.4	6,402.9
FLAG JOINT	7.000	K-55	26.00	6,402.9	6,425.2
CASING JOINT(S)	7.000	K-55	26.00	6,425.2	7,847.0
FLOAT COLLAR	7.000	K-55	26.00	7,847.0	7,848.4
CASING JOINT(S)	7.000	K-55	26.00	7,848.4	7,888.2
FLOAT SHOE	7.000	K-55	26.00	7,888.2	7,890.4

Well: 373-34S S/T/R: 34S/30S/24E

CASING CEMENT DETAIL
- - -
Sfc Csg. Cmt Vol.: 500 cf
Hole Size: 17-1/2" (13-3/8" Casing)
Top Job: NO
Rtns to Sfc: YES
TTOC: NA
- - -

Interm Csg. Cmt Vol.: 1554 cf
Hole Size: 12-1/4" (9-5/8" Casing)
Top Job: NO
Rtns to Sfc: NO
TTOC: Surface
- - -

Prod. Csg. Cmt Vol.: 2440 cf
Hole Size: 8-3/4" (7" Casing)
Top Job: NO
Rtns to Sfc: NO
TTOC: Surface
- - -

Liner Cmt Vol.: NONE
Hole Size:
Top Job:
Rtns to Sfc:
TTOC:
- - -
Top of Formation:
UBA: 7166'
BLW: 7550'

Volume Behind Pipe:
1.3 Yield Assumed
Theoretical Calculations (TTOC)

OCCIDENTAL OF ELK HILLS INC

373-3G

Event: WELL ENHANCEMENT
Event End: 1/18/2007 00:00
Sec. Reason:

Ground Elev: 907.0ft
KB to Ground: 12.0ft
Datum: ORIGINAL KB @ 919.00ft (default)
API No.: 0402953241

Wellbore: ORIGINAL HOLE
Top TMD: 12.0ft
PBMD: 7,036.0ft
Btm TMD: 8,000.0ft
Spud Date: 12/5/1975 00:00
BH Coord X: 6,149,713.80uss ft BH Coord Y: 2,285,206.70uss

Casing Shoes (ft)

52.0
305.0
3,237.0
7,860.0

Schematic (1/18/2007)

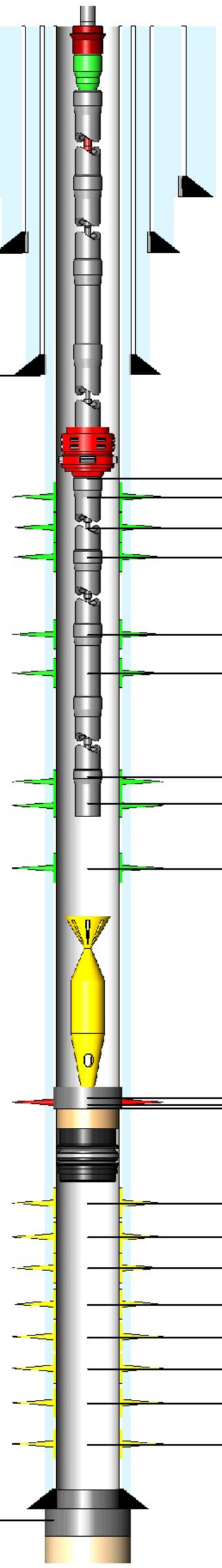

Openings Top/Btm/Type/Status

6,480.0ft, 6,481.0ft, WSO PERFS, SQUEEZ
6,594.0ft, 6,624.0ft, PERFORATED, OPEN
6,629.0ft, 6,650.0ft, PERFORATED, OPEN
6,650.0ft, 6,679.0ft, PERFORATED, OPEN
6,867.0ft, 6,871.0ft, PERFORATED, OPEN
6,904.0ft, 6,908.0ft, PERFORATED, OPEN
6,928.0ft, 6,942.0ft, PERFORATED, OPEN
6,948.0ft, 6,960.0ft, PERFORATED, OPEN
6,989.0ft, 7,006.0ft, PERFORATED, OPEN
7,206.0ft, 7,306.0ft, PERFORATED, ABAND
7,330.0ft, 7,450.0ft, PERFORATED, ABAND
7,450.0ft, 7,500.0ft, PERFORATED, ABAND
7,557.0ft, 7,570.0ft, PERFORATED, ISOLAT
7,585.0ft, 7,590.0ft, PERFORATED, ISOLAT
7,595.0ft, 7,600.0ft, PERFORATED, ISOLAT
7,623.0ft, 7,628.0ft, PERFORATED, ISOLAT
7,638.0ft, 7,643.0ft, PERFORATED, ISOLAT
7,650.0ft, 7,655.0ft, PERFORATED, ISOLAT
7,670.0ft, 7,675.0ft, PERFORATED, ISOLAT
7,710.0ft, 7,780.0ft, PERFORATED, ISOLAT

ROD STRING Report Date: 1/16/2007 00:00

Component	Top MD (ft)	Btm MD (ft)
POLROD	0.0	30.0
PNYROD	30.0	40.0
ROD	40.0	2,800.0
ROD	2,800.0	6,580.0
R-4PER	6,580.0	6,910.0
R-3PER	6,910.0	6,920.0
INSPMP	6,920.0	6,946.0

TUBING STRING Report Date: 1/15/2007 00:00

Component	Top MD (ft)	Btm MD (ft)
TH-DBB	12.0	12.6
FATNIP	12.6	13.2
CAS	13.2	6,395.7
AC	6,395.7	6,398.1
CAS	6,398.1	6,926.9
STNIP	6,926.9	6,928.0
CAS	6,928.0	6,959.4

PLUG BACK Report Date: 11/22/2005 00:00

Component	Top MD (ft)	Btm MD (ft)
JUNK	7,016.0	7,036.0

PLUG BACK Report Date: 4/28/2001 00:00

Component	Top MD (ft)	Btm MD (ft)
CEMENT	7,036.0	7,500.0

PLUG BACK Report Date: 7/14/2000 00:00

Component	Top MD (ft)	Btm MD (ft)
FILL	7,500.0	7,530.0

PLUG BACK Report Date: 8/31/1987 00:00

Component	Top MD (ft)	Btm MD (ft)
BP-DR	7,530.0	7,533.0

PLUG BACK Report Date: 10/28/1976 00:00

Component	Top MD (ft)	Btm MD (ft)
CEMENT	7,802.0	7,859.0

PLUG BACK Report Date: 10/24/1976 00:00

Component	Top MD (ft)	Btm MD (ft)
CEMENT	7,859.0	7,869.0
MUD	7,869.0	8,000.0

CONDUCTOR CASING Report Date: 12/5/1975 00:00

Item Description	Btm MD(ft)
CASING JOINT(S) 20 in,	52.0

SURFACE CASING Report Date: 9/24/1976 00:00

Item Description	Btm MD (ft)
CASING JOINT(S) 13.375 in, , H-40, 48	303.8
GUIDE SHOE 13.375 in,	305.0

INTERMEDIATE CASING Report Date: 9/30/1976 00:00

Item Description	Btm MD (ft)
CASING JOINT(S) 9.625 in, , K-55, 40	3,236.0
GUIDE SHOE 9.625 in,	3,237.0

PRODUCTION CASING Report Date: 10/24/1976 00:00

Item Description	Btm MD (ft)
CASING JOINT(S) 7 in, , K-55, 26	34.0
CASING JOINT(S) 7 in, , N-80, 26	75.0
CASING JOINT(S) 7 in, , K-55, 23	4,921.3
CASING JOINT(S) 7 in, , K-55, 26	7,139.3
FLAG JOINT 7 in, , K-55, 26	7,153.2
CASING JOINT(S) 7 in, , K-55, 26	7,807.1
FLOAT COLLAR 7 in, , K-55, 26	7,809.0
CASING JOINT(S) 7 in, , K-55, 26	7,856.6
FLOAT SHOE 7 in, , K-55, 26	7,859.0

Well: 373-3G S/T/R: 3G/31S/24E

CASING CEMENT DETAIL
- - -
Sfc Csg. Cmt Vol.: 390cf
Hole Size: 17.5"
Top Job:
Rtns to Sfc: Trace
TOC: Sfc
- - -

Interm Csg. Cmt Vol.: 1387cf
Hole Size: 12.25"
Top Job:
Rtns to Sfc: Yes
TOC: Sfc
- - -

Prod. Csg. Cmt Vol.: 2250cf
Hole Size: 8.75"
Top Job:
Rtns to Sfc: No
TTOC: Sfc
- - -

Liner Cmt Vol.:
Hole Size:
Top Job:
Rtns to Sfc:
TOC:
- - -

Top of Formation:
UBA: 7202'
BLW: 7785'

Volume Behind Pipe
1.15 Yield Assumed on
Theoretical Calculations (T)

OCCIDENTAL OF ELK HILLS INC

373-4G

Event: WELL MAINT - RIGLESS
Event End:
Sec. Reason:

Ground Level: 1,050.0ft
Datum: ORIGINAL KB @ 1,064.00ft (default)
API No.: 0402952246

Wellbore: ORIGINAL HOLE
PBMD: 6,625.0ft
Btm TMD: 7,660.0ft
Spud Date: 1/28/1976 00:00
BH Coord X: 6,144,313.00uss ft
BH Coord Y: 2,285,111.50uss ft

Casing Shoes (ft) | Schematic (5/1/2009) | Openings Top/Btm/Type/Status

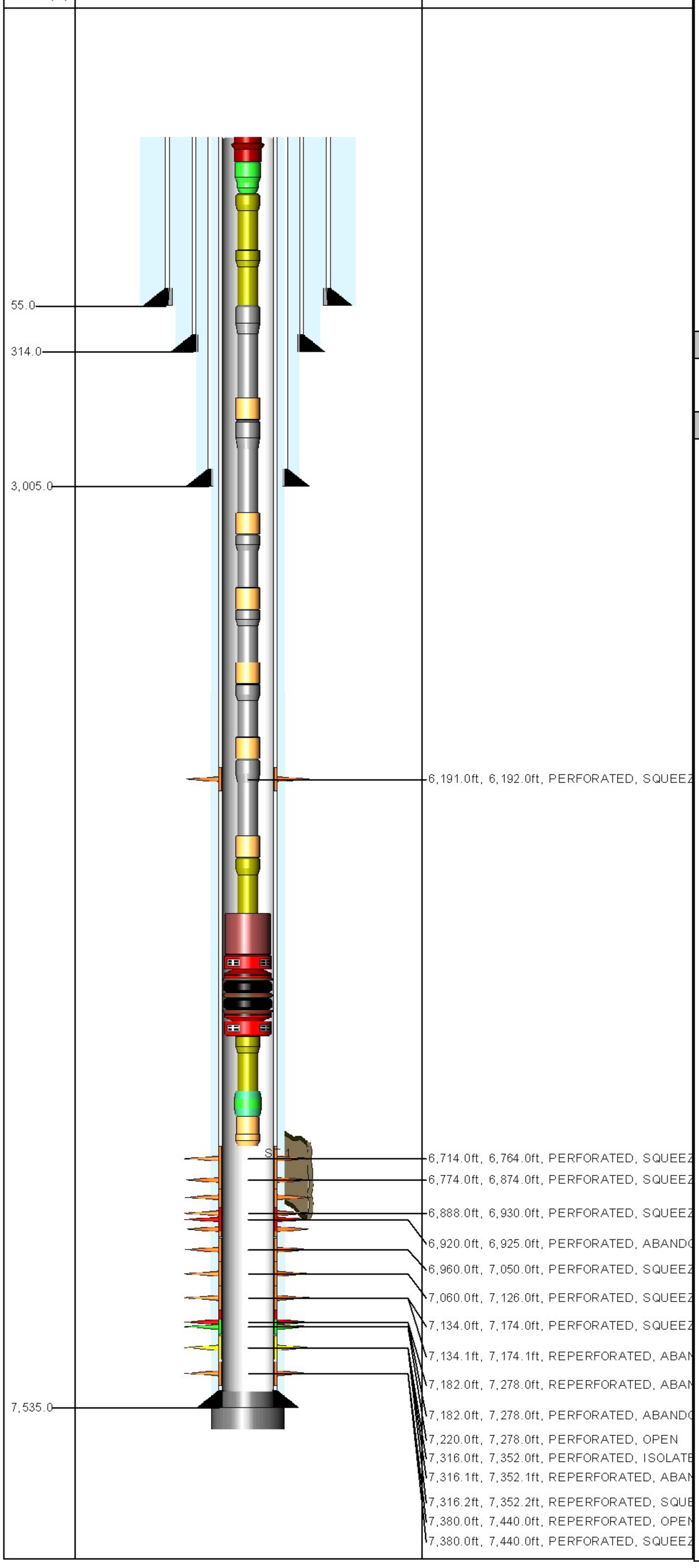

TUBING STRING Report Date: 10/10/2004 00:00

Component	Top MD (ft)	Btm MD (ft)
TH-DBB	14.0	14.7
FATNIP	14.7	15.4
PUPJNT	15.4	23.5
PUPJNT	23.5	31.8
TBGJNT	31.8	2,184.9
GAUMDL	2,184.9	2,193.4
TBGJNT	2,193.4	3,803.1
GAUMDL	3,803.1	3,811.6
TBGJNT	3,811.6	4,898.7
GAUMDL	4,898.7	4,907.5
TBGJNT	4,907.5	5,592.2
GAUMDL	5,592.2	5,601.0
TBGJNT	5,601.0	6,098.6
GAUMDL	6,098.6	6,107.4
TBGJNT	6,107.4	6,631.6
GAUMDL	6,631.6	6,640.0
PUPJNT	6,640.0	6,648.1
ON-OFF	6,648.1	6,649.5
PKR-S	6,649.5	6,653.6
PUPJNT	6,653.6	6,659.8
LNDNIP	6,659.8	6,661.2
WLREG	6,661.2	6,661.7

PLUG BACK Report Date: 5/2/1976 00:00

Component	Top MD (ft)	Btm MD (ft)
CEMENT	7,488.0	7,535.0

PLUG BACK Report Date: 5/1/1976 00:00

Component	Top MD (ft)	Btm MD (ft)
CEMENT	7,535.0	7,666.0

CONDUCTOR CASING Report Date: 1/28/1976 00:00

Item	OD (in)	Grade	Wt. (ppf)	TopMD (ft)	BtmMD (ft)
CASING JOINT(S)	20.000			14.0	55.0

SURFACE CASING Report Date: 4/7/1976 00:00

Item	OD (in)	Grade	Wt. (ppf)	TopMD (ft)	BtmMD (ft)
CASING JOINT(S)	13.375	K-55	54.50	14.0	312.7
FLOAT SHOE	13.375			312.7	314.0

INTERMEDIATE CASING Report Date: 4/11/1976 00:00

Item	OD (in)	Grade	Wt. (ppf)	TopMD (ft)	BtmMD (ft)
CASING JOINT(S)	9.625	K-55	40.50	14.0	3,003.8
FLOAT SHOE	9.625			3,003.8	3,005.0

PRODUCTION CASING Report Date: 5/1/1976 00:00

Item	OD (in)	Grade	Wt. (ppf)	TopMD (ft)	BtmMD (ft)
CASING JOINT(S)	7.000	K-55	26.00	14.0	77.6
CASING JOINT(S)	7.000	K-55	23.00	77.6	4,794.6
CASING JOINT(S)	7.000	K-55	26.00	4,794.6	6,852.2
FLAG JOINT	7.000	K-55	26.00	6,852.2	6,870.4
CASING JOINT(S)	7.000	K-55	26.00	6,870.4	7,488.3
FLOAT COLLAR	7.000		26.00	7,488.3	7,490.3
CASING JOINT(S)	7.000	K-55	26.00	7,490.3	7,534.0
FLOAT SHOE	7.000		26.00	7,534.0	7,535.0

Well: 373-4G S/T/R: 4G/30S/24E
Last Well Status: P&A

CASING CEMENT DETAIL
- - -
Sfc Csg. Cmt Vol. (cf): 537
Hole Size (in.): 17.5
Top Job: no
Rtns to Sfc (cf): 10
TOC (ft): sfc
- - -

Interm Csg. Cmt Vol. (cf): 1502
Hole Size (in.): 12.25
Top Job: no
Rtns to Sfc (cf): 260
TOC (ft): sfc
- - -

Prod. Csg. Cmt Vol. (cf): 2000
Hole Size (in.): 8.75
Top Job: no
Rtns to Sfc (cf): 188
TOC (ft): sfc

Liner Cmt Vol. (cf):
Hole Size (in.):
Top Job:
Rtns to Sfc (cf):
TOC (ft):
- - -
Top of Formation:
UBA: 6985'
BLW: 7536'

Volume Behind Pipe:
1.3 Yield Assumed
Theoretical Calculations (TTOC)

OCCIDENTAL OF ELK HILLS INC

373-4G-RD1

Event: WELL MAINT - RIGLESS
Event End:
Sec. Reason:

Ground Level: 1,050.0ft
Datum: ORIGINAL KB @ 1,064.00ft (default)
API No.: 0402952246

Wellbore: ST 1
PBMD: 7,470.0ft
Btm TMD: 7,675.0ft
Spud Date: 1/28/1976 00:00
BH Coord X: 6,144,277.49uss ft
BH Coord Y: 2,285,094.17uss ft

Casing Shoes (ft) | Schematic (5/1/2009) | Openings Top/Btm/Type/Status

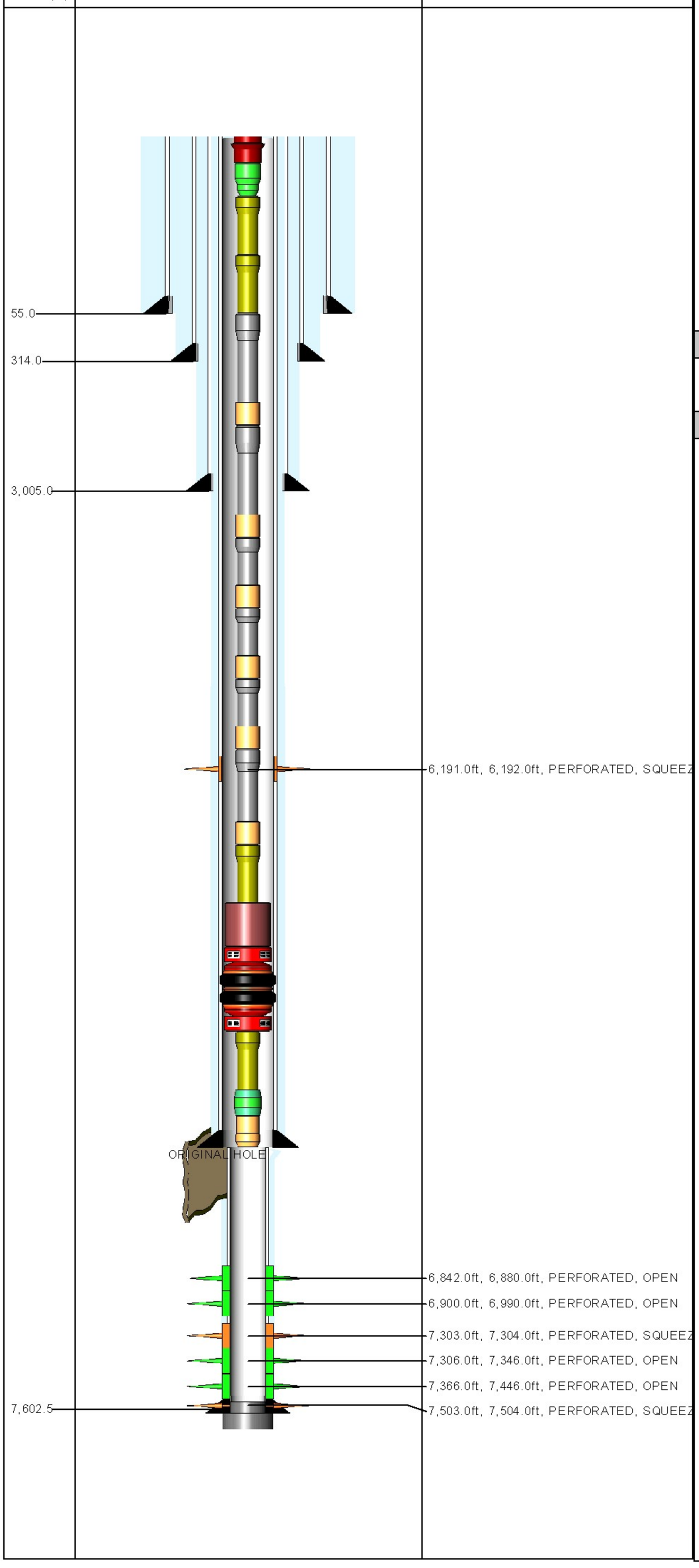

TUBING STRING Report Date: 10/10/2004 00:00

Component	Top MD (ft)	Btm MD (ft)
TH-DBB	14.0	14.7
FATNIP	14.7	15.4
PUPJNT	15.4	23.5
PUPJNT	23.5	31.8
TBGJNT	31.8	2,184.9
GAUMDL	2,184.9	2,193.4
TBGJNT	2,193.4	3,803.1
GAUMDL	3,803.1	3,811.6
TBGJNT	3,811.6	4,898.7
GAUMDL	4,898.7	4,907.5
TBGJNT	4,907.5	5,592.2
GAUMDL	5,592.2	5,601.0
TBGJNT	5,601.0	6,098.6
GAUMDL	6,098.6	6,107.4
TBGJNT	6,107.4	6,631.6
GAUMDL	6,631.6	6,640.0
PUPJNT	6,640.0	6,648.1
ON-OFF	6,648.1	6,649.5
PKR-S	6,649.5	6,653.6
PUPJNT	6,653.6	6,659.8
LNDNIP	6,659.8	6,661.2
WLREG	6,661.2	6,661.7

PLUG BACK Report Date: 9/3/1992 00:00

Component	Top MD (ft)	Btm MD (ft)
CEMENT	7,470.0	7,603.0

PLUG BACK Report Date: 7/23/1992 00:00

Component	Top MD (ft)	Btm MD (ft)
CEMENT	7,603.0	7,675.0

CONDUCTOR CASING Report Date: 1/28/1976 00:00

Item	OD (in)	Grade	Wt. (ppf)	TopMD (ft)	BtmMD (ft)
CASING JOINT(S)	20.000			14.0	55.0

SURFACE CASING Report Date: 4/7/1976 00:00

Item	OD (in)	Grade	Wt. (ppf)	TopMD (ft)	BtmMD (ft)
CASING JOINT(S)	13.375	K-55	54.50	14.0	312.7
FLOAT SHOE	13.375			312.7	314.0

INTERMEDIATE CASING Report Date: 4/11/1976 00:00

Item	OD (in)	Grade	Wt. (ppf)	TopMD (ft)	BtmMD (ft)
CASING JOINT(S)	9.625	K-55	40.50	14.0	3,003.8
FLOAT SHOE	9.625			3,003.8	3,005.0

PRODUCTION CASING Report Date: 5/1/1976 00:00

Item	OD (in)	Grade	Wt. (ppf)	TopMD (ft)	BtmMD (ft)
CASING JOINT(S)	7.000	K-55	26.00	14.0	77.6
CASING JOINT(S)	7.000	K-55	23.00	77.6	4,794.6
CASING JOINT(S)	7.000	K-55	26.00	4,794.6	6,852.2
FLAG JOINT	7.000	K-55	26.00	6,852.2	6,870.4
CASING JOINT(S)	7.000	K-55	26.00	6,870.4	7,488.3
FLOAT COLLAR	7.000		26.00	7,488.3	7,490.3
CASING JOINT(S)	7.000	K-55	26.00	7,490.3	7,534.0
FLOAT SHOE	7.000		26.00	7,534.0	7,535.0

LINER Report Date: 7/23/1992 00:00

Item	OD (in)	Grade	Wt. (ppf)	TopMD (ft)	BtmMD (ft)
TIE BACK	5.000	N-80	18.00	6,692.0	6,707.5
PBR	6.276	N-80	18.00	6,707.5	6,717.6
LINER HANGER	6.276	N-80	18.00	6,717.6	6,726.7
CASING JOINT(S)	5.000	N-80	18.00	6,726.7	7,560.4
FLOAT COLLAR	5.000			7,560.4	7,562.5
CASING JOINT(S)	5.000	N-80	18.00	7,562.5	7,601.0
FLOAT SHOE	5.000			7,601.0	7,603.0

Well: 373-4G-RD1 S/T/R: 4G/30S/24E

CASING CEMENT DETAIL
- - -
Sfc Csg. Cmt Vol. (cf): 537
Hole Size (in.): 17.5
Top Job: no
Rtns to Sfc (cf): 10
TOC (ft): sfc
- - -

Interm Csg. Cmt Vol. (cf): 1502
Hole Size (in.): 12.25
Top Job: no
Rtns to Sfc (cf): 260
TOC (ft): sfc
- - -

Prod. Csg. Cmt Vol. (cf): 2000
Hole Size (in.): 8.75
Top Job: no
Rtns to Sfc (cf): 188
TOC (ft): sfc

Liner Cmt Vol. (cf): 270
Hole Size (in.):6.125
Top Job: no
Rtns to Sfc (cf): 0
TTOC (ft): 3648
- - -
Top of Formation:
UBA: 6999'
BLW: 7539'

Volume Behind Pipe:
1.3 Yield Assumed
Theoretical Calculations (TTOC)

OCCIDENTAL OF ELK HILLS INC

373A-3G

Event: WELL ENHANCEMENT
Event End:
Sec. Reason:

Ground Elev: 904.0ft
KB to Ground: 0.0ft
Datum: ORIGINAL KB @ 918.00ft (default)
API No.: 0402966051

Wellbore: ORIGINAL HOLE
Top TMD: 0.0ft
PBMD: 7,621.0ft
Btm TMD: 7,778.0ft
Spud Date: 11/21/1981 00:00
BH Coord X: 6,149,903.04uss ft BH Coord Y: 2,285,909.67uss

Casing Shoes (ft) | Schematic (8/5/2009) | Openings Top/Btm/Type/Status

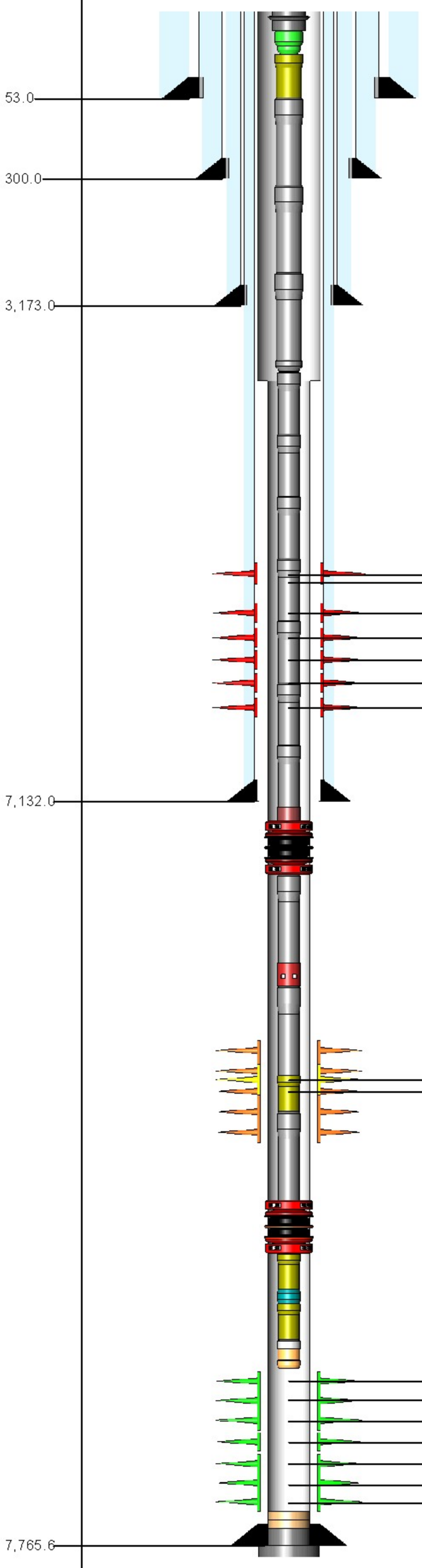

6,494.0ft, 6,495.0ft, PERFORATED, ABAND
6,492.0ft, 6,512.0ft, PERFORATED, ABAND
6,537.0ft, 6,640.0ft, PERFORATED, ABAND
6,687.0ft, 6,715.0ft, PERFORATED, ABAND
6,740.0ft, 6,810.0ft, PERFORATED, ABAND
6,835.0ft, 6,895.0ft, PERFORATED, ABAND
6,920.0ft, 7,010.0ft, PERFORATED, ABAND
7,242.0ft, 7,252.0ft, PERFORATED, ISOLAT
7,225.0ft, 7,265.0ft, PERFORATED, SQUEE
7,338.0ft, 7,344.0ft, PERFORATED, OPEN
7,348.0ft, 7,358.0ft, PERFORATED, OPEN
7,378.0ft, 7,386.0ft, PERFORATED, OPEN
7,406.0ft, 7,414.0ft, PERFORATED, OPEN
7,439.0ft, 7,444.0ft, PERFORATED, OPEN
7,460.0ft, 7,580.0ft, PERFORATED, OPEN
7,580.0ft, 7,600.0ft, PERFORATED, OPEN

TUBING STRING Report Date: 4/19/2002 00:00

Component	Top MD (ft)	Btm MD (ft)
TH-SGL	14.0	14.6
FATNIP	14.6	15.9
PUPJNT	15.9	29.9
TBGJNT	29.9	6,246.3
XO	6,246.3	6,247.4
TBGJNT	6,247.4	7,145.3
ON-OFF	7,145.3	7,146.4
PKR-S	7,146.4	7,151.7
TBGJNT	7,151.7	7,182.7
SS-C	7,182.7	7,186.7
TBGJNT	7,186.7	7,249.7
PUPJNT	7,249.7	7,253.9
TBGJNT	7,253.9	7,285.6
PKR-S	7,285.6	7,290.9
PUPJNT	7,290.9	7,298.9
PNIP-O	7,298.9	7,300.3
PUPJNT	7,300.3	7,308.3
BCSUB	7,308.3	7,308.6
WLREG	7,308.6	7,309.1

PLUG BACK Report Date: 5/22/2003 00:00

Component	Top MD (ft)	Btm MD (ft)
FILL	7,600.0	7,621.0

PLUG BACK Report Date: 4/18/2002 00:00

Component	Top MD (ft)	Btm MD (ft)
FILL	7,621.0	7,632.0

PLUG BACK Report Date: 6/10/2001 00:00

Component	Top MD (ft)	Btm MD (ft)
CEMENT	7,632.0	7,683.0

PLUG BACK Report Date: 11/13/2000 00:00

Component	Top MD (ft)	Btm MD (ft)
CEMENT	7,683.0	7,765.6

PLUG BACK Report Date: 10/19/2000 00:00

Component	Top MD (ft)	Btm MD (ft)
CEMENT	7,765.6	7,778.0

CONDUCTOR CASING Report Date: 11/21/1981 00:00

Item Description	Btm MD(ft)
CASING JOINT(S) 20 in,	53.0

SURFACE CASING Report Date: 12/15/1981 00:00

Item Description	Btm MD (ft)
CASING JOINT(S) 13.375 in, , H-40, 48	252.6
FLOAT COLLAR 13.375 in, , H-40, 48	252.6
CASING JOINT(S) 13.375 in, , H-40, 48	298.6
FLOAT SHOE 13.375 in, , H-40, 48	300.0

INTERMEDIATE CASING Report Date: 12/20/1981 00:00

Item Description	Btm MD (ft)
CASING JOINT(S) 9.625 in, , J, 36	3,126.9
FLOAT COLLAR 9.625 in, , J, 36	3,126.9
CASING JOINT(S) 9.625 in, , J, 36	3,172.0
FLOAT SHOE 9.625 in, , J, 36	3,173.0

PRODUCTION CASING Report Date: 1/4/1982 00:00

Item Description	Btm MD (ft)
CASING JOINT(S) 7 in, , N-80, 26	101.3
CASING JOINT(S) 7 in, , K-55, 23	4,975.0
CASING JOINT(S) 7 in, , K-55, 26	6,438.0
FLAG JOINT 7 in, , K-55, 26	6,456.1
CASING JOINT(S) 7 in, , K-55, 26	7,082.2
FLOAT COLLAR 7 in, , N-80, 26	7,084.3
CASING JOINT(S) 7 in, , N-80, 26	7,130.8
FLOAT SHOE 7 in, , N-80, 26	7,132.0

LINER Report Date: 10/19/2000 00:00

Item Description	Btm MD (ft)
LINER HANGER PACKER 6.276 in,	6,351.6
SEAL NIPPLE 6.276 in,	6,354.5
LINER HANGER 6.276 in,	6,361.0
CROSSOVER 6.276 in,	6,361.7
CASING JOINT(S) 5 in, , N-80, 18	7,682.8
LANDING COLLAR 5 in,	7,682.9
CASING JOINT(S) 5 in, , N-80, 18	7,723.5
INSERT FLOAT 5 in,	7,723.5
CASING JOINT(S) 5 in, , N-80, 18	7,765.1
GUIDE SHOE 5 in,	7,765.6

Well: 373A-3G S/T/R: 3G/31S/24E

CASING CEMENT DETAIL
- - -
Sfc Csg. Cmt Vol.: 600cf
Hole Size: 17.5"
Top Job:
Rtns to Sfc: Yes
TOC: Sfc
- - -

Interm Csg. Cmt Vol.: 1500cf
Hole Size: 12.5"
Top Job:
Rtns to Sfc: Yes
TOC: Sfc
- - -

Prod. Csg. Cmt Vol.: 1700cf
Hole Size: 8.75"
Top Job:
Rtns to Sfc: No
TTOC: Sfc
- - -

Liner Cmt Vol.: 176cf
Hole Size: 6.125"
Top Job:
Rtns to Sfc: Yes
TOC: TOL
- - -

Top of Formation:
UBA: 7090'
BLW: 7698'

Volume Behind Pipe
1.15 Yield Assumed on
Theoretical Calculations (T)

OCCIDENTAL OF ELK HILLS INC

373X-35S

Event: WELL MAINT - RIG
Event End: 12/1/2008 00:00
Sec. Reason: CORR HOLE IN PMP BBL

Ground Level: 609.9ft
Datum: ORIGINAL KB @ 631.90ft (default)
API No.: 0403025650

Wellbore: ORIGINAL HOLE
PBMD: 7,239.0ft
Btm TMD: 7,249.0ft
Spud Date: 9/19/2004 00:00
BH Coord X: 6,154,906.83uss ft
BH Coord Y: 2,289,561.14uss ft

Casing Shoes (ft)	Schematic (12/1/2008)	Openings Top/Btm/Type/Status

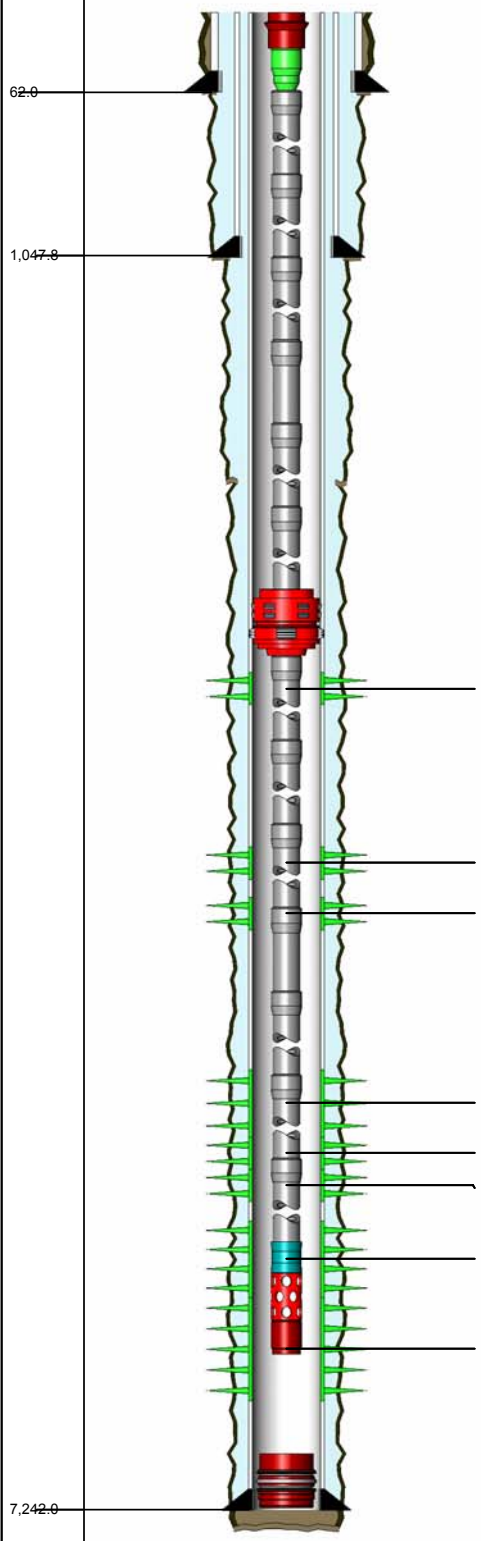

6,756.0ft, 6,832.0ft, PERFORATED, OPEN
6,981.0ft, 7,080.0ft, PERFORATED, OPEN
7,088.0ft, 7,112.0ft, PERFORATED, OPEN
7,150.0ft, 7,160.0ft, PERFORATED, OPEN
7,160.0ft, 7,173.0ft, PERFORATED, OPEN
7,173.0ft, 7,194.0ft, PERFORATED, OPEN
7,202.0ft, 7,214.0ft, PERFORATED, OPEN
7,214.0ft, 7,227.0ft, PERFORATED, OPEN

ROD STRING — Report Date: 12/1/2008 00:00

Component	Top MD (ft)	Btm MD (ft)
POLROD	0.0	36.0
R-4PER	36.0	4,326.0
ROD	4,326.0	6,636.0
R-4PER	6,636.0	7,176.0
RSTBAR	7,176.0	7,177.0
INSPMP	7,177.0	7,201.0

TUBING STRING — Report Date: 11/26/2008 00:00

Component	Top MD (ft)	Btm MD (ft)
TH-DBB	22.0	22.6
FATNIP	22.6	23.3
CAS	23.3	6,731.5
AC	6,731.5	6,733.9
CAS	6,733.9	7,210.8
STNIP	7,210.8	7,211.9
PERFJT	7,211.9	7,216.0
STCOLL	7,216.0	7,216.4

PLUG BACK — Report Date: 10/16/2004 00:00

Component	Top MD (ft)	Btm MD (ft)
BRP	7,239.0	7,241.0

CONDUCTOR CASING — Report Date: 9/17/2004 00:00

Item	OD (in)	Grade	Wt. (ppf)	TopMD (ft)	BtmMD (ft)
CASING JOINT(S)	14.000			22.0	62.0

SURFACE CASING — Report Date: 9/20/2004 00:00

Item	OD (in)	Grade	Wt. (ppf)	TopMD (ft)	BtmMD (ft)
CASING JOINT(S)	9.625	K-55	36.00	22.0	978.4
	9.625			978.4	978.4
CASING JOINT(S)	9.625	K-55	36.00	978.4	1,047.1
GUIDE SHOE	9.625			1,047.1	1,048.0

PRODUCTION CASING — Report Date: 10/3/2004 00:00

Item	OD (in)	Grade	Wt. (ppf)	TopMD (ft)	BtmMD (ft)
CASING JOINT(S)	7.000	K-55	23.00	22.0	2,810.8
CASING JOINT(S)	7.000	N-80	26.00	2,810.8	3,013.9
CASING JOINT(S)	7.000	P-110	26.00	3,013.9	6,525.4
FLAG JOINT	7.000	P-110	26.00	6,525.4	6,540.3
CASING JOINT(S)	7.000	P-110	26.00	6,540.3	7,151.0
FLOAT COLLAR	7.000			7,151.0	7,152.1
CASING JOINT(S)	7.000	P-110	26.00	7,152.1	7,241.0
FLOAT SHOE	7.000			7,241.0	7,242.0

Well: 373X-35S S/T/R: 35S/30S/24E

CASING CEMENT DETAIL
- - -
Sfc Csg. Cmt Vol.: 661 cf
Hole Size: 12.25
Top Job: no
Rtns to Sfc: 90 cf
TOC: sfc
- - -

Interm Csg. Cmt Vol.:
Hole Size:
Top Job:
Rtns to Sfc:
TOC:
- - -

Prod. Csg. Cmt Vol.: 1949 cf
Hole Size: 8.75
Top Job: no
Rtns to Sfc: 196 cf
TOC: sfc
- - -

Liner Cmt Vol.:
Hole Size:
Top Job:
Rtns to Sfc:
TOC:
- - -
Top of Formation:
UBA: N/A
BLW: N/A

Volume Behind Pipe:
1.3 Yield Assumed
Theoretical Calculations (TTOC)
JEP

OCCIDENTAL OF ELK HILLS INC

374-33S

Event: NOI - WORKOVER
Event End:
Sec. Reason:
End Status:
Well Classification: DEVELOPMENT

Ground Level: 858.0ft
Datum: ORIGINAL KB @ 876.00ft (default)
API No.: 0402967554

Wellbore: ST1
PBMD: 7,588.0ft
Btm TMD: 7,648.0ft
Spud Date: 9/1/1982 00:00
BH Coord X: 6,144,614.10uss ft
BH Coord Y: 2,289,635.81uss ft

Casing Shoes (ft) | Schematic (11/1/2007) | Openings Top/Btm/Type/Status

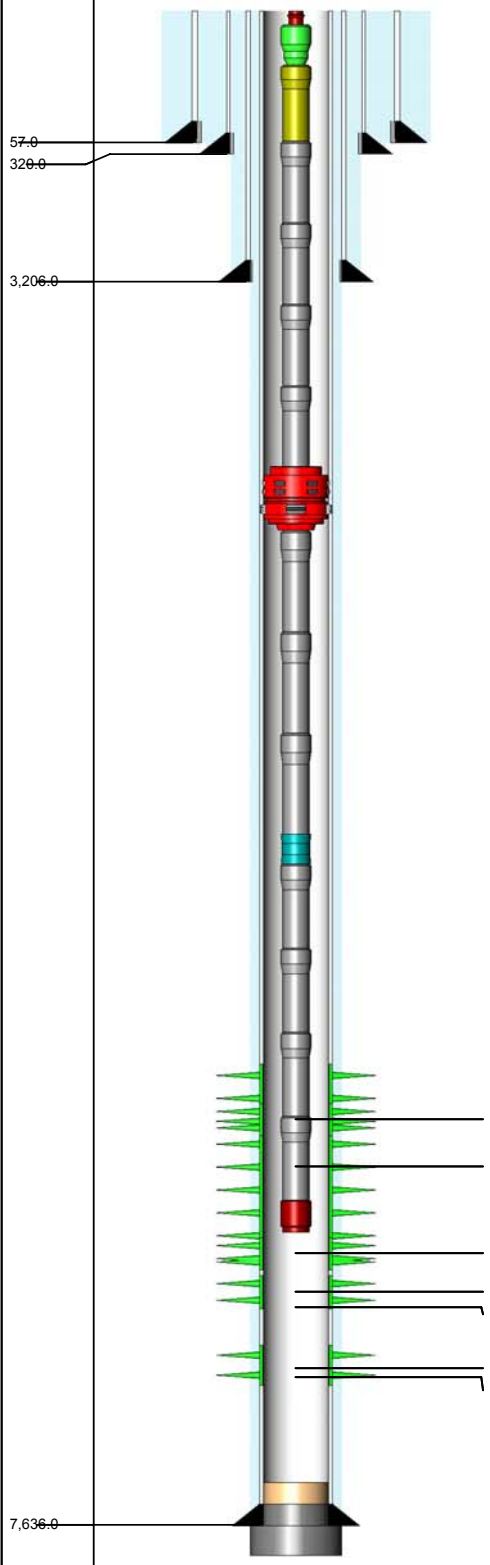

7,140.0ft, 7,145.0ft, PERFORATED, OPEN
7,136.0ft, 7,178.0ft, PERFORATED, OPEN
7,173.0ft, 7,178.0ft, PERFORATED, OPEN
7,204.0ft, 7,209.0ft, PERFORATED, OPEN
7,203.0ft, 7,250.0ft, PERFORATED, OPEN
7,280.0ft, 7,285.0ft, PERFORATED, OPEN
7,270.0ft, 7,315.0ft, PERFORATED, OPEN

ROD STRING Report Date: 10/16/2007 00:00

Component	Top MD (ft)	Btm MD (ft)
POLROD	0.0	30.0
ROD	30.0	3,090.0
ROD	3,090.0	6,000.0
R-4PER	6,000.0	7,110.0
RSTBAR	7,110.0	7,114.0
INSPMP	7,114.0	7,138.0

TUBING STRING Report Date: 5/16/2005 00:00

Component	Top MD (ft)	Btm MD (ft)
TH-DBB	18.0	18.7
FATNIP	18.7	19.3
PUPJNT	19.3	27.4
TBGJNT	27.4	6,898.5
AC	6,898.5	6,900.8
TBGJNT	6,900.8	7,114.6
STNIP	7,114.6	7,115.7
TBGJNT	7,115.7	7,146.5
STCOLL	7,146.5	7,147.0

PLUG BACK Report Date: 9/26/2003 00:00

Component	Top MD (ft)	Btm MD (ft)
FILL	7,574.0	7,588.0

PLUG BACK Report Date: 10/25/1982 00:00

Component	Top MD (ft)	Btm MD (ft)
CEMENT	7,588.0	7,636.0

PLUG BACK Report Date: 10/25/1982 00:00

Component	Top MD (ft)	Btm MD (ft)
CEMENT	7,636.0	7,648.0

CONDUCTOR CASING Report Date: 9/14/1982 00:00

Item	OD (in)	Grade	Wt. (ppf)	TopMD (ft)	BtmMD (ft)
CASING JOINT(S)	20.000			18.0	57.0

SURFACE CASING Report Date: 10/1/1982 00:00

Item	OD (in)	Grade	Wt. (ppf)	TopMD (ft)	BtmMD (ft)
CASING JOINT(S)	13.375	H-40	48.00	18.0	320.0

INTERMEDIATE CASING Report Date: 10/6/1982 00:00

Item	OD (in)	Grade	Wt. (ppf)	TopMD (ft)	BtmMD (ft)
CASING JOINT(S)	9.625	K-55	40.00	18.0	3,206.0

PRODUCTION CASING Report Date: 10/25/1982 00:00

Item	OD (in)	Grade	Wt. (ppf)	TopMD (ft)	BtmMD (ft)
CASING JOINT(S)	7.000	N-80	26.00	18.0	101.0
CASING JOINT(S)	7.000	K-55	23.00	101.0	4,702.0
CASING JOINT(S)	7.000	K-55	26.00	4,702.0	6,371.0
CASING JOINT(S)	7.000	N-80	26.00	6,371.0	6,541.6
FLAG JOINT	7.000	N-80	26.00	6,541.6	6,559.9
CASING JOINT(S)	7.000	N-80	26.00	6,559.9	7,636.0

Well: 374-33S S/T/R: 33S/30S/24E

CASING CEMENT DETAIL
- - -
Sfc Csg. Cmt Vol.: 500 cf
Hole Size: 17.5"
Top Job: no
Rtns to Sfc: 60 cf
TOC: sfc
- - -

Interm Csg. Cmt Vol.: 1400 cf
Hole Size: 10.25'
Top Job: no
Rtns to Sfc: 50 cf
TOC: sfc
- - -

Prod. Csg. Cmt Vol.: 1690'
Hole Size: 8.75"
Top Job: no
Rtns to Sfc: no
TTOC: sfc
- - -

Liner Cmt Vol.:
Hole Size:
Top Job:
Rtns to Sfc :
TTOC:
- - -
Top of Formation:
UBA: 7137'
BLW: 7536'

Volume Behind Pipe:
1.3 Yield Assumed
Theoretical Calculations (TTOC)

OCCIDENTAL OF ELK HILLS INC

374-34S

Event: WELL MAINT - RIG
Event End:
Sec. Reason:
End Status:
Well Classification: DEVELOPMENT

Ground Level: 749.0ft
Datum: ORIGINAL KB @ 762.00ft (default)
API No.: 0402965773

Wellbore: ORIGINAL HOLE
PBMD: 5,988.0ft
Btm TMD: 7,425.0ft
Spud Date: 11/16/1981 00:00
BH Coord X: 6,149,868.00uss ft
BH Coord Y: 2,289,355.00uss ft

Casing Shoes (ft)

Schematic (8/31/2009)

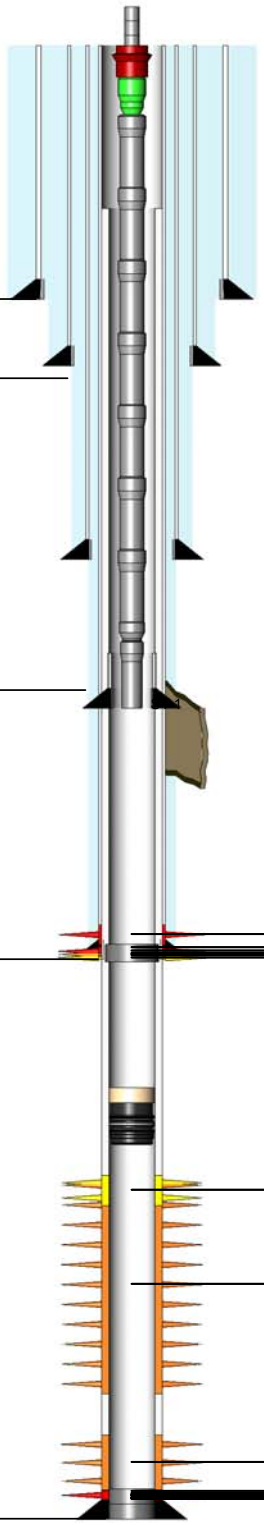

Openings Top/Btm/Type/Status

6,371.0ft, 6,461.0ft, PERFORATED, ABANDONED
6,502.0ft, 6,551.0ft, PERFORATED, ABANDONED
6,578.0ft, 6,620.0ft, PERFORATED, ABANDONED
6,653.0ft, 6,663.0ft, PERFORATED, SQUEEZED
6,645.0ft, 6,713.0ft, PERFORATED, ABANDONED
6,679.0ft, 6,691.0ft, PERFORATED, SQUEEZED
6,699.0ft, 6,707.0ft, PERFORATED, SQUEEZED
6,728.0ft, 6,785.0ft, PERFORATED, ISOLATED

6,876.0ft, 6,886.0ft, PERFORATED, ISOLATED
6,876.0ft, 6,897.0ft, PERFORATED, SQUEEZED
6,907.0ft, 6,955.0ft, PERFORATED, SQUEEZED
6,975.0ft, 7,004.0ft, PERFORATED, ABANDONED
7,027.0ft, 7,066.0ft, PERFORATED, ABANDONED
7,074.0ft, 7,075.0ft, PERFORATED, ABANDONED
7,082.0ft, 7,083.0ft, PERFORATED, ABANDONED
7,090.0ft, 7,091.0ft, PERFORATED, ABANDONED
7,098.0ft, 7,099.0ft, PERFORATED, ABANDONED
7,104.0ft, 7,109.0ft, PERFORATED, ABANDONED
7,106.0ft, 7,107.0ft, PERFORATED, ABANDONED
7,114.0ft, 7,115.0ft, PERFORATED, ABANDONED
7,118.0ft, 7,123.0ft, PERFORATED, ABANDONED
7,122.0ft, 7,123.0ft, PERFORATED, ABANDONED
7,160.5ft, 7,161.5ft, PERFORATED, ABANDONED
7,166.0ft, 7,167.0ft, PERFORATED, ABANDONED
7,171.5ft, 7,172.5ft, PERFORATED, ABANDONED
7,177.0ft, 7,178.0ft, PERFORATED, ABANDONED
7,182.5ft, 7,183.5ft, PERFORATED, ABANDONED
7,188.0ft, 7,189.0ft, PERFORATED, ABANDONED
7,193.5ft, 7,194.5ft, PERFORATED, ABANDONED
7,199.0ft, 7,200.0ft, PERFORATED, ABANDONED
7,204.5ft, 7,205.5ft, PERFORATED, ABANDONED
7,210.0ft, 7,211.0ft, PERFORATED, ABANDONED

ROD STRING Report Date: 4/25/2006 00:00

Component	Top MD (ft)	Btm MD (ft)
POLROD	0.0	30.0
PNYROD	30.0	50.0
ROD	50.0	2,090.0
ROD	2,090.0	7,070.0
INSPMP	7,070.0	7,094.0

TUBING STRING Report Date: 4/25/2006 00:00

Component	Top MD (ft)	Btm MD (ft)
TH-DBB	13.0	13.7
FATNIP	13.7	14.4
TBGJNT	14.4	5,302.5
XO	5,302.5	5,303.6
TBGJNT	5,303.6	6,841.4
AC	6,841.4	6,844.7
TBGJNT	6,844.7	7,095.1
SBLOC	7,095.1	7,096.2
TBGJNT	7,096.2	7,099.6
STCOLL	7,099.6	7,100.0

PLUG BACK Report Date: 9/25/2004 00:00

Component	Top MD (ft)	Btm MD (ft)
CEMENT	6,452.0	6,849.0

PLUG BACK Report Date: 4/25/2003 00:00

Component	Top MD (ft)	Btm MD (ft)
SAND	6,850.0	6,858.0
BP-RET	6,858.0	6,861.8

PLUG BACK Report Date: 12/14/2001 00:00

Component	Top MD (ft)	Btm MD (ft)
CEMENT	6,920.0	7,335.0

PLUG BACK Report Date: 6/11/1990 00:00

Component	Top MD (ft)	Btm MD (ft)
CEMENT	7,335.0	7,425.0

CONDUCTOR CASING Report Date: 11/16/1981 00:00

Item	OD (in)	Grade	Wt. (ppf)	TopMD (ft)	BtmMD (ft)
CASING JOINT(S)	20.000			13.0	53.0

SURFACE CASING Report Date: 11/20/1981 00:00

Item	OD (in)	Grade	Wt. (ppf)	TopMD (ft)	BtmMD (ft)
CASING JOINT(S)	13.375	H-40	48.00	13.0	308.7
GUIDE SHOE	13.375			308.7	310.0

INTERMEDIATE CASING Report Date: 11/25/1981 00:00

Item	OD (in)	Grade	Wt. (ppf)	TopMD (ft)	BtmMD (ft)
CASING JOINT(S)	9.625	J-55	36.00	13.0	3,154.8
GUIDE SHOE	9.625			3,154.8	3,156.0

PRODUCTION CASING Report Date: 12/12/1981 00:00

Item	OD (in)	Grade	Wt. (ppf)	TopMD (ft)	BtmMD (ft)
CASING JOINT(S)	7.000	K-55	26.00	13.0	78.1
CASING JOINT(S)	7.000	K-55	23.00	78.1	4,864.7
CASING JOINT(S)	7.000	K-55	26.00	4,864.7	6,171.8
FLAG JOINT	7.000	K-55	26.00	6,171.8	6,190.5
CASING JOINT(S)	7.000	K-55	26.00	6,190.5	6,749.9
FLOAT COLLAR	7.000		26.00	6,749.9	6,752.0
CASING JOINT(S)	7.000	K-55	26.00	6,752.0	6,796.2
FLOAT SHOE	7.000		26.00	6,796.2	6,797.2

LINER Report Date: 12/16/1989 00:00

Item	OD (in)	Grade	Wt. (ppf)	TopMD (ft)	BtmMD (ft)
LINER HANGER	6.276			6,090.9	6,093.2
PBR	5.940			6,093.2	6,113.7
CASING JOINT(S)	5.500	N-80	20.00	6,113.7	7,335.4
FLOAT COLLAR	5.500			7,335.4	7,338.5
CASING JOINT(S)	5.500	N-80	20.00	7,338.5	7,422.8
FLOAT SHOE	5.500			7,422.8	7,425.0

LINER Report Date: 10/20/2004 00:00

Item	OD (in)	Grade	Wt. (ppf)	TopMD (ft)	BtmMD (ft)
LINER HANGER	5.000	P-110	18.00	5,722.0	5,758.8
CASING JOINT(S)	5.000	P-110	18.00	5,758.8	7,425.3
LANDING COLLAR	5.000	P-110	18.00	7,425.3	7,425.3
CASING JOINT(S)	5.000	P-110	18.00	7,425.3	7,468.9
FLOAT COLLAR	5.000	P-110	18.00	7,468.9	7,470.0
CASING JOINT(S)	5.000	P-110	18.00	7,470.0	7,513.4
GUIDE SHOE	5.000	P-110	18.00	7,513.4	7,515.0

Well: 374-34S S/T/R: 34S/30S/24E

CASING CEMENT DETAIL
- - -
Sfc Csg. Cmt Vol.: 650 cf
Hole Size: 17-1/2" (13-3/8" Casing)
Top Job: No
Rtns to Sfc: YES
TTOC: NA
- - -

Interm Csg. Cmt Vol.: 1480 cf
Hole Size: 12-1/4" (9-5/8" Casing)
Top Job: NO
Rtns to Sfc: YES
TTOC: NA
- - -

Prod. Csg. Cmt Vol.: 1700 cf
Hole Size: 8-3/4" (7" Casing)
Top Job: NO
Rtns to Sfc: YES
TTOC: NA
- - -

Liner Cmt Vol.: 263 Sks.
Hole Size: 8-3/4" (5-1/2" Liner)
Top Job: No
Rtns to Sfc: NO
TTOC: 4747'
- - -
Top of Formation:
UBA: 6878'
BLW: 7210'

Volume Behind Pipe:
1.3 Yield Assumed
Theoretical Calculations (TTOC)

OCCIDENTAL OF ELK HILLS INC

374-34S

Event: WELL MAINT - RIG
Event End:
Sec. Reason:
End Status:
Well Classification: DEVELOPMENT

Ground Level: 749.0ft
Datum: ORIGINAL KB @ 762.00ft (default)
API No.: 0402965773

Wellbore: ST 1
PBMD: 6,452.0ft
Btm TMD: 7,525.0ft
Spud Date: 11/16/1981 00:00
BH Coord X: 6,149,875.44uss ft
BH Coord Y: 2,289,336.32uss ft

Casing Shoes (ft)	Schematic (8/31/2009)	Openings Top/Btm/Type/Status

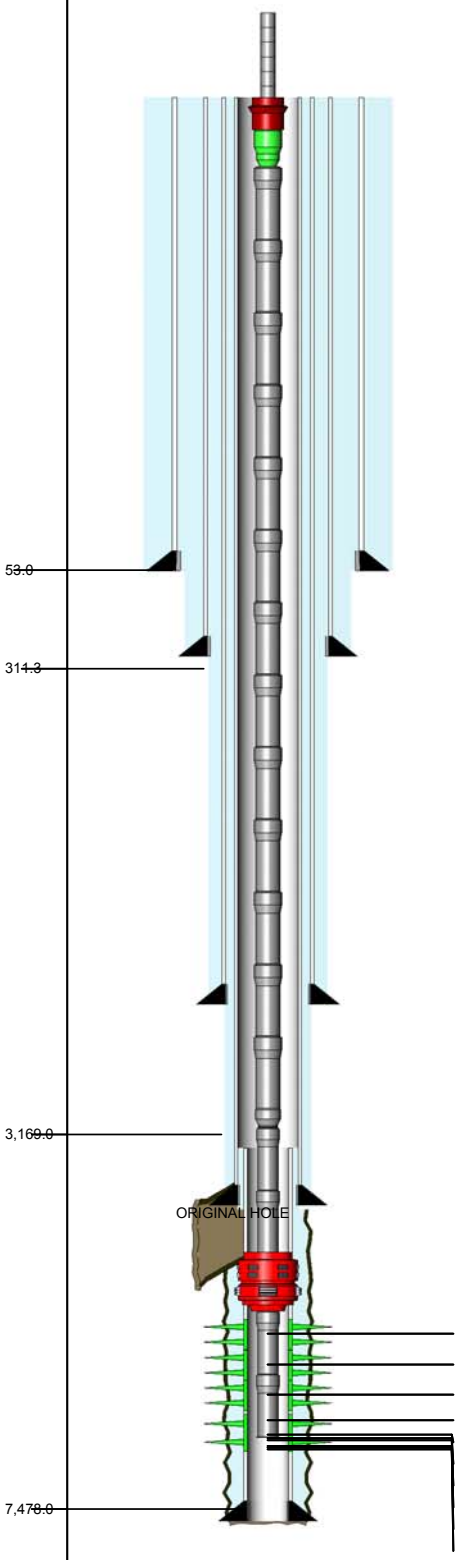

7,019.0ft, 7,024.0ft, PERFORATED, OPEN
7,034.0ft, 7,060.0ft, PERFORATED, OPEN
7,060.0ft, 7,065.0ft, PERFORATED, OPEN
7,072.0ft, 7,085.0ft, PERFORATED, OPEN
7,090.0ft, 7,103.0ft, PERFORATED, OPEN
7,103.0ft, 7,109.0ft, PERFORATED, OPEN
7,109.0ft, 7,125.0ft, PERFORATED, OPEN
7,140.0ft, 7,151.0ft, PERFORATED, OPEN
7,151.0ft, 7,156.0ft, PERFORATED, OPEN
7,156.0ft, 7,168.0ft, PERFORATED, OPEN

ROD STRING Report Date: 4/25/2006 00:00

Component	Top MD (ft)	Btm MD (ft)
POLROD	0.0	30.0
PNYROD	30.0	50.0
ROD	50.0	2,090.0
ROD	2,090.0	7,070.0
INSPMP	7,070.0	7,094.0

TUBING STRING Report Date: 4/25/2006 00:00

Component	Top MD (ft)	Btm MD (ft)
TH-DBB	13.0	13.7
FATNIP	13.7	14.4
TBGJNT	14.4	5,302.5
XO	5,302.5	5,303.6
TBGJNT	5,303.6	6,841.4
AC	6,841.4	6,844.7
TBGJNT	6,844.7	7,095.1
SBLOC	7,095.1	7,096.2
TBGJNT	7,096.2	7,099.6
STCOLL	7,099.6	7,100.0

CONDUCTOR CASING Report Date: 11/16/1981 00:00

Item	OD (in)	Grade	Wt. (ppf)	TopMD (ft)	BtmMD (ft)
CASING JOINT(S)	20.000			13.0	53.0

SURFACE CASING Report Date: 11/20/1981 00:00

Item	OD (in)	Grade	Wt. (ppf)	TopMD (ft)	BtmMD (ft)
CASING JOINT(S)	13.375	H-40	48.00	13.0	308.7
GUIDE SHOE	13.375			308.7	310.0

INTERMEDIATE CASING Report Date: 11/25/1981 00:00

Item	OD (in)	Grade	Wt. (ppf)	TopMD (ft)	BtmMD (ft)
CASING JOINT(S)	9.625	J-55	36.00	13.0	3,154.8
GUIDE SHOE	9.625			3,154.8	3,156.0

PRODUCTION CASING Report Date: 12/12/1981 00:00

Item	OD (in)	Grade	Wt. (ppf)	TopMD (ft)	BtmMD (ft)
CASING JOINT(S)	7.000	K-55	26.00	13.0	78.1
CASING JOINT(S)	7.000	K-55	23.00	78.1	4,864.7
CASING JOINT(S)	7.000	K-55	26.00	4,864.7	6,171.8
FLAG JOINT	7.000	K-55	26.00	6,171.8	6,190.5
CASING JOINT(S)	7.000	K-55	26.00	6,190.5	6,749.9
FLOAT COLLAR	7.000		26.00	6,749.9	6,752.0
CASING JOINT(S)	7.000	K-55	26.00	6,752.0	6,796.2
FLOAT SHOE	7.000		26.00	6,796.2	6,797.2

LINER Report Date: 10/20/2004 00:00

Item	OD (in)	Grade	Wt. (ppf)	TopMD (ft)	BtmMD (ft)
LINER HANGER	5.000	P-110	18.00	5,722.0	5,758.8
CASING JOINT(S)	5.000	P-110	18.00	5,758.8	7,425.3
LANDING COLLAR	5.000	P-110	18.00	7,425.3	7,425.3
CASING JOINT(S)	5.000	P-110	18.00	7,425.3	7,468.9
FLOAT COLLAR	5.000	P-110	18.00	7,468.9	7,470.0
CASING JOINT(S)	5.000	P-110	18.00	7,470.0	7,513.4
GUIDE SHOE	5.000	P-110	18.00	7,513.4	7,515.0

Well: 374-34S-RD1 S/T/R: 34S/30S/24E

CASING CEMENT DETAIL
- - -
Sfc Csg. Cmt Vol.: 650 cf
Hole Size: 17-1/2" (13-3/8" Casing)
Top Job: NO
Rtns to Sfc: YES
TTOC: NA
- - -

Interm Csg. Cmt Vol.: 1480 cf
Hole Size: 12-1/4" (9-5/8" Casing)
Top Job: No
Rtns to Sfc: YES
TTOC: NA
- - -

Prod. Csg. Cmt Vol.: 1700 cf
Hole Size: 8-3/4" (7" Casing)
Top Job: NO
Rtns to Sfc: YES
TTOC: NA
- - -

Liner Cmt Vol.: 343 cf
Hole Size: 6-1/8" (5" Liner)
Top Job: NO
Rtns to Sfc: NO
TTOC: 2490'
- - -
Top of Formation:
UBA: 6878'
BLW: 7210'

Volume Behind Pipe:
1.3 Yield Assumed
Theoretical Calculations (TTOC)

OCCIDENTAL OF ELK HILLS INC

374X-35S

Event: WELL MAINT - RIGLESS
Event End:
Sec. Reason:

Ground Level: 593.0ft
Datum: ORIGINAL KB @ 607.00ft (default)
API No.: 0402960699

Wellbore: ORIGINAL HOLE
PBMD: 7,250.0ft
Btm TMD: 7,948.0ft
Spud Date: 12/20/1979 00:00
BH Coord X: 6,155,210.26uss ft
BH Coord Y: 2,289,120.46uss ft

Casing Shoes (ft)	Schematic (8/4/2009)	Openings Top/Btm/Type/Status

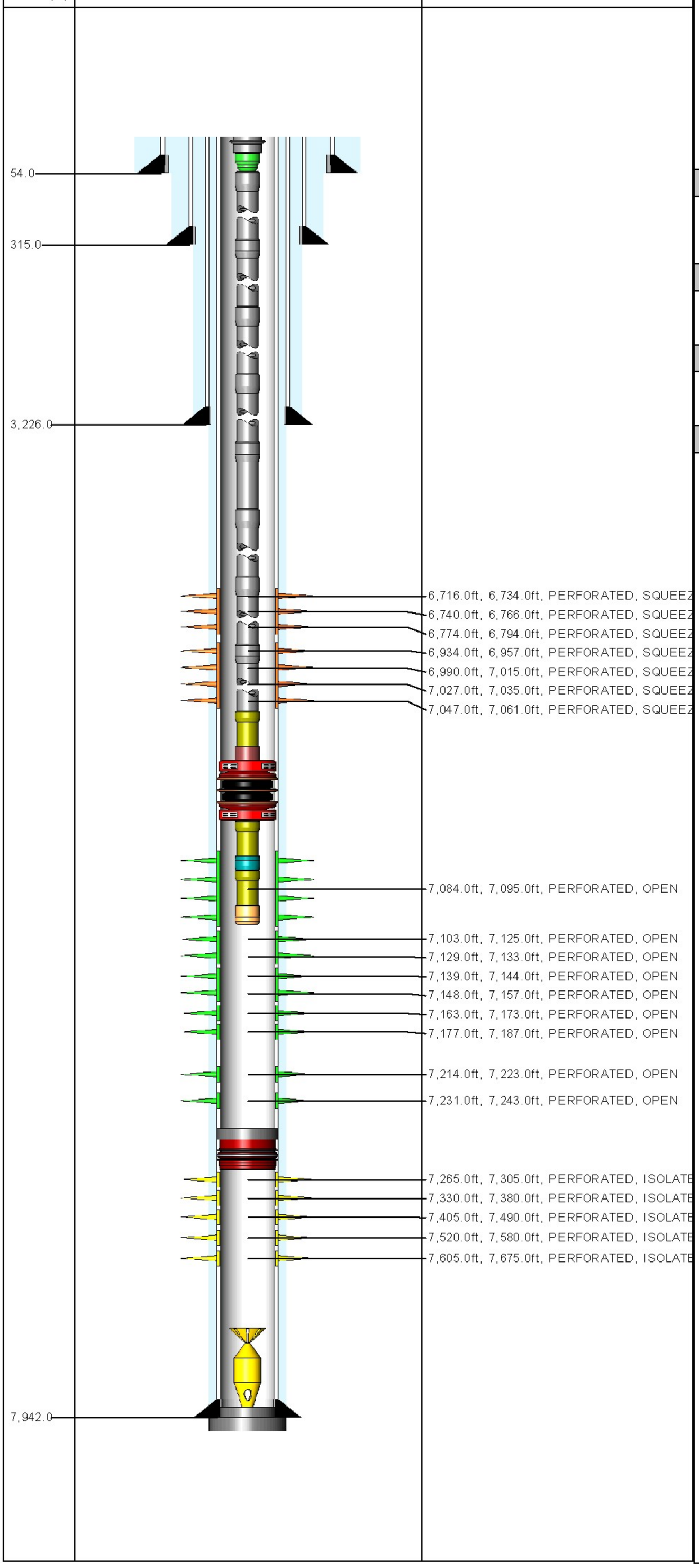

TUBING STRING Report Date: 10/30/2008 00:00

Component	Top MD (ft)	Btm MD (ft)
TH	14.0	14.6
FATNIP	14.6	15.3
CAS	15.3	7,064.7
PUPJNT	7,064.7	7,068.9
ON-OFF	7,068.9	7,070.7
PKR	7,070.7	7,078.7
PUPJNT	7,078.7	7,084.9
PRONIP	7,084.9	7,086.0
PUPJNT	7,086.0	7,090.2
WLREG	7,090.2	7,090.8

PLUG BACK Report Date: 11/21/2003 00:00

Component	Top MD (ft)	Btm MD (ft)
CEMENT	7,245.0	7,250.0
BRP	7,250.0	7,252.0

PLUG BACK Report Date: 6/18/1986 00:00

Component	Top MD (ft)	Btm MD (ft)
JUNK	7,892.0	7,897.0

PLUG BACK Report Date: 6/13/1980 00:00

Component	Top MD (ft)	Btm MD (ft)
CEMENT	7,897.0	7,942.0

PLUG BACK Report Date: 3/30/1980 00:00

Component	Top MD (ft)	Btm MD (ft)
CEMENT	7,942.0	7,950.0

CONDUCTOR CASING Report Date: 12/20/1979 00:00

Item	OD (in)	Grade	Wt. (ppf)	TopMD (ft)	BtmMD (ft)
CASING JOINT(S)	20.000			14.0	54.0

SURFACE CASING Report Date: 2/24/1980 00:00

Item	OD (in)	Grade	Wt. (ppf)	TopMD (ft)	BtmMD (ft)
CASING JOINT(S)	13.375	K-55	54.50	14.0	273.5
FLOAT COLLAR	13.375	K-55	54.50	273.5	273.5
CASING JOINT(S)	13.375	K-55	54.50	273.5	314.0
FLOAT SHOE	13.375	K-55	54.50	314.0	315.0

INTERMEDIATE CASING Report Date: 3/1/1980 00:00

Item	OD (in)	Grade	Wt. (ppf)	TopMD (ft)	BtmMD (ft)
CASING JOINT(S)	9.625	K-55	40.00	14.0	3,182.2
FLOAT COLLAR	9.625	K-55	40.00	3,182.2	3,182.3
CASING JOINT(S)	9.625	K-55	40.00	3,182.3	3,225.0
FLOAT SHOE	9.625	K-55	40.00	3,225.0	3,226.0

PRODUCTION CASING Report Date: 3/30/1980 00:00

Item	OD (in)	Grade	Wt. (ppf)	TopMD (ft)	BtmMD (ft)
CASING JOINT(S)	7.000	N-80	26.00	14.0	45.9
CASING JOINT(S)	7.000	N-80	23.00	45.9	6,574.8
CROSSOVER	7.000	N-80	26.00	6,574.8	6,613.5
FLAG JOINT	7.000	N-80	26.00	6,613.5	6,632.2
CASING JOINT(S)	7.000	N-80	26.00	6,632.2	7,897.4
FLOAT COLLAR	7.000	N-80	26.00	7,897.4	7,898.7
CASING JOINT(S)	7.000	N-80	26.00	7,898.7	7,939.8
FLOAT SHOE	7.000	N-80	26.00	7,939.8	7,942.0

Well: 374X-35S S/T/R: 36/30S/24E

CASING CEMENT DETAIL
- - -
Sfc Csg. Cmt Vol.: 450 cf
Hole Size: 17.5
Top Job: no
Rtns to Sfc: 20 cf
TOC: sfc
- - -

Interm Csg. Cmt Vol.: 1550 cf
Hole Size: 12.25
Top Job: no
Rtns to Sfc: 56 cf
TOC: sfc
- - -

Prod. Csg. Cmt Vol.: 1900 cf
Hole Size: 8.75
Top Job: no
Rtns to Sfc: 0
TTOC: sfc
- - -

Liner Cmt Vol.:
Hole Size:
Top Job:
Rtns to Sfc:
TOC:
- - -
Top of Formation:
UBA: 7234'
BLW: 7698'

Volume Behind Pipe:
1.3 Yield Assumed
Theoretical Calculations (TTOC)
JEP

OCCIDENTAL OF ELK HILLS INC

375-33S

Event: WELL MAINT - RIGLESS
Event End:
Sec. Reason:
End Status:
Well Classification: INJECTION

Ground Level: 955.0ft
Datum: ORIGINAL KB @ 969.00ft (default)
API No.: 0402952195

Wellbore: ST1
PBMD: 7,492.0ft
Btm TMD: 8,000.0ft
Spud Date: 2/25/1976 00:00
BH Coord X: 6,144,597.00uss ft
BH Coord Y: 2,288,850.68uss ft

Casing Shoes (ft)

Schematic (9/1/2009)

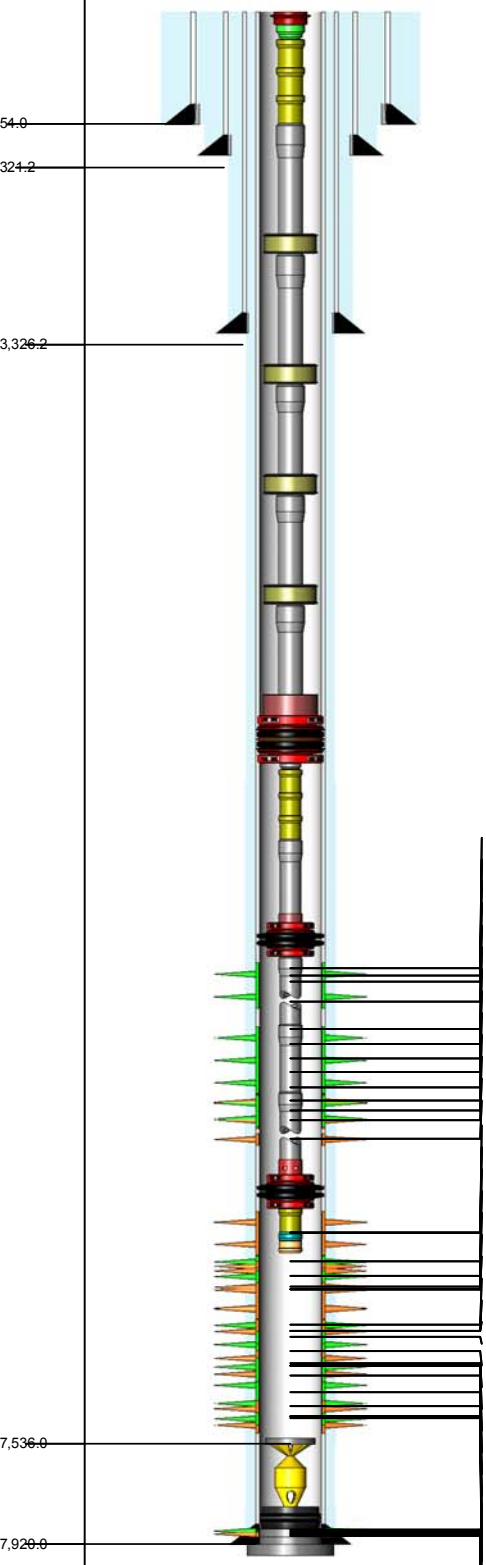

Openings Top/Btm/Type/Status

6,442.0ft, 6,502.0ft, PERFORATED, OPEN
6,508.0ft, 6,509.0ft, WSO PERFS, SQUEEZED
6,510.0ft, 6,531.0ft, PERFORATED, OPEN
6,566.0ft, 6,586.0ft, PERFORATED, OPEN
6,652.0ft, 6,670.0ft, PERFORATED, OPEN
6,689.0ft, 6,710.0ft, PERFORATED, OPEN
6,725.0ft, 6,746.0ft, PERFORATED, OPEN
6,754.0ft, 6,774.0ft, PERFORATED, OPEN
6,790.0ft, 6,805.0ft, PERFORATED, OPEN
6,810.0ft, 6,818.0ft, PERFORATED, OPEN
6,804.0ft, 6,864.0ft, PERFORATED, SQUEEZED
6,848.0ft, 6,856.0ft, PERFORATED, OPEN
6,880.0ft, 6,930.0ft, PERFORATED, SQUEEZED
6,940.0ft, 6,994.0ft, PERFORATED, OPEN
6,940.0ft, 6,994.0ft, PERFORATED, SQUEEZED
7,004.0ft, 7,055.0ft, PERFORATED, OPEN
7,056.0ft, 7,066.0ft, PERFORATED, OPEN
7,004.0ft, 7,070.0ft, PERFORATED, SQUEEZED
7,027.1ft, 7,070.1ft, PERFORATED, SQUEEZED
7,027.2ft, 7,070.2ft, REPERFORATED, SQUEEZE
7,080.0ft, 7,124.0ft, PERFORATED, OPEN
7,080.0ft, 7,137.0ft, PERFORATED, SQUEEZED
7,080.1ft, 7,137.1ft, REPERFORATED, SQUEEZE
7,125.0ft, 7,135.0ft, PERFORATED, OPEN
7,168.0ft, 7,224.0ft, PERFORATED, OPEN
7,225.0ft, 7,235.0ft, PERFORATED, OPEN
7,190.0ft, 7,262.0ft, PERFORATED, SQUEEZED
7,190.1ft, 7,262.1ft, REPERFORATED, SQUEEZE
7,190.2ft, 7,262.2ft, REPERFORATED, SQUEEZE
7,236.0ft, 7,262.0ft, PERFORATED, OPEN
7,310.0ft, 7,320.0ft, PERFORATED, OPEN
7,336.0ft, 7,346.0ft, PERFORATED, OPEN
7,336.0ft, 7,440.0ft, PERFORATED, SQUEEZED
7,336.1ft, 7,440.1ft, REPERFORATED, SQUEEZE
7,347.0ft, 7,406.0ft, PERFORATED, OPEN
7,630.0ft, 7,650.0ft, PERFORATED, OPEN
7,675.0ft, 7,720.0ft, PERFORATED, SQUEEZED
7,740.0ft, 7,774.0ft, PERFORATED, SQUEEZED
7,785.0ft, 7,820.0ft, PERFORATED, SQUEEZED
7,850.0ft, 7,870.0ft, PERFORATED, SQUEEZED

TUBING STRING — Report Date: 9/18/2007 00:00

Component	Top MD (ft)	Btm MD (ft)
TH-DBB	14.0	14.6
FATNIP	14.6	15.3
PUPJNT	15.3	16.4
PUPJNT	16.4	18.6
PUPJNT	18.6	28.8
CAS	28.8	2,208.2
GLM	2,208.2	2,216.8
CAS	2,216.8	3,898.9
GLM	3,898.9	3,907.6
CAS	3,907.6	5,312.1
GLM	5,312.1	5,320.8
CAS	5,320.8	6,226.4
GLM	6,226.4	6,235.0
CAS	6,235.0	6,266.5
ON-OFF	6,266.5	6,268.7
PKR	6,268.7	6,274.2
XO	6,274.2	6,275.4
PUPJNT	6,275.4	6,285.8
PUPJNT	6,285.8	6,290.8
PUPJNT	6,290.8	6,295.8
CAS	6,295.8	6,390.5
ON-OFF	6,390.5	6,391.9
PKR	6,391.9	6,397.1
CAS	6,397.1	6,931.1
SS	6,931.1	6,935.1
PKR	6,935.1	6,939.0
PUPJNT	6,939.0	6,947.1
PRONIP	6,947.1	6,948.5
WLREG	6,948.5	6,949.0

PLUG BACK — Report Date: 4/21/2004 00:00

Component	Top MD (ft)	Btm MD (ft)
CEMENT	7,459.0	7,538.0

PLUG BACK — Report Date: 3/5/1989 00:00

Component	Top MD (ft)	Btm MD (ft)
JUNK	7,538.0	7,578.0

PLUG BACK — Report Date: 6/17/1976 00:00

Component	Top MD (ft)	Btm MD (ft)
CR-PRM	7,578.0	7,580.0
CEMENT	7,580.0	7,870.0

PLUG BACK — Report Date: 6/15/1976 00:00

Component	Top MD (ft)	Btm MD (ft)
CEMENT	7,870.0	7,920.0

PLUG BACK — Report Date: 6/14/1976 00:00

Component	Top MD (ft)	Btm MD (ft)
CEMENT	7,920.0	8,000.0

CONDUCTOR CASING — Report Date: 2/25/1976 00:00

em	OD (in)	Grade	Wt. (ppf)	TopMD (ft)	BtmMD (ft)
ASING JOINT(S)	20.000			14.0	54.0

SURFACE CASING — Report Date: 5/9/1976 00:00

em	OD (in)	Grade	Wt. (ppf)	TopMD (ft)	BtmMD (ft)
ASING JOINT(S)	13.375	K-55	54.50	14.0	318.8
UIDE SHOE	13.375			318.8	320.0

INTERMEDIATE CASING — Report Date: 5/14/1976 00:00

em	OD (in)	Grade	Wt. (ppf)	TopMD (ft)	BtmMD (ft)
ASING JOINT(S)	9.625	K-55	40.00	14.0	3,323.8
UIDE SHOE	9.625			3,323.8	3,325.0

PRODUCTION CASING — Report Date: 6/14/1976 00:00

em	OD (in)	Grade	Wt. (ppf)	TopMD (ft)	BtmMD (ft)
ASING JOINT(S)	7.000	K-55	26.00	14.0	85.9
ASING JOINT(S)	7.000	K-55	23.00	85.9	4,970.4
ASING JOINT(S)	7.000	K-55	26.00	4,970.4	6,662.7
LAG JOINT	7.000	K-55	26.00	6,662.7	6,683.7
ASING JOINT(S)	7.000	K-55	26.00	6,683.7	7,874.0
LOAT COLLAR	7.000		26.00	7,874.0	7,875.9
ASING JOINT(S)	7.000	K-55	26.00	7,875.9	7,917.6
LOAT SHOE	7.000		26.00	7,917.6	7,920.0

INNER LINER — Report Date: 4/21/2004 00:00

em	OD (in)	Grade	Wt. (ppf)	TopMD (ft)	BtmMD (ft)
IE BACK RECEPTACLE	5.000			6,281.7	6,287.4
	5.000			6,287.4	6,294.7
INER HANGER	5.000			6,294.7	6,301.8
BR	5.000			6,301.8	6,304.8
ROSSOVER	5.000			6,304.8	6,305.7
ASING JOINT(S)	5.000	N-80	15.00	6,305.7	7,491.3
ANDING COLLAR	5.000			7,491.3	7,493.7
ASING JOINT(S)	5.000	N-80	15.00	7,493.7	7,533.2
LOAT SHOE	5.000			7,533.2	7,536.0

Well: 375-33S S/T/R: 33S/30S/24E

CASING CEMENT DETAIL
- - -
Sfc Csg. Cmt Vol.: 344 cf
Hole Size: 17.5"
Top Job: no
Rtns to Sfc: 40 cf
TOC: sfc
- - -

Interm Csg. Cmt Vol.: 1652 cf
Hole Size: 12.25"
Top Job: no
Rtns to Sfc: 200 cf
TOC: sfc
- - -

Prod. Csg. Cmt Vol.: 2000 cf
Hole Size: 8.75"
Top Job: no
Rtns to Sfc: no
TTOC: CBL log indicates 6790'
- - -

Inner Liner Cmt Vol.: 162 cf
Hole Size: 7"
Top Job: no
Rtns to Sfc : good returns through liner top
TOC: TOL
- - -
Top of Formation:
UBA: 6932'
BLW: 7471'

Volume Behind Pipe:
1.3 Yield Assumed
Theoretical Calculations (TTOC)

OCCIDENTAL OF ELK HILLS INC

375-34S

Event: WELL MAINT - RIG
Event End:
Sec. Reason:
End Status:
Well Classification: INJECTION

Ground Level: 760.0ft
Datum: ORIGINAL KB @ 775.00ft (default)
API No.: 0402954414

Wellbore: ORIGINAL HOLE
PBMD: 7,080.0ft
Btm TMD: 7,300.0ft
Spud Date: 12/2/1976 00:00
BH Coord X: 6,149,568.10uss ft
BH Coord Y: 2,288,915.90uss ft

Casing Shoes (ft) | Schematic (8/31/2009) | Openings Top/Btm/Type/Status

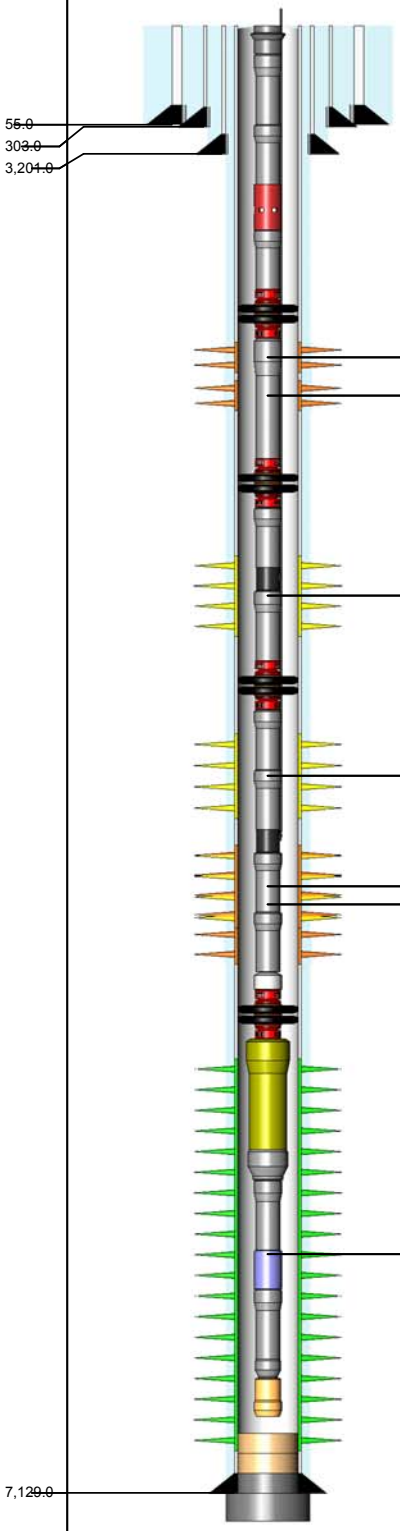

6,518.0ft, 6,587.0ft, PERFORATED, SQUEEZED
6,606.0ft, 6,690.0ft, PERFORATED, SQUEEZED
6,748.0ft, 6,766.0ft, PERFORATED, ISOLATED
6,780.0ft, 6,818.0ft, PERFORATED, ISOLATED
6,830.0ft, 6,870.0ft, PERFORATED, ISOLATED
6,830.0ft, 6,908.0ft, PERFORATED, SQUEEZED
6,920.0ft, 7,036.0ft, PERFORATED, OPEN

TUBING STRING — Report Date: 10/15/1991 00:00

Component	Top MD (ft)	Btm MD (ft)
TH-SGL	15.0	15.6
TBGJNT	15.6	19.3
TBGJNT	19.3	6,464.4
SS-C	6,464.4	6,467.6
TBGJNT	6,467.6	6,499.2
PKR-S	6,499.2	6,503.5
TBGJNT	6,503.5	6,718.7
PKR-S	6,718.7	6,723.0
TBGJNT	6,723.0	6,754.1
INJM-D	6,754.1	6,763.3
TBGJNT	6,763.3	6,767.5
PKR-S	6,767.5	6,771.8
TBGJNT	6,771.8	6,792.3
TBGJNT	6,792.3	6,823.5
INJM-D	6,823.5	6,832.7
TBGJNT	6,832.7	6,853.0
TBGJNT	6,853.0	6,915.8
LOCSUB	6,915.8	6,916.3
PKR-S	6,916.3	6,919.3
PUPJNT	6,919.3	6,923.5
XO	6,923.5	6,924.1
TBGJNT	6,924.1	6,932.3
NOGO-O	6,932.3	6,933.4
TBGJNT	6,933.4	6,939.6
XO	6,939.6	6,940.0
WLREG	6,940.0	6,940.3

PLUG BACK — Report Date: 8/17/2004 00:00

Component	Top MD (ft)	Btm MD (ft)
FILL	7,010.0	7,040.0

PLUG BACK — Report Date: 1/5/2004 00:00

Component	Top MD (ft)	Btm MD (ft)
FILL	7,040.0	7,080.0

PLUG BACK — Report Date: 12/21/1976 00:00

Component	Top MD (ft)	Btm MD (ft)
CEMENT	7,080.0	7,129.0

PLUG BACK — Report Date: 12/20/1976 00:00

Component	Top MD (ft)	Btm MD (ft)
CEMENT	7,129.0	7,300.0

CONDUCTOR CASING — Report Date: 12/2/1976 00:00

Item	OD (in)	Grade	Wt. (ppf)	TopMD (ft)	BtmMD (ft)
CASING JOINT(S)	20.000			15.0	55.0

SURFACE CASING — Report Date: 12/2/1976 00:00

Item	OD (in)	Grade	Wt. (ppf)	TopMD (ft)	BtmMD (ft)
CASING JOINT(S)	13.375	H-40	48.00	15.0	303.0

INTERMEDIATE CASING — Report Date: 12/5/1976 00:00

Item	OD (in)	Grade	Wt. (ppf)	TopMD (ft)	BtmMD (ft)
CASING JOINT(S)	9.625	K-55	40.00	15.0	3,201.0

PRODUCTION CASING — Report Date: 12/20/1976 00:00

Item	OD (in)	Grade	Wt. (ppf)	TopMD (ft)	BtmMD (ft)
CASING JOINT(S)	7.000	K-55	26.00	15.0	83.0
CASING JOINT(S)	7.000	K-55	23.00	83.0	4,971.0
CASING JOINT(S)	7.000	K-55	26.00	4,971.0	7,033.9
FLOAT COLLAR	7.000	K-55	26.00	7,033.9	7,035.5
CASING JOINT(S)	7.000	K-55	26.00	7,035.5	7,127.0
FLOAT SHOE	7.000	K-55	26.00	7,127.0	7,129.0

Well: 375-34S S/T/R: 34S/30S/24E

CASING CEMENT DETAIL
- - -
Sfc Csg. Cmt Vol.: 370 cf
Hole Size: 17-1/2" (13-3/8" Casing)
Top Job: NO
Rtns to Sfc: YES
TTOC: NA
- - -

Interm Csg. Cmt Vol.: 1316 cf
Hole Size: 12-1/4" (9-5/8" Casing)
Top Job: NO
Rtns to Sfc: YES
TTOC: NA
- - -

Prod. Csg. Cmt Vol.: 1550 cf
Hole Size: 8-3/4" (7" Casing)
Top Job: NO
Rtns to Sfc: NO
TTOC: Surface
- - -

Liner Cmt Vol.: NONE
Hole Size:
Top Job:
Rtns to Sfc:
TTOC:
- - -
Top of Formation:
UBA: 6754'
BLW: 7122'

Volume Behind Pipe:
1.3 Yield Assumed
Theoretical Calculations (TTOC)

OCCIDENTAL OF ELK HILLS INC

375-35S

Event: WELL MAINT - RIG
Event End: 4/10/2007 00:00
Sec. Reason: SANDED

Ground Level: 666.0ft
Datum: ORIGINAL KB @ 681.00ft (default)
API No.: 0402957941

Wellbore: ORIGINAL HOLE
PBMD: 7,180.0ft
Btm TMD: 7,910.0ft
Spud Date: 5/9/1978 00:00
BH Coord X: 6,155,004.38uss ft
BH Coord Y: 2,288,606.96uss ft

Casing Shoes (ft) | Schematic (5/1/2007) | Openings Top/Btm/Type/Status

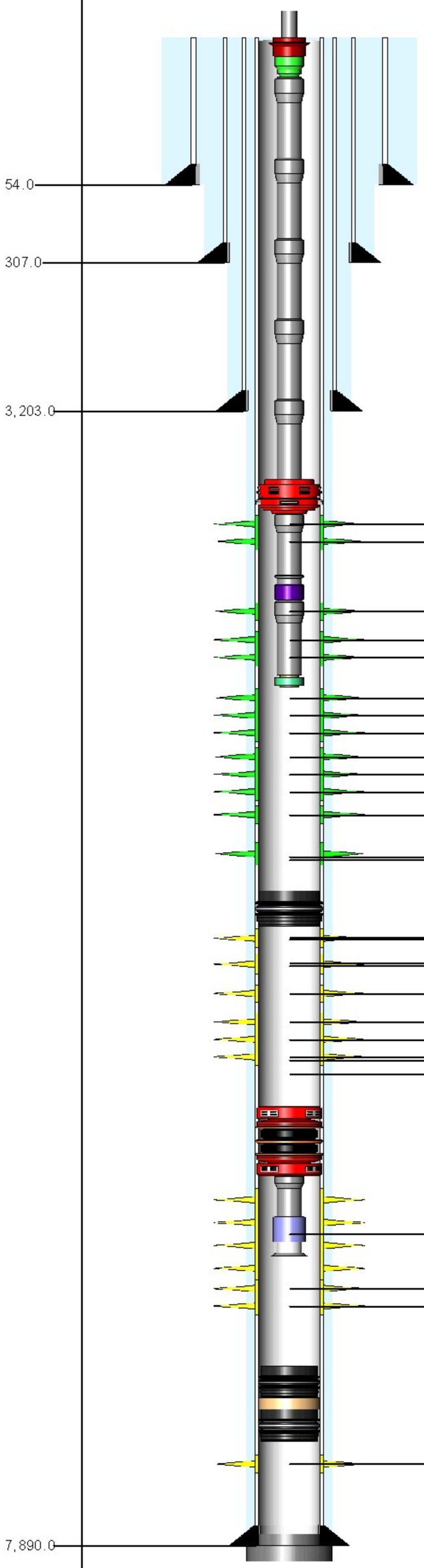

PACKER

6,670.0ft, 6,739.0ft, PERFORATED, OPEN
6,739.0ft, 6,760.0ft, PERFORATED, OPEN
6,902.0ft, 6,918.0ft, PERFORATED, OPEN
6,955.0ft, 6,967.0ft, PERFORATED, OPEN
6,967.0ft, 6,978.0ft, PERFORATED, OPEN
6,995.0ft, 7,008.0ft, PERFORATED, OPEN
7,008.0ft, 7,022.0ft, PERFORATED, OPEN
7,022.0ft, 7,030.0ft, PERFORATED, OPEN
7,052.0ft, 7,056.0ft, PERFORATED, OPEN
7,056.0ft, 7,066.0ft, PERFORATED, OPEN
7,066.0ft, 7,074.0ft, PERFORATED, OPEN
7,089.0ft, 7,108.0ft, PERFORATED, OPEN
7,155.0ft, 7,162.0ft, PERFORATED, OPEN
7,150.0ft, 7,166.0ft, PERFORATED, OPEN
7,199.0ft, 7,239.0ft, PERFORATED, ISOLATE
7,204.0ft, 7,245.0ft, PERFORATED, ISOLATE
7,264.0ft, 7,294.0ft, PERFORATED, ISOLATE
7,270.0ft, 7,300.0ft, PERFORATED, ISOLATE
7,328.0ft, 7,353.0ft, PERFORATED, ISOLATE
7,376.0ft, 7,398.0ft, PERFORATED, ISOLATE
7,398.0ft, 7,423.0ft, PERFORATED, ISOLATE
7,423.0ft, 7,453.0ft, PERFORATED, ISOLATE
7,437.0ft, 7,450.0ft, CASING HOLE, ISOLATE
7,438.0ft, 7,459.0ft, CASING HOLE, ISOLATE
7,473.0ft, 7,538.0ft, PERFORATED, ISOLATE
7,538.0ft, 7,563.0ft, PERFORATED, ISOLATE
7,563.0ft, 7,658.0ft, PERFORATED, ISOLATE
7,730.0ft, 7,750.0ft, PERFORATED, ISOLATE

ROD STRING Report Date: 4/10/2007 00:00

Component	Top MD (ft)	Btm MD (ft)
POLROD	0.0	30.0
PNYROD	30.0	54.0
ROD	54.0	2,874.0
ROD	2,874.0	6,834.0
RSTBAR	6,834.0	6,838.0
INSPMP	6,838.0	6,862.0

TUBING STRING Report Date: 4/10/2007 00:00

Component	Top MD (ft)	Btm MD (ft)
TH-DBB	15.0	15.6
FATNIP	15.6	16.8
TBGJNT	16.8	6,572.3
AC	6,572.3	6,574.6
TBGJNT	6,574.6	6,857.3
STNIP	6,857.3	6,858.4
TBGJNT	6,858.4	6,889.6
DESAND	6,889.6	6,892.5
TBGJNT	6,892.5	6,986.1
PRGVLV	6,986.1	6,986.5

PLUG BACK Report Date: 5/16/2003 00:00

Component	Top MD (ft)	Btm MD (ft)
BP-RET	7,180.0	7,190.3

PACKER ASSEMBLY (PERMANENT) Report Date: 1/27/1987 00:00

Component	Top MD (ft)	Btm MD (ft)
PKR-S	7,462.6	7,470.5
TBGJNT	7,470.5	7,478.6
NOGO-O	7,478.6	7,479.7
BELCOL	7,479.7	7,480.3

PLUG BACK Report Date: 1/25/1987 00:00

Component	Top MD (ft)	Btm MD (ft)
BP-RET	7,662.0	7,665.0
FILL	7,665.0	7,700.0

PLUG BACK Report Date: 12/20/1978 00:00

Component	Top MD (ft)	Btm MD (ft)
BP-DR	7,700.0	7,703.0

PLUG BACK Report Date: 8/27/1978 00:00

Component	Top MD (ft)	Btm MD (ft)
CEMENT	7,846.0	7,890.0

PLUG BACK Report Date: 8/26/1978 00:00

Component	Top MD (ft)	Btm MD (ft)
CEMENT	7,890.0	7,910.0

CONDUCTOR CASING Report Date: 5/9/1978 00:00

Item	OD (in)	Grade	Wt. (ppf)	TopMD (ft)	BtmMD (ft)
CASING JOINT(S)	20.000			15.0	54.0

SURFACE CASING Report Date: 7/25/1978 00:00

Item	OD (in)	Grade	Wt. (ppf)	TopMD (ft)	BtmMD (ft)
CASING JOINT(S)	13.375	H-40	48.00	15.0	266.0
FLOAT COLLAR	13.375	H-40	48.00	266.0	266.0
CASING JOINT(S)	13.375	H-40	48.00	266.0	306.0
FLOAT SHOE	13.375	H-40	48.00	306.0	307.0

INTERMEDIATE CASING Report Date: 7/29/1978 00:00

Item	OD (in)	Grade	Wt. (ppf)	TopMD (ft)	BtmMD (ft)
CASING JOINT(S)	9.625	N-80	40.00	15.0	3,161.0
FLOAT COLLAR	9.625	N-80	40.00	3,161.0	3,161.0
CASING JOINT(S)	9.625	N-80	40.00	3,161.0	3,202.0
FLOAT SHOE	9.625	N-80	40.00	3,202.0	3,203.0

PRODUCTION CASING Report Date: 8/26/1978 00:00

Item	OD (in)	Grade	Wt. (ppf)	TopMD (ft)	BtmMD (ft)
CASING JOINT(S)	7.000	K-55	26.00	15.0	74.4
CASING JOINT(S)	7.000	K-55	23.00	74.4	5,154.6
CASING JOINT(S)	7.000	K-55	26.00	5,154.6	6,548.7
FLAG JOINT	7.000	K-55	26.00	6,548.7	6,567.4
CASING JOINT(S)	7.000	K-55	26.00	6,567.4	7,846.2
FLOAT COLLAR	7.000	K-55	26.00	7,846.2	7,847.5
CASING JOINT(S)	7.000	K-55	26.00	7,847.5	7,887.9
FLOAT SHOE	7.000	K-55	26.00	7,887.9	7,890.0

Well: 375-35S S/T/R: 36/30S/24E

CASING CEMENT DETAIL
- - -
Sfc Csg. Cmt Vol.: 450 cf
Hole Size: 17.5
Top Job: no
Rtns to Sfc: 59 cf
TOC: sfc
- - -

Interm Csg. Cmt Vol.: 1606 cf
Hole Size: 12.25
Top Job: no
Rtns to Sfc: 110 cf
TOC: sfc
- - -

Prod. Csg. Cmt Vol.: 2000 cf
Hole Size: 8.75
Top Job: no
Rtns to Sfc: 0
TTOC: sfc
- - -

Liner Cmt Vol.:
Hole Size:
Top Job:
Rtns to Sfc:
TOC:
- - -
Top of Formation:
UBA: 7177'
BLW: 7660'

Volume Behind Pipe:
1.3 Yield Assumed
Theoretical Calculations (TTOC)
JEP

OCCIDENTAL OF ELK HILLS INC

375-4G

Event: WELL MAINT - RIGLESS
Event End: 1/7/2004 00:00
Sec. Reason: INJECTION PRIFILE SURVEY

Ground Level: 1,006.0ft
Datum: ORIGINAL KB @ 1,020.00ft (default)
API No.: 0402958675

Wellbore: ORIGINAL HOLE
PBMD: 7,874.0ft
Btm TMD: 8,025.0ft
Spud Date: 11/7/1978 00:00
BH Coord X: 6,144,439.30uss ft
BH Coord Y: 2,283,965.60uss ft

Casing Shoes (ft) | Schematic (2/1/2004) | Openings Top/Btm/Type/Status

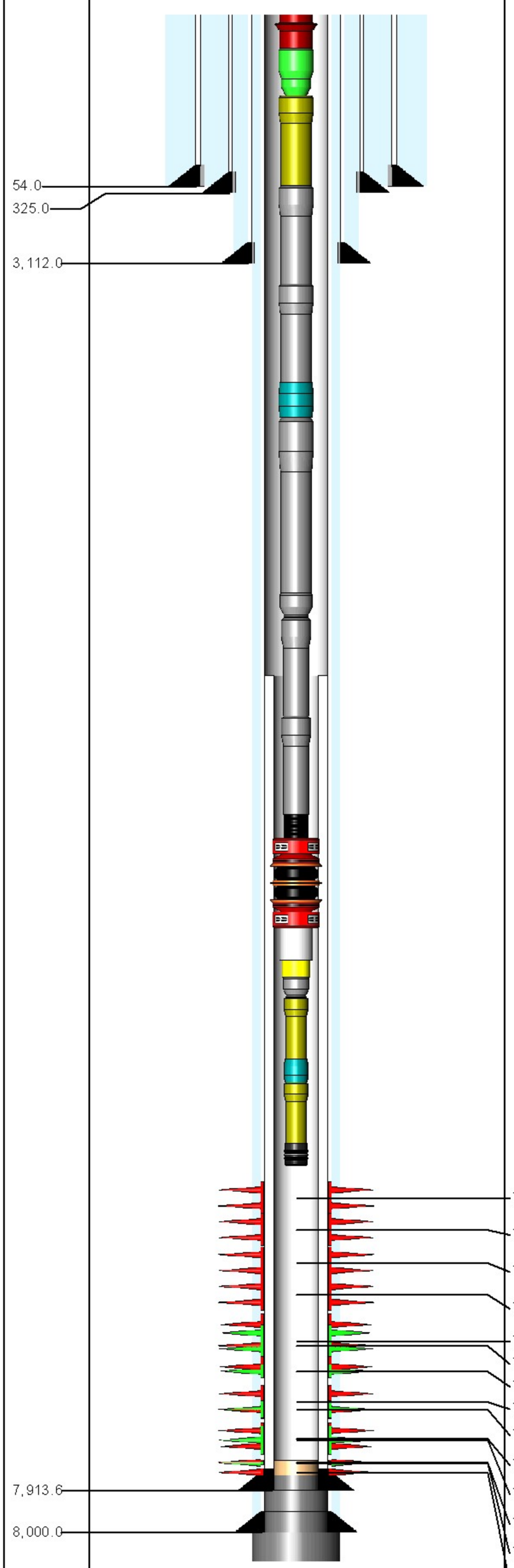

7,400.0ft, 7,455.0ft, PERFORATED, ABANDO
7,455.0ft, 7,475.0ft, PERFORATED, ABANDO
7,490.0ft, 7,505.0ft, PERFORATED, ABANDO
7,506.0ft, 7,525.0ft, PERFORATED, ABANDO
7,600.0ft, 7,625.0ft, PERFORATED, OPEN
7,565.0ft, 7,665.0ft, PERFORATED, ABANDO
7,640.0ft, 7,668.0ft, PERFORATED, OPEN
7,717.0ft, 7,730.0ft, PERFORATED, ABANDO
7,723.0ft, 7,734.0ft, PERFORATED, OPEN
7,755.0ft, 7,765.0ft, PERFORATED, ABANDO
7,756.0ft, 7,765.0ft, PERFORATED, OPEN
7,785.0ft, 7,810.0ft, PERFORATED, ABANDO
7,790.0ft, 7,810.0ft, PERFORATED, OPEN
7,835.0ft, 7,875.0ft, PERFORATED, ABANDO

TUBING STRING Report Date: 12/26/2002 00:00

Component	Top MD (ft)	Btm MD (ft)
TH-DBB	14.0	14.6
FATNIP	14.6	16.6
PUPJNT	16.6	45.2
TBGJNT	45.2	6,976.0
PNIP-O	6,976.0	6,977.4
TBGJNT	6,977.4	7,009.4
XO	7,009.4	7,010.4
TBGJNT	7,010.4	7,101.1
SA	7,101.1	7,101.9
PKR-S	7,101.9	7,104.3
SBEXT	7,104.3	7,111.9
MOEXT	7,111.9	7,119.9
XO	7,119.9	7,120.5
PUPJNT	7,120.5	7,128.6
PNIP-O	7,128.6	7,129.8
PUPJNT	7,129.8	7,135.9
POPLUG	7,135.9	7,136.4

PLUG BACK Report Date: 3/13/2003 00:00

Component	Top MD (ft)	Btm MD (ft)
FILL	7,787.0	7,874.0

PLUG BACK Report Date: 10/24/2001 00:00

Component	Top MD (ft)	Btm MD (ft)
CEMENT	7,874.0	7,913.6

PLUG BACK Report Date: 10/24/2001 00:00

Component	Top MD (ft)	Btm MD (ft)
CEMENT	7,913.6	7,919.0

PLUG BACK Report Date: 9/3/1979 00:00

Component	Top MD (ft)	Btm MD (ft)
CEMENT	7,919.0	8,000.0

PLUG BACK Report Date: 9/3/1979 00:00

Component	Top MD (ft)	Btm MD (ft)
CEMENT	8,000.0	8,025.0

CONDUCTOR CASING Report Date: 11/7/1978 00:00

Item	OD (in)	Grade	Wt. (ppf)	TopMD (ft)	BtmMD (ft)
CASING JOINT(S)	20.000			14.0	54.0

SURFACE CASING Report Date: 8/1/1979 00:00

Item	OD (in)	Grade	Wt. (ppf)	TopMD (ft)	BtmMD (ft)
CASING JOINT(S)	13.375	H-40	48.00	14.0	325.0

INTERMEDIATE CASING Report Date: 8/7/1979 00:00

Item	OD (in)	Grade	Wt. (ppf)	TopMD (ft)	BtmMD (ft)
CASING JOINT(S)	9.625	K-55	40.00	14.0	3,112.0

PRODUCTION CASING Report Date: 9/3/1979 00:00

Item	OD (in)	Grade	Wt. (ppf)	TopMD (ft)	BtmMD (ft)
CASING JOINT(S)	7.000	N-80	26.00	14.0	76.0
CASING JOINT(S)	7.000	K-55	23.00	76.0	5,112.0
CASING JOINT(S)	7.000	K-55	26.00	5,112.0	6,505.8
FLAG JOINT	7.000	K-55	26.00	6,505.8	6,523.7
CASING JOINT(S)	7.000	K-55	26.00	6,523.7	7,166.0
CASING JOINT(S)	7.000	N-80	26.00	7,166.0	8,000.0

LINER Report Date: 10/24/2001 00:00

Item	OD (in)	Grade	Wt. (ppf)	TopMD (ft)	BtmMD (ft)
LINER HANGER	6.276	N-80	15.00	7,047.0	7,060.7
CASING JOINT(S)	5.000	N-80	15.00	7,060.7	7,874.0
LANDING COLLAR	5.000	N-80	15.00	7,874.0	7,875.0
FLOAT COLLAR	5.000	N-80	15.00	7,875.0	7,876.1
CASING JOINT(S)	5.000	N-80	15.00	7,876.1	7,911.0
FLOAT COLLAR	5.000	N-80	15.00	7,911.0	7,912.1
FLOAT SHOE	5.000	N-80	15.00	7,912.1	7,913.6

Well: 375-4G S/T/R: 4G/30S/24E

CASING CEMENT DETAIL
- - -
Sfc Csg. Cmt Vol. (cf): 500
Hole Size (in.): 17.5
Top Job: no
Rtns to Sfc (cf): 20
TOC (ft): sfc
- - -

Interm Csg. Cmt Vol. (cf): 1680
Hole Size (in.): 12.25
Top Job: no
Rtns to Sfc (cf): trace
TOC (ft): sfc
- - -

Prod. Csg. Cmt Vol. (cf): 2480
Hole Size (in.): 8.75
Top Job: no
Rtns to Sfc (cf): 0
TTOC (ft): sfc

Liner Cmt Vol. (cf): 134
Hole Size (in.):
Top Job: no
Rtns to Sfc (cf): not recorded
TTOC (ft): 5950
- - -
Top of Formation:
UBA: 7386'
BLW: 7991'

Volume Behind Pipe:
1.3 Yield Assumed
Theoretical Calculations (TTOC)

Event: WELL MAINT - RIGLESS
Event End:
Sec. Reason:
End Status:
Well Classification: DEVELOPMENT

OCCIDENTAL OF ELK HILLS INC

375X-34S

Ground Level: 762.5ft
Datum: ORIGINAL KB @ 782.50ft (default)
API No.: 0403019894

Wellbore: ORIGINAL HOLE
PBMD: 7,195.0ft
Btm TMD: 7,305.0ft
Spud Date: 3/16/2002 00:00
BH Coord X: 6,150,334.79uss ft
BH Coord Y: 2,288,665.05uss ft

Casing Shoes (ft)	Schematic (8/31/2009)	Openings Top/Btm/Type/Status

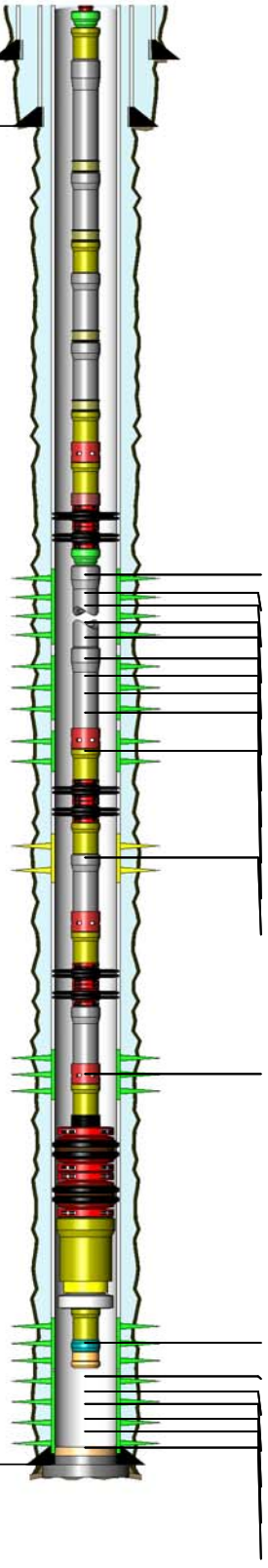

6,590.0ft, 6,598.0ft, PERFORATED, OPEN
6,614.0ft, 6,624.0ft, PERFORATED, OPEN
6,624.0ft, 6,630.0ft, PERFORATED, OPEN
6,640.0ft, 6,642.0ft, PERFORATED, OPEN
6,647.0ft, 6,662.0ft, PERFORATED, OPEN
6,676.0ft, 6,686.0ft, PERFORATED, OPEN
6,716.0ft, 6,730.0ft, PERFORATED, OPEN
6,742.0ft, 6,746.0ft, PERFORATED, OPEN
6,754.0ft, 6,760.0ft, PERFORATED, OPEN
6,765.0ft, 6,776.0ft, PERFORATED, OPEN
6,788.0ft, 6,810.0ft, PERFORATED, ISOLATED
6,988.0ft, 7,042.0ft, PERFORATED, OPEN
7,062.0ft, 7,076.0ft, PERFORATED, OPEN
7,084.0ft, 7,092.0ft, PERFORATED, OPEN
7,103.0ft, 7,106.0ft, PERFORATED, OPEN
7,106.0ft, 7,116.0ft, PERFORATED, OPEN
7,124.0ft, 7,145.0ft, PERFORATED, OPEN
7,145.0ft, 7,152.0ft, PERFORATED, OPEN
7,155.0ft, 7,185.0ft, PERFORATED, OPEN

TUBING STRING Report Date: 4/1/2008 00:00

Component	Top MD (ft)	Btm MD (ft)
TH-DBB	20.0	20.7
FATNIP	20.7	21.3
PUPJNT	21.3	23.5
CAS	23.5	2,401.4
GLM	2,401.4	2,409.8
CAS	2,409.8	4,195.3
GLM	4,195.3	4,203.9
PUPJNT	4,203.9	4,213.9
CAS	4,213.9	5,497.7
GLM	5,497.7	5,506.1
CAS	5,506.1	6,540.3
GLM	6,540.3	6,548.9
PUPJNT	6,548.9	6,554.6
SS	6,554.6	6,558.6
PUPJNT	6,558.6	6,568.7
ON-OFF	6,568.7	6,570.4
PKR	6,570.4	6,571.8
PKR	6,571.8	6,575.9
FATNIP	6,575.9	6,577.1
CAS	6,577.1	6,764.4
SS	6,764.4	6,768.4
PUPJNT	6,768.4	6,778.6
PKR	6,778.6	6,780.6
PKR	6,780.6	6,784.4
PUPJNT	6,784.4	6,794.4
CAS	6,794.4	6,825.8
SS	6,825.8	6,829.0
PUPJNT	6,829.0	6,839.1
PKR	6,839.1	6,841.1
PKR	6,841.1	6,844.9
CAS	6,844.9	7,033.8
SS	7,033.8	7,036.9
PUPJNT	7,036.9	7,047.0
SA	7,047.0	7,048.0
PKR	7,048.0	7,050.0
PKR	7,050.0	7,051.9
PUPJNT	7,051.9	7,053.0
MOEXT	7,053.0	7,058.5
SHRSUB	7,058.5	7,059.0
PUPJNT	7,059.0	7,069.0
PRONIP	7,069.0	7,070.1
WLREG	7,070.1	7,070.6

PLUG BACK Report Date: 7/30/2003 00:00

Component	Top MD (ft)	Btm MD (ft)
FILL	7,158.0	7,195.0

PLUG BACK Report Date: 4/18/2002 00:00

Component	Top MD (ft)	Btm MD (ft)
CEMENT	7,195.0	7,294.0

PLUG BACK Report Date: 4/1/2002 00:00

Component	Top MD (ft)	Btm MD (ft)
CEMENT	7,294.0	7,305.0

CONDUCTOR CASING Report Date: 1/25/2002 00:00

Item	OD (in)	Grade	Wt. (ppf)	TopMD (ft)	BtmMD (ft)
CASING JOINT(S)	14.000			20.0	60.0

SURFACE CASING Report Date: 3/17/2002 00:00

Item	OD (in)	Grade	Wt. (ppf)	TopMD (ft)	BtmMD (ft)
CASING JOINT(S)	9.625	K-55	36.00	20.0	965.4
	9.625		36.00	965.4	965.4
CASING JOINT(S)	9.625	K-55	36.00	965.4	1,012.8
GUIDE SHOE	9.625			1,012.8	1,014.0

PRODUCTION CASING Report Date: 4/1/2002 00:00

Item	OD (in)	Grade	Wt. (ppf)	TopMD (ft)	BtmMD (ft)
CASING JOINT(S)	7.000	P-110	26.00	20.0	6,682.1
FLAG JOINT	7.000	P-110	26.00	6,682.1	6,705.0
FLAG JOINT	7.000	P-110	26.00	6,705.0	6,727.5
CASING JOINT(S)	7.000	P-110	26.00	6,727.5	7,204.3
FLOAT COLLAR	7.000		26.00	7,204.3	7,204.4
CASING JOINT(S)	7.000	P-110	26.00	7,204.4	7,292.8
FLOAT SHOE	7.000		26.00	7,292.8	7,294.0

Well: 375X-34S S/T/R: 34S/30S/24E

CASING CEMENT DETAIL
- - -
Sfc Csg. Cmt Vol.: 643 cf
Hole Size: 12-1/4" (9-5/8" Casing)
Top Job: NO
Rtns to Sfc: YES
TTOC: NA
- - -

Interm Csg. Cmt Vol.: NONE
Hole Size:
Top Job:
Rtns to Sfc:
TTOC:'
- - -

Prod. Csg. Cmt Vol.: 844 cf
Hole Size: 8-3/4" (7" Casing)
Top Job: NO
Rtns to Sfc: YES
TTOC: NA
- - -

Liner Cmt Vol.: NONE
Hole Size:
Top Job:
Rtns to Sfc:
TTOC:
- - -
Top of Formation:
UBA: 6763'
BLW: 7216'

Volume Behind Pipe:
1.3 Yield Assumed
Theoretical Calculations (TTOC)

OCCIDENTAL OF ELK HILLS INC

375XA-34S

Event: WELL MAINT - RIGLESS
Event End:
Sec. Reason:

Ground Level: 810.9ft
Datum: ORIGINAL KB @ 833.90ft (default)
API No.: 0403022194

Wellbore: ORIGINAL HOLE
PBMD: 1,439.0ft
Btm TMD: 4,993.0ft
Spud Date: 3/18/2003 00:00
BH Coord X: 6,149,742.23uss ft
BH Coord Y: 2,288,480.60uss ft

Casing Shoes (ft)	Schematic (8/4/2009)	Openings Top/Btm/Type/Status

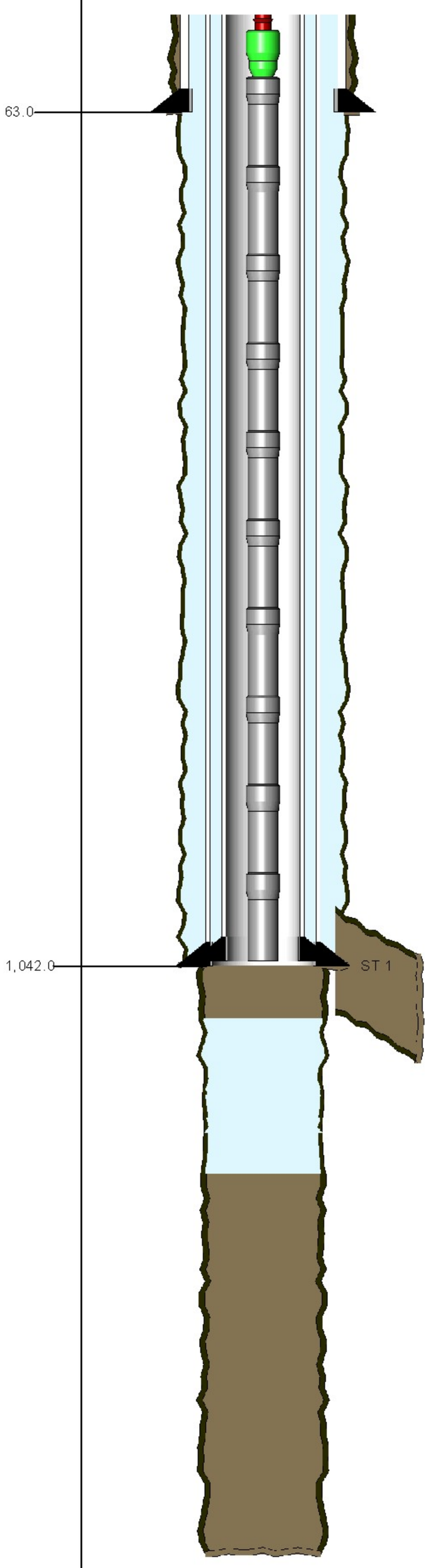

TUBING STRING Report Date: 10/5/2003 00:00

Component	Top MD (ft)	Btm MD (ft)
TH-DBB	23.0	23.6
FATNIP	23.6	24.3
TBGJNT	24.3	2,082.4
GLM-V	2,082.4	2,090.7
TBGJNT	2,090.7	3,601.3
GLM-V	3,601.3	3,610.2
TBGJNT	3,610.2	4,803.9
GLM-V	4,803.9	4,812.4
TBGJNT	4,812.4	5,597.8
GLM-V	5,597.8	5,606.6
TBGJNT	5,606.6	6,108.3
GLM-V	6,108.3	6,117.1
TBGJNT	6,117.1	6,588.9
GLM-V	6,588.9	6,597.2
PUPJNT	6,597.2	6,603.2
ON-OFF	6,603.2	6,604.8
PKR-S	6,604.8	6,610.4
TBGJNT	6,610.4	6,736.6
SS-C	6,736.6	6,740.9
TBGJNT	6,740.9	6,772.4
PKR-S	6,772.4	6,778.0
TBGJNT	6,778.0	6,809.4
SS-O	6,809.4	6,813.7
TBGJNT	6,813.7	6,845.2
LOCSUB	6,845.2	6,845.5
PKR-S	6,845.5	6,850.5
SPCSUB	6,850.5	6,853.7
XO	6,853.7	6,854.2
PUPJNT	6,854.2	6,860.2
PNIP-O	6,860.2	6,861.6
WLREG	6,861.6	6,862.1

CONDUCTOR CASING Report Date: 3/19/2003 00:00

Item	OD (in)	Grade	Wt. (ppf)	TopMD (ft)	BtmMD (ft)
CASING JOINT(S)	14.000			23.0	63.0

SURFACE CASING Report Date: 3/23/2003 00:00

Item	OD (in)	Grade	Wt. (ppf)	TopMD (ft)	BtmMD (ft)
CASING JOINT(S)	9.625	K-55	36.00	23.0	997.1
	9.625		36.00	997.1	997.1
CASING JOINT(S)	9.625	K-55	36.00	997.1	1,040.8
GUIDE SHOE	9.625	K-55	36.00	1,040.8	1,042.0

PRODUCTION CASING Report Date: 4/16/2003 00:00

Item	OD (in)	Grade	Wt. (ppf)	TopMD (ft)	BtmMD (ft)
CASING JOINT(S)	7.000	N-80	26.00	23.0	5,116.3
CASING JOINT(S)	7.000	P-110	26.00	5,116.3	6,913.6
FLAG JOINT	7.000	P-110	26.00	6,913.6	6,933.4
CASING JOINT(S)	7.000	P-110	26.00	6,933.4	7,152.6
FLOAT COLLAR	7.000	P-110	26.00	7,152.6	7,154.1
CASING JOINT(S)	7.000	P-110	26.00	7,154.1	7,240.2
FLOAT SHOE	7.000	P-110	26.00	7,240.2	7,242.0

Well: 375XA-34S S/T/R: 34/30S/24E
Last Well Status: May 20. 2003
Status Date: P & A

CASING CEMENT DETAIL
- - -
Sfc Csg. Cmt Vol.: 674 cf
Hole Size: 12.25
Top Job: no
Rtns to Sfc: 56 cf
TOC: sfc
- - -

Interm Csg. Cmt Vol.:
Hole Size:
Top Job:
Rtns to Sfc:
TOC:
- - -

Prod. Csg. Cmt Vol.: 1811 cf
Hole Size: 8.75"
Top Job: no
Rtns to Sfc: 123 cf
TOC: sfc

Liner Cmt Vol.:
Hole Size:
Top Job:
Rtns to Sfc:
TOC:
- - -
Top of Formation:
UBA: 6783'
BLW: 7147'

Volume Behind Pipe:
1.3 Yield Assumed
Theoretical Calculations (TTOC)
JEP

OCCIDENTAL OF ELK HILLS INC

375XA-34S-RD1

Event: WELL MAINT - RIGLESS
Event End:
Sec. Reason:

Ground Level: 810.9ft
Datum: ORIGINAL KB @ 833.90ft (default)
API No.: 0403022194

Wellbore: ST 1
PBMD: 7,153.0ft
Btm TMD: 7,260.0ft
Spud Date: 3/18/2003 00:00
BH Coord X: 6,149,592.39uss ft
BH Coord Y: 2,288,392.92uss ft

Casing Shoes (ft) | Schematic (8/3/2009) | Openings Top/Btm/Type/Status

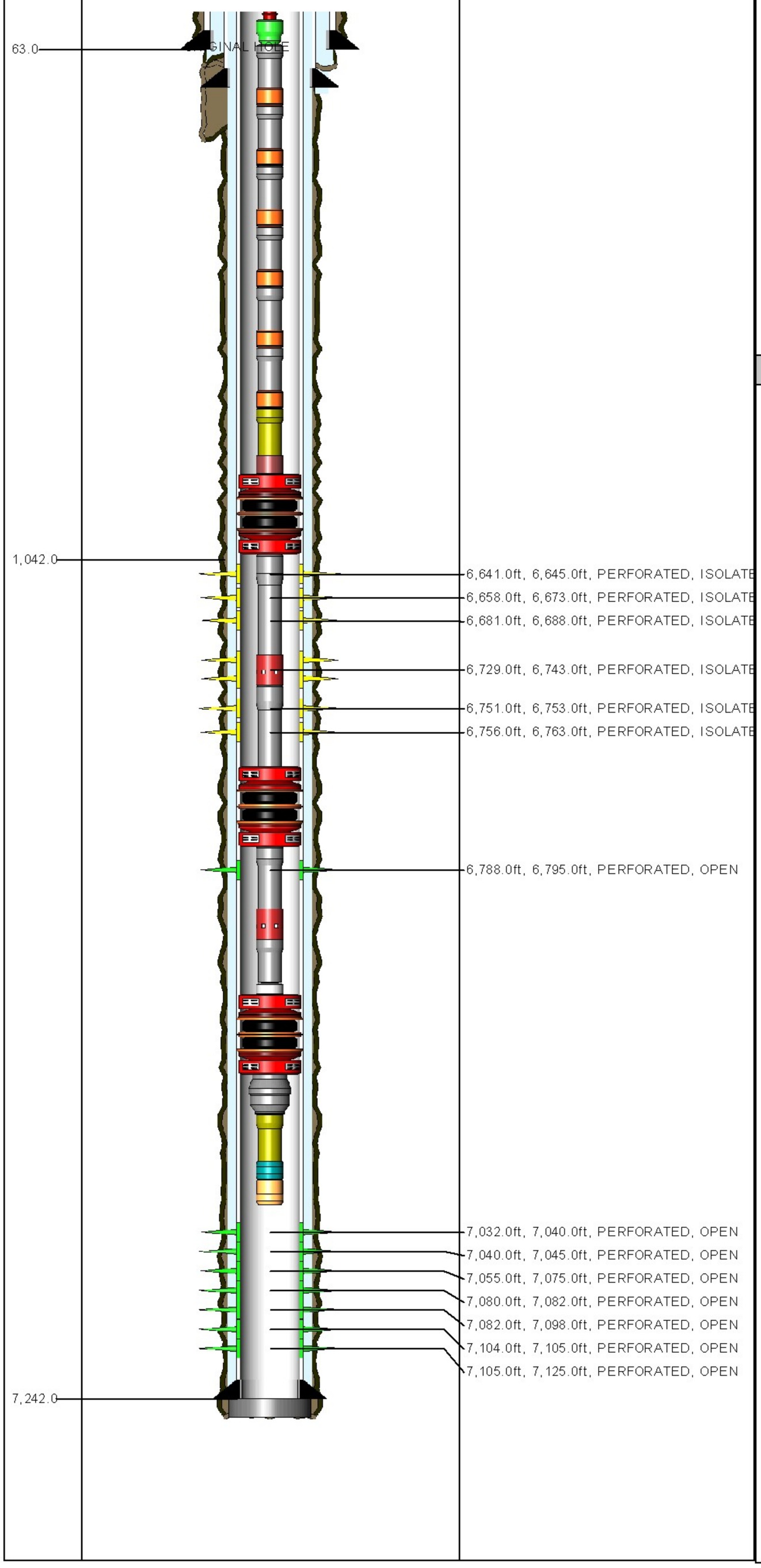

TUBING STRING Report Date: 10/5/2003 00:00

Component	Top MD (ft)	Btm MD (ft)
TH-DBB	23.0	23.6
FATNIP	23.6	24.3
TBGJNT	24.3	2,082.4
GLM-V	2,082.4	2,090.7
TBGJNT	2,090.7	3,601.3
GLM-V	3,601.3	3,610.2
TBGJNT	3,610.2	4,803.9
GLM-V	4,803.9	4,812.4
TBGJNT	4,812.4	5,597.8
GLM-V	5,597.8	5,606.6
TBGJNT	5,606.6	6,108.3
GLM-V	6,108.3	6,117.1
TBGJNT	6,117.1	6,588.9
GLM-V	6,588.9	6,597.2
PUPJNT	6,597.2	6,603.2
ON-OFF	6,603.2	6,604.8
PKR-S	6,604.8	6,610.4
TBGJNT	6,610.4	6,736.6
SS-C	6,736.6	6,740.9
TBGJNT	6,740.9	6,772.4
PKR-S	6,772.4	6,778.0
TBGJNT	6,778.0	6,809.4
SS-O	6,809.4	6,813.7
TBGJNT	6,813.7	6,845.2
LOCSUB	6,845.2	6,845.5
PKR-S	6,845.5	6,850.5
SPCSUB	6,850.5	6,853.7
XO	6,853.7	6,854.2
PUPJNT	6,854.2	6,860.2
PNIP-O	6,860.2	6,861.6
WLREG	6,861.6	6,862.1

PLUG BACK Report Date: 4/16/2003 00:00

Component	Top MD (ft)	Btm MD (ft)
CEMENT	7,242.0	7,260.0

CONDUCTOR CASING Report Date: 3/19/2003 00:00

Item	OD (in)	Grade	Wt. (ppf)	TopMD (ft)	BtmMD (ft)
CASING JOINT(S)	14.000			23.0	63.0

SURFACE CASING Report Date: 3/23/2003 00:00

Item	OD (in)	Grade	Wt. (ppf)	TopMD (ft)	BtmMD (ft)
CASING JOINT(S)	9.625	K-55	36.00	23.0	997.1
	9.625		36.00	997.1	997.1
CASING JOINT(S)	9.625	K-55	36.00	997.1	1,040.8
GUIDE SHOE	9.625	K-55	36.00	1,040.8	1,042.0

PRODUCTION CASING Report Date: 4/16/2003 00:00

Item	OD (in)	Grade	Wt. (ppf)	TopMD (ft)	BtmMD (ft)
CASING JOINT(S)	7.000	N-80	26.00	23.0	5,116.3
CASING JOINT(S)	7.000	P-110	26.00	5,116.3	6,913.6
FLAG JOINT	7.000	P-110	26.00	6,913.6	6,933.4
CASING JOINT(S)	7.000	P-110	26.00	6,933.4	7,152.6
FLOAT COLLAR	7.000	P-110	26.00	7,152.6	7,154.1
CASING JOINT(S)	7.000	P-110	26.00	7,154.1	7,240.2
FLOAT SHOE	7.000	P-110	26.00	7,240.2	7,242.0

Well: 375XA-34S-RD1 S/T/R: 34/30S/24E

CASING CEMENT DETAIL
- - -
Sfc Csg. Cmt Vol.: 674 cf
Hole Size: 12.25
Top Job: no
Rtns to Sfc: 56 cf
TOC: sfc
- - -

Interm Csg. Cmt Vol.:
Hole Size:
Top Job:
Rtns to Sfc:
TOC:
- - -

Prod. Csg. Cmt Vol.: 1811 cf
Hole Size: 8.75
Top Job: no
Rtns to Sfc: 123 cf
TOC: sfc

Liner Cmt Vol.:
Hole Size:
Top Job:
Rtns to Sfc:
TOC:
- - -
Top of Formation:
UBA: 6783'
BLW: 7147'

Volume Behind Pipe:
1.3 Yield Assumed
Theoretical Calculations (TTOC)
JEP

OCCIDENTAL OF ELK HILLS INC

376-33S

Event: WELL ENHANCEMENT
Event End:
Sec. Reason:

Ground Level: 987.0ft
Datum: ORIGINAL KB @ 1,007.00ft (default)
API No.: 0402989735

Wellbore: ORIGINAL HOLE
PBMD: 7,410.0ft
Btm TMD: 7,570.0ft
Spud Date: 5/1/1992 00:00
BH Coord X: 6,144,401.52uss ft
BH Coord Y: 2,288,303.50uss ft

Casing Shoes (ft)	Schematic (7/30/2009)	Openings Top/Btm/Type/Status

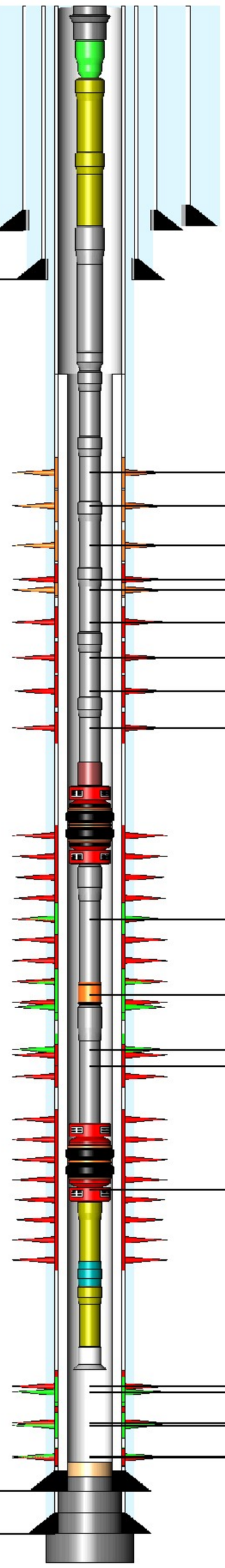

60.0
349.0
3,213.0
7,450.7
7,569.0

6,480.0ft, 6,495.0ft, PERFORATED, SQUE
6,510.0ft, 6,546.0ft, PERFORATED, SQUE
6,620.0ft, 6,650.0ft, PERFORATED, SQUE
6,670.0ft, 6,680.0ft, PERFORATED, ABAN
6,676.0ft, 6,695.0ft, PERFORATED, SQUE
6,770.0ft, 6,780.0ft, PERFORATED, ABAN
6,810.0ft, 6,850.0ft, PERFORATED, ABAN
6,862.0ft, 6,882.0ft, PERFORATED, ABAN
6,910.0ft, 6,992.0ft, PERFORATED, ABAN
7,012.0ft, 7,120.0ft, PERFORATED, ABAN
7,056.0ft, 7,080.0ft, PERFORATED, OPEN
7,100.0ft, 7,125.0ft, PERFORATED, OPEN
7,135.0ft, 7,150.0ft, PERFORATED, OPEN
7,140.0ft, 7,160.0ft, PERFORATED, ABAN
7,170.0ft, 7,186.0ft, PERFORATED, ABAN
7,200.0ft, 7,220.0ft, PERFORATED, ABAN
7,204.0ft, 7,240.0ft, PERFORATED, OPEN
7,240.0ft, 7,270.0ft, PERFORATED, ABAN
7,245.0ft, 7,270.0ft, PERFORATED, OPEN
7,296.0ft, 7,358.0ft, PERFORATED, OPEN
7,300.0ft, 7,360.0ft, PERFORATED, ABAN

TUBING STRING Report Date: 2/13/2002 00:00

Component	Top MD (ft)	Btm MD (ft)
TH-SGL	20.0	20.6
FATNIP	20.6	22.0
PUPJNT	22.0	26.1
PUPJNT	26.1	32.2
TBGJNT	32.2	6,124.5
XO	6,124.5	6,125.6
TBGJNT	6,125.6	7,008.5
ON-OFF	7,008.5	7,010.2
PKR-S	7,010.2	7,013.8
TBGJNT	7,013.8	7,107.6
GLM-V	7,107.6	7,114.3
TBGJNT	7,114.3	7,176.0
PKR-S	7,176.0	7,181.7
PUPJNT	7,181.7	7,185.6
PNIP-O	7,185.6	7,186.7
PUPJNT	7,186.7	7,192.7
BELCOL	7,192.7	7,193.1

PLUG BACK Report Date: 7/8/2004 00:00

Component	Top MD (ft)	Btm MD (ft)
FILL	7,340.0	7,410.0

PLUG BACK Report Date: 2/8/2002 00:00

Component	Top MD (ft)	Btm MD (ft)
CEMENT	7,410.0	7,450.7

PLUG BACK Report Date: 2/8/2002 00:00

Component	Top MD (ft)	Btm MD (ft)
CEMENT	7,450.7	7,465.0

PLUG BACK Report Date: 2/6/2002 00:00

Component	Top MD (ft)	Btm MD (ft)
CEMENT	7,465.0	7,569.0

PLUG BACK Report Date: 6/4/1992 00:00

Component	Top MD (ft)	Btm MD (ft)
CEMENT	7,569.0	7,570.0

CONDUCTOR CASING Report Date: 5/1/1992 00:00

Item	OD (in)	Grade	Wt. (ppf)	TopMD (ft)	BtmMD (ft)
CASING JOINT(S)	20.000			20.0	60.0

SURFACE CASING Report Date: 5/12/1992 00:00

Item	OD (in)	Grade	Wt. (ppf)	TopMD (ft)	BtmMD (ft)
CASING JOINT(S)	13.375	K-55	48.00	20.0	349.0

INTERMEDIATE CASING Report Date: 5/17/1992 00:00

Item	OD (in)	Grade	Wt. (ppf)	TopMD (ft)	BtmMD (ft)
CASING JOINT(S)	9.625	K-55	40.00	20.0	3,213.0

PRODUCTION CASING Report Date: 6/4/1992 00:00

Item	OD (in)	Grade	Wt. (ppf)	TopMD (ft)	BtmMD (ft)
CASING JOINT(S)	7.000	N-80	26.00	20.0	1,432.0
CASING JOINT(S)	7.000	K-55	23.00	1,432.0	4,869.8
CASING JOINT(S)	7.000	K-55	26.00	4,869.8	5,972.0
FLAG JOINT	7.000	K-55	26.00	5,972.0	5,997.2
CASING JOINT(S)	7.000	K-55	26.00	5,997.2	6,580.3
CASING JOINT(S)	7.000	N-80	26.00	6,580.3	7,478.6
FLOAT COLLAR	7.000	N-80	26.00	7,478.6	7,480.4
CASING JOINT(S)	7.000	N-80	26.00	7,480.4	7,567.0
FLOAT SHOE	7.000	N-80	26.00	7,567.0	7,569.0

INNER LINER Report Date: 2/7/2002 00:00

Item	OD (in)	Grade	Wt. (ppf)	TopMD (ft)	BtmMD (ft)
LINER HANGER	7.000			6,157.0	6,170.7
CASING JOINT(S)	5.000	N-80	15.00	6,170.7	7,409.0
LANDING COLLAR	5.000			7,409.0	7,410.1
CASING JOINT(S)	5.000	N-80	15.00	7,410.1	7,447.9
FLOAT SHOE	5.000			7,447.9	7,450.7

Well: 376-33S S/T/R: 33S/30S/24E

CASING CEMENT DETAIL
- - -
Sfc Csg. Cmt Vol.: 550 cf
Hole Size: 17.5"
Top Job: No
Rtns to Sfc: 10 cf
TOC: Sfc
- - -

Interm Csg. Cmt Vol.: 1600 cf
Hole Size: 12.25"
Top Job: No
Rtns to Sfc: 200 cf
TOC: Sfc
- - -

Prod. Csg. Cmt Vol.: 2100 cf
Hole Size: 8.75"
Top Job: No
Rtns to Sfc:
TTOC: Sfc

Liner Cmt Vol.:
Hole Size:
Top Job:
Rtns to Sfc:
TTOC:
- - -
Top of Formation:
UBA: 6805'
BLW: 7366'

Volume Behind Pipe:
1.3 Yield Assumed
Theoretical Calculations (TTOC)

OCCIDENTAL OF ELK HILLS INC

376-34S

Event: WELL MAINT - RIGLESS
Event End: 5/10/2007 00:00
Sec. Reason:

Ground Elev: 833.0ft
KB to Ground: 14.0ft
Datum: ORIGINAL KB @ 847.00ft (default)
API No.: 0402967232

Wellbore: ORIGINAL HOLE
Top TMD: 14.0ft
PBMD: 7,172.0ft
Btm TMD: 7,325.0ft
Spud Date: 7/16/1982 00:00
BH Coord X: 6,149,684.74uss ft BH Coord Y: 2,288,161.68uss

Casing Shoes (ft) | Schematic (6/1/2007) | Openings Top/Btm/Type/Status

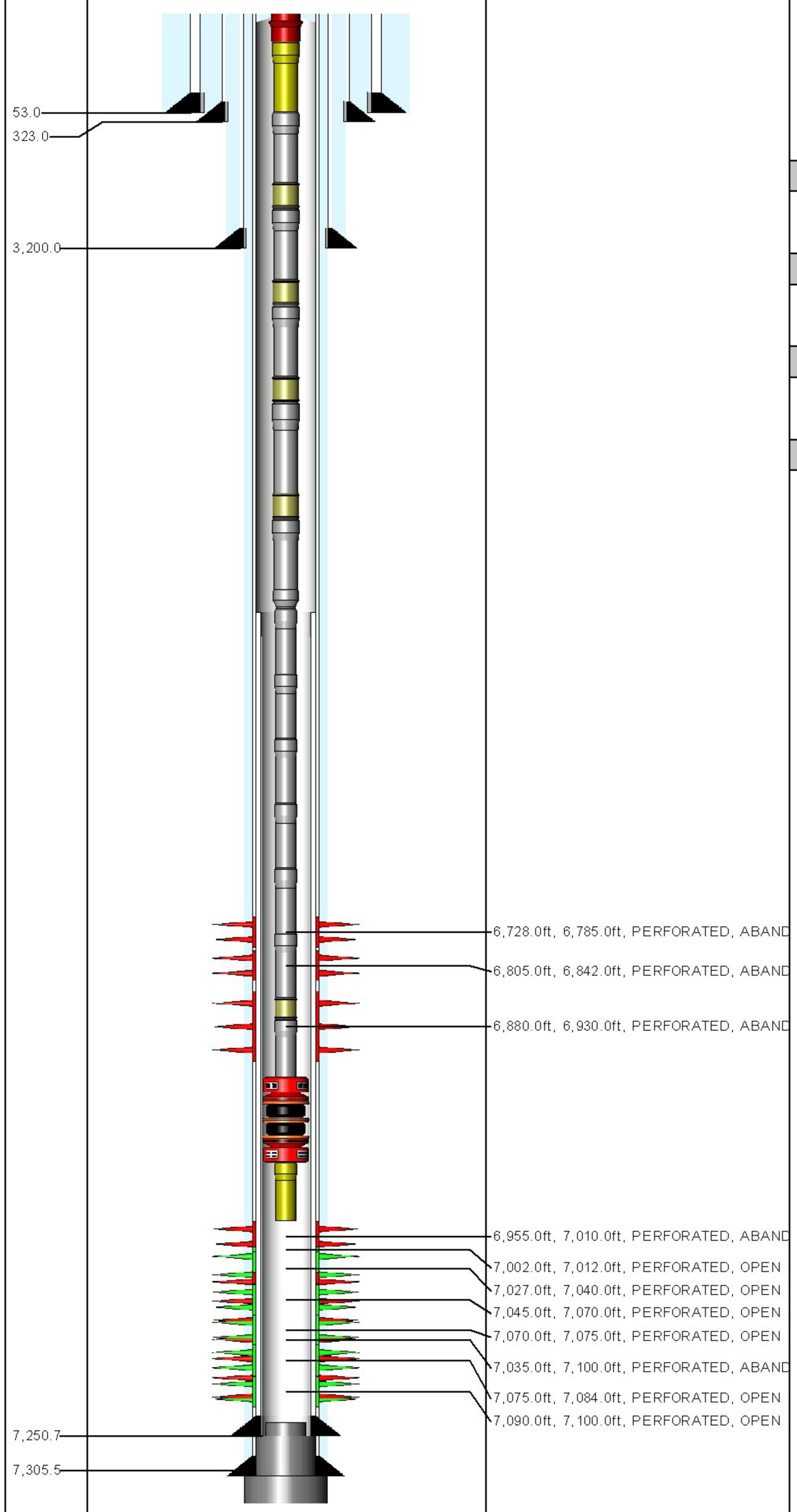

TUBING STRING Report Date: 3/1/2003 00:00

Component	Top MD (ft)	Btm MD (ft)
TH-DBB	14.0	14.6
PUPJNT	14.6	31.3
TBGJNT	31.3	2,189.5
GLM-D	2,189.5	2,198.0
TBGJNT	2,198.0	3,992.0
GLM-D	3,992.0	4,000.9
TBGJNT	4,000.9	5,192.2
GLM-D	5,192.2	5,201.0
TBGJNT	5,201.0	6,205.0
GLM-D	6,205.0	6,213.5
TBGJNT	6,213.5	6,371.7
XO	6,371.7	6,372.8
TBGJNT	6,372.8	6,901.0
GLM-D	6,901.0	6,907.7
TBGJNT	6,907.7	6,938.1
PKR-S	6,938.1	6,942.1
PUPJNT	6,942.1	6,946.2

PLUG BACK Report Date: 5/12/2002 00:00

Component	Top MD (ft)	Btm MD (ft)
CEMENT	7,172.0	7,250.7

PLUG BACK Report Date: 5/8/2002 00:00

Component	Top MD (ft)	Btm MD (ft)
CEMENT	7,250.7	7,264.0

PLUG BACK Report Date: 10/5/1982 00:00

Component	Top MD (ft)	Btm MD (ft)
CEMENT	7,264.0	7,306.0

PLUG BACK Report Date: 8/9/1982 00:00

Component	Top MD (ft)	Btm MD (ft)
CEMENT	7,306.0	7,325.0

CONDUCTOR CASING Report Date: 7/16/1982 00:00

Item Description	Btm MD(ft)
CASING JOINT(S) 20 in,	53.0

SURFACE CASING Report Date: 7/22/1982 00:00

Item Description	Btm MD(ft)
CASING JOINT(S) 13.375 in, , H-40, 48	323.0

INTERMEDIATE CASING Report Date: 7/28/1982 00:00

Item Description	Btm MD (ft)
CASING JOINT(S) 9.625 in, , K-55, 40	3,200.0

PRODUCTION CASING Report Date: 8/9/1982 00:00

Item Description	Btm MD (ft)
CASING JOINT(S) 7 in, , K-55, 26	80.5
CASING JOINT(S) 7 in, , K-55, 23	5,004.4
CASING JOINT(S) 7 in, , K-55, 26	6,160.9
FLAG JOINT 7 in, , K-55, 26	6,175.0
CASING JOINT(S) 7 in, , K-55, 26	7,263.8
FLOAT COLLAR 7 in, , K-55, 26	7,265.9
CASING JOINT(S) 7 in, , K-55, 26	7,305.0
GUIDE SHOE 7 in, , K-55, 26	7,306.0

INNER LINER Report Date: 5/8/2002 00:00

Item Description	Btm MD (ft)
LINER HANGER 6.276 in, , L-80	6,413.4
LINER HANGER PACKER 6.276 in, , L-80, 26	6,420.1
PBR 6.276 in, , L-80	6,423.0
LINER HANGER 6.276 in, , L-80	6,429.5
CASING JOINT(S) 5 in, , P-110, 18	7,188.7
LANDING COLLAR 5 in, , L-80	7,190.1
PUP JOINT 5 in, , P-110, 18	7,206.8
FLOAT COLLAR 5 in, , L-80	7,207.8
CASING JOINT(S) 5 in, , P-110, 18	7,248.8
FLOAT SHOE 5 in, , L-80	7,250.7

S/T/R: 376-34S 34S/30S/24E

CASING CEMENT DETAIL
- - -
Sfc Csg. Cmt Vol.: 550cf
Hole Size: 17-1/2"
Top Job:
Rtns to Sfc: Yes
TOC:
- - -
Int. Csg. Cmt Vol.: 1930cf
Hole Size: 12-1/4"
Top Job:
Rtns to Sfc: Yes
TOC:
- - -
Prod Csg. Cmt Vol.: 1470cf
Hole Size: 8-3/4"
Rtns to Sfc: none
TOC: TTOC at surface
- - -
Liner Cmt Vol.: 125 cf
Hole Size: 6"
Rtns to Sfc: none
TOC: TTOC at surface

Top of Formation:
UBA: 6729'
BLW: 7119'

Volume Behind Pipe
1.3 Yield Assumed on
Theoretical Calculations

OCCIDENTAL OF ELK HILLS INC

377-33S

Event: WELL MAINT - RIGLESS
Event End:
Sec. Reason:

Ground Level: 1,040.0ft
Datum: ORIGINAL KB @ 1,055.00ft (default)
API No.: 0402953731

Wellbore: ORIGINAL HOLE
PBMD: 7,347.0ft
Btm TMD: 7,450.0ft
Spud Date: 9/21/1976 00:00
BH Coord X: 6,144,425.64uss ft
BH Coord Y: 2,287,790.74uss ft

Casing Shoes (ft) | Schematic (7/30/2009) | Openings Top/Btm/Type/Status

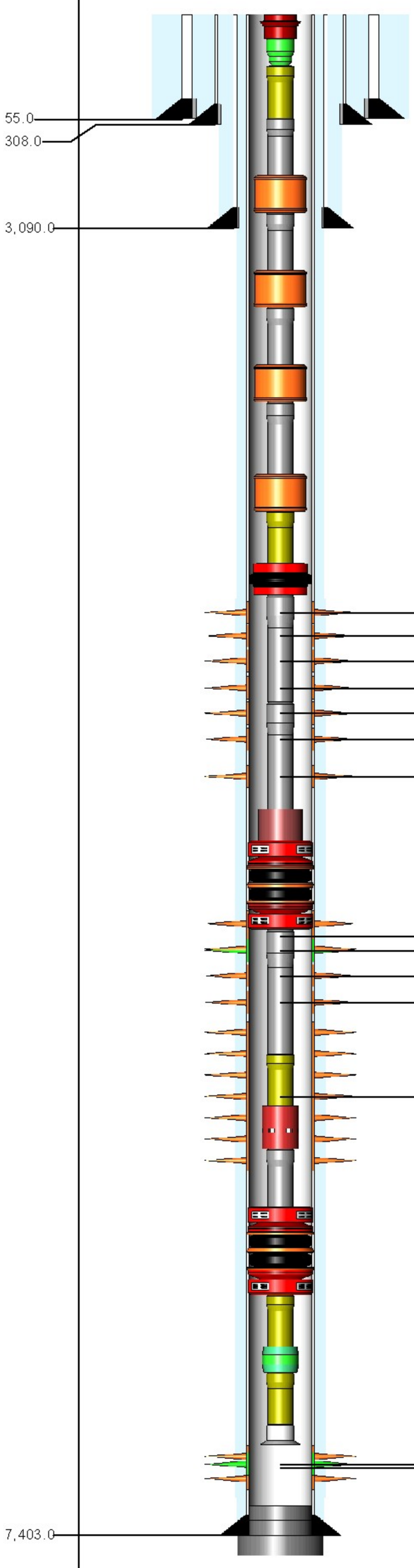

6,215.0ft, 6,245.0ft, PERFORATED, SQUE
6,255.0ft, 6,350.0ft, PERFORATED, SQUE
6,374.0ft, 6,412.0ft, PERFORATED, SQUE
6,450.0ft, 6,500.0ft, PERFORATED, SQUE
6,520.0ft, 6,582.0ft, PERFORATED, SQUE
6,602.0ft, 6,690.0ft, PERFORATED, SQUE
6,734.0ft, 6,788.0ft, PERFORATED, SQUE
6,804.0ft, 6,882.0ft, PERFORATED, SQUE
6,872.0ft, 6,880.0ft, PERFORATED, OPEN
6,898.0ft, 7,025.0ft, PERFORATED, SQUE
7,040.0ft, 7,105.0ft, PERFORATED, SQUE
7,120.0ft, 7,206.0ft, PERFORATED, SQUE
7,260.0ft, 7,281.0ft, PERFORATED, OPEN
7,244.0ft, 7,290.0ft, PERFORATED, SQUE

TUBING STRING Report Date: 7/20/2006 00:00

Component	Top MD (ft)	Btm MD (ft)
TH-DBB	15.0	15.7
FATNIP	15.7	16.3
PUPJNT	16.3	18.4
TBGJNT	18.4	2,603.1
GLM-V	2,603.1	2,612.0
TBGJNT	2,612.0	4,391.0
GLM-V	4,391.0	4,399.9
TBGJNT	4,399.9	5,514.4
GLM-V	5,514.4	5,523.3
TBGJNT	5,523.3	6,115.4
GLM-V	6,115.4	6,124.3
PUPJNT	6,124.3	6,134.5
PKR-D	6,134.5	6,141.2
TBGJNT	6,141.2	6,797.2
ON-OFF	6,797.2	6,798.7
PKR-S	6,798.7	6,805.4
TBGJNT	6,805.4	7,179.4
PUPJNT	7,179.4	7,189.6
SS-O	7,189.6	7,193.8
TBGJNT	7,193.8	7,225.4
PKR-S	7,225.4	7,229.4
PUPJNT	7,229.4	7,233.6
LNDNIP	7,233.6	7,234.7
PUPJNT	7,234.7	7,238.9
BELCOL	7,238.9	7,239.3

PLUG BACK Report Date: 7/18/2001 00:00

Component	Top MD (ft)	Btm MD (ft)
CEMENT	7,347.0	7,352.0

PLUG BACK Report Date: 11/27/1976 00:00

Component	Top MD (ft)	Btm MD (ft)
CEMENT	7,352.0	7,403.0

PLUG BACK Report Date: 11/26/1976 00:00

Component	Top MD (ft)	Btm MD (ft)
CEMENT	7,403.0	7,450.0

CONDUCTOR CASING Report Date: 9/21/1976 00:00

Item	OD (in)	Grade	Wt. (ppf)	TopMD (ft)	BtmMD (ft)
CASING JOINT(S)	20.000			15.0	55.0

SURFACE CASING Report Date: 11/7/1976 00:00

Item	OD (in)	Grade	Wt. (ppf)	TopMD (ft)	BtmMD (ft)
CASING JOINT(S)	13.375	H-40	48.00	15.0	308.0

INTERMEDIATE CASING Report Date: 11/11/1976 00:00

Item	OD (in)	Grade	Wt. (ppf)	TopMD (ft)	BtmMD (ft)
CASING JOINT(S)	9.625	K-55	40.00	15.0	3,090.0

PRODUCTION CASING Report Date: 11/26/1976 00:00

Item	OD (in)	Grade	Wt. (ppf)	TopMD (ft)	BtmMD (ft)
CASING JOINT(S)	7.000	K-55	26.00	15.0	77.3
CASING JOINT(S)	7.000	K-55	23.00	77.3	5,268.1
CASING JOINT(S)	7.000	K-55	26.00	5,268.1	6,077.2
FLAG JOINT	7.000	K-55	26.00	6,077.2	6,097.4
CASING JOINT(S)	7.000	K-55	26.00	6,097.4	7,357.0
FLOAT COLLAR	7.000		26.00	7,357.0	7,358.9
CASING JOINT(S)	7.000	K-55	26.00	7,358.9	7,401.0
FLOAT SHOE	7.000		26.00	7,401.0	7,403.0

Well: 377-33S S/T/R: 33S/30S/24E

CASING CEMENT DETAIL
- - -
Sfc Csg. Cmt Vol.: 330 cf
Hole Size: 17.5"
Top Job: No
Rtns to Sfc: 63 cf
TOC: Sfc
- - -

Interm Csg. Cmt Vol.: 1334 cf
Hole Size: 12.25"
Top Job: No
Rtns to Sfc: 511 cf
TOC: Sfc
- - -

Prod. Csg. Cmt Vol.: 1600 cf
Hole Size: 8.75"
Top Job: No
Rtns to Sfc: 90 cf
TOC: Sfc

Liner Cmt Vol.:
Hole Size:
Top Job:
Rtns to Sfc:
TTOC:
- - -
Top of Formation:
UBA: 6801'
BLW: 7349'

Volume Behind Pipe:
1.3 Yield Assumed
Theoretical Calculations (TTOC)

Event: WELL MAINT - RIG
Event End: 8/24/2007 00:00
Sec. Reason: SPLIT
End Status: FINISHED - SUCCESS
Well Classification: DEVELOPMENT - CLASS II

OCCIDENTAL OF ELK HILLS INC

377-35S

Ground Level: 749.0ft
Datum: ORIGINAL KB @ 761.00ft (default)
API No.: 0402953881

Wellbore: ORIGINAL HOLE
PBMD: 7,185.0ft
Btm TMD: 8,500.0ft
Spud Date: 9/25/1976 00:00
BH Coord X: 6,154,788.68uss ft
BH Coord Y: 2,287,428.26uss ft

Casing Shoes (ft)	Schematic (9/1/2007)	Openings Top/Btm/Type/Status
52.0		
350.0		
3,400.0		
		6,551.0ft, 6,551.1ft, WSO PERFS, SQUEEZE
		6,635.0ft, 6,642.0ft, PERFORATED, OPEN
		6,642.0ft, 6,662.0ft, PERFORATED, OPEN
		6,662.0ft, 6,682.0ft, PERFORATED, OPEN
		6,682.0ft, 6,702.0ft, PERFORATED, OPEN
		6,705.0ft, 6,724.0ft, PERFORATED, OPEN
		6,734.0ft, 6,742.0ft, PERFORATED, OPEN
		6,755.0ft, 6,760.0ft, PERFORATED, OPEN
		6,760.0ft, 6,770.0ft, PERFORATED, OPEN
		6,787.0ft, 6,792.0ft, PERFORATED, OPEN
		6,900.0ft, 6,904.0ft, PERFORATED, OPEN
		6,926.0ft, 6,932.0ft, PERFORATED, OPEN
		7,009.0ft, 7,021.0ft, PERFORATED, OPEN
		7,026.0ft, 7,034.0ft, PERFORATED, OPEN
		7,044.0ft, 7,059.0ft, PERFORATED, OPEN
		7,067.0ft, 7,076.0ft, PERFORATED, OPEN
		7,086.0ft, 7,096.0ft, PERFORATED, OPEN
		7,104.0ft, 7,109.0ft, PERFORATED, OPEN
		7,112.0ft, 7,116.0ft, PERFORATED, OPEN
		7,165.0ft, 7,179.0ft, PERFORATED, OPEN
		7,195.0ft, 7,215.0ft, PERFORATED, SQUEEZ
		7,225.0ft, 7,275.0ft, PERFORATED, SQUEEZ
		7,287.0ft, 7,332.0ft, PERFORATED, SQUEEZ
		7,345.0ft, 7,400.0ft, PERFORATED, ISOLATE
		7,345.0ft, 7,415.0ft, PERFORATED, ISOLATE
7,485.0		7,465.0ft, 7,520.0ft, PERFORATED, ISOLATE
		7,545.0ft, 7,580.0ft, PERFORATED, ISOLATE
		7,590.0ft, 7,642.0ft, PERFORATED, ISOLATE
		7,680.0ft, 7,710.0ft, PERFORATED, ISOLATE
7,788.0		

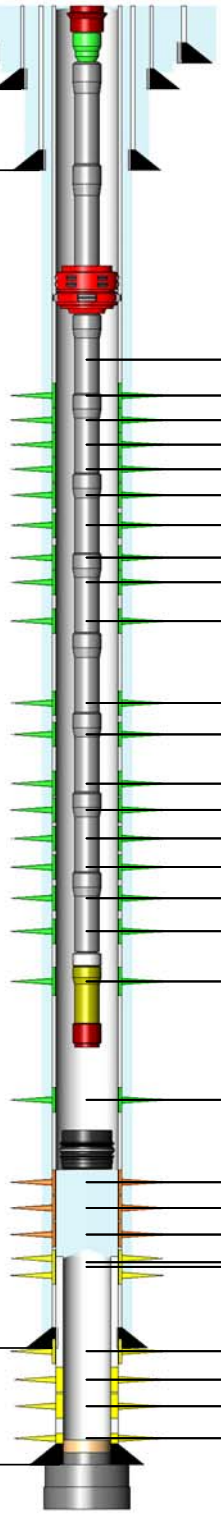

ROD STRING Report Date: 8/24/2007 00:00

Component	Top MD (ft)	Btm MD (ft)
POLROD	0.0	36.0
ROD	36.0	1,716.0
ROD	1,716.0	3,726.0
ROD	3,726.0	4,476.0
R-4PER	4,476.0	7,086.0
RSTBAR	7,086.0	7,090.0
INSPMP	7,090.0	7,120.0

TUBING STRING Report Date: 8/24/2007 00:00

Component	Top MD (ft)	Btm MD (ft)
TH-DBB	12.0	12.8
FATNIP	12.8	13.4
TBGJNT	13.4	6,385.4
AC	6,385.4	6,387.8
TBGJNT	6,387.8	7,111.2
PMPSH	7,111.2	7,111.8
PUPJNT	7,111.8	7,119.9
STCOLL	7,119.9	7,120.4

PLUG BACK Report Date: 8/24/2005 00:00

Component	Top MD (ft)	Btm MD (ft)
BP-DR	7,185.0	7,188.5

PLUG BACK Report Date: 10/13/1999 00:00

Component	Top MD (ft)	Btm MD (ft)
FILL	7,698.0	7,739.0

PLUG BACK Report Date: 2/17/1989 00:00

Component	Top MD (ft)	Btm MD (ft)
CEMENT	7,739.0	7,788.0

PLUG BACK Report Date: 11/27/1988 00:00

Component	Top MD (ft)	Btm MD (ft)
CEMENT	7,788.0	7,790.0

PLUG BACK Report Date: 11/27/1988 00:00

Component	Top MD (ft)	Btm MD (ft)
CEMENT	7,790.0	8,500.0

CONDUCTOR CASING Report Date: 9/25/1976 00:00

Item	OD (in)	Grade	Wt. (ppf)	TopMD (ft)	BtmMD (ft)
CASING JOINT(S)	20.000			12.0	52.0

SURFACE CASING Report Date: 1/12/1977 00:00

Item	OD (in)	Grade	Wt. (ppf)	TopMD (ft)	BtmMD (ft)
CASING JOINT(S)	13.375	H-40	48.00	12.0	350.0

INTERMEDIATE CASING Report Date: 1/17/1977 00:00

Item	OD (in)	Grade	Wt. (ppf)	TopMD (ft)	BtmMD (ft)
CASING JOINT(S)	9.625	K-55	40.50	12.0	3,400.0

PRODUCTION CASING Report Date: 2/11/1977 00:00

Item	OD (in)	Grade	Wt. (ppf)	TopMD (ft)	BtmMD (ft)
CASING JOINT(S)	7.000	K-55	26.00	12.0	68.0
CASING JOINT(S)	7.000	K-55	23.00	68.0	4,743.0
FLAG JOINT	7.000	K-55	26.00	4,743.0	6,811.5
CASING JOINT(S)	7.000	K-55	26.00	6,811.5	6,832.6
CASING JOINT(S)	7.000	K-55	26.00	6,832.6	7,485.0

LINER Report Date: 11/25/1988 00:00

Item	OD (in)	Grade	Wt. (ppf)	TopMD (ft)	BtmMD (ft)
LINER HANGER	6.276		20.00	7,433.0	7,439.0
CASING JOINT(S)	5.500	K-55	20.00	7,439.0	7,739.0
FLOAT SHOE	5.500	K-55	20.00	7,739.0	7,788.0

Well: 377-35S S/T/R: 35S/30S/24E

CASING CEMENT DETAIL
- - -
Sfc Csg. Cmt Vol: 478cuft
Hole Size: 17.500"
Top Job: No
Rtns to Sfc: Yes
TOC: Surface
- - -

Interm Csg. Cmt Vol: 1704cuft
Hole Size: 9.625"
Top Job: No
Rtns to Sfc: Yes
TOC: Surface
- - -

Prod. Csg. Cmt Vol: 2000cuft
Hole Size: 8.750"
Top Job: No
Rtns to Sfc: No
TTOC: 6488' (by CBL)
- - -

Liner Cmt Vol: 135cuft
Hole Size: 8.500"
Top Job: N/A
Rtns to Sfc: N/A
TTOC: At top of linner (by CBL)
- - -
Top of Formation:
UBA: 7195'
BLW: 7710'

Volume Behind Pipe:
1.3 Yield Assumed
Theoretical Calculations (TTOC)

OCCIDENTAL OF ELK HILLS INC

377A-33S

Event: WELL MAINT - RIGLESS
Event End: 1/7/2009 00:00
Sec. Reason:

Ground Level: 1,068.0ft
Datum: ORIGINAL KB @ 1,100.00ft (default)
API No.: 0403023977

Wellbore: ORIGINAL HOLE
PBMD: 7,401.0ft
Btm TMD: 7,500.0ft
Spud Date: 12/11/2003 00:00
BH Coord X: 6,144,417.97uss ft
BH Coord Y: 2,286,636.10uss ft

Casing Shoes (ft) | Schematic (1/7/2009) | Openings Top/Btm/Type/Status

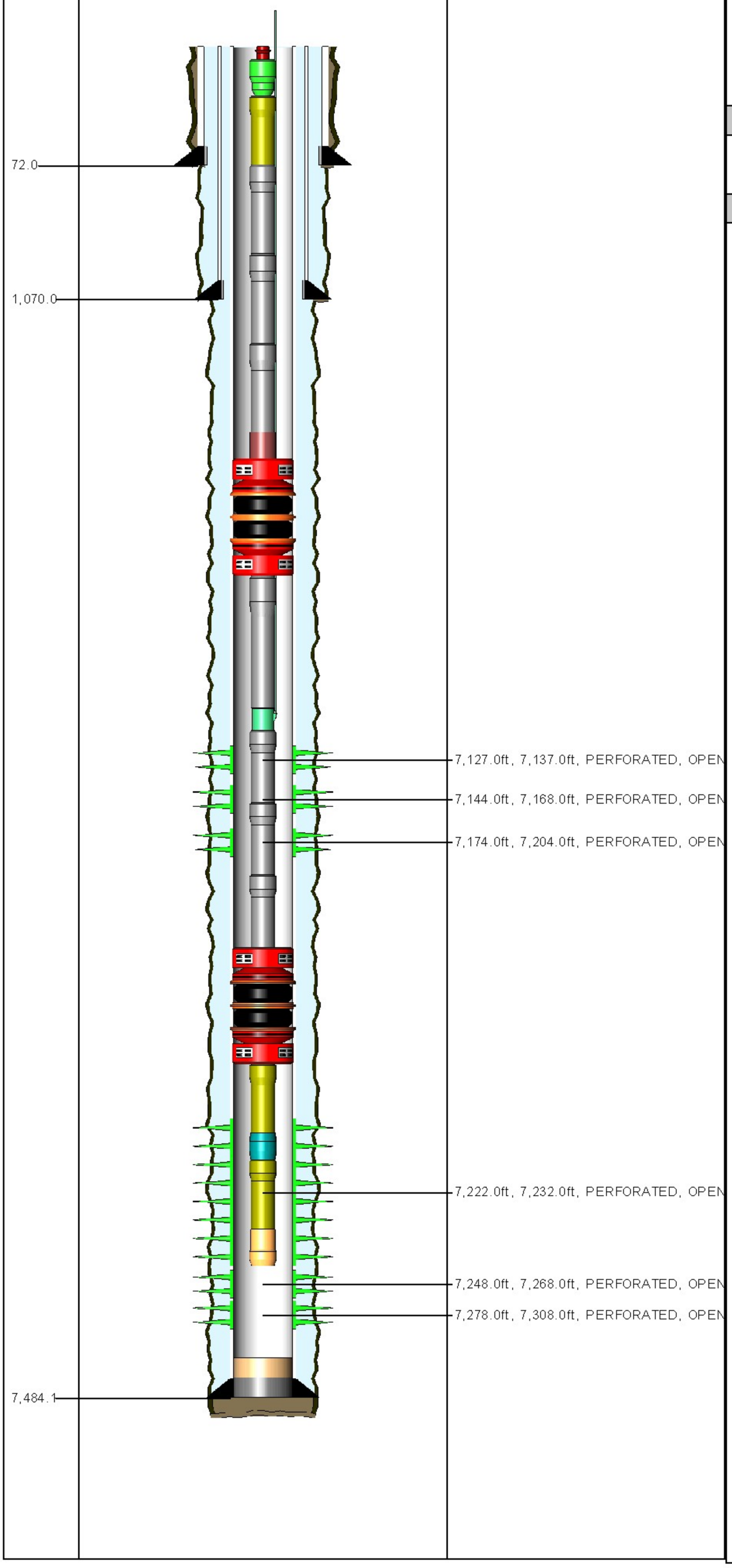

TUBING STRING Report Date: 1/15/2004 00:00

Component	Top MD (ft)	Btm MD (ft)
TH-DBB	32.0	32.8
FATNIP	32.8	33.4
PUPJNT	33.4	51.6
TBGJNT	51.6	7,069.0
ON-OFF	7,069.0	7,070.8
PKR-S	7,070.8	7,074.9
TBGJNT	7,074.9	7,106.3
INJM-V	7,106.3	7,116.0
TBGJNT	7,116.0	7,210.2
PKR-S	7,210.2	7,217.2
PUPJNT	7,217.2	7,223.3
PNIP-O	7,223.3	7,224.4
PUPJNT	7,224.4	7,230.4
WLREG	7,230.4	7,230.9

PLUG BACK Report Date: 5/14/2004 00:00

Component	Top MD (ft)	Btm MD (ft)
FILL	7,376.0	7,450.0

PLUG BACK Report Date: 1/9/2004 00:00

Component	Top MD (ft)	Btm MD (ft)
CEMENT	7,450.0	7,484.0

CONDUCTOR CASING Report Date: 12/12/2003 00:00

Item	OD (in)	Grade	Wt. (ppf)	TopMD (ft)	BtmMD (ft)
CASING JOINT(S)	14.000			32.0	72.0

SURFACE CASING Report Date: 12/14/2003 00:00

Item	OD (in)	Grade	Wt. (ppf)	TopMD (ft)	BtmMD (ft)
CASING JOINT(S)	9.625	K-55	36.00	32.0	1,024.7
	9.625	K-55		1,024.7	1,024.7
CASING JOINT(S)	9.625	K-55	36.00	1,024.7	1,068.8
GUIDE SHOE	9.625	K-55		1,068.8	1,070.0

PRODUCTION CASING Report Date: 12/28/2003 00:00

Item	OD (in)	Grade	Wt. (ppf)	TopMD (ft)	BtmMD (ft)
CASING JOINT(S)	7.000	N-80	26.00	32.0	6,159.6
FLAG JOINT	7.000	N-80	26.00	6,159.6	6,179.6
CASING JOINT(S)	7.000	L-80	26.00	6,179.6	7,401.0
FLOAT COLLAR	7.000			7,401.0	7,402.4
CASING JOINT(S)	7.000	L-80	26.00	7,402.4	7,482.5
FLOAT SHOE	7.000			7,482.5	7,484.0

Well: 377A-33S S/T/R: 33S/30S/24E

CASING CEMENT DETAIL
- - -
Sfc Csg. Cmt Vol.: 548 cf
Hole Size: 12.25"
Top Job: No
Rtns to Sfc: 45 cf
TOC: Sfc
- - -

Interm Csg. Cmt Vol.:
Hole Size:
Top Job:
Rtns to Sfc:
TOC:
- - -

Prod. Csg. Cmt Vol.: 2182 cf
Hole Size: 8.75"
Top Job: No
Rtns to Sfc:
TTOC: Sfc

Liner Cmt Vol.:
Hole Size:
Top Job:
Rtns to Sfc:
TTOC:
- - -
Top of Formation:
UBA: 6866'
BLW: 7437'

Volume Behind Pipe:
1.3 Yield Assumed
Theoretical Calculations (TTOC)

OCCIDENTAL OF ELK HILLS INC

377X-33S

Event: WELL MAINT - RIGLESS
Event End: 2/5/2007 00:00
Sec. Reason:

Ground Level: 1,038.1ft
Datum: ORIGINAL KB @ 1,058.10ft (default)
API No.: 0403016526

Wellbore: ORIGINAL HOLE
PBMD: 7,352.0ft
Btm TMD: 7,460.0ft
Spud Date: 9/14/2000 00:00
BH Coord X: 6,144,380.44uss ft
BH Coord Y: 2,287,457.77uss ft

Casing Shoes (ft) | Schematic (3/1/2007) | Openings Top/Btm/Type/Status

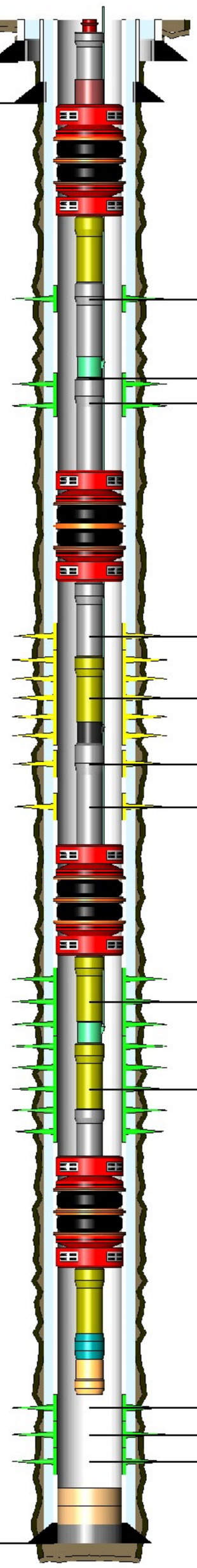

60.0
969.0
6,645.0ft, 6,663.0ft, PERFORATED, OPEN
6,712.0ft, 6,723.0ft, PERFORATED, OPEN
6,738.0ft, 6,764.0ft, PERFORATED, OPEN
6,925.0ft, 6,935.0ft, PERFORATED, ISOLA
6,936.0ft, 6,976.0ft, PERFORATED, ISOLA
6,990.0ft, 7,060.0ft, PERFORATED, ISOLA
7,075.0ft, 7,094.0ft, PERFORATED, ISOLA
7,105.0ft, 7,120.0ft, PERFORATED, OPEN
7,120.0ft, 7,166.0ft, PERFORATED, OPEN
7,204.0ft, 7,225.0ft, PERFORATED, OPEN
7,225.0ft, 7,246.0ft, PERFORATED, OPEN
7,246.0ft, 7,283.0ft, PERFORATED, OPEN
7,450.0

TUBING STRING Report Date: 12/3/2003 00:00

Component	Top MD (ft)	Btm MD (ft)
TH-DBB	20.0	20.7
TBGJNT	20.7	6,618.9
ON-OFF	6,618.9	6,620.3
PKR-S	6,620.3	6,624.4
PUPJNT	6,624.4	6,640.5
TBGJNT	6,640.5	6,704.0
INJM-V	6,704.0	6,714.3
TBGJNT	6,714.3	6,809.6
PKR-S	6,809.6	6,815.1
TBGJNT	6,815.1	6,942.2
PUPJNT	6,942.2	6,960.2
INJM-D	6,960.2	6,970.5
TBGJNT	6,970.5	7,097.7
PKR-S	7,097.7	7,103.2
PUPJNT	7,103.2	7,113.2
INJM-V	7,113.2	7,123.5
PUPJNT	7,123.5	7,143.6
TBGJNT	7,143.6	7,175.3
PKR-S	7,175.3	7,180.8
PUPJNT	7,180.8	7,201.1
PNIP-O	7,201.1	7,202.6
WLREG	7,202.6	7,203.0

PLUG BACK Report Date: 2/3/2005 00:00

Component	Top MD (ft)	Btm MD (ft)
FILL	7,327.0	7,335.0

PLUG BACK Report Date: 5/14/2004 00:00

Component	Top MD (ft)	Btm MD (ft)
FILL	7,335.0	7,351.0

PLUG BACK Report Date: 10/2/2000 00:00

Component	Top MD (ft)	Btm MD (ft)
CEMENT	7,351.0	7,450.0

CONDUCTOR CASING Report Date: 9/6/2000 00:00

Item	OD (in)	Grade	Wt. (ppf)	TopMD (ft)	BtmMD (ft)
CASING JOINT(S)	14.000			20.0	60.0

SURFACE CASING Report Date: 9/15/2000 00:00

Item	OD (in)	Grade	Wt. (ppf)	TopMD (ft)	BtmMD (ft)
CASING JOINT(S)	9.625	K-55	36.00	20.0	969.0

PRODUCTION CASING Report Date: 10/2/2000 00:00

Item	OD (in)	Grade	Wt. (ppf)	TopMD (ft)	BtmMD (ft)
CASING JOINT(S)	7.000	N-80	29.00	20.0	6,778.4
FLAG JOINT	7.000	N-80	29.00	6,778.4	6,798.4
CASING JOINT(S)	7.000	N-80	29.00	6,798.4	7,352.0
FLOAT COLLAR	7.000	N-80		7,352.0	7,354.6
CASING JOINT(S)	7.000	N-80	29.00	7,354.6	7,448.4
FLOAT SHOE	7.000	N-80		7,448.4	7,450.0

Well: 377X-33S S/T/R: 33S/30S/24E

CASING CEMENT DETAIL
- - -
Sfc Csg. Cmt Vol.: 488 cf
Hole Size: 12.25"
Top Job: No
Rtns to Sfc: 11 cf
TOC: Sfc
- - -

Interm Csg. Cmt Vol.:
Hole Size:
Top Job:
Rtns to Sfc:
TOC:
- - -

Prod. Csg. Cmt Vol.: 1820 cf
Hole Size: 8.75"
Top Job: No
Rtns to Sfc: 56 cf
TOC: Sfc

Liner Cmt Vol.:
Hole Size:
Top Job:
Rtns to Sfc:
TTOC:
- - -
Top of Formation:
UBAL 6796'
BLW: 7341'

Volume Behind Pipe:
1.3 Yield Assumed
Theoretical Calculations (TTOC)

OCCIDENTAL OF ELK HILLS INC

377X-34S

Event: WELL MAINT - RIGLESS
Event End: 10/23/2009 00:00
Sec. Reason:

Water Depth: 892.0ft
Datum: ORIGINAL KB @ 914.00ft (default)
API No.: 0403028943

Wellbore: ORIGINAL HOLE
PBMD: 5,233.0ft
Btm TMD: 7,480.0ft
Spud Date: 2/2/2006 02:00
BH Coord X: 6,150,059.32uss ft
BH Coord Y: 2,287,554.63uss ft

Casing Shoes (ft) | Schematic (7/1/2009) | Openings Top/Btm/Type/Status

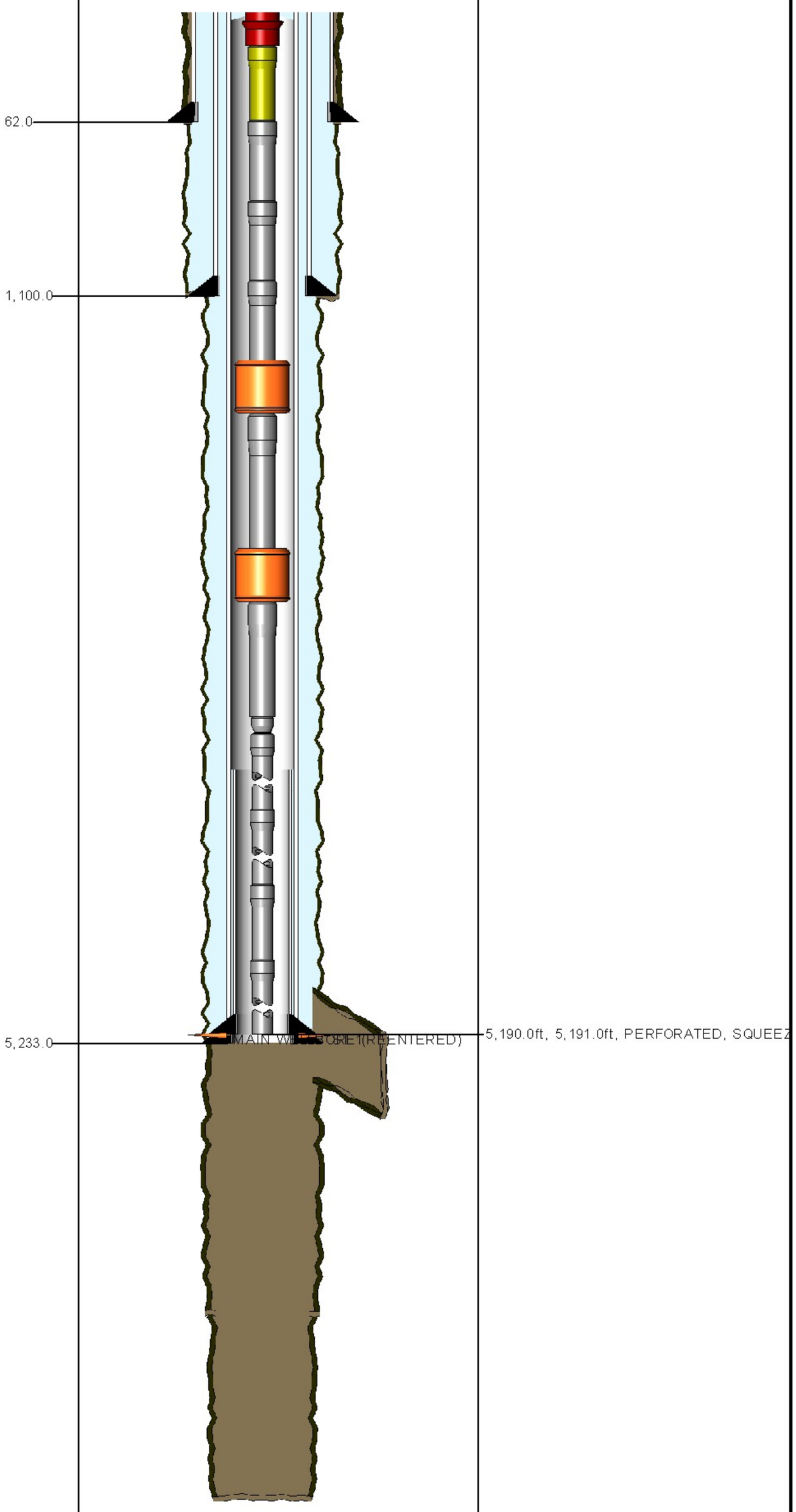

TUBING STRING Report Date: 4/30/2009 00:00

Component	Top MD (ft)	Btm MD (ft)
TH-DBB	22.0	22.6
PUPJNT	22.6	26.8
TBGJNT	26.8	2,394.8
GLM-V	2,394.8	2,403.4
CAS	2,403.4	4,394.4
GLM-V	4,394.4	4,403.3
CAS	4,403.3	4,892.4
XO	4,892.4	4,893.5
CAS	4,893.5	5,967.5
GLM-V	5,967.5	5,974.3
CAS	5,974.3	7,019.3
GLM-V	7,019.3	7,026.1
CAS	7,026.1	7,057.3
ON-OFF	7,057.3	7,058.7
PKR	7,058.7	7,059.7
PKR	7,059.7	7,062.2
PUPJNT	7,062.2	7,072.2
PRONIP	7,072.2	7,073.2
WLREG	7,073.2	7,073.6

CONDUCTOR CASING Report Date: 1/30/2006 00:00

Item	OD (in)	Grade	Wt. (ppf)	TopMD (ft)	BtmMD (ft)
CASING JOINT(S)	14.000			22.0	62.0

SURFACE CASING Report Date: 2/3/2006 00:00

Item	OD (in)	Grade	Wt. (ppf)	TopMD (ft)	BtmMD (ft)
CASING JOINT(S)	9.625	K-55	36.00	22.0	1,059.6
	9.625			1,059.6	1,059.6
CASING JOINT(S)	9.625	K-55	36.00	1,059.6	1,098.9
GUIDE SHOE	9.625			1,098.9	1,100.0

PRODUCTION CASING Report Date: 2/17/2006 00:00

Item	OD (in)	Grade	Wt. (ppf)	TopMD (ft)	BtmMD (ft)
CASING JOINT(S)	7.000	N-80	26.00	22.0	3,826.9
FLAG JOINT	7.000	N-80	26.00	3,826.9	3,839.3
CASING JOINT(S)	7.000	N-80	26.00	3,839.3	5,136.3
FLOAT COLLAR	7.000	N-80		5,136.3	5,137.9
CASING JOINT(S)	7.000	N-80	26.00	5,137.9	5,231.3
FLOAT SHOE	7.000	N-80		5,231.3	5,233.0

PRODUCTION LINER Report Date: 2/23/2006 00:00

Item	OD (in)	Grade	Wt. (ppf)	TopMD (ft)	BtmMD (ft)
TIE BACK RECEPTACLE	5.750	N-80		5,007.0	5,013.0
SETTING SLEEVE	5.750	N-80		5,013.0	5,019.4
LINER HANGER	5.934	N-80		5,019.4	5,027.3
CASING JOINT(S)	5.500	N-80	17.00	5,027.3	7,367.1
LANDING COLLAR	5.500	N-80		7,367.1	7,369.4
CASING JOINT(S)	5.500	N-80	17.00	7,369.4	7,412.2
FLOAT COLLAR	5.500	N-80		7,412.2	7,414.5
CASING JOINT(S)	5.500	N-80	17.00	7,414.5	7,459.2
FLOAT SHOE	5.500	N-80		7,459.2	7,462.0

Well: 377X-34S S/T/R: 34/30S/24E
Last Well Status: P & A
Status Date: May 10, 2006

CASING CEMENT DETAIL
- - -
Sfc Csg. Cmt Vol.: 1027 cf
Hole Size: 9.875
Top Job: no
Rtns to Sfc: 269 cf
TOC: sfc
- - -

Interm Csg. Cmt Vol.:
Hole Size:
Top Job:
Rtns to Sfc:
TOC:
- - -

Prod. Csg. Cmt Vol.: 1997 cf
Hole Size: 8.75
Top Job: no
Rtns to Sfc: 784 cf
TOC: sfc
- - -

Liner Cmt Vol.:
Hole Size:
Top Job:
Rtns to Sfc:
TOC:
- - -
Top of Formation:
UBA: 6850'
BLW: 7323'

Volume Behind Pipe:
1.3 Yield Assumed
Theoretical Calculations (TTOC)
JEP

OCCIDENTAL OF ELK HILLS INC

377X-34S

Event: WELL MAINT - RIGLESS
Event End: 10/23/2009 00:00
Sec. Reason:
End Status: FINISHED - SUCCESS
Well Classification: DEVELOPMENT

Water Depth: 892.0ft
Datum: ORIGINAL KB @ 914.00ft (default)
API No.: 0403028943

Wellbore: ST 1
PBMD: 5,233.0ft
Btm TMD: 5,647.0ft
Spud Date: 2/2/2006 02:00
BH Coord X: 6,150,002.58uss ft
BH Coord Y: 2,287,254.10uss ft

Casing Shoes (ft) | Schematic (7/1/2009) | Openings Top/Btm/Type/Status

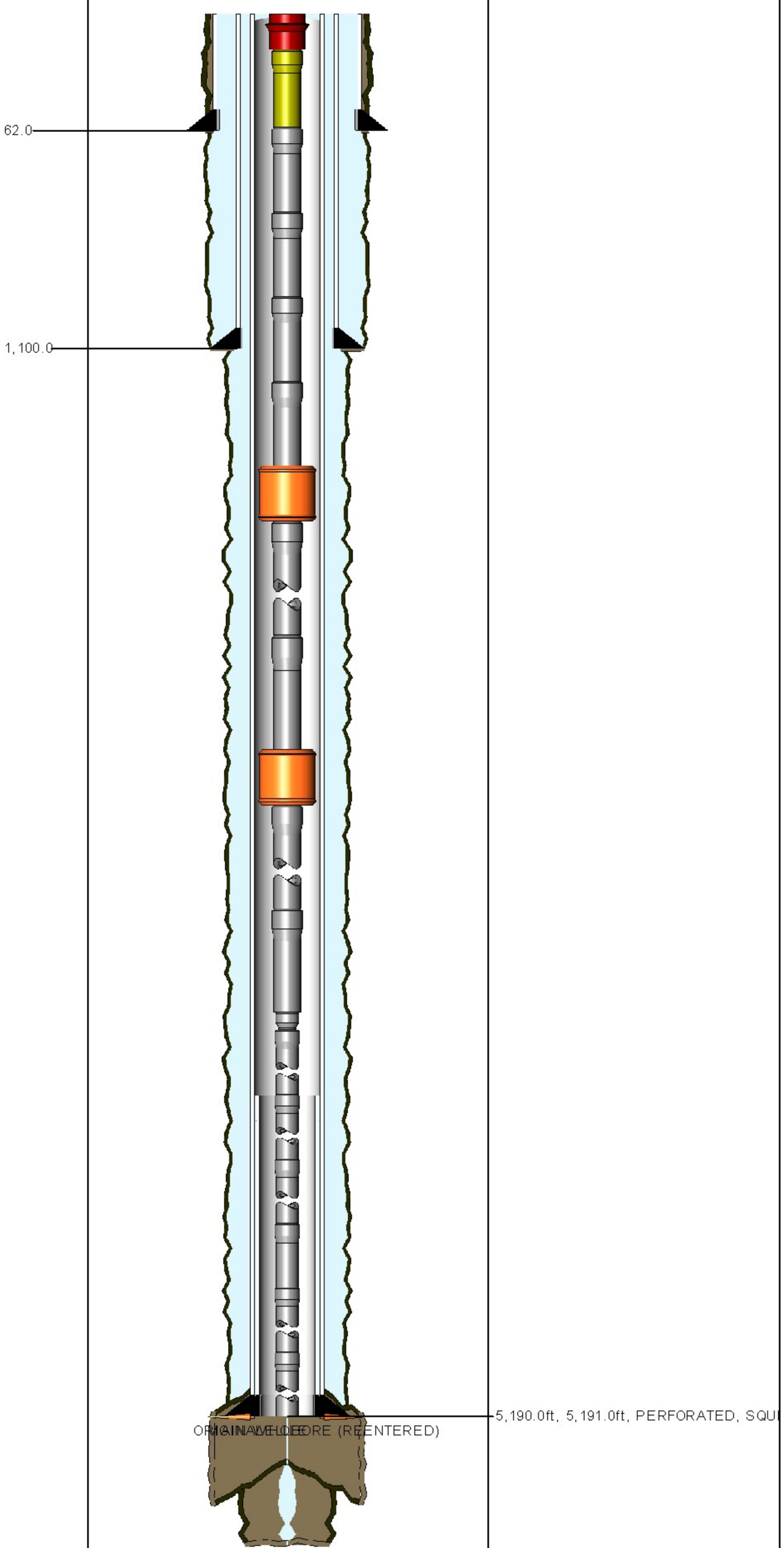

TUBING STRING Report Date: 4/30/2009 00:00

Component	Top MD (ft)	Btm MD (ft)
TH-DBB	22.0	22.6
PUPJNT	22.6	26.8
TBGJNT	26.8	2,394.8
GLM-V	2,394.8	2,403.4
CAS	2,403.4	4,394.4
GLM-V	4,394.4	4,403.3
CAS	4,403.3	4,892.4
XO	4,892.4	4,893.5
CAS	4,893.5	5,967.5
GLM-V	5,967.5	5,974.3
CAS	5,974.3	7,019.3
GLM-V	7,019.3	7,026.1
CAS	7,026.1	7,057.3
ON-OFF	7,057.3	7,058.7
PKR	7,058.7	7,059.7
PKR	7,059.7	7,062.2
PUPJNT	7,062.2	7,072.2
PRONIP	7,072.2	7,073.2
WLREG	7,073.2	7,073.6

CONDUCTOR CASING Report Date: 1/30/2006 00:00

Item	OD (in)	Grade	Wt. (ppf)	TopMD (ft)	BtmMD (ft)
CASING JOINT(S)	14.000			22.0	62.0

SURFACE CASING Report Date: 2/3/2006 00:00

Item	OD (in)	Grade	Wt. (ppf)	TopMD (ft)	BtmMD (ft)
CASING JOINT(S)	9.625	K-55	36.00	22.0	1,059.6
	9.625			1,059.6	1,059.6
CASING JOINT(S)	9.625	K-55	36.00	1,059.6	1,098.9
GUIDE SHOE	9.625			1,098.9	1,100.0

PRODUCTION CASING Report Date: 2/17/2006 00:00

Item	OD (in)	Grade	Wt. (ppf)	TopMD (ft)	BtmMD (ft)
CASING JOINT(S)	7.000	N-80	26.00	22.0	3,826.9
FLAG JOINT	7.000	N-80	26.00	3,826.9	3,839.3
CASING JOINT(S)	7.000	N-80	26.00	3,839.3	5,136.3
FLOAT COLLAR	7.000	N-80		5,136.3	5,137.9
CASING JOINT(S)	7.000	N-80	26.00	5,137.9	5,231.3
FLOAT SHOE	7.000	N-80		5,231.3	5,233.0

PRODUCTION LINER Report Date: 2/23/2006 00:00

Item	OD (in)	Grade	Wt. (ppf)	TopMD (ft)	BtmMD (ft)
TIE BACK RECEPTACLE	5.750	N-80		5,007.0	5,013.0
SETTING SLEEVE	5.750	N-80		5,013.0	5,019.4
LINER HANGER	5.934	N-80		5,019.4	5,027.3
CASING JOINT(S)	5.500	N-80	17.00	5,027.3	7,367.1
LANDING COLLAR	5.500	N-80		7,367.1	7,369.4
CASING JOINT(S)	5.500	N-80	17.00	7,369.4	7,412.2
FLOAT COLLAR	5.500	N-80		7,412.2	7,414.5
CASING JOINT(S)	5.500	N-80	17.00	7,414.5	7,459.2
FLOAT SHOE	5.500	N-80		7,459.2	7,462.0

Well: 377X-34S-RD1 S/T/R: 34S/30S/24E

CASING CEMENT DETAIL
- - -
Sfc Csg. Cmt Vol.: 1027 cf
Hole Size: 9.875"
Top Job: No
Rtns to Sfc: 269 cf
TOC: Sfc
- - -

Interm Csg. Cmt Vol.:
Hole Size:
Top Job:
Rtns to Sfc:
TOC:
- - -

Prod. Csg. Cmt Vol.: 1997 cf
Hole Size: 8.75"
Top Job: No
Rtns to Sfc: 784 cf
TOC: Sfc
- - -

Liner Cmt Vol.:
Hole Size:
Top Job:
Rtns to Sfc:
TOC:
- - -
Top of Formation:
UBA: 6850'
BLW: 7323'

Volume Behind Pipe:
1.3 Yield Assumed on
Theoretical Calculations (TTOC)

OCCIDENTAL OF ELK HILLS INC

377X-34S-RD2

Event: WELL MAINT - RIGLESS
Event End: 10/23/2009 00:00
Sec. Reason:

Water Depth: 892.0ft
Datum: ORIGINAL KB @ 914.00ft (default)
API No.: 0403028943

Wellbore: MAIN WELLBORE (REENTERED)
PBMD: 7,420.0ft
Btm TMD: 7,480.0ft
Spud Date: 2/2/2006 02:00
BH Coord X: 6,150,059.32uss ft
BH Coord Y: 2,287,554.63uss ft

Casing Shoes (ft) | Schematic (7/1/2009) | Openings Top/Btm/Type/Status

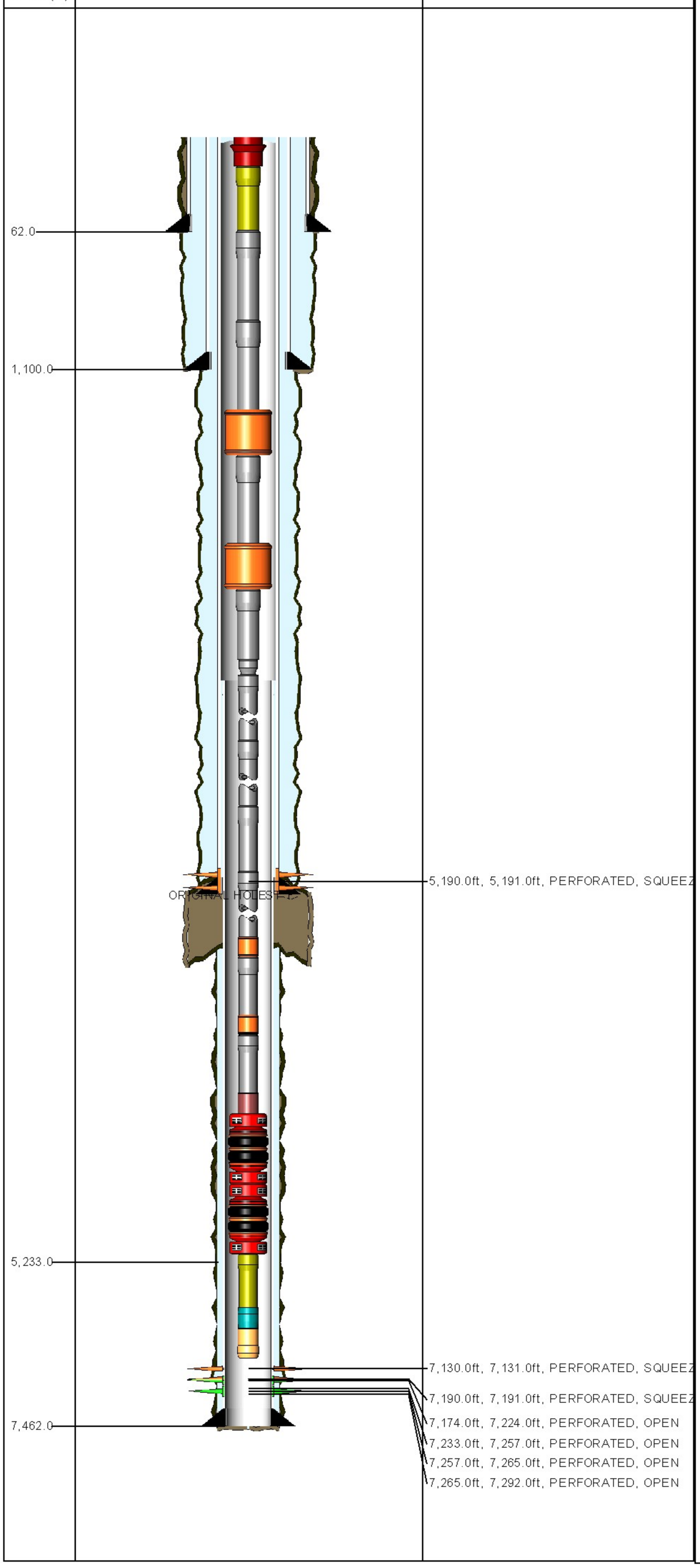

TUBING STRING Report Date: 4/30/2009 00:00

Component	Top MD (ft)	Btm MD (ft)
TH-DBB	22.0	22.6
PUPJNT	22.6	26.8
TBGJNT	26.8	2,394.8
GLM-V	2,394.8	2,403.4
CAS	2,403.4	4,394.4
GLM-V	4,394.4	4,403.3
CAS	4,403.3	4,892.4
XO	4,892.4	4,893.5
CAS	4,893.5	5,967.5
GLM-V	5,967.5	5,974.3
CAS	5,974.3	7,019.3
GLM-V	7,019.3	7,026.1
CAS	7,026.1	7,057.3
ON-OFF	7,057.3	7,058.7
PKR	7,058.7	7,059.7
PKR	7,059.7	7,062.2
PUPJNT	7,062.2	7,072.2
PRONIP	7,072.2	7,073.2
WLREG	7,073.2	7,073.6

CONDUCTOR CASING Report Date: 1/30/2006 00:00

Item	OD (in)	Grade	Wt. (ppf)	TopMD (ft)	BtmMD (ft)
CASING JOINT(S)	14.000			22.0	62.0

SURFACE CASING Report Date: 2/3/2006 00:00

Item	OD (in)	Grade	Wt. (ppf)	TopMD (ft)	BtmMD (ft)
CASING JOINT(S)	9.625	K-55	36.00	22.0	1,059.6
	9.625			1,059.6	1,059.6
CASING JOINT(S)	9.625	K-55	36.00	1,059.6	1,098.9
GUIDE SHOE	9.625			1,098.9	1,100.0

PRODUCTION CASING Report Date: 2/17/2006 00:00

Item	OD (in)	Grade	Wt. (ppf)	TopMD (ft)	BtmMD (ft)
CASING JOINT(S)	7.000	N-80	26.00	22.0	3,826.9
FLAG JOINT	7.000	N-80	26.00	3,826.9	3,839.3
CASING JOINT(S)	7.000	N-80	26.00	3,839.3	5,136.3
FLOAT COLLAR	7.000	N-80		5,136.3	5,137.9
CASING JOINT(S)	7.000	N-80	26.00	5,137.9	5,231.3
FLOAT SHOE	7.000	N-80		5,231.3	5,233.0

PRODUCTION LINER Report Date: 2/23/2006 00:00

Item	OD (in)	Grade	Wt. (ppf)	TopMD (ft)	BtmMD (ft)
TIE BACK RECEPTACLE	5.750	N-80		5,007.0	5,013.0
SETTING SLEEVE	5.750	N-80		5,013.0	5,019.4
LINER HANGER	5.934	N-80		5,019.4	5,027.3
CASING JOINT(S)	5.500	N-80	17.00	5,027.3	7,367.1
LANDING COLLAR	5.500	N-80		7,367.1	7,369.4
CASING JOINT(S)	5.500	N-80	17.00	7,369.4	7,412.2
FLOAT COLLAR	5.500	N-80		7,412.2	7,414.5
CASING JOINT(S)	5.500	N-80	17.00	7,414.5	7,459.2
FLOAT SHOE	5.500	N-80		7,459.2	7,462.0

Well: 377X-34S-RD2 S/T/R: 34/30S/24E

CASING CEMENT DETAIL
- - -
Sfc Csg. Cmt Vol.: 1027 cf
Hole Size: 9.875
Top Job: no
Rtns to Sfc: 269 cf
TOC: sfc
- - -

Interm Csg. Cmt Vol.:
Hole Size:
Top Job:
Rtns to Sfc:
TOC:
- - -

Prod. Csg. Cmt Vol.: 1997 cf
Hole Size: 8.75
Top Job: no
Rtns to Sfc: 784 cf
TOC: sfc
- - -

Liner Cmt Vol.: 596 cf
Hole Size: 6.275
Top Job: no
Rtns to Sfc: no
TTOC: 1634
- - -
Top of Formation:
UBA: 6850'
BLW: 7323'

Volume Behind Pipe:
1.3 Yield Assumed
Theoretical Calculations (TTOC)
JEP

OCCIDENTAL OF ELK HILLS INC

377XH-35S

Event: WELL MAINT - RIGLESS
Event End: 5/16/2206 00:00
Sec. Reason:
End Status: FINISHED - SUCCESS
Well Classification: DEVELOPMENT

Ground Level: 723.5ft
Datum: ORIGINAL KB @ 746.50ft (default)
API No.: 0403025617

Wellbore: ORIGINAL HOLE
PBMD: 8,538.0ft
Btm TMD: 8,562.0ft
Spud Date: 9/30/2004 00:00
BH Coord X: 6,152,859.49uss ft
BH Coord Y: 2,286,038.44uss ft

Casing Shoes (ft) | Schematic (7/1/2009) | Openings Top/Btm/Type/Status

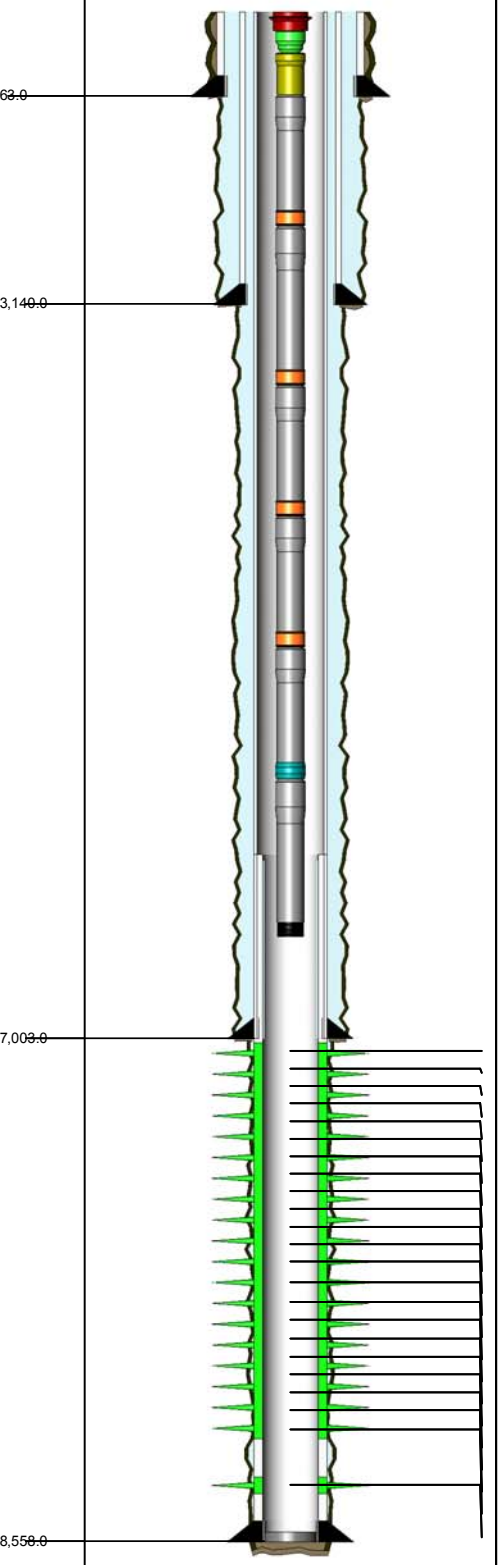

7,232.0ft, 7,259.0ft, PERFORATED, OPEN
7,295.0ft, 7,303.0ft, PERFORATED, OPEN
7,313.0ft, 7,337.0ft, PERFORATED, OPEN
7,350.0ft, 7,360.0ft, PERFORATED, OPEN
7,409.0ft, 7,434.0ft, PERFORATED, OPEN
7,465.0ft, 7,477.0ft, PERFORATED, OPEN
7,486.0ft, 7,518.0ft, PERFORATED, OPEN
7,530.0ft, 7,574.0ft, PERFORATED, OPEN
7,593.0ft, 7,598.0ft, PERFORATED, OPEN
7,623.0ft, 7,632.0ft, PERFORATED, OPEN
7,678.0ft, 7,683.0ft, PERFORATED, OPEN
7,694.0ft, 7,702.0ft, PERFORATED, OPEN
7,717.0ft, 7,740.0ft, PERFORATED, OPEN
7,898.0ft, 7,910.0ft, PERFORATED, OPEN
8,024.0ft, 8,040.0ft, PERFORATED, OPEN
8,060.0ft, 8,075.0ft, PERFORATED, OPEN
8,142.0ft, 8,172.0ft, PERFORATED, OPEN
8,215.0ft, 8,278.0ft, PERFORATED, OPEN
8,290.0ft, 8,350.0ft, PERFORATED, OPEN
8,366.0ft, 8,394.0ft, PERFORATED, OPEN
8,402.0ft, 8,436.0ft, PERFORATED, OPEN
8,446.0ft, 8,456.0ft, PERFORATED, OPEN
8,480.0ft, 8,504.0ft, PERFORATED, OPEN

TUBING STRING — Report Date: 5/5/2009 00:00

Component	Top MD (ft)	Btm MD (ft)
TH-DBB	23.0	23.6
FATNIP	23.6	24.8
PUPJNT	24.8	30.0
TBGJNT	30.0	2,301.5
GLM-V	2,301.5	2,310.3
TBGJNT	2,310.3	4,208.7
GLM-V	4,208.7	4,217.5
TBGJNT	4,217.5	5,628.9
GLM-V	5,628.9	5,637.8
TBGJNT	5,637.8	6,706.2
GLM-V	6,706.2	6,714.8
TBGJNT	6,714.8	6,746.2
PNIP-O	6,746.2	6,747.3
TBGJNT	6,747.3	6,778.8
SA	6,778.8	6,779.4

PLUG BACK — Report Date: 11/14/2004 00:00

Component	Top MD (ft)	Btm MD (ft)
CEMENT	8,538.0	8,558.0

CONDUCTOR CASING — Report Date: 9/22/2004 00:00

Item	OD (in)	Grade	Wt. (ppf)	TopMD (ft)	BtmMD (ft)
CASING JOINT(S)	14.000			23.0	63.0

SURFACE CASING — Report Date: 10/3/2004 00:00

Item	OD (in)	Grade	Wt. (ppf)	TopMD (ft)	BtmMD (ft)
CASING JOINT(S)	9.625	K-55	36.00	23.0	1,963.6
CASING JOINT(S)	9.625	K-55	36.00	1,963.6	3,139.2
GUIDE SHOE	9.625	K-55	36.00	3,139.2	3,140.0

PRODUCTION CASING — Report Date: 10/11/2004 00:00

Item	OD (in)	Grade	Wt. (ppf)	TopMD (ft)	BtmMD (ft)
CASING HANGER	7.000	SS		23.0	24.0
CASING JOINT(S)	7.000	N-80	23.00	24.0	27.2
CASING JOINT(S)	7.000	K-55	23.00	27.2	5,525.7
CASING JOINT(S)	7.000	P-110	23.00	5,525.7	5,650.6
CASING JOINT(S)	7.000	HC-P110	23.00	5,650.6	6,878.2
CASING JOINT(S)	7.000	HC-P110	23.00	6,878.2	6,915.4
FLOAT COLLAR	7.000	N-80	23.00	6,915.4	6,917.0
CASING JOINT(S)	7.000	HC-P110	23.00	6,917.0	7,001.4
FLOAT SHOE	7.000	N-80	23.00	7,001.4	7,003.0

LINER — Report Date: 10/24/2004 00:00

Item	OD (in)	Grade	Wt. (ppf)	TopMD (ft)	BtmMD (ft)
TIE BACK RECEPTACLE	7.000	N-80	23.00	6,768.0	6,774.0
	7.000	N-80	23.00	6,774.0	6,781.0
LINER HANGER	7.000	N-80	23.00	6,781.0	6,788.2
CASING JOINT(S)	5.000	N-80	15.00	6,788.2	8,456.4
LANDING COLLAR	5.000	N-80	15.00	8,456.4	8,458.7
CASING JOINT(S)	5.000	N-80	15.00	8,458.7	8,505.9
FLOAT COLLAR	5.000	N-80	15.00	8,505.9	8,508.2
CASING JOINT(S)	5.000	N-80	15.00	8,508.2	8,555.3
FLOAT SHOE	5.000	N-80	15.00	8,555.3	8,558.0

Well: 377XH-35S S/T/R: 35S/30S/24E

CASING CEMENT DETAIL
- - -
Sfc Csg. Cmt Vol.: 1280 cf
Hole Size: 12.25"
Top Job: No
Rtns to Sfc: 22 bbl
TOC: Sfc
- - -

Interm Csg. Cmt Vol.:
Hole Size:
Top Job:
Rtns to Sfc:
TOC:
- - -

Prod. Csg. Cmt Vol.: 1316 cf
Hole Size: 8.75"
Top Job: No
Rtns to Sfc: 5 bbl
TOC: Sfc
- - -

Liner Cmt Vol.: 338 cf
Hole Size: 6.25"
Top Job: No
Rtns to Sfc: No
TTOC: TOL
- - -
Top of Formation:
UBA: N/A
BLW: N/A

Volume Behind Pipe:
1.3 Yield Assumed
Theoretical Calculations (TTOC)

OCCIDENTAL OF ELK HILLS INC

378-33S

Event: WELL MAINT - RIGLESS
Event End: 6/3/2008 00:00
Sec. Reason:
End Status: FINISHED - SUCCESS
Well Classification: DEVELOPMENT

Ground Level: 982.8ft
Datum: ORIGINAL KB @ 1,002.76ft (default)
API No.: 0403000738

Wellbore: ST1
PBMD: 7,400.0ft
Btm TMD: 7,555.0ft
Spud Date: 5/11/1993 00:00
BH Coord X: 6,144,459.29uss ft
BH Coord Y: 2,287,053.17uss ft

Casing Shoes (ft)	Schematic (7/1/2008)	Openings Top/Btm/Type/Status

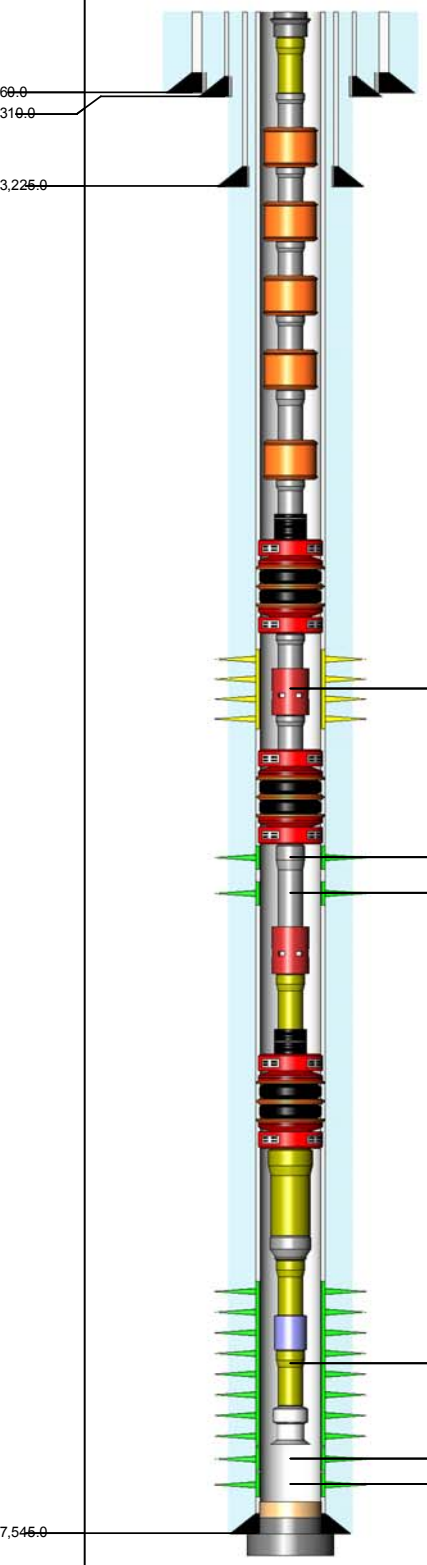

6,775.0ft, 6,840.0ft, PERFORATED, ISOLATED
6,870.0ft, 6,955.0ft, PERFORATED, OPEN
6,980.0ft, 7,020.0ft, PERFORATED, OPEN
7,050.0ft, 7,120.0ft, PERFORATED, OPEN
7,140.0ft, 7,230.0ft, PERFORATED, OPEN
7,256.0ft, 7,330.0ft, PERFORATED, OPEN

TUBING STRING — Report Date: 9/25/2001 00:00

Component	Top MD (ft)	Btm MD (ft)
TH-SGL	20.0	20.6
PUPJNT	20.6	37.5
TBGJNT	37.5	2,250.5
GLM-V	2,250.5	2,258.9
TBGJNT	2,258.9	3,952.4
GLM-V	3,952.4	3,960.8
TBGJNT	3,960.8	5,144.3
GLM-V	5,144.3	5,152.8
TBGJNT	5,152.8	6,089.8
GLM-V	6,089.8	6,098.2
TBGJNT	6,098.2	6,687.4
GLM-V	6,687.4	6,695.8
TBGJNT	6,695.8	6,727.3
SA	6,727.3	6,727.9
PKR-S	6,727.9	6,733.9
TBGJNT	6,733.9	6,824.6
SS-O	6,824.6	6,827.8
TBGJNT	6,827.8	6,858.6
PKR-S	6,858.6	6,863.0
TBGJNT	6,863.0	7,024.6
SS-O	7,024.6	7,027.8
PUPJNT	7,027.8	7,037.9
SA	7,037.9	7,038.4
PKR-S	7,038.4	7,042.8
PUPJNT	7,042.8	7,047.0
XO	7,047.0	7,047.7
PUPJNT	7,047.7	7,053.7
NOGO-O	7,053.7	7,054.9
PUPJNT	7,054.9	7,059.1
SHRSUB	7,059.1	7,059.5
BELCOL	7,059.5	7,059.9

PLUG BACK — Report Date: 5/18/2001 00:00

Component	Top MD (ft)	Btm MD (ft)
FILL	7,336.0	7,400.0

PLUG BACK — Report Date: 8/28/1993 00:00

Component	Top MD (ft)	Btm MD (ft)
CEMENT	7,400.0	7,545.0

PLUG BACK — Report Date: 7/2/1993 00:00

Component	Top MD (ft)	Btm MD (ft)
CEMENT	7,545.0	7,555.0

CONDUCTOR CASING — Report Date: 5/11/1993 00:00

Item	OD (in)	Grade	Wt. (ppf)	TopMD (ft)	BtmMD (ft)
CASING JOINT(S)	20.000			20.0	60.0

INTERMEDIATE CASING — Report Date: 6/12/1993 00:00

Item	OD (in)	Grade	Wt. (ppf)	TopMD (ft)	BtmMD (ft)
CASING JOINT(S)	9.625	K-55	40.00	20.0	3,225.0

SURFACE CASING — Report Date: 6/7/1993 00:00

Item	OD (in)	Grade	Wt. (ppf)	TopMD (ft)	BtmMD (ft)
CASING JOINT(S)	13.375	K-55	54.50	20.0	310.0

PRODUCTION CASING — Report Date: 7/2/1993 00:00

Item	OD (in)	Grade	Wt. (ppf)	TopMD (ft)	BtmMD (ft)
CASING JOINT(S)	7.000	L-80	29.00	20.0	1,343.2
CASING JOINT(S)	7.000	K-55	26.00	1,343.2	6,216.8
CASING JOINT(S)	7.000	N-80	26.00	6,216.8	6,612.1
FLAG JOINT	7.000	N-80	26.00	6,612.1	6,635.7
CASING JOINT(S)	7.000	N-80	26.00	6,635.7	7,461.4
FLOAT COLLAR	7.000	N-80	26.00	7,461.4	7,463.6
CASING JOINT(S)	7.000	N-80	26.00	7,463.6	7,542.9
GUIDE SHOE	7.000	N-80	26.00	7,542.9	7,545.0

Well: 378-33S S/T/R: 33S/30S/24E

CASING CEMENT DETAIL
- - -
Sfc Csg. Cmt Vol.: 450 cf
Hole Size: 17.5"
Top Job: no
Rtns to Sfc: 85 cf
TOC: sfc
- - -

Interm Csg. Cmt Vol.: 1650 cf
Hole Size: 12.25"
Top Job: no
Rtns to Sfc: 15 cf
TOC: sfc
- - -

Prod. Csg. Cmt Vol.: 2150 cf
Hole Size: 8.75"
Top Job: 150 cf
Rtns to Sfc: no
TTOC: 5734' per cement bond log
- - -

Liner Cmt Vol.:
Hole Size:
Top Job:
Rtns to Sfc :
TTOC:
- - -
Top of Formation:
UBA: 6766'
BLW: N/A

Volume Behind Pipe:
1.3 Yield Assumed
Theoretical Calculations (TTOC)

OCCIDENTAL OF ELK HILLS INC

378-34S

Event: WELL MAINT - RIGLESS
Event End:
Sec. Reason:

Ground Elev: 885.0ft
KB to Ground: 15.0ft
Datum: ORIGINAL KB @ 900.00ft (default)
API No.: 0402927667

Wellbore: ORIGINAL HOLE
Top TMD: 15.0ft
PBMD: 7,405.0ft
Btm TMD: 7,498.0ft
Spud Date: 5/21/1953 00:00
BH Coord X: 6,149,832.20uss ft BH Coord Y: 2,286,855.93uss

Casing Shoes (ft)

Schematic (8/4/2009)

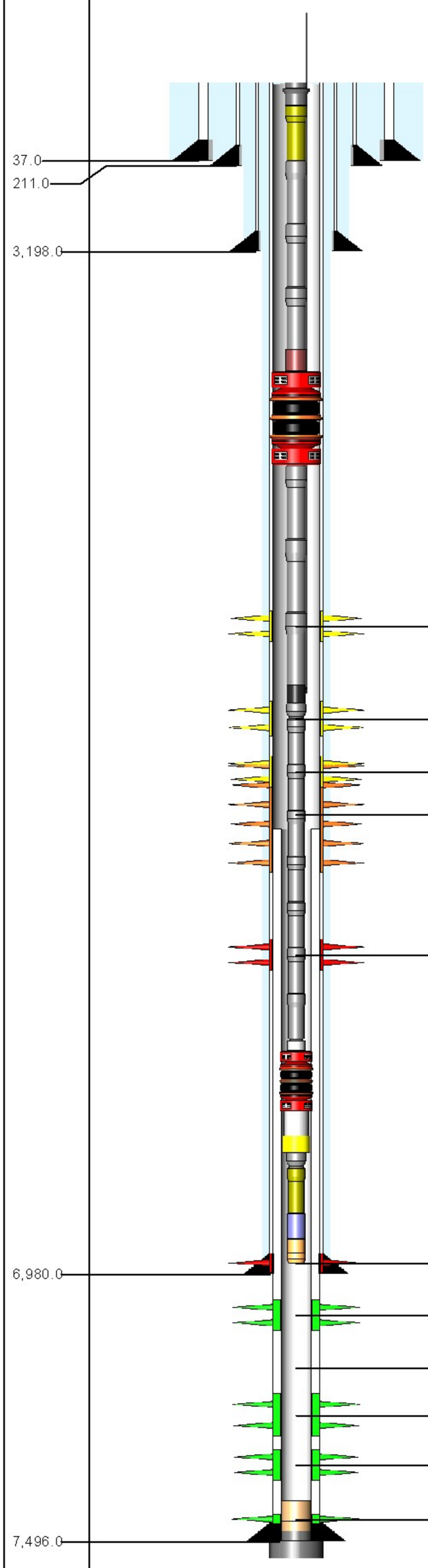

Openings Top/Btm/Type/Status

6,710.0ft, 6,730.0ft, PERFORATED, ISOLAT
6,740.0ft, 6,760.0ft, PERFORATED, ISOLAT
6,780.0ft, 6,810.0ft, PERFORATED, ISOLAT
6,780.0ft, 6,839.0ft, PERFORATED, SQUEE
6,856.0ft, 6,900.0ft, PERFORATED, ABAND
6,920.0ft, 6,974.0ft, PERFORATED, ABAND
7,126.0ft, 7,210.0ft, PERFORATED, OPEN
7,126.0ft, 7,235.0ft, PERFORATED, OPEN
7,225.0ft, 7,235.0ft, PERFORATED, OPEN
7,267.0ft, 7,309.0ft, PERFORATED, OPEN
7,345.0ft, 7,375.0ft, PERFORATED, OPEN

ROD STRING Report Date: 12/17/2001 00:00

Component	Top MD (ft)	Btm MD (ft)
POLROD	11.0	
COROD	41.0	7,307.0
INSPMP	7,307.0	

TUBING STRING Report Date: 4/17/2002 00:00

Component	Top MD (ft)	Btm MD (ft)
TH-SGL	15.0	15.6
PUPJNT	15.6	31.5
TBGJNT	31.5	6,631.5
ON-OFF	6,631.5	6,632.9
PKR-S	6,632.9	6,637.0
TBGJNT	6,637.0	6,731.8
INJM-D	6,731.8	6,740.9
XO	6,740.9	6,741.6
TBGJNT	6,741.6	6,900.7
LOCSUB	6,900.7	6,901.7
PKR-S	6,901.7	6,904.1
SBEXT	6,904.1	6,907.7
MOEXT	6,907.7	6,911.7
XO	6,911.7	6,912.3
PUPJNT	6,912.3	6,918.3
NOGO-O	6,918.3	6,919.7
WLREG	6,919.7	6,920.2

PLUG BACK Report Date: 10/27/2003 00:00

Component	Top MD (ft)	Btm MD (ft)
FILL	7,317.0	7,334.0

PLUG BACK Report Date: 9/24/2003 00:00

Component	Top MD (ft)	Btm MD (ft)
FILL	7,334.0	7,364.0

PLUG BACK Report Date: 4/10/2002 00:00

Component	Top MD (ft)	Btm MD (ft)
FILL	7,364.0	7,404.0

PLUG BACK Report Date: 9/2/1992 00:00

Component	Top MD (ft)	Btm MD (ft)
CEMENT	7,404.0	7,496.0

PLUG BACK Report Date: 9/1/1992 00:00

Component	Top MD (ft)	Btm MD (ft)
CEMENT	7,496.0	7,498.0

CONDUCTOR CASING Report Date: 5/21/1953 00:00

Item Description	Btm MD(ft)
CASING JOINT(S) 26 in, , 67.5	37.0

SURFACE CASING Report Date: 10/19/1953 00:00

Item Description	Btm MD (ft)
CASING JOINT(S) 16 in, , H-40, 65	211.0

INTERMEDIATE CASING Report Date: 10/24/1953 00:00

Item Description	Btm MD (ft)
CASING JOINT(S) 10.75 in, , J-55, 45.5	69.0
CASING JOINT(S) 10.75 in, , J-55, 40.5	2,024.0
CASING JOINT(S) 10.75 in, , J-55, 45.5	3,198.0

PRODUCTION CASING Report Date: 11/11/1953 00:00

Item Description	Btm MD (ft)
CASING JOINT(S) 7 in, , S-95, 26	56.0
CASING JOINT(S) 7 in, , N-80, 23	5,873.0
CASING JOINT(S) 7 in, , S-95, 26	6,980.0

LINER Report Date: 9/1/1992 00:00

Item Description	Btm MD (ft)
TIE BACK 6.184 in, , N-80, 11.6	6,842.0
LINER HANGER 6.184 in, , N-80, 11.6	6,851.2
CASING JOINT(S) 4.5 in, , N-80, 11.6	7,404.7
FLOAT COLLAR 4.5 in, , N-80, 11.6	7,406.6
CASING JOINT(S) 4.5 in, , N-80, 11.6	7,494.6
FLOAT SHOE 4.5 in, , N-80, 11.6	7,496.0

Well: 378-34S S/T/R: 34S/30S/24E

CASING CEMENT DETAIL
- - -
Sfc Csg. Cmt Vol.: 650 cf
Hole Size: 22"
Top Job: No
Rtns to Sfc: Yes
TOC: Sfc
- - -

Interm Csg. Cmt Vol.: 690 cf
Hole Size: 15"
Top Job: No
Rtns to Sfc: No
TTOC: 1891'
- - -

Prod. Csg. Cmt Vol.: 650 cf
Hole Size: 9.75"
Top Job: No
Rtns to Sfc: No
TTOC: 4393'
- - -

Liner Cmt Vol.: 110 cf
Hole Size: 6.125"
Top Job: No
Rtns to Sfc: No
TTOC: TOL
- - -

Top of Formation:
UBA: 6850'
BLW: 7376'

Volume Behind Pipe
1.3 Yield Assumed on
Theoretical Calculations (T)

OCCIDENTAL OF ELK HILLS INC

378X-34S

Event: WELL MAINT - RIG
Event End: 1/18/2009 00:00
Sec. Reason: COROD BODY BREAK

Ground Level: 894.3ft
Datum: ORIGINAL KB @ 914.30ft (default)
API No.: 0403015664

Wellbore: ORIGINAL HOLE
PBMD: 6,840.0ft
Btm TMD: 7,650.0ft
Spud Date: 7/13/2000 00:00
BH Coord X: 6,150,100.37uss ft
BH Coord Y: 2,287,372.31uss ft

Casing Shoes (ft)

Schematic (2/1/2009)

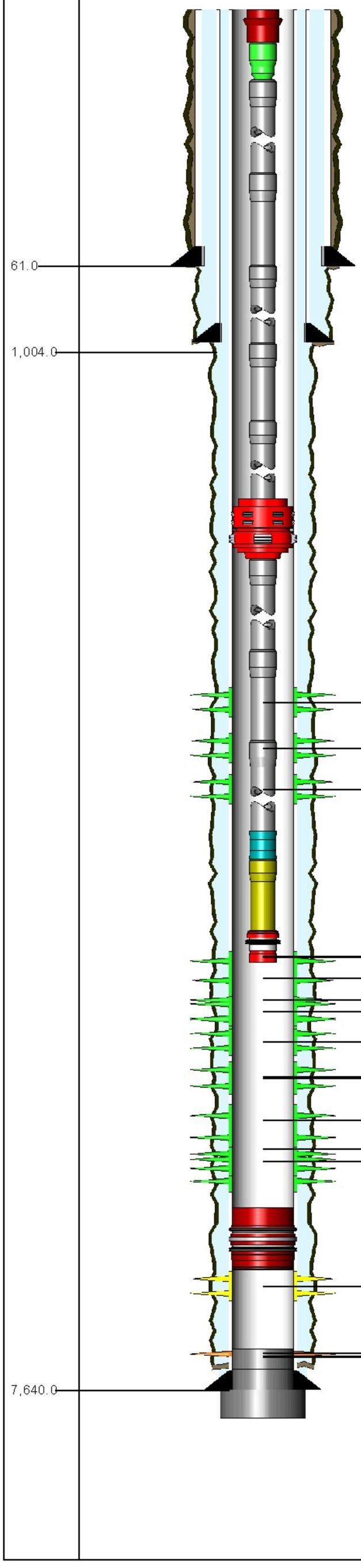

Openings Top/Btm/Type/Status

6,566.0ft, 6,591.0ft, PERFORATED, OPEN
6,615.0ft, 6,642.0ft, PERFORATED, OPEN
6,651.0ft, 6,667.0ft, PERFORATED, OPEN
6,704.0ft, 6,713.0ft, PERFORATED, OPEN
6,704.0ft, 6,715.0ft, PERFORATED, OPEN
6,716.0ft, 6,726.0ft, PERFORATED, OPEN
6,718.0ft, 6,743.0ft, PERFORATED, OPEN
6,736.0ft, 6,741.0ft, PERFORATED, OPEN
6,742.0ft, 6,752.0ft, PERFORATED, OPEN
6,762.0ft, 6,774.0ft, PERFORATED, OPEN
6,762.0ft, 6,778.0ft, PERFORATED, OPEN
6,790.0ft, 6,795.0ft, PERFORATED, OPEN
6,790.0ft, 6,821.0ft, PERFORATED, OPEN
6,804.0ft, 6,820.0ft, PERFORATED, OPEN
6,850.0ft, 6,865.0ft, PERFORATED, ISOLA
6,850.0ft, 6,865.0ft, PERFORATED, ISOLA
7,154.0ft, 7,217.0ft, REPERFORATED, SQ
7,154.0ft, 7,217.0ft, PERFORATED, SQUE
7,236.0ft, 7,250.0ft, PERFORATED, SQUE
7,236.0ft, 7,270.0ft, PERFORATED, SQUE
7,250.0ft, 7,270.0ft, PERFORATED, SQUE

ROD STRING Report Date: 1/17/2009 00:00

Component	Top MD (ft)	Btm MD (ft)
POLROD	0.0	36.0
PNYROD	36.0	48.0
ROD	48.0	2,058.0
ROD	2,058.0	4,338.0
R-6PER	4,338.0	6,618.0
RSTBAR	6,618.0	6,622.0
INSPMP	6,622.0	6,646.0

TUBING STRING Report Date: 11/24/2008 00:00

Component	Top MD (ft)	Btm MD (ft)
TH-DBB	20.0	20.7
FATNIP	20.7	21.3
CAS	21.3	35.8
CAS	35.8	6,319.5
AC	6,319.5	6,321.8
CAS	6,321.8	6,671.8
STNIP	6,671.8	6,672.9
PUPJNT	6,672.9	6,683.1
GASANC	6,683.1	6,715.7

Report Date: 3/18/2008 00:00

Component	Top MD (ft)	Btm MD (ft)
BRP	6,840.0	6,840.0

PLUG BACK Report Date: 11/12/2001 00:00

Component	Top MD (ft)	Btm MD (ft)
CEMENT	7,100.0	7,561.0

PLUG BACK Report Date: 6/20/2001 00:00

Component	Top MD (ft)	Btm MD (ft)
CEMENT	7,561.0	7,640.0

PLUG BACK Report Date: 8/4/2000 00:00

Component	Top MD (ft)	Btm MD (ft)
CEMENT	7,640.0	7,650.0

CONDUCTOR CASING Report Date: 7/10/2000 00:00

Item	OD (in)	Grade	Wt. (ppf)	TopMD (ft)	BtmMD (ft)
CASING JOINT(S)	14.000			20.0	61.0

SURFACE CASING Report Date: 7/14/2000 00:00

Item	OD (in)	Grade	Wt. (ppf)	TopMD (ft)	BtmMD (ft)
CASING JOINT(S)	9.625	K-55	36.00	20.0	1,002.0
GUIDE SHOE	9.625	K-55		1,002.0	1,003.0

PRODUCTION CASING Report Date: 8/4/2000 00:00

Item	OD (in)	Grade	Wt. (ppf)	TopMD (ft)	BtmMD (ft)
CASING JOINT(S)	7.000	N-80	26.00	20.0	6,800.2
FLAG JOINT	7.000	N-80	26.00	6,800.2	6,820.3
CASING JOINT(S)	7.000	N-80	26.00	6,820.3	7,561.3
FLOAT COLLAR	7.000	N-80	26.00	7,561.3	7,563.7
CASING JOINT(S)	7.000	N-80	26.00	7,563.7	7,637.3
FLOAT SHOE	7.000	N-80	26.00	7,637.3	7,640.0

Well: 378X-34S S/T/R: 34S/30S/24E

CASING CEMENT DETAIL
- - -
Sfc Csg. Cmt Vol.: 643 cf
Hole Size: 12.25"
Top Job: No
Rtns to Sfc: 56 cf
TOC: Sfc
- - -

Interm Csg. Cmt Vol.:
Hole Size:
Top Job:
Rtns to Sfc:
TOC:
- - -

Prod. Csg. Cmt Vol.: 1891 cf
Hole Size: 8.75"
Top Job: No
Rtns to Sfc:
TTOC: Sfc
- - -

Liner Cmt Vol.:
Hole Size:
Top Job:
Rtns to Sfc:
TTOC:
- - -
Top of Formation:
UBA: 6843'
BLW: 7339'

Volume Behind Pipe:
1.3 Yield Assumed
Theoretical Calculations (TTOC)

OCCIDENTAL OF ELK HILLS INC

381-4G

Event: WELL MAINT - RIGLESS
Event End: 6/22/2009 00:00
Sec. Reason:

Ground Level: 1,058.0ft
Datum: ORIGINAL KB @ 1,072.00ft (default)
API No.: 0402981809

Wellbore: ORIGINAL HOLE
PBMD: 7,282.0ft
Btm TMD: 7,697.0ft
Spud Date: 1/20/1988 00:00
BH Coord X: 6,144,795.69uss ft
BH Coord Y: 2,286,369.21uss ft

Casing Shoes (ft) | Schematic (7/1/2009) | Openings Top/Btm/Type/Status

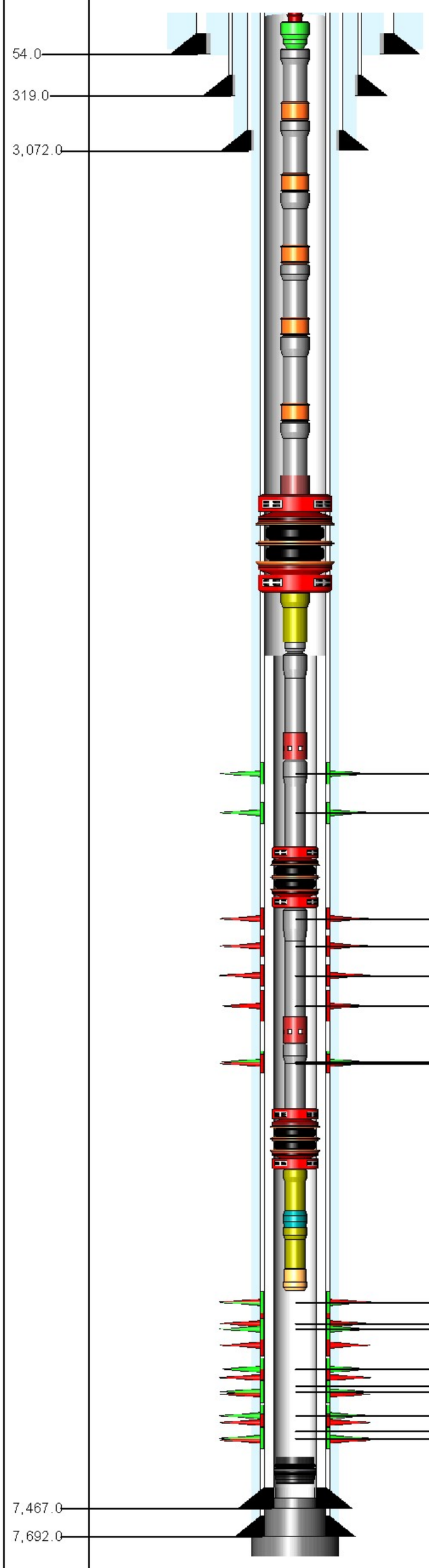

6,730.0ft, 6,751.0ft, PERFORATED, OPEN
6,805.0ft, 6,840.0ft, PERFORATED, OPEN
6,885.0ft, 6,950.0ft, PERFORATED, ABANDO
6,974.0ft, 7,038.0ft, PERFORATED, ABANDO
7,058.0ft, 7,100.0ft, PERFORATED, ABANDO
7,105.0ft, 7,135.0ft, PERFORATED, ABANDO
7,150.0ft, 7,190.0ft, PERFORATED, OPEN
7,155.0ft, 7,190.0ft, PERFORATED, ABANDO
7,234.0ft, 7,242.0ft, PERFORATED, OPEN
7,233.0ft, 7,296.0ft, PERFORATED, ABANDO
7,255.0ft, 7,295.0ft, PERFORATED, OPEN
7,315.0ft, 7,325.0ft, PERFORATED, OPEN
7,320.0ft, 7,340.0ft, PERFORATED, ABANDO
7,332.0ft, 7,340.0ft, PERFORATED, OPEN
7,355.0ft, 7,365.0ft, PERFORATED, OPEN
7,359.0ft, 7,380.0ft, PERFORATED, ABANDO
7,370.0ft, 7,380.0ft, PERFORATED, OPEN

TUBING STRING Report Date: 1/7/2004 00:00

Component	Top MD (ft)	Btm MD (ft)
TH-DBB	14.0	14.5
FATNIP	14.5	15.2
TBGJNT	15.2	2,133.7
GLM-V	2,133.7	2,142.2
TBGJNT	2,142.2	3,779.8
GLM-V	3,779.8	3,788.1
TBGJNT	3,788.1	4,987.1
GLM-V	4,987.1	4,995.9
TBGJNT	4,995.9	5,792.1
GLM-V	5,792.1	5,800.4
TBGJNT	5,800.4	6,381.4
GLM-V	6,381.4	6,390.0
TBGJNT	6,390.0	6,452.8
ON-OFF	6,452.8	6,454.3
PKR-S	6,454.3	6,458.3
PUPJNT	6,458.3	6,464.4
XO	6,464.4	6,465.5
TBGJNT	6,465.5	6,715.3
SS-O	6,715.3	6,719.1
TBGJNT	6,719.1	6,876.9
PKR-S	6,876.9	6,882.6
TBGJNT	6,882.6	7,134.3
SS-O	7,134.3	7,138.1
TBGJNT	7,138.1	7,200.5
PKR-S	7,200.5	7,206.2
PUPJNT	7,206.2	7,216.3
PNIP-O	7,216.3	7,217.3
PUPJNT	7,217.3	7,225.4
WLREG	7,225.4	7,225.8

PLUG BACK Report Date: 2/1/2001 00:00

Component	Top MD (ft)	Btm MD (ft)
BP-DR	7,409.0	7,411.0

PLUG BACK Report Date: 6/27/1998 00:00

Component	Top MD (ft)	Btm MD (ft)
CEMENT	7,425.0	7,467.0

PLUG BACK Report Date: 6/25/1998 00:00

Component	Top MD (ft)	Btm MD (ft)
CEMENT	7,467.0	7,603.0

PLUG BACK Report Date: 4/18/1998 00:00

Component	Top MD (ft)	Btm MD (ft)
CEMENT	7,603.0	7,692.0

PLUG BACK Report Date: 2/18/1998 00:00

Component	Top MD (ft)	Btm MD (ft)
CEMENT	7,692.0	7,697.0

CONDUCTOR CASING Report Date: 1/20/1988 00:00

Item	OD (in)	Grade	Wt. (ppf)	TopMD (ft)	BtmMD (ft)
CASING JOINT(S)	20.000			14.0	54.0

SURFACE CASING Report Date: 1/27/1988 00:00

Item	OD (in)	Grade	Wt. (ppf)	TopMD (ft)	BtmMD (ft)
CASING JOINT(S)	13.375	H-40	48.00	14.0	319.0

INTERMEDIATE CASING Report Date: 2/1/1988 00:00

Item	OD (in)	Grade	Wt. (ppf)	TopMD (ft)	BtmMD (ft)
CASING JOINT(S)	9.625	K-55	40.00	14.0	3,072.0

PRODUCTION CASING Report Date: 2/18/1988 00:00

Item	OD (in)	Grade	Wt. (ppf)	TopMD (ft)	BtmMD (ft)
CASING JOINT(S)	7.000	N-80	26.00	14.0	123.6
CASING JOINT(S)	7.000	N-80	23.00	123.6	5,112.0
CASING JOINT(S)	7.000	K-55	26.00	5,112.0	6,248.3
FLAG JOINT	7.000	K-55	26.00	6,248.3	6,270.3
CASING JOINT(S)	7.000	K-55	26.00	6,270.3	7,019.0
CASING JOINT(S)	7.000	N-80	26.00	7,019.0	7,602.5
FLOAT COLLAR	7.000	N-80	26.00	7,602.5	7,604.5
CASING JOINT(S)	7.000	N-80	26.00	7,604.5	7,690.0
FLOAT SHOE	7.000	N-80	26.00	7,690.0	7,692.0

INNER LINER Report Date: 6/24/1998 00:00

Item	OD (in)	Grade	Wt. (ppf)	TopMD (ft)	BtmMD (ft)
LINER HANGER	6.276	L-80	18.00	6,477.0	6,498.9
CASING JOINT(S)	5.000	L-80	18.00	6,498.9	7,466.5
GUIDE SHOE	5.000	L-80	18.00	7,466.5	7,467.0

Well: 381-4G S/T/R: 4G/30S/24E

CASING CEMENT DETAIL
- - -
Sfc Csg. Cmt Vol. (cf): 500
Hole Size (in.): 17.5
Top Job: no
Rtns to Sfc (cf): 49
TOC (ft): sfc
- - -

Interm Csg. Cmt Vol. (cf): 1450
Hole Size (in.): 12.25
Top Job: no
Rtns to Sfc (cf): 80
TOC (ft): sfc
- - -

Prod. Csg. Cmt Vol. (cf): 1900
Hole Size (in.): 8.75
Top Job: no
Rtns to Sfc (cf): 0
TTOC (ft): sfc

Liner Cmt Vol. (cf):
Hole Size (in.):
Top Job:
Rtns to Sfc (cf):
TOC (ft):
- - -
Top of Formation:
UBA: 6884'
BLW: 7460'

Volume Behind Pipe:
1.3 Yield Assumed
Theoretical Calculations (TTOC)

OCCIDENTAL OF ELK HILLS INC

381X-4G

Event: WELL MAINT - RIGLESS
Event End: 5/1/2008 00:00
Sec. Reason:

Ground Level: 1,106.5ft
Datum: ORIGINAL KB @ 1,127.50ft (default)
API No.: 0403017148

Wellbore: ORIGINAL HOLE
PBMD: 7,597.0ft
Btm TMD: 7,715.0ft
Spud Date: 12/27/2000 00:00
BH Coord X: 6,145,277.05uss ft
BH Coord Y: 2,286,166.94uss ft

Casing Shoes (ft)	Schematic (6/1/2008)	Openings Top/Btm/Type/Status

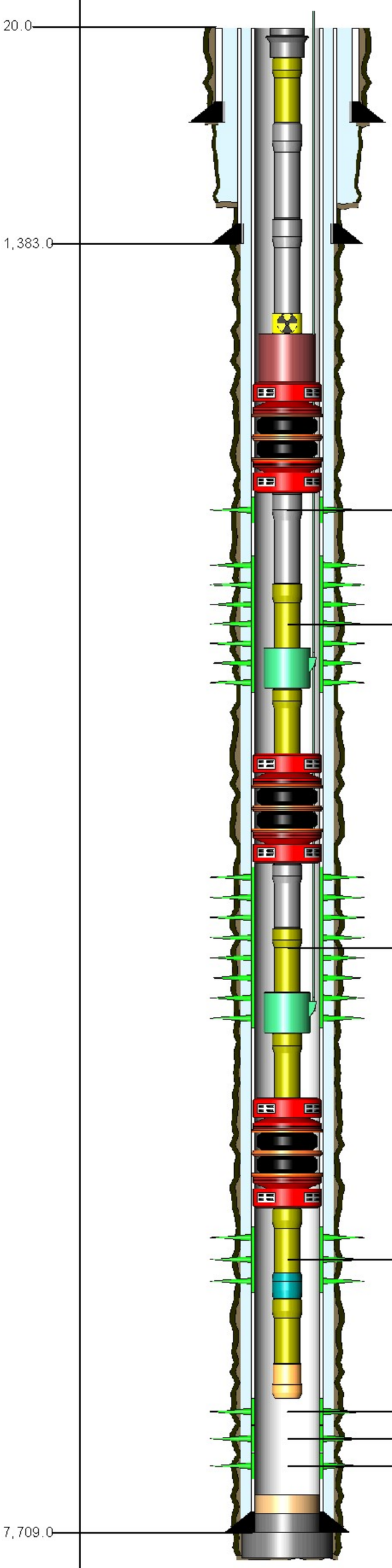

6,982.0ft, 7,022.0ft, PERFORATED, OPEN
7,032.0ft, 7,052.0ft, PERFORATED, OPEN
7,070.0ft, 7,208.0ft, PERFORATED, OPEN
7,222.0ft, 7,230.0ft, PERFORATED, OPEN
7,236.0ft, 7,248.0ft, PERFORATED, OPEN
7,256.0ft, 7,273.0ft, PERFORATED, OPEN
7,285.0ft, 7,290.0ft, PERFORATED, OPEN

TUBING STRING Report Date: 7/9/2002 00:00

Component	Top MD (ft)	Btm MD (ft)
TH-SGL	21.0	21.6
PUPJNT	21.6	42.5
TBGJNT	42.5	6,959.0
RAMKR	6,959.0	6,969.2
ON-OFF	6,969.2	6,970.9
PKR-S	6,970.9	6,977.7
TBGJNT	6,977.7	7,040.4
PUPJNT	7,040.4	7,042.6
INJM-V	7,042.6	7,051.7
PUPJNT	7,051.7	7,055.9
PKR-S	7,055.9	7,062.7
TBGJNT	7,062.7	7,185.7
PUPJNT	7,185.7	7,199.9
INJM-V	7,199.9	7,209.0
PUPJNT	7,209.0	7,215.1
PKR-S	7,215.1	7,219.1
PUPJNT	7,219.1	7,229.2
PNIP-O	7,229.2	7,230.3
PUPJNT	7,230.3	7,232.4
WLREG	7,232.4	7,232.9

PLUG BACK Report Date: 4/1/2004 00:00

Component	Top MD (ft)	Btm MD (ft)
FILL	7,553.0	7,597.0

PLUG BACK Report Date: 2/5/2001 00:00

Component	Top MD (ft)	Btm MD (ft)
CEMENT	7,597.0	7,709.0

PLUG BACK Report Date: 1/16/2001 00:00

Component	Top MD (ft)	Btm MD (ft)
CEMENT	7,709.0	7,715.0

CONDUCTOR CASING Report Date: 12/15/2000 00:00

m	OD (in)	Grade	Wt. (ppf)	TopMD (ft)	BtmMD (ft
SING JOINT(S)	14.000			21.0	61.0

SURFACE CASING Report Date: 12/30/2000 00:00

m	OD (in)	Grade	Wt. (ppf)	TopMD (ft)	BtmMD (ft
SING JOINT(S)	9.625	K-55	36.00	21.0	1,335.4
	9.625			1,335.4	1,335.4
SING JOINT(S)	9.625	K-55	36.00	1,335.4	1,381.9
IDE SHOE	9.625			1,381.9	1,383.0

PRODUCTION CASING Report Date: 1/16/2001 00:00

m	OD (in)	Grade	Wt. (ppf)	TopMD (ft)	BtmMD (ft
SING JOINT(S)	7.000	N-80	26.00	21.0	6,497.0
AG JOINT	7.000	N-80	26.00	6,497.0	6,519.6
SING JOINT(S)	7.000	N-80	26.00	6,519.6	7,614.4
DAT COLLAR	7.000	N-80	26.00	7,614.4	7,616.2
SING JOINT(S)	7.000	N-80	26.00	7,616.2	7,707.2
DAT SHOE	7.000	N-80	26.00	7,707.2	7,709.0

Well: 381X-4G S/T/R: 4G/30S/24E

CASING CEMENT DETAIL
- - -
Sfc Csg. Cmt Vol. (cf): 647
Hole Size (in.): 12.25
Top Job: no
Rtns to Sfc (cf): 101
TOC (ft): sfc
- - -

Interm Csg. Cmt Vol. (cf):
Hole Size (in.):
Top Job:
Rtns to Sfc (cf):
TOC (ft):
- - -

Prod. Csg. Cmt Vol. (cf): 1383
Hole Size (in.): 8.75
Top Job: no
Rtns to Sfc (cf): 0
TTOC (ft): sfc

Liner Cmt Vol. (cf):
Hole Size (in.):
Top Job:
Rtns to Sfc (cf):
TOC (ft):
- - -
Top of Formation:
UBA: 6980'
BLW: 7560'

Volume Behind Pipe:
1.3 Yield Assumed
Theoretical Calculations (TTOC)

OCCIDENTAL OF ELK HILLS INC

382-33S

Event: WELL MAINT - RIGLESS
Event End: 7/14/2006 00:00
Sec. Reason:

Ground Level: 824.0ft
Datum: ORIGINAL KB @ 843.00ft (HES CTU)(default)
API No.: 0402962017

Wellbore: ORIGINAL HOLE
PBMD: 7,985.0ft
Btm TMD: 8,039.0ft
Spud Date: 6/16/1982 00:00
BH Coord X: 6,145,189.40uss ft
BH Coord Y: 2,290,833.50uss ft

Casing Shoes (ft)	Schematic (8/1/2006)	Openings Top/Btm/Type/Status

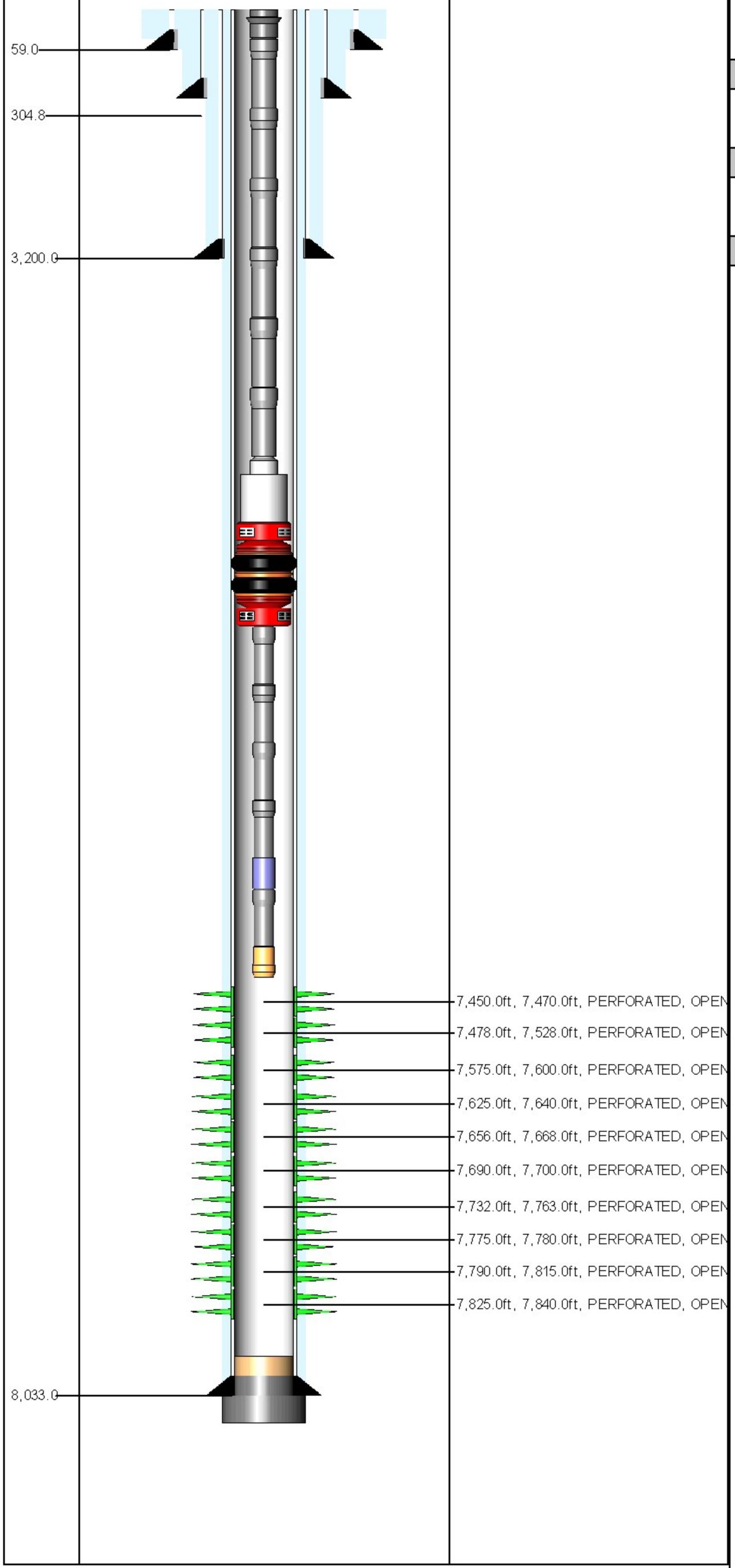

TUBING STRING Report Date: 1/6/1986 00:00

Component	Top MD (ft)	Btm MD (ft)
TH-SGL	19.0	19.6
TBGJNT	19.6	7,354.3
LOCSUB	7,354.3	7,355.3
SBEXT	7,355.3	7,360.0
PKR-S	7,360.0	7,363.6
TBGJNT	7,363.6	7,373.8
NOGO-O	7,373.8	7,374.7
TBGJNT	7,374.7	7,380.8
WLREG	7,380.8	7,381.1

PLUG BACK Report Date: 6/24/2003 00:00

Component	Top MD (ft)	Btm MD (ft)
FILL	7,962.0	7,985.0

PLUG BACK Report Date: 6/4/1983 00:00

Component	Top MD (ft)	Btm MD (ft)
CEMENT	7,985.0	8,033.0

PLUG BACK Report Date: 8/7/1982 00:00

Component	Top MD (ft)	Btm MD (ft)
CEMENT	8,033.0	8,039.0

CONDUCTOR CASING Report Date: 6/16/1982 00:00

Item	OD (in)	Grade	Wt. (ppf)	TopMD (ft)	BtmMD (ft)
CASING JOINT(S)	20.000			19.0	59.0

SURFACE CASING Report Date: 7/2/1982 00:00

Item	OD (in)	Grade	Wt. (ppf)	TopMD (ft)	BtmMD (ft)
CASING JOINT(S)	13.375	H-40	48.00	19.0	301.2
GUIDE SHOE	13.375			301.2	303.0

INTERMEDIATE CASING Report Date: 7/8/1982 00:00

Item	OD (in)	Grade	Wt. (ppf)	TopMD (ft)	BtmMD (ft)
CASING JOINT(S)	9.625	K-55	40.00	19.0	3,198.8
GUIDE SHOE	9.625			3,198.8	3,200.0

PRODUCTION CASING Report Date: 8/7/1982 00:00

Item	OD (in)	Grade	Wt. (ppf)	TopMD (ft)	BtmMD (ft)
CASING JOINT(S)	7.000	N-80	26.00	19.0	62.7
CASING JOINT(S)	7.000	K-55	23.00	62.7	5,007.6
CASING JOINT(S)	7.000	K-55	26.00	5,007.6	6,194.2
FLAG JOINT	7.000	K-55	26.00	6,194.2	6,208.4
CASING JOINT(S)	7.000	K-55	26.00	6,208.4	6,688.7
FLAG JOINT	7.000	N-80	26.00	6,688.7	6,706.7
CASING JOINT(S)	7.000	N-80	26.00	6,706.7	7,984.5
FLOAT COLLAR	7.000			7,984.5	7,986.6
CASING JOINT(S)	7.000	N-80	26.00	7,986.6	8,030.8
FLOAT SHOE	7.000			8,030.8	8,033.0

Well: 382-33S S/T/R: 33S/30S/24E

CASING CEMENT DETAIL

Sfc Csg. Cmt Vol.: 450 cf
Hole Size: 17.5"
Top Job: No
Rtns to Sfc: 100 cf
TOC: Sfc

Interm Csg. Cmt Vol.: 1984 cf
Hole Size: 12.25"
Top Job: No
Rtns to Sfc: 10 cf
TOC: Sfc

Prod. Csg. Cmt Vol.: 2180 cf
Hole Size: 8.75"
Top Job: No
Rtns to Sfc:
TTOC: Sfc

Liner Cmt Vol.:
Hole Size:
Top Job:
Rtns to Sfc:
TTOC:

Top of Formation:
UBA: 7450'
BLW: 7860'

Volume Behind Pipe:
1.3 Yield Assumed
Theoretical Calculations (TTOC)

Event: WELL MAINT - RIG
Event End: 1/29/2009 00:00
Sec. Reason: LOW PRODUCTION
End Status: FINISHED - SUCCESS
Well Classification: DEVELOPMENT

OCCIDENTAL OF ELK HILLS INC

382-35S

Ground Level: 552.2ft
Datum: ORIGINAL KB @ 575.20ft (default)
API No.: 0403026817

Wellbore: ORIGINAL HOLE
PBMD: 8,069.9ft
Btm TMD: 8,176.0ft
Spud Date: 3/3/2005 00:00
BH Coord X: 6,155,325.20uss ft
BH Coord Y: 2,289,405.59uss ft

Casing Shoes (ft) | Schematic (2/1/2009) | Openings Top/Btm/Type/Status

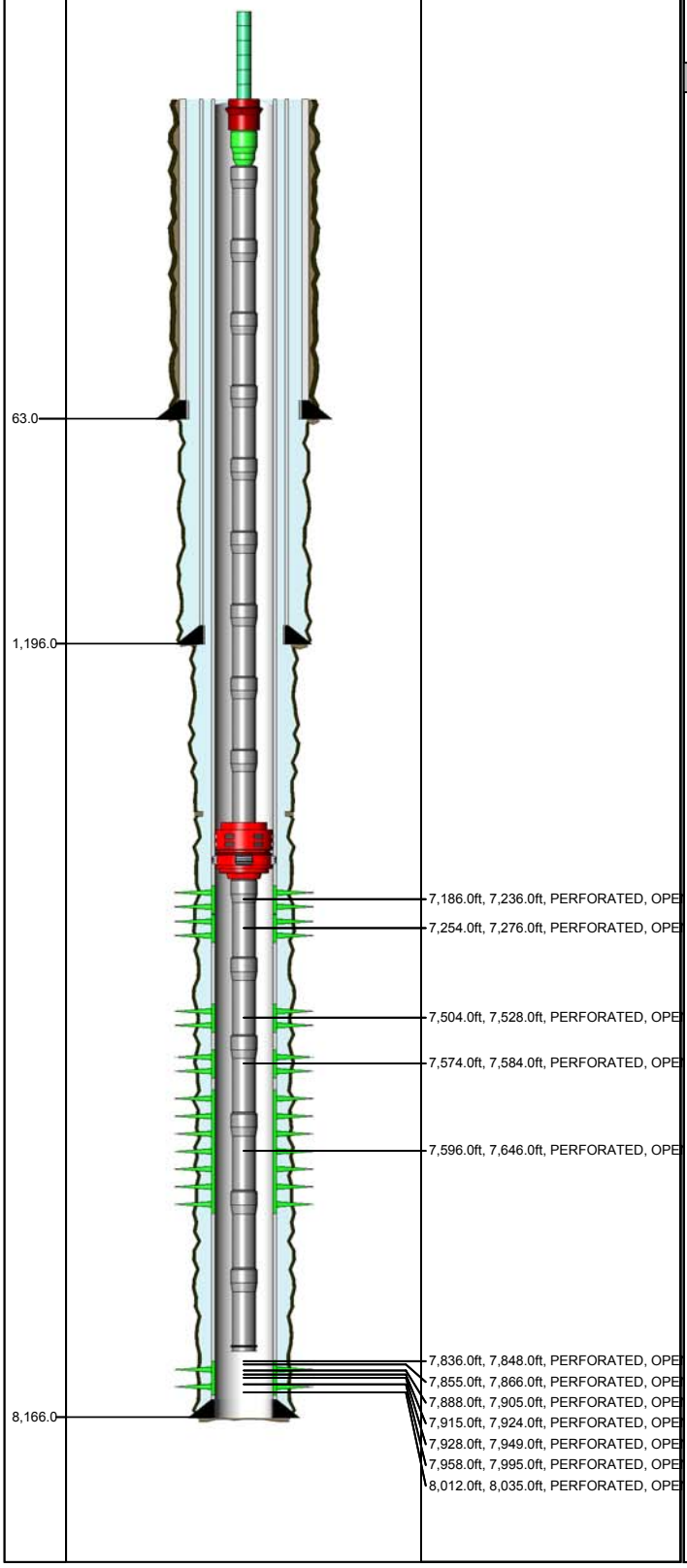

ROD STRING Report Date: 1/29/2009 00:00

Component	Top MD (ft)	Btm MD (ft)
POLRDL	0.0	36.0
ROD	36.0	66.0
COROD	66.0	1,165.0
COROD	1,165.0	2,655.0
COROD	2,655.0	7,291.0
COROD	7,291.0	7,595.0
RSTBAR	7,595.0	7,599.0
ON-OFF	7,599.0	7,600.0
RSTBAR	7,600.0	7,604.0
ROD	7,604.0	7,694.0
INSPMP	7,694.0	7,724.0

TUBING STRING Report Date: 4/5/2007 00:00

Component	Top MD (ft)	Btm MD (ft)
TH-DBB	23.0	23.8
FATNIP	23.8	24.5
TBGJNT	24.5	6,833.3
AC	6,833.3	6,835.6
TBGJNT	6,835.6	7,746.6
PMPSH	7,746.6	7,747.3
TBGJNT	7,747.3	7,778.8
STCOLL	7,778.8	7,779.2

CONDUCTOR CASING Report Date: 2/23/2005 00:00

Item	OD (in)	Grade	Wt. (ppf)	TopMD (ft)	BtmMD (ft)
CASING JOINT(S)	14.000			23.0	63.0

SURFACE CASING Report Date: 3/4/2005 00:00

Item	OD (in)	Grade	Wt. (ppf)	TopMD (ft)	BtmMD (ft)
CASING JOINT(S)	9.625	K-55	36.00	23.0	1,148.7
	9.625	K-55	36.00	1,148.7	1,148.7
CASING JOINT(S)	9.625	K-55	36.00	1,148.7	1,195.0
GUIDE SHOE	9.625	K-55	36.00	1,195.0	1,196.0

PRODUCTION CASING Report Date: 3/16/2005 00:00

Item	OD (in)	Grade	Wt. (ppf)	TopMD (ft)	BtmMD (ft)
CASING JOINT(S)	7.000	J-55	23.00	23.0	4,871.8
CASING JOINT(S)	7.000	N-80	26.00	4,871.8	8,069.9
FLOAT COLLAR	7.000	N-80	26.00	8,069.9	8,070.8
CASING JOINT(S)	7.000	N-80	26.00	8,070.8	8,164.8
FLOAT SHOE	7.000	N-80	26.00	8,164.8	8,166.0

Well: 382-35S S/T/R: 35S/30S/24E

CASING CEMENT DETAIL
- - -
Sfc Csg. Cmt Vol: 1704 cuft
Hole Size: 12.250"
Top Job: No
Rtns to Sfc: 115 cuft
TOC: Surface
- - -

Interm Csg. Cmt Vol:
Hole Size:
Top Job:
Rtns to Sfc:
TOC:
- - -

Prod. Csg. Cmt Vol: 2326 cuft
Hole Size: 8.750"
Top Job: No
Rtns to Sfc: Yes
TTOC: Surface
- - -

Liner Cmt Vol:
Hole Size:
Top Job:
Rtns to Sfc:
TTOC:
- - -
Top of Formation:
UBA: 8038'
BLW: N/A'

Volume Behind Pipe:
1.3 Yield Assumed
Theoretical Calculations (TTOC)

OCCIDENTAL OF ELK HILLS INC

382-3G

Event: WELL ENHANCEMENT
Event End: 3/15/2006 00:00
Sec. Reason:

Ground Level: 909.0ft
Datum: ORIGINAL KB @ 918.00ft (default)
API No.: 0402929025

Wellbore: ORIGINAL HOLE
PBMD: 6,642.0ft
Btm TMD: 7,740.0ft
Spud Date: 4/21/1948 00:00
BH Coord X: 6,150,462.00uss ft
BH Coord Y: 2,285,670.00uss ft

Casing Shoes (ft) | Schematic (3/15/2006) | Openings Top/Btm/Type/Status

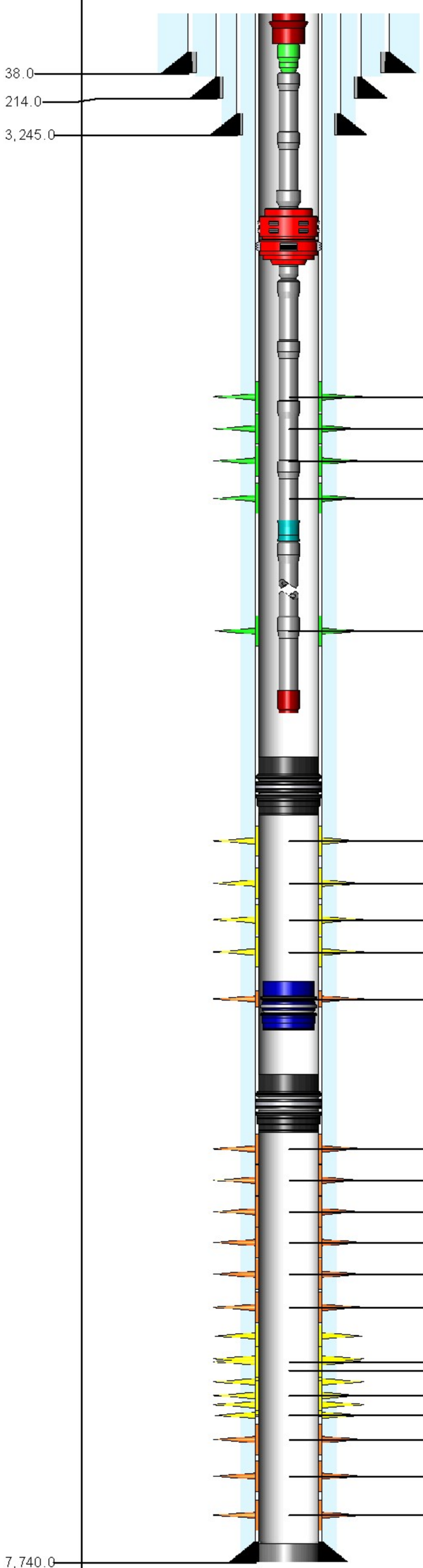

6,530.0ft, 6,540.0ft, PERFORATED, OPEN
6,544.0ft, 6,549.0ft, PERFORATED, OPEN
6,554.0ft, 6,558.0ft, PERFORATED, OPEN
6,575.0ft, 6,584.0ft, PERFORATED, OPEN
6,612.0ft, 6,618.0ft, PERFORATED, OPEN
6,703.0ft, 6,715.0ft, PERFORATED, ISOLATE
6,767.0ft, 6,772.0ft, PERFORATED, ISOLATE
6,797.0ft, 6,804.0ft, PERFORATED, ISOLATE
6,810.0ft, 6,829.0ft, PERFORATED, ISOLATE
6,870.0ft, 6,882.0ft, PERFORATED, SQUEEZ
6,977.0ft, 6,982.0ft, PERFORATED, SQUEEZ
6,996.0ft, 7,001.0ft, PERFORATED, SQUEEZ
7,016.0ft, 7,030.0ft, PERFORATED, SQUEEZ
7,035.0ft, 7,040.0ft, PERFORATED, SQUEEZ
7,059.0ft, 7,075.0ft, PERFORATED, SQUEEZ
7,117.0ft, 7,205.0ft, PERFORATED, SQUEEZ
7,360.0ft, 7,362.0ft, PERFORATED, ISOLATE
7,230.0ft, 7,410.0ft, PERFORATED, ISOLATE
7,380.0ft, 7,382.0ft, PERFORATED, ISOLATE
7,400.0ft, 7,410.0ft, PERFORATED, ISOLATE
7,480.0ft, 7,625.0ft, PERFORATED, SQUEEZ
7,645.0ft, 7,690.0ft, PERFORATED, SQUEEZ
7,700.0ft, 7,710.0ft, PERFORATED, SQUEEZ

ROD STRING Report Date: 3/14/2006 00:00

Component	Top MD (ft)	Btm MD (ft)
POLROD	0.0	30.0
PNYROD	30.0	40.0
ROD	40.0	2,710.0
ROD	2,710.0	6,610.0
INSPMP	6,610.0	6,634.0

TUBING STRING Report Date: 3/13/2006 00:00

Component	Top MD (ft)	Btm MD (ft)
TH-DBB	9.0	10.3
FATNIP	10.3	11.2
TBGJNT	11.2	6,146.8
XO	6,146.8	6,148.3
AC	6,148.3	6,151.2
XO	6,151.2	6,152.7
TBGJNT	6,152.7	6,591.2
STNIP	6,591.2	6,592.3
CAS	6,592.3	6,623.6
STCOLL	6,623.6	6,624.1

PLUG BACK Report Date: 3/9/2006 00:00

Component	Top MD (ft)	Btm MD (ft)
BP-RET	6,642.0	6,654.0

TUBING STRING Report Date: 8/19/2005 00:00

Component	Top MD (ft)	Btm MD (ft)
CR-RET	6,863.0	6,899.4

PLUG BACK Report Date: 6/23/2004 00:00

Component	Top MD (ft)	Btm MD (ft)
BP-DR	6,960.0	6,961.7

PLUG BACK Report Date: 11/30/1948 00:00

Component	Top MD (ft)	Btm MD (ft)
CEMENT	7,715.0	7,740.0

CONDUCTOR CASING Report Date: 4/21/1948 00:00

Item	OD (in)	Grade	Wt. (ppf)	TopMD (ft)	BtmMD (ft)
CASING JOINT(S)	26.000			9.0	38.0

SURFACE CASING Report Date: 9/9/1948 00:00

Item	OD (in)	Grade	Wt. (ppf)	TopMD (ft)	BtmMD (ft)
CASING JOINT(S)	18.625		142.00	9.0	214.0

INTERMEDIATE CASING Report Date: 9/24/1948 00:00

Item	OD (in)	Grade	Wt. (ppf)	TopMD (ft)	BtmMD (ft)
CASING JOINT(S)	13.375	J-55	68.00	9.0	3,245.0

PRODUCTION CASING Report Date: 11/30/1948 00:00

Item	OD (in)	Grade	Wt. (ppf)	TopMD (ft)	BtmMD (ft)
CASING JOINT(S)	8.625	N-80	40.00	9.0	76.0
CASING JOINT(S)	8.625	N-80	36.00	76.0	6,223.0
CASING JOINT(S)	8.625	N-80	40.00	6,223.0	7,740.0

Well: 382-3G S/T/R: 3G/31S/24E

CASING CEMENT DETAIL
- - -
Sfc Csg. Cmt Vol.: 400 sx
Hole Size: 24"
Top Job: No
Rtns to Sfc: Trace
TOC: Sfc
- - -

Interm Csg. Cmt Vol.: 600 sx
Hole Size: 16.5"
Top Job: No
Rtns to Sfc: No
TTOC: 1855'
- - -

Prod. Csg. Cmt Vol.: 800 sx
Hole Size: 12.25"
Top Job: No
Rtns to Sfc: No
TTOC: 5453'

Liner Cmt Vol.:
Hole Size:
Top Job:
Rtns to Sfc:
TTOC:
- - -
Top of Formation:
UBA: 7089'
BLW: 7711'

Volume Behind Pipe:
1.3 Yield Assumed
Theoretical Calculations (TTOC)

OCCIDENTAL OF ELK HILLS INC

382-4G

Event: WELL MAINT - RIG
Event End: 7/14/2009 00:00
Sec. Reason: Low Prod--Poss Plugged Intake

Ground Level: 1,072.0ft
Datum: ORIGINAL KB @ 1,081.00ft (default)
API No.: 0402929071

Wellbore: ORIGINAL HOLE
PBMD: 6,780.0ft
Btm TMD: 7,510.0ft
Spud Date: 10/28/1948 00:00
BH Coord X: 6,145,224.21uss ft
BH Coord Y: 2,285,643.93uss ft

Casing Shoes (ft)	Schematic (8/1/2009)	Openings Top/Btm/Type/Status

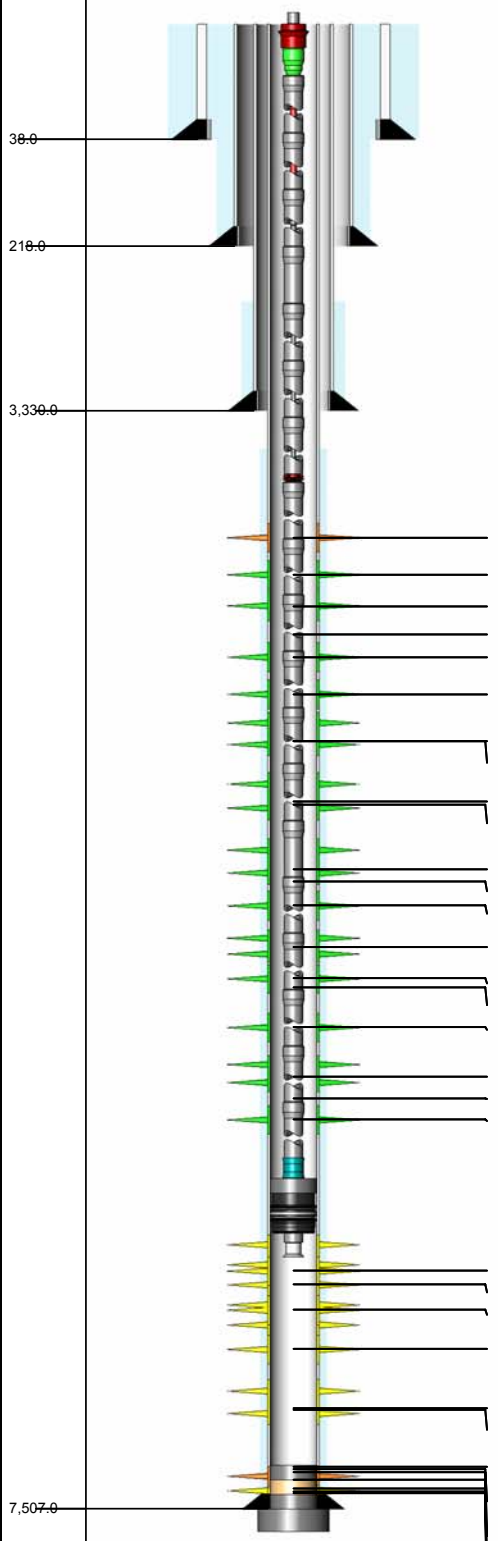

6,260.0ft, 6,261.0ft, PERFORATED, SQUEEZED
6,335.0ft, 6,365.0ft, PERFORATED, OPEN
6,382.0ft, 6,383.0ft, PERFORATED, OPEN
6,380.0ft, 6,440.0ft, PERFORATED, OPEN
6,428.0ft, 6,429.0ft, PERFORATED, OPEN
6,457.0ft, 6,477.0ft, PERFORATED, OPEN
6,500.0ft, 6,510.0ft, PERFORATED, OPEN
6,505.0ft, 6,506.0ft, PERFORATED, OPEN
6,527.0ft, 6,548.0ft, PERFORATED, OPEN
6,540.0ft, 6,541.0ft, PERFORATED, OPEN
6,630.0ft, 6,631.0ft, PERFORATED, OPEN
6,595.0ft, 6,655.0ft, PERFORATED, OPEN
6,645.0ft, 6,646.0ft, PERFORATED, OPEN
6,680.0ft, 6,681.0ft, PERFORATED, OPEN
6,685.0ft, 6,686.0ft, PERFORATED, OPEN
6,675.0ft, 6,725.0ft, PERFORATED, OPEN
6,719.0ft, 6,720.0ft, PERFORATED, OPEN
6,750.0ft, 6,751.0ft, PERFORATED, OPEN
6,745.0ft, 6,765.0ft, PERFORATED, OPEN
6,760.0ft, 6,761.0ft, PERFORATED, OPEN
6,810.0ft, 6,811.0ft, PERFORATED, ISOLATED
6,795.0ft, 6,850.0ft, PERFORATED, ISOLATED
6,830.0ft, 6,831.0ft, PERFORATED, ISOLATED
6,850.0ft, 6,851.0ft, PERFORATED, ISOLATED
6,880.0ft, 6,916.0ft, PERFORATED, ISOLATED
6,900.0ft, 6,901.0ft, PERFORATED, ISOLATED
6,952.0ft, 6,968.0ft, PERFORATED, SQUEEZED
6,981.0ft, 7,005.0ft, PERFORATED, SQUEEZED
7,020.0ft, 7,055.0ft, PERFORATED, SQUEEZED
7,067.0ft, 7,269.0ft, PERFORATED, SQUEEZED
7,309.0ft, 7,360.0ft, PERFORATED, ISOLATED
7,392.0ft, 7,403.0ft, PERFORATED, ISOLATED
7,427.0ft, 7,435.0ft, PERFORATED, ISOLATED

ROD STRING Report Date: 7/14/2009 00:00

Component	Top MD (ft)	Btm MD (ft)
POLROD	0.0	30.0
PNYROD	30.0	34.0
PNYROD	34.0	38.0
PNYROD	38.0	46.0
PNYROD	46.0	54.0
ROD	54.0	84.0
R-4PER	84.0	2,034.0
R-4PER	2,034.0	2,634.0
ROD	2,634.0	3,534.0
ROD	3,534.0	6,084.0
RSTBAR	6,084.0	6,087.0
INSPMP	6,087.0	6,112.0

TUBING STRING Report Date: 7/13/2009 00:00

Component	Top MD (ft)	Btm MD (ft)
TH-DBB	9.0	9.6
FATNIP	9.6	10.3
CAS	10.3	6,083.6
AC	6,083.6	6,085.9
CAS	6,085.9	6,777.0
STNIP	6,777.0	6,778.1
CAS	6,778.1	6,809.5
BELCOL	6,809.5	6,810.0

PLUG BACK Report Date: 3/22/2002 00:00

Component	Top MD (ft)	Btm MD (ft)
CEMENT	6,780.0	6,790.0
BP-DR	6,790.0	6,792.0

PLUG BACK Report Date: 6/30/1993 00:00

Component	Top MD (ft)	Btm MD (ft)
CEMENT	6,930.0	7,144.0
FILL	7,144.0	7,450.0

PLUG BACK Report Date: 3/16/1949 00:00

Component	Top MD (ft)	Btm MD (ft)
CEMENT	7,450.0	7,507.0

PLUG BACK Report Date: 3/13/1949 00:00

Component	Top MD (ft)	Btm MD (ft)
CEMENT	7,507.0	7,510.0

CONDUCTOR CASING Report Date: 10/28/1948 00:00

em	OD (in)	Grade	Wt. (ppf)	TopMD (ft)	BtmMD (ft)
ASING JOINT(S)	26.000			9.0	38.0

SURFACE CASING Report Date: 12/26/1948 00:00

em	OD (in)	Grade	Wt. (ppf)	TopMD (ft)	BtmMD (ft)
ASING JOINT(S)	16.000	H-40	65.00	9.0	218.0

INTERMEDIATE CASING Report Date: 1/7/1949 00:00

em	OD (in)	Grade	Wt. (ppf)	TopMD (ft)	BtmMD (ft)
ASING JOINT(S)	10.750	J-55	45.50	9.0	61.0
ASING JOINT(S)	10.750	J-55	40.50	61.0	2,176.0
ASING JOINT(S)	10.750	J-55	45.50	2,176.0	3,330.0

PRODUCTION CASING Report Date: 3/13/1949 00:00

em	OD (in)	Grade	Wt. (ppf)	TopMD (ft)	BtmMD (ft)
ASING JOINT(S)	7.000	N-80	26.00	9.0	73.0
ASING JOINT(S)	7.000	N-80	23.00	73.0	6,086.0
ASING JOINT(S)	7.000	N-80	26.00	6,086.0	7,507.0

Well: 382-4G S/T/R: 4G/31S/24E

CASING CEMENT DETAIL
- - -
Sfc Csg. Cmt Vol. : 400 sx
Hole Size (in.): 22"
Top Job: no
Rtns to Sfc : not recorded
TTOC (ft): sfc
- - -

Interm Csg. Cmt Vol.: 800 sks
Hole Size (in.): 15"
Top Job: no
Rtns to Sfc : no
TTOC (ft): 1850' per Thermometric survey
- - -

Prod. Csg. Cmt Vol.: 500 sxs
Hole Size (in.): 9.625
Top Job: no
Rtns to Sfc : no
TTOC (ft): 4800' per Thermometric survey

Liner Cmt Vol. :
Hole Size (in.):
Top Job:
Rtns to Sfc :
TOC (ft):
- - -
Top of Formation:
UBA: 6980'
BLW: N/A

Volume Behind Pipe:
1.3 Yield Assumed
Theoretical Calculations (TTOC)

Event: WELL MAINT - RIG
Event End: 10/23/2008 00:00
Sec. Reason: HOLDOWN PARTED
End Status: FINISHED - SUCCESS
Well Classification: DEVELOPMENT - CLASS III

OCCIDENTAL OF ELK HILLS INC

382X-4G

Water Depth: 1,071.7ft
Datum: ORIGINAL KB @ 1,091.70ft (default)
API No.: 0403032898

Wellbore: ORIGINAL HOLE
PBMD: 7,315.0ft
Btm TMD: 7,410.0ft
Spud Date: 4/9/2007 21:00
BH Coord X: 6,144,937.80uss ft
BH Coord Y: 2,284,738.43uss ft

Casing Shoes (ft)	Schematic (11/1/2008)	Openings Top/Btm/Type/Status

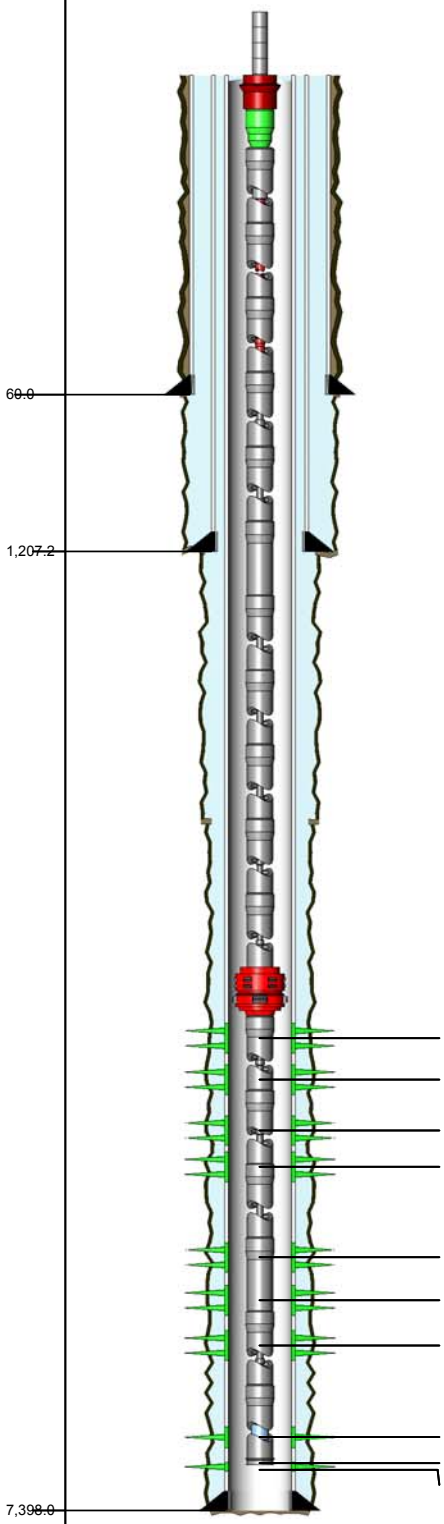

6,496.0ft, 6,580.0ft, PERFORATED, OPEN
6,605.0ft, 6,626.0ft, PERFORATED, OPEN
6,688.0ft, 6,704.0ft, PERFORATED, OPEN
6,722.0ft, 6,732.0ft, PERFORATED, OPEN
6,900.0ft, 6,944.0ft, PERFORATED, OPEN
6,972.0ft, 7,022.0ft, PERFORATED, OPEN
7,042.0ft, 7,076.0ft, PERFORATED, OPEN
7,108.0ft, 7,126.0ft, PERFORATED, OPEN
7,160.0ft, 7,170.0ft, PERFORATED, OPEN
7,192.0ft, 7,204.0ft, PERFORATED, OPEN

ROD STRING Report Date: 10/23/2008 00:00

Component	Top MD (ft)	Btm MD (ft)
POLROD	0.0	36.0
PNYROD	36.0	50.0
ROD	50.0	2,570.0
R-4PER	2,570.0	4,490.0
R-4PER	4,490.0	6,590.0
R-4PER	6,590.0	7,100.0
RSTBAR	7,100.0	7,104.0
INSPMP	7,104.0	7,134.0

TUBING STRING Report Date: 10/22/2008 00:00

Component	Top MD (ft)	Btm MD (ft)
TH-DBB	20.0	20.6
FATNIP	20.6	21.3
CAS	21.3	6,378.0
AC	6,378.0	6,380.4
CAS	6,380.4	7,138.8
PMPSH	7,138.8	7,139.4
CAS	7,139.4	7,171.1
STCOLL	7,171.1	7,171.5

CONDUCTOR CASING Report Date: 4/5/2007 00:00

Item	OD (in)	Grade	Wt. (ppf)	TopMD (ft)	BtmMD (ft)
CASING JOINT(S)	14.000			20.0	60.0

SURFACE CASING Report Date: 4/10/2007 00:00

Item	OD (in)	Grade	Wt. (ppf)	TopMD (ft)	BtmMD (ft)
CASING JOINT(S)	9.625	K-55	36.00	20.0	1,170.0
FLOAT COLLAR	9.625		0.00	1,170.0	1,170.1
CASING JOINT(S)	9.625	K-55	36.00	1,170.1	1,206.1
GUIDE SHOE	9.625		0.00	1,206.1	1,207.2

PRODUCTION CASING Report Date: 4/21/2007 00:00

Item	OD (in)	Grade	Wt. (ppf)	TopMD (ft)	BtmMD (ft)
CASING JOINT(S)	7.000	K-55	23.00	20.0	3,773.2
CASING JOINT(S)	7.000		26.00	3,773.2	6,296.7
FLAG JOINT	7.000		26.00	6,296.7	6,316.5
CASING JOINT(S)	7.000		26.00	6,316.5	7,313.9
FLOAT COLLAR	7.000		26.00	7,313.9	7,315.5
CASING JOINT(S)	7.000		26.00	7,315.5	7,396.2
FLOAT SHOE	7.000		26.00	7,396.2	7,398.0

Well: 382X-4G S/T/R: 4G/31S/24E

CASING CEMENT DETAIL
- - -
Sfc Csg. Cmt Vol.: 894 cf
Hole Size: 12.25" (9-5/8" Casing)
Top Job: NO
Rtns to Sfc: YES
TOC: NA
- - -

Interm Csg. Cmt Vol.: None
Hole Size:
Top Job:
Rtns to Sfc:
TOC:
- - -

Prod. Csg. Cmt Vol.: 1854 cf
Hole Size: 8.75" (7" Casing)
Top Job: NO
Rtns to Sfc: YES
TTOC: NA
- - -

Liner Cmt Vol.: None
Hole Size:
Top Job:
Rtns to Sfc:
TTOC:
- - -
Top of Formation:
UBA: 7368'
BLW: NA

Volume Behind Pipe:
1.3 Yield Assumed
Theoretical Calculations (TTOC)

Event: WELL MAINT - RIG
Event End: 1/18/2008 00:00
Sec. Reason:
End Status: FINISHED - SUCCESS
Well Classification: DEVELOPMENT

OCCIDENTAL OF ELK HILLS INC

383-34S

Ground Level: 743.1ft
Datum: ORIGINAL KB @ 765.10ft (default)
API No.: 0403025418

Wellbore: ORIGINAL HOLE
PBMD: 7,523.0ft
Btm TMD: 7,674.0ft
Spud Date: 10/7/2004 00:00
BH Coord X: 6,150,361.28uss ft
BH Coord Y: 2,290,032.55uss ft

Casing Shoes (ft)	Schematic (2/1/2008)	Openings Top/Btm/Type/Status

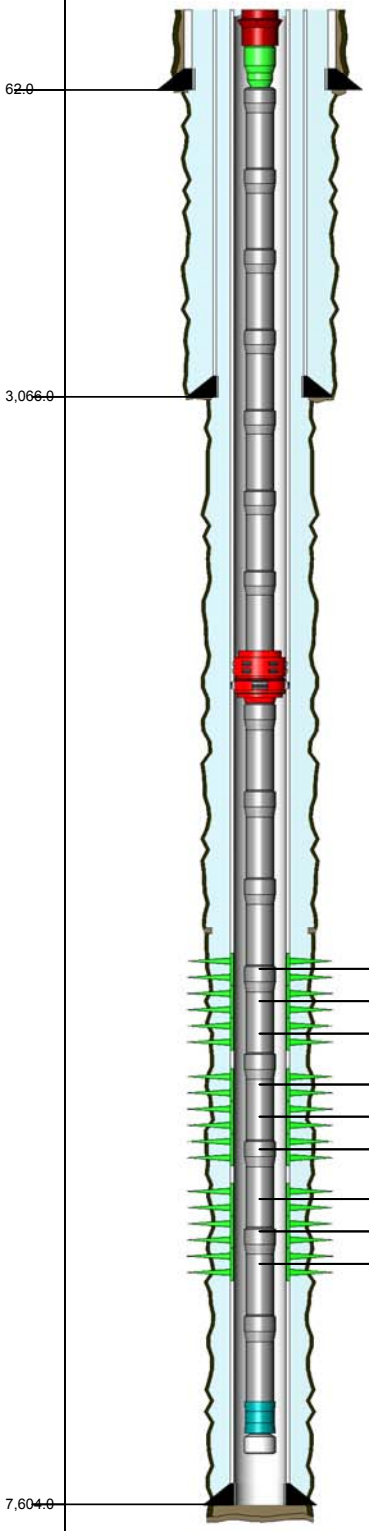

7,208.0ft, 7,212.0ft, PERFORATED, OPEN
7,212.0ft, 7,217.0ft, PERFORATED, OPEN
7,217.0ft, 7,225.0ft, PERFORATED, OPEN
7,240.0ft, 7,270.0ft, PERFORATED, OPEN
7,270.0ft, 7,275.0ft, PERFORATED, OPEN
7,275.0ft, 7,290.0ft, PERFORATED, OPEN
7,298.0ft, 7,312.0ft, PERFORATED, OPEN
7,312.0ft, 7,317.0ft, PERFORATED, OPEN
7,317.0ft, 7,350.0ft, PERFORATED, OPEN

ROD STRING — Report Date: 1/16/2008 00:00

Component	Top MD (ft)	Btm MD (ft)
POLROD	0.0	36.0
PNYROD	36.0	62.0
ROD	62.0	2,672.0
R-6PER	2,672.0	4,142.0
ROD	4,142.0	7,322.0
RSTBAR	7,322.0	7,326.0
INSPMP	7,326.0	7,350.0

TUBING STRING — Report Date: 1/16/2008 00:00

Component	Top MD (ft)	Btm MD (ft)
TH-DBB	22.0	22.7
FATNIP	22.7	23.3
TBGJNT	23.3	6,972.9
AC	6,972.9	6,975.7
TBGJNT	6,975.7	7,353.8
STNIP	7,353.8	7,354.9
PMPJKT	7,354.9	7,361.1

CONDUCTOR CASING — Report Date: 9/20/2004 00:00

Item	OD (in)	Grade	Wt. (ppf)	TopMD (ft)	BtmMD (ft)
CASING JOINT(S)	14.000			22.0	62.0

SURFACE CASING — Report Date: 10/11/2004 00:00

Item	OD (in)	Grade	Wt. (ppf)	TopMD (ft)	BtmMD (ft)
CASING JOINT(S)	8.625	K-55	24.00	22.0	2,352.8
CASING JOINT(S)	8.625	K-55	32.00	2,352.8	3,020.0
	8.625			3,020.0	3,020.0
CASING JOINT(S)	8.625	K-55	32.00	3,020.0	3,064.9
GUIDE SHOE	8.625			3,064.9	3,066.0

PRODUCTION CASING — Report Date: 10/21/2004 00:00

Item	OD (in)	Grade	Wt. (ppf)	TopMD (ft)	BtmMD (ft)
CASING JOINT(S)	5.500	L-80	20.00	22.0	6,743.3
FLAG JOINT	5.500	L-80	20.00	6,743.3	6,761.4
CASING JOINT(S)	5.500	L-80	20.00	6,761.4	7,404.6
CASING JOINT(S)	5.500	P-110	20.00	7,404.6	7,522.7
FLOAT COLLAR	5.500	P-110		7,522.7	7,523.7
CASING JOINT(S)	5.500	P-110	20.00	7,523.7	7,602.7
FLOAT SHOE	5.500	P-110		7,602.7	7,604.0

Well: 383-34S S/T/R: 34S/30S/24E

CASING CEMENT DETAIL
- - -
Sfc Csg. Cmt Vol.: 1944 cf
Hole Size: 12-1/4" (8-5/8" Casing)
Top Job: NO
Rtns to Sfc: YES
TTOC: NA
- - -

Interm Csg. Cmt Vol.: NONE
Hole Size:
Top Job:
Rtns to Sfc:
TTOC:'
- - -

Prod. Csg. Cmt Vol.: 1589 cf
Hole Size: 7-7/8" (5-1/2" Casing)
Top Job: NO
Rtns to Sfc: ?
TTOC: Surface
- - -

Liner Cmt Vol.: NONE
Hole Size:
Top Job:
Rtns to Sfc:
TTOC:
- - -
Top of Formation:
UBA: 7206'
BLW: 7662'

Volume Behind Pipe:
1.3 Yield Assumed
Theoretical Calculations (TTOC)

OCCIDENTAL OF ELK HILLS INC

384-33S

Event: WELL MAINT - RIG
Event End: 11/4/2008 00:00
Sec. Reason: SANDED
End Status: FINISHED - SUCCESS
Well Classification: DEVELOPMENT

Ground Level: 887.0ft
Datum: ORIGINAL KB @ 901.00ft (default)
API No.: 0402960258

Wellbore: ST1
PBMD: 7,566.0ft
Btm TMD: 7,650.0ft
Spud Date: 11/28/1979 00:00
BH Coord X: 6,145,180.41uss ft
BH Coord Y: 2,289,630.19uss ft

Casing Shoes (ft)	Schematic (11/4/2008)	Openings Top/Btm/Type/Status

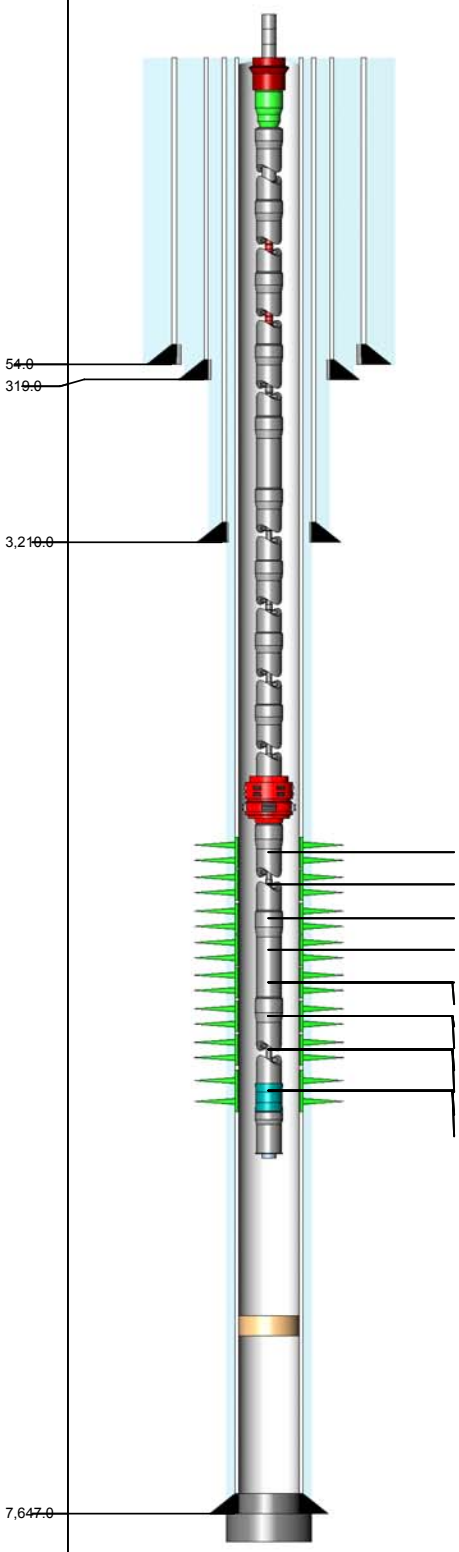

6,926.0ft, 6,936.0ft, PERFORATED, OPEN
6,957.0ft, 7,010.0ft, PERFORATED, OPEN
7,048.0ft, 7,068.0ft, PERFORATED, OPEN
7,077.0ft, 7,106.0ft, PERFORATED, OPEN
7,126.0ft, 7,177.0ft, PERFORATED, OPEN
7,126.0ft, 7,177.0ft, PERFORATED, OPEN
7,200.0ft, 7,250.0ft, PERFORATED, OPEN
7,200.0ft, 7,250.0ft, PERFORATED, OPEN
7,265.0ft, 7,295.0ft, PERFORATED, OPEN
7,265.0ft, 7,295.0ft, PERFORATED, OPEN
7,312.0ft, 7,365.0ft, PERFORATED, OPEN
7,312.0ft, 7,365.0ft, PERFORATED, OPEN

ROD STRING — Report Date: 11/1/2008 00:00

Component	Top MD (ft)	Btm MD (ft)
POLROD	0.0	36.0
PNYROD	36.0	46.0
ROD	46.0	2,896.0
ROD	2,896.0	5,506.0
R-4PER	5,506.0	7,366.0
RSTBAR	7,366.0	7,370.0
INSPMP	7,370.0	7,394.0

TUBING STRING — Report Date: 10/31/2008 00:00

Component	Top MD (ft)	Btm MD (ft)
TH-DBB	14.0	14.6
FATNIP	14.6	15.3
CAS	15.3	6,733.6
AC	6,733.6	6,735.9
CAS	6,735.9	7,358.0
STNIP	7,358.0	7,359.1
CAS	7,359.1	7,390.2
STCOLL	7,390.2	7,390.6

PLUG BACK — Report Date: 10/14/2003 00:00

Component	Top MD (ft)	Btm MD (ft)
FILL	7,500.0	7,566.0

PLUG BACK — Report Date: 2/29/1980 00:00

Component	Top MD (ft)	Btm MD (ft)
CEMENT	7,605.0	7,647.0

PLUG BACK — Report Date: 12/30/1979 00:00

Component	Top MD (ft)	Btm MD (ft)
CEMENT	7,647.0	7,650.0

CONDUCTOR CASING — Report Date: 11/28/1979 00:00

Item	OD (in)	Grade	Wt. (ppf)	TopMD (ft)	BtmMD (ft)
CASING JOINT(S)	20.000		94.00	14.0	54.0

SURFACE CASING — Report Date: 12/2/1979 00:00

Item	OD (in)	Grade	Wt. (ppf)	TopMD (ft)	BtmMD (ft)
CASING JOINT(S)	13.375	K-55	54.00	14.0	319.0

INTERMEDIATE CASING — Report Date: 12/7/1979 00:00

Item	OD (in)	Grade	Wt. (ppf)	TopMD (ft)	BtmMD (ft)
CASING JOINT(S)	9.625	K-55	40.00	14.0	3,210.0

PRODUCTION CASING — Report Date: 12/30/1979 00:00

Item	OD (in)	Grade	Wt. (ppf)	TopMD (ft)	BtmMD (ft)
CASING JOINT(S)	7.000	N-80	26.00	14.0	76.0
CASING JOINT(S)	7.000	N-80	23.00	76.0	6,508.0
FLAG JOINT	7.000	N-80	26.00	6,508.0	6,527.6
CASING JOINT(S)	7.000	N-80	23.00	6,527.6	6,609.0
CASING JOINT(S)	7.000	N-80	26.00	6,609.0	7,647.0

Well: 384-33S S/T/R: 33S/30S/24E

CASING CEMENT DETAIL
- - -
Sfc Csg. Cmt Vol.: 435 cf
Hole Size: 17.5"
Top Job: no
Rtns to Sfc: 80 cf
TOC: sfc
- - -

Interm Csg. Cmt Vol.: 1630 cf
Hole Size: 12.25"
Top Job: no
Rtns to Sfc: 78 cf
TOC: sfc
- - -

Prod. Csg. Cmt Vol.: 2470 cf
Hole Size: 8.75"
Top Job: no
Rtns to Sfc: trace
TOC: sfc
- - -

Liner Cmt Vol.:
Hole Size:
Top Job:
Rtns to Sfc :
TTOC:
- - -
Top of Formation:
UBA: 7125'
BLW: 7520'

Volume Behind Pipe:
1.3 Yield Assumed
Theoretical Calculations (TTOC)

Event: WELL ENHANCEMENT
Event End:
Sec. Reason:
End Status:
Well Classification: DEVELOPMENT

OCCIDENTAL OF ELK HILLS INC

384-34S

Ground Level: 721.0ft
Datum: ORIGINAL KB @ 731.00ft (default)
API No.: 0402927668

Wellbore: ORIGINAL HOLE
PBMD: 7,235.0ft
Btm TMD: 7,307.0ft
Spud Date: 6/21/1950 00:00
BH Coord X: 6,150,294.20uss ft
BH Coord Y: 2,289,587.92uss ft

Casing Shoes (ft)	Schematic (2/1/2007)	Openings Top/Btm/Type/Status

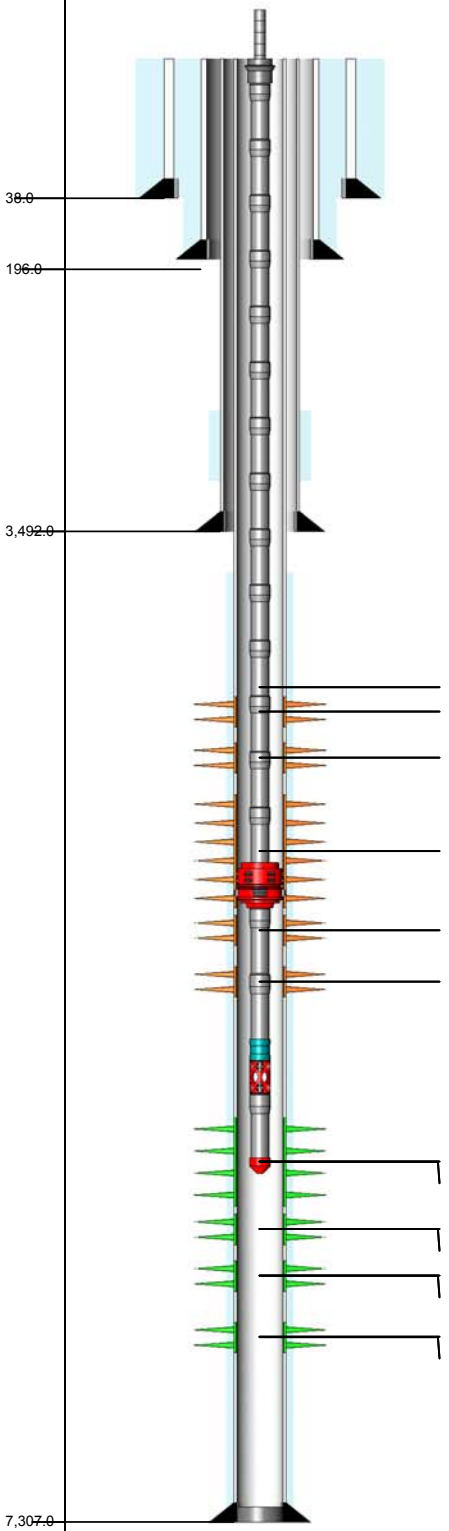

6,300.0ft, 6,301.0ft, WSO PERFS, SQUEEZE
6,415.0ft, 6,525.0ft, PERFORATED, SQUEEZ
6,550.0ft, 6,590.0ft, PERFORATED, SQUEEZ
6,615.0ft, 6,695.0ft, PERFORATED, SQUEEZ
6,715.0ft, 6,805.0ft, PERFORATED, SQUEEZ
6,830.0ft, 6,875.0ft, PERFORATED, SQUEEZ
6,900.0ft, 6,985.0ft, PERFORATED, OPEN
6,900.1ft, 6,985.1ft, PERFORATED, OPEN
6,995.0ft, 7,050.0ft, PERFORATED, OPEN
6,995.1ft, 7,050.1ft, PERFORATED, OPEN
7,065.0ft, 7,145.0ft, PERFORATED, OPEN
7,065.1ft, 7,145.1ft, PERFORATED, OPEN
7,160.0ft, 7,200.0ft, PERFORATED, OPEN
7,160.1ft, 7,200.1ft, PERFORATED, OPEN

ROD STRING Report Date: 1/14/2007 00:00

Component	Top MD (ft)	Btm MD (ft)
POLROD	0.0	30.0
PNYROD	30.0	38.0
ROD	38.0	3,128.0
ROD	3,128.0	6,406.0
R-4PER	6,406.0	6,886.0
RSTBAR	6,886.0	6,890.0
INSPMP	6,890.0	6,914.0

TUBING STRING Report Date: 8/16/2006 00:00

Component	Top MD (ft)	Btm MD (ft)
TH-SGL	10.0	10.6
TBGJNT	10.6	6,692.6
AC	6,692.6	6,695.0
TBGJNT	6,695.0	6,880.1
STNIP	6,880.1	6,881.2
PERFJT	6,881.2	6,885.3
TBGJNT	6,885.3	6,946.1
BULPLG	6,946.1	6,946.7

PLUG BACK Report Date: 9/30/1950 00:00

Component	Top MD (ft)	Btm MD (ft)
CEMENT	7,235.0	7,307.0

CONDUCTOR CASING Report Date: 6/21/1950 00:00

Item	OD (in)	Grade	Wt. (ppf)	TopMD (ft)	BtmMD (ft)
CASING JOINT(S)	26.000			10.0	38.0

SURFACE CASING Report Date: 7/23/1950 00:00

Item	OD (in)	Grade	Wt. (ppf)	TopMD (ft)	BtmMD (ft)
CASING JOINT(S)	16.000	H-40		10.0	194.0
GUIDE SHOE	16.000	H-40		194.0	195.0

INTERMEDIATE CASING Report Date: 7/31/1950 00:00

Item	OD (in)	Grade	Wt. (ppf)	TopMD (ft)	BtmMD (ft)
CASING JOINT(S)	10.750	J-55	45.50	10.0	43.0
CASING JOINT(S)	10.750	J-55	40.50	43.0	2,008.0
CASING JOINT(S)	10.750	J-55	45.50	2,008.0	3,491.0
GUIDE SHOE	10.750		45.50	3,491.0	3,492.0

PRODUCTION CASING Report Date: 9/28/1950 00:00

Item	OD (in)	Grade	Wt. (ppf)	TopMD (ft)	BtmMD (ft)
CASING JOINT(S)	7.000	N-80	26.00	10.0	72.0
CASING JOINT(S)	7.000	N-80	23.00	72.0	5,847.0
CASING JOINT(S)	7.000	N-80	26.00	5,847.0	7,306.0
FLOAT COLLAR	7.000	N-80	26.00	7,306.0	7,307.0

Well: 384-34S S/T/R: 34S/30S/24E

CASING CEMENT DETAIL
- - -
Sfc Csg. Cmt Vol.: 450 sks
Hole Size: (16" Casing)
Top Job: NO
Rtns to Sfc: YES
TTOC: NA
- - -

Interm Csg. Cmt Vol.: 750 sks
Hole Size: 15" (10-3/4" Casing)
Top Job: NO
Rtns to Sfc: NO
TTOC: 1902'
- - -

Prod. Csg. Cmt Vol.: 500 sks
Hole Size: 9-3/4" (7" Casing)
Top Job: NO
Rtns to Sfc: NO
TTOC: 4729'
- - -

Liner Cmt Vol.: NONE
Hole Size:
Top Job:
Rtns to Sfc:
TTOC:
- - -
Top of Formation:
UBA: 6892'
BLW: 7273'

Volume Behind Pipe:
1.3 Yield Assumed
Theoretical Calculations (TTOC)

OCCIDENTAL OF ELK HILLS INC

348-34S

Event: WELL MAINT - RIG
Event End: 7/1/2008 00:00
Sec. Reason: SPLIT

Ground Level: 911.0ft
Datum: ORIGINAL KB @ 923.00ft (default)
API No.: 0402927664

Wellbore: ST 1
PBMD: 6,850.0ft
Btm TMD: 7,400.0ft
Spud Date: 5/9/1951 00:00
BH Coord X: 6,147,935.22uss ft
BH Coord Y: 2,286,687.18uss ft

Casing Shoes (ft)	Schematic (7/1/2008)	Openings Top/Btm/Type/Status

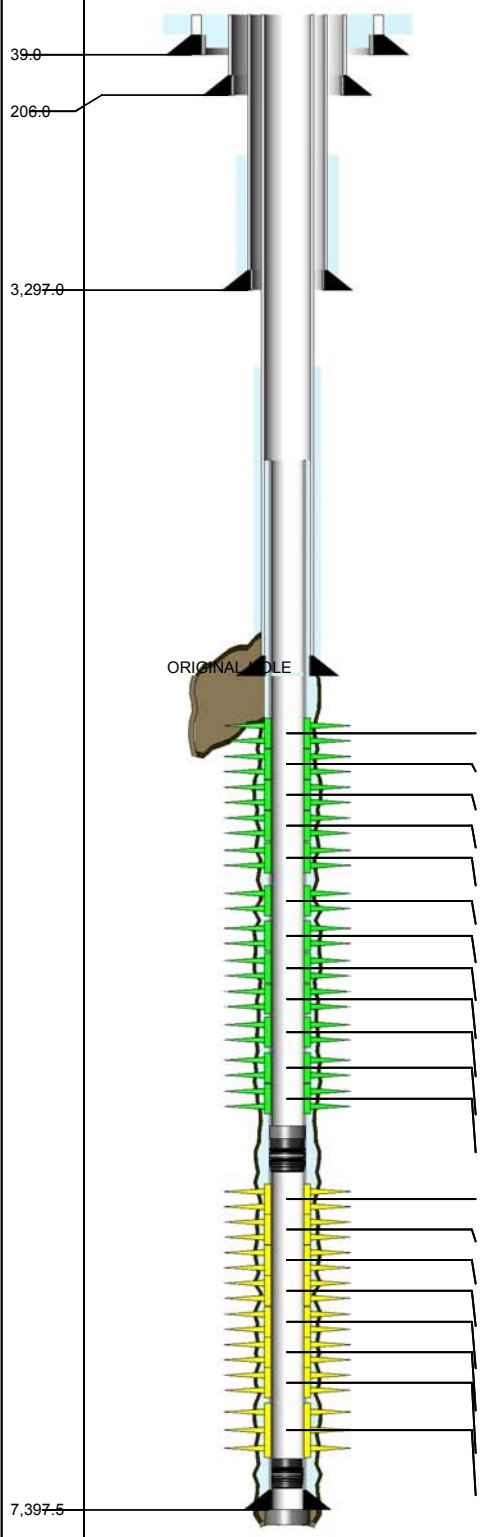

6,282.0ft, 6,297.0ft, PERFORATED, OPEN
6,304.0ft, 6,322.0ft, PERFORATED, OPEN
6,328.0ft, 6,336.0ft, PERFORATED, OPEN
6,342.0ft, 6,352.0ft, PERFORATED, OPEN
6,376.0ft, 6,380.0ft, PERFORATED, OPEN
6,526.0ft, 6,540.0ft, PERFORATED, OPEN
6,590.0ft, 6,600.0ft, PERFORATED, OPEN
6,622.0ft, 6,638.0ft, PERFORATED, OPEN
6,645.0ft, 6,656.0ft, PERFORATED, OPEN
6,683.0ft, 6,695.0ft, PERFORATED, OPEN
6,738.0ft, 6,773.0ft, PERFORATED, OPEN
6,779.0ft, 6,799.0ft, PERFORATED, OPEN
7,134.0ft, 7,146.0ft, PERFORATED, ISOLATED
7,150.0ft, 7,157.0ft, PERFORATED, ISOLATED
7,163.0ft, 7,184.0ft, PERFORATED, ISOLATED
7,190.0ft, 7,193.0ft, PERFORATED, ISOLATED
7,206.0ft, 7,217.0ft, PERFORATED, ISOLATED
7,220.0ft, 7,226.0ft, PERFORATED, ISOLATED
7,230.0ft, 7,245.0ft, PERFORATED, ISOLATED
7,297.0ft, 7,303.0ft, PERFORATED, ISOLATED

ROD STRING — Report Date: 6/28/2008 00:00

Component	Top MD (ft)	Btm MD (ft)
POLROD	0.0	36.0
PNYROD	36.0	38.0
R-4PER	38.0	2,408.0
R-4PER	2,408.0	3,518.0
ROD	3,518.0	5,438.0
R-4PER	5,438.0	6,728.0
RSTBAR	6,728.0	6,732.0
INSPMP	6,732.0	6,756.0

TUBING STRING — Report Date: 6/27/2008 00:00

Component	Top MD (ft)	Btm MD (ft)
TH-DBB	12.0	12.6
FATNIP	12.6	13.3
PUPJNT	13.3	25.6
TBGJNT	25.6	5,434.2
AC	5,434.2	5,436.6
XO	5,436.6	5,437.7
TBGJNT	5,437.7	6,765.9
STNIP	6,765.9	6,767.0
PUPJNT	6,767.0	6,769.2
WLREG	6,769.2	6,769.7

PLUG BACK — Report Date: 12/27/2004 00:00

Component	Top MD (ft)	Btm MD (ft)
CEMENT	6,850.0	6,860.0

PLUG BACK — Report Date: 12/27/2004 00:00

Component	Top MD (ft)	Btm MD (ft)
BP-RET	6,860.0	6,862.0

PLUG BACK — Report Date: 11/20/2002 00:00

Component	Top MD (ft)	Btm MD (ft)
BP-DR	7,339.0	7,341.5

PLUG BACK — Report Date: 10/20/2002 00:

Component	Top MD (ft)	Btm MD (ft)
CEMENT	7,397.5	7,400.0

CONDUCTOR CASING — Report Date: 5/9/1951 00:00

m	OD (in)	Grade	Wt. (ppf)	TopMD (ft)	BtmMD (ft)
ASING JOINT(S)	26.000			12.0	39.0

SURFACE CASING — Report Date: 6/18/1951 00:00

m	OD (in)	Grade	Wt. (ppf)	TopMD (ft)	BtmMD (ft)
ASING JOINT(S)	16.000	H-40	65.00	12.0	206.0

INTERMEDIATE CASING — Report Date: 6/24/1951 00:00

m	OD (in)	Grade	Wt. (ppf)	TopMD (ft)	BtmMD (ft)
ASING JOINT(S)	10.750	J-55	45.50	12.0	53.0
ASING JOINT(S)	10.750	J-55	40.50	53.0	1,967.0
ASING JOINT(S)	10.750	J-55	45.50	1,967.0	3,297.0

PRODUCTION CASING — Report Date: 7/19/1951 00:00

m	OD (in)	Grade	Wt. (ppf)	TopMD (ft)	BtmMD (ft)
ASING JOINT(S)	7.000	N-80	26.00	12.0	68.0
ASING JOINT(S)	7.000	N-80	23.00	68.0	5,897.0
ASING JOINT(S)	7.000	N-80	26.00	5,897.0	7,237.0

LINER — Report Date: 10/20/2002 00:00

m	OD (in)	Grade	Wt. (ppf)	TopMD (ft)	BtmMD (ft)
E BACK RECEPTACLE	6.000			5,468.0	5,474.0
NER HANGER LANDING COLLAR	5.000			5,474.0	5,481.0
ER HANGER	6.276			5,481.0	5,488.1
R	5.000	N-80		5,488.1	5,491.1
ROSSOVER	5.000	N-80		5,491.1	5,492.1
ASING JOINT(S)	5.000	N-80	15.00	5,492.1	7,299.6
NDING COLLAR	5.000	N-80		7,299.6	7,300.8
ASING JOINT(S)	5.000	N-80	15.00	7,300.8	7,394.7
OAT SHOE	5.000	N-80		7,394.7	7,397.5

A window was milled in 7" casing, 5750' - 5783'. The old hole was side tracked and a new 6-1/8" hole drilled 5750' - 7400'. A 5", 15# Liner was hung @ 7400', top @ 5468. The liner was cemented with 265 CF of cement.
The liner was perforated, at intervals, 7134' - 7245'w/ 6 JHPF.

Well: 348-34S-RD1 S/T/R: 34S/30S/24E

CASING CEMENT DETAIL
- - -
Sfc Csg. Cmt Vol.: 645ft3
Bit Size: 22"
Top Job:
Rtns to Sfc: not listed
TTOC: sfc
- - -

Interm Csg. Cmt Vol.: 1032 ft3
Bit Size: 9-3/4"
Top Job:
Rtns to Sfc: Yes
TOC: Sfc - temperature log
- - -

Prod. Csg. Cmt Vol.: 645 ft3
Bit Size: 7"
Top Job:
Rtns to Sfc: not indicated
TTOC: 4670'

Liner Cmt Vol.: 265 ft3
Hole Size: 6-18"
Top Job:
Rtns to Sfc: no
TTOC: 654'
- - -
Top of Formation:
UBA: 6822'
BLW: 7311'

Volume Behind Pipe:
1.3 Yield Assumed
Theoretical Calculations (TTOC) tb.

OCCIDENTAL OF ELK HILLS INC

384-3G

Event: WELL MAINT - RIG
Event End: 4/19/2006 00:00
Sec. Reason:

Ground Level: 951.0ft
Datum: ORIGINAL KB @ 957.00ft (default)
API No.: 0402955947

Wellbore: ORIGINAL HOLE
PBMD: 7,370.0ft
Btm TMD: 8,550.0ft
Spud Date: 12/10/1976 00:00
BH Coord X: 6,150,185.70uss ft
BH Coord Y: 2,284,481.40uss ft

Casing Shoes (ft) | Schematic (5/1/2006) | Openings Top/Btm/Type/Status

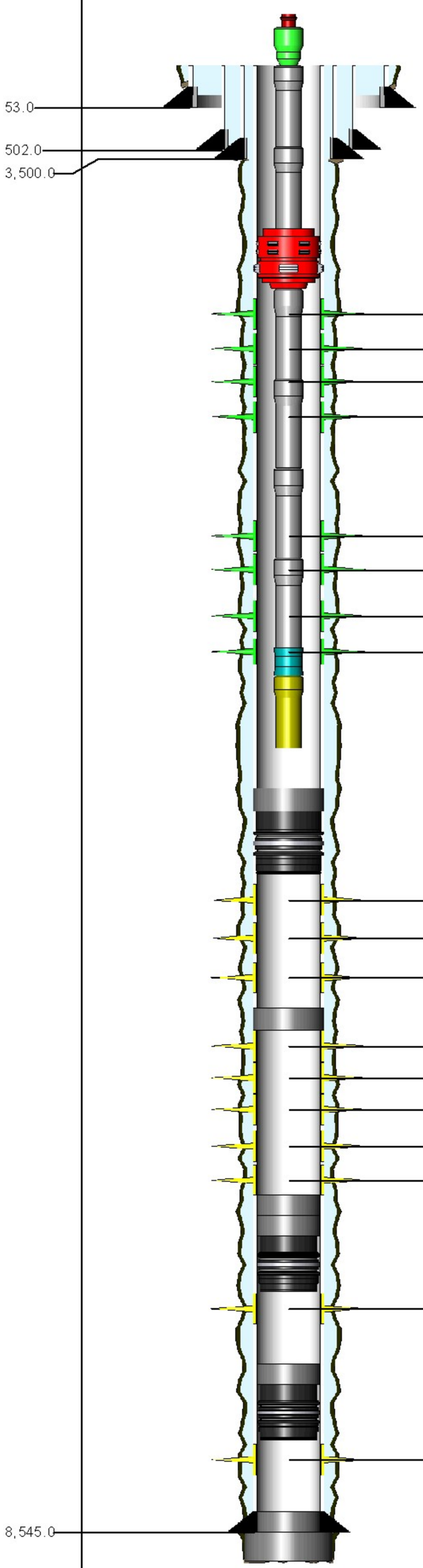

6,852.0ft, 6,866.0ft, PERFORATED, OPEN
6,880.0ft, 6,891.0ft, PERFORATED, OPEN
6,898.0ft, 6,916.0ft, PERFORATED, OPEN
6,930.0ft, 6,942.0ft, PERFORATED, OPEN
7,234.0ft, 7,242.0ft, PERFORATED, OPEN
7,250.0ft, 7,262.0ft, PERFORATED, OPEN
7,304.0ft, 7,318.0ft, PERFORATED, OPEN
7,332.0ft, 7,348.0ft, PERFORATED, OPEN
7,417.0ft, 7,422.0ft, PERFORATED, ISOLATE
7,444.0ft, 7,466.0ft, PERFORATED, ISOLATE
7,484.0ft, 7,509.0ft, PERFORATED, ISOLATE
7,520.0ft, 7,565.0ft, PERFORATED, ISOLATE
7,575.0ft, 7,645.0ft, PERFORATED, ISOLATE
7,653.0ft, 7,795.0ft, PERFORATED, ISOLATE
7,840.0ft, 7,962.0ft, PERFORATED, ISOLATE
7,978.0ft, 8,100.0ft, PERFORATED, ISOLATE
8,134.0ft, 8,165.0ft, PERFORATED, ISOLATE
8,370.0ft, 8,512.0ft, PERFORATED, ISOLATE

ROD STRING Report Date: 3/18/2006 00:00

Component	Top MD (ft)	Btm MD (ft)
POLROD	0.0	30.0
PNYROD	30.0	58.0
ROD	58.0	2,638.0
ROD	2,638.0	7,348.0
RSTBAR	7,348.0	7,352.0
INSPMP	7,352.0	7,376.0

TUBING STRING Report Date: 1/2/2006 00:00

Component	Top MD (ft)	Btm MD (ft)
TH-DBB	6.0	6.7
FATNIP	6.7	7.4
TBGJNT	7.4	6,812.3
AC	6,812.3	6,814.7
TBGJNT	6,814.7	7,347.4
STNIP	7,347.4	7,348.5
PUPJNT	7,348.5	7,354.6

PLUG BACK Report Date: 4/26/2005 00:00

Component	Top MD (ft)	Btm MD (ft)
CEMENT	7,370.0	7,380.0
BP-DR	7,380.0	7,382.6

PLUG BACK Report Date: 7/23/2004 00:00

Component	Top MD (ft)	Btm MD (ft)
PLUGBK	7,514.0	7,516.3

PLUG BACK Report Date: 4/29/1984 00:00

Component	Top MD (ft)	Btm MD (ft)
CEMENT	8,100.0	8,113.0

PLUG BACK Report Date: 1/4/1978 00:00

Component	Top MD (ft)	Btm MD (ft)
CEMENT	8,113.0	8,125.0
BP-DR	8,125.0	8,127.0

PLUG BACK Report Date: 11/23/1977 00:00

Component	Top MD (ft)	Btm MD (ft)
CEMENT	8,340.0	8,350.0
BP-DR	8,350.0	8,352.0

PLUG BACK Report Date: 8/28/1977 00:00

Component	Top MD (ft)	Btm MD (ft)
CEMENT	8,530.0	8,545.0

PLUG BACK Report Date: 8/26/1977 00:00

Component	Top MD (ft)	Btm MD (ft)
CEMENT	8,545.0	8,550.0

CONDUCTOR CASING Report Date: 12/10/1976 00:00

Item	OD (in)	Grade	Wt. (ppf)	TopMD (ft)	BtmMD (ft)
CASING JOINT(S)	20.000			12.0	53.0

SURFACE CASING Report Date: 7/28/1977 00:00

Item	OD (in)	Grade	Wt. (ppf)	TopMD (ft)	BtmMD (ft)
CASING JOINT(S)	13.375	H-40	48.00	12.0	502.0

INTERMEDIATE CASING Report Date: 8/2/1977 00:00

Item	OD (in)	Grade	Wt. (ppf)	TopMD (ft)	BtmMD (ft)
CASING JOINT(S)	9.625	N-80	40.00	12.0	3,004.0
CASING JOINT(S)	9.625	L-80	40.00	3,004.0	3,500.0

PRODUCTION CASING Report Date: 8/26/1977 00:00

Item	OD (in)	Grade	Wt. (ppf)	TopMD (ft)	BtmMD (ft)
CASING JOINT(S)	7.000	K-55	26.00	12.0	80.5
CASING JOINT(S)	7.000	K-55	23.00	80.5	5,125.5
CASING JOINT(S)	7.000	K-55	26.00	5,125.5	6,801.5
FLAG JOINT	7.000	K-55	26.00	6,801.5	6,822.8
CASING JOINT(S)	7.000	K-55	26.00	6,822.8	8,545.0

Well: 384-3G S/T/R: 3G/31S/24E

CASING CEMENT DETAIL
- - -
Sfc Csg. Cmt Vol.: 390 cf
Hole Size: 17.5"
Top Job: No
Rtns to Sfc: Trace
TOC: Sfc
- - -

Interm Csg. Cmt Vol.: 1773 cf
Hole Size: 12.25"
Top Job: No
Rtns to Sfc:
TTOC: Sfc
- - -

Prod. Csg. Cmt Vol.: 2600 cf
Hole Size: 8.75"
Top Job: No
Rtns to Sfc:
TTOC: Sfc

Liner Cmt Vol.:
Hole Size:
Top Job:
Rtns to Sfc:
TTOC:
- - -
Top of Formation:
UBA: 7520'
BLW: 8168'

Volume Behind Pipe:
1.3 Yield Assumed
Theoretical Calculations (TTOC)

OCCIDENTAL OF ELK HILLS INC

384-4G

Event: WELL MAINT - RIGLESS
Event End: 3/17/2008 00:00
Sec. Reason:

Ground Level: 1,002.0ft
Datum: ORIGINAL KB @ 1,011.00ft (default)
API No.: 0402929072

Wellbore: ORIGINAL HOLE
PBMD: 7,130.0ft
Btm TMD: 7,967.0ft
Spud Date: 5/25/1951 00:00
BH Coord X: 6,145,185.89uss ft
BH Coord Y: 2,284,375.13uss ft

Casing Shoes (ft) | Schematic (4/1/2008) | Openings Top/Btm/Type/Status

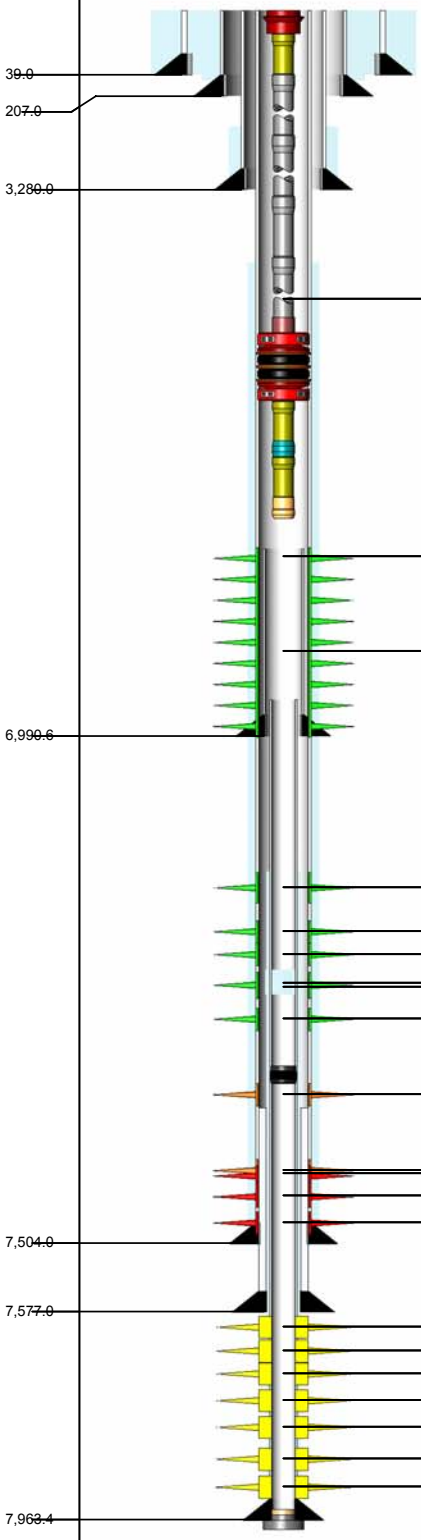

6,350.0ft, 6,351.0ft, WSO PERFS, SQUEEZED
6,970.0ft, 6,975.0ft, PERFORATED, OPEN
6,975.0ft, 6,993.0ft, PERFORATED, OPEN
7,009.0ft, 7,012.0ft, PERFORATED, OPEN
7,020.0ft, 7,025.0ft, PERFORATED, OPEN
7,026.0ft, 7,034.0ft, PERFORATED, OPEN
7,045.0ft, 7,050.0ft, PERFORATED, OPEN
7,046.0ft, 7,056.0ft, PERFORATED, OPEN
7,072.0ft, 7,078.0ft, PERFORATED, OPEN
7,135.0ft, 7,140.0ft, PERFORATED, SQUEEZED
7,270.0ft, 7,360.0ft, PERFORATED, SQUEEZED
7,295.0ft, 7,360.0ft, PERFORATED, ABANDONE
7,375.0ft, 7,430.0ft, PERFORATED, ABANDONE
7,445.0ft, 7,490.0ft, PERFORATED, ABANDONE
7,602.0ft, 7,630.0ft, PERFORATED, ISOLATED
7,638.0ft, 7,646.0ft, PERFORATED, ISOLATED
7,649.0ft, 7,668.0ft, PERFORATED, ISOLATED
7,690.0ft, 7,728.0ft, PERFORATED, ISOLATED
7,744.0ft, 7,747.0ft, PERFORATED, ISOLATED
7,781.0ft, 7,800.0ft, PERFORATED, ISOLATED
7,814.0ft, 7,828.0ft, PERFORATED, ISOLATED

TUBING STRING — Report Date: 12/18/2007 00:00

Component	Top MD (ft)	Btm MD (ft)
TH-DBB	9.0	9.7
PUPJNT	9.7	11.4
CAS	11.4	6,867.6
ON-OFF	6,867.6	6,870.7
PKR	6,870.7	6,878.1
PUPJNT	6,878.1	6,884.2
PRONIP	6,884.2	6,885.5
PUPJNT	6,885.5	6,891.7
WLREG	6,891.7	6,892.2

PLUG BACK — Report Date: 11/28/2007 00:00

Component	Top MD (ft)	Btm MD (ft)
BP-DR	7,130.0	7,133.0

PLUG BACK — Report Date: 4/9/2003 00:00

Component	Top MD (ft)	Btm MD (ft)
FILL	7,841.0	7,878.0

PLUG BACK — Report Date: 2/27/2003 00:00

Component	Top MD (ft)	Btm MD (ft)
CEMENT	7,878.0	7,963.4

PLUG BACK — Report Date: 12/18/2002 00:00

Component	Top MD (ft)	Btm MD (ft)
CEMENT	7,963.4	7,967.0

CONDUCTOR CASING — Report Date: 5/25/1951 00:00

Item	OD (in)	Grade	Wt. (ppf)	TopMD (ft)	BtmMD (ft)
CASING JOINT(S)	26.000			9.0	39.0

SURFACE CASING — Report Date: 7/26/1951 00:00

Item	OD (in)	Grade	Wt. (ppf)	TopMD (ft)	BtmMD (ft)
CASING JOINT(S)	16.000	H-40	65.00	9.0	207.0

INTERMEDIATE CASING — Report Date: 7/31/1951 00:00

Item	OD (in)	Grade	Wt. (ppf)	TopMD (ft)	BtmMD (ft)
CASING JOINT(S)	10.750	J-55	45.50	9.0	23.0
CASING JOINT(S)	10.750	J-55	40.50	23.0	2,014.0
CASING JOINT(S)	10.750	J-55	45.50	2,014.0	3,280.0

PRODUCTION CASING — Report Date: 8/31/1951 00:00

Item	OD (in)	Grade	Wt. (ppf)	TopMD (ft)	BtmMD (ft)
CASING JOINT(S)	7.000	N-80	26.00	9.0	65.0
CASING JOINT(S)	7.000	N-80	23.00	65.0	5,812.0
CASING JOINT(S)	7.000	N-80	26.00	5,812.0	7,504.0

LINER TIE-BACK — Report Date: 2/18/2003 00:00

Item	OD (in)	Grade	Wt. (ppf)	TopMD (ft)	BtmMD (ft)
TIE BACK RECEPTACLE	5.250			6,972.0	6,979.0
CROSSOVER	5.000			6,979.0	6,980.0
LINER HANGER PACKER	5.000			6,980.0	6,982.8
LINER TIEBACK SEAL ASSEMBLY	5.250			6,982.8	6,990.6

LINER — Report Date: 12/11/2002 00:00

Item	OD (in)	Grade	Wt. (ppf)	TopMD (ft)	BtmMD (ft)
LINER HANGER	6.276	N-80	15.00	7,151.2	7,158.4
CASING JOINT(S)	5.000	N-80	15.00	7,158.4	7,527.9
CASING JOINT(S)	5.000	N-80	15.00	7,527.9	7,574.2
FLOAT SHOE	5.000	N-80	15.00	7,574.2	7,577.0

INNER LINER — Report Date: 12/18/2002 00:00

Item	OD (in)	Grade	Wt. (ppf)	TopMD (ft)	BtmMD (ft)
PUP JOINT	3.500	N-80	9.30	6,983.0	6,993.0
LINER HANGER PACKER	6.276	N-80	9.30	6,993.0	7,002.5
LINER HANGER	6.276	N-80	9.30	7,002.5	7,008.8
PBR	3.500	N-80	9.30	7,008.8	7,011.8
CROSSOVER	3.500	N-80	9.30	7,011.8	7,013.4
CASING JOINT(S)	3.500	N-80	9.30	7,013.4	7,929.6
LANDING COLLAR	3.500	N-80	9.30	7,929.6	7,930.8
CASING JOINT(S)	3.500	N-80	9.30	7,930.8	7,960.4
FLOAT SHOE	3.500	N-80	9.30	7,960.4	7,963.4

Well: 384-4G S/T/R: 4G/31S/24E

CASING CEMENT DETAIL
- - -
Sfc Csg. Cmt Vol.: 590 (calc 500sx O)
Hole Size : 22"
Top Job: no
Rtns to Sfc : yes
TOC : sfc
- - -
Interm Csg. Cmt Vol.: 690 (calc 600sx C)
Hole Size : 15"
Top Job: no
Rtns to Sfc): not recorded
TTOC : 2124'
- - -
Prod. Csg. Cmt Vol.: 590 (calc 500sx S)
Hole Size : 9.75"
Top Job: no
Rtns to Sfc: not recorded
TTOC: 5155'
- - -
Liner Cmt Vol.: 56.2 cf (calc 10 bbl TXI)
Hole Size: 7"
Top Job: no
Rtns to Sfc: reversed out cmt
TOC: TOL
- - -
Inner Liner Cmt: 112.3 cf (calc 20 bbl TXI)
Hole Size: 5.25""
Top Job: no
Rtns to Sfc: reverse out cmt
TOC: TOL
- - -
Top of Formation:
UBA: 7272'
BLW: 7889'

Volume Behind Pipe:
1.3 Yield Assumed
Theoretical Calculations (TTOC)

Event: ART LIFT REVISION
Event End: 4/5/2008 00:00
Sec. Reason: REPERFORATE
End Status: FINISHED - SUCCESS
Well Classification: DEVELOPMENT

OCCIDENTAL OF ELK HILLS INC

385-34S

Ground Level: 814.0ft
Datum: ORIGINAL KB @ 828.00ft (default)
API No.: 0402967097

Wellbore: ORIGINAL HOLE
PBMD: 7,294.0ft
Btm TMD: 7,346.7ft
Spud Date: 6/1/1982 00:00
BH Coord X: 6,150,695.86uss ft
BH Coord Y: 2,288,976.45uss ft

Casing Shoes (ft)	Schematic (4/5/2008)	Openings Top/Btm/Type/Status

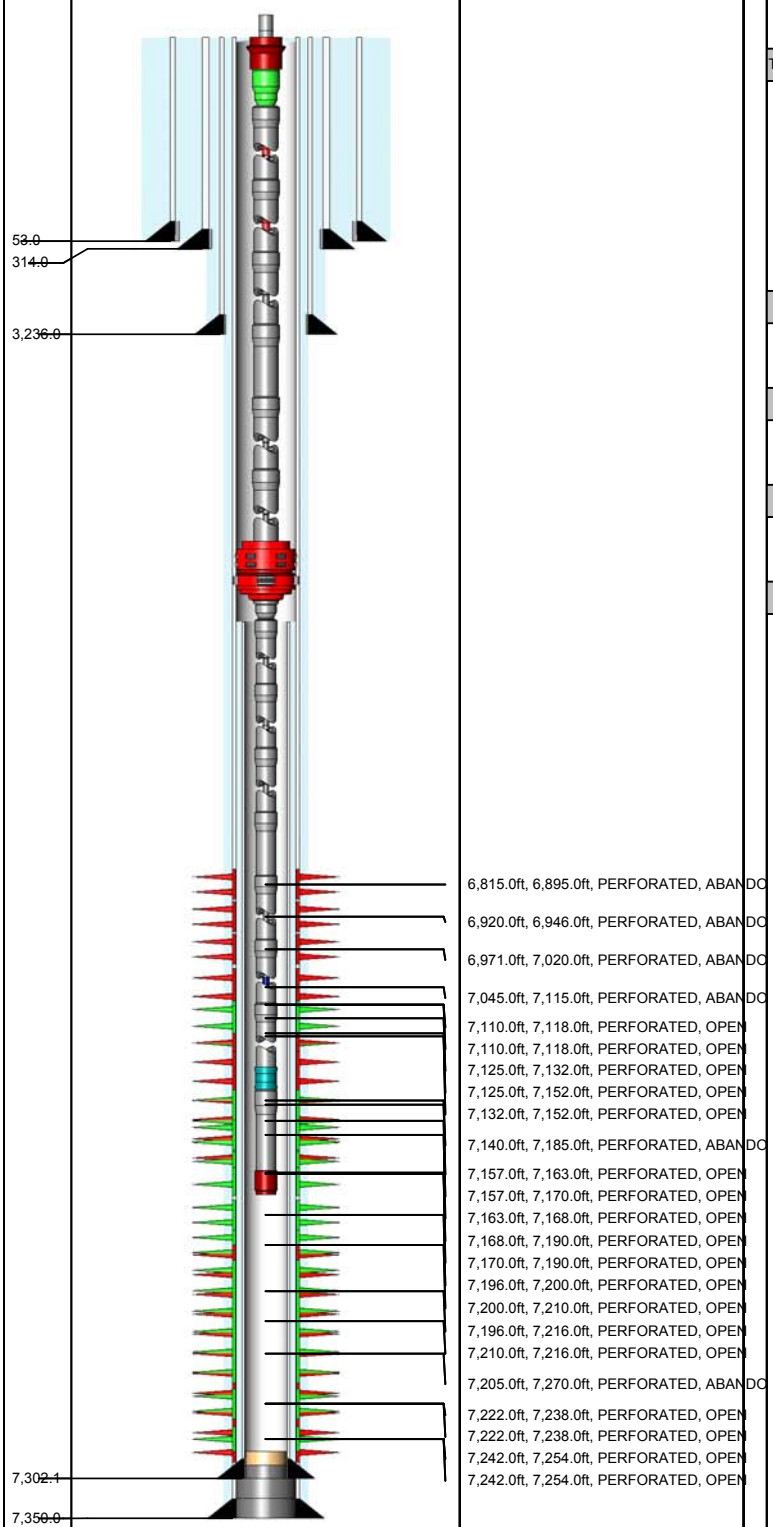

6,815.0ft, 6,895.0ft, PERFORATED, ABANDO
6,920.0ft, 6,946.0ft, PERFORATED, ABANDO
6,971.0ft, 7,020.0ft, PERFORATED, ABANDO
7,045.0ft, 7,115.0ft, PERFORATED, ABANDO
7,110.0ft, 7,118.0ft, PERFORATED, OPEN
7,110.0ft, 7,118.0ft, PERFORATED, OPEN
7,125.0ft, 7,132.0ft, PERFORATED, OPEN
7,125.0ft, 7,152.0ft, PERFORATED, OPEN
7,132.0ft, 7,152.0ft, PERFORATED, OPEN
7,140.0ft, 7,185.0ft, PERFORATED, ABANDO
7,157.0ft, 7,163.0ft, PERFORATED, OPEN
7,157.0ft, 7,170.0ft, PERFORATED, OPEN
7,163.0ft, 7,168.0ft, PERFORATED, OPEN
7,168.0ft, 7,190.0ft, PERFORATED, OPEN
7,170.0ft, 7,190.0ft, PERFORATED, OPEN
7,196.0ft, 7,200.0ft, PERFORATED, OPEN
7,200.0ft, 7,210.0ft, PERFORATED, OPEN
7,196.0ft, 7,216.0ft, PERFORATED, OPEN
7,210.0ft, 7,216.0ft, PERFORATED, OPEN
7,205.0ft, 7,270.0ft, PERFORATED, ABANDO
7,222.0ft, 7,238.0ft, PERFORATED, OPEN
7,222.0ft, 7,238.0ft, PERFORATED, OPEN
7,242.0ft, 7,254.0ft, PERFORATED, OPEN
7,242.0ft, 7,254.0ft, PERFORATED, OPEN

ROD STRING Report Date: 4/4/2008 00:00

Component	Top MD (ft)	Btm MD (ft)
POLROD	0.0	36.0
PNYROD	36.0	46.0
ROD	46.0	3,316.0
ROD	3,316.0	4,996.0
R-4PER	4,996.0	5,896.0
ROD	5,896.0	7,096.0
RSTBAR	7,096.0	7,100.0
INSPMP	7,100.0	7,130.0

TUBING STRING Report Date: 4/3/2008 00:00

Component	Top MD (ft)	Btm MD (ft)
TH-DBB	14.0	14.7
FATNIP	14.7	15.3
CAS	15.3	6,390.9
AC	6,390.9	6,393.2
CAS	6,393.2	6,456.4
XO	6,456.4	6,457.5
CAS	6,457.5	7,155.4
STNIP	7,155.4	7,156.4
CAS	7,156.4	7,188.0
STCOLL	7,188.0	7,188.4

PLUG BACK Report Date: 6/21/2002 00:00

Component	Top MD (ft)	Btm MD (ft)
FILL	7,254.0	7,274.0

PLUG BACK Report Date: 3/30/2002 00:00

Component	Top MD (ft)	Btm MD (ft)
CEMENT	7,274.0	7,302.1

PLUG BACK Report Date: 3/26/2002 00:00

Component	Top MD (ft)	Btm MD (ft)
CEMENT	7,302.1	7,304.0

PLUG BACK Report Date: 9/28/1982 00:00

Component	Top MD (ft)	Btm MD (ft)
CEMENT	7,304.0	7,350.0

CONDUCTOR CASING Report Date: 6/7/1982 00:00

Item	OD (in)	Grade	Wt. (ppf)	TopMD (ft)	BtmMD (ft)
CASING JOINT(S)	20.000			14.0	53.0

SURFACE CASING Report Date: 6/23/1982 00:00

Item	OD (in)	Grade	Wt. (ppf)	TopMD (ft)	BtmMD (ft)
CASING JOINT(S)	13.275			14.0	314.0

INTERMEDIATE CASING Report Date: 6/28/1982 00:00

Item	OD (in)	Grade	Wt. (ppf)	TopMD (ft)	BtmMD (ft)
CASING JOINT(S)	9.625	K-55	40.00	14.0	3,236.0

PRODUCTION CASING Report Date: 7/14/1982 00:00

Item	OD (in)	Grade	Wt. (ppf)	TopMD (ft)	BtmMD (ft)
CASING JOINT(S)	7.000	K-55	26.00	14.0	77.0
CASING JOINT(S)	7.000	K-55	23.00	77.0	5,075.6
CASING JOINT(S)	7.000	K-55	26.00	5,075.6	6,300.1
FLAG JOINT	7.000	K-55	26.00	6,300.1	6,317.8
CASING JOINT(S)	7.000	K-55	26.00	6,317.8	7,303.8
FLOAT COLLAR	7.000	K-55	26.00	7,303.8	7,306.4
CASING JOINT(S)	7.000	K-55	26.00	7,306.4	7,349.0
GUIDE SHOE	7.000	K-55	26.00	7,349.0	7,350.0

INNER LINER Report Date: 3/26/2002 00:00

Item	OD (in)	Grade	Wt. (ppf)	TopMD (ft)	BtmMD (ft)
LINER HANGER PACKER	5.000	P-110	18.00	6,497.0	6,510.0
SEAL NIPPLE	5.000	P-110	18.00	6,510.0	6,512.8
LINER HANGER	5.000	P-110	18.00	6,512.8	6,519.1
CASING JOINT(S)	5.000	P-110	18.00	6,519.1	7,253.4
LANDING COLLAR	5.000	P-110	18.00	7,253.4	7,254.9
FLOAT COLLAR	5.000	P-110	18.00	7,254.9	7,256.4
CASING JOINT(S)	5.000	P-110	18.00	7,256.4	7,300.2
SET SHOE	5.000	P-110	18.00	7,300.2	7,302.1

Well: 385-34S S/T/R: 34S/30S/24E

CASING CEMENT DETAIL
- - -
Sfc Csg. Cmt Vol.: 500 cf
Hole Size: 17-1/2" (13-3/8" Casing)
Top Job: No
Rtns to Sfc: YES
TTOC: NA
- - -

Interm Csg. Cmt Vol.: 2010 cf
Hole Size: 12-1/4" (9-5/8" Casing)
Top Job: NO
Rtns to Sfc: YES
TTOC: NA
- - -

Prod. Csg. Cmt Vol.: 1650 cf
Hole Size: 8-3/4" (7" Casing)
Top Job: NO
Rtns to Sfc: NO
TTOC: Surface
- - -

Liner Cmt Vol.: 90 cf
Hole Size: 7" (5" Casing)
Top Job: NO
Rtns to Sfc: NO
TTOC: 6979'
- - -
Top of Formation:
UBA: 6809'
BLW: 7296'

Volume Behind Pipe:
1.3 Yield Assumed
Theoretical Calculations (TTOC)

Event: WELL MAINT - RIGLESS
Event End:
Sec. Reason:
End Status:
Well Classification: DEVELOPMENT

OCCIDENTAL OF ELK HILLS INC

385-35S

Ground Level: 674.4ft
Datum: ORIGINAL KB @ 697.40ft (default)
API No.: 0403024784

Wellbore: ORIGINAL HOLE
PBMD: 7,375.0ft
Btm TMD: 7,396.0ft
Spud Date: 10/30/2004 00:00
BH Coord X: 6,155,707.35uss ft
BH Coord Y: 2,288,857.69uss ft

Casing Shoes (ft)	Schematic (9/10/2009)	Openings Top/Btm/Type/Status

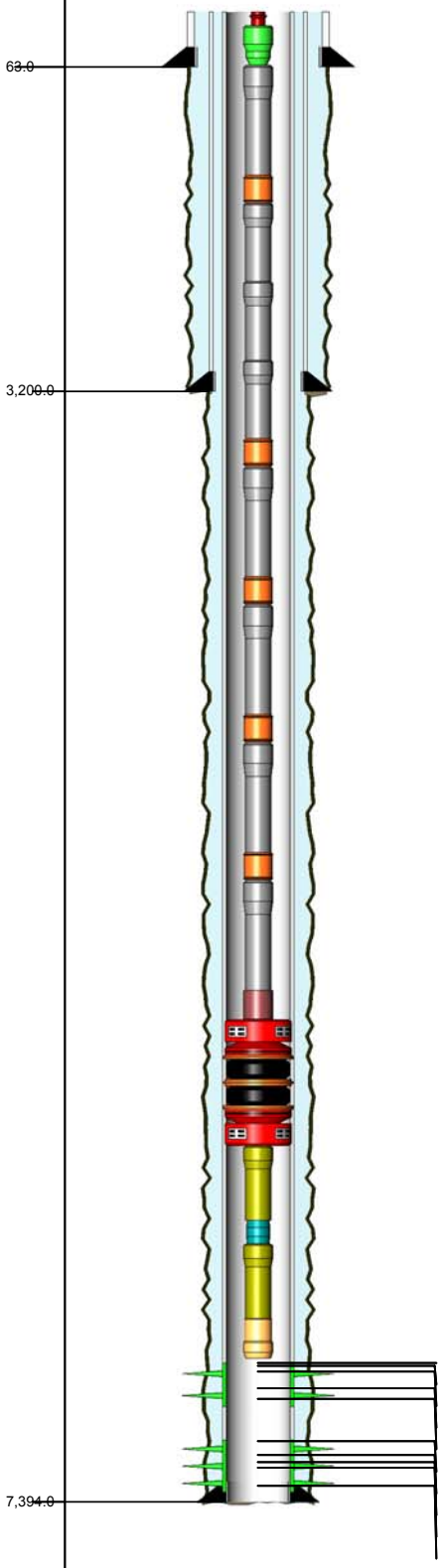

6,717.0ft, 6,720.0ft, PERFORATED, OPEN
6,730.0ft, 6,735.0ft, PERFORATED, OPEN
6,754.0ft, 6,768.0ft, PERFORATED, OPEN
6,838.0ft, 6,845.0ft, PERFORATED, OPEN
6,856.0ft, 6,930.0ft, PERFORATED, OPEN
7,094.0ft, 7,104.0ft, PERFORATED, OPEN
7,157.0ft, 7,175.0ft, PERFORATED, OPEN
7,198.0ft, 7,203.0ft, PERFORATED, OPEN
7,214.0ft, 7,242.0ft, PERFORATED, OPEN
7,285.0ft, 7,346.0ft, PERFORATED, OPEN

TUBING STRING Report Date: 11/29/2004 00:00

Component	Top MD (ft)	Btm MD (ft)
TH-DBB	23.0	23.8
FATNIP	23.8	24.4
TBGJNT	24.4	2,208.3
GLM-V	2,208.3	2,216.7
TBGJNT	2,216.7	3,895.1
GLM-V	3,895.1	3,903.9
TBGJNT	3,903.9	5,153.3
GLM-V	5,153.3	5,162.2
TBGJNT	5,162.2	6,005.6
GLM-V	6,005.6	6,014.3
TBGJNT	6,014.3	6,641.2
GLM-V	6,641.2	6,649.7
TBGJNT	6,649.7	6,681.0
ON-OFF	6,681.0	6,682.5
PKR-S	6,682.5	6,686.5
PUPJNT	6,686.5	6,690.6
PNIP-C	6,690.6	6,691.6
PUPJNT	6,691.6	6,695.6
WLREG	6,695.6	6,696.1

CONDUCTOR CASING Report Date: 6/25/2004 00:00

Item	OD (in)	Grade	Wt. (ppf)	TopMD (ft)	BtmMD (ft)
CASING JOINT(S)	14.000			23.0	63.0

SURFACE CASING Report Date: 11/2/2004 00:00

Item	OD (in)	Grade	Wt. (ppf)	TopMD (ft)	BtmMD (ft)
CASING JOINT(S)	9.625	K-55	36.00	23.0	3,176.6
FLOAT COLLAR	9.625	K-55	36.00	3,176.6	3,177.5
CASING JOINT(S)	9.625	K-55	36.00	3,177.5	3,199.0
GUIDE SHOE	9.625	K-55	36.00	3,199.0	3,200.0

PRODUCTION CASING Report Date: 11/10/2004 00:00

Item	OD (in)	Grade	Wt. (ppf)	TopMD (ft)	BtmMD (ft)
CASING JOINT(S)	7.000	K-55	23.00	23.0	5,460.6
CASING JOINT(S)	7.000	N-80	23.00	5,460.6	6,069.0
CASING JOINT(S)	7.000	P-110	23.00	6,069.0	6,158.3
CASING JOINT(S)	7.000	N-80	26.00	6,158.3	7,296.2
FLOAT COLLAR	7.000	N-80	26.00	7,296.2	7,297.7
CASING JOINT(S)	7.000	N-80	26.00	7,297.7	7,392.3
FLOAT SHOE	7.000	N-80	26.00	7,392.3	7,394.0

Well: 385-35S S/T/R: 35S/30S/24E

CASING CEMENT DETAIL
- - -
Sfc Csg. Cmt Vol.: 1485 cf
Hole Size: 12.25"
Top Job: no
Rtns to Sfc: 35 bbls
TOC: sfc
- - -

Interm Csg. Cmt Vol.:
Hole Size:
Top Job:
Rtns to Sfc:
TOC:
- - -

Prod. Csg. Cmt Vol.: 1573 cf
Hole Size: 8.75"
Top Job: no
Rtns to Sfc: 1 bbl
TOC: sfc
- - -

Liner Cmt Vol.:
Hole Size:
Top Job:
Rtns to Sfc:
TTOC:
- - -
Top of Formation:
UBA: NA
BLW: NA

Volume Behind Pipe:
1.3 Yield Assumed
Theoretical Calculations (TTOC)

OCCIDENTAL OF ELK HILLS INC

385X-33S

Event: WELL MAINT - RIG
Event End: 11/19/2008 00:00
Sec. Reason: BODY BREAK
End Status: FINISHED - SUCCESS
Well Classification: DEVELOPMENT

Ground Level: 937.0ft
Datum: ORIGINAL KB @ 951.00ft (default)
API No.: 0402967346

Wellbore: ST1
PBMD: 7,610.0ft
Btm TMD: 7,668.0ft
Spud Date: 8/1/1982 00:00
BH Coord X: 6,145,290.36uss ft
BH Coord Y: 2,288,985.40uss ft

Casing Shoes (ft)	Schematic (12/1/2008)	Openings Top/Btm/Type/Status

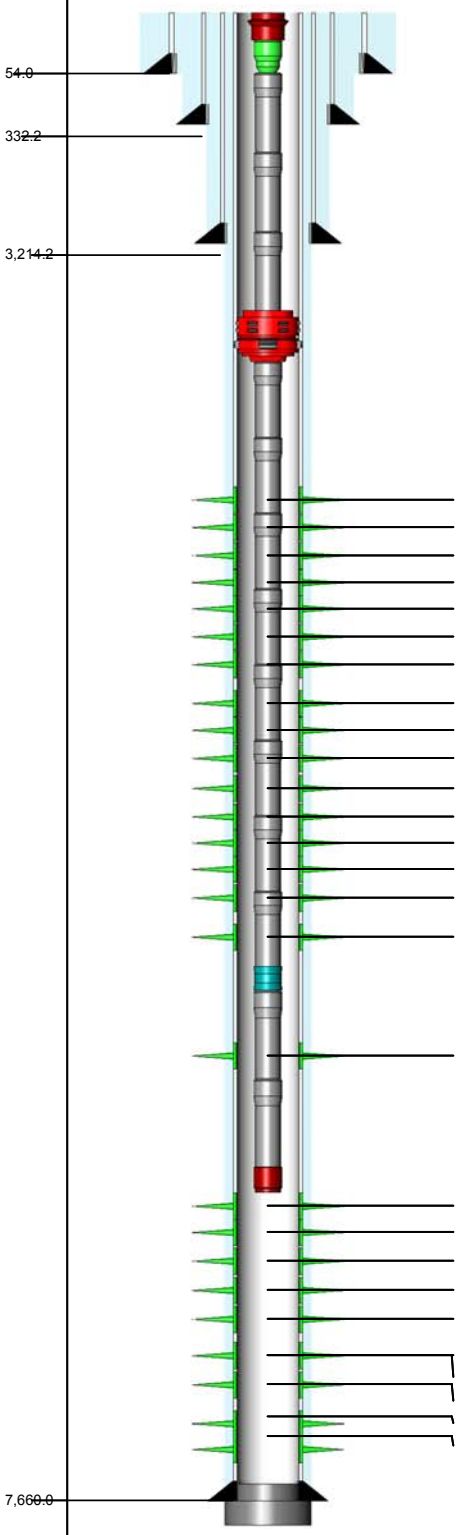

6,557.0ft, 6,578.0ft, PERFORATED, OPEN
6,587.0ft, 6,594.0ft, PERFORATED, OPEN
6,608.0ft, 6,615.0ft, PERFORATED, OPEN
6,620.0ft, 6,627.0ft, PERFORATED, OPEN
6,627.0ft, 6,634.0ft, PERFORATED, OPEN
6,646.0ft, 6,662.0ft, PERFORATED, OPEN
6,672.0ft, 6,684.0ft, PERFORATED, OPEN
6,762.0ft, 6,768.0ft, PERFORATED, OPEN
6,772.0ft, 6,778.0ft, PERFORATED, OPEN
6,789.0ft, 6,794.0ft, PERFORATED, OPEN
6,816.0ft, 6,837.0ft, PERFORATED, OPEN
6,848.0ft, 6,855.0ft, PERFORATED, OPEN
6,855.0ft, 6,862.0ft, PERFORATED, OPEN
6,862.0ft, 6,882.0ft, PERFORATED, OPEN
6,892.0ft, 6,942.0ft, PERFORATED, OPEN
6,972.0ft, 7,002.0ft, PERFORATED, OPEN
7,022.0ft, 7,030.0ft, PERFORATED, OPEN
7,050.0ft, 7,058.0ft, PERFORATED, OPEN
7,058.0ft, 7,105.0ft, PERFORATED, OPEN
7,135.0ft, 7,210.0ft, PERFORATED, OPEN
7,240.0ft, 7,260.0ft, PERFORATED, OPEN
7,285.0ft, 7,340.0ft, PERFORATED, OPEN
7,420.0ft, 7,440.0ft, REPERFORATED, OPEN
7,420.0ft, 7,440.0ft, PERFORATED, OPEN
7,460.0ft, 7,480.0ft, PERFORATED, OPEN
7,460.0ft, 7,505.0ft, PERFORATED, OPEN
7,485.0ft, 7,505.0ft, PERFORATED, OPEN

ROD STRING — Report Date: 11/19/2008 00:00

Component	Top MD (ft)	Btm MD (ft)
POLROD	0.0	36.0
POLRDL	36.0	36.0
PNYROD	36.0	46.0
ROD	46.0	2,836.0
ROD	2,836.0	5,326.0
R-4PER	5,326.0	6,976.0
RSTBAR	6,976.0	6,980.0
INSPMP	6,980.0	7,010.0

TUBING STRING — Report Date: 11/19/2008 00:00

Component	Top MD (ft)	Btm MD (ft)
TH-DBB	14.0	14.6
FATNIP	14.6	15.3
TBGJNT	15.3	5,790.0
AC	5,790.0	5,792.4
TBGJNT	5,792.4	7,009.9
STNIP	7,009.9	7,011.0
TBGJNT	7,011.0	7,042.5
STCOLL	7,042.5	7,042.9

PLUG BACK — Report Date: 11/18/1983 00:00

Component	Top MD (ft)	Btm MD (ft)
CEMENT	7,610.0	7,660.0

PLUG BACK — Report Date: 9/18/1982 00:00

Component	Top MD (ft)	Btm MD (ft)
CEMENT	7,660.0	7,668.0

CONDUCTOR CASING — Report Date: 8/18/1982 00:00

Item	OD (in)	Grade	Wt. (ppf)	TopMD (ft)	BtmMD (ft)
CASING JOINT(S)	20.000			14.0	54.0

SURFACE CASING — Report Date: 8/28/1982 00:00

Item	OD (in)	Grade	Wt. (ppf)	TopMD (ft)	BtmMD (ft)
CASING JOINT(S)	13.375	H-40	48.00	14.0	329.8
GUIDE SHOE	13.375			329.8	331.0

INTERMEDIATE CASING — Report Date: 9/1/1982 00:00

Item	OD (in)	Grade	Wt. (ppf)	TopMD (ft)	BtmMD (ft)
CASING JOINT(S)	9.625	K-55	40.00	14.0	3,211.8
GUIDE SHOE	9.625			3,211.8	3,213.0

PRODUCTION CASING — Report Date: 9/18/1982 00:00

Item	OD (in)	Grade	Wt. (ppf)	TopMD (ft)	BtmMD (ft)
CASING JOINT(S)	7.000	N-80	26.00	14.0	76.8
CASING JOINT(S)	7.000	K-55	23.00	76.8	5,003.1
CASING JOINT(S)	7.000	K-55	26.00	5,003.1	6,378.7
FLAG JOINT	7.000	K-55	26.00	6,378.7	6,404.8
FLAG JOINT	7.000	K-55	26.00	6,404.8	6,420.0
CASING JOINT(S)	7.000	K-55	26.00	6,420.0	6,662.9
CASING JOINT(S)	7.000	N-80	26.00	6,662.9	7,610.5
FLOAT COLLAR	7.000	N-80		7,610.5	7,613.0
CASING JOINT(S)	7.000	N-80	26.00	7,613.0	7,657.9
FLOAT SHOE	7.000	N-80		7,657.9	7,660.0

Well: 385X-33S S/T/R: 33S/30S/24E

CASING CEMENT DETAIL
- - -
Sfc Csg. Cmt Vol.: 500 cf
Hole Size: 17.5"
Top Job: no
Rtns to Sfc: 80 cf
TOC: sfc
- - -

Interm Csg. Cmt Vol.: 1530 cf
Hole Size: 12.25"
Top Job: 20 sks cmt
Rtns to Sfc: no
TTOC: sfc
- - -

Prod. Csg. Cmt Vol.: 1790 cf
Hole Size: 8.75"
Top Job: no
Rtns to Sfc: no
TTOC: sfc
- - -

Liner Cmt Vol.:
Hole Size:
Top Job:
Rtns to Sfc :
TTOC:
- - -
Top of Formation:
UBA: 7075'
BLW: 7525'

Volume Behind Pipe:
1.3 Yield Assumed
Theoretical Calculations (TTOC)

Event: WELL MAINT - RIGLESS
Event End:
Sec. Reason:
End Status:
Well Classification: DEVELOPMENT

OCCIDENTAL OF ELK HILLS INC

385X-34S

Ground Level: 843.6ft
Datum: ORIGINAL KB @ 864.60ft (default)
API No.: 0403017041

Wellbore: ORIGINAL HOLE
PBMD: 7,335.0ft
Btm TMD: 7,433.0ft
Spud Date: 12/9/2000 00:00
BH Coord X: 6,150,794.20uss ft
BH Coord Y: 2,288,657.88uss ft

Casing Shoes (ft)	Schematic (12/1/2008)	Openings Top/Btm/Type/Status

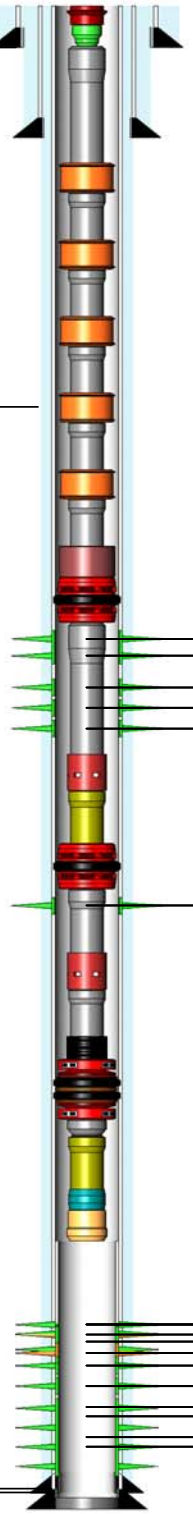

Casing Shoes (ft): 61.0, 1,091.7, 7,427.0, 7,288.2

Openings Top/Btm/Type/Status:
6,697.0ft, 6,728.0ft, PERFORATED, OPEN
6,728.0ft, 6,743.0ft, PERFORATED, OPEN
6,785.0ft, 6,800.0ft, PERFORATED, OPEN
6,808.0ft, 6,822.0ft, PERFORATED, OPEN
6,828.0ft, 6,843.0ft, PERFORATED, OPEN
6,884.0ft, 6,904.0ft, PERFORATED, OPEN
7,107.0ft, 7,124.0ft, PERFORATED, SQUEEZ
7,107.0ft, 7,124.0ft, PERFORATED, OPEN
7,140.0ft, 7,150.0ft, PERFORATED, SQUEEZ
7,140.0ft, 7,199.0ft, PERFORATED, OPEN
7,150.0ft, 7,200.0ft, PERFORATED, SQUEEZ
7,199.0ft, 7,202.0ft, PERFORATED, OPEN
7,213.0ft, 7,222.0ft, PERFORATED, SQUEEZ
7,213.0ft, 7,222.0ft, PERFORATED, OPEN
7,228.0ft, 7,230.0ft, PERFORATED, OPEN
7,230.0ft, 7,240.0ft, PERFORATED, OPEN
7,228.0ft, 7,284.0ft, PERFORATED, SQUEEZ
7,240.0ft, 7,284.0ft, PERFORATED, OPEN

TUBING STRING — Report Date: 8/11/2005 00:00

Component	Top MD (ft)	Btm MD (ft)
TH-DBB	21.0	21.8
FATNIP	21.8	22.4
TBGJNT	22.4	2,206.4
GLM-V	2,206.4	2,214.4
TBGJNT	2,214.4	3,894.0
GLM-V	3,894.0	3,902.7
TBGJNT	3,902.7	5,080.0
GLM-V	5,080.0	5,088.2
TBGJNT	5,088.2	6,007.7
GLM-V	6,007.7	6,016.3
TBGJNT	6,016.3	6,618.1
GLM-V	6,618.1	6,626.5
TBGJNT	6,626.5	6,658.0
ON-OFF	6,658.0	6,659.4
PKR-SH	6,659.4	6,664.9
TBGJNT	6,664.9	6,855.1
SS-O	6,855.1	6,859.4
PUPJNT	6,859.4	6,867.6
PKR-SH	6,867.6	6,873.1
TBGJNT	6,873.1	6,935.7
SS-O	6,935.7	6,940.0
TBGJNT	6,940.0	7,035.0
SA	7,035.0	7,039.9

PACKER ASSEMBLY (RETRIEVABLE) — Report Date: 8/11/2005 00:00

Component	Top MD (ft)	Btm MD (ft)
PKR-S	7,039.9	7,046.2
XO	7,046.2	7,046.8
PUPJNT	7,046.8	7,055.0
PNIP-O	7,055.0	7,056.4
WLREG	7,056.4	7,056.8

PLUG BACK — Report Date: 1/2/2001 00:00

Component	Top MD (ft)	Btm MD (ft)
CEMENT	7,335.0	7,433.0

CONDUCTOR CASING — Report Date: 12/7/2000 00:00

Item	OD (in)	Grade	Wt. (ppf)	TopMD (ft)	BtmMD (ft)
CASING JOINT(S)	14.000		49.70	21.0	61.0

SURFACE CASING — Report Date: 12/10/2000 00:00

Item	OD (in)	Grade	Wt. (ppf)	TopMD (ft)	BtmMD (ft)
CASING JOINT(S)	9.625	K-55	36.00	21.0	1,016.5
	9.625			1,016.5	1,016.5
CASING JOINT(S)	9.625	K-55	36.00	1,016.5	1,063.8
GUIDE SHOE	9.625			1,063.8	1,065.0

PRODUCTION CASING — Report Date: 8/4/2005 00:00

Item	OD (in)	Grade	Wt. (ppf)	TopMD (ft)	BtmMD (ft)
LINER HANGER PACKER	6.250			7,062.0	7,071.8
CASING JOINT(S)	6.250		15.30	7,071.8	7,111.5
CASING JOINT(S)	6.250		15.30	7,111.5	7,151.1
CASING JOINT(S)	6.250		15.30	7,151.1	7,190.7
CASING JOINT(S)	6.250		15.30	7,190.7	7,230.0
CASING JOINT(S)	6.250		15.30	7,230.0	7,269.7
LINER HANGER PACKER	6.250			7,269.7	7,288.2

PRODUCTION CASING — Report Date: 1/2/2001 00:00

Item	OD (in)	Grade	Wt. (ppf)	TopMD (ft)	BtmMD (ft)
CASING JOINT(S)	7.000	N-80	26.00	21.0	77.9
CASING JOINT(S)	7.000	N-80	23.00	77.9	2,838.6
CASING JOINT(S)	7.000	K-55	23.00	2,838.6	4,869.8
CASING JOINT(S)	7.000	N-80	26.00	4,869.8	5,855.6
CASING JOINT(S)	7.000	N-80	26.00	5,855.6	7,335.7
FLOAT COLLAR	7.000			7,335.7	7,337.1
CASING JOINT(S)	7.000	N-80	26.00	7,337.1	7,431.2
FLOAT SHOE	7.000			7,431.2	7,433.0

Well: 385X-34S S/T/R: 34S/30S/24E

CASING CEMENT DETAIL
- - -
Sfc Csg. Cmt Vol.: 518 cf
Hole Size: 12-1/4" (9-5/8" Casing)
Top Job: NO
Rtns to Sfc: YES
TTOC: NA
- - -

Interm Csg. Cmt Vol.: NONE
Hole Size:
Top Job:
Rtns to Sfc:
TTOC:
- - -

Prod. Csg. Cmt Vol.: 1394 cf
Hole Size: 8-3/4" (7" Casing)
Top Job: NO
Rtns to Sfc: NO
TTOC: Surface
- - -

Liner Cmt Vol.: NONE
Hole Size:
Top Job:
Rtns to Sfc:
TTOC:
- - -
Top of Formation:
UBA: 6825'
BLW: 7319'

Volume Behind Pipe:
1.3 Yield Assumed
Theoretical Calculations (TTOC)

OCCIDENTAL OF ELK HILLS INC

386-33S

Event: WELL MAINT - RIGLESS
Event End: 7/27/2007 00:00
Sec. Reason:

Ground Level: 968.0ft
Datum: ORIGINAL KB @ 977.00ft (default)
API No.: 0402927617

Wellbore: ORIGINAL HOLE
PBMD: 7,280.0ft
Btm TMD: 7,317.0ft
Spud Date: 2/3/1949 00:00
BH Coord X: 6,145,025.21uss ft
BH Coord Y: 2,288,285.92uss ft

Casing Shoes (ft) | Schematic (8/1/2007) | Openings Top/Btm/Type/Status

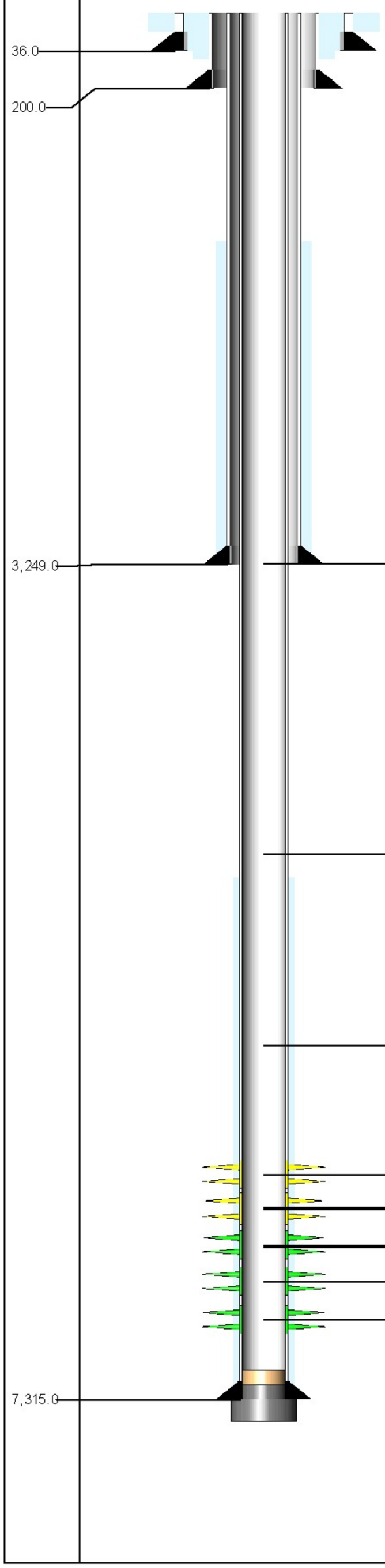

3,240.0ft, 3,241.0ft, SQZ PERFS, SQUEE
4,995.0ft, 4,996.0ft, SQZ PERFS, SQUEE
6,150.0ft, 6,151.0ft, WSO PERFS, SQUEE
6,846.0ft, 6,914.0ft, REPERFORATED, IS
6,846.0ft, 6,914.0ft, PERFORATED, ISOLA
6,936.0ft, 7,050.0ft, PERFORATED, ISOLA
6,936.0ft, 7,062.0ft, PERFORATED, ISOLA
7,082.0ft, 7,128.0ft, PERFORATED, OPEN
7,090.0ft, 7,128.0ft, PERFORATED, OPEN
7,149.0ft, 7,170.0ft, PERFORATED, OPEN
7,190.0ft, 7,250.0ft, PERFORATED, OPEN

TUBING STRING Report Date: 2/26/2004 00:00

Component	Top MD (ft)	Btm MD (ft)
TH-DBB	9.0	9.5
FATNIP	9.5	10.2
PUPJNT	10.2	28.6
TBGJNT	28.6	6,806.9
ON-OFF	6,806.9	6,808.4
PKR-S	6,808.4	6,816.3
TBGJNT	6,816.3	6,847.3
PNIP-O	6,847.3	6,848.4
TBGJNT	6,848.4	6,879.5
INJM-D	6,879.5	6,888.7
TBGJNT	6,888.7	6,920.1
PKR-S	6,920.1	6,928.0
TBGJNT	6,928.0	6,959.0
PUPJNT	6,959.0	6,965.1
PNIP-O	6,965.1	6,966.1
TBGJNT	6,966.1	6,997.6
INJM-D	6,997.6	7,006.8
TBGJNT	7,006.8	7,069.5
SA	7,069.5	7,070.5
PKR-S	7,070.5	7,074.2
PUPJNT	7,074.2	7,084.2
PNIP-O	7,084.2	7,085.3
PUPJNT	7,085.3	7,091.2
WLREG	7,091.2	7,091.6

PLUG BACK Report Date: 10/6/2004 00:00

Component	Top MD (ft)	Btm MD (ft)
FILL	7,264.0	7,280.0

PLUG BACK Report Date: 5/26/1990 00:00

Component	Top MD (ft)	Btm MD (ft)
CEMENT	7,280.0	7,315.0

PLUG BACK Report Date: 4/24/1949 00:00

Component	Top MD (ft)	Btm MD (ft)
CEMENT	7,315.0	7,317.0

CONDUCTOR CASING Report Date: 2/3/1949 00:00

Item	OD (in)	Grade	Wt. (ppf)	TopMD (ft)	BtmMD (ft)
CASING JOINT(S)	26.000			9.0	36.0

SURFACE CASING Report Date: 3/13/1949 00:00

Item	OD (in)	Grade	Wt. (ppf)	TopMD (ft)	BtmMD (ft)
CASING JOINT(S)	16.000	H-40	65.00	9.0	200.0

INTERMEDIATE CASING Report Date: 3/21/1949 00:00

Item	OD (in)	Grade	Wt. (ppf)	TopMD (ft)	BtmMD (ft)
CASING JOINT(S)	10.750	J-55	45.50	9.0	59.0
CASING JOINT(S)	10.750	J-55	40.50	59.0	2,219.0
CASING JOINT(S)	10.750	J-55	45.50	2,219.0	3,249.0

PRODUCTION CASING Report Date: 4/24/1949 00:00

Item	OD (in)	Grade	Wt. (ppf)	TopMD (ft)	BtmMD (ft)
CASING JOINT(S)	7.000	N-80	26.00	9.0	74.5
CASING JOINT(S)	7.000	N-80	23.00	74.5	1,597.7
CASING JOINT(S)	7.000	J-55	23.00	1,597.7	3,060.5
CASING JOINT(S)	7.000	N-80	23.00	3,060.5	6,301.6
CASING JOINT(S)	7.000	N-80	26.00	6,301.6	7,315.0

Well: 386-33S S/T/R: 33S/30S/24E

CASING CEMENT DETAIL
- - -
Sfc Csg. Cmt Vol.: 400 sx
Hole Size: 22"
Top Job: No
Rtns to Sfc:
TTOC: Sfc
- - -

Interm Csg. Cmt Vol.: 600 sx
Hole Size: 15"
Top Job: No
Rtns to Sfc: No
TOC: 2300' (Thermo Survey)
- - -

Prod. Csg. Cmt Vol.: 500 sx
Hole Size: 9.625"
Top Job: No
Rtns to Sfc: No
TOC: 5140' (Thermo Survey)

Liner Cmt Vol.:
Hole Size:
Top Job:
Rtns to Sfc:
TTOC:
- - -
Top of Formation:
UBA: 6839
BLW: N/A

Volume Behind Pipe:
1.3 Yield Assumed
Theoretical Calculations (TTOC)

OCCIDENTAL OF ELK HILLS INC

386-34S

Event: WELL MAINT - RIGLESS
Event End:
Sec. Reason:

Ground Elev: 821.1ft
KB to Ground: 9.9ft
Datum: ORIGINAL KB @ 831.00ft (default)
API No.: 0402927669

Wellbore: ORIGINAL HOLE
Top TMD: 9.9ft
PBMD: 7,239.0ft
Btm TMD: 7,325.0ft
Spud Date: 6/2/1951 00:00
BH Coord X: 6,150,441.75uss ft BH Coord Y: 2,288,304.18uss

Casing Shoes (ft)

Schematic (5/1/2009)

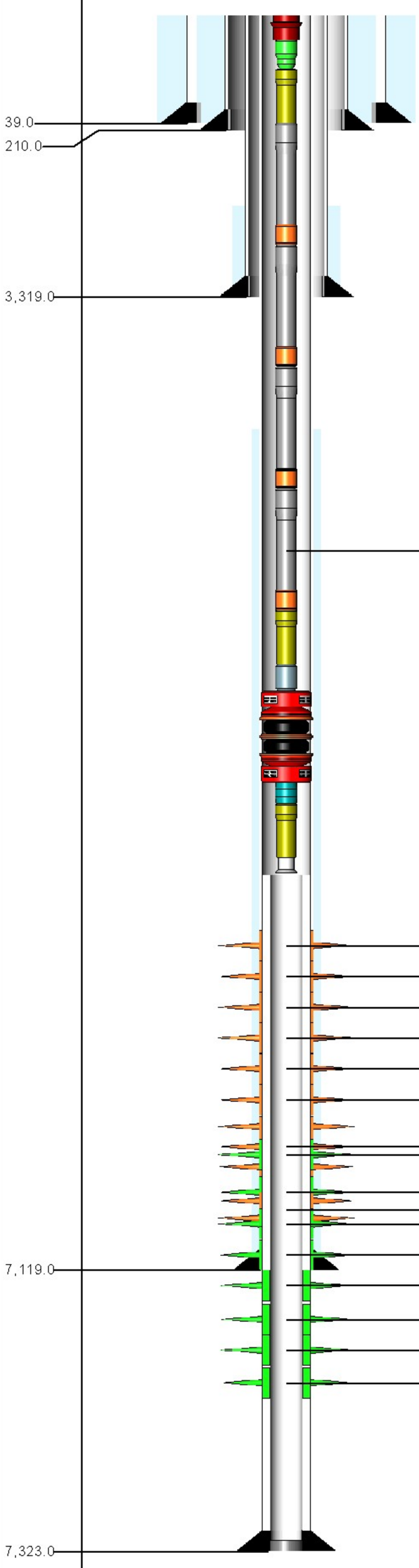

Openings Top/Btm/Type/Status

6,070.0ft, 6,071.0ft, WSO PERFS, SQUEEZ
6,666.0ft, 6,680.0ft, PERFORATED, SQUEE
6,698.0ft, 6,710.0ft, PERFORATED, SQUEE
6,726.0ft, 6,732.0ft, PERFORATED, SQUEE
6,740.0ft, 6,750.0ft, PERFORATED, SQUEE
6,761.0ft, 6,820.0ft, PERFORATED, SQUEE
6,840.0ft, 6,865.0ft, PERFORATED, SQUEE
6,890.0ft, 7,030.0ft, PERFORATED, SQUEE
6,997.0ft, 7,016.0ft, PERFORATED, OPEN
7,032.0ft, 7,048.0ft, PERFORATED, OPEN
7,040.0ft, 7,080.0ft, PERFORATED, SQUEE
7,062.0ft, 7,092.0ft, PERFORATED, OPEN
7,099.0ft, 7,119.0ft, PERFORATED, OPEN
7,122.0ft, 7,127.0ft, PERFORATED, OPEN
7,150.0ft, 7,155.0ft, PERFORATED, OPEN
7,158.0ft, 7,178.0ft, PERFORATED, OPEN
7,189.0ft, 7,209.0ft, PERFORATED, OPEN

TUBING STRING Report Date: 9/13/2006 00:00

Component	Top MD (ft)	Btm MD (ft)
TH-DBB	10.0	10.8
FATNIP	10.8	11.4
PUPJNT	11.4	30.7
CAS	30.7	2,377.2
GLM-V	2,377.2	2,385.8
CAS	2,385.8	4,202.4
GLM-V	4,202.4	4,211.0
CAS	4,211.0	5,499.8
GLM-V	5,499.8	5,508.3
CAS	5,508.3	6,419.7
GLM-V	6,419.7	6,428.2
PUPJNT	6,428.2	6,442.6
RETHD	6,442.6	6,444.4

PACKER ASSEMBLY (RETRIEVABLE) Report Date: 3/8/2006 00:00

Component	Top MD (ft)	Btm MD (ft)
PKR	6,444.4	6,453.0
PRONIP	6,453.0	6,454.2
PUPJNT	6,454.2	6,458.4
BELCOL	6,458.4	6,458.8

PLUG BACK Report Date: 9/11/2003 00:00

Component	Top MD (ft)	Btm MD (ft)
PLUGBK	7,320.0	7,323.0

CONDUCTOR CASING Report Date: 6/2/1951 00:00

Item Description	Btm MD(ft)
CASING JOINT(S) 26 in,	39.0

SURFACE CASING Report Date: 8/19/1951 00:00

Item Description	Btm MD(ft)
CASING JOINT(S) 16 in, , H-40, 65	210.0

INTERMEDIATE CASING Report Date: 8/24/1951 00:00

Item Description	Btm MD (ft)
CASING JOINT(S) 10.75 in, , J-55, 45.5	73.0
CASING JOINT(S) 10.75 in, , J-55, 40.5	2,023.0
CASING JOINT(S) 10.75 in, , J-55, 45.5	3,319.0

PRODUCTION CASING Report Date: 9/12/1951 00:00

Item Description	Btm MD (ft)
CASING JOINT(S) 7 in, , N-80, 26	52.8
CASING JOINT(S) 7 in, , N-80, 23	5,958.0
CASING JOINT(S) 7 in, , N-80, 26	7,119.0

LINER Report Date: 8/16/2003 00:00

Item Description	Btm MD (ft)
LINER HANGER 6.276 in,	6,543.3
CASING JOINT(S) 5 in, , P-110, 18	7,238.5
LANDING COLLAR 5 in,	7,238.5
CASING JOINT(S) 5 in, , P-110, 18	7,279.9
INSERT FLOAT 5 in,	7,279.9
CASING JOINT(S) 5 in, , P-110, 18	7,321.2
FLOAT SHOE 5 in,	7,323.0

Well: 386-34S S/T/R: 34S/30S/24E

CASING CEMENT DETAIL
- - -
Sfc Csg. Cmt Vol.: 559cf
Hole Size: 22"
Top Job:
Rtns to Sfc: Yes
TOC:
- - -
Int. Csg. Cmt Vol.: 690cf
Hole Size: 15"
Top Job:
Rtns to Sfc: None
TOC: TTOC @ 2163'
- - -
Prod Csg. Cmt Vol.: 650cf
Hole Size: 9-3/4"
Rtns to Sfc: none
TOC: TTOC @ 4532'
- - -
Liner Cmt Vol.: 248cf
Hole Size: 6-1/8"
Rtns to Sfc: Yes
TOC:

Top of Formation:
UBA: 6740'
BLW: 7220'

Volume Behind Pipe
1.3 Yield Assumed on
Theoretical Calculations
RLW

Event: WELL MAINT - RIG
Event End: 10/8/2008 00:00
Sec. Reason: BODY BREAK
End Status: FINISHED - SUCCESS
Well Classification: DEVELOPMENT

OCCIDENTAL OF ELK HILLS INC

386-35S

Water Depth: 719.2ft
Datum: ORIGINAL KB @ 738.20ft (default)
API No.: 0403029893

Wellbore: ST 2
PBMD: 9,968.0ft
Btm TMD: 10,075.0ft
Spud Date: 4/11/2006 20:00
BH Coord X: 6,155,848.50uss ft
BH Coord Y: 2,288,200.10uss ft

Casing Shoes (ft)	Schematic (10/8/2008)	Openings Top/Btm/Type/Status

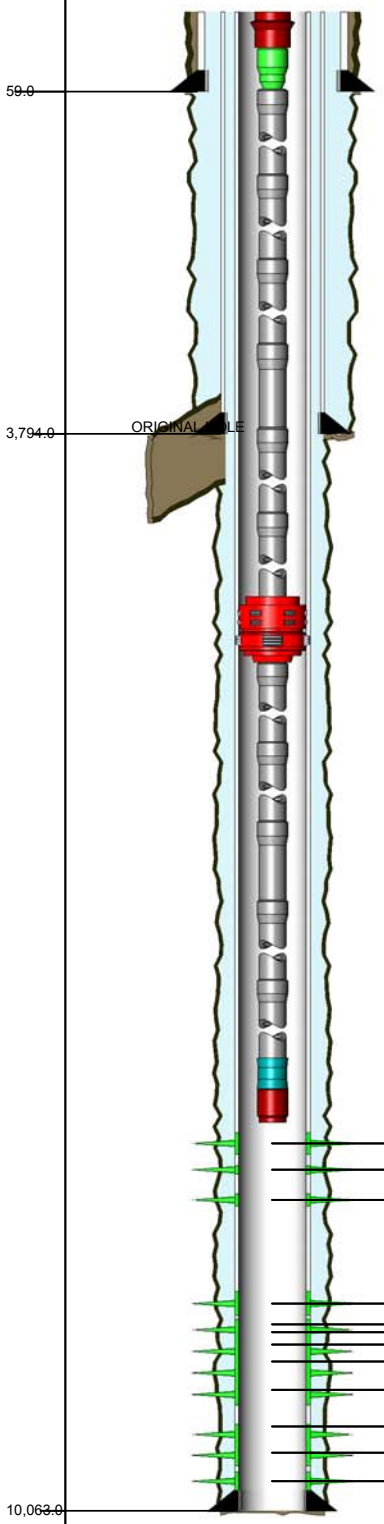

7,694.0ft, 7,830.0ft, PERFORATED, OPEN
7,900.0ft, 7,954.0ft, PERFORATED, OPEN
8,078.0ft, 8,154.0ft, PERFORATED, OPEN
8,690.0ft, 8,840.0ft, PERFORATED, OPEN
8,862.0ft, 8,928.0ft, PERFORATED, OPEN
8,930.0ft, 8,960.0ft, PERFORATED, OPEN
8,994.0ft, 9,050.0ft, PERFORATED, OPEN
9,100.0ft, 9,156.0ft, PERFORATED, OPEN
9,210.0ft, 9,402.0ft, PERFORATED, OPEN
9,520.0ft, 9,550.0ft, PERFORATED, OPEN
9,620.0ft, 9,780.0ft, PERFORATED, OPEN
9,820.0ft, 9,935.0ft, PERFORATED, OPEN

ROD STRING — Report Date: 10/8/2008 00:00

Component	Top MD (ft)	Btm MD (ft)
POLRDL	0.0	36.0
PNYROD	36.0	64.0
COROD	64.0	1,182.0
COROD	1,182.0	7,488.0
RSTBAR	7,488.0	7,492.0
ON-OFF	7,492.0	7,493.0
RSTBAR	7,493.0	7,497.0
ROD	7,497.0	7,557.0
INSPMP	7,557.0	7,587.0

TUBING STRING — Report Date: 10/7/2008 00:00

Component	Top MD (ft)	Btm MD (ft)
TH-DBB	19.0	19.7
FATNIP	19.7	20.3
CAS	20.3	6,416.9
AC	6,416.9	6,419.3
CAS	6,419.3	7,595.6
STNIP	7,595.6	7,596.7
STCOLL	7,596.7	7,628.2

CONDUCTOR CASING — Report Date: 4/4/2006 00:00

Item	OD (in)	Grade	Wt. (ppf)	TopMD (ft)	BtmMD (ft)
CASING JOINT(S)	14.000			19.0	59.0

SURFACE CASING — Report Date: 4/17/2006 00:00

Item	OD (in)	Grade	Wt. (ppf)	TopMD (ft)	BtmMD (ft)
CASING JOINT(S)	9.625	K-55	36.00	19.0	3,739.8
FLOAT COLLAR	9.625	K-55	36.00	3,739.8	3,741.5
CASING JOINT(S)	9.625	K-55	36.00	3,741.5	3,792.9
GUIDE SHOE	9.625	K-55	36.00	3,792.9	3,794.0

PRODUCTION CASING — Report Date: 7/6/2006 00:00

Item	OD (in)	Grade	Wt. (ppf)	TopMD (ft)	BtmMD (ft)
CASING JOINT(S)	7.000	N-80	26.00	19.0	7,901.4
FLAG JOINT	7.000	N-80	26.00	7,901.4	7,916.7
CASING JOINT(S)	7.000	N-80	26.00	7,916.7	9,967.7
CASING FLOAT COLLAR	7.000	N-80	26.00	9,967.7	9,969.3
CASING JOINT(S)	7.000	N-80	26.00	9,969.3	10,061.3
FLOAT SHOE	7.000	N-80	26.00	10,061.3	10,063.0

Well: 386-35S-RD2 S/T/R: 35S/30S/24E

CASING CEMENT DETAIL
- - -
Sfc Csg. Cmt Vol.: 3880 cf
Hole Size: 13.5"
Top Job: no
Rtns to Sfc: 275 bbls
TOC: sfc
- - -

Interm Csg. Cmt Vol.:
Hole Size:
Top Job:
Rtns to Sfc:
TOC:
- - -

Prod. Csg. Cmt Vol.: 3544 cf
Hole Size: 9.87"
Top Job:no
Rtns to Sfc: 75 bbls
TOC: sfc
- - -

Liner Cmt Vol.:
Hole Size:
Top Job:
Rtns to Sfc:
TTOC:
- - -
Top of Formation:
UBA: N/A
BLW: N/A

Volume Behind Pipe:
1.3 Yield Assumed
Theoretical Calculations (TTOC)

OCCIDENTAL OF ELK HILLS INC

386A-33S

Event: WELL MAINT - RIG
Event End:
Sec. Reason:
End Status: FINISHED - SUCCESS
Well Classification: DEVELOPMENT - CLASS III

Ground Level: 934.5ft
Datum: ORIGINAL KB @ 953.50ft (default)
API No.: 0403037087

Wellbore: ST1
PBMD: 8,525.0ft
Btm TMD: 9,080.0ft
Spud Date: 12/19/2008 21:00
BH Coord X: 6,142,717.24uss ft
BH Coord Y: 2,289,696.44uss ft

Casing Shoes (ft)	Schematic (8/12/2009)	Openings Top/Btm/Type/Status

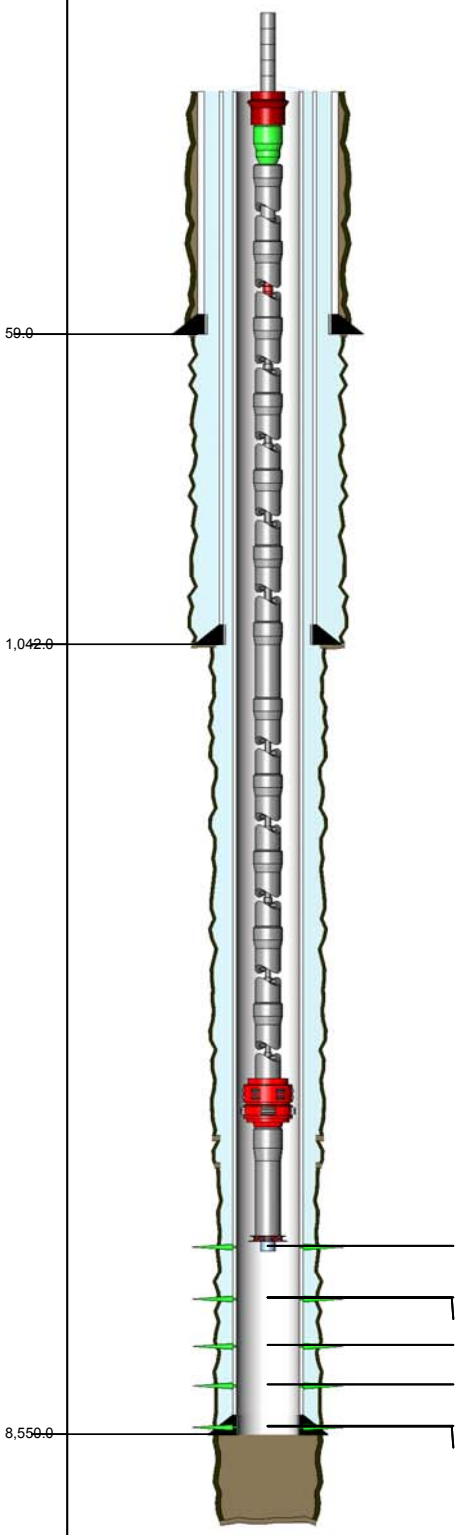

7,440.0ft, 7,441.0ft, PERFORATED, OPEN
7,728.0ft, 7,729.0ft, PERFORATED, OPEN
7,729.0ft, 7,730.0ft, PERFORATED, OPEN
8,013.0ft, 8,014.0ft, PERFORATED, OPEN
8,250.0ft, 8,251.0ft, PERFORATED, OPEN
8,500.0ft, 8,501.0ft, PERFORATED, OPEN
8,504.0ft, 8,505.0ft, PERFORATED, OPEN

ROD STRING Report Date: 6/19/2009 00:00

Component	Top MD (ft)	Btm MD (ft)
POLROD	0.0	36.0
PNYROD	36.0	40.0
PNYROD	40.0	44.0
PNYROD	44.0	52.0
PNYROD	52.0	60.0
ROD	60.0	1,320.0
ROD	1,320.0	3,540.0
ROD	3,540.0	7,410.0
RSTBAR	7,410.0	7,414.0
INSPMP	7,414.0	7,445.0

TUBING STRING Report Date: 6/18/2009 00:00

Component	Top MD (ft)	Btm MD (ft)
TH-DBB	19.0	19.7
FATNIP	19.7	20.4
CAS	20.4	5,805.0
AC	5,805.0	5,807.4
CAS	5,807.4	7,429.6
PMPSH	7,429.6	7,430.2
PERFJT	7,430.2	7,434.4
BELCOL	7,434.4	7,434.8

CONDUCTOR CASING Report Date: 11/3/2008 00:00

Item	OD (in)	Grade	Wt. (ppf)	TopMD (ft)	BtmMD (ft)
CASING JOINT(S)	14.000			19.0	59.0

SURFACE CASING Report Date: 12/20/2008 00:00

Item	OD (in)	Grade	Wt. (ppf)	TopMD (ft)	BtmMD (ft)
CASING JOINT(S)	9.625	P-110	36.00	19.0	998.6
FLOAT COLLAR	9.625		36.00	998.6	999.6
CASING JOINT(S)	9.625	P-110	36.00	999.6	1,041.0
GUIDE SHOE	9.625		36.00	1,041.0	1,042.0

PRODUCTION CASING Report Date: 1/3/2009 00:00

Item	OD (in)	Grade	Wt. (ppf)	TopMD (ft)	BtmMD (ft)
CASING JOINT(S)	7.000	P 110	26.00	19.0	5,521.3
PUP JOINT	7.000	P-110, HYDRIL 513	26.00	5,521.3	5,542.7
CASING JOINT(S)	7.000	P-110, HYDRIL 513	26.00	5,542.7	8,457.0
FLOAT COLLAR	7.000	P-110, HYDRIL 513	26.00	8,457.0	8,459.0
CASING JOINT(S)	7.000	P-110, HYDRIL 513	26.00	8,459.0	8,547.9
GUIDE SHOE	7.000	P-110, HYDRIL 513	26.00	8,547.9	8,550.0

Well: 386A-33S S/T/R: 33S/30S/24E

CASING CEMENT DETAIL
- - -
Sfc Csg. Cmt Vol.: 772 cf
Hole Size: 13.5"
Top Job: no
Rtns to Sfc: 30 bbls
TOC: sfc
- - -

Interm Csg. Cmt Vol.:
Hole Size:
Top Job:
Rtns to Sfc:
TOC:
- - -

Prod. Csg. Cmt Vol.: 2012 cf
Hole Size: 8.5"
Top Job: no
Rtns to Sfc: no
TTOC: sfc
- - -

Liner Cmt Vol.:
Hole Size:
Top Job:
Rtns to Sfc :
TTOC:
- - -
Top of Formation:
UBA: 7631'
BLW: N/A

Volume Behind Pipe:
1.3 Yield Assumed
Theoretical Calculations (TTOC)

OCCIDENTAL OF ELK HILLS INC

386B-33S

Event: DEV COMPLETION
Event End: 5/7/2009 00:00
Sec. Reason:
End Status: FINISHED - SUCCESS
Well Classification: DEVELOPMENT - CLASS III

Water Depth: 934.5ft
Datum: ORIGINAL KB @ 953.50ft (default)
API No.: 0403037088

Wellbore: ST1
PBMD: 9,481.0ft
Btm TMD: 9,573.0ft
Spud Date: 11/27/2008 12:30
BH Coord X: 6,142,446.26uss ft
BH Coord Y: 2,289,922.37uss ft

Casing Shoes (ft)	Schematic (5/7/2009)	Openings Top/Btm/Type/Status

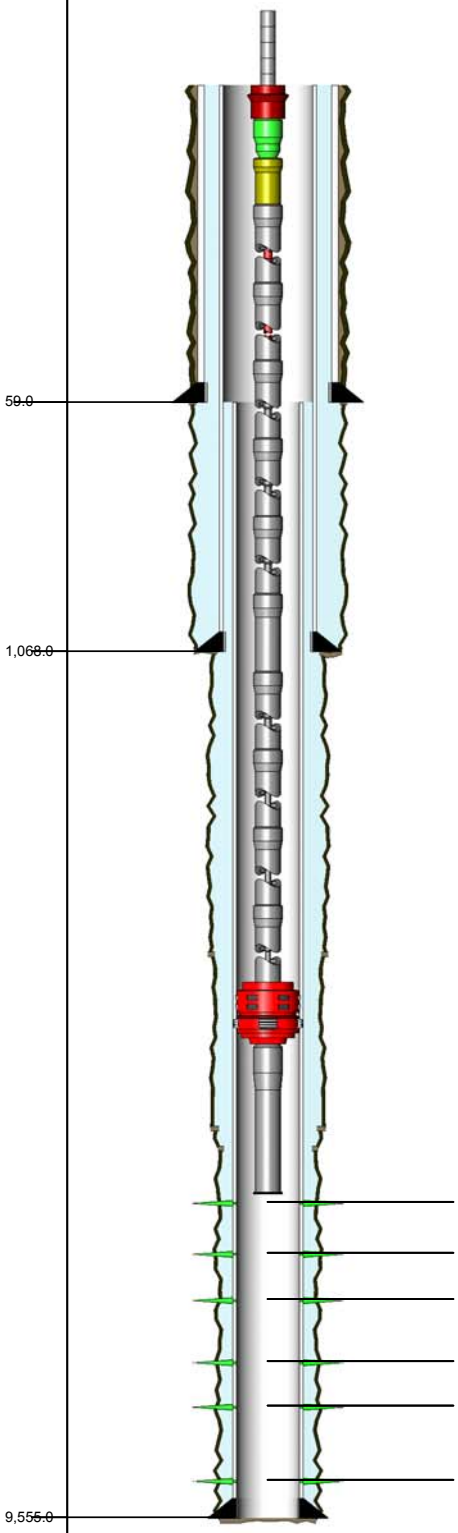

7,554.0ft, 7,555.0ft, PERFORATED, OPEN
7,877.0ft, 7,878.0ft, PERFORATED, OPEN
8,170.0ft, 8,171.0ft, PERFORATED, OPEN
8,564.0ft, 8,565.0ft, PERFORATED, OPEN
8,846.0ft, 8,847.0ft, PERFORATED, OPEN
9,316.0ft, 9,317.0ft, PERFORATED, OPEN

ROD STRING Report Date: 4/26/2009 00:00

Component	Top MD (ft)	Btm MD (ft)
POLROD	0.0	30.0
PNYROD	30.0	56.0
R-6PER	56.0	1,796.0
ROD	1,796.0	3,866.0
R-6PER	3,866.0	7,466.0
INSPMP	7,466.0	7,497.0

TUBING STRING Report Date: 4/24/2009 00:00

Component	Top MD (ft)	Btm MD (ft)
TH-DBB	19.0	19.6
FATNIP	19.6	20.3
PUPJNT	20.3	30.4
CAS	30.4	5,740.0
AC	5,740.0	5,742.3
CAS	5,742.3	7,495.5
PMPSH	7,495.5	7,496.1
PERFJT	7,496.1	7,502.2

CONDUCTOR CASING Report Date: 11/3/2008 00:00

Item	OD (in)	Grade	Wt. (ppf)	TopMD (ft)	BtmMD (ft)
CASING JOINT(S)	14.000			19.0	59.0

SURFACE CASING Report Date: 11/28/2008 00:00

Item	OD (in)	Grade	Wt. (ppf)	TopMD (ft)	BtmMD (ft)
CASING JOINT(S)	9.625	K-55	36.00	19.0	1,022.6
INSERT FLOAT	9.625	K55	36.00	1,022.6	1,022.7
CASING JOINT(S)	9.625	K-55	36.00	1,022.7	1,066.9
GUIDE SHOE	9.625	K55	36.00	1,066.9	1,068.0

PRODUCTION CASING Report Date: 12/15/2008 00:00

Item	OD (in)	Grade	Wt. (ppf)	TopMD (ft)	BtmMD (ft)
CASING JOINT(S)	7.000	P-110	26.00	59.0	150.0
PUP JOINT	7.000	P 110	26.00	150.0	164.4
CASING JOINT(S)	7.000	P-110	26.00	164.4	6,207.5
PUP JOINT	7.000	P-110	32.00	6,207.5	6,229.4
CASING JOINT(S)	7.000	P-110	26.00	6,229.4	6,315.5
CASING JOINT(S)	7.000	P-110	32.00	6,315.5	9,479.8
FLOAT COLLAR	7.000	P 110	32.00	9,479.8	9,481.8
CASING JOINT(S)	7.000	P-110	32.00	9,481.8	9,552.8
GUIDE SHOE	7.000	P 110	32.00	9,552.8	9,555.0

Well: 386B-33S S/T/R: 33S/30S/24E

CASING CEMENT DETAIL
- - -
Sfc Csg. Cmt Vol.: 792 cf
Hole Size: 13.5"
Top Job: no
Rtns to Sfc: 20 bbs
TOC: sfc
- - -

Interm Csg. Cmt Vol.:
Hole Size:
Top Job:
Rtns to Sfc:
TOC:
- - -

Prod. Csg. Cmt Vol.: 2132 cf
Hole Size: 8.5"
Top Job: no
Rtns to Sfc: good
TOC: sfc
- - -

Liner Cmt Vol.:
Hole Size:
Top Job:
Rtns to Sfc :
TTOC:
- - -
Top of Formation:
UBA: 7019'
BLW: N/A

Volume Behind Pipe:
1.3 Yield Assumed
Theoretical Calculations (TTOC)

OCCIDENTAL OF ELK HILLS INC

386X-34S

Event: WELL MAINT - RIGLESS
Event End:
Sec. Reason:

Ground Elev: 798.6ft
KB to Ground: 20.0ft
Datum: ORIGINAL KB @ 818.60ft (default)
API No.: 0403018351

Wellbore: ORIGINAL HOLE
Top TMD: 20.0ft
PBMD: 6,295.0ft
Btm TMD: 6,929.0ft
Spud Date: 5/24/2001 00:00
BH Coord X: 6,150,210.47uss ft BH Coord Y: 2,287,988.63uss

Casing Shoes (ft)

Schematic (6/1/2009)

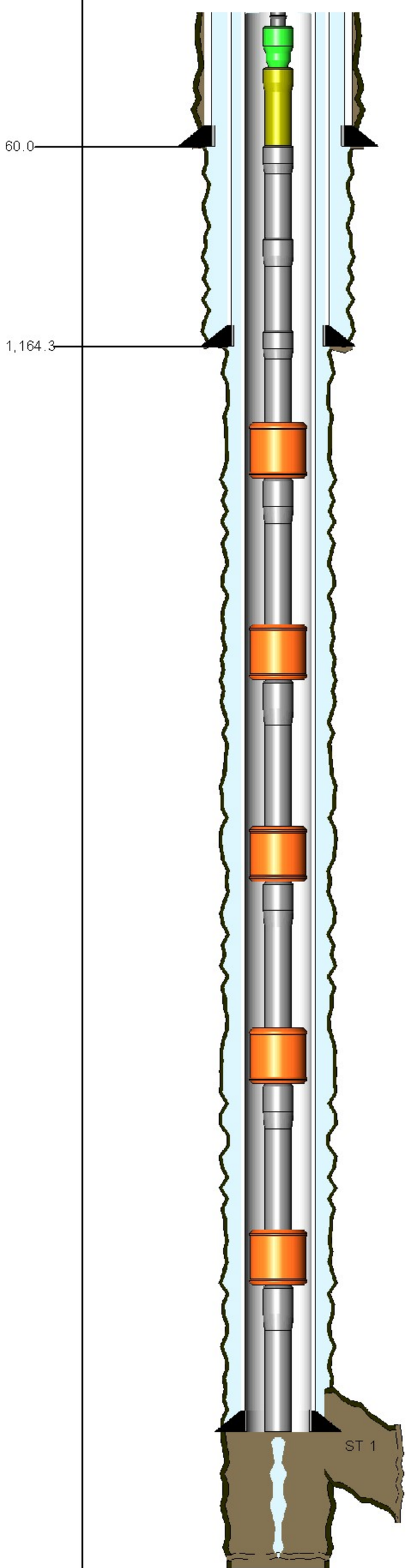

Openings Top/Btm/Type/Status

TUBING STRING Report Date: 8/21/2001 00:00

Component	Top MD (ft)	Btm MD (ft)
TH-SGL	20.0	20.6
FATNIP	20.6	22.0
PUPJNT	22.0	42.6
TBGJNT	42.6	2,283.5
GLM-V	2,283.5	2,292.3
TBGJNT	2,292.3	3,894.4
GLM-V	3,894.4	3,903.0
TBGJNT	3,903.0	4,890.3
GLM-V	4,890.3	4,899.1
TBGJNT	4,899.1	5,484.5
GLM-V	5,484.5	5,493.4
TBGJNT	5,493.4	6,017.8
GLM-V	6,017.8	6,026.6
TBGJNT	6,026.6	6,519.8
GLM-V	6,519.8	6,528.6
TBGJNT	6,528.6	6,559.4
ON-OFF	6,559.4	6,561.6
PKR-S	6,561.6	6,567.1
TBGJNT	6,567.1	6,628.8
BJ	6,628.8	6,648.9
PUPJNT	6,648.9	6,665.1
TBGJNT	6,665.1	6,696.0
BJ	6,696.0	6,706.1
TBGJNT	6,706.1	6,767.9
SS-O	6,767.9	6,772.2
PUPJNT	6,772.2	6,782.4
PKR-S	6,782.4	6,788.0
TBGJNT	6,788.0	6,940.3
SS-C	6,940.3	6,944.7
TBGJNT	6,944.7	6,975.1
LOCSUB	6,975.1	6,976.5
MSEALS	6,976.5	6,979.4
MULESH	6,979.4	6,980.0

CONDUCTOR CASING Report Date: 5/10/2001 00:00

Item Description	Btm MD(ft)
CASING JOINT(S) 14 in,	60.0

SURFACE CASING Report Date: 5/25/2001 00:00

Item Description	Btm MD(ft)
CASING JOINT(S) 9.625 in, , K-55, 36	1,116.0
INSERT FLOAT 9.625 in,	1,116.0
CASING JOINT(S) 9.625 in, , K-55, 36	1,163.2
FLOAT SHOE 9.625 in,	1,164.3

PRODUCTION CASING Report Date: 7/1/2001 00:00

Item Description	Btm MD (ft)
CASING JOINT(S) 7 in, , N-80, 26	6,511.5
FLAG JOINT 7 in, , N-80, 26	6,535.2
CASING JOINT(S) 7 in, , N-80, 26	7,242.2
FLOAT COLLAR 7 in, , N-80, 26	7,243.8
CASING JOINT(S) 7 in, , N-80, 26	7,338.3
FLOAT SHOE 7 in, , N-80, 26	7,340.0

386X-34S S/T/R: 34S/30S/24E
Last Well Status: P & A
Status Date: July 31, 2001

CASING CEMENT DETAIL
- - -
Sfc Csg. Cmt Vol.: 607cf
Hole Size: 12-1/4"
Top Job:
Rtns to Sfc: Yes
TOC:
- - -
Int. Csg. Cmt Vol.:
Hole Size:
Top Job:
Rtns to Sfc:
TOC:
- - -
Prod Csg. Cmt Vol.: 3284cf
Hole Size: 8-3/4"
Rtns to Sfc: Yes
TOC:
- - -
Liner Cmt Vol.:
Hole Size:
Rtns to Sfc:
TOC:

Top of Formation:
UBA: 6758'
BLW: 7252'

Volume Behind Pipe
1.3 Yield Assumed on
Theoretical Calculations

OCCIDENTAL OF ELK HILLS INC

386X-34S-RD1

Event: WELL MAINT - RIGLESS
Event End:
Sec. Reason:

Ground Elev: 798.6ft
KB to Ground: 6,376.0ft
Datum: ORIGINAL KB @ 818.60ft (default)
API No.: 0403018351

Wellbore: ST 1
Top TMD: 6,376.0ft
PBMD: 7,233.0ft
Btm TMD: 7,350.0ft
Spud Date: 5/24/2001 00:00
BH Coord X: 6,150,199.99uss ft BH Coord Y: 2,287,875.91uss

Casing Shoes (ft) | Schematic (6/1/2009) | Openings Top/Btm/Type/Status

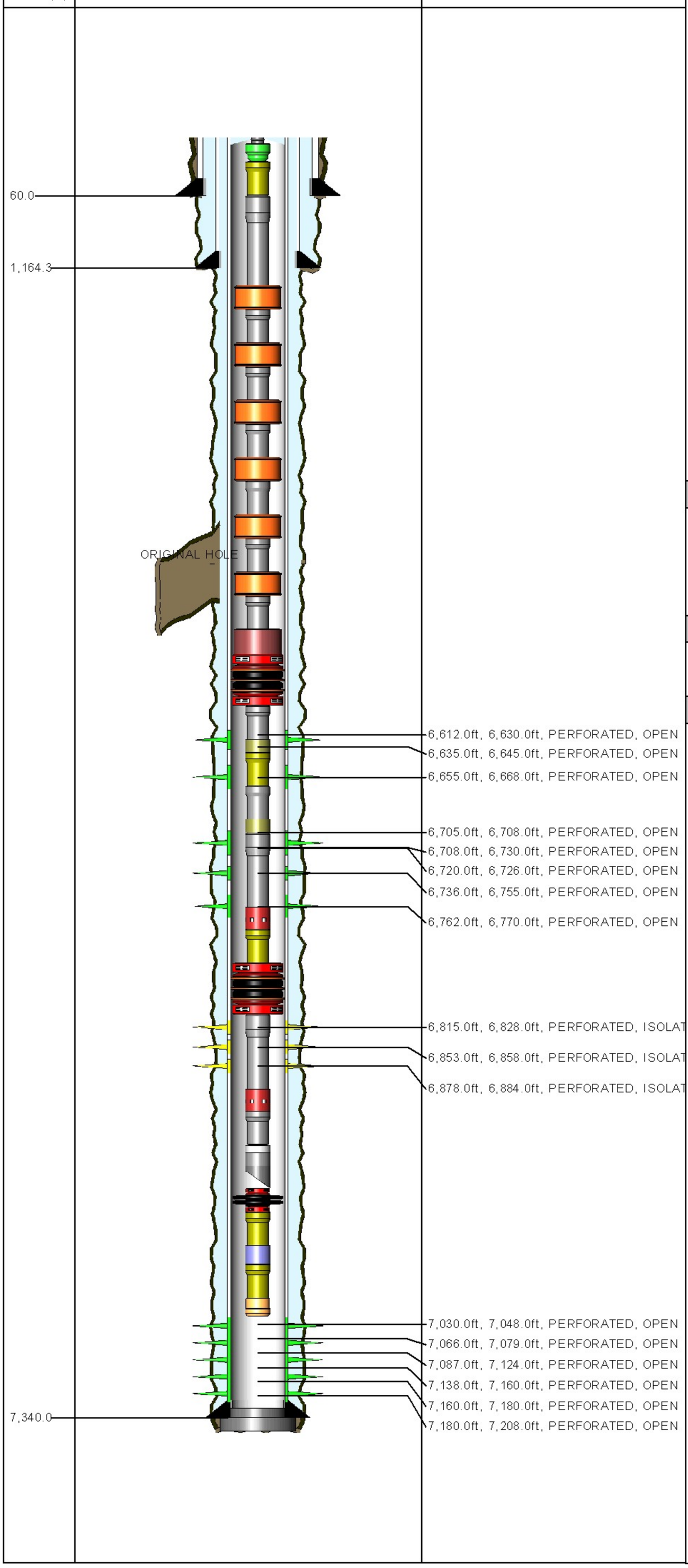

TUBING STRING Report Date: 8/21/2001 00:00

Component	Top MD (ft)	Btm MD (ft)
TH-SGL	20.0	20.6
FATNIP	20.6	22.0
PUPJNT	22.0	42.6
TBGJNT	42.6	2,283.5
GLM-V	2,283.5	2,292.3
TBGJNT	2,292.3	3,894.4
GLM-V	3,894.4	3,903.0
TBGJNT	3,903.0	4,890.3
GLM-V	4,890.3	4,899.1
TBGJNT	4,899.1	5,484.5
GLM-V	5,484.5	5,493.4
TBGJNT	5,493.4	6,017.8
GLM-V	6,017.8	6,026.6
TBGJNT	6,026.6	6,519.8
GLM-V	6,519.8	6,528.6
TBGJNT	6,528.6	6,559.4
ON-OFF	6,559.4	6,561.6
PKR-S	6,561.6	6,567.1
TBGJNT	6,567.1	6,628.8
BJ	6,628.8	6,648.9
PUPJNT	6,648.9	6,665.1
TBGJNT	6,665.1	6,696.0
BJ	6,696.0	6,706.1
TBGJNT	6,706.1	6,767.9
SS-O	6,767.9	6,772.2
PUPJNT	6,772.2	6,782.4
PKR-S	6,782.4	6,788.0
TBGJNT	6,788.0	6,940.3
SS-C	6,940.3	6,944.7
TBGJNT	6,944.7	6,975.1
LOCSUB	6,975.1	6,976.5
MSEALS	6,976.5	6,979.4
MULESH	6,979.4	6,980.0

PACKER ASSEMBLY (PERM) Report Date: 8/14/2001 00:00

Component	Top MD (ft)	Btm MD (ft)
PKR-S	6,980.0	6,986.7
PUPJNT	6,986.7	6,990.8
NOGO-O	6,990.8	6,991.8
PUPJNT	6,991.8	6,995.9
WLREG	6,995.9	6,996.3

PLUG BACK Report Date: 7/1/2001 00:00

Component	Top MD (ft)	Btm MD (ft)
CEMENT	7,233.0	7,340.0

PLUG BACK Report Date: 7/1/2001 00:00

Component	Top MD (ft)	Btm MD (ft)
CEMENT	7,340.0	7,350.0

CONDUCTOR CASING Report Date: 5/10/2001 00:00

Item Description	Btm MD(ft)
CASING JOINT(S) 14 in,	60.0

SURFACE CASING Report Date: 5/25/2001 00:00

Item Description	Btm MD(ft)
CASING JOINT(S) 9.625 in, , K-55, 36	1,116.0
INSERT FLOAT 9.625 in,	1,116.0
CASING JOINT(S) 9.625 in, , K-55, 36	1,163.2
FLOAT SHOE 9.625 in,	1,164.3

PRODUCTION CASING Report Date: 7/1/2001 00:00

Item Description	Btm MD (ft)
CASING JOINT(S) 7 in, , N-80, 26	6,511.5
FLAG JOINT 7 in, , N-80, 26	6,535.2
CASING JOINT(S) 7 in, , N-80, 26	7,242.2
FLOAT COLLAR 7 in, , N-80, 26	7,243.8
CASING JOINT(S) 7 in, , N-80, 26	7,338.3
FLOAT SHOE 7 in, , N-80, 26	7,340.0

386X-34S-RD1 S/T/R: 34S/30S/24E

CASING CEMENT DETAIL
- - -
Sfc Csg. Cmt Vol.: 607cf
Hole Size: 12-1/4"
Top Job:
Rtns to Sfc: Yes
TOC:
- - -
Int. Csg. Cmt Vol.:
Hole Size:
Top Job:
Rtns to Sfc:
TOC:
- - -
Prod Csg. Cmt Vol.: 3284cf
Hole Size: 8-3/4"
Rtns to Sfc: Yes
TOC:
- - -
Liner Cmt Vol.:
Hole Size:
Rtns to Sfc:
TOC:

Top of Formation:
UBA: 6758'
BLW: 7252'

Volume Behind Pipe
1.3 Yield Assumed on
Theoretical Calculations

OCCIDENTAL OF ELK HILLS INC

386XH-33S

Event: WELL MAINT - RIG
Event End: 8/1/2009 00:00
Sec. Reason: LOW PRODUCTION

Ground Level: 967.9ft
Datum: ORIGINAL KB @ 987.90ft (default)
API No.: 0403014864

Wellbore: ORIGINAL HOLE
PBMD: 8,476.0ft
Btm TMD: 8,482.0ft
Spud Date: 1/21/2000 00:00
BH Coord X: 6,143,931.67uss ft
BH Coord Y: 2,286,423.82uss ft

Casing Shoes (ft)	Schematic (8/1/2009)	Openings Top/Btm/Type/Status

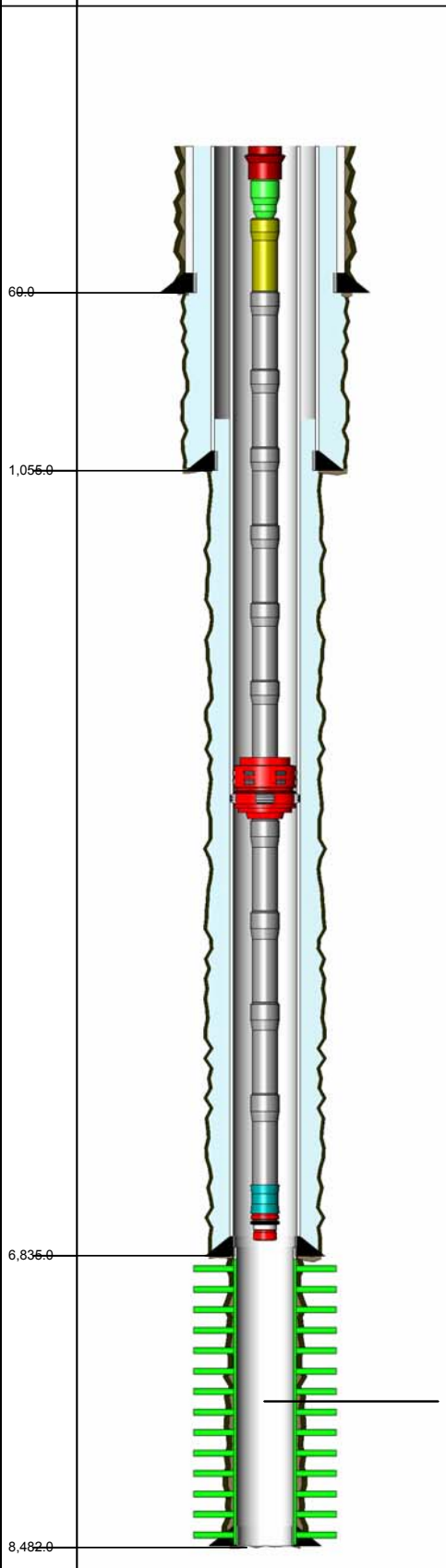

ROD STRING — Report Date: 7/31/2009 00:00

Component	Top MD (ft)	Btm MD (ft)
POLRDL	0.0	36.0
PNYROD	36.0	46.0
ROD	46.0	2,806.0
ROD	2,806.0	4,696.0
R-4PER	4,696.0	6,676.0
RSTBAR	6,676.0	6,679.0
INSPMP	6,679.0	6,703.0

TUBING STRING — Report Date: 7/30/2009 00:00

Component	Top MD (ft)	Btm MD (ft)
TH-DBB	20.0	20.8
FATNIP	20.8	21.4
PUPJNT	21.4	31.6
TBGJNT	31.6	6,019.6
AC	6,019.6	6,022.0
TBGJNT	6,022.0	6,712.3
STNIP	6,712.3	6,713.4
GASANC	6,713.4	6,744.4

CONDUCTOR CASING — Report Date: 1/21/2000 00:00

Item	OD (in)	Grade	Wt. (ppf)	TopMD (ft)	BtmMD (ft)
CASING JOINT(S)	16.000			20.0	60.0

SURFACE CASING — Report Date: 1/23/2000 00:00

Item	OD (in)	Grade	Wt. (ppf)	TopMD (ft)	BtmMD (ft)
CASING JOINT(S)	10.750	K-55	40.50	20.0	1,013.4
	10.750		40.50	1,013.4	1,013.5
CASING JOINT(S)	10.750	K-55	40.50	1,013.5	1,053.8
GUIDE SHOE	10.750		40.50	1,053.8	1,055.0

PRODUCTION CASING — Report Date: 2/10/2000 00:00

Item	OD (in)	Grade	Wt. (ppf)	TopMD (ft)	BtmMD (ft)
CASING JOINT(S)	7.000	K-55	23.00	20.0	560.0
CASING JOINT(S)	7.000	J-55	23.00	560.0	4,783.5
CASING JOINT(S)	7.000	J-55	26.00	4,783.5	5,310.5
CASING JOINT(S)	7.000	K-55	26.00	5,310.5	5,921.6
CASING JOINT(S)	7.000	S-95	26.00	5,921.6	6,301.4
CROSSOVER	7.000	S-95	26.00	6,301.4	6,337.1
CASING JOINT(S)	7.000	K-55	26.00	6,337.1	6,791.0
FLOAT COLLAR	7.000			6,791.0	6,792.5
CASING JOINT(S)	7.000	K-55	26.00	6,792.5	6,833.2
FLOAT SHOE	7.000			6,833.2	6,835.0

LINER — Report Date: 2/20/2000 00:00

Item	OD (in)	Grade	Wt. (ppf)	TopMD (ft)	BtmMD (ft)
LINER HANGER PACKER	6.375			6,782.9	6,787.6
SEALBORE EXTENSION	5.000			6,787.6	6,792.4
SLIDING SLEEVE (OPEN)	5.750			6,792.4	6,794.0
SEALBORE EXTENSION	5.000			6,794.0	6,795.5
MILLOUT EXTENSION	5.000			6,795.5	6,815.2
KOIV	6.000			6,815.2	6,817.1
CROSSOVER	5.500			6,817.1	6,817.8
CASING JOINT(S)	3.500	L-80	9.30	6,817.8	6,849.1
SLOTTED LINER	3.500	L-80	9.30	6,849.1	8,476.6
GUIDE SHOE	4.500			8,476.6	8,481.8

Well: 386XH-33S S/T/R: 33S/30S/24E

CASING CEMENT DETAIL
- - -
Sfc Csg. Cmt Vol.: 897 cf
Hole Size: 14.75"
Top Job: No
Rtns to Sfc: 11 cf
TOC: Sfc
- - -

Interm Csg. Cmt Vol.:
Hole Size:
Top Job:
Rtns to Sfc:
TOC:
- - -

Prod. Csg. Cmt Vol.: 1901 cf
Hole Size: 9.875"
Top Job: No
Rtns to Sfc: No
TTOC: 1050'

Liner Cmt Vol.: none - slotted
Hole Size: 9.75"
Top Job:
Rtns to Sfc:
TTOC:
- - -
Top of Formation:
UBA: N/A
BLW: N/A

Volume Behind Pipe:
1.3 Yield Assumed
Theoretical Calculations (TTOC)

OCCIDENTAL OF ELK HILLS INC

387-33S

Event: WELL MAINT - RIGLESS
Event End:
Sec. Reason:

Ground Level: 983.0ft
Datum: ORIGINAL KB @ 1,003.00ft (default)
API No.: 0402989734

Wellbore: ORIGINAL HOLE
PBMD: 7,385.0ft
Btm TMD: 7,545.0ft
Spud Date: 1/30/1992 00:00
BH Coord X: 6,144,997.52uss ft
BH Coord Y: 2,287,594.81uss ft

Casing Shoes (ft)	Schematic (7/30/2009)	Openings Top/Btm/Type/Status

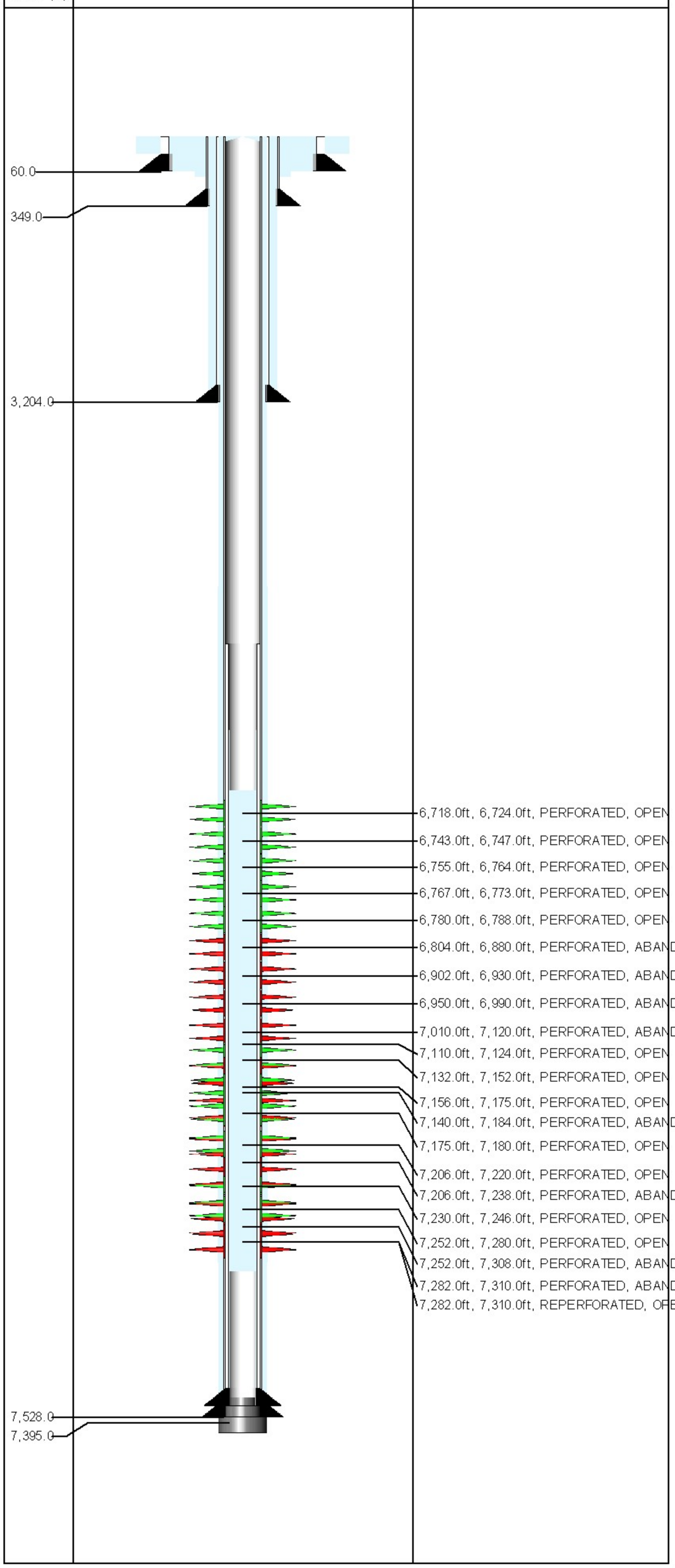

TUBING STRING Report Date: 3/22/2007 00:00

Component	Top MD (ft)	Btm MD (ft)
TH-DBB	20.0	20.6
FATNIP	20.6	21.3
PUPJNT	21.3	23.4
CAS	23.4	1,891.3
GLM	1,891.3	1,899.5
CAS	1,899.5	3,385.4
GLM	3,385.4	3,393.7
CAS	3,393.7	4,606.4
GLM	4,606.4	4,614.7
CAS	4,614.7	5,491.0
GLM	5,491.0	5,499.6
CAS	5,499.6	6,187.1
GLM	6,187.1	6,195.6
CAS	6,195.6	6,224.5
XO	6,224.5	6,225.7
CAS	6,225.7	6,630.7
XO	6,630.7	6,631.5
PUPJNT	6,631.5	6,637.6
GLM	6,637.6	6,644.2
CAS	6,644.2	6,675.3
ON-OFF	6,675.3	6,676.8
PKR-S	6,676.8	6,681.1
PUPJNT	6,681.1	6,689.1
PRONIP	6,689.1	6,690.2
WLREG	6,690.2	6,690.6

PLUG BACK Report Date: 9/6/2001 00:00

Component	Top MD (ft)	Btm MD (ft)
CEMENT	7,385.0	7,393.0

PLUG BACK Report Date: 8/25/2001 00:00

Component	Top MD (ft)	Btm MD (ft)
CEMENT	7,393.0	7,528.0

PLUG BACK Report Date: 3/5/1992 00:00

Component	Top MD (ft)	Btm MD (ft)
CEMENT	7,528.0	7,545.0

CONDUCTOR CASING Report Date: 1/30/1992 00:00

Item	OD (in)	Grade	Wt. (ppf)	TopMD (ft)	BtmMD (ft)
CASING JOINT(S)	30.000			20.0	60.0

SURFACE CASING Report Date: 2/16/1992 00:00

Item	OD (in)	Grade	Wt. (ppf)	TopMD (ft)	BtmMD (ft)
CASING JOINT(S)	13.375	H-40	48.00	20.0	349.0

INTERMEDIATE CASING Report Date: 2/21/1992 00:00

Item	OD (in)	Grade	Wt. (ppf)	TopMD (ft)	BtmMD (ft)
CASING JOINT(S)	9.625	K-55	40.00	20.0	3,204.0

PRODUCTION CASING Report Date: 3/5/1992 00:00

Item	OD (in)	Grade	Wt. (ppf)	TopMD (ft)	BtmMD (ft)
CASING JOINT(S)	7.000	N-80	26.00	20.0	515.7
CASING JOINT(S)	7.000	K-55	26.00	515.7	1,390.3
CASING JOINT(S)	7.000	K-55	23.00	1,390.3	4,720.7
CASING JOINT(S)	7.000	K-55	26.00	4,720.7	6,457.0
FLAG JOINT	7.000	N-80	26.00	6,457.0	6,482.0
CASING JOINT(S)	7.000	N-80	26.00	6,482.0	7,437.0
FLOAT COLLAR	7.000	N-80	26.00	7,437.0	7,438.9
CASING JOINT(S)	7.000	N-80	26.00	7,438.9	7,525.9
FLOAT SHOE	7.000	N-80	26.00	7,525.9	7,528.0

INNER LINER Report Date: 8/30/2001 00:00

Item	OD (in)	Grade	Wt. (ppf)	TopMD (ft)	BtmMD (ft)
LINER HANGER	6.276	N-80	15.00	6,269.0	6,276.2
LINER HANGER	6.276	N-80	15.00	6,276.2	6,282.1
CROSSOVER	6.276	N-80	15.00	6,282.1	6,284.5
CASING JOINT(S)	5.000	N-80	15.00	6,284.5	7,346.2
CASING JOINT(S)	5.000	N-80	15.00	7,346.2	7,367.8
LANDING COLLAR	5.000			7,367.8	7,368.8
FLOAT COLLAR	5.000			7,368.8	7,369.8
CASING JOINT(S)	5.000		15.00	7,369.8	7,392.4
SET SHOE	5.000			7,392.4	7,393.0

Well: 387-33S S/T/R: 33S/30S/24E

CASING CEMENT DETAIL

Sfc Csg. Cmt Vol.: 500 cf
Hole Size: 17.5"
Top Job: No
Rtns to Sfc: 10 cf
TOC: Sfc

Interm Csg. Cmt Vol.: 1550 cf
Hole Size: 12.25"
Top Job: No
Rtns to Sfc: 112 cf
TOC: Sfc

Prod. Csg. Cmt Vol.: 2150 cf
Hole Size: 8.75"
Top Job: No
Rtns to Sfc:
TTOC: Sfc

Liner Cmt Vol.:
Hole Size:
Top Job:
Rtns to Sfc:
TTOC:

Top of Formation:
UBA: 6803'
BLW: 7326'

Volume Behind Pipe:
1.3 Yield Assumed
Theoretical Calculations (TTOC)

OCCIDENTAL OF ELK HILLS INC

387H-34S

Event: WELL MAINT - RIG
Event End: 7/1/2009 00:00
Sec. Reason:

Ground Level: 887.0ft
Datum: ORIGINAL KB @ 901.00ft (default)
API No.: 0402981953

Wellbore: ORIGINAL HOLE
PBMD: 5,834.0ft
Btm TMD: 7,750.0ft
Spud Date: 2/16/1988 00:00
BH Coord X: 6,150,525.70uss ft
BH Coord Y: 2,287,585.42uss ft

Casing Shoes (ft) | Schematic (8/1/2009) | Openings Top/Btm/Type/Status

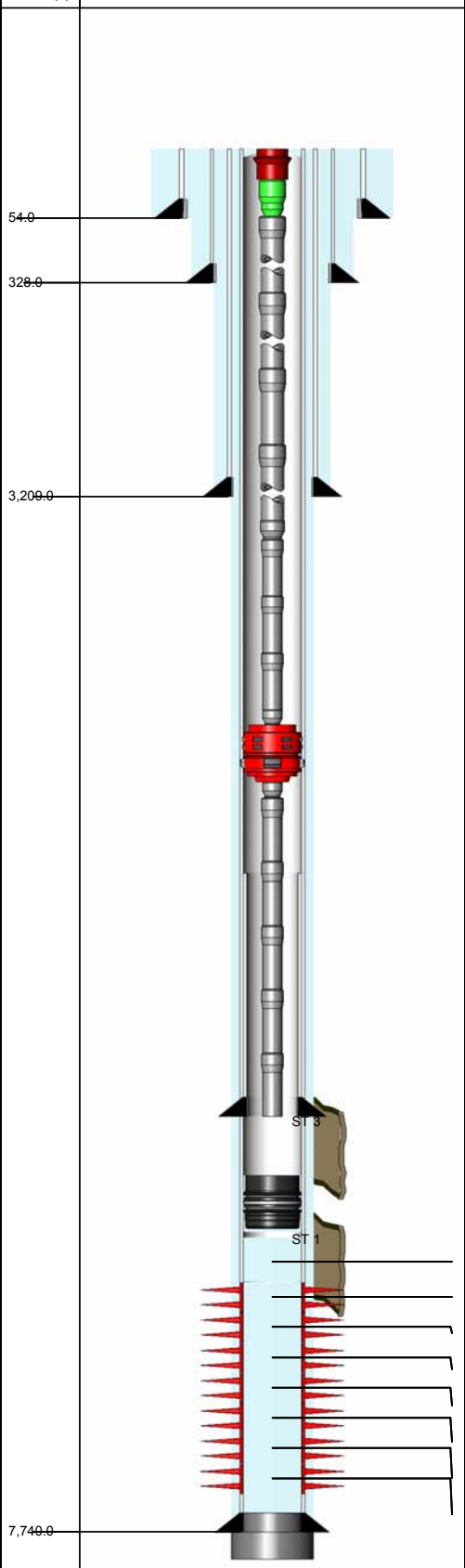

6,170.0ft, 6,171.0ft, WSO PERFS, ABANDONED
6,845.0ft, 6,900.0ft, PERFORATED, ABANDONE
6,920.0ft, 6,943.0ft, PERFORATED, ABANDONE
6,980.0ft, 7,050.0ft, PERFORATED, ABANDONE
7,070.0ft, 7,105.0ft, PERFORATED, ABANDONE
7,125.0ft, 7,173.0ft, PERFORATED, ABANDONE
7,192.0ft, 7,240.0ft, PERFORATED, ABANDONE
7,258.0ft, 7,323.0ft, PERFORATED, ABANDONE

ROD STRING — Report Date: 7/9/2009 00:00

Component	Top MD (ft)	Btm MD (ft)
POLRDL	0.0	30.0
PNYROD	30.0	50.0
COROD	50.0	1,287.0
COROD	1,287.0	6,003.0
RSTBAR	6,003.0	6,007.0
ON-OFF	6,007.0	6,008.0
RSTBAR	6,008.0	6,012.0
ROD	6,012.0	6,072.0
INSPMP	6,072.0	6,090.0

TUBING STRING — Report Date: 7/8/2009 00:00

Component	Top MD (ft)	Btm MD (ft)
TH-DBB	14.0	14.7
FATNIP	14.7	15.4
CAS	15.4	3,622.4
XO	3,622.4	3,623.5
TBGJNT	3,623.5	5,621.4
XO	5,621.4	5,622.5
AC	5,622.5	5,624.9
XO	5,624.9	5,626.0
TBGJNT	5,626.0	6,101.5
STNIP	6,101.5	6,102.6

PACKER ASSEMBLY (PERMANENT) — Report Date: 6/26/2003 00:00

Component	Top MD (ft)	Btm MD (ft)
CR-PRM	5,682.0	5,688.0

PLUG BACK — Report Date: 7/9/1988 00:00

Component	Top MD (ft)	Btm MD (ft)
CEMENT	7,651.0	7,740.0

PLUG BACK — Report Date: 3/18/1988 00:00

Component	Top MD (ft)	Btm MD (ft)
CEMENT	7,740.0	7,750.0

CONDUCTOR CASING — Report Date: 2/16/1988 00:00

Item	OD (in)	Grade	Wt. (ppf)	TopMD (ft)	BtmMD (ft)
CASING JOINT(S)	20.000			14.0	54.0

SURFACE CASING — Report Date: 2/24/1988 00:00

Item	OD (in)	Grade	Wt. (ppf)	TopMD (ft)	BtmMD (ft)
CASING JOINT(S)	13.325	H-40	48.00	14.0	327.2
GUIDE SHOE	13.325			327.2	328.0

INTERMEDIATE CASING — Report Date: 3/1/1988 00:00

Item	OD (in)	Grade	Wt. (ppf)	TopMD (ft)	BtmMD (ft)
CASING JOINT(S)	9.625	K-55	40.00	14.0	3,208.0
GUIDE SHOE	9.625			3,208.0	3,209.0

PRODUCTION CASING — Report Date: 3/18/1988 00:00

Item	OD (in)	Grade	Wt. (ppf)	TopMD (ft)	BtmMD (ft)
CASING JOINT(S)	7.000	N-80	26.00	14.0	78.6
CASING JOINT(S)	7.000	K-55	26.00	78.6	5,140.9
CASING JOINT(S)	7.000	K-55	26.00	5,140.9	6,111.7
FLAG JOINT	7.000	K-55	26.00	6,111.7	6,128.1
CASING JOINT(S)	7.000	K-55	26.00	6,128.1	7,041.4
CASING JOINT(S)	7.000	N-80	26.00	7,041.4	7,690.6
FLOAT COLLAR	7.000	N-80	26.00	7,690.6	7,692.6
CASING JOINT(S)	7.000	N-80	26.00	7,692.6	7,738.0
FLOAT SHOE	7.000	N-80	26.00	7,738.0	7,740.0

LINER — Report Date: 7/24/2002 00:00

Item	OD (in)	Grade	Wt. (ppf)	TopMD (ft)	BtmMD (ft)
LINER HANGER PACKER	5.500	N-80	26.00	5,646.0	5,652.3
CROSSOVER	5.500	N-80		5,652.3	5,653.1
CASING JOINT(S)	5.000	N-80	15.00	5,653.1	6,110.3
CROSSOVER	5.000	N-80	15.00	6,110.3	6,111.3
TUBING JOINT(S)	3.500	N-80	9.30	6,111.3	6,487.2
SLOTTED LINER	3.500	N-80	9.30	6,487.2	8,324.6
GUIDE SHOE	3.500			8,324.6	8,325.0

Well: 387H-34S S/T/R: 34/30S/24E
Last Well Status: P & A
Status Date: Jan 20 2000

CASING CEMENT DETAIL
- - -
Sfc Csg. Cmt Vol.: 425 cf
Hole Size: 17.5
Top Job: no
Rtns to Sfc: 45 cf
TOC: sfc
- - -

Interm Csg. Cmt Vol.: 1450 cf
Hole Size: 12.5
Top Job: no
Rtns to Sfc: no
TTOC: sfc
- - -

Prod. Csg. Cmt Vol.: 1500 cf
Hole Size: 8.75
Top Job: no
Rtns to Sfc: no
TTOC: sfc

Liner Cmt Vol.:
Hole Size:
Top Job:
Rtns to Sfc:
TOC:
- - -
Top of Formation:
UBA: 6822'
BLW: 7326'

Volume Behind Pipe:
1.3 Yield Assumed
Theoretical Calculations (TTOC)
JEP

OCCIDENTAL OF ELK HILLS INC

387H-34S-RD1

Event: WELL MAINT - RIG
Event End: 7/1/2009 00:00
Sec. Reason:

Ground Level: 887.0ft
Datum: ORIGINAL KB @ 901.00ft (default)
API No.: 0402981953

Wellbore: ST 1
PBMD: 6,081.0ft
Btm TMD: 7,521.0ft
Spud Date: 2/16/1988 00:00
BH Coord X: 6,150,427.19uss ft
BH Coord Y: 2,287,572.22uss ft

Casing Shoes (ft) | Schematic (8/1/2009) | Openings Top/Btm/Type/Status

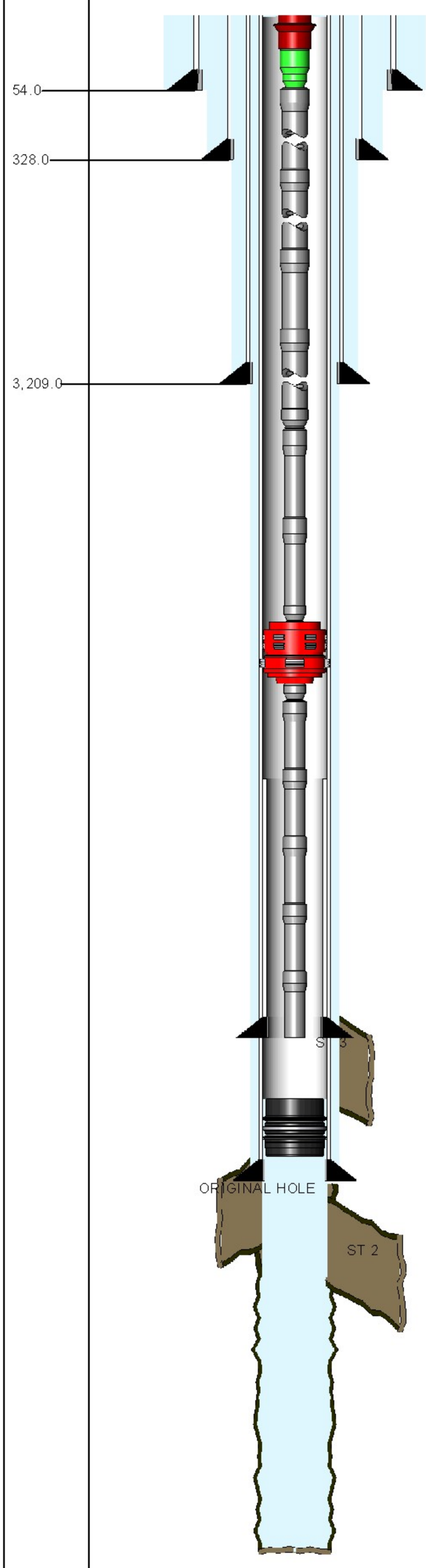

ROD STRING Report Date: 7/9/2009 00:00

Component	Top MD (ft)	Btm MD (ft)
POLRDL	0.0	30.0
PNYROD	30.0	50.0
COROD	50.0	1,287.0
COROD	1,287.0	6,003.0
RSTBAR	6,003.0	6,007.0
ON-OFF	6,007.0	6,008.0
RSTBAR	6,008.0	6,012.0
ROD	6,012.0	6,072.0
INSPMP	6,072.0	6,090.0

TUBING STRING Report Date: 7/8/2009 00:00

Component	Top MD (ft)	Btm MD (ft)
TH-DBB	14.0	14.7
FATNIP	14.7	15.4
CAS	15.4	3,622.4
XO	3,622.4	3,623.5
TBGJNT	3,623.5	5,621.4
XO	5,621.4	5,622.5
AC	5,622.5	5,624.9
XO	5,624.9	5,626.0
TBGJNT	5,626.0	6,101.5
STNIP	6,101.5	6,102.6

PACKER ASSEMBLY (PERMANENT) Report Date: 6/26/2002 00:00

Component	Top MD (ft)	Btm MD (ft)
CR-PRM	5,682.0	5,688.0

CONDUCTOR CASING Report Date: 2/16/1988 00:00

Item	OD (in)	Grade	Wt. (ppf)	TopMD (ft)	BtmMD (ft)
CASING JOINT(S)	20.000			14.0	54.0

SURFACE CASING Report Date: 2/24/1988 00:00

Item	OD (in)	Grade	Wt. (ppf)	TopMD (ft)	BtmMD (ft)
CASING JOINT(S)	13.325	H-40	48.00	14.0	327.2
GUIDE SHOE	13.325			327.2	328.0

INTERMEDIATE CASING Report Date: 3/1/1988 00:00

Item	OD (in)	Grade	Wt. (ppf)	TopMD (ft)	BtmMD (ft)
CASING JOINT(S)	9.625	K-55	40.00	14.0	3,208.0
GUIDE SHOE	9.625			3,208.0	3,209.0

PRODUCTION CASING Report Date: 3/18/1988 00:00

Item	OD (in)	Grade	Wt. (ppf)	TopMD (ft)	BtmMD (ft)
CASING JOINT(S)	7.000	N-80	26.00	14.0	78.6
CASING JOINT(S)	7.000	K-55	26.00	78.6	5,140.9
CASING JOINT(S)	7.000	K-55	26.00	5,140.9	6,111.7
FLAG JOINT	7.000	K-55	26.00	6,111.7	6,128.1
CASING JOINT(S)	7.000	K-55	26.00	6,128.1	7,041.4
CASING JOINT(S)	7.000	N-80	26.00	7,041.4	7,690.6
FLOAT COLLAR	7.000	N-80	26.00	7,690.6	7,692.6
CASING JOINT(S)	7.000	N-80	26.00	7,692.6	7,738.0
FLOAT SHOE	7.000	N-80	26.00	7,738.0	7,740.0

LINER Report Date: 7/24/2002 00:00

Item	OD (in)	Grade	Wt. (ppf)	TopMD (ft)	BtmMD (ft)
LINER HANGER PACKER	6.276	N-80	26.00	5,646.0	5,652.3
CROSSOVER	5.500	N-80		5,652.3	5,653.1
CASING JOINT(S)	5.000	N-80	15.00	5,653.1	6,110.3
CROSSOVER	5.000	N-80	15.00	6,110.3	6,111.3
TUBING JOINT(S)	3.500	N-80	9.30	6,111.3	6,487.2
SLOTTED LINER	3.500	N-80	9.30	6,487.2	8,324.6
GUIDE SHOE	3.500			8,324.6	8,325.0

Well: 387H-34S-RD1 S/T/R: 34/30S/24E
Last Well Status: P & A
Status Date: Feb 20 2000

CASING CEMENT DETAIL
- - -
Sfc Csg. Cmt Vol.: 425 cf
Hole Size: 17.5
Top Job: no
Rtns to Sfc: 45 cf
TOC: sfc
- - -

Interm Csg. Cmt Vol.: 1450 cf
Hole Size: 12.5
Top Job: no
Rtns to Sfc: no
TTOC: sfc
- - -

Prod. Csg. Cmt Vol.: 1500 cf
Hole Size: 8.75
Top Job: no
Rtns to Sfc: no
TTOC: sfc

Liner Cmt Vol.:
Hole Size:
Top Job:
Rtns to Sfc:
TOC:
- - -
Top of Formation:
UBA: 6820'
BLW: 7319'

Volume Behind Pipe:
1.3 Yield Assumed
Theoretical Calculations (TTOC)
JEP

OCCIDENTAL OF ELK HILLS INC

387H-34S

Event: WELL MAINT - RIG
Event End: 7/1/2009 00:00
Sec. Reason:

Ground Level: 887.0ft
Datum: ORIGINAL KB @ 901.00ft (default)
API No.: 0402981953

Wellbore: ST 2
PBMD: 8,053.0ft
Btm TMD: 8,074.0ft
Spud Date: 2/16/1988 00:00
BH Coord X: 6,148,577.32uss ft
BH Coord Y: 2,287,401.97uss ft

Casing Shoes (ft) | Schematic (8/1/2009) | Openings Top/Btm/Type/Status

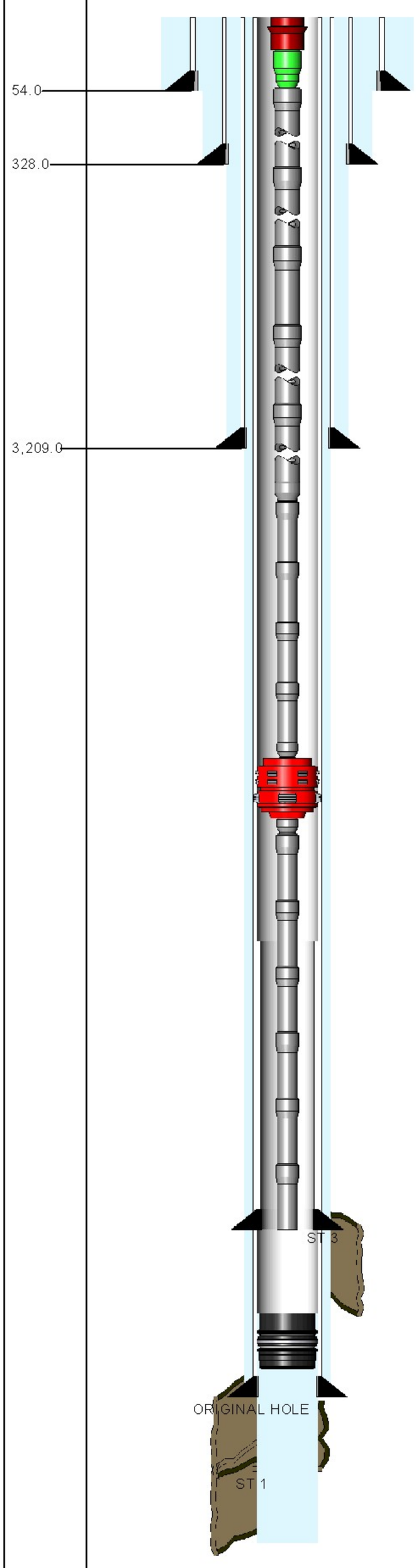

PACKER ASSEMBLY (PERMANENT) Report Date: 6/26/2002 00:00

Component	Top MD (ft)	Btm MD (ft)
CR-PRM	5,682.0	5,688.0

ROD STRING Report Date: 7/9/2009 00:00

Component	Top MD (ft)	Btm MD (ft)
POLRDL	0.0	30.0
PNYROD	30.0	50.0
COROD	50.0	1,287.0
COROD	1,287.0	6,003.0
RSTBAR	6,003.0	6,007.0
ON-OFF	6,007.0	6,008.0
RSTBAR	6,008.0	6,012.0
ROD	6,012.0	6,072.0
INSPMP	6,072.0	6,090.0

TUBING STRING Report Date: 7/8/2009 00:00

Component	Top MD (ft)	Btm MD (ft)
TH-DBB	14.0	14.7
FATNIP	14.7	15.4
CAS	15.4	3,622.4
XO	3,622.4	3,623.5
TBGJNT	3,623.5	5,621.4
XO	5,621.4	5,622.5
AC	5,622.5	5,624.9
XO	5,624.9	5,626.0
TBGJNT	5,626.0	6,101.5
STNIP	6,101.5	6,102.6

CONDUCTOR CASING Report Date: 2/16/1988 00:00

Item	OD (in)	Grade	Wt. (ppf)	TopMD (ft)	BtmMD (ft)
CASING JOINT(S)	20.000			14.0	54.0

SURFACE CASING Report Date: 2/24/1988 00:00

Item	OD (in)	Grade	Wt. (ppf)	TopMD (ft)	BtmMD (ft)
CASING JOINT(S)	13.325	H-40	48.00	14.0	327.2
GUIDE SHOE	13.325			327.2	328.0

INTERMEDIATE CASING Report Date: 3/1/1988 00:00

Item	OD (in)	Grade	Wt. (ppf)	TopMD (ft)	BtmMD (ft)
CASING JOINT(S)	9.625	K-55	40.00	14.0	3,208.0
GUIDE SHOE	9.625			3,208.0	3,209.0

PRODUCTION CASING Report Date: 3/18/1988 00:00

Item	OD (in)	Grade	Wt. (ppf)	TopMD (ft)	BtmMD (ft)
CASING JOINT(S)	7.000	N-80	26.00	14.0	78.6
CASING JOINT(S)	7.000	K-55	26.00	78.6	5,140.9
CASING JOINT(S)	7.000	K-55	26.00	5,140.9	6,111.7
FLAG JOINT	7.000	K-55	26.00	6,111.7	6,128.1
CASING JOINT(S)	7.000	K-55	26.00	6,128.1	7,041.4
CASING JOINT(S)	7.000	N-80	26.00	7,041.4	7,690.6
FLOAT COLLAR	7.000	N-80	26.00	7,690.6	7,692.6
CASING JOINT(S)	7.000	N-80	26.00	7,692.6	7,738.0
FLOAT SHOE	7.000	N-80	26.00	7,738.0	7,740.0

LINER Report Date: 7/24/2002 00:00

Item	OD (in)	Grade	Wt. (ppf)	TopMD (ft)	BtmMD (ft)
LINER HANGER PACKER	6.276	N-80	26.00	5,646.0	5,652.3
CROSSOVER	5.500	N-80		5,652.3	5,653.1
CASING JOINT(S)	5.000	N-80	15.00	5,653.1	6,110.3
CROSSOVER	5.000	N-80	15.00	6,110.3	6,111.3
TUBING JOINT(S)	3.500	N-80	9.30	6,111.3	6,487.2
SLOTTED LINER	3.500	N-80	9.30	6,487.2	8,324.6
GUIDE SHOE	3.500			8,324.6	8,325.0

Well: 387H-34S-RD2 S/T/R: 34S/30S/24E

CASING CEMENT DETAIL
- - -
Sfc Csg. Cmt Vol.: 425 cf
Hole Size: 17.5"
Top Job: No
Rtns to Sfc: 45 cf
TOC: Sfc
- - -

Interm Csg. Cmt Vol.: 1450 cf
Hole Size: 12.25"
Top Job: No
Rtns to Sfc:
TTOC: Sfc
- - -

Prod. Csg. Cmt Vol.: 1500 cf
Hole Size: 8.75"
Top Job: No
Rtns to Sfc:
TTOC: Sfc
- - -

Liner Cmt Vol.:
Hole Size:
Top Job:
Rtns to Sfc:
TTOC:
- - -
Top of Formation:
UBA: 6820'
BLW: 7319'

Volume Behind Pipe:
1.3 Yield Assumed
Theoretical Calculations (TTOC)

OCCIDENTAL OF ELK HILLS INC

387H-34S-RD3

Event: WELL MAINT - RIG
Event End: 7/1/2009 00:00
Sec. Reason:

Ground Level: 887.0ft
Datum: ORIGINAL KB @ 901.00ft (default)
API No.: 0402981953

Wellbore: ST 3
PBMD: 8,325.0ft
Btm TMD: 8,325.0ft
Spud Date: 2/16/1988 00:00
BH Coord X: 6,148,439.10uss ft
BH Coord Y: 2,288,339.79uss ft

Casing Shoes (ft) | Schematic (8/1/2009) | Openings Top/Btm/Type/Status

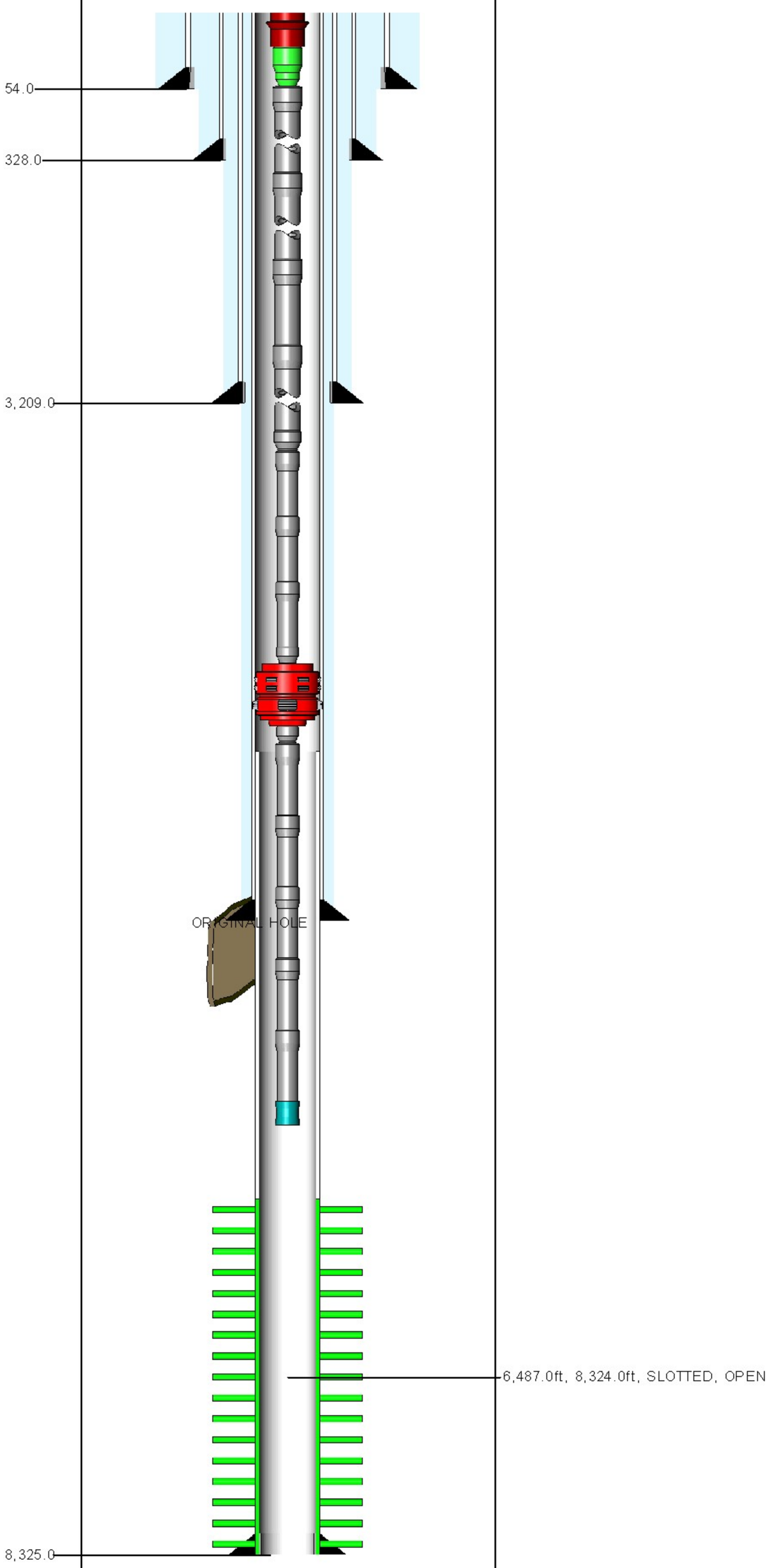

ROD STRING Report Date: 7/9/2009 00:00

Component	Top MD (ft)	Btm MD (ft)
POLRDL	0.0	30.0
PNYROD	30.0	50.0
COROD	50.0	1,287.0
COROD	1,287.0	6,003.0
RSTBAR	6,003.0	6,007.0
ON-OFF	6,007.0	6,008.0
RSTBAR	6,008.0	6,012.0
ROD	6,012.0	6,072.0
INSPMP	6,072.0	6,090.0

TUBING STRING Report Date: 7/8/2009 00:00

Component	Top MD (ft)	Btm MD (ft)
TH-DBB	14.0	14.7
FATNIP	14.7	15.4
CAS	15.4	3,622.4
XO	3,622.4	3,623.5
TBGJNT	3,623.5	5,621.4
XO	5,621.4	5,622.5
AC	5,622.5	5,624.9
XO	5,624.9	5,626.0
TBGJNT	5,626.0	6,101.5
STNIP	6,101.5	6,102.6

CONDUCTOR CASING Report Date: 2/16/1988 00:00

Item	OD (in)	Grade	Wt. (ppf)	TopMD (ft)	BtmMD (ft)
CASING JOINT(S)	20.000			14.0	54.0

SURFACE CASING Report Date: 2/24/1988 00:00

Item	OD (in)	Grade	Wt. (ppf)	TopMD (ft)	BtmMD (ft)
CASING JOINT(S)	13.325	H-40	48.00	14.0	327.2
GUIDE SHOE	13.325			327.2	328.0

INTERMEDIATE CASING Report Date: 3/1/1988 00:00

Item	OD (in)	Grade	Wt. (ppf)	TopMD (ft)	BtmMD (ft)
CASING JOINT(S)	9.625	K-55	40.00	14.0	3,208.0
GUIDE SHOE	9.625			3,208.0	3,209.0

PRODUCTION CASING Report Date: 3/18/1988 00:00

Item	OD (in)	Grade	Wt. (ppf)	TopMD (ft)	BtmMD (ft)
CASING JOINT(S)	7.000	N-80	26.00	14.0	78.6
CASING JOINT(S)	7.000	K-55	26.00	78.6	5,140.9
CASING JOINT(S)	7.000	K-55	26.00	5,140.9	6,111.7
FLAG JOINT	7.000	K-55	26.00	6,111.7	6,128.1
CASING JOINT(S)	7.000	K-55	26.00	6,128.1	7,041.4
CASING JOINT(S)	7.000	N-80	26.00	7,041.4	7,690.6
FLOAT COLLAR	7.000	N-80	26.00	7,690.6	7,692.6
CASING JOINT(S)	7.000	N-80	26.00	7,692.6	7,738.0
FLOAT SHOE	7.000	N-80	26.00	7,738.0	7,740.0

LINER Report Date: 7/24/2002 00:00

Item	OD (in)	Grade	Wt. (ppf)	TopMD (ft)	BtmMD (ft)
LINER HANGER PACKER	6.276	N-80	26.00	5,646.0	5,652.3
CROSSOVER	5.500	N-80		5,652.3	5,653.1
CASING JOINT(S)	5.000	N-80	15.00	5,653.1	6,110.3
CROSSOVER	5.000	N-80	15.00	6,110.3	6,111.3
TUBING JOINT(S)	3.500	N-80	9.30	6,111.3	6,487.2
SLOTTED LINER	3.500	N-80	9.30	6,487.2	8,324.6
GUIDE SHOE	3.500			8,324.6	8,325.0

Well: 387H-34S-RD3 S/T/R: 34/30S/24E

CASING CEMENT DETAIL
- - -
Sfc Csg. Cmt Vol.: 425 cf
Hole Size: 17.5
Top Job: no
Rtns to Sfc: 45 cf
TOC: sfc
- - -

Interm Csg. Cmt Vol.: 1450 cf
Hole Size: 12.5
Top Job: no
Rtns to Sfc: no
TTOC: sfc
- - -

Prod. Csg. Cmt Vol.: 1500 cf
Hole Size: 8.75
Top Job: no
Rtns to Sfc: no
TTOC: sfc

Liner Cmt Vol.: none - Slotted liner
Hole Size:
Top Job:
Rtns to Sfc:
TOC:
- - -
Top of Formation:
UBA: 6820'
BLW: 7319'

Volume Behind Pipe:
1.3 Yield Assumed
Theoretical Calculations (TTOC)
JEP

OCCIDENTAL OF ELK HILLS INC

387X-33S

Event: WELL MAINT - RIG
Event End: 4/7/2007 00:00
Sec. Reason: LOW PRODUCTION

Water Depth: 983.3 ft
Datum: ORIGINAL KB @ 1,006.30 ft (default)
API No.: 0403030335

Wellbore: ORIGINAL HOLE
PBMD: 8,880.0 ft
Btm TMD: 8,924.0 ft
Spud Date: 6/22/2006 16:00
BH Coord X: 6,148,093.07 uss ft
BH Coord Y: 2,287,925.77 uss ft

Casing Shoes (ft)	Schematic (4/7/2007)	Openings Top/Btm/Type/Status

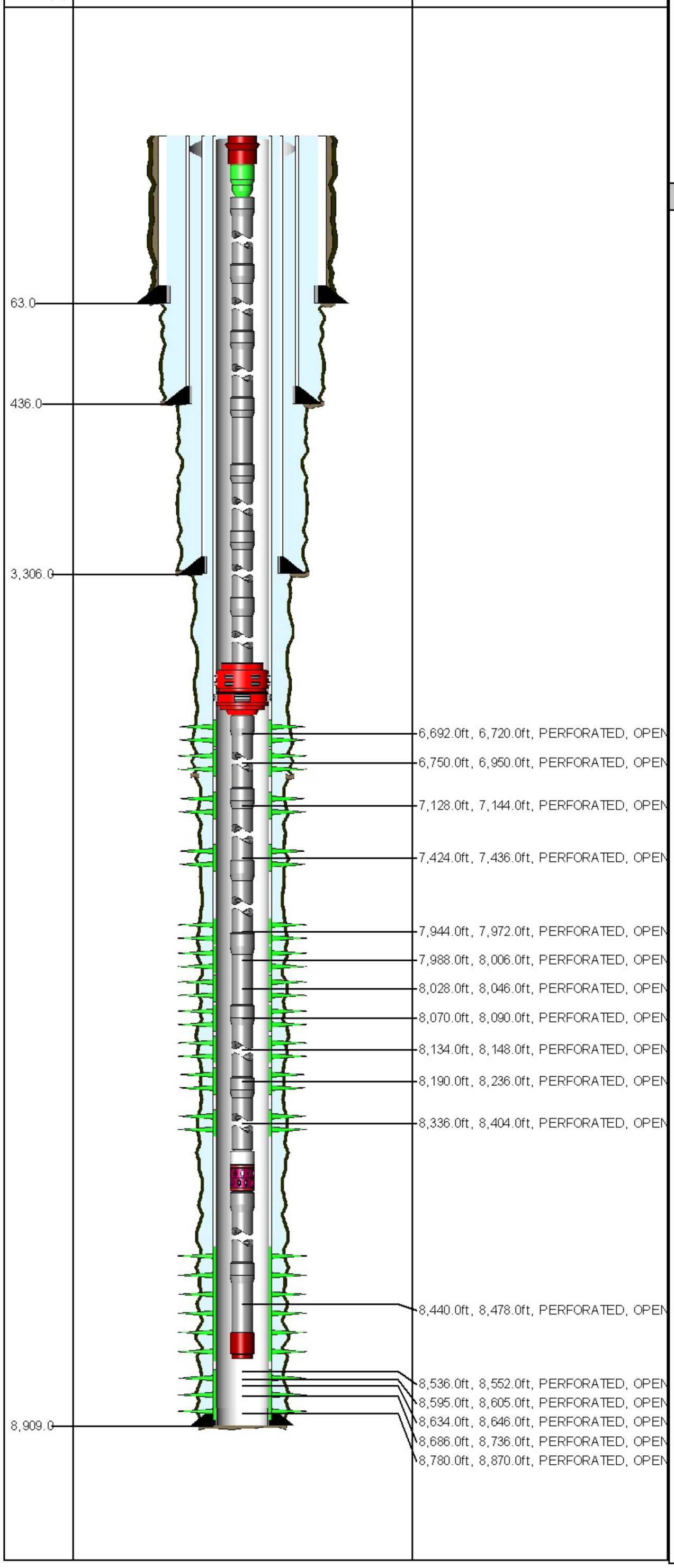

ROD STRING Report Date: 4/7/2007 00:00

Component	Top MD (ft)	Btm MD (ft)
POLROD	0.0	36.0
PNYROD	36.0	42.0
ROD	42.0	192.0
COROD	192.0	487.0
COROD	487.0	8,237.0
RSTBAR	8,237.0	8,241.0
ON-OFF	8,241.0	8,242.0
RSTBAR	8,242.0	8,246.0
R-4PER	8,246.0	8,306.0
RSTBAR	8,306.0	8,310.0
INSPMP	8,310.0	8,334.0

TUBING STRING Report Date: 4/4/2007 00:00

Component	Top MD (ft)	Btm MD (ft)
TH-DBB	23.0	23.7
FATNIP	23.7	24.3
CAS	24.3	6,624.8
AC	6,624.8	6,627.2
CAS	6,627.2	8,419.4
PMPSH	8,419.4	8,420.0
PRFNIP	8,420.0	8,428.0
CAS	8,428.0	8,458.6
STCOLL	8,458.6	8,459.1

CONDUCTOR CASING Report Date: 6/19/2006 00:00

Item	OD (in)	Grade	Wt. (ppf)	TopMD (ft)	BtmMD (ft)
CASING JOINT(S)	20.000			23.0	63.0

SURFACE CASING Report Date: 6/22/2006 00:00

Item	OD (in)	Grade	Wt. (ppf)	TopMD (ft)	BtmMD (ft)
CASING JOINT(S)	13.375	J-55	54.50	23.0	390.4
	13.375			390.4	390.5
CASING JOINT(S)	13.375	J-55	54.50	390.5	434.9
CASING GUIDE SHOE	13.375	J-55	54.50	434.9	436.0

INTERMEDIATE CASING Report Date: 6/26/2006 00:00

Item	OD (in)	Grade	Wt. (ppf)	TopMD (ft)	BtmMD (ft)
LANDING JOINT	9.625	K-55	36.00	23.0	50.5
CASING MANDREL	13.625	C110 S	36.00	50.5	51.6
CASING JOINT(S)	9.625	J-55	36.00	51.6	54.8
CASING JOINT(S)	9.625	J-55	36.00	54.8	3,261.8
	9.625	J-55	36.00	3,261.8	3,261.8
CASING JOINT(S)	9.625	J-55	36.00	3,261.8	3,305.2
CASING GUIDE SHOE	9.625	J-55	36.00	3,305.2	3,306.0

PRODUCTION CASING Report Date: 7/7/2006 00:00

Item	OD (in)	Grade	Wt. (ppf)	TopMD (ft)	BtmMD (ft)
CASING JOINT(S)	7.000	K-55	23.00	23.0	37.4
PUP JOINT	7.000	K-55	23.00	37.4	47.4
CASING JOINT(S)	7.000	K-55	23.00	47.4	4,482.6
CASING JOINT(S)	7.000	N-80	26.00	4,482.6	6,576.8
FLAG JOINT	7.000	N-80	26.00	6,576.8	6,596.4
CASING JOINT(S)	7.000	N-80	26.00	6,596.4	8,812.1
CASING FLOAT COLLAR	7.000	N-80	26.00	8,812.1	8,813.1
CASING JOINT(S)	7.000	N-80	26.00	8,813.1	8,907.8
FLOAT SHOE	7.000	N-80	26.00	8,907.8	8,909.0

Well: 387X-33S S/T/R: 33S/30S/24E

CASING CEMENT DETAIL
- - -
Sfc Csg. Cmt Vol.: 577 cf
Hole Size: 17.5"
Top Job: No
Rtns to Sfc: 15 cf
TOC: Sfc
- - -

Interm Csg. Cmt Vol.: 2088 cf
Hole Size: 12.25"
Top Job: No
Rtns to Sfc: 673 cf
TOC: Sfc
- - -

Prod. Csg. Cmt Vol.: 2102 cf
Hole Size: 8.75"
Top Job: No
Rtns to Sfc: 112 cf
TOC: Sfc

Liner Cmt Vol.:
Hole Size:
Top Job:
Rtns to Sfc:
TTOC:
- - -
Top of Formation:
UBA: 8867
BLW: N/A

Volume Behind Pipe:
1.3 Yield Assumed
Theoretical Calculations (TTOC)

OCCIDENTAL OF ELK HILLS INC

387X-34S

Event: WELL MAINT - RIGLESS
Event End:
Sec. Reason:

Ground Elev: 848.2ft
KB to Ground: 0.0ft
Datum: ORIGINAL KB @ 869.20ft (default)
API No.: 0403018187

Wellbore: ORIGINAL HOLE
Top TMD: 0.0ft
PBMD: 7,260.0ft
Btm TMD: 7,600.0ft
Spud Date: 6/21/2001 00:00
BH Coord X: 6,150,770.71uss ft BH Coord Y: 2,287,965.18uss ft

Casing Shoes (ft)	Schematic (9/1/2009)	Openings Top/Btm/Type/Status

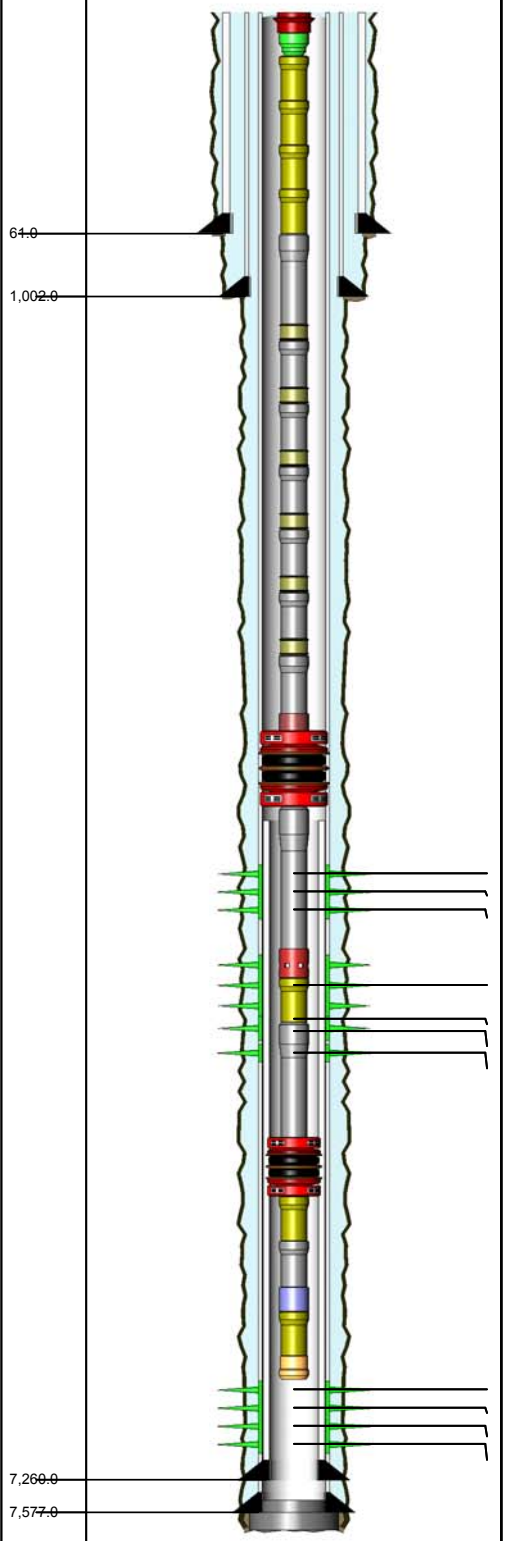

6,630.0ft, 6,680.0ft, PERFORATED, OPEN
6,680.0ft, 6,690.0ft, PERFORATED, OPEN
6,690.0ft, 6,708.0ft, PERFORATED, OPEN
6,728.0ft, 6,740.0ft, PERFORATED, OPEN
6,740.0ft, 6,744.0ft, PERFORATED, OPEN
6,744.0ft, 6,782.0ft, PERFORATED, OPEN
6,792.0ft, 6,806.0ft, PERFORATED, OPEN
7,101.0ft, 7,104.0ft, PERFORATED, OPEN
7,116.0ft, 7,190.0ft, PERFORATED, OPEN
7,190.0ft, 7,200.0ft, PERFORATED, OPEN
7,200.0ft, 7,220.0ft, PERFORATED, OPEN

TUBING STRING — Report Date: 11/7/2007 00:00

Component	Top MD (ft)	Btm MD (ft)
TH-DBB	21.0	21.7
FATNIP	21.7	22.3
PUPJNT	22.3	32.5
PUPJNT	32.5	42.7
PUPJNT	42.7	46.9
PUPJNT	46.9	49.0
CAS	49.0	2,286.4
GLM	2,286.4	2,295.0
CAS	2,295.0	3,909.2
GLM	3,909.2	3,917.8
CAS	3,917.8	4,909.8
GLM	4,909.8	4,918.4
CAS	4,918.4	5,512.0
GLM	5,512.0	5,520.5
CAS	5,520.5	6,051.2
GLM	6,051.2	6,059.7
CAS	6,059.7	6,468.7
GLM	6,468.7	6,477.1
CAS	6,477.1	6,503.8
ON-OFF	6,503.8	6,506.0
PKR	6,506.0	6,511.5
CAS	6,511.5	6,727.2
SS	6,727.2	6,731.2
PUPJNT	6,731.2	6,741.3
CAS	6,741.3	6,927.2
PKR	6,927.2	6,933.7
PUPJNT	6,933.7	6,937.9
CAS	6,937.9	7,034.5
NOGO	7,034.5	7,035.9
PUPJNT	7,035.9	7,040.1
WLREG	7,040.1	7,040.6

PLUG BACK — Report Date: 7/28/2001 00:00

Component	Top MD (ft)	Btm MD (ft)
CEMENT	7,481.0	7,577.0

PLUG BACK — Report Date: 7/20/2001 00:00

Component	Top MD (ft)	Btm MD (ft)
CEMENT	7,577.0	7,600.0

CONDUCTOR CASING — Report Date: 6/18/2001 00:00

Item Description	Btm MD(ft)
CASING JOINT(S) 14 in,	61.0

SURFACE CASING — Report Date: 6/21/2001 00:00

Item Description	Btm MD(ft)
CASING JOINT(S) 9.625 in, , K-55, 36	954.8
INSERT FLOAT 9.625 in, , K-55	954.8
CASING JOINT(S) 9.625 in, , K-55, 36	1,000.8
GUIDE SHOE 9.625 in, , K-55	1,002.0

PRODUCTION CASING — Report Date: 7/19/2001 00:00

Item Description	Btm MD (ft)
CASING JOINT(S) 7 in, , N-80, 26	6,488.2
FLAG JOINT 7 in, , N-80, 26	6,503.6
CASING JOINT(S) 7 in, , N-80, 26	7,283.9
CROSSOVER 7 in, , N-80, 26	7,307.8
CASING JOINT(S) 7 in, , N-80, 26	7,480.8
FLOAT COLLAR 7 in, , N-80	7,483.2
CASING JOINT(S) 7 in, , N-80, 26	7,575.3
FLOAT SHOE 7 in, , N-80	7,577.0

SCREEN / SLOTTED LINER — Report Date: 11/5/2007 00:00

Item Description	Btm MD (ft)
Hangers, LINER HANGER, , 26.00 ppf, , LTC	6,582.4
Casing, BLANK, , 17.00 ppf, , LTC	6,621.3
Casing, SLOTTED LINER, , 17.00 ppf, , LTC	6,893.4
Casing, DOUBLE CUP SUB, , 26.00 ppf, N-80, LTC	6,899.2
Casing, BLANK, , 17.00 ppf, N-80, LTC	7,018.2
Casing, SLOTTED LINER, , 17.00 ppf, N-80, HYDRIL	7,219.1
Casing, BULL PLUG, , ppf, ,	7,260.0

Well: 387X-34S S/T/R: 34S/30S/24E

CASING CEMENT DETAIL
- - -
Sfc Csg. Cmt Vol.: 643 cf
Hole Size: 12-1/4" (9-5/8' casing)
Top Job:
Rtns to Sfc: Yes
TTOC: NA
- - -
Int. Csg. Cmt Vol.: NONE
Hole Size:
Top Job:
Rtns to Sfc:
TOC:
- - -
Prod Csg. Cmt Vol.: 1891cf
Hole Size: 8-3/4" (7" Casing)
Top Job: NO
Rtns to Sfc: Yes
TTOC: NA
- - -
Liner Cmt Vol.: none - Slotted Liner
Hole Size:
Rtns to Sfc:
TTOC:

Top of Formation:
UBA: 6790'
BLW: 7301'

Volume Behind Pipe
1.3 Yield Assumed on
Theoretical Calculations

OCCIDENTAL OF ELK HILLS INC

388-33S

Event: WELL MAINT - RIG
Event End: 6/21/2008 00:00
Sec. Reason: SANDED

Ground Level: 986.0ft
Datum: ORIGINAL KB @ 995.00ft (default)
API No.: 0402927618

Wellbore: ORIGINAL HOLE
PBMD: 5,365.0ft
Btm TMD: 7,420.0ft
Spud Date: 6/8/1951 00:00
BH Coord X: 6,145,127.30uss ft
BH Coord Y: 2,286,896.60uss ft

Casing Shoes (ft) | Schematic (7/1/2008) | Openings Top/Btm/Type/Status

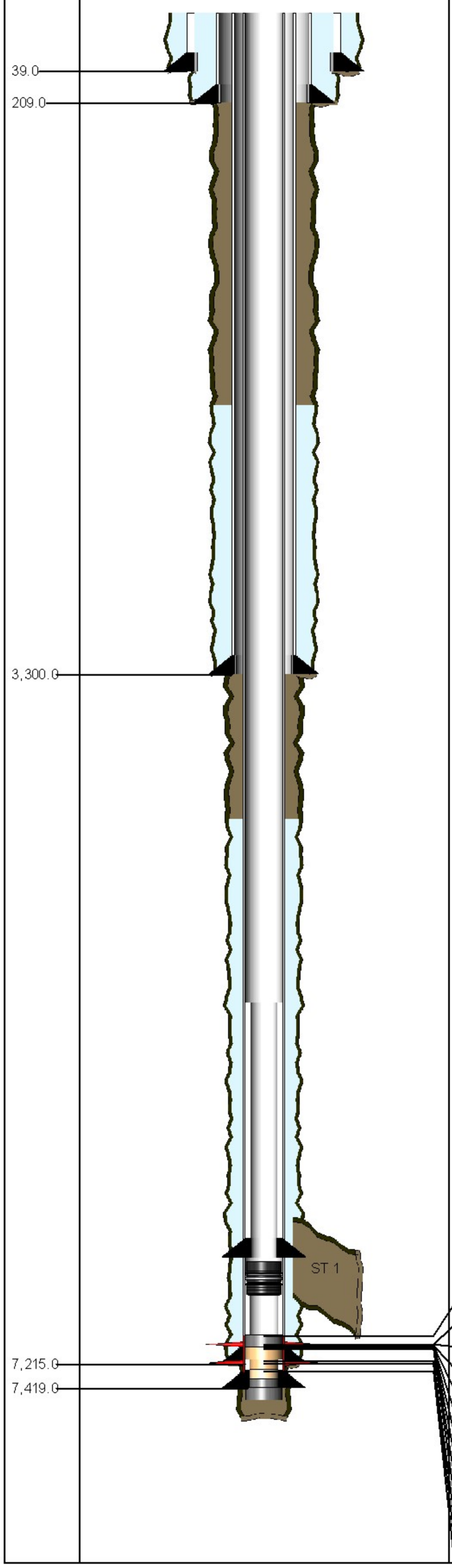

5,970.0ft, 5,971.0ft, PERFORATED, ABAN
6,780.0ft, 6,870.0ft, PERFORATED, ABAN
6,780.0ft, 6,860.0ft, PERFORATED, ABAN
6,885.0ft, 6,960.0ft, PERFORATED, ABAN
6,880.0ft, 7,040.0ft, PERFORATED, ABAN
6,980.0ft, 7,045.0ft, PERFORATED, ABAN
7,055.0ft, 7,100.0ft, PERFORATED, ABAN
7,065.0ft, 7,105.0ft, PERFORATED, ABAN
7,125.0ft, 7,135.0ft, PERFORATED, ABAN
7,115.0ft, 7,138.0ft, PERFORATED, ABAN
7,150.0ft, 7,205.0ft, PERFORATED, ABAN
7,156.0ft, 7,270.0ft, PERFORATED, ABAN
7,293.0ft, 7,313.0ft, PERFORATED, ABAN

ROD STRING Report Date: 6/21/2008 00:00

Component	Top MD (ft)	Btm MD (ft)
POLROD	0.0	36.0
POLRDL	36.0	36.0
PNYROD	36.0	46.0
ROD	46.0	2,506.0
ROD	2,506.0	4,936.0
R-4PER	4,936.0	6,286.0
ROD	6,286.0	7,156.0
RSTBAR	7,156.0	7,160.0
INSPMP	7,160.0	7,190.0

TUBING STRING Report Date: 6/20/2008 00:00

Component	Top MD (ft)	Btm MD (ft)
TH-DBB	9.0	9.7
FATNIP	9.7	10.4
CAS	10.4	4,850.3
AC	4,850.3	4,852.6
PUPJNT	4,852.6	4,860.7
XO	4,860.7	4,861.7
CAS	4,861.7	7,221.6
STNIP	7,221.6	7,222.3
CAS	7,222.3	7,253.3
XO	7,253.3	7,254.3
STCOLL	7,254.3	7,254.7

PLUG BACK Report Date: 3/20/2002 00:00

Component	Top MD (ft)	Btm MD (ft)
BP-DR	5,365.0	5,368.0

PLUG BACK Report Date: 3/16/2002 00:00

Component	Top MD (ft)	Btm MD (ft)
CEMENT	5,932.0	7,134.0
FILL	7,134.0	7,152.0

PLUG BACK Report Date: 5/15/1999 00:00

Component	Top MD (ft)	Btm MD (ft)
FILL	7,152.0	7,294.0

PLUG BACK Report Date: 9/24/1997 00:00

Component	Top MD (ft)	Btm MD (ft)
SAND	7,294.0	7,350.0

PLUG BACK Report Date: 7/26/1988 00:00

Component	Top MD (ft)	Btm MD (ft)
CEMENT	7,350.0	7,419.0

PLUG BACK Report Date: 5/30/1988 00:00

Component	Top MD (ft)	Btm MD (ft)
CEMENT	7,419.0	7,420.0

CONDUCTOR CASING Report Date: 6/8/1951 00:00

Item	OD (in)	Grade	Wt. (ppf)	TopMD (ft)	BtmMD (ft)
CASING JOINT(S)	26.000			9.0	39.0

SURFACE CASING Report Date: 7/15/1951 00:00

Item	OD (in)	Grade	Wt. (ppf)	TopMD (ft)	BtmMD (ft)
CASING JOINT(S)	16.000	H-40	65.00	9.0	209.0

INTERMEDIATE CASING Report Date: 7/21/1951 00:00

Item	OD (in)	Grade	Wt. (ppf)	TopMD (ft)	BtmMD (ft)
CASING JOINT(S)	10.750	J-55	45.50	9.0	17.0
CASING JOINT(S)	10.750	J-55	40.50	17.0	1,779.0
CASING JOINT(S)	10.750	J-55	45.50	1,779.0	3,300.0

PRODUCTION CASING Report Date: 8/12/1951 00:00

Item	OD (in)	Grade	Wt. (ppf)	TopMD (ft)	BtmMD (ft)
CASING JOINT(S)	7.000	N-80	26.00	9.0	52.0
CASING JOINT(S)	7.000	N-80	23.00	52.0	5,692.0
CASING JOINT(S)	7.000	N-80	26.00	5,692.0	7,215.0

LINER Report Date: 5/30/1988 00:00

Item	OD (in)	Grade	Wt. (ppf)	TopMD (ft)	BtmMD (ft)
LINER HANGER	6.276			7,152.0	7,158.8
CASING JOINT(S)	5.500	K-55	20.00	7,158.8	7,329.5
FLOAT COLLAR	5.500			7,329.5	7,331.5
CASING JOINT(S)	5.500	K-55	20.00	7,331.5	7,417.0
FLOAT SHOE	5.500			7,417.0	7,419.0

LINER Report Date: 6/5/2002 00:00

Item	OD (in)	Grade	Wt. (ppf)	TopMD (ft)	BtmMD (ft)
PBR	6.366			5,076.0	5,094.0
PROFILE NIPPLE (OPEN)	5.000			5,094.0	5,095.1
LINER HANGER PACKER	6.366			5,095.1	5,101.1
CASING JOINT(S)	5.000	N-80	15.00	5,101.1	7,389.7
BAFFLE PLATE	5.000	N-80	15.00	7,389.7	7,389.7
	5.000	N-80		7,389.7	7,389.7
CASING JOINT(S)	5.000	N-80	15.00	7,389.7	7,436.5
GUIDE SHOE	5.000	N-80		7,436.5	7,437.0

Well: 388-33S S/T/R: 33S/30S/24E

CASING CEMENT DETAIL
- - -
Sfc Csg. Cmt Vol.: 500 sx
Hole Size: 20"
Top Job: No
Rtns to Sfc: 3 cf
TOC: Sfc
- - -

Interm Csg. Cmt Vol.: 600 sx
Hole Size: 15"
Top Job: No
Rtns to Sfc: No
TTOC: 1845'
- - -

Prod. Csg. Cmt Vol.: 567 cf
Hole Size: 9.75"
Top Job: No
Rtns to Sfc: No
TTOC: 4085'

Liner Cmt Vol.: 230 cf
Hole Size: 6.25"
Top Job: No
Rtns to Sfc: No
TTOC: TOL'
- - -
Top of Formation:
UBA: 6780'
BLW: 7321'

Volume Behind Pipe:
1.3 Yield Assumed
Theoretical Calculations (TTOC)

OCCIDENTAL OF ELK HILLS INC

388-33S

Event: WELL MAINT - RIG
Event End: 6/21/2008 00:00
Sec. Reason: SANDED

Ground Level: 986.0ft
Datum: ORIGINAL KB @ 995.00ft (default)
API No.: 0402927618

Wellbore: ST 1
PBMD: 7,324.0ft
Btm TMD: 7,440.0ft
Spud Date: 6/8/1951 00:00
BH Coord X: 6,145,094.21uss ft
BH Coord Y: 2,287,083.93uss ft

Casing Shoes (ft) | Schematic (7/1/2008) | Openings Top/Btm/Type/Status

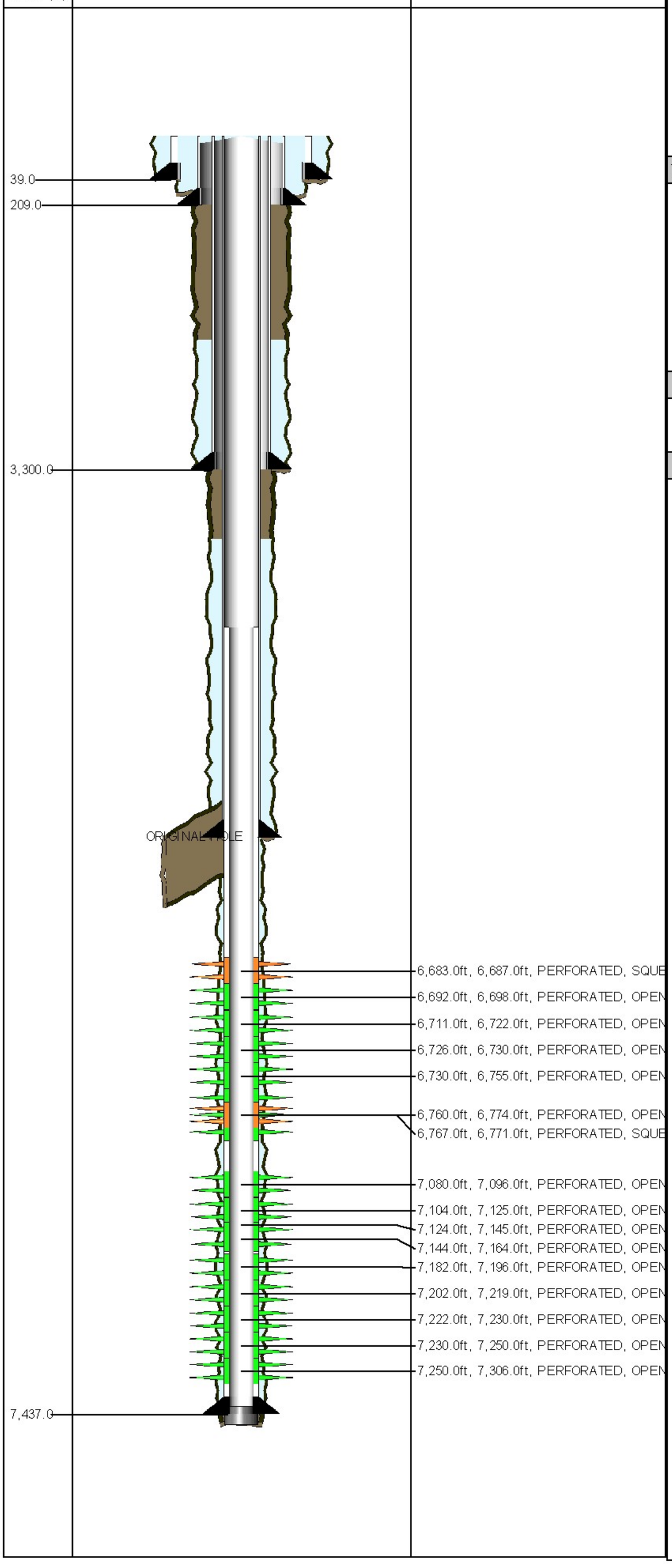

ROD STRING Report Date: 6/21/2008 00:00

Component	Top MD (ft)	Btm MD (ft)
POLROD	0.0	36.0
POLRDL	36.0	36.0
PNYROD	36.0	46.0
ROD	46.0	2,506.0
ROD	2,506.0	4,936.0
R-4PER	4,936.0	6,286.0
ROD	6,286.0	7,156.0
RSTBAR	7,156.0	7,160.0
INSPMP	7,160.0	7,190.0

TUBING STRING Report Date: 6/20/2008 00:00

Component	Top MD (ft)	Btm MD (ft)
TH-DBB	9.0	9.7
FATNIP	9.7	10.4
CAS	10.4	4,850.3
AC	4,850.3	4,852.6
PUPJNT	4,852.6	4,860.7
XO	4,860.7	4,861.7
CAS	4,861.7	7,221.6
STNIP	7,221.6	7,222.3
CAS	7,222.3	7,253.3
XO	7,253.3	7,254.3
STCOLL	7,254.3	7,254.7

PLUG BACK Report Date: 6/20/2002 00:00

Component	Top MD (ft)	Btm MD (ft)
CEMENT	7,368.0	7,437.0

PLUG BACK Report Date: 6/5/2002 00:00

Component	Top MD (ft)	Btm MD (ft)
CEMENT	7,437.0	7,440.0

CONDUCTOR CASING Report Date: 6/8/1951 00:00

Item	OD (in)	Grade	Wt. (ppf)	TopMD (ft)	BtmMD (ft)
CASING JOINT(S)	26.000			9.0	39.0

SURFACE CASING Report Date: 7/15/1951 00:00

Item	OD (in)	Grade	Wt. (ppf)	TopMD (ft)	BtmMD (ft)
CASING JOINT(S)	16.000	H-40	65.00	9.0	209.0

INTERMEDIATE CASING Report Date: 7/21/1951 00:00

Item	OD (in)	Grade	Wt. (ppf)	TopMD (ft)	BtmMD (ft)
CASING JOINT(S)	10.750	J-55	45.50	9.0	17.0
CASING JOINT(S)	10.750	J-55	40.50	17.0	1,779.0
CASING JOINT(S)	10.750	J-55	45.50	1,779.0	3,300.0

PRODUCTION CASING Report Date: 8/12/1951 00:00

Item	OD (in)	Grade	Wt. (ppf)	TopMD (ft)	BtmMD (ft)
CASING JOINT(S)	7.000	N-80	26.00	9.0	52.0
CASING JOINT(S)	7.000	N-80	23.00	52.0	5,692.0
CASING JOINT(S)	7.000	N-80	26.00	5,692.0	7,215.0

LINER Report Date: 6/5/2002 00:00

Item	OD (in)	Grade	Wt. (ppf)	TopMD (ft)	BtmMD (ft)
PBR	6.366			5,076.0	5,094.0
PROFILE NIPPLE (OPEN)	5.000			5,094.0	5,095.1
LINER HANGER PACKER	6.366			5,095.1	5,101.1
CASING JOINT(S)	5.000	N-80	15.00	5,101.1	7,389.7
BAFFLE PLATE	5.000	N-80	15.00	7,389.7	7,389.7
	5.000	N-80		7,389.7	7,389.7
CASING JOINT(S)	5.000	N-80	15.00	7,389.7	7,436.5
GUIDE SHOE	5.000	N-80		7,436.5	7,437.0

Well: 388-33S-RD1 S/T/R: 33S/30S/24E

CASING CEMENT DETAIL
- - -
Sfc Csg. Cmt Vol.: 500 sx
Hole Size: 20"
Top Job: No
Rtns to Sfc: 3 cf
TOC: Sfc
- - -

Interm Csg. Cmt Vol.: 600 sx
Hole Size: 15"
Top Job: No
Rtns to Sfc: No
TTOC: 1845'
- - -

Prod. Csg. Cmt Vol.: 567 cf
Hole Size: 9.75"
Top Job: No
Rtns to Sfc: No
TTOC: 4085'

RD Liner Cmt Vol.: 230 cf
Hole Size: 6.125"
Top Job: No
Rtns to Sfc: No
TTOC: TOL
- - -
Top of Formation:
UBA: 6786'
BLW: 7342'

Volume Behind Pipe:
1.3 Yield Assumed
Theoretical Calculations (TTOC)

OCCIDENTAL OF ELK HILLS INC

388-34S

Event: WELL MAINT - RIG
Event End: 7/11/2008 00:00
Sec. Reason: LEAK

Ground Level: 956.0ft
Datum: ORIGINAL KB @ 965.00ft (default)
API No.: 0402927670

Wellbore: ORIGINAL HOLE
PBMD: 7,441.0ft
Btm TMD: 7,450.0ft
Spud Date: 2/1/1951 00:00
BH Coord X: 6,150,513.20uss ft
BH Coord Y: 2,286,987.93uss ft

Casing Shoes (ft) | Schematic (7/11/2008) | Openings Top/Btm/Type/Status

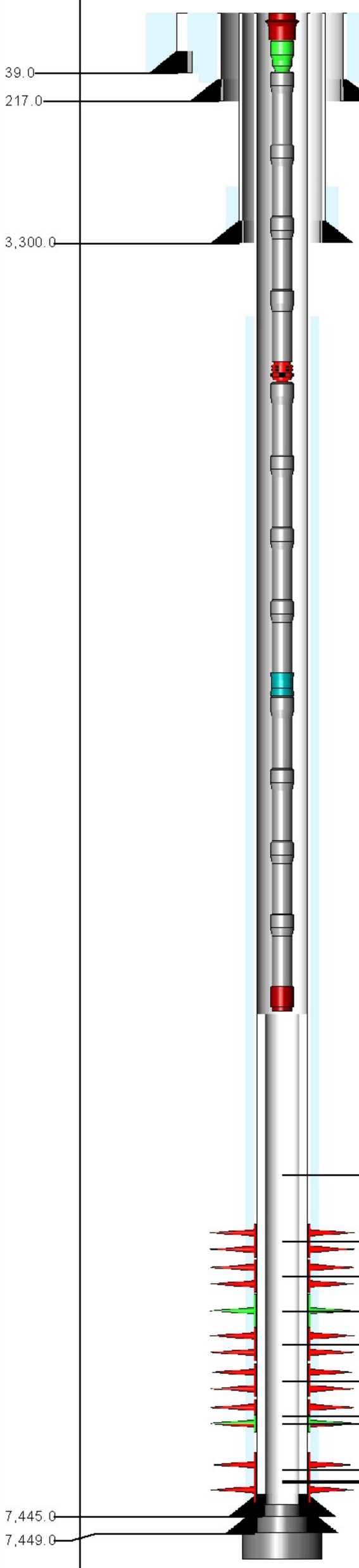

6,150.0ft, 6,151.0ft, WSO PERFS, SQUEE
6,805.0ft, 6,852.0ft, REPERFORATED, OP
6,805.0ft, 6,852.0ft, PERFORATED, ABAN
6,872.0ft, 6,927.0ft, REPERFORATED, OP
6,872.0ft, 6,927.0ft, PERFORATED, ABAN
6,949.0ft, 6,965.0ft, PERFORATED, OPEN
6,967.0ft, 7,059.0ft, PERFORATED, ABAN
7,087.0ft, 7,150.0ft, PERFORATED, ABAN
7,165.0ft, 7,320.0ft, PERFORATED, ABAN
7,237.0ft, 7,320.0ft, PERFORATED, OPEN
7,382.0ft, 7,392.0ft, PERFORATED, ABAN
7,384.0ft, 7,433.0ft, REPERFORATED, OP
7,385.0ft, 7,435.0ft, PERFORATED, ABAN

ROD STRING Report Date: 7/10/2008 00:00

Component	Top MD (ft)	Btm MD (ft)
POLRDL	0.0	36.0
PNYROD	36.0	60.0
ROD	60.0	1,260.0
ROD	1,260.0	2,310.0
ROD	2,310.0	4,890.0
ROD	4,890.0	5,520.0
ROD	5,520.0	5,940.0
RSTBAR	5,940.0	5,943.0
INSPMP	5,943.0	5,973.0

TUBING STRING Report Date: 7/4/2008 00:00

Component	Top MD (ft)	Btm MD (ft)
TH-DBB	9.0	9.6
FATNIP	9.6	10.3
TBGJNT	10.3	5,577.8
AC	5,577.8	5,580.1
TBGJNT	5,580.1	5,954.4
STNIP	5,954.4	5,955.5
TBGJNT	5,955.5	5,986.9
STCOLL	5,986.9	5,987.4

PLUG BACK Report Date: 11/29/1994 00:00

Component	Top MD (ft)	Btm MD (ft)
CEMENT	7,441.0	7,445.0

PLUG BACK Report Date: 4/18/1951 00:00

Component	Top MD (ft)	Btm MD (ft)
CEMENT	7,445.0	7,449.0

PLUG BACK Report Date: 4/12/1951 00:00

Component	Top MD (ft)	Btm MD (ft)
CEMENT	7,449.0	7,450.0

CONDUCTOR CASING Report Date: 2/1/1951 00:00

Item	OD (in)	Grade	Wt. (ppf)	TopMD (ft)	BtmMD (ft)
CASING JOINT(S)	26.000			9.0	39.0

SURFACE CASING Report Date: 3/16/1951 00:00

Item	OD (in)	Grade	Wt. (ppf)	TopMD (ft)	BtmMD (ft)
CASING JOINT(S)	16.000	H-40	65.00	9.0	217.0

INTERMEDIATE CASING Report Date: 3/24/1951 00:00

Item	OD (in)	Grade	Wt. (ppf)	TopMD (ft)	BtmMD (ft)
CASING JOINT(S)	10.750	J-55	45.50	9.0	40.0
CASING JOINT(S)	10.750	J-55	40.50	40.0	1,960.0
CASING JOINT(S)	10.750	J-55	45.50	1,960.0	3,300.0

PRODUCTION CASING Report Date: 4/12/1951 00:00

Item	OD (in)	Grade	Wt. (ppf)	TopMD (ft)	BtmMD (ft)
CASING JOINT(S)	7.000		26.00	9.0	72.0
CASING JOINT(S)	7.000		23.00	72.0	5,748.0
CASING JOINT(S)	7.000		26.00	5,748.0	7,448.0
FLOAT SHOE	7.000		26.00	7,448.0	7,449.0

LINER Report Date: 11/22/1994 00:00

Item	OD (in)	Grade	Wt. (ppf)	TopMD (ft)	BtmMD (ft)
TIE BACK	6.276	N-80	18.00	6,026.0	6,039.6
PBR	6.276	N-80	18.00	6,039.6	6,054.0
LINER HANGER	6.276	N-80	18.00	6,054.0	6,063.0
CASING JOINT(S)	5.000	N-80	18.00	6,063.0	7,441.5
FLOAT COLLAR	5.000	N-80	18.00	7,441.5	7,443.6
FLOAT SHOE	5.000	N-80	18.00	7,443.6	7,445.0

Well: 388-34S S/T/R: 34S/30S/24E

CASING CEMENT DETAIL
- - -
Sfc Csg. Cmt Vol.: 485 sx
Hole Size: 22"
Top Job: No
Rtns to Sfc:
TTOC: Sfc
- - -

Interm Csg. Cmt Vol.: 500 sx
Hole Size: 15"
Top Job: No
Rtns to Sfc: No
TOC: 2230' (Thermo Survey)
- - -

Prod. Csg. Cmt Vol.: 500 sx
Hole Size: 9.75"
Top Job: No
Rtns to Sfc: No
TOC: 4705' (Thermo Survey)
- - -

Liner Cmt Vol.: 147 cf
Hole Size: 6.125"
Top Job: No
Rtns to Sfc: No
TTOC: 6063'
- - -
Top of Formation:
UBA: 6947'
BLW: 7438'

Volume Behind Pipe:
1.3 Yield Assumed
Theoretical Calculations (TTOC)

OCCIDENTAL OF ELK HILLS INC

3-88-35S

Event: WELL MAINT - RIG
Event End: 7/23/2009 00:00
Sec. Reason:

Ground Level: 751.0ft
Datum: ORIGINAL KB @ 759.00ft (default)
API No.: 0402927785

Wellbore: ORIGINAL HOLE
PBMD: 3,477.0ft
Btm TMD: 7,650.0ft
Spud Date: 11/27/1953 00:00
BH Coord X: 6,155,650.19uss ft
BH Coord Y: 2,286,713.93uss ft

Casing Shoes (ft) | Schematic (8/1/2009) | Openings Top/Btm/Type/Status

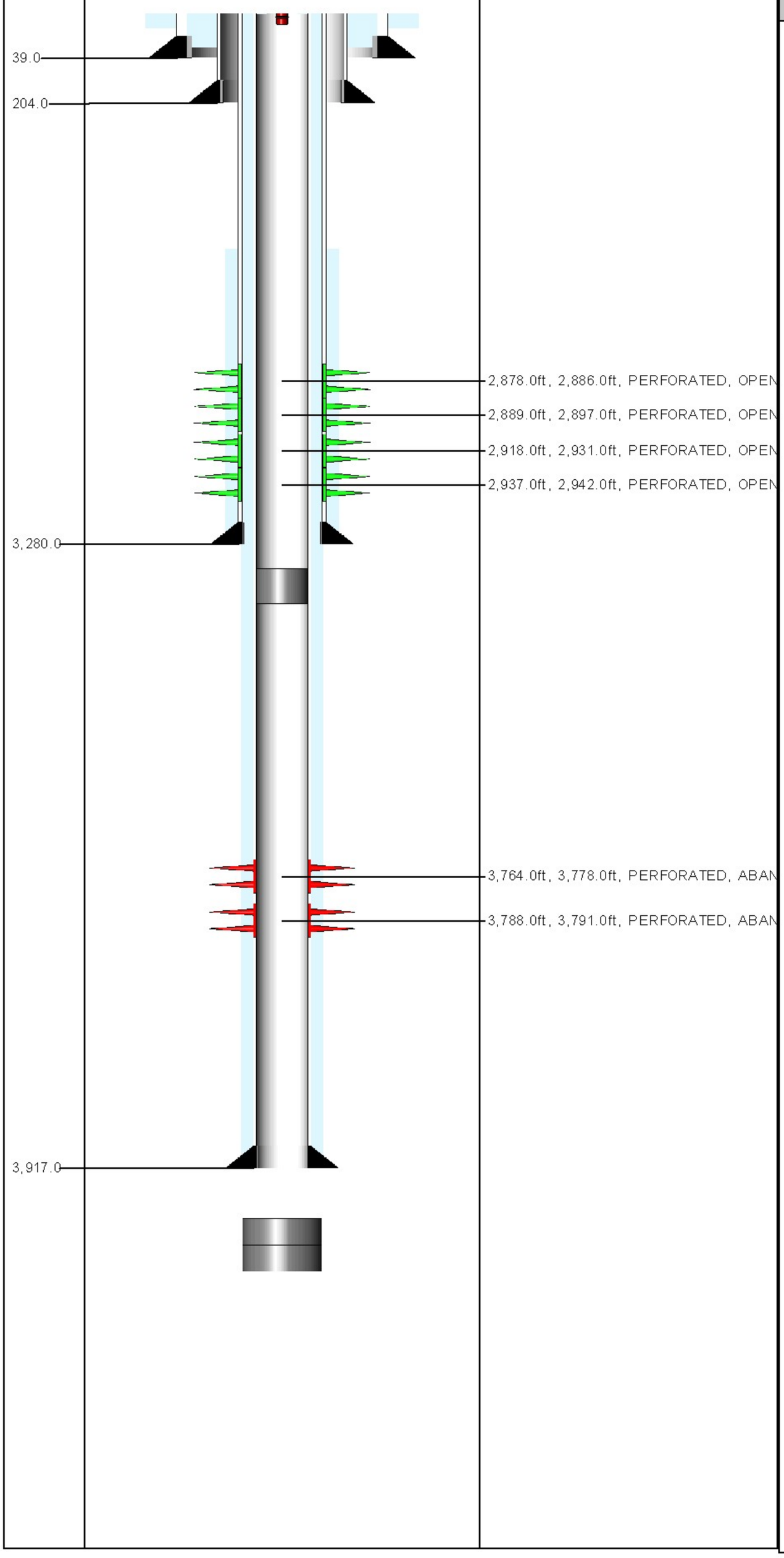

TUBING STRING Report Date: 6/17/2005 00:00

Component	Top MD (ft)	Btm MD (ft)
TH-DBB	8.0	8.8

PLUG BACK Report Date: 12/6/2001 00:00

Component	Top MD (ft)	Btm MD (ft)
CEMENT	3,477.0	3,486.0
CEMENT	3,486.0	3,490.0

PLUG BACK Report Date: 1/14/1954 00:00

Component	Top MD (ft)	Btm MD (ft)
CEMENT	3,929.0	6,600.0

PLUG BACK Report Date: 1/13/1954 00:00

Component	Top MD (ft)	Btm MD (ft)
CEMENT	6,600.0	7,650.0

CONDUCTOR CASING Report Date: 11/27/1953 00:00

Item	OD (in)	Grade	Wt. (ppf)	TopMD (ft)	BtmMD (ft)
CASING JOINT(S)	26.000		68.00	8.0	39.0

SURFACE CASING Report Date: 12/15/1953 00:00

Item	OD (in)	Grade	Wt. (ppf)	TopMD (ft)	BtmMD (ft)
CASING JOINT(S)	16.000	H-40	65.00	8.0	204.0

PRODUCTION CASING Report Date: 12/20/1953 00:00

Item	OD (in)	Grade	Wt. (ppf)	TopMD (ft)	BtmMD (ft)
CASING JOINT(S)	10.750	J-55	45.50	8.0	72.0
CASING JOINT(S)	10.750	J-55	40.50	72.0	2,254.0
CASING JOINT(S)	10.750	J-55	45.50	2,254.0	3,280.0

PRODUCTION CASING Report Date: 4/13/1999 00:00

Item	OD (in)	Grade	Wt. (ppf)	TopMD (ft)	BtmMD (ft)
CASING JOINT(S)	7.000	K-55	23.00	8.0	3,875.0
	7.000	K-55		3,875.0	3,876.0
CASING JOINT(S)	7.000	K-55	23.00	3,876.0	3,916.0
SET SHOE	7.000	K-55	23.00	3,916.0	3,917.0

Well: 3-88-35S S/T/R: 35S/30S/24E

CASING CEMENT DETAIL
- - -
Sfc Csg. Cmt Vol.: 645 cf
Bit Size: 22"
Top Job:
Rtns to Sfc: Yes
TOC: Sfc
- - -

Interm Csg. Cmt Vol.: 774 cf (T)
Bit Size: 15"
Top Job:
Rtns to Sfc:
TTOC: 1890'
- - -

Prod. Csg. Cmt Vol.: 458 cf (T)
Bit Size: 9-3/8"
Top Job:
Rtns to Sfc:
TTOC: 1500'

Liner Cmt Vol.:
Hole Size:
Top Job:
Rtns to Sfc:
TTOC:
- - -
Top of Formation:
UBA: 7464'
BLW: N/A

Volume Behind Pipe:
1.3 Yield Assumed
Theoretical Calculations (TTOC)

OCCIDENTAL OF ELK HILLS INC

3-88-3G

Event: WELL MAINT - RIG
Event End: 3/27/2004 00:00
Sec. Reason:

Ground Level: 764.0ft
Datum: ORIGINAL KB @ 783.00ft (default)
API No.: 0402968653

Wellbore: ORIGINAL HOLE
PBMD: 6,485.0ft
Btm TMD: 7,849.0ft
Spud Date: 4/18/1983 00:00
BH Coord X: 6,150,419.11uss ft
BH Coord Y: 2,281,709.96uss ft

Casing Shoes (ft) | Schematic (4/1/2004) | Openings Top/Btm/Type/Status

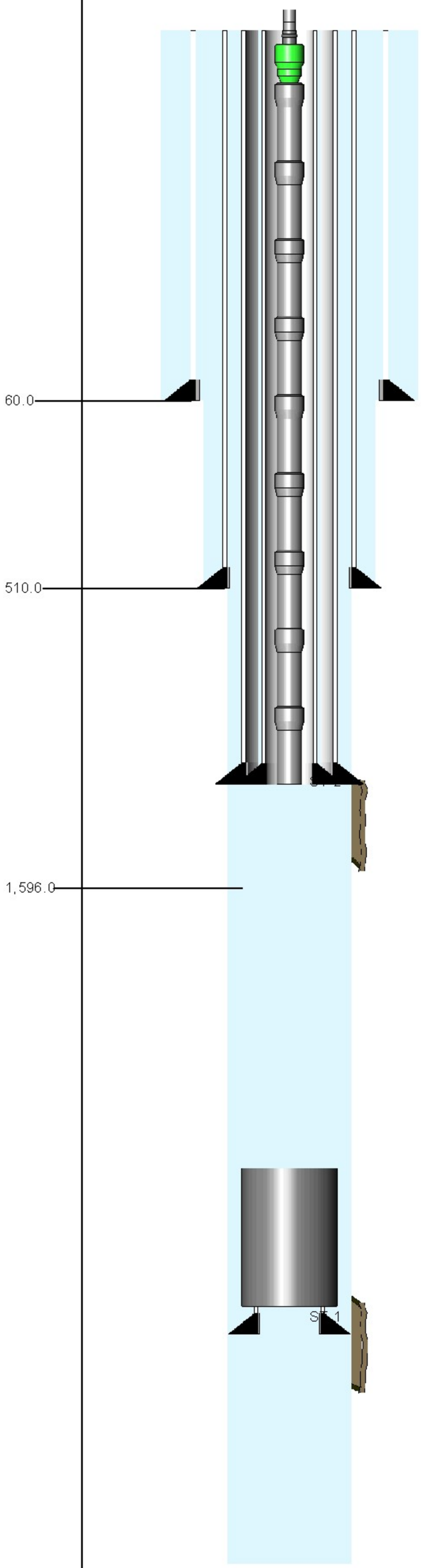

ROD STRING Report Date: 3/26/2004 00:00

Component	Top MD (ft)	Btm MD (ft)
POLROD	15.0	
PNYROD	45.0	69.0
ROD	69.0	3,009.0
RSTBAR	3,009.0	3,013.0
INSPMP	3,013.0	

TUBING STRING Report Date: 3/26/2004 00:00

Component	Top MD (ft)	Btm MD (ft)
TH-SGL	19.0	19.0
FATNIP	19.0	19.7
TBGJNT	19.7	2,878.3
AC	2,878.3	2,881.0
TBGJNT	2,881.0	2,943.9
BJ	2,943.9	2,975.0
TBGJNT	2,975.0	3,006.4
STNIP	3,006.4	3,007.5
PMPJKT	3,007.5	3,027.5

PLUG BACK Report Date: 10/3/2001 00:00

Component	Top MD (ft)	Btm MD (ft)
CEMENT	2,634.0	3,047.0

CONDUCTOR CASING Report Date: 4/18/1983 00:00

Item	OD (in)	Grade	Wt. (ppf)	TopMD (ft)	BtmMD (ft)
CASING JOINT(S)	20.000			19.0	60.0

SURFACE CASING Report Date: 6/3/1983 00:00

Item	OD (in)	Grade	Wt. (ppf)	TopMD (ft)	BtmMD (ft)
CASING JOINT(S)	13.375	K-55	54.50	19.0	510.0

PRODUCTION CASING Report Date: 6/8/1983 00:00

Item	OD (in)	Grade	Wt. (ppf)	TopMD (ft)	BtmMD (ft)
CASING JOINT(S)	9.625	K-55	40.00	19.0	1,586.0

LINER Report Date: 9/14/1983 00:00

Item	OD (in)	Grade	Wt. (ppf)	TopMD (ft)	BtmMD (ft)
LINER HANGER	7.000	K-55	23.00	2,972.0	2,972.5
PORTED SUB	7.000			2,972.5	2,975.5
SLOTTED LINER	7.000	K-55	23.00	2,975.5	3,020.5
SLOTTED LINER	7.000	K-55	23.00	3,020.5	3,054.5

PRODUCTION CASING Report Date: 11/21/2001 00:00

Item	OD (in)	Grade	Wt. (ppf)	TopMD (ft)	BtmMD (ft)
CASING JOINT(S)	5.500	K-55	15.50	19.0	2,683.0
FLAG JOINT	5.500	K-55	15.50	2,683.0	2,695.4
CASING JOINT(S)	5.500	K-55	15.50	2,695.4	3,224.6
	5.500			3,224.6	3,225.1
CASING JOINT(S)	5.500	K-55	15.50	3,225.1	3,265.8
SET SHOE	5.500			3,265.8	3,266.7

Well: 3-88-3G S/T/R: 34/30S/24E
Last Well Status: P&A

CASING CEMENT DETAIL
- - -
Sfc Csg. Cmt Vol.: 535 cf
Hole Size: 17.5
Top Job: no
Rtns to Sfc: 50 cf
TOC: sfc
- - -

Interm Csg. Cmt Vol.:
Hole Size:
Top Job:
Rtns to Sfc:
TOC:
- - -

Prod. Csg. Cmt Vol.: 2045 cf
Hole Size: 12.25
Top Job: no
Rtns to Sfc: 70 cf
TOC: sfc

Liner Cmt Vol.:
Hole Size:
Top Job:
Rtns to Sfc:
TOC:
- - -
Top of Formation:
UBA: 8495'
BLW: 9127'

Volume Behind Pipe:
1.3 Yield Assumed
Theoretical Calculations (TTOC)
JEP

OCCIDENTAL OF ELK HILLS INC

3-88-3G-RD1

Event: WELL MAINT - RIG
Event End: 3/27/2004 00:00
Sec. Reason:

Ground Level: 764.0ft
Datum: ORIGINAL KB @ 783.00ft (default)
API No.: 0402968653

Wellbore: ST 1
PBMD: 1,588.0ft
Btm TMD: 10,000.0ft
Spud Date: 4/18/1983 00:00
BH Coord X: 6,150,422.20uss ft
BH Coord Y: 2,281,709.94uss ft

Casing Shoes (ft)

Schematic (4/1/2004)

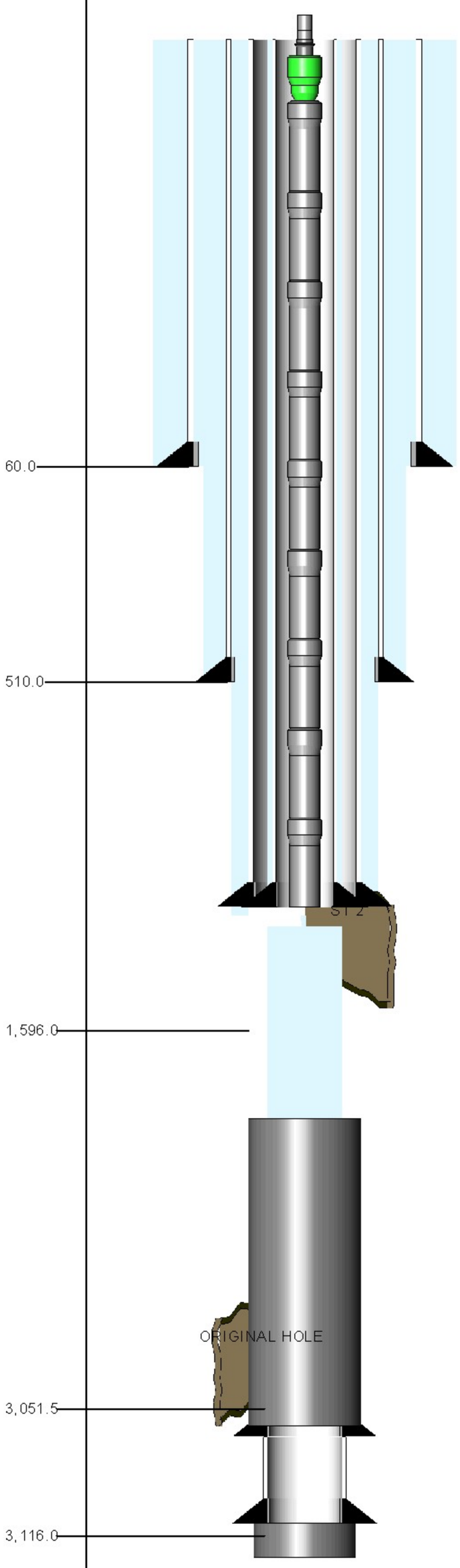

Openings Top/Btm/Type/Status

ROD STRING Report Date: 3/26/2004 00:00

Component	Top MD (ft)	Btm MD (ft)
POLROD	15.0	
PNYROD	45.0	69.0
ROD	69.0	3,009.0
RSTBAR	3,009.0	3,013.0
INSPMP	3,013.0	

TUBING STRING Report Date: 3/26/2004 00:00

Component	Top MD (ft)	Btm MD (ft)
TH-SGL	19.0	19.0
FATNIP	19.0	19.7
TBGJNT	19.7	2,878.3
AC	2,878.3	2,881.0
TBGJNT	2,881.0	2,943.9
BJ	2,943.9	2,975.0
TBGJNT	2,975.0	3,006.4
STNIP	3,006.4	3,007.5
PMPJKT	3,007.5	3,027.5

PLUG BACK Report Date: 10/3/2001 00:00

Component	Top MD (ft)	Btm MD (ft)
CEMENT	2,634.0	3,047.0

PLUG BACK Report Date: 9/7/1983 00:00

Component	Top MD (ft)	Btm MD (ft)
CEMENT	3,115.0	10,000.0

CONDUCTOR CASING Report Date: 4/18/1983 00:00

Item	OD (in)	Grade	Wt. (ppf)	TopMD (ft)	BtmMD (ft)
CASING JOINT(S)	20.000			19.0	60.0

SURFACE CASING Report Date: 6/3/1983 00:00

Item	OD (in)	Grade	Wt. (ppf)	TopMD (ft)	BtmMD (ft)
CASING JOINT(S)	13.375	K-55	54.50	19.0	510.0

PRODUCTION CASING Report Date: 6/8/1983 00:00

Item	OD (in)	Grade	Wt. (ppf)	TopMD (ft)	BtmMD (ft)
CASING JOINT(S)	9.625	K-55	40.00	19.0	1,586.0

LINER Report Date: 9/14/1983 00:00

Item	OD (in)	Grade	Wt. (ppf)	TopMD (ft)	BtmMD (ft)
LINER HANGER	7.000	K-55	23.00	2,972.0	2,972.5
PORTED SUB	7.000			2,972.5	2,975.5
SLOTTED LINER	7.000	K-55	23.00	2,975.5	3,020.5
SLOTTED LINER	7.000	K-55	23.00	3,020.5	3,054.5

LINER Report Date: 9/13/1983 00:00

Item	OD (in)	Grade	Wt. (ppf)	TopMD (ft)	BtmMD (ft)
CASING JOINT(S)	7.000	K-55	53.50	3,055.0	3,114.0
GUIDE SHOE	7.000	K-55	53.50	3,114.0	3,115.0

PRODUCTION CASING Report Date: 11/21/2001 00:00

Item	OD (in)	Grade	Wt. (ppf)	TopMD (ft)	BtmMD (ft)
CASING JOINT(S)	5.500	K-55	15.50	19.0	2,683.0
FLAG JOINT	5.500	K-55	15.50	2,683.0	2,695.4
CASING JOINT(S)	5.500	K-55	15.50	2,695.4	3,224.6
	5.500			3,224.6	3,225.1
CASING JOINT(S)	5.500	K-55	15.50	3,225.1	3,265.8
SET SHOE	5.500			3,265.8	3,266.7

Well: 3-88-3G-RD1 S/T/R: 34/30S/24E
Last Well Status: P&A

CASING CEMENT DETAIL
- - -
Sfc Csg. Cmt Vol.: 535 cf
Hole Size: 17.5
Top Job: no
Rtns to Sfc: 50 cf
TOC: sfc
- - -

Interm Csg. Cmt Vol.:
Hole Size:
Top Job:
Rtns to Sfc:
TOC:
- - -

Prod. Csg. Cmt Vol.: 2045 cf
Hole Size: 12.25
Top Job: no
Rtns to Sfc: 70 cf
TOC: sfc

Liner Cmt Vol.:
Hole Size:
Top Job:
Rtns to Sfc:
TOC:
- - -
Top of Formation:
UBA: 8495'
BLW: 9127'

Volume Behind Pipe:
1.3 Yield Assumed
Theoretical Calculations (TTOC)
JEP

OCCIDENTAL OF ELK HILLS INC

3-88-3G-RD2

Event: WELL MAINT - RIG
Event End: 3/27/2004 00:00
Sec. Reason:

Ground Level: 764.0ft
Datum: ORIGINAL KB @ 783.00ft (default)
API No.: 0402968653

Wellbore: ST 2
PBMD: 3,200.0ft
Btm TMD: 3,273.0ft
Spud Date: 4/18/1983 00:00
BH Coord X: 6,150,422.20uss ft
BH Coord Y: 2,281,709.94uss ft

Casing Shoes (ft) | Schematic (4/1/2004) | Openings Top/Btm/Type/Status

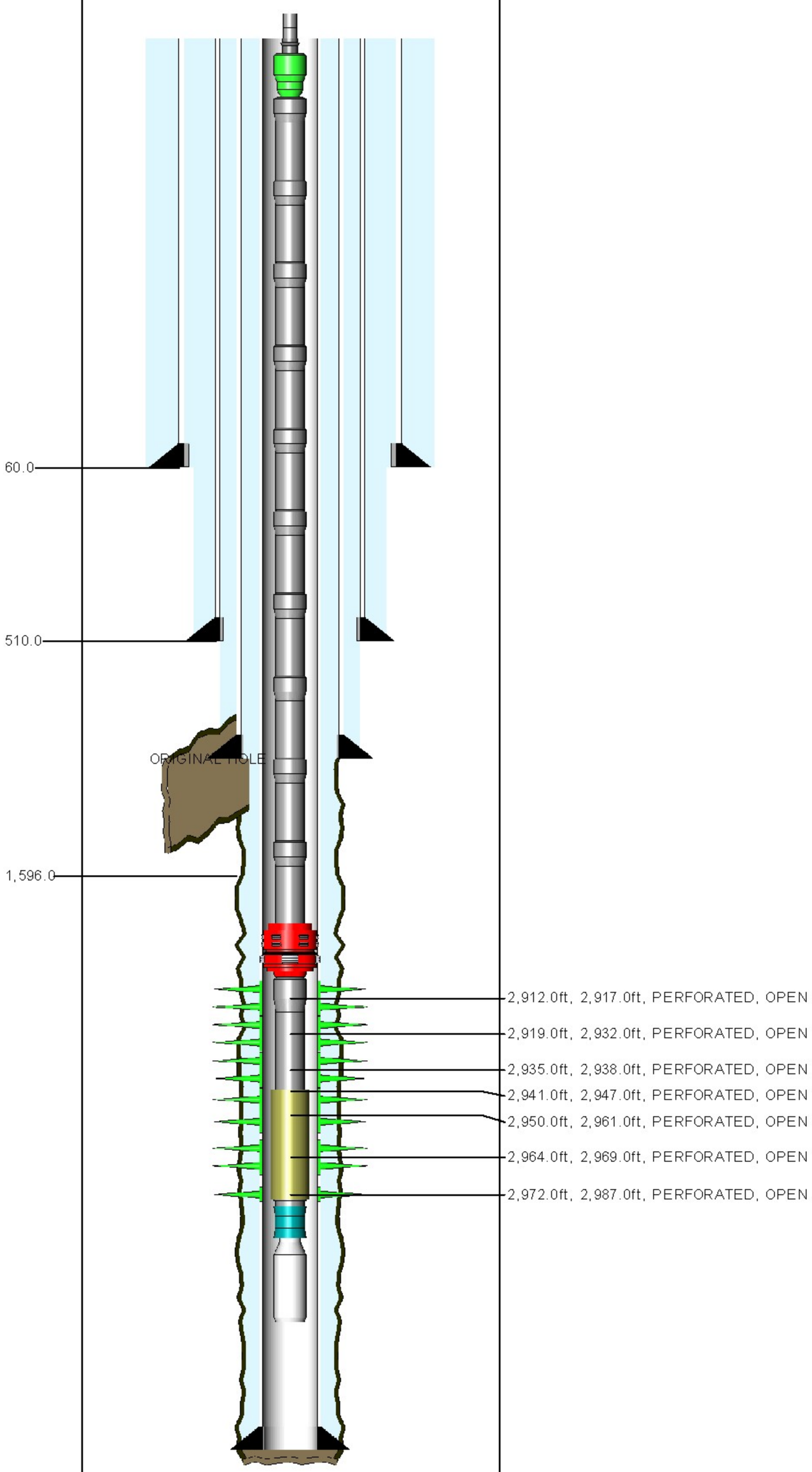

ROD STRING Report Date: 3/26/2004 00:00

Component	Top MD (ft)	Btm MD (ft)
POLROD	15.0	
PNYROD	45.0	69.0
ROD	69.0	3,009.0
RSTBAR	3,009.0	3,013.0
INSPMP	3,013.0	

TUBING STRING Report Date: 3/26/2004 00:00

Component	Top MD (ft)	Btm MD (ft)
TH-SGL	19.0	19.0
FATNIP	19.0	19.7
TBGJNT	19.7	2,878.3
AC	2,878.3	2,881.0
TBGJNT	2,881.0	2,943.9
BJ	2,943.9	2,975.0
TBGJNT	2,975.0	3,006.4
STNIP	3,006.4	3,007.5
PMPJKT	3,007.5	3,027.5

CONDUCTOR CASING Report Date: 4/18/1983 00:00

Item	OD (in)	Grade	Wt. (ppf)	TopMD (ft)	BtmMD (ft)
CASING JOINT(S)	20.000			19.0	60.0

SURFACE CASING Report Date: 6/3/1983 00:00

Item	OD (in)	Grade	Wt. (ppf)	TopMD (ft)	BtmMD (ft)
CASING JOINT(S)	13.375	K-55	54.50	19.0	510.0

PRODUCTION CASING Report Date: 6/8/1983 00:00

Item	OD (in)	Grade	Wt. (ppf)	TopMD (ft)	BtmMD (ft)
CASING JOINT(S)	9.625	K-55	40.00	19.0	1,586.0

PRODUCTION CASING Report Date: 11/21/2001 00:00

Item	OD (in)	Grade	Wt. (ppf)	TopMD (ft)	BtmMD (ft)
CASING JOINT(S)	5.500	K-55	15.50	19.0	2,683.0
FLAG JOINT	5.500	K-55	15.50	2,683.0	2,695.4
CASING JOINT(S)	5.500	K-55	15.50	2,695.4	3,224.6
	5.500			3,224.6	3,225.1
CASING JOINT(S)	5.500	K-55	15.50	3,225.1	3,265.8
SET SHOE	5.500			3,265.8	3,266.7

Well: 3-88-3G-RD2 S/T/R: 34/30S/24E

CASING CEMENT DETAIL
- - -
Sfc Csg. Cmt Vol.: 535 cf
Hole Size: 17.5
Top Job: no
Rtns to Sfc: 50 cf
TOC: sfc
- - -

Interm. Csg. Cmt Vol.: 2045 cf
Hole Size: 12.25
Top Job: no
Rtns to Sfc: 70 cf
TOC: sfc
- - -

Prod. Csg. Cmt Vol.: 510 cf (calc from 392 sx)
Hole Size: 7.321
Top Job: no
Rtns to Sfc: no
TTOC: sfc
- - -

Liner Cmt Vol.:
Hole Size:
Top Job:
Rtns to Sfc:
TOC:
- - -
Top of Formation:
UBA: 8495'
BLW: 9127'

Volume Behind Pipe:
1.3 Yield Assumed
Theoretical Calculations (TTOC)
JEP

OCCIDENTAL OF ELK HILLS INC

65X-35S

Event: WELL MAINT - RIGLESS
Event End:
Sec. Reason:

Ground Level: 678.0ft
Datum: ORIGINAL KB @ 687.00ft (default)
API No.: 0402955970

Wellbore: ORIGINAL HOLE
PBMD: 2,884.0ft
Btm TMD: 4,150.0ft
Spud Date: 8/5/1977 00:00
BH Coord X: 6,154,268.00uss ft
BH Coord Y: 2,288,640.00uss ft

Casing Shoes (ft) | Schematic (8/4/2009) | Openings Top/Btm/Type/Status

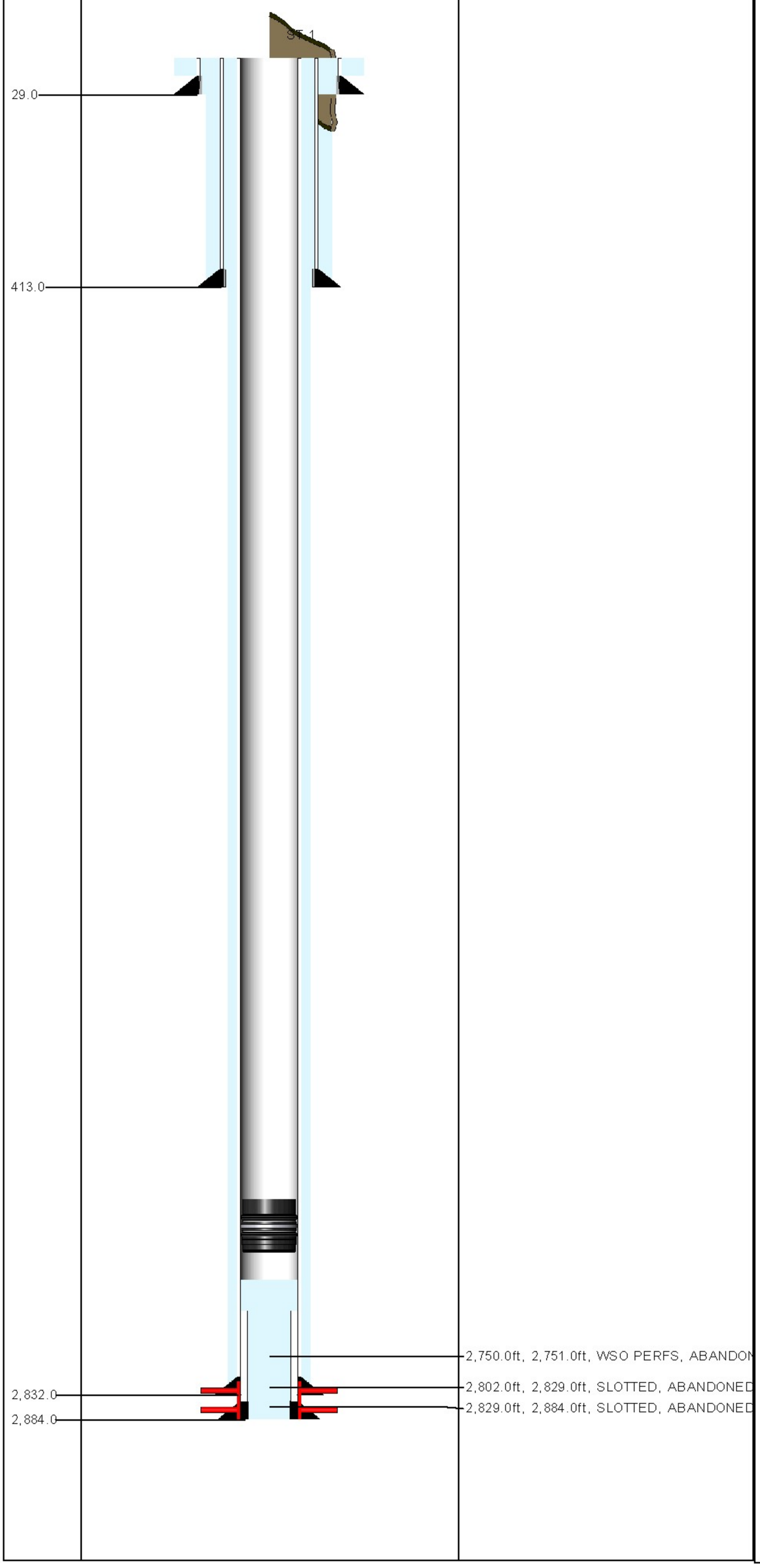

PLUG BACK Report Date: 5/18/2001 00:00

Component	Top MD (ft)	Btm MD (ft)
BP-DR	2,527.0	2,530.0

CONDUCTOR CASING Report Date: 8/5/1977 00:00

Item	OD (in)	Grade	Wt. (ppf)	TopMD (ft)	BtmMD (ft)
CASING JOINT(S)	16.000			9.0	29.0

SURFACE CASING Report Date: 9/5/1977 00:00

Item	OD (in)	Grade	Wt. (ppf)	TopMD (ft)	BtmMD (ft)
CASING JOINT(S)	10.750	K-55	40.50	9.0	411.8
GUIDE SHOE	10.750			411.8	413.0

PRODUCTION CASING Report Date: 9/10/1977 00:00

Item	OD (in)	Grade	Wt. (ppf)	TopMD (ft)	BtmMD (ft)
CASING JOINT(S)	7.000	K-55	23.00	9.0	2,829.6
GUIDE SHOE	7.000			2,829.6	2,832.0

LINER Report Date: 9/12/1977 00:00

Item	OD (in)	Grade	Wt. (ppf)	TopMD (ft)	BtmMD (ft)
LINER HANGER	6.366			2,796.0	2,800.7
STAGE COLLAR	5.500			2,800.7	2,801.7
SLOTTED LINER	5.500	K-55	20.00	2,801.7	2,843.3
SLOTTED LINER	5.500	K-55	20.00	2,843.3	2,883.8
BULL PLUG	5.500			2,883.8	2,884.0

Well: 65X-35S S/T/R: 36/30S/24E
Last Well Status: P & A
Status Date: 2/01/1998

CASING CEMENT DETAIL
- - -
Sfc Csg. Cmt Vol.: 400 cf
Hole Size: 14.75
Top Job: no
Rtns to Sfc: 80 cf
TOC: sfc
- - -

Interm Csg. Cmt Vol.: none - slotted liner
Hole Size:
Top Job:
Rtns to Sfc:
TOC:
- - -

Prod. Csg. Cmt Vol.: 1140 cf
Hole Size: 7.875
Top Job: no
Rtns to Sfc: 150 cf
TOC: sfc
- - -

Liner Cmt Vol.:
Hole Size:
Top Job:
Rtns to Sfc:
TOC:
- - -
Top of Formation:
UBA: 7360'
BLW: 7886'

Volume Behind Pipe:
1.3 Yield Assumed
Theoretical Calculations (TTOC)
JEP

OCCIDENTAL OF ELK HILLS INC

5-377-34S

Event: WELL MAINT - RIG
Event End:
Sec. Reason: Clean out & inspect csg

Ground Elev: 846.0ft
KB to Ground: 20.0ft
Datum: ORIGINAL KB @ 866.00ft (default)
API No.: 0402958916

Wellbore: ORIGINAL HOLE
Top TMD: 20.0ft
PBMD: 7,190.0ft
Btm TMD: 11,950.0ft
Spud Date: 4/6/1979 00:00
BH Coord X: 6,149,561.69uss ft BH Coord Y: 2,288,264.43uss

Casing Shoes (ft) | Schematic (8/4/2009) | Openings Top/Btm/Type/Status

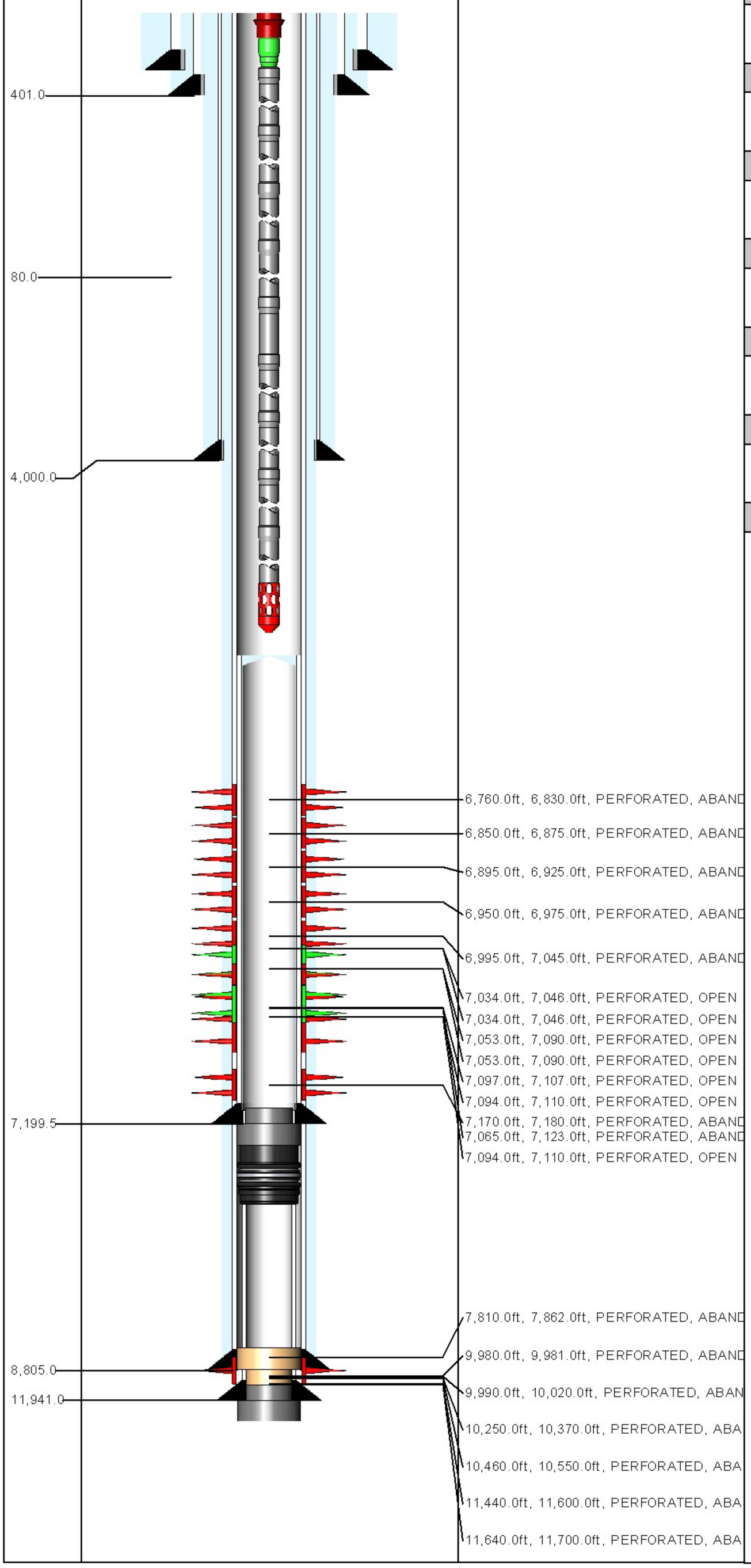

TUBING STRING Report Date: 9/5/2008 00:00

Component	Top MD (ft)	Btm MD (ft)
TH-DBB	20.0	20.6
FATNIP	20.6	21.3
CAS	21.3	5,767.4
PERFJT	5,767.4	5,771.6
BULPLG	5,771.6	5,772.0

PLUG BACK Report Date: 7/27/2001 00:00

Component	Top MD (ft)	Btm MD (ft)
CEMENT	7,190.0	7,199.5

PLUG BACK Report Date: 7/23/2001 00:00

Component	Top MD (ft)	Btm MD (ft)
CEMENT	7,199.5	7,200.0

PLUG BACK Report Date: 7/13/2001 00:00

Component	Top MD (ft)	Btm MD (ft)
BP-DR	7,200.0	7,203.0

PLUG BACK Report Date: 7/14/2001 00:00

Component	Top MD (ft)	Btm MD (ft)
FILL	7,225.0	8,682.0

PLUG BACK Report Date: 7/14/2001 00:00

Component	Top MD (ft)	Btm MD (ft)
FILL	8,682.0	11,800.0

PLUG BACK Report Date: 5/26/1979 00:00

Component	Top MD (ft)	Btm MD (ft)
CEMENT	11,800.0	11,941.0

PLUG BACK Report Date: 5/25/1979 00:00

Component	Top MD (ft)	Btm MD (ft)
CEMENT	11,941.0	11,950.0

CONDUCTOR CASING Report Date: 4/6/1979 00:00

Item Description	Btm MD(ft)
CASING JOINT(S) 26 in,	60.0

SURFACE CASING Report Date: 4/7/1979 00:00

Item Description	Btm MD(ft)
CASING JOINT(S) 20 in,	401.0

INTERMEDIATE CASING Report Date: 4/8/1979 00:00

Item Description	Btm MD (ft)
CASING JOINT(S) 13.375 in,	3,956.9
FLOAT COLLAR 13.375 in,	3,958.9
CASING JOINT(S) 13.375 in,	3,999.0
FLOAT SHOE 13.375 in,	4,000.0

PRODUCTION CASING Report Date: 4/10/1979 00:00

Item Description	Btm MD (ft)
CASING JOINT(S) 9.625 in, , N-80, 53.5	121.0
CASING JOINT(S) 9.625 in, , N-80, 43.5	1,184.0
CASING JOINT(S) 9.625 in, , N-80, 40	2,695.0
CASING JOINT(S) 9.625 in, , N-80, 40	3,803.0
CASING JOINT(S) 9.625 in, , N-80, 47	5,823.0
CASING JOINT(S) 9.625 in, , N-80, 53.5	8,726.2
FLOAT COLLAR 9.625 in, , N-80, 53.5	8,728.5
CASING JOINT(S) 9.625 in, , N-80, 53.5	8,763.1
CASING JOINT(S) 9.625 in, , N-80, 53.5	8,802.4
FLOAT SHOE 9.625 in, , N-80, 53.5	8,805.0

INNER LINER Report Date: 7/23/2001 00:00

Item Description	Btm MD (ft)
LINER HANGER 8.435 in, , 26	6,007.7
CASING JOINT(S) 7 in, , N-80, 26	7,196.2
LANDING COLLAR 7 in, , N-80, 26	7,197.1
FLOAT COLLAR 7 in, , N-80, 26	7,198.1
FLOAT SHOE 7 in, , N-80, 26	7,199.5

LINER Report Date: 5/25/1979 00:00

Item Description	Btm MD (ft)
CASING JOINT(S) 7 in, , N-80, 32	9,354.0
CASING JOINT(S) 7 in, , S-135, 32	11,853.1
FLOAT COLLAR 7 in, , S-135, 32	11,854.1
CASING JOINT(S) 7 in, , S-135, 32	11,895.3
CASING JOINT(S) 7 in, , S-135, 32	11,939.2
FLOAT SHOE 7 in, , S-135, 32	11,941.0

S/T/R: 5-377-34S 34S/30S/24E

CASING CEMENT DETAIL
- - -
Sfc Csg. Cmt Vol.: 576cf
Hole Size: 24"
Top Job:
Rtns to Sfc: Yes
TOC: Sfc
- - -
Int. Csg. Cmt Vol.: 3895cf
Hole Size: 17-1/2"
Top Job: Yes, (172cf)
Rtns to Sfc:
TOC:
- - -
Prod Csg. Cmt Vol.: 3390cf
Hole Size: 12-1/4"
Top Job:
Rtns to Sfc: None
TOC: TTOC at Surface
- - -
Liner Cmt Vol.: 980cf
Hole Size: 8-3/4"
Top Job:
Rtns to Sfc: None
TOC: TTOC @ 3442'

Top of Formation:
UBA: 6732'
BLW: 7128'

Volume Behind Pipe
1.3 Yield Assumed on
Theoretical Calculations

Event: EXPL COMPLETION
Event End:
Sec. Reason:
End Status:
Well Classification: EXPLORATION - CLASS III

OCCIDENTAL OF ELK HILLS INC

655-34S

Water Depth: 819.6ft
Datum: ORIGINAL KB @ 844.60ft (default)
API No.: 0403038819

Wellbore: ORIGINAL HOLE
PBMD: 11,604.0ft
Btm TMD: 11,700.0ft
Spud Date: 5/19/2009 02:30
BH Coord X: 6,148,480.54uss ft
BH Coord Y: 2,288,441.42uss ft

Casing Shoes (ft)	Schematic (9/9/2009)	Openings Top/Btm/Type/Status

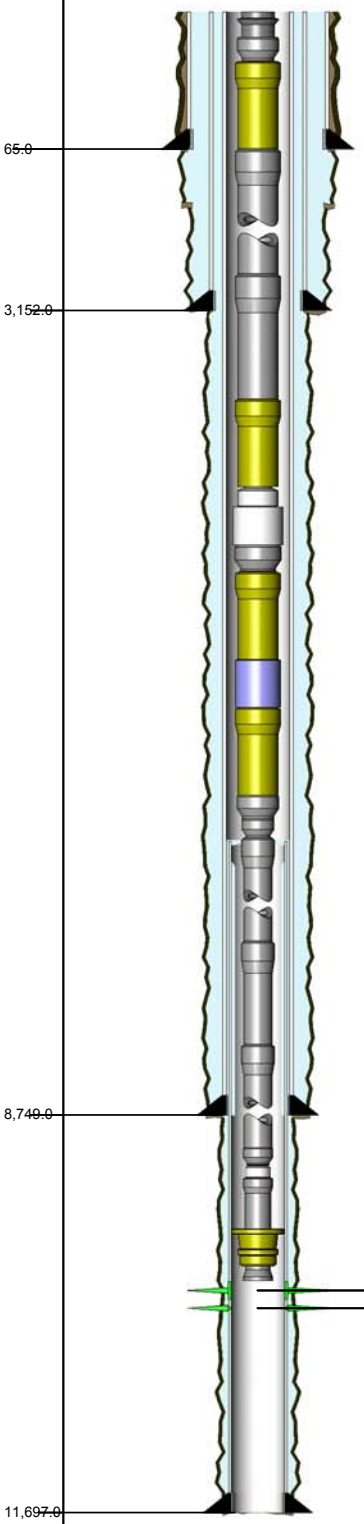

9,332.0ft, 9,510.0ft, PERFORATED, OPEN
9,588.0ft, 9,616.0ft, PERFORATED, OPEN

TUBING STRING Report Date: 8/24/2009 00:00

Component	Top MD (ft)	Btm MD (ft)
TH-SGL	25.0	25.6
XO	25.6	29.4
PUPJNT	29.4	33.6
CAS	33.6	8,339.9
PUPJNT	8,339.9	8,344.1
SBLOC	8,344.1	8,345.1
SBEXT	8,345.1	8,354.4
XO	8,354.4	8,355.0
PUPJNT	8,355.0	8,365.2
NOGO	8,365.2	8,366.5
PUPJNT	8,366.5	8,372.9
XO	8,372.9	8,374.2
XO	8,374.2	8,375.1
CAS	8,375.1	9,240.8
XO	9,240.8	9,241.7
DETINT	9,241.7	9,242.4
CAS	9,242.4	9,304.9
FIREHD	9,304.9	9,310.0
SPCSUB	9,310.0	9,321.8

CONDUCTOR CASING Report Date: 5/11/2009 00:00

Item	OD (in)	Grade	Wt. (ppf)	TopMD (ft)	BtmMD (ft)
CASING JOINT(S)	14.000			25.0	65.0

SURFACE CASING Report Date: 5/21/2009 00:00

Item	OD (in)	Grade	Wt. (ppf)	TopMD (ft)	BtmMD (ft)
CASING JOINT(S)	9.625	N-80	40.00	25.0	1,018.5
DIVERTER SUB	9.625	N-80	40.00	1,018.5	1,021.1
CASING JOINT(S)	9.625	N-80	40.00	1,021.1	3,108.8
FLOAT COLLAR	9.625	N-80	40.00	3,108.8	3,110.6
CASING JOINT(S)	9.625	N-80	40.00	3,110.6	3,150.3
GUIDE SHOE	9.625	N-80	40.00	3,150.3	3,152.0

PRODUCTION CASING Report Date: 6/3/2009 00:00

Item	OD (in)	Grade	Wt. (ppf)	TopMD (ft)	BtmMD (ft)
CASING MANDREL	7.000	P 110	26.00	25.0	28.8
CASING JOINT(S)	7.000	P 110	26.00	28.8	3,696.2
STAGE COLLAR	7.000	P 110	26.00	3,696.2	3,699.7
CASING JOINT(S)	7.000	P 110	26.00	3,699.7	5,195.5
CASING JOINT(S)	7.000	P 110	29.00	5,195.5	8,652.1
FLOAT COLLAR	7.000	P 110	29.00	8,652.1	8,653.0
CASING JOINT(S)	7.000	P 110	29.00	8,653.0	8,747.8
FLOAT SHOE	7.000	P 110	29.00	8,747.8	8,749.0

PRODUCTION LINER Report Date: 6/22/2009 00:00

Item	OD (in)	Grade	Wt. (ppf)	TopMD (ft)	BtmMD (ft)
SETTING SLEEVE	5.800		15.10	8,432.0	8,442.4
LINER HANGER PACKER	5.865		15.10	8,442.4	8,444.9
LINER HANGER	5.864		15.10	8,444.9	8,451.5
CROSSOVER	4.536	P 110	15.10	8,451.5	8,453.0
CASING JOINT(S)	4.500	P 110	15.10	8,453.0	11,603.9
LANDING COLLAR	4.500	P 110	15.10	11,603.9	11,605.5
CASING JOINT(S)	4.500	P 110	15.10	11,605.5	11,649.2
FLOAT COLLAR	4.500	P 110	15.10	11,649.2	11,650.3
CASING JOINT(S)	4.500	P 110	15.10	11,650.3	11,695.1
FLOAT SHOE	4.500	P 110	15.10	11,695.1	11,697.0

Well: 655-34S S/T/R: 34S/30S/24E

CASING CEMENT DETAIL
- - -
Sfc Csg. Cmt Vol.: 2601 cf
Hole Size: 12.25"
Top Job: no
Rtns to Sfc:
TOC:
- - -

Interm Csg. Cmt Vol.:
Hole Size:
Top Job:
Rtns to Sfc: 107 bbls
TOC: sfc
- - -

Prod. Csg. Cmt Vol.: 1586 cf
Hole Size: 8.75"
Top Job: no
Rtns to Sfc: partial
TOC: sfc
- - -

Liner Cmt Vol.: 415 cf
Hole Size: 6"
Top Job: no
Rtns to Sfc: no
TTOC: TOL
- - -
Top of Formation:
UBA: 6705'
BLW: 7076'

Volume Behind Pipe:
1.3 Yield Assumed
Theoretical Calculations (TTOC)

OCCIDENTAL OF ELK HILLS INC

65X-35S

Event: WELL MAINT - RIGLESS
Event End:
Sec. Reason:

Ground Level: 678.0ft
Datum: ORIGINAL KB @ 687.00ft (default)
API No.: 0402955970

Wellbore: ORIGINAL HOLE
PBMD: 2,884.0ft
Btm TMD: 4,150.0ft
Spud Date: 8/5/1977 00:00
BH Coord X: 6,154,268.00uss ft
BH Coord Y: 2,288,640.00uss ft

Casing Shoes (ft)	Schematic (8/26/2009)	Openings Top/Btm/Type/Status
29.0		
413.0		
		2,750.0ft, 2,751.0ft, WSO PERFS, ABANDONED
2,832.0		2,802.0ft, 2,829.0ft, SLOTTED, ABANDONED
2,884.0		2,829.0ft, 2,884.0ft, SLOTTED, ABANDONED

TUBING STRING Report Date: 6/18/2006 00:00

Component	Top MD (ft)	Btm MD (ft)
TH-DBB	9.0	9.6
FATNIP	9.6	10.3
TBGJNT	10.3	2,294.8
GLM	2,294.8	2,296.9
TBGJNT	2,296.9	4,018.3
GLM	4,018.3	4,020.3
CAS	4,020.3	5,205.6
GLM	5,205.6	5,207.6
CAS	5,207.6	5,972.8
GLM	5,972.8	5,974.8
CAS	5,974.8	6,006.0
PKR-S	6,006.0	6,009.9
WLREG	6,009.9	6,010.4

PLUG BACK Report Date: 5/18/2001 00:00

Component	Top MD (ft)	Btm MD (ft)
BP-DR	2,527.0	2,530.0

CONDUCTOR CASING Report Date: 8/5/1977 00:00

em	OD (in)	Grade	Wt. (ppf)	TopMD (ft)	BtmMD (ft)
ASING JOINT(S)	16.000			9.0	29.0

SURFACE CASING Report Date: 9/5/1977 00:00

em	OD (in)	Grade	Wt. (ppf)	TopMD (ft)	BtmMD (ft)
ASING JOINT(S)	10.750	K-55	40.50	9.0	411.8
UIDE SHOE	10.750			411.8	413.0

PRODUCTION CASING Report Date: 9/10/1977 00:00

em	OD (in)	Grade	Wt. (ppf)	TopMD (ft)	BtmMD (ft)
ASING JOINT(S)	7.000	K-55	23.00	9.0	2,829.6
UIDE SHOE	7.000			2,829.6	2,832.0

LINER Report Date: 9/12/1977 00:00

em	OD (in)	Grade	Wt. (ppf)	TopMD (ft)	BtmMD (ft)
NER HANGER	6.366			2,796.0	2,800.7
TAGE COLLAR	5.500			2,800.7	2,801.7
LOTTED LINER	5.500	K-55	20.00	2,801.7	2,843.3
LOTTED LINER	5.500	K-55	20.00	2,843.3	2,883.8
ULL PLUG	5.500			2,883.8	2,884.0

PRODUCTION CASING Report Date: 7/18/2001 00:00

em	OD (in)	Grade	Wt. (ppf)	TopMD (ft)	BtmMD (ft)
ASING JOINT(S)	4.500	P-110	11.60	9.0	6,872.1
LOAT COLLAR	4.500			6,872.1	6,873.3
ASING JOINT(S)	4.500	P-110	11.60	6,873.3	6,953.7
LOAT SHOE	4.500			6,953.7	6,955.0

Well: 65X-35S S/T/R: 35S/30S/24E

Last Well Status: P & A
Status Date: 2/01/1998

CASING CEMENT DETAIL
- - -
Sfc Csg. Cmt Vol.: 400 cf
Hole Size: 14.75
Top Job: no
Rtns to Sfc: 80 cf
TOC: sfc
- - -

Interm Csg. Cmt Vol.:
Hole Size:
Top Job:
Rtns to Sfc:
TOC:
- - -

Prod. Csg. Cmt Vol.: 1140 cf
Hole Size: 7.875
Top Job: no
Rtns to Sfc: 150 cf
TOC: sfc
- - -

Liner Cmt Vol.: none - slotted
Hole Size: 13"
Top Job:
Rtns to Sfc:
TOC:
- - -
Top of Formation:
UBA: N/A
BLW: N/A

Volume Behind Pipe:
1.3 Yield Assumed
Theoretical Calculations (TTOC)
JEP

OCCIDENTAL OF ELK HILLS INC

65X-365D-35S-RD1

Event: WELL MAINT - RIGLESS
Event End:
Sec. Reason:

Ground Level: 678.0ft
Datum: ORIGINAL KB @ 687.00ft (default)
API No.: 0402955970

Wellbore: ST 1
PBMD: 6,930.0ft
Btm TMD: 6,956.0ft
Spud Date: 8/5/1977 00:00
BH Coord X: 6,154,268.19uss ft
BH Coord Y: 2,288,639.92uss ft

Casing Shoes (ft)	Schematic (8/26/2009)	Openings Top/Btm/Type/Status

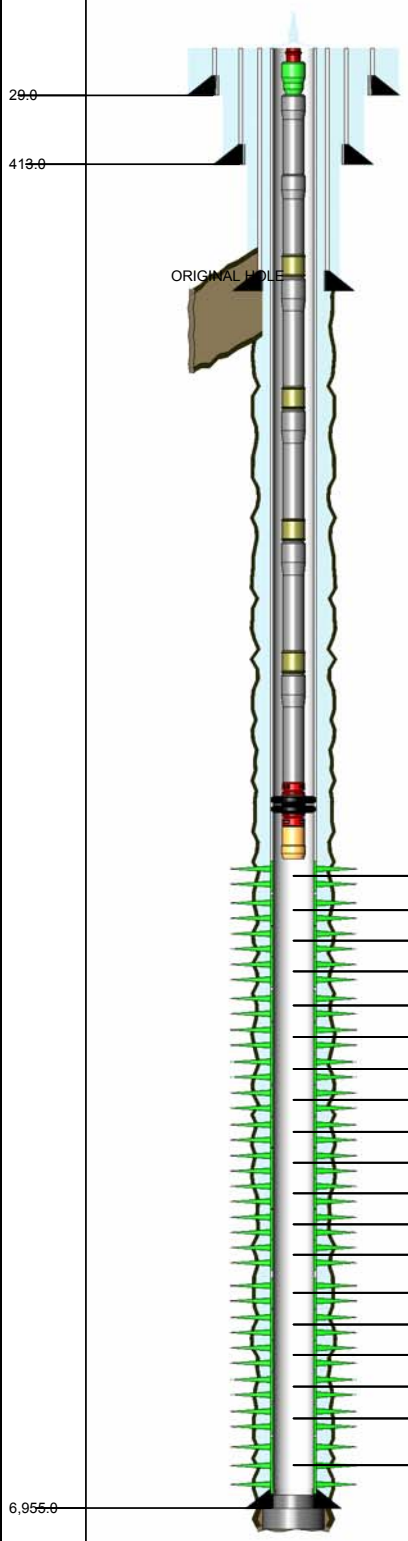

6,070.0ft, 6,078.0ft, PERFORATED, OPEN
6,175.0ft, 6,181.0ft, PERFORATED, OPEN
6,189.0ft, 6,195.0ft, PERFORATED, OPEN
6,207.0ft, 6,215.0ft, PERFORATED, OPEN
6,306.0ft, 6,312.0ft, PERFORATED, OPEN
6,338.0ft, 6,347.0ft, PERFORATED, OPEN
6,385.0ft, 6,390.0ft, PERFORATED, OPEN
6,408.0ft, 6,454.0ft, PERFORATED, OPEN
6,487.0ft, 6,494.0ft, PERFORATED, OPEN
6,507.0ft, 6,528.0ft, PERFORATED, OPEN
6,532.0ft, 6,551.0ft, PERFORATED, OPEN
6,563.0ft, 6,567.0ft, PERFORATED, OPEN
6,568.0ft, 6,578.0ft, PERFORATED, OPEN
6,716.0ft, 6,730.0ft, PERFORATED, OPEN
6,752.0ft, 6,759.0ft, PERFORATED, OPEN
6,761.0ft, 6,782.0ft, PERFORATED, OPEN
6,799.0ft, 6,824.0ft, PERFORATED, OPEN
6,836.0ft, 6,842.0ft, PERFORATED, OPEN
6,865.0ft, 6,898.0ft, PERFORATED, OPEN

TUBING STRING — Report Date: 6/18/2006 00:00

Component	Top MD (ft)	Btm MD (ft)
TH-DBB	9.0	9.6
FATNIP	9.6	10.3
TBGJNT	10.3	2,294.8
GLM	2,294.8	2,296.9
TBGJNT	2,296.9	4,018.3
GLM	4,018.3	4,020.3
CAS	4,020.3	5,205.6
GLM	5,205.6	5,207.6
CAS	5,207.6	5,972.8
GLM	5,972.8	5,974.8
CAS	5,974.8	6,006.0
PKR-S	6,006.0	6,009.9
WLREG	6,009.9	6,010.4

PLUG BACK — Report Date: 8/13/2001 00:00

Component	Top MD (ft)	Btm MD (ft)
CEMENT	6,930.0	6,955.0

PLUG BACK — Report Date: 7/18/2001 00:00

Component	Top MD (ft)	Btm MD (ft)
CEMENT	6,955.0	6,956.0

CONDUCTOR CASING — Report Date: 8/5/1977 00:00

em	OD (in)	Grade	Wt. (ppf)	TopMD (ft)	BtmMD (ft)
ASING JOINT(S)	16.000			9.0	29.0

SURFACE CASING — Report Date: 9/5/1977 00:00

em	OD (in)	Grade	Wt. (ppf)	TopMD (ft)	BtmMD (ft)
ASING JOINT(S)	10.750	K-55	40.50	9.0	411.8
UIDE SHOE	10.750			411.8	413.0

PRODUCTION CASING — Report Date: 9/10/1977 00:00

em	OD (in)	Grade	Wt. (ppf)	TopMD (ft)	BtmMD (ft)
ASING JOINT(S)	7.000	K-55	23.00	9.0	2,829.6
UIDE SHOE	7.000			2,829.6	2,832.0

PRODUCTION CASING — Report Date: 7/18/2001 00:00

em	OD (in)	Grade	Wt. (ppf)	TopMD (ft)	BtmMD (ft)
ASING JOINT(S)	4.500	P-110	11.60	9.0	6,872.1
LOAT COLLAR	4.500			6,872.1	6,873.3
ASING JOINT(S)	4.500	P-110	11.60	6,873.3	6,953.7
LOAT SHOE	4.500			6,953.7	6,955.0

Well: 65X-365D-35S-RD1 S/T/R: 35S/30S/24E

CASING CEMENT DETAIL
- - -
Sfc Csg. Cmt Vol.: 400 cf
Hole Size: 14.75
Top Job: no
Rtns to Sfc: 80 cf
TOC: sfc
- - -

Interm Csg. Cmt Vol.: 1140 cf
Hole Size: 7.875"
Top Job: no
Rtns to Sfc: 150 cf
TOC: sfc
- - -

Prod. Csg. Cmt Vol.: 1007 cf
Hole Size: 6.25
Top Job: no
Rtns to Sfc: 67 cf
TOC: sfc
- - -

Liner Cmt Vol.:
Hole Size:
Top Job:
Rtns to Sfc:
TOC:
- - -
Top of Formation:
UBA: N/A
BLW: N/A

Volume Behind Pipe:
1.3 Yield Assumed
Theoretical Calculations (TTOC)
JEP

OCCIDENTAL OF ELK HILLS INC

82-382D-4G

Event: DEV DRILLING
Event End: 12/6/2002 00:00
Sec. Reason:

Ground Level: 1,072.0ft
Datum: ORIGINAL KB @ 1,082.00ft (NABORS 472)(default)
API No.: 0402954085

Wellbore: ORIGINAL HOLE
PBMD: 2,988.0ft
Btm TMD: 3,220.0ft
Spud Date: 7/29/1976 00:00
BH Coord X: 6,145,112.54uss ft
BH Coord Y: 2,285,612.86uss ft

Casing Shoes (ft)	Schematic (12/6/2002)	Openings Top/Btm/Type/Status

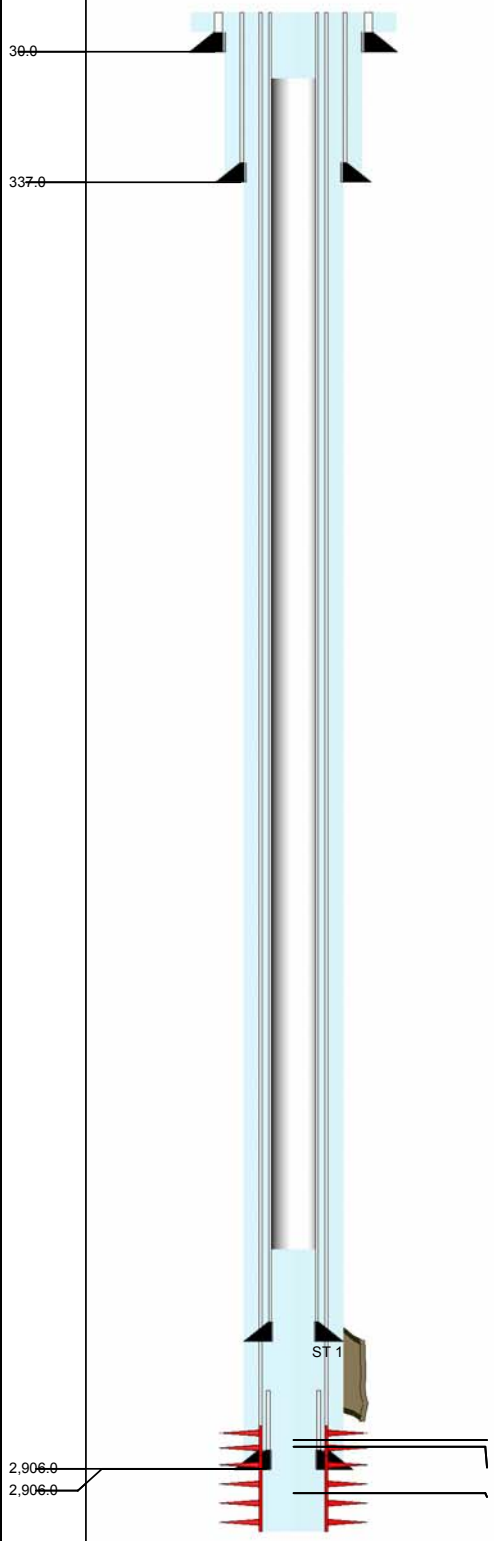

2,876.0ft, 2,902.0ft, PERFORATED, ABANDONED
2,895.0ft, 2,895.0ft, WSO PERFS, CLOSED
2,902.0ft, 2,988.0ft, PERFORATED, ABANDONED

CONDUCTOR CASING Report Date: 7/29/1976 00:00

em	OD (in)	Grade	Wt. (ppf)	TopMD (ft)	BtmMD (ft)
ASING JOINT(S)	16.000			10.0	30.0

SURFACE CASING Report Date: 11/28/1976 00:00

em	OD (in)	Grade	Wt. (ppf)	TopMD (ft)	BtmMD (ft)
ASING JOINT(S)	10.750	K-55	40.50	10.0	337.0

PRODUCTION CASING Report Date: 12/3/1976 00:00

em	OD (in)	Grade	Wt. (ppf)	TopMD (ft)	BtmMD (ft)
ASING JOINT(S)	7.000	K-55	23.00	10.0	2,906.0

LINER Report Date: 12/6/1976 00:00

em	OD (in)	Grade	Wt. (ppf)	TopMD (ft)	BtmMD (ft)
ASING JOINT(S)	5.500	K-55	20.00	2,864.0	2,906.0

PRODUCTION CASING Report Date: 9/7/2002 00:00

em	OD (in)	Grade	Wt. (ppf)	TopMD (ft)	BtmMD (ft)
ASING JOINT(S)	5.000	N-80	15.00	10.0	3,859.7
AG JOINT	5.000	N-80	15.00	3,859.7	3,879.7
ASING JOINT(S)	5.000	N-80	15.00	3,879.7	4,617.3
EMENT STAGE TOOL	5.000			4,617.3	4,619.3
ASING JOINT(S)	5.000	N-80	15.00	4,619.3	4,824.3
ANDING COLLAR	5.000			4,824.3	4,824.3
ASING JOINT(S)	5.000	N-80	15.00	4,824.3	4,865.4
LOAT COLLAR	5.000			4,865.4	4,866.6
ASING JOINT(S)	5.000	N-80	15.00	4,866.6	4,907.6
LOAT SHOE	5.000			4,907.6	4,909.0

Well: 82-4G S/T/R: 4G/31S/24E

Last Well Status: P&A
Status Date: 08/13/2002

CASING CEMENT DETAIL
- - -
Sfc Csg. Cmt Vol. (cf): 315
Hole Size (in.): 14.75
Top Job: no
Rtns to Sfc (cf): 30
TOC (ft): sfc
- - -

Interm Csg. Cmt Vol. (cf):
Hole Size (in.):
Top Job:
Rtns to Sfc (cf):
TOC (ft):
- - -

Prod. Csg. Cmt Vol. (cf): 1060
Hole Size (in.): 9.875
Top Job: no
Rtns to Sfc (cf): 80
TOC (ft): sfc

Liner Cmt Vol. (cf):
Hole Size (in.):
Top Job:
Rtns to Sfc (cf):
TOC (ft):
- - -
Top of Formation:
UBA: N/A
BLW: N/A

Volume Behind Pipe:
1.3 Yield Assumed
Theoretical Calculations (TTOC)

OCCIDENTAL OF ELK HILLS INC

82-382D-4G-RD1

Event: DEV DRILLING
Event End: 12/6/2002 00:00
Sec. Reason:

Ground Level: 1,072.0ft
Datum: ORIGINAL KB @ 1,082.00ft (NABORS 472)(default)
API No.: 0402954085

Wellbore: ST 1
PBMD: 0.0ft
Btm TMD: 7,580.0ft
Spud Date: 7/29/1976 00:00
BH Coord X: 6,144,974.54uss ft
BH Coord Y: 2,285,704.18uss ft

Casing Shoes (ft)	Schematic (12/6/2002)	Openings Top/Btm/Type/Status

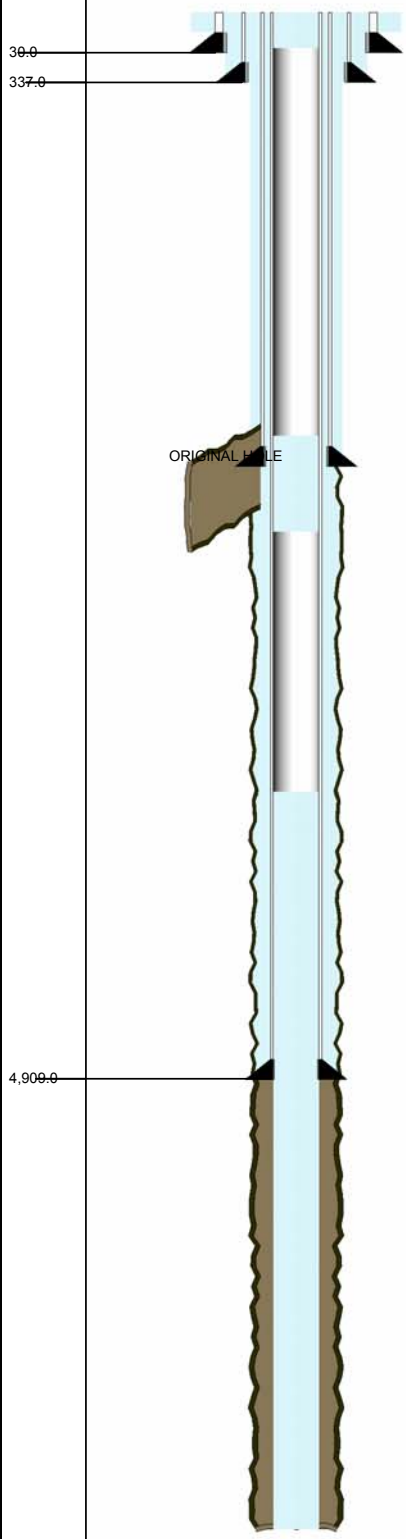

CONDUCTOR CASING Report Date: 7/29/1976 00:00

em	OD (in)	Grade	Wt. (ppf)	TopMD (ft)	BtmMD (ft)
ASING JOINT(S)	16.000			10.0	30.0

SURFACE CASING Report Date: 11/28/1976 00:00

em	OD (in)	Grade	Wt. (ppf)	TopMD (ft)	BtmMD (ft)
ASING JOINT(S)	10.750	K-55	40.50	10.0	337.0

PRODUCTION CASING Report Date: 12/3/1976 00:00

em	OD (in)	Grade	Wt. (ppf)	TopMD (ft)	BtmMD (ft)
ASING JOINT(S)	7.000	K-55	23.00	10.0	2,906.0

PRODUCTION CASING Report Date: 9/7/2002 00:00

em	OD (in)	Grade	Wt. (ppf)	TopMD (ft)	BtmMD (ft)
ASING JOINT(S)	5.000	N-80	15.00	10.0	3,859.7
LAG JOINT	5.000	N-80	15.00	3,859.7	3,879.7
ASING JOINT(S)	5.000	N-80	15.00	3,879.7	4,617.3
EMENT STAGE TOOL	5.000			4,617.3	4,619.3
ASING JOINT(S)	5.000	N-80	15.00	4,619.3	4,824.3
ANDING COLLAR	5.000			4,824.3	4,824.3
ASING JOINT(S)	5.000	N-80	15.00	4,824.3	4,865.4
LOAT COLLAR	5.000			4,865.4	4,866.6
ASING JOINT(S)	5.000	N-80	15.00	4,866.6	4,907.6
LOAT SHOE	5.000			4,907.6	4,909.0

Well: 82-382D-4G-RD1 S/T/R: 4G/31S/24E

CASING CEMENT DETAIL
- - -
Sfc Csg. Cmt Vol. (cf): 315
Hole Size (in.): 14.75
Top Job: no
Rtns to Sfc (cf): 30
TOC (ft): sfc
- - -

Interm Csg. Cmt Vol. (cf):
Hole Size (in.):
Top Job:
Rtns to Sfc (cf):
TOC (ft):
- - -

7" Prod. Csg. Cmt Vol. (cf): 1060
Hole Size (in.): 9.875
Top Job: no
Rtns to Sfc (cf): 80
TOC (ft): sfc

5" Prod. Csg. Cmt Vol. (cf): 663
Hole Size (in.): 7
Top Job: no
Rtns to Sfc (cf): 0
TTOC (ft): sfc
- - -
Top of Formation:
UBA: N/A
BLW: N/A

Volume Behind Pipe:
1.3 Yield Assumed
Theoretical Calculations (TTOC)

Wells Within 1/4 Mile Of Permit Area With No Penetration Of Reef Ridge Shale

WellName	API	Status	Completion Yr	Sec	TD (TVDss)	Surface X	Surface Y
12-10G	04029291880000	PROD_OIL_P & A	1945	10G	-2150	6145868	2280530
32-10G	04029291930000	PROD_OIL_P & A	1951	10G	-2212	6147102	2280440
52-10G	04029291980002	MON_PSI_APPROVED	1951	10G	-2350	6148409	2280468
81-10G	04029292030000	PROD_OIL_P & A	1951	10G	-2297	6150336	2281051
31-10G	04029522920000	PROD_OIL_P & A	1975	10G	-2483	6147108	2281096
11-10G	04029667620000	PROD_OIL_P & A	1982	10G	-2142	6145790	2281102
22-10G	04029672670000	INJ_GAS_P & A	1982	10G	-2260	6146400	2280472
31X-10G	04029672080000	PROD_OIL_P & A	1982	10G	-2230	6147110	2281370
11NE-10G	04029719140000	PROD_OIL_P & A	1984	10G	-2056	6146128	2281373
11N-10G	04029771420000	PROD_OIL_P & A	1986	10G	-2098	6145786	2281405
11NE-10G-RD1	04029719140100	PROD_OIL_P & A	1986	10G	-1133	6146128	2281373
11SW-10G	04029794600000	PROD_OIL_P & A	1987	10G	-2210	6145575	2280942
11SW-10G-RD1	04029794600100	PROD_OIL_P & A	1987	10G	-2062	6145575	2280942
11WX-10G	04029832990000	PROD_OIL_ACTIVE	1988	10G	-2135	6145485	2281413
51-10G	04029821380000	PROD_OIL_P & A	1988	10G	-2475	6148440	2281055
51-10G-RD1	04029821380100	PROD_OIL_INACTIVE	1988	10G	-2215	6148440	2281055
42-10G	04029858400000	PROD_OIL_P & A	1991	10G	-2405	6147667	2280638
42-10G-RD1	04029858400100	PROD_OIL_P & A	1991	10G	-2346	6147667	2280638
42-10G-RD2	04029858400200	PROD_OIL_P & A	1991	10G	-2201	6147667	2280638
11E-10G	04030117560000	PROD_OIL_ACTIVE	1998	10G	-2188	6146085	2281085
42E-10G	04030119780000	PROD_OIL_INACTIVE	1998	10G	-2347	6147659	2280710
51E-10G	04030119070000	PROD_OIL_ACTIVE	1998	10G	-2332	6148734	2281333
42S-10G	04030131880000	PROD_OIL_ACTIVE	1999	10G	-2377	6147740	2280520
81-10G-RD1	04029292030100	PROD_OIL_P & A	1999	10G	-2422	6150336	2281051
81-10G-RD2	04029292030201	PROD_OIL_INACTIVE	1999	10G	-2439	6150336	2281051
11-10G-RD1	04029667620100	PROD_OIL_INACTIVE	2001	10G	-2342	6145790	2281102
12-10G-RD1	04029291880100	PROD_OIL_ACTIVE	2001	10G	-2452	6145868	2280530
21-10G	04030187210000	PROD_OIL_INACTIVE	2001	10G	-2457	6146570	2281253
31X-10G-RD1	04029672080100	PROD_OIL_INACTIVE	2001	10G	-2442	6147110	2281370
41N-10G	04030187220000	PROD_OIL_ACTIVE	2001	10G	-2454	6147670	2281343
41SE-10G	04030213760000	PROD_OIL_INACTIVE	2002	10G	-2418	6147888	2281008
42-10G-RD3	04029858400300	PROD_OIL_ACTIVE	2002	10G	-2415	6147667	2280638
11SW-10G-RD2	04029794600200	PROD_OIL_INACTIVE	2003	10G	-2171	6145575	2280942
21SW-10G	04030228320000	PROD_OIL_ACTIVE	2003	10G	-2350	6146352	2281007
31-10G-RD1	04029522920100	PROD_OIL_P & A	2003	10G	-2391	6147108	2281096
31-10G-RD2	04029522920200	PROD_OIL_INACTIVE	2003	10G	-2350	6147108	2281096
42SE-10G	04030225910000	PROD_OIL_P & A	2003	10G	-2349	6147996	2280502
42SE-10G-RD1	04030225910100	PROD_OIL_ACTIVE	2003	10G	-2330	6147996	2280502
32-10G-RD1	04029291930100	PROD_OIL_ACTIVE	2004	10G	-2355	6147102	2280440
11NE-10G-RD2	04029719140200	PROD_OIL_INACTIVE	2005	10G	-2262	6146128	2281373
11SE-10G	04030280400000	PROD_OIL_INACTIVE	2005	10G	-2325	6145864	2281121
21S-10G	04030272730000	PROD_OIL_INACTIVE	2005	10G	-2411	6146332	2280535
22-10G-RD1	04029672670100	INJ_GAS_ACTIVE	2005	10G	-2478	6146400	2280472
51SE-10G	04030295490000	PROD_OIL_ACTIVE	2006	10G	-2451	6148363	2281046
31N-10G	04030363770000	PROD_OIL_ACTIVE	2008	10G	-2364	6147064	2281125
22-11G	04029292070000	INJ_GAS_ACTIVE	1945	11G	-2503	6151736	2280323
51-11G	04029292110000	INJ_GAS_ACTIVE	1945	11G	-2529	6153765	2280954
52-11G	04029292120000	PROD_OIL_P & A	1945	11G	-2525	6153728	2280370
71-11G	04029292150000	PROD_OIL_P & A	1945	11G	-2573	6154994	2280935
82-11G	04029292180000	PROD_OIL_P & A	1952	11G	-2659	6155732	2280251
32-11G	04029543110000	PROD_OIL_P & A	1976	11G	-2548	6152384	2280358

Wells Within 1/4 Mile Of Permit Area With No Penetration Of Reef Ridge Shale

WellName	API	Status	Completion Yr	Sec	TD (TVDss)	Surface X	Surface Y
12-11G	04029556240000	PROD_OIL_P & A	1977	11G	-2523	6151070	2280282
12-11G-RD1	04029556240100	PROD_OIL_INACTIVE	1977	11G	-2461	6151070	2280282
41-11G	04029556270000	PROD_OIL_ACTIVE	1977	11G	-2522	6153044	2281052
61-11G	04029556280000	PROD_OIL_ACTIVE	1977	11G	-2537	6154374	2281169
31-11G	04029580820000	PROD_OIL_ACTIVE	1978	11G	-2463	6152400	2280968
42-11G	04029578660000	PROD_OIL_P & A	1978	11G	-2535	6153090	2280597
32-11G-RD1	04029543110100	PROD_OIL_INACTIVE	2002	11G	-2734	6152384	2280358
52-11G-RD1	04029292120100	PROD_OIL_INACTIVE	2002	11G	-2742	6153728	2280370
52W-11G	04030254490000	PROD_OIL_P & A	2004	11G	-2685	6153698	2280436
52W-11G-RD1	04030254490100	PROD_OIL_ACTIVE	2004	11G	-2714	6153698	2280436
21-12G	04029292210000	PROD_OIL_P & A	1945	12G	-2615	6157028	2280918
22-12G	04029538400000	PROD_OIL_P & A	1976	12G	-2744	6156940	2280342
12-12G	04029556290000	PROD_OIL_P & A	1977	12G	-2708	6156344	2280291
22-12G-RD1	04029538400100	PROD_OIL_INACTIVE	2000	12G	-2999	6156940	2280342
12-12G-RD1	04029556290100	PROD_OIL_INACTIVE	2002	12G	-2974	6156344	2280291
21SE-12G	04030200980000	PROD_OIL_INACTIVE	2002	12G	-2902	6157211	2280790
21-12G-RD1	04029292210100	PROD_OIL_INACTIVE	2003	12G	-2838	6157028	2280918
10E-1G	04029279430000	PROD_OIL_P & A	1922	1G	-2272	6156277	2284291
1J-1G	04029279540000	PROD_OIL_P & A	1922	1G	-2297	6156242	2285420
2J-1G	04029279550000	PROD_OIL_P & A	1922	1G	-2285	6156902	2285334
3H-1G	04029279470000	PROD_OIL_P & A	1922	1G	-2487	6156962	2286261
4H-1G	04029279480000	PROD_OIL_P & A	1922	1G	-2265	6156245	2286226
5H-1G	04029279490000	PROD_OIL_P & A	1922	1G	-2265	6156226	2285826
6H-1G	04029279500000	PROD_OIL_P & A	1924	1G	-2281	6156961	2285816
5J-1G	04029279580000	PROD_OIL_P & A	1926	1G	-2378	6157284	2284821
5H-1G-RD1	04029279490100	PROD_OIL_P & A	1933	1G	-2274	6156226	2285826
4H-1G-RD1	04029279480100	PROD_OIL_P & A	1934	1G	-2194	6156245	2286226
5H-1G-RD2	04029279490200	PROD_OIL_P & A	1936	1G	-2284	6156226	2285826
3AH-1G	04029279640000	PROD_OIL_P & A	1937	1G	-2276	6157129	2286221
6H-1G-RD1	04029279500100	PROD_OIL_P & A	1937	1G	-2285	6156961	2285816
10E-1G-RD1	04029279430100	PROD_OIL_P & A	1943	1G	-2260	6156277	2284291
25-1G	04029279040000	PROD_OIL_ACTIVE	1943	1G	-2498	6156996	2283590
15-1G	04029279010000	PROD_OIL_P & A	1944	1G	-2389	6156382	2283557
17-1G	04029279020000	PROD_OIL_ACTIVE	1944	1G	-2531	6156356	2282318
13-1G	04029279000000	PROD_OIL_P & A	1945	1G	-2343	6156302	2284824
24-1G	04029279030000	PROD_OIL_P & A	1945	1G	-2459	6157064	2284224
26-1G	04029279050000	PROD_OIL_INACTIVE	1945	1G	-2510	6156970	2282924
28R-1G	04029279060000	PROD_OIL_P & A	1945	1G	-2595	6156992	2281655
28R-1G-RD1	04029279060100	PROD_OIL_P & A	1965	1G	-2610	6156992	2281655
18-1G	04029522480000	PROD_OIL_P & A	1976	1G	-2600	6156302	2281559
16-1G	04029556050000	PROD_OIL_ACTIVE	1977	1G	-2507	6156378	2282932
27-1G	04029539390000	PROD_OIL_P & A	1977	1G	-2591	6157114	2282239
27-1G-RD1	04029539390100	PROD_OIL_ACTIVE	1977	1G	-2512	6157114	2282239
23-1G	04029568200000	PROD_OIL_P & A	1978	1G	-2309	6157075	2284888
32X-1G	04029568210000	PROD_OIL_ACTIVE	1978	1G	-2509	6157260	2285255
15X-1G	04029606280000	PROD_OIL_ACTIVE	1980	1G	-2519	6156382	2283257
25X-1G	04029665570000	PROD_OIL_ACTIVE	1982	1G	-2325	6157017	2283252
12-1G	04029692960000	PROD_OIL_P & A	1983	1G	-2299	6156449	2285588
22-1G	04030063020000	PROD_OIL_INACTIVE	1996	1G	-2458	6157241	2285850
23-1G-RD1	04029568200100	PROD_OIL_P & A	1996	1G	-2309	6157075	2284888
12-1G-RD1	04029692960100	PROD_OIL_P & A	1997	1G	-2276	6156449	2285588

Wells Within 1/4 Mile Of Permit Area With No Penetration Of Reef Ridge Shale

WellName	API	Status	Completion Yr	Sec	TD (TVDss)	Surface X	Surface Y
12-1G-RD2	04029692960200	PROD_OIL_P & A	1997	1G	-2280	6156449	2285588
11-1G	04030112500000	PROD_OIL_INACTIVE	1998	1G	-2328	6156257	2286185
11SE-1G	04030117510000	PROD_OIL_P & A	1998	1G	-2421	6156804	2286256
11SE-1G-RD1	04030117510100	PROD_OIL_ACTIVE	1998	1G	-2424	6156804	2286256
11X-1G	04030117530000	PROD_OIL_P & A	1998	1G	-2362	6156828	2286249
11X-1G-RD1	04030117530100	PROD_OIL_ACTIVE	1998	1G	-2362	6156828	2286249
18SE-1G	04030124190000	PROD_OIL_P & A	1998	1G	-2228	6156969	2281651
18SE-1G-RD1	04030124190100	UNKNOWN	1998	1G	-2662	6156969	2281651
18SE-1G-RD2	04030124190200	PROD_OIL_INACTIVE	1998	1G	-2730	6156969	2281651
21-1G	04030108230000	PROD_OIL_INACTIVE	1998	1G	-2459	6157147	2286237
215-1G	04030112510000	PROD_OIL_INACTIVE	1998	1G	-2388	6156376	2283533
21X-1G	04030112520001	INJ_GAS_ACTIVE	1998	1G	-2369	6157120	2286239
23SW-1G	04030108240000	PROD_OIL_INACTIVE	1998	1G	-2472	6156360	2284751
25N-1G	04030119040000	PROD_OIL_INACTIVE	1998	1G	-2425	6157101	2283640
26N-1G	04030127730000	PROD_OIL_ACTIVE	1998	1G	-2549	6157121	2283187
24-1G-RD1	04029279030100	PROD_OIL_ACTIVE	1999	1G	-2440	6157064	2284224
14-1G	04030190020000	PROD_OIL_INACTIVE	2001	1G	-2609	6156361	2284232
24W-1G	04030188950000	PROD_OIL_INACTIVE	2001	1G	-2799	6156798	2284242
17SW-1G	04030205190000	PROD_OIL_ACTIVE	2002	1G	-2698	6156089	2281962
22S-1G	04030207530000	PROD_OIL_ACTIVE	2002	1G	-2556	6157081	2285547
11W-1G	04030220810000	PROD_OIL_ACTIVE	2003	1G	-2364	6156068	2286280
12-1G-RD3	04029692960300	PROD_OIL_INACTIVE	2003	1G	-2549	6156449	2285588
12NW-1G	04030227110000	PROD_OIL_P & A	2003	1G	-2401	6156337	2285584
13NE-1G	04030228310000	PROD_OIL_ACTIVE	2003	1G	-2500	6156705	2284935
23S-1G	04030223810000	PROD_OIL_ACTIVE	2003	1G	-2392	6157120	2284481
24E-1G	04030228300000	PROD_OIL_P & A	2003	1G	-2506	6157321	2284159
24E-1G-RD1	04030228300100	PROD_OIL_ACTIVE	2003	1G	-2500	6157321	2284159
25NW-1G	04030224870000	PROD_OIL_ACTIVE	2003	1G	-2428	6156681	2283776
25SW-1G	04030231020000	PROD_OIL_ACTIVE	2003	1G	-2655	6156730	2283361
35W-1G	04030224680000	PROD_OIL_ACTIVE	2003	1G	-2668	6157331	2283567
12NE-1G	04030247040000	PROD_OIL_ACTIVE	2004	1G	-2404	6156696	2285711
12W-1G	04030259570000	PROD_OIL_ACTIVE	2004	1G	-2447	6156354	2285580
13NW-1G	04030258250000	PROD_OIL_ACTIVE	2004	1G	-2444	6156354	2284828
13S-1G	04030258260000	PROD_OIL_ACTIVE	2004	1G	-2444	6156140	2284432
15N-1G	04030240460000	PROD_OIL_ACTIVE	2004	1G	-2500	6156252	2283943
23N-1G	04030258240000	PROD_OIL_ACTIVE	2004	1G	-2473	6156940	2285172
23W-1G	04030258280000	PROD_OIL_ACTIVE	2004	1G	-2459	6157014	2284811
24NW-1G	04030248360000	PROD_OIL_INACTIVE	2004	1G	-2547	6156709	2284269
15NW-1G	04030281090000	PROD_OIL_ACTIVE	2005	1G	-2414	6156232	2283845
23X-1G	04030281100000	PROD_OIL_INACTIVE	2005	1G	-2485	6156923	2285103
12SW-1G	04030317920000	INJ_GAS_ACTIVE	2006	1G	-2430	6156265	2285338
14SE-1G	04030366880000	PROD_OIL_ACTIVE	2006	1G	-2507	6156594	2283905
16NE-1G	04030313370000	INJ_GAS_ACTIVE	2006	1G	-2561	6156662	2283119
11S-1G	04030339760000	PROD_OIL_ACTIVE	2007	1G	-2372	6156157	2285840
11SW-1G	04030341060000	PROD_OIL_ACTIVE	2007	1G	-2370	6156149	2285811
23-1G-RD2	04029568200200	PROD_OIL_INACTIVE	2007	1G	-2544	6157075	2284888
24SE-1G	04030378490000	PROD_OIL_ACTIVE	2008	1G	-2598	6157131	2283924
26SW-1G	04030366890000	PROD_OIL_ACTIVE	2008	1G	-2646	6156695	2283000
4-22SW-1G	04030177980001	PROD_GAS_INACTIVE	2001	22SW	-3299	6156859	2285148
11-25S	04029273250000	PROD_OIL_P & A	1920	25S	-2729	6156416	2292074
10-25S	04029273240000	PROD_OIL_P & A	1924	25S	-2695	6156414	2292664

Wells Within 1/4 Mile Of Permit Area With No Penetration Of Reef Ridge Shale

WellName	API	Status	Completion Yr	Sec	TD (TVDss)	Surface X	Surface Y
49-25S	04029273300000	PROD_OIL_P & A	1924	25S	-2790	6157012	2292670
12-25S	04029273260000	PROD_OIL_P & A	1960	25S	-2805	6157015	2292070
1U-26S	04029273430000	PROD_OIL_P & A	1921	26S	-2604	6153211	2292070
5U-26S	04029273470000	PROD_OIL_P & A	1921	26S	-2728	6151088	2292145
1-26S	04029273340000	PROD_OIL_P & A	1922	26S	-3561	6153711	2292056
1A-26S	04029273420000	PROD_OIL_P & A	1922	26S	-2667	6153771	2292056
2BM-26S	04029273350000	PROD_OIL_P & A	1922	26S	-2778	6153664	2292536
2U-26S	04029273440000	PROD_OIL_P & A	1922	26S	-2673	6152683	2291985
41BM-26S	04029273390000	PROD_OIL_P & A	1922	26S	-2651	6155276	2292080
9U-26S	04029273510000	PROD_OIL_P & A	1922	26S	-2686	6153265	2292560
3U-26S	04029273450000	PROD_OIL_P & A	1923	26S	-2648	6152154	2292003
4U-26S	04029273460000	PROD_OIL_P & A	1923	26S	-2636	6151622	2292019
7U-26S	04029273490000	PROD_OIL_P & A	1923	26S	-2749	6151796	2292738
8U-26S	04029273500000	PROD_OIL_P & A	1923	26S	-2701	6152562	2292690
21BM-26S	04029273360000	PROD_OIL_P & A	1924	26S	-2461	6154260	2291981
22BM-26S	04029273370000	PROD_OIL_P & A	1924	26S	-2545	6154258	2292582
2BM-26S-RD1	04029273350100	PROD_OIL_P & A	1924	26S	-2701	6153664	2292536
31BM-26S	04029273380000	PROD_OIL_ACTIVE	1924	26S	-2675	6154771	2292081
51BM-26S	04029273400000	PROD_OIL_P & A	1924	26S	-2652	6155819	2292076
6U-26S	04029273480000	PROD_OIL_P & A	1924	26S	-2770	6151110	2292644
52BM-26S	04029273410000	PROD_OIL_P & A	1925	26S	-2792	6155821	2292572
2BM-26S-RD2	04029273350200	PROD_OIL_P & A	1961	26S	-2788	6153664	2292536
2U-26S-RD1	04029273440100	PROD_OIL_P & A	1961	26S	-2609	6152683	2291985
28U-26S	04029273610000	PROD_OIL_ACTIVE	1965	26S	-2554	6152062	2292077
87BM-26S	04029888410000	PROD_OIL_ACTIVE	1991	26S	-3270	6155931	2292977
77H-BM-26S	04030127010000	PROD_OIL_ACTIVE	1998	26S	-3014	6154820	2292801
77H-BM-26S-RD2	04030127010200	UNKNOWN	1998	26S	-2917	6154820	2292801
77SE-BM-26S	04030127920000	PROD_OIL_ACTIVE	1998	26S	-2790	6154480	2292669
87SH-BM-26S	04030122200000	PROD_OIL_INACTIVE	1998	26S	-3452	6155419	2292435
87SH-BM-26S-RD1	04030122200100	OIL PRODUCER, ACTIVE	1998	26S	-2914	6155419	2292435
88-BM-26S	04030127910000	PROD_OIL_P & A	1999	26S	-3089	6155910	2292497
88-BM-26S-RD1	04030127910100	PROD_OIL_INACTIVE	1999	26S	-2842	6155910	2292497
67H-BM-26S	04030157810000	PROD_OIL_P & A	2000	26S	-3083	6154205	2292750
67H-BM-26S-RD1	04030157810100	PROD_OIL_ACTIVE	2000	26S	-2976	6154205	2292750
87NW-BM-26S	04030210000000	PROD_OIL_ACTIVE	2002	26S	-3208	6155376	2293070
88S-BM-26S	04030207270000	PROD_OIL_P & A	2002	26S	-2922	6155873	2292426
88S-BM-26S-RD1	04030207270100	PROD_OIL_ACTIVE	2002	26S	-3070	6155873	2292426
88X-BM-26S	04030233400000	PROD_OIL_ACTIVE	2003	26S	-2899	6155746	2291949
21-27S	04029273670000	PROD_OIL_P & A	1923	27S	-2555	6150588	2292142
57-27S	04029274500000	PROD_OIL_P & A	1923	27S	-2651	6149973	2292770
22-27S	04029273680000	PROD_OIL_P & A	1924	27S	-2663	6150597	2292699
54-27S	04029273830000	PROD_OIL_P & A	1924	27S	-2583	6148780	2292778
55-27S	04029273840000	PROD_OIL_P & A	1924	27S	-2631	6149387	2292779
18-27S	04029273650000	PROD_OIL_P & A	1925	27S	-2580	6149405	2292160
20-27S	04029273660000	PROD_OIL_P & A	1925	27S	-2585	6149990	2292158
38-27S	04029273780001	MON_PSI_APPROVED	1943	27S	-2485	6147179	2292277
47-27S	04029273810000	PROD_OIL_P & A	1943	27S	-2601	6147844	2292927
118-27S	04029273920001	MON_PSI_APPROVED	1944	27S	-2426	6145862	2292294
127-27S	04029274510000	PROD_OIL_P & A	1944	27S	-2564	6146528	2292942
17-27S	04029273640000	PROD_OIL_P & A	1944	27S	-2698	6145869	2292949
28-27S	04029273740000	PROD_OIL_P & A	1944	27S	-2581	6146566	2292284

Wells Within 1/4 Mile Of Permit Area With No Penetration Of Reef Ridge Shale

WellName	API	Status	Completion Yr	Sec	TD (TVDss)	Surface X	Surface Y
37-27S	04029273770000	PROD_OIL_P & A	1944	27S	-2639	6147180	2292932
48-27S	04029273820000	PROD_OIL_P & A	1944	27S	-2516	6147829	2292266
58-27S	04029273860000	PROD_OIL_P & A	1944	27S	-2453	6148516	2292246
77-27S	04029273900000	PROD_OIL_P & A	1947	27S	-3029	6150351	2292757
77-27S-RD1	04029273900100	PROD_OIL_P & A	1949	27S	-2700	6150351	2292757
2118-27S	04029274010000	PROD_OIL_P & A	1953	27S	-2575	6145912	2292372
248-27S	04029274000000	PROD_OIL_P & A	1953	27S	-2524	6147926	2292265
217-27S	04029273960000	PROD_OIL_P & A	1954	27S	-2590	6145936	2293058
237-27S	04029273980000	PROD_OIL_P & A	1954	27S	-2592	6147282	2292930
28-27S-RD1	04029273740100	PROD_OIL_INACTIVE	1962	27S	-2526	6146566	2292284
28A-27S	04029579780000	PROD_OIL_P & A	1978	27S	-2491	6146630	2292356
2217-27S	04029683610000	PROD_OIL_P & A	1983	27S	-2643	6146080	2293109
28A-27S-RD1	04029579780101	MON_PSI_APPROVED	2002	27S	-2868	6146630	2292356
18SW-27S	04030302940000	PROD_OIL_ACTIVE	2006	27S	-2711	6145641	2292187
88S-27S	04030307210000	PROD_OIL_ACTIVE	2006	27S	-2835	6150026	2292077
37SW-27S	04030346750000	INJ_H2O_ACTIVE	2007	27S	-2912	6147102	2292965
54NW-27S	04030345840000	PROD_OIL_INACTIVE	2007	27S	-3093	6148768	2293074
27E-27S	04030345830000	PROD_OIL_ACTIVE	2008	27S	-2961	6146559	2292918
27N-27S	04030347030000	INJ_H2O_ACTIVE	2008	27S	-2974	6146474	2292995
27S-27S	04030347020000	INJ_H2O_ACTIVE	2008	27S	-2912	6146496	2292975
37NW-27S	04030346740000	INJ_H2O_ACTIVE	2008	27S	-2979	6147118	2293023
37X-27S	04030344850000	PROD_OIL_ACTIVE	2008	27S	-2969	6147110	2292994
78-28S	04029274220000	PROD_OIL_ACTIVE	1944	28S	-2273	6144517	2292347
87-28S	04029274250000	PROD_OIL_P & A	1944	28S	-2426	6145125	2293005
88-28S	04029274260000	PROD_OIL_ACTIVE	1944	28S	-2497	6145164	2292347
77-28S	04029274210000	PROD_OIL_P & A	1945	28S	-2549	6144534	2293034
77-28S-RD1	04029274210100	PROD_OIL_P & A	1975	28S	-2548	6144534	2293034
78A-28S	04029531760000	PROD_OIL_P & A	1976	28S	-2437	6144456	2292373
287-28S	04029558520000	PROD_OIL_P & A	1977	28S	-2527	6145027	2293005
78A-28S-RD1	04029531760100	PROD_OIL_ACTIVE	2002	28S	-2460	6144456	2292373
287-28S-RD1	04029558520100	PROD_OIL_ACTIVE	2003	28S	-2613	6145027	2293005
77SE-28S	04030294970000	PROD_OIL_INACTIVE	2006	28S	-2789	6144772	2292775
88S-28S	04030300270000	PROD_OIL_ACTIVE	2006	28S	-2903	6145132	2292240
1-2G	04029279660000	PROD_OIL_P & A	1910	2G	-595	6154132	2283093
10F-2G	04029279920000	PROD_OIL_P & A	1922	2G	-2250	6155790	2285662
14F-2G	04029279960000	PROD_OIL_P & A	1922	2G	-2137	6153415	2285782
16F-2G	04029279980000	PROD_OIL_P & A	1922	2G	-2047	6152232	2285687
18F-2G	04029290000000	PROD_OIL_P & A	1922	2G	-1997	6151040	2285803
1F-2G	04029279830000	PROD_OIL_P & A	1922	2G	-2238	6155794	2286270
1G-2G	04029290010000	PROD_OIL_P & A	1922	2G	-2248	6155790	2285098
2F-2G	04029279840000	PROD_OIL_P & A	1922	2G	-2218	6155202	2286272
2G-2G	04029290020000	PROD_OIL_P & A	1922	2G	-2249	6155194	2285100
3F-2G	04029279850000	PROD_OIL_P & A	1922	2G	-2145	6154614	2286275
4F-2G	04029279860000	PROD_OIL_P & A	1922	2G	-2127	6154015	2286277
5F-2G	04029279870000	PROD_OIL_P & A	1922	2G	-2072	6153422	2286280
6F-2G	04029279880000	PROD_OIL_P & A	1922	2G	-2071	6152829	2286283
7F-2G	04029279890000	PROD_OIL_P & A	1922	2G	-2175	6152236	2286286
8F-2G	04029279900000	PROD_OIL_P & A	1922	2G	-2043	6151678	2286354
9F-2G	04029279910000	PROD_OIL_P & A	1922	2G	-2040	6151090	2286410
9G-2G	04029290060000	PROD_OIL_P & A	1922	2G	-2043	6151041	2285241
15F-2G	04029279970000	PROD_OIL_P & A	1923	2G	-2094	6152772	2285743

Wells Within 1/4 Mile Of Permit Area With No Penetration Of Reef Ridge Shale

WellName	API	Status	Completion Yr	Sec	TD (TVDss)	Surface X	Surface Y
11F-2G	04029279930000	PROD_OIL_INACTIVE	1924	2G	-2164	6155178	2285672
13F-2G	04029279950000	PROD_OIL_P & A	1924	2G	-2130	6154016	2285722
3G-2G	04029290030000	PROD_OIL_P & A	1924	2G	-2188	6154572	2285199
4G-2G	04029290040000	PROD_OIL_P & A	1924	2G	-2149	6154006	2285104
8G-2G	04029290050000	PROD_OIL_P & A	1924	2G	-2072	6151629	2285225
17F-2G	04029279990000	PROD_OIL_P & A	1926	2G	-2060	6151670	2285722
12F-2G	04029279940000	PROD_OIL_P & A	1927	2G	-2138	6154590	2285758
15F-2G-RD1	04029279970100	PROD_OIL_P & A	1927	2G	-2080	6152772	2285743
17F-2G-RD1	04029279990100	PROD_OIL_P & A	1935	2G	-2060	6151670	2285722
45-2G	04029279710000	PROD_OIL_P & A	1943	2G	-2202	6153048	2283699
65-2G	04029279740000	PROD_OIL_INACTIVE	1943	2G	-2339	6154366	2283602
74-2G	04029279750002	MON_PSI_APPROVED	1943	2G	-2334	6155009	2284250
76-2G	04029279760000	PROD_OIL_P & A	1943	2G	-2478	6154968	2282939
85-2G	04029279780000	PROD_OIL_P & A	1943	2G	-2398	6155683	2283590
25-2G	04029279680000	PROD_OIL_P & A	1944	2G	-2242	6151745	2283584
36-2G	04029279690000	PROD_OIL_P & A	1944	2G	-2229	6152434	2282988
56-2G	04029279720000	PROD_OIL_P & A	1944	2G	-2233	6153740	2283022
57-2G	04029279730000	PROD_OIL_P & A	1944	2G	-2421	6153690	2282341
38-2G	04029279700000	PROD_OIL_P & A	1945	2G	-2420	6152403	2281747
38-2G-RD1	04029279700100	PROD_OIL_P & A	1945	2G	-2253	6152403	2281747
77-2G	04029279770000	PROD_OIL_ACTIVE	1945	2G	-2473	6155035	2282280
88-2G	04029279790000	PROD_OIL_P & A	1945	2G	-2531	6155732	2281660
16-2G	04029279670000	PROD_OIL_INACTIVE	1952	2G	-2153	6151052	2283038
34-2G	04029505180000	INJ_GAS_P & A	1975	2G	-3335	6152425	2284373
15-2G	04029521600000	PROD_OIL_P & A	1976	2G	-2162	6151018	2283801
26-2G	04029521610000	PROD_OIL_INACTIVE	1976	2G	-2182	6151674	2282985
35-2G	04029521620000	PROD_OIL_INACTIVE	1976	2G	-2140	6152419	2283662
44-2G	04029522160001	MON_PSI_APPROVED	1976	2G	-3209	6153035	2284335
46-2G	04029533890000	PROD_OIL_P & A	1976	2G	-2249	6153220	2282968
68-2G	04029534940000	PROD_OIL_ACTIVE	1976	2G	-2513	6154376	2281622
78-2G	04029529880000	INJ_GAS_P & A	1976	2G	-2581	6155016	2281618
86-2G	04029539060000	PROD_OIL_P & A	1976	2G	-2476	6155702	2282935
87-2G	04029537560000	PROD_OIL_ACTIVE	1976	2G	-2521	6155698	2282275
48-2G	04029544150000	PROD_OIL_P & A	1977	2G	-2475	6152996	2281692
54-2G	04029538380000	PROD_OIL_P & A	1977	2G	-2255	6153732	2284302
58-2G	04029539400000	PROD_OIL_ACTIVE	1977	2G	-2502	6153702	2281704
73-2G	04029556330000	PROD_OIL_ACTIVE	1977	2G	-3556	6155104	2284905
83-2G	04029576920000	PROD_OIL_P & A	1978	2G	-2313	6155710	2284913
38X-2G	04029583110000	PROD_OIL_P & A	1979	2G	-2443	6152352	2281562
63X-2G	04029602520000	PROD_OIL_P & A	1980	2G	-2240	6154385	2285164
82-2G	04029602510000	PROD_OIL_P & A	1980	2G	-3216	6155880	2285576
64-2G	04029660290000	PROD_OIL_ACTIVE	1982	2G	-2423	6154422	2284212
67-2G	04029663360000	PROD_OIL_P & A	1982	2G	-2493	6154362	2282344
75-2G	04029547300000	PROD_OIL_INACTIVE	1982	2G	-2340	6155082	2283567
84-2G	04029674280000	INJ_GAS_ACTIVE	1982	2G	-2379	6155612	2284283
17X-2G	04029686370000	PROD_OIL_P & A	1983	2G	-2260	6151156	2282546
55-2G	04029680150000	PROD_OIL_INACTIVE	1983	2G	-2304	6153724	2283604
36X-2G	04029812240000	PROD_OIL_P & A	1988	2G	-2283	6152174	2283297
36X-2G-RD1	04029812240100	PROD_OIL_P & A	1988	2G	-2158	6152174	2283297
85-2G-RD1	04029279780100	PROD_OIL_INACTIVE	1995	2G	-2287	6155683	2283590
25-2G-RD1	04029279680101	MON_PSI_APPROVED	1996	2G	-2149	6151745	2283584

Wells Within 1/4 Mile Of Permit Area With No Penetration Of Reef Ridge Shale

WellName	API	Status	Completion Yr	Sec	TD (TVDss)	Surface X	Surface Y
63X-2G-RD1	04029602520100	PROD_OIL_ACTIVE	1997	2G	-2426	6154385	2285164
81X-2G	04030082440000	PROD_OIL_ACTIVE	1997	2G	-2435	6155533	2286282
18E-2G	04030125350000	PROD_OIL_INACTIVE	1998	2G	-2436	6151601	2281972
21-2G	04030122160000	PROD_OIL_ACTIVE	1998	2G	-3032	6151761	2286119
26E-2G	04030113110000	PROD_OIL_P & A	1998	2G	-2300	6151981	2283328
26E-2G-RD1	04030113110100	PROD_OIL_ACTIVE	1998	2G	-2300	6151981	2283328
26NE-2G	04030112310000	PROD_OIL_ACTIVE	1998	2G	-2279	6152007	2283325
26SW-2G	04030118690000	PROD_OIL_INACTIVE	1998	2G	-2320	6151632	2282381
27-2G	04030118700000	PROD_OIL_INACTIVE	1998	2G	-2396	6151648	2282367
28NE-2G	04030125370000	PROD_OIL_ACTIVE	1998	2G	-2387	6151603	2281995
31X-2G	04030127020000	PROD_OIL_P & A	1998	2G	-2180	6152488	2286295
31X-2G-RD1	04030127020100	PROD_OIL_INACTIVE	1998	2G	-2112	6152488	2286295
48N-2G	04030125360000	PROD_OIL_ACTIVE	1998	2G	-2382	6153053	2282413
54NE-2G	04030108250000	PROD_OIL_ACTIVE	1998	2G	-2269	6153701	2284788
67N-2G	04030118680000	PROD_OIL_INACTIVE	1998	2G	-2389	6154336	2282340
72-2G	04030112320000	PROD_OIL_P & A	1998	2G	-2338	6154930	2285188
72-2G-RD1	04030112320100	PROD_OIL_INACTIVE	1998	2G	-2361	6154930	2285188
76NE-2G	04030125380000	PROD_OIL_INACTIVE	1998	2G	-2412	6155097	2283458
86NE-2G	04030119790001	MON_PSI_APPROVED	1998	2G	-2430	6155718	2282952
45NE-2G	04030133070000	PROD_OIL_INACTIVE	1999	2G	-2321	6153362	2284071
47-2G	04030140840001	MON_PSI_APPROVED	1999	2G	-2402	6153158	2282522
54-2G-RD1	04029538380100	PROD_OIL_ACTIVE	1999	2G	-2267	6153732	2284302
72NE-2G	04030136750000	PROD_OIL_ACTIVE	1999	2G	-2307	6154852	2285220
76-2G-RD1	04029279760100	PROD_OIL_INACTIVE	1999	2G	-2376	6154968	2282939
12-2G	04030165690000	PROD_OIL_ACTIVE	2000	2G	-2183	6151164	2285685
47A-2G	04030161500000	PROD_OIL_ACTIVE	2000	2G	-2403	6153167	2282542
56S-2G	04030154030000	PROD_OIL_ACTIVE	2000	2G	-2399	6153834	2283030
66-2G	04030165680000	PROD_OIL_P & A	2000	2G	-2511	6154511	2283189
12SW-2G	04030177960000	PROD_OIL_ACTIVE	2001	2G	-2230	6150996	2285355
17-2G	04030186180000	PROD_OIL_ACTIVE	2001	2G	-2569	6151320	2282460
17NW-2G	04030179810000	PROD_OIL_ACTIVE	2001	2G	-2530	6150913	2282645
21SW-2G	04030177970000	PROD_OIL_ACTIVE	2001	2G	-2235	6151630	2286073
36-2G-RD1	04029279690100	PROD_OIL_ACTIVE	2001	2G	-2588	6152434	2282988
38-2G-RD2	04029279700200	PROD_OIL_ACTIVE	2001	2G	-2570	6152403	2281747
4-11-2G	04030186560000	PROD_OIL_P & A	2001	2G	-2222	6151501	2286297
45SE-2G	04030187200000	PROD_OIL_ACTIVE	2001	2G	-2525	6153314	2283603
54SE-2G	04030178650000	PROD_OIL_ACTIVE	2001	2G	-2498	6153932	2284054
28S-2G	04030197060000	PROD_OIL_P & A	2002	2G	-2579	6151714	2281641
28S-2G-RD1	04030197060100	PROD_OIL_P & A	2002	2G	-2511	6151714	2281641
76SE-2G	04030208740000	PROD_OIL_ACTIVE	2002	2G	-2603	6155186	2282601
78NE-2G	04030204610000	PROD_OIL_P & A	2002	2G	-2071	6155308	2281969
78NE-2G-RD1	04030204610100	PROD_OIL_ACTIVE	2002	2G	-2672	6155308	2281969
82-2G-RD1	04029602510101	MON_PSI_APPROVED	2002	2G	-3470	6155880	2285576
86-2G-RD1	04029539060100	PROD_OIL_ACTIVE	2002	2G	-2612	6155702	2282935
87NE-2G	04030200000000	PROD_OIL_ACTIVE	2002	2G	-2656	6156006	2282656
15-2G-RD1	04029521600100	PROD_OIL_ACTIVE	2003	2G	-2327	6151018	2283801
17SW-2G	04030223820000	PROD_OIL_P & A	2003	2G	-2367	6151121	2282277
17SW-2G-RD1	04030223820100	PROD_OIL_ACTIVE	2003	2G	-2358	6151121	2282277
36X-2G-RD2	04029812240200	PROD_OIL_INACTIVE	2003	2G	-2265	6152174	2283297
45E-2G	04030231040000	PROD_OIL_ACTIVE	2003	2G	-2370	6153286	2283853
45SW-2G	04030224640000	PROD_OIL_ACTIVE	2003	2G	-2351	6152906	2283442

Wells Within 1/4 Mile Of Permit Area With No Penetration Of Reef Ridge Shale

WellName	API	Status	Completion Yr	Sec	TD (TVDss)	Surface X	Surface Y
48-2G-RD1	04029544150100	PROD_OIL_P & A	2003	2G	-2519	6152996	2281692
48-2G-RD2	04029544150200	INJ_GAS_P & A	2003	2G	-2527	6152996	2281692
48NW-2G	04030233440000	PROD_OIL_ACTIVE	2003	2G	-2438	6152713	2281964
57SW-2G	04030233450000	PROD_OIL_ACTIVE	2003	2G	-2394	6153459	2282138
66-2G-RD1	04030165680100	PROD_OIL_INACTIVE	2003	2G	-2529	6154511	2283189
67-2G-RD1	04029663360100	PROD_OIL_INACTIVE	2003	2G	-2394	6154362	2282344
71-2G	04030220820000	PROD_OIL_P & A	2003	2G	-2351	6154934	2286265
73NE-2G	04030227120000	PROD_OIL_ACTIVE	2003	2G	-2499	6155519	2285162
75-2G-RD1	04029547300100	PROD_OIL_P & A	2003	2G	-2418	6155082	2283567
82NW-2G	04030233430000	PROD_OIL_P & A	2003	2G	-2278	6155770	2285631
82NW-2G-RD1	04030233430100	PROD_OIL_ACTIVE	2003	2G	-2241	6155770	2285632
82S-2G	04030216990000	PROD_OIL_INACTIVE	2003	2G	-2533	6155908	2285444
17X-2G-RD1	04029686370100	PROD_OIL_ACTIVE	2004	2G	-2342	6151156	2282546
34-2G-RD1	04029505180100	INJ_GAS_ACTIVE	2004	2G	-2389	6152425	2284373
83-2G-RD1	04029576920100	PROD_OIL_ACTIVE	2004	2G	-2435	6155710	2284913
11SW-2G	04030273840000	PROD_OIL_INACTIVE	2005	2G	-2249	6151536	2286036
45-2G-RD1	04029279710100	PROD_OIL_INACTIVE	2005	2G	-2370	6153048	2283699
61X-2G	04030291340000	MON_PSI_P & A	2005	2G	-2307	6154419	2286428
67NE-2G	04030292200000	PROD_OIL_ACTIVE	2005	2G	-2627	6154578	2282435
71-2G-RD1	04030220820100	INJ_GAS_ACTIVE	2005	2G	-2383	6154934	2286265
72N-2G	04030284520000	PROD_OIL_ACTIVE	2005	2G	-2334	6155052	2285716
78-2G-RD1	04029529880100	PROD_OIL_ACTIVE	2005	2G	-2586	6155016	2281618
86S-2G	04030280390000	PROD_OIL_ACTIVE	2005	2G	-2559	6155282	2282582
14H-2G	04030290180000	PROD_OIL_ACTIVE	2006	2G	-2064	6151112	2284588
46-2G-RD1	04029533890100	INJ_GAS_ACTIVE	2006	2G	-2353	6153220	2282968
68N-2G	04030306800000	PROD_OIL_ACTIVE	2006	2G	-2567	6154228	2282328
85S-2G	04030307200000	PROD_OIL_ACTIVE	2006	2G	-2613	6155763	2283053
18-2G	04030323450000	PROD_OIL_ACTIVE	2007	2G	-2567	6151177	2281791
66SE-2G	04030341080000	PROD_OIL_INACTIVE	2007	2G	-2447	6154417	2283244
67NW-2G	04030341070000	PROD_OIL_ACTIVE	2007	2G	-2455	6153957	2282806
72E-2G	04030339740000	PROD_OIL_ACTIVE	2007	2G	-2350	6154944	2285750
72SW-2G	04030339750000	PROD_OIL_ACTIVE	2007	2G	-2335	6154638	2285062
76SW-2G	04030328950000	PROD_OIL_INACTIVE	2007	2G	-2354	6155005	2282928
17W-2G	04030363440000	PROD_OIL_ACTIVE	2008	2G	-2606	6151001	2282557
18SE-2G	04030365400000	PROD_OIL_ACTIVE	2008	2G	-2545	6151195	2281436
27NE-2G	04030356380000	PROD_OIL_ACTIVE	2008	2G	-2609	6151548	2282831
48E-2G	04030365380000	PROD_OIL_ACTIVE	2008	2G	-2628	6153387	2281822
58NE-2G	04030365390000	PROD_OIL_ACTIVE	2008	2G	-2630	6153808	2281989
62-2G	04030365370000	PROD_OIL_ACTIVE	2008	2G	-2377	6154339	2285572
63S-2G	04030378550000	PROD_OIL_ACTIVE	2008	2G	-2555	6154576	2284633
64NW-2G	04030378540000	PROD_OIL_ACTIVE	2008	2G	-2535	6154092	2284436
73N-2G	04030378520000	PROD_OIL_ACTIVE	2008	2G	-2558	6155468	2285201
73SW-2G	04030357710000	PROD_OIL_ACTIVE	2008	2G	-2779	6154686	2284713
86N-2G	04030361510000	PROD_OIL_ACTIVE	2008	2G	-2505	6155782	2283207
82SW-2G	04030378560000	PROD_OIL_ACTIVE	2009	2G	-2589	6155799	2285484
76-33S	04029276030000	PROD_OIL_P & A	1941	33S	-2179	6144486	2288380
71-33S	04029275980000	PROD_OIL_P & A	1944	33S	-2399	6144471	2291646
72-33S	04029275990000	PROD_OIL_ACTIVE	1944	33S	-2118	6144499	2290906
73-33S	04029276000000	PROD_OIL_P & A	1944	33S	-2172	6144411	2290336
74-33S	04029276010000	PROD_OIL_INACTIVE	1944	33S	-2008	6144384	2289652
75-33S	04029276020000	PROD_OIL_INACTIVE	1944	33S	-2116	6144504	2289004

Wells Within 1/4 Mile Of Permit Area With No Penetration Of Reef Ridge Shale

WellName	API	Status	Completion Yr	Sec	TD (TVDss)	Surface X	Surface Y
77-33S	04029276040000	PROD_OIL_P & A	1944	33S	-2005	6144556	2287799
81-33S	04029276060000	PROD_OIL_INACTIVE	1944	33S	-2293	6145184	2291642
82-33S	04029276070000	PROD_OIL_P & A	1944	33S	-2236	6145200	2290905
83-33S	04029276080000	PROD_OIL_ACTIVE	1944	33S	-2082	6145166	2290362
84-33S	04029276090000	PROD_OIL_INACTIVE	1944	33S	-2210	6145154	2289592
85-33S	04029276100000	INJ_GAS_P & A	1944	33S	-2005	6145102	2289023
86-33S	04029276110000	PROD_OIL_P & A	1944	33S	-2074	6145144	2288307
78-33S	04029276050000	PROD_OIL_P & A	1945	33S	-1881	6144411	2287130
87-33S	04029555840000	PROD_OIL_INACTIVE	1977	33S	-2113	6145143	2287763
88-33S	04029564390000	PROD_OIL_ACTIVE	1977	33S	-2219	6145192	2287036
81X-33S	04029578520000	PROD_OIL_P & A	1978	33S	-2359	6145191	2291422
271-33S	04029694620000	PROD_OIL_P & A	1983	33S	-2362	6144538	2291752
84A-33S	04030027560000	PROD_OIL_ACTIVE	1994	33S	-2272	6145140	2289579
83SW-33S	04030075310000	PROD_OIL_INACTIVE	1997	33S	-2252	6145027	2290090
78N-33S	04030124210000	PROD_OIL_INACTIVE	1998	33S	-2250	6144424	2287189
84NE-33S	04030124220000	PROD_OIL_INACTIVE	1998	33S	-2546	6145233	2289801
85X-33S	04030122880000	PROD_OIL_ACTIVE	1998	33S	-2318	6144882	2289033
86-33S-RD1	04029276110100	PROD_OIL_ACTIVE	1998	33S	-2200	6145144	2288307
87SE-33S	04030124230000	PROD_OIL_INACTIVE	1998	33S	-2058	6145004	2287729
86N-33S	04030140170000	PROD_OIL_P & A	1999	33S	-2262	6145303	2288428
86N-33S-RD1	04030140170100	PROD_OIL_INACTIVE	1999	33S	-2193	6145303	2288428
4-77-33S-RD1	04029276040100	PROD_OIL_P & A	2000	33S	-2128	6144556	2287799
467NE-33S	04030195360000	PROD_OIL_P & A	2001	33S	-2216	6144094	2287895
66NE-33S	04030186150000	PROD_OIL_INACTIVE	2001	33S	-2231	6144345	2288354
73-33S-RD1	04029276000100	PROD_OIL_INACTIVE	2001	33S	-2290	6144411	2290336
73S-33S	04030186170000	PROD_OIL_INACTIVE	2001	33S	-2326	6144511	2290026
75NW-33S	04030186160000	PROD_OIL_INACTIVE	2001	33S	-2346	6144670	2289366
88N-33S	04030177940000	PROD_OIL_P & A	2001	33S	-2197	6145217	2287423
88N-33S-RD1	04030177940100	PROD_OIL_ACTIVE	2001	33S	-2220	6145217	2287423
271-33S-RD1	04029694620100	PROD_OIL_ACTIVE	2002	33S	-2710	6144538	2291752
64NE-33S	04030201230000	PROD_OIL_INACTIVE	2002	33S	-2435	6144107	2289828
73NE-33S	04030208190000	PROD_OIL_P & A	2002	33S	-2108	6144770	2290639
73NE-33S-RD1	04030208190100	PROD_OIL_P & A	2002	33S	-2191	6144770	2290639
73NE-33S-RD2	04030208190200	PROD_OIL_INACTIVE	2002	33S	-2074	6144770	2290639
78SE-33S	04030208200000	PROD_OIL_ACTIVE	2002	33S	-2140	6144655	2287073
81X-33S-RD1	04029578520100	PROD_OIL_INACTIVE	2002	33S	-2451	6145191	2291422
63NE-33S	04030218090000	PROD_OIL_INACTIVE	2003	33S	-2359	6144340	2290734
71-33S-RD1	04029275980100	PROD_OIL_P & A	2003	33S	-2609	6144471	2291646
74NE-33S	04030217060000	PROD_OIL_INACTIVE	2003	33S	-2332	6144671	2289588
82-33S-RD1	04029276070100	PROD_OIL_ACTIVE	2003	33S	-2386	6145200	2290905
74NW-33S	04030280540000	MON_PSI_APPROVED	2005	33S	-2204	6144487	2289952
82NE-33S	04030283590000	PROD_OIL_ACTIVE	2005	33S	-2500	6145483	2291048
71S-33S	04030307260000	PROD_OIL_ACTIVE	2006	33S	-2400	6144590	2291474
72NE-33S	04030307240000	PROD_OIL_ACTIVE	2006	33S	-2394	6144970	2290997
82SE-33S	04030306150000	PROD_OIL_ACTIVE	2006	33S	-2356	6145229	2290794
83W-33S	04030306970000	PROD_OIL_INACTIVE	2006	33S	-2318	6144710	2290556
84E-33S	04030306960000	PROD_OIL_ACTIVE	2006	33S	-2344	6145296	2289864
84N-33S	04030306140000	PROD_OIL_INACTIVE	2006	33S	-2332	6144989	2290040
71E-33S	04030370890000	PROD_OIL_ACTIVE	2008	33S	-2714	6144659	2291772
17B-34S	04029276880000	PROD_OIL_P & A	1922	34S	-1951	6150504	2286916
1B-34S	04029276710000	PROD_OIL_P & A	1922	34S	-2564	6150583	2291649

Wells Within 1/4 Mile Of Permit Area With No Penetration Of Reef Ridge Shale

WellName	API	Status	Completion Yr	Sec	TD (TVDss)	Surface X	Surface Y
3B-34S	04029276730000	PROD_OIL_P & A	1922	34S	-2290	6150570	2291052
11-34S	04029276280000	PROD_OIL_INACTIVE	1923	34S	-2271	6148745	2291078
13-34S	04029276300000	PROD_OIL_P & A	1923	34S	-2094	6148707	2289896
14-34S	04029276310000	PROD_OIL_P & A	1923	34S	-2013	6148713	2289300
15B-34S	04029276850000	PROD_OIL_P & A	1923	34S	-1895	6150520	2287505
17-34S	04029276340000	PROD_OIL_P & A	1923	34S	-2029	6148682	2287038
11B-34S	04029276810000	PROD_OIL_P & A	1924	34S	-2094	6150538	2288683
13B-34S	04029276830000	PROD_OIL_ACTIVE	1924	34S	-2139	6150532	2288086
15-34S	04029276320000	PROD_OIL_P & A	1924	34S	-1998	6148704	2288542
15XB-34S	04029276860000	INJ_GAS_P & A	1924	34S	-2055	6150524	2287431
2-34S	04029276200000	PROD_OIL_INACTIVE	1924	34S	-2398	6149404	2291081
3-34S	04029276210000	PROD_OIL_P & A	1924	34S	-2150	6149394	2290477
4B-34S	04029276740000	PROD_OIL_P & A	1924	34S	-2491	6149944	2291056
5B-34S	04029276750000	PROD_OIL_P & A	1924	34S	-2206	6150565	2290456
6B-34S	04029276760000	PROD_OIL_P & A	1924	34S	-2194	6149936	2290462
7B-34S	04029276770000	PROD_OIL_P & A	1924	34S	-2192	6150555	2289860
9B-34S	04029276790000	PROD_OIL_P & A	1924	34S	-2158	6150548	2289273
10B-34S	04029276800000	PROD_OIL_P & A	1925	34S	-2185	6149916	2289280
12B-34S	04029276820000	PROD_OIL_P & A	1925	34S	-2126	6149912	2288696
1-34S	04029276190000	PROD_OIL_ACTIVE	1925	34S	-2464	6149410	2291666
14B-34S	04029276840000	PROD_OIL_P & A	1925	34S	-2134	6149900	2288105
16-34S	04029276330000	PROD_OIL_P & A	1925	34S	-2012	6148692	2287795
16B-34S	04029276870000	PROD_OIL_P & A	1925	34S	-2150	6149892	2287514
18B-34S	04029276890000	PROD_OIL_P & A	1925	34S	-1987	6149884	2286924
2B-34S	04029276720000	PROD_OIL_ACTIVE	1925	34S	-2523	6149958	2291657
4-34S	04029276220000	PROD_OIL_INACTIVE	1925	34S	-2192	6149383	2289883
5-34S	04029276230000	PROD_OIL_P & A	1925	34S	-2121	6149372	2289289
6-34S	04029276240000	PROD_OIL_P & A	1925	34S	-2092	6149392	2288705
7-34S	04029276250000	PROD_OIL_P & A	1925	34S	-2080	6149356	2288112
7B-34S-RD1	04029276770100	PROD_OIL_P & A	1925	34S	-2232	6150555	2289860
8-34S	04029276260000	PROD_OIL_INACTIVE	1925	34S	-2112	6149364	2287521
8B-34S	04029276780000	PROD_OIL_P & A	1925	34S	-2178	6149927	2289874
9-34S	04029276270000	PROD_OIL_P & A	1930	34S	-2134	6149364	2287076
11B-34S-RD1	04029276810100	PROD_OIL_INACTIVE	1933	34S	-2169	6150538	2288683
21-34S	04029276360000	PROD_OIL_INACTIVE	1943	34S	-2371	6146510	2291621
23-34S	04029276380000	PROD_OIL_ACTIVE	1943	34S	-2250	6146489	2290311
32-34S	04029276420000	PROD_OIL_P & A	1943	34S	-2223	6147159	2290957
41-34S	04029276480001	MON_PSI_APPROVED	1943	34S	-2629	6147832	2291599
2	04029276200100	OIL PRODUCER	1944	34S	-2393	6149412	2291092
111-34S	04029276520000	PROD_OIL_INACTIVE	1944	34S	-2380	6145824	2291662
112-34S	04029276530000	PROD_OIL_ACTIVE	1944	34S	-2169	6145840	2290978
113-34S	04029276540000	PROD_OIL_P & A	1944	34S	-2268	6145802	2290322
114-34S	04029276550000	PROD_OIL_P & A	1944	34S	-2005	6145858	2289664
115-34S	04029276560000	PROD_OIL_P & A	1944	34S	-2121	6145870	2288952
117-34S	04029276580000	PROD_OIL_INACTIVE	1944	34S	-1978	6145793	2287700
18-34S	04029276350001	MON_PSI_APPROVED	1944	34S	-1863	6145784	2287041
24-34S	04029276390000	PROD_OIL_INACTIVE	1944	34S	-2194	6146412	2289693
31-34S	04029276410001	MON_PSI_APPROVED	1944	34S	-2411	6147243	2291612
33-34S	04029276430000	PROD_OIL_P & A	1944	34S	-2309	6147220	2290257
34-34S	04029276440000	PROD_OIL_INACTIVE	1944	34S	-2183	6147186	2289512
35-34S	04029276450000	PROD_OIL_P & A	1944	34S	-2105	6147172	2288902

Wells Within 1/4 Mile Of Permit Area With No Penetration Of Reef Ridge Shale

WellName	API	Status	Completion Yr	Sec	TD (TVDss)	Surface X	Surface Y
36-34S	04029276460000	MON_PSI_P & A	1944	34S	-1926	6147113	2288402
38-34S	04029276470000	INJ_GAS_ACTIVE	1944	34S	-1947	6147090	2287016
42-34S	04029276490001	MON_PSI_APPROVED	1944	34S	-2397	6147807	2290946
43-34S	04029276500000	PROD_OIL_INACTIVE	1944	34S	-2214	6147806	2290276
51-34S	04029276510000	PROD_OIL_P & A	1944	34S	-2508	6148624	2291585
116-34S	04029276570000	PROD_OIL_P & A	1945	34S	-2023	6145780	2288376
22-34S	04029276370000	PROD_OIL_P & A	1945	34S	-2346	6146446	2291076
25-34S	04029276400000	PROD_OIL_P & A	1945	34S	-2093	6146468	2289017
251-34S	04029276590000	PROD_OIL_INACTIVE	1953	34S	-2536	6148964	2291592
28-34S	04029538280000	PROD_OIL_INACTIVE	1976	34S	-2048	6146394	2287054
44-34S	04029526840000	PROD_OIL_P & A	1976	34S	-2445	6147714	2289436
53-34S	04029526850000	PROD_OIL_P & A	1976	34S	-2461	6148508	2290273
77-34S	04029537010000	PROD_OIL_INACTIVE	1976	34S	-2645	6149844	2287584
114X-34S	04029556910000	PROD_OIL_ACTIVE	1977	34S	-2242	6145654	2289771
231-34S	04029539040000	PROD_OIL_ACTIVE	1977	34S	-2463	6147266	2291519
235-34S	04029556920000	PROD_OIL_ACTIVE	1977	34S	-2350	6147060	2289060
26-34S	04029555880000	PROD_OIL_INACTIVE	1977	34S	-2290	6146414	2288626
27-34S	04029555890000	PROD_OIL_P & A	1977	34S	-2019	6146450	2287619
47-34S	04029555900000	PROD_OIL_P & A	1977	34S	-2028	6147636	2287593
47-34S-RD1	04029555900100	PROD_OIL_INACTIVE	1977	34S	-2077	6147636	2287593
71X-34S	04029562100000	PROD_OIL_P & A	1977	34S	-2642	6149944	2291306
72-34S	04029555910000	PROD_OIL_P & A	1977	34S	-2341	6150024	2290754
81-34S	04029565100000	PROD_OIL_P & A	1977	34S	-2338	6150689	2291298
81-34S-RD1	04029565100100	PROD_OIL_INACTIVE	1977	34S	-2355	6150689	2291298
111A-34S	04029581800000	PROD_OIL_P & A	1978	34S	-2232	6146003	2291526
112A-34S	04029582220000	PROD_OIL_ACTIVE	1978	34S	-2320	6146009	2291002
113A-34S	04029582410000	PROD_OIL_P & A	1978	34S	-2152	6145980	2290363
22A-34S	04029583030000	PROD_OIL_P & A	1978	34S	-2246	6146534	2291126
26X-34S	04029568840000	PROD_OIL_INACTIVE	1978	34S	-2036	6146422	2288128
32A-34S	04029582900000	PROD_OIL_ACTIVE	1978	34S	-2439	6147191	2291050
33A-34S	04029581560000	PROD_OIL_P & A	1978	34S	-2240	6147386	2290410
42A-34S	04029580810000	PROD_OIL_ACTIVE	1978	34S	-2293	6147869	2290880
11X-34S	04029593020000	PROD_OIL_P & A	1979	34S	-2484	6145608	2291899
11X-34S-RD1	04029593020101	MON_PSI_APPROVED	1979	34S	-2474	6145608	2291899
12-34S	04029276290000	PROD_OIL_P & A	1979	34S	-2689	6148736	2290461
21A-34S	04029602010001	MON_PSI_APPROVED	1979	34S	-2291	6146526	2291748
23X-34S	04029593690000	PROD_OIL_P & A	1979	34S	-2300	6146374	2290447
34A-34S	04029588980000	PROD_OIL_ACTIVE	1979	34S	-2252	6146974	2289460
63X-34S	04029593650000	PROD_OIL_P & A	1979	34S	-2511	6149023	2290615
222-34S	04029672250000	PROD_OIL_INACTIVE	1982	34S	-2370	6146610	2291154
33B-34S	04029660300000	PROD_OIL_ACTIVE	1982	34S	-2300	6147353	2289973
24A-34S	04029753950000	PROD_OIL_P & A	1985	34S	-2224	6146642	2289648
24A-34S-RD1	04029753950100	PROD_OIL_INACTIVE	1985	34S	-2096	6146642	2289648
44N-34S	04029822880000	PROD_OIL_P & A	1988	34S	-2547	6147964	2290246
44N-34S-RD1	04029822880100	PROD_OIL_P & A	1988	34S	-1625	6147964	2290246
44N-34S-RD2	04029822880200	PROD_OIL_P & A	1988	34S	-2316	6147964	2290246
117X-34S	04030009440000	PROD_OIL_INACTIVE	1993	34S	-2140	6146057	2287624
84-34S	04030027350000	PROD_OIL_INACTIVE	1994	34S	-2402	6150583	2289932
25N-34S	04030041060000	PROD_OIL_INACTIVE	1995	34S	-2299	6146337	2289363
226-34S	04030065870000	PROD_OIL_P & A	1996	34S	-2276	6146456	2288162
18X-34S	04030084500000	PROD_OIL_INACTIVE	1997	34S	-2085	6145670	2287173

Wells Within 1/4 Mile Of Permit Area With No Penetration Of Reef Ridge Shale

WellName	API	Status	Completion Yr	Sec	TD (TVDss)	Surface X	Surface Y
74-34S	04030078870000	PROD_OIL_P & A	1997	34S	-2330	6149543	2289481
75-34S	04030082450000	PROD_OIL_P & A	1997	34S	-2264	6149991	2288966
116-34S-RD1	04029276570100	PROD_OIL_P & A	1998	34S	-2279	6145780	2288376
173-34S	04030118810000	PROD_OIL_INACTIVE	1998	34S	-2512	6149726	2290348
24N-34S	04030124180000	PROD_OIL_INACTIVE	1998	34S	-2109	6146343	2290094
36X-34S	04030112300000	PROD_OIL_P & A	1998	34S	-2320	6147201	2288124
36X-34S-RD1	04030112300100	PROD_OIL_P & A	1998	34S	-2342	6147201	2288124
36X-34S-RD2	04030112300200	PROD_OIL_INACTIVE	1998	34S	-2334	6147201	2288124
76NE-34S	04030124980000	PROD_OIL_P & A	1998	34S	-2233	6149705	2288343
76NE-34S-RD1	04030124980101	MON_PSI_APPROVED	1998	34S	-2225	6149705	2288343
77NE-34S	04030124990000	PROD_OIL_ACTIVE	1998	34S	-2436	6149758	2287880
85-34S	04030122890000	PROD_OIL_INACTIVE	1998	34S	-2252	6150579	2288943
14S-34S	04030137290000	PROD_OIL_INACTIVE	1999	34S	-2221	6145831	2289880
226-34S-RD1	04030065870100	PROD_OIL_P & A	2000	34S	-890.2	6146456	2288162
226-34S-RD2	04030065870200	PROD_OIL_P & A	2000	34S	-2100	6146456	2288162
15NE-34S	04030186540000	PROD_OIL_INACTIVE	2001	34S	-2263	6146136	2289263
25SW-34S	04030188920000	PROD_OIL_INACTIVE	2001	34S	-2295	6146278	2288983
65E-34S	04030177910000	PROD_OIL_ACTIVE	2001	34S	-2302	6149353	2288993
65NE-34S-RD1	04030239190100	PROD_OIL_ACTIVE	2001	34S	-2346	6149278	2289242
68SW-34S	04030177920000	PROD_OIL_ACTIVE	2001	34S	-2261	6149039	2286909
72-34S-RD1	04029555910100	PROD_OIL_ACTIVE	2001	34S	-2660	6150024	2290754
74NE-34S	04030186270000	PROD_OIL_INACTIVE	2001	34S	-2437	6149839	2289827
87-34S	04030190140000	PROD_OIL_P & A	2001	34S	-2400	6150524	2287468
87-34S-RD1	04030190140100	PROD_OIL_P & A	2001	34S	-2293	6150524	2287468
113A-34S-RD1	04029582410100	PROD_OIL_INACTIVE	2002	34S	-2454	6145980	2290363
25-34S-RD1	04029276400100	PROD_OIL_ACTIVE	2002	34S	-2410	6146468	2289017
44N-34S-RD3	04029822880300	PROD_OIL_ACTIVE	2002	34S	-2621	6147964	2290246
53-34S-RD1	04029526850100	PROD_OIL_ACTIVE	2002	34S	-2355	6148508	2290273
63-34S	04030195840000	PROD_OIL_ACTIVE	2002	34S	-2440	6149175	2290351
64NE-34S	04030215540000	PROD_OIL_INACTIVE	2002	34S	-2503	6149083	2289667
76NW-34S	04030211820000	PROD_OIL_ACTIVE	2002	34S	-2331	6149467	2288488
84SW-34S	04030197510000	PROD_OIL_INACTIVE	2002	34S	-2407	6150191	2289519
111A-34S-RD1	04029581800100	PROD_OIL_ACTIVE	2003	34S	-2391	6146003	2291526
113-34S-RD1	04029276540100	PROD_OIL_ACTIVE	2003	34S	-2418	6145802	2290322
22A-34S-RD1	04029583030100	PROD_OIL_ACTIVE	2003	34S	-2501	6146534	2291126
23SE-34S	04030217320000	PROD_OIL_P & A	2003	34S	-2399	6146948	2290077
23X-34S-RD1	04029593690100	PROD_OIL_ACTIVE	2003	34S	-2443	6146374	2290447
33-34S-RD1	04029276430100	PROD_OIL_ACTIVE	2003	34S	-2532	6147220	2290257
44-34S-RD1	04029526840100	PROD_OIL_INACTIVE	2003	34S	-2458	6147714	2289436
63X-34S-RD1	04029593650100	PROD_OIL_INACTIVE	2003	34S	-2420	6149023	2290615
73-34S	04030226860000	PROD_OIL_INACTIVE	2003	34S	-2438	6149643	2289760
78-34S	04030225310000	PROD_OIL_P & A	2003	34S	-2459	6149797	2287184
84N-34S	04030230480000	PROD_OIL_INACTIVE	2003	34S	-2541	6150295	2290076
84NW-34S	04030221600000	PROD_OIL_INACTIVE	2003	34S	-2424	6149841	2289694
84S-34S	04030226870000	PROD_OIL_INACTIVE	2003	34S	-2568	6150622	2289419
88SW-34S	04030226880000	PROD_OIL_INACTIVE	2003	34S	-2212	6150252	2286855
226-34S-RD3	04030065870300	PROD_OIL_ACTIVE	2004	34S	-2309	6146456	2288162
27-34S-RD1	04029555890100	PROD_OIL_INACTIVE	2004	34S	-2173	6146450	2287619
32-34S-RD1	04029276420100	PROD_OIL_ACTIVE	2004	34S	-2447	6147159	2290957
33A-34S-RD1	04029581560100	PROD_OIL_ACTIVE	2004	34S	-2430	6147386	2290410
35NW-34S	04030248410000	PROD_OIL_ACTIVE	2004	34S	-2387	6147036	2289363

Wells Within 1/4 Mile Of Permit Area With No Penetration Of Reef Ridge Shale

WellName	API	Status	Completion Yr	Sec	TD (TVDss)	Surface X	Surface Y
45SE-34S	04030257700000	PROD_OIL_P & A	2004	34S	-2197	6147946	2288931
65NE-34S	04030239190000	PROD_OIL_P & A	2004	34S	-2319	6149278	2289242
72SE-34S	04030239240000	PROD_OIL_ACTIVE	2004	34S	-2495	6150107	2290796
74-34S-RD1	04030078870100	PROD_OIL_ACTIVE	2004	34S	-2336	6149543	2289481
75-34S-RD1	04030082450100	PROD_OIL_P & A	2004	34S	-2360	6149991	2288966
75-34S-RD2	04030082450200	PROD_OIL_INACTIVE	2004	34S	-2353	6149991	2288966
83NE-34S	04030259520000	PROD_OIL_ACTIVE	2004	34S	-2534	6150643	2290538
87-34S-RD2	04030190140200	PROD_OIL_P & A	2004	34S	-2465	6150524	2287468
87-34S-RD3	04030190140300	PROD_OIL_ACTIVE	2004	34S	-2448	6150524	2287468
115-34S-RD1	04029276560100	PROD_OIL_INACTIVE	2005	34S	-2261	6145870	2288952
13S-34S	04030282130000	PROD_OIL_ACTIVE	2005	34S	-2508	6145744	2290282
13X-34S	04030282140000	PROD_OIL_INACTIVE	2005	34S	-2470	6145740	2290303
63SE-34S	04030284530000	PROD_OIL_ACTIVE	2005	34S	-2422	6149638	2289827
71X-34S-RD1	04029562100100	PROD_OIL_ACTIVE	2005	34S	-2829	6149944	2291306
72S-34S	04030281770000	PROD_OIL_INACTIVE	2005	34S	-2459	6149986	2290272
74E-34S	04030285200000	PROD_OIL_ACTIVE	2005	34S	-2410	6149822	2289424
74SE-34S	04030284990000	PROD_OIL_INACTIVE	2005	34S	-2421	6149828	2289395
75N-34S	04030280190000	MON_PSI_P & A	2005	34S	-2325	6150041	2289012
75N-34S-RD1	04030280190100	MON_PSI_APPROVED	2005	34S	-2326	6150041	2289012
75SW-34S	04030285000000	PROD_OIL_INACTIVE	2005	34S	-2375	6149776	2288516
83-34S	04030281760000	PROD_OIL_ACTIVE	2005	34S	-2502	6150007	2290270
13NE-34S	04030306760000	PROD_OIL_ACTIVE	2006	34S	-2395	6145789	2290451
23SE-34S-RD1	04030217320100	PROD_OIL_ACTIVE	2006	34S	-2357	6146948	2290077
24E-34S	04030306980000	PROD_OIL_ACTIVE	2006	34S	-2342	6146465	2289532
24W-34S	04030306170000	PROD_OIL_INACTIVE	2006	34S	-2279	6146281	2289418
25SE-34S	04030307310000	PROD_OIL_ACTIVE	2006	34S	-2337	6146737	2289082
31SE-34S	04030314030000	PROD_OIL_ACTIVE	2006	34S	-2469	6147482	2291250
32S-34S	04030306160000	PROD_OIL_ACTIVE	2006	34S	-2484	6147098	2291006
33E-34S	04030307290000	PROD_OIL_INACTIVE	2006	34S	-2387	6147564	2289998
35N-34S	04030307300000	PROD_OIL_ACTIVE	2006	34S	-2377	6147293	2289203
43E-34S	04030313440000	PROD_OIL_ACTIVE	2006	34S	-2519	6148309	2290413
44W-34S	04030307320000	PROD_OIL_ACTIVE	2006	34S	-2393	6147679	2289313
51SE-34S	04030306770000	PROD_OIL_ACTIVE	2006	34S	-2660	6148984	2291639
53NE-34S	04030314020000	PROD_OIL_P & A	2006	34S	-2604	6148684	2290800
53NE-34S-RD1	04030314020100	PROD_OIL_ACTIVE	2006	34S	-2619	6148684	2290800
78-34S-RD1	04030225310100	INJ_GAS_ACTIVE	2006	34S	-2223	6149797	2287184
32N-34S	04030366930000	PROD_OIL_ACTIVE	2008	34S	-2612	6147159	2291113
32SE-34S	04030366940000	PROD_OIL_ACTIVE	2008	34S	-2617	6147565	2290469
38E-34S	04030378190000	PROD_OIL_ACTIVE	2008	34S	-2211	6147509	2287131
41NE-34S	04030345920000	PROD_OIL_ACTIVE	2008	34S	-2809	6147955	2291939
42SE-34S	04030366950000	PROD_OIL_ACTIVE	2008	34S	-2681	6148356	2290859
43A-34S	04030366920000	PROD_OIL_ACTIVE	2008	34S	-2663	6147867	2290318
44NW-34S	04030348710000	PROD_OIL_ACTIVE	2008	34S	-2653	6147540	2289673
52NW-34S	04030370910000	PROD_OIL_ACTIVE	2008	34S	-2759	6148602	2291118
61-34S	04030370900000	PROD_OIL_ACTIVE	2008	34S	-2797	6149247	2291424
61SW-34S	04030370930000	PROD_OIL_ACTIVE	2008	34S	-2743	6149226	2291403
61X-34S	04030370940000	PROD_OIL_ACTIVE	2008	34S	-2838	6149632	2291817
62W-34S	04030367430000	PROD_OIL_ACTIVE	2008	34S	-2782	6149043	2291048
67SE-34S	04030361880000	PROD_OIL_ACTIVE	2008	34S	-2359	6149287	2287243
81NW-34S	04030370920000	PROD_OIL_ACTIVE	2008	34S	-2864	6150474	2291741
84X-34S	04030361900000	PROD_OIL_INACTIVE	2008	34S	-2402	6150230	2290080

Wells Within 1/4 Mile Of Permit Area With No Penetration Of Reef Ridge Shale

WellName	API	Status	Completion Yr	Sec	TD (TVDss)	Surface X	Surface Y
86-34S	04030361720000	PROD_OIL_ACTIVE	2008	34S	-2357	6150707	2288274
21-35S	04029277060000	PROD_OIL_P & A	1920	35S	-2093	6155748	2286674
22-35S	04029277070000	PROD_OIL_P & A	1920	35S	-2103	6155756	2287417
25-35S	04029277090000	PROD_OIL_P & A	1920	35S	-2314	6155764	2288532
31-35S	04029277150000	PROD_OIL_P & A	1920	35S	-2489	6155798	2291485
57-35S	04029277290000	PROD_OIL_P & A	1920	35S	-2193	6155145	2287440
112-35S	04029277570000	PROD_OIL_P & A	1921	35S	-2147	6154413	2288852
113-35S	04029277580000	PROD_OIL_P & A	1921	35S	-2193	6154469	2288156
18-35S	04029277040000	PROD_OIL_P & A	1921	35S	-2129	6154576	2286858
19-35S	04029277050000	PROD_OIL_P & A	1921	35S	-2221	6155163	2286843
23-35S	04029277080000	PROD_OIL_P & A	1921	35S	-2298	6155760	2287948
26-35S	04029277100000	PROD_OIL_P & A	1921	35S	-2387	6155771	2289122
28-35S	04029277120000	PROD_OIL_P & A	1921	35S	-2516	6155785	2290314
30-35S	04029277140000	PROD_OIL_P & A	1921	35S	-2516	6155792	2290894
32-35S	04029277160000	PROD_OIL_P & A	1921	35S	-2442	6155212	2291490
35D-35S	04029277190000	PROD_OIL_P & A	1921	35S	-2700	6154054	2291601
37-35S	04029277210000	PROD_OIL_P & A	1921	35S	-2505	6152882	2291585
52-35S	04029277260000	PROD_OIL_P & A	1921	35S	-1994	6153066	2287496
54-35S	04029277270000	PROD_OIL_P & A	1921	35S	-2205	6153758	2287478
55-35S	04029277280000	PROD_OIL_P & A	1921	35S	-2216	6154458	2287460
58-35S	04029277300000	PROD_OIL_P & A	1921	35S	-2235	6155163	2288033
60-35S	04029277310000	PROD_OIL_P & A	1921	35S	-2302	6155164	2288548
61-35S	04029277320000	PROD_OIL_P & A	1921	35S	-2302	6155170	2289062
62-35S	04029277330000	PROD_OIL_P & A	1921	35S	-2274	6155176	2289576
63-35S	04029277340000	PROD_OIL_INACTIVE	1921	35S	-2302	6155184	2290238
105-35S	04029277520001	MON_PSI_APPROVED	1922	35S	-2101	6153775	2288858
106-35S	04029277530000	PROD_OIL_P & A	1922	35S	-2164	6153771	2288164
11-35S	04029276980000	PROD_OIL_P & A	1922	35S	-1966	6151065	2286898
1-35S	04029276900000	PROD_OIL_P & A	1922	35S	-2352	6151076	2291637
14-35S	04029277000000	PROD_OIL_P & A	1922	35S	-2042	6152238	2286868
15-35S	04029277010000	PROD_OIL_P & A	1922	35S	-2049	6152824	2286852
21-35S-RD1	04029277060100	PROD_OIL_P & A	1922	35S	-2188	6155748	2286674
2-35S	04029276910000	PROD_OIL_P & A	1922	35S	-2286	6151074	2291051
27-35S	04029277110000	PROD_OIL_P & A	1922	35S	-2342	6155785	2289706
36-35S	04029277200000	PROD_OIL_P & A	1922	35S	-2495	6153469	2291558
49-35S	04029277240000	PROD_OIL_P & A	1922	35S	-2001	6151672	2287532
51-35S	04029277250000	PROD_OIL_P & A	1922	35S	-2044	6152369	2287516
61-35S-RD1	04029277320100	PROD_OIL_P & A	1922	35S	-2252	6155170	2289062
65-35S	04029277350000	PROD_OIL_P & A	1922	35S	-2372	6155262	2290889
9-35S	04029276970000	PROD_OIL_P & A	1922	35S	-1954	6151022	2287535
21-35S-RD2	04029277060200	PROD_OIL_P & A	1923	35S	-2140	6155748	2286674
38-35S	04029277220000	PROD_OIL_P & A	1923	35S	-2589	6152300	2291698
40-35S	04029277230000	PROD_OIL_P & A	1923	35S	-2371	6151714	2291717
58-35S-RD1	04029277300100	PROD_OIL_P & A	1923	35S	-2195	6155163	2288033
87-35S	04029277440000	PROD_OIL_P & A	1923	35S	-2494	6153116	2291016
92-35S	04029277480000	PROD_OIL_P & A	1923	35S	-2045	6153077	2288172
101-35S	04029277490000	PROD_OIL_P & A	1924	35S	-2521	6153810	2290913
102-35S	04029277500000	PROD_OIL_P & A	1924	35S	-2524	6153800	2290247
103-35S	04029277510000	PROD_OIL_P & A	1924	35S	-2277	6153789	2289551
109-35S	04029277550000	PROD_OIL_P & A	1924	35S	-2354	6154497	2290239
22-35S-RD1	04029277070100	PROD_OIL_P & A	1924	35S	-2242	6155756	2287417

Wells Within 1/4 Mile Of Permit Area With No Penetration Of Reef Ridge Shale

WellName	API	Status	Completion Yr	Sec	TD (TVDss)	Surface X	Surface Y
227-35S	04029277630000	PROD_OIL_INACTIVE	1924	35S	-2428	6155784	2289656
28-35S-RD1	04029277120100	OIL PRODUCER	1924	35S	-2466	6155785	2290314
34-35S	04029277180000	PROD_OIL_P & A	1924	35S	-2526	6154639	2291493
34-35S-RD1	04029277180100	PROD_OIL_INACTIVE	1924	35S	-2526	6154639	2291493
4-35S	04029276920000	PROD_OIL_P & A	1924	35S	-2276	6151064	2290463
5-35S	04029276930000	PROD_OIL_P & A	1924	35S	-2255	6151056	2289875
6-35S	04029276940000	PROD_OIL_P & A	1924	35S	-2185	6151047	2289286
73-35S	04029277360000	PROD_OIL_P & A	1924	35S	-2464	6151723	2291014
7-35S	04029276950000	PROD_OIL_P & A	1924	35S	-2171	6151040	2288705
74-35S	04029277370000	PROD_OIL_P & A	1924	35S	-2351	6151711	2290276
77-35S	04029277390000	PROD_OIL_P & A	1924	35S	-2208	6151693	2288904
80-35S	04029277400000	PROD_OIL_P & A	1924	35S	-2480	6152398	2291022
8-35S	04029276960000	PROD_OIL_P & A	1924	35S	-2162	6151031	2288120
84-35S	04029277420000	PROD_OIL_P & A	1924	35S	-2228	6152390	2288884
85-35S	04029277430000	PROD_OIL_P & A	1924	35S	-2074	6152378	2288199
89-35S	04029277460000	PROD_OIL_P & A	1924	35S	-2546	6153096	2289560
91-35S	04029277470000	PROD_OIL_P & A	1924	35S	-2163	6153088	2288866
108-35S	04029277540000	PROD_OIL_P & A	1925	35S	-2437	6154507	2290904
110-35S	04029277560000	PROD_OIL_P & A	1925	35S	-2284	6154487	2289543
122-35S	04029277590000	PROD_OIL_P & A	1925	35S	-2201	6155700	2286829
28-35S-RD2	04029277120200	OIL PRODUCER	1925	35S	-2466	6155785	2290314
82-35S	04029277410000	PROD_OIL_P & A	1925	35S	-2377	6152398	2289566
88-35S	04029277450000	PROD_OIL_ACTIVE	1925	35S	-2389	6153106	2290256
17-35S	04029277030000	PROD_OIL_P & A	1926	35S	-2097	6153995	2286872
208-35S	04029277610000	PROD_OIL_P & A	1926	35S	-2294	6151229	2287968
52-35S-RD1	04029277260100	PROD_OIL_P & A	1926	35S	-2045	6153066	2287496
75-35S	04029277380000	PROD_OIL_P & A	1926	35S	-2295	6151701	2289588
13-35S	04029276990000	PROD_OIL_P & A	1927	35S	-1994	6151652	2286883
16-35S	04029277020000	INJ_GAS_ACTIVE	1927	35S	-2169	6153402	2286835
1-35S-RD1	04029276900100	PROD_OIL_P & A	1933	35S	-2360	6151076	2291637
38-35S-RD1	04029277220100	PROD_OIL_P & A	1933	35S	-2544	6152300	2291698
85-35S-RD1	04029277430100	PROD_OIL_P & A	1934	35S	-1424	6152378	2288199
28-35S-RD3	04029277120300	ABANDONED OIL	1936	35S	-2416	6155785	2290314
58-35S-RD2	04029277300200	PROD_OIL_P & A	1937	35S	-2235	6155163	2288033
22-35S-RD2	04029277070200	PROD_OIL_P & A	1938	35S	-2242	6155756	2287417
260-35S	04029277660001	MON_PSI_APPROVED	1941	35S	-2240	6155316	2288570
2113-35S	04029277840000	PROD_OIL_P & A	1942	35S	-2211	6154613	2288190
223-35S	04029277620000	PROD_OIL_INACTIVE	1945	35S	-3445	6155674	2288020
33-35S	04029277170000	PROD_OIL_P & A	1945	35S	-2497	6152410	2290248
126-35S	04029277600000	PROD_OIL_P & A	1953	35S	-2475	6152886	2290636
228-35S	04029277640000	PROD_OIL_P & A	1953	35S	-2518	6155926	2290362
273-35S	04029277670000	PROD_OIL_P & A	1953	35S	-2429	6151613	2291004
240-35S	04029277650000	PROD_OIL_P & A	1954	35S	-2423	6151260	2291490
274-35S	04029277680000	PROD_OIL_ACTIVE	1954	35S	-2345	6151552	2290167
280-35S	04029277690000	PROD_OIL_P & A	1954	35S	-2483	6152284	2291144
280-35S-RD1	04029277690100	PROD_OIL_INACTIVE	1963	35S	-2498	6152284	2291144
289-35S	04029526830000	PROD_OIL_P & A	1976	35S	-2493	6152922	2289518
21X-35S	04029560910000	PROD_OIL_P & A	1977	35S	-2528	6152026	2291629
265-35S	04029556320000	PROD_OIL_P & A	1977	35S	-3638	6155368	2290884
265-35S-RD1	04029556320100	PROD_OIL_P & A	1977	35S	-2508	6155368	2290884
42A-35S	04029561360001	MON_PSI_APPROVED	1977	35S	-2463	6153102	2291084

Wells Within 1/4 Mile Of Permit Area With No Penetration Of Reef Ridge Shale

WellName	API	Status	Completion Yr	Sec	TD (TVDss)	Surface X	Surface Y
53X-35S	04029562150000	PROD_OIL_P & A	1977	35S	-2548	6153674	2290477
54X-35S	04029556710000	PROD_OIL_INACTIVE	1977	35S	-2342	6153788	2289776
63X-35S	04029565110000	PROD_OIL_INACTIVE	1977	35S	-2266	6154197	2290240
64X-35S	04029555930002	INJ_GAS_INACTIVE	1977	35S	-2460	6154495	2289920
65X-35S	04029559700000	PROD_OIL_P & A	1977	35S	-3463	6154268	2288640
33X-35S	04029572740001	MON_PSI_APPROVED	1978	35S	-2432	6152066	2290576
34X-35S	04029575320000	PROD_OIL_ACTIVE	1978	35S	-2399	6152306	2289672
44X-35S	04029571960000	PROD_OIL_P & A	1978	35S	-2451	6152822	2289810
65A-35S	04029576910002	MON_PSI_APPROVED	1978	35S	-2342	6154278	2289273
83X-35S	04029572730000	PROD_OIL_P & A	1978	35S	-2392	6155960	2290086
83X-35S-RD1	04029572730100	PROD_OIL_P & A	1978	35S	-2433	6155960	2290086
83X-35S-RD2	04029572730201	MON_PSI_APPROVED	1978	35S	-2392	6155960	2290086
206-35S	04029716260000	PROD_OIL_P & A	1984	35S	-2300	6150998	2289396
225-35S-RD1	04029752470100	PROD_OIL_P & A	1985	35S	-2296	6155872	2288619
4-225-35S	04029752470001	PROD_GAS_INACTIVE	1985	35S	-2385	6155872	2288619
73-35S-RD1	04029277360100	PROD_OIL_P & A	1985	35S	-2464	6151723	2291014
73X-35S	04029754420000	PROD_OIL_P & A	1985	35S	-2600	6155197	2290626
73X-35S-RD1	04029754420100	PROD_OIL_INACTIVE	1985	35S	-2344	6155197	2290626
82X-35S	04029776700000	PROD_OIL_P & A	1986	35S	-2530	6155956	2290493
82X-35S-RD1	04029776700100	PROD_OIL_P & A	1986	35S	-2550	6155956	2290493
82X-35S-RD2	04029776700200	PROD_OIL_P & A	1986	35S	-2280	6155956	2290493
72X-35S	04029798070000	PROD_OIL_P & A	1987	35S	-2612	6154940	2291097
72X-35S-RD1	04029798070100	PROD_OIL_ACTIVE	1987	35S	-2426	6154940	2291097
204-35S	04030002910000	PROD_OIL_ACTIVE	1992	35S	-2460	6151041	2290412
16X-35S	04030009450000	PROD_OIL_P & A	1993	35S	-2245	6151166	2288431
5-35S-RD1	04029276930100	PROD_OIL_INACTIVE	1995	35S	-2285	6151056	2289875
63NE-35S	04030046980000	PROD_OIL_P & A	1995	35S	-2244	6155199	2289749
63NE-35S-RD1	04030046980100	PROD_OIL_P & A	1995	35S	-2370	6155199	2289749
84A-35S	04030074260000	PROD_OIL_ACTIVE	1997	35S	-2406	6155823	2289429
13X-35S	04030123330000	PROD_OIL_INACTIVE	1998	35S	-2279	6150989	2290083
153-35S	04030108750000	PROD_OIL_INACTIVE	1998	35S	-2540	6153088	2290538
15S-35S	04030108180000	PROD_OIL_INACTIVE	1998	35S	-2315	6151035	2288915
16SW-35S	04030125690000	PROD_OIL_INACTIVE	1998	35S	-2266	6151012	2288338
23A-35S	04030121360000	PROD_OIL_P & A	1998	35S	-2430	6152067	2290543
23A-35S-RD1	04030121360100	DRY HOLE	1998	35S	-2639	6152067	2290543
25A-35S	04030121370000	PROD_OIL_ACTIVE	1998	35S	-2375	6151906	2288910
34S-35S	04030121380000	PROD_OIL_ACTIVE	1998	35S	-3310	6152603	2288996
61A-35S	04030123340000	PROD_OIL_INACTIVE	1998	35S	-3970	6154634	2291669
35D-35S-RD1	04029277190100	PROD_OIL_INACTIVE	1999	35S	585	6154052	2291651
63N-35S	04030134330000	PROD_OIL_INACTIVE	1999	35S	-2465	6154579	2290401
66X-35S	04030138270001	INJ_GAS_ACTIVE	1999	35S	-3313	6154587	2288204
265-35S-RD2	04029556320200	PROD_OIL_INACTIVE	2001	35S	-2572	6155368	2290884
78-35S	04030186550000	PROD_OIL_P & A	2001	35S	-2522	6155260	2286974
78-35S-RD1	04030186550100	PROD_OIL_INACTIVE	2001	35S	-2507	6155260	2286974
82X-35S-RD3	04029776700300	PROD_OIL_P & A	2001	35S	-2603	6155956	2290493
82X-35S-RD4	04029776700400	PROD_OIL_INACTIVE	2001	35S	-2592	6155956	2290493
83NW-35S	04030183090000	PROD_OIL_INACTIVE	2001	35S	-2704	6155489	2290261
88NE-35S	04030177930000	PROD_OIL_ACTIVE	2001	35S	-3276	6155834	2287095
16X-35S-RD1	04030009450100	PROD_OIL_INACTIVE	2002	35S	-2817	6151166	2288431
24SE-35S	04030207280000	PROD_OIL_INACTIVE	2002	35S	-2500	6152028	2289328
25NW-35S	04030213910000	PROD_OIL_ACTIVE	2002	35S	-2449	6151639	2289267

Wells Within 1/4 Mile Of Permit Area With No Penetration Of Reef Ridge Shale

WellName	API	Status	Completion Yr	Sec	TD (TVDss)	Surface X	Surface Y
34SE-35S	04030211810000	PROD_OIL_ACTIVE	2002	35S	-2546	6152530	2289306
37W-35S	04030195880000	PROD_OIL_ACTIVE	2002	35S	-2405	6152202	2287494
44X-35S-RD1	04029571960100	PROD_OIL_INACTIVE	2002	35S	-2820	6152822	2289810
45X-35S	04030138260000	PROD_OIL_P & A	2002	35S	260	6153161	2288921
52NE-35S	04030208730000	PROD_OIL_ACTIVE	2002	35S	-2809	6153974	2290976
53X-35S-RD1	04029562150100	PROD_OIL_ACTIVE	2002	35S	-2601	6153674	2290477
61N-35S	04030200970000	PROD_OIL_ACTIVE	2002	35S	-2980	6154660	2291748
72W-35S	04030195890000	PROD_OIL_ACTIVE	2002	35S	-2659	6154818	2290851
75SE-35S	04030210020000	PROD_OIL_ACTIVE	2002	35S	-2507	6155373	2288460
15NW-35S	04030230490000	PROD_OIL_ACTIVE	2003	35S	-2423	6151146	2289102
15SE-35S	04030225030000	PROD_OIL_ACTIVE	2003	35S	-2445	6151295	2288938
17N-35S	04030222500000	PROD_OIL_ACTIVE	2003	35S	-2234	6151152	2288006
17SE-35S	04030237100000	PROD_OIL_INACTIVE	2003	35S	-2239	6151127	2287490
206-35S-RD1	04029716260100	PROD_OIL_INACTIVE	2003	35S	-2434	6150998	2289396
24NE-35S	04030226890000	PROD_OIL_ACTIVE	2003	35S	-2532	6151960	2289784
25E-35S	04030223780000	PROD_OIL_ACTIVE	2003	35S	-2510	6152051	2288964
43SE-35S	04030210010000	PROD_OIL_ACTIVE	2003	35S	-2650	6153281	2290115
56NW-35S	04030236870000	PROD_OIL_ACTIVE	2003	35S	-2499	6153430	2288075
63NE-35S-RD2	04030046980200	PROD_OIL_INACTIVE	2003	35S	-2505	6155199	2289749
63W-35S	04030230500000	PROD_OIL_P & A	2003	35S	-2432	6154545	2290251
71-35S	04030235200000	PROD_OIL_P & A	2003	35S	-2998	6155192	2291368
71-35S-RD1	04030235200100	PROD_OIL_P & A	2003	35S	-3055	6155192	2291368
88E-35S	04030224860000	PROD_OIL_INACTIVE	2003	35S	-2374	6155850	2286975
126-35S-RD1	04029277600100	PROD_OIL_ACTIVE	2004	35S	-2669	6152886	2290636
13S-35S	04030259500000	PROD_OIL_ACTIVE	2004	35S	-2507	6151105	2289700
24-35S	04030254360000	PROD_OIL_ACTIVE	2004	35S	-2401	6151570	2289467
33-35S-RD1	04029277170100	PROD_OIL_ACTIVE	2004	35S	-2605	6152410	2290248
56-35S	04030245720000	PROD_OIL_ACTIVE	2004	35S	-2371	6153731	2288485
74NW-35S	04030251130000	PROD_OIL_ACTIVE	2004	35S	-2464	6155167	2289560
84NE-35S	04030260840000	PROD_OIL_ACTIVE	2004	35S	-2498	6155999	2290070
85NE-35S	04030260850000	PROD_OIL_INACTIVE	2004	35S	-2404	6155877	2289124
15X-35S	04030283610000	PROD_OIL_ACTIVE	2005	35S	-2361	6151567	2289208
24S-35S	04030283600000	PROD_OIL_ACTIVE	2005	35S	-2386	6151567	2289188
25SE-35S	04030283220000	PROD_OIL_ACTIVE	2005	35S	-2425	6152091	2288542
25X-35S	04030282150000	PROD_OIL_ACTIVE	2005	35S	-2401	6151897	2289088
34SW-35S	04030283230000	PROD_OIL_ACTIVE	2005	35S	-2462	6152367	2289361
46-35S	04030277780000	PROD_OIL_INACTIVE	2005	35S	-2299	6153014	2288410
47NE-35S	04030277800000	PROD_OIL_INACTIVE	2005	35S	-2300	6153161	2287826
56XH-35S	04030283620000	PROD_OIL_ACTIVE	2005	35S	-1980	6153643	2287772
63W-35S-RD1	04030230500100	PROD_OIL_ACTIVE	2005	35S	-2492	6154545	2290251
27H-35S	04030317240000	PROD_OIL_ACTIVE	2006	35S	-1970	6152319	2287823
45H-35S	04030318450000	PROD_OIL_ACTIVE	2006	35S	-1996	6153081	2288922
68NE-35S	04030294980000	INJ_GAS_ACTIVE	2006	35S	-2394	6154415	2286953
78SW-35S	04030306780000	PROD_OIL_ACTIVE	2006	35S	-2459	6155149	2286988
13N-35S	04030328510000	PROD_OIL_ACTIVE	2007	35S	-2378	6150886	2290061
13SW-35S	04030328520000	PROD_OIL_ACTIVE	2007	35S	-2441	6150938	2289370
44S-35S	04030343200000	PROD_OIL_ACTIVE	2007	35S	-2834	6152824	2289074
73N-35S	04030331370000	PROD_OIL_ACTIVE	2007	35S	-2658	6155302	2290683
12-35S	04030348750000	PROD_OIL_ACTIVE	2008	35S	-2780	6151589	2290890
15A-35S	04030361870000	PROD_OIL_ACTIVE	2008	35S	-2418	6151106	2288946
16A-35S	04030361730000	PROD_OIL_ACTIVE	2008	35S	-2400	6150942	2288409

Wells Within 1/4 Mile Of Permit Area With No Penetration Of Reef Ridge Shale

WellName	API	Status	Completion Yr	Sec	TD (TVDss)	Surface X	Surface Y
21A-35S	04030348720000	PROD_OIL_ACTIVE	2008	35S	-2982	6151950	2291230
33E-35S	04030361740000	PROD_OIL_ACTIVE	2008	35S	-2744	6152819	2290417
33NE-35S	04030361750000	PROD_OIL_ACTIVE	2008	35S	-2754	6152823	2290446
52SW-35S	04030361890000	PROD_OIL_ACTIVE	2008	35S	-2960	6153647	2290904
72-35S	04030373420000	PROD_OIL_ACTIVE	2008	35S	-2612	6155041	2290936
10-36S	04029277950000	PROD_OIL_P & A	1920	36S	-2521	6156414	2291478
11-36S	04029277960000	PROD_OIL_P & A	1920	36S	-2271	6156378	2287950
12-36S	04029277970000	PROD_OIL_P & A	1920	36S	-2367	6156372	2288524
1-36S	04029277860000	PROD_OIL_P & A	1920	36S	-2294	6156856	2287312
2-36S	04029277870000	PROD_OIL_P & A	1920	36S	-2253	6156360	2287359
4-36S	04029277890000	PROD_OIL_P & A	1920	36S	-2243	6156344	2286810
5-36S	04029277900000	PROD_OIL_P & A	1920	36S	-2294	6156949	2286766
6-36S	04029277910000	PROD_OIL_P & A	1920	36S	-2299	6156952	2287936
11-36S-RD1	04029277960100	PROD_OIL_P & A	1921	36S	-2337	6156378	2287950
13-36S	04029277980000	PROD_OIL_P & A	1921	36S	-2347	6156920	2288493
18-36S	04029278030000	PROD_OIL_P & A	1921	36S	-2606	6156415	2290875
19-36S	04029278040000	PROD_OIL_P & A	1921	36S	-2417	6156382	2289714
20-36S	04029278050000	PROD_OIL_P & A	1921	36S	-2418	6156397	2289110
21-36S	04029278060000	PROD_OIL_P & A	1921	36S	-2589	6156396	2290293
22-36S	04029278070000	PROD_OIL_P & A	1921	36S	-2455	6156962	2289105
22-36S-RD1	04029278070100	PROD_OIL_P & A	1921	36S	-2455	6156962	2289105
26-36S	04029278110000	PROD_OIL_P & A	1921	36S	-2514	6156955	2289689
27-36S	04029278120000	PROD_OIL_P & A	1921	36S	-2705	6156992	2291465
39-36S	04029278240000	PROD_OIL_P & A	1921	36S	-2636	6157018	2290868
40-36S	04029278250000	PROD_OIL_P & A	1921	36S	-2590	6156972	2290288
20-36S-RD1	04029278050100	PROD_OIL_P & A	1922	36S	-2418	6156397	2289110
27-36S-RD1	04029278120100	PROD_OIL_P & A	1923	36S	-2734	6156992	2291465
18-36S-RD1	04029278030100	PROD_OIL_P & A	1925	36S	-2796	6156415	2290875
21-36S-RD1	04029278060100	PROD_OIL_P & A	1925	36S	-2542	6156396	2290293
12	04029277970100	ABANDONED OIL	1934	36S	-2367	6156365	2288609
226-36S	04029278450000	PROD_OIL_INACTIVE	1954	36S	-2492	6156762	2289548
19-36S-RD1	04029278040100	PROD_OIL_INACTIVE	1961	36S	-2517	6156372	2289753
39-36S-RD1	04029278240100	PROD_OIL_INACTIVE	1963	36S	-2524	6157011	2290902
15X-36S	04029584190000	PROD_OIL_P & A	1979	36S	-2291	6156438	2288491
14X-36S	04029822080000	PROD_OIL_P & A	1988	36S	-2545	6156414	2289603
14X-36S-RD1	04029822080100	PROD_OIL_P & A	1988	36S	-2372	6156414	2289603
25NE-36S	04030131720000	PROD_OIL_P & A	1999	36S	-2535	6157142	2289044
25NE-36S-RD1	04030131720100	PROD_OIL_INACTIVE	1999	36S	-2528	6157142	2289044
27SE-36S	04030131710000	PROD_OIL_INACTIVE	1999	36S	-2364	6156945	2287384
17E-36S	04030188090000	PROD_OIL_P & A	2001	36S	-2585	6156486	2287367
17E-36S-RD1	04030188090100	PROD_OIL_P & A	2001	36S	-2786	6156486	2287367
24E-36S	04030183100000	PROD_OIL_ACTIVE	2001	36S	-2797	6157323	2289490
27NE-36S	04030168880000	PROD_OIL_ACTIVE	2001	36S	-2490	6157208	2287682
14X-36S-RD2	04029822080200	PROD_OIL_INACTIVE	2002	36S	-2621	6156414	2289603
11S-36S	04030235240000	PROD_OIL_INACTIVE	2003	36S	-2762	6156324	2291331
11SE-36S	04030224660000	PROD_OIL_ACTIVE	2003	36S	-2809	6156717	2291197
17E-36S-RD2	04030188090200	PROD_OIL_ACTIVE	2003	36S	-2755	6156486	2287367
17SW-36S	04030233770000	PROD_OIL_INACTIVE	2003	36S	-2399	6156472	2287449
18E-36S	04030220800000	PROD_OIL_ACTIVE	2003	36S	-2361	6156763	2286839
18SW-36S	04030217050001	INJ_GAS_ACTIVE	2003	36S	-2355	6156359	2286734
28NE-36S	04030218100000	PROD_OIL_ACTIVE	2003	36S	-2364	6157304	2286927

Wells Within 1/4 Mile Of Permit Area With No Penetration Of Reef Ridge Shale

WellName	API	Status	Completion Yr	Sec	TD (TVDss)	Surface X	Surface Y
14S-36S	04030250810000	PROD_OIL_ACTIVE	2004	36S	-2518	6156449	2289112
15N-36S	04030250800000	PROD_OIL_INACTIVE	2004	36S	-2499	6156463	2289090
16W-36S	04030260880000	PROD_OIL_ACTIVE	2004	36S	-2611	6156290	2288013
26N-36S	04030260870000	PROD_OIL_INACTIVE	2004	36S	-2463	6156710	2288585
26SE-36S	04030250820001	MON_PSI_APPROVED	2004	36S	-2577	6157265	2287732
28X-36S	04030225300000	PROD_OIL_INACTIVE	2004	36S	-2375	6156864	2286768
14SE-36S	04030276110000	PROD_OIL_ACTIVE	2005	36S	-2580	6156634	2289395
15SW-36S	04030276120000	PROD_OIL_ACTIVE	2005	36S	-2528	6156350	2288591
18S-36S	04030269820000	PROD_OIL_INACTIVE	2005	36S	-2305	6156411	2286683
18X-36S	04030281570000	PROD_OIL_INACTIVE	2005	36S	-1251	6156083	2286555
27X-36S	04030281580000	PROD_OIL_ACTIVE	2005	36S	-2458	6157203	2287613
28N-36S	04030281550000	PROD_OIL_INACTIVE	2005	36S	-2460	6157243	2286937
27S-36S	04030326010000	INJ_GAS_ACTIVE	2007	36S	-2497	6156897	2287517
1K-3G	04029290260000	PROD_OIL_P & A	1922	3G	-1961	6150543	2286409
6K-3G	04029290290000	PROD_OIL_P & A	1924	3G	-2014	6150536	2285807
2K-3G	04029290270000	PROD_OIL_P & A	1925	3G	-1958	6149806	2286410
3K-3G	04029290280000	PROD_OIL_P & A	1925	3G	-1959	6149288	2286414
1-3G	04029290300000	PROD_OIL_P & A	1927	3G	-700	6147882	2283819
21-3G	04029290080001	MON_PSI_APPROVED	1943	3G	-2042	6146500	2286378
54-3G	04029290110001	MON_PSI_APPROVED	1943	3G	-2115	6148474	2284333
76-3G	04029290140000	PROD_OIL_P & A	1944	3G	-2105	6149794	2283108
85-3G	04029290160000	PROD_OIL_P & A	1944	3G	-2085	6150456	2283760
25-3G	04029290090000	PROD_OIL_P & A	1945	3G	-1988	6146438	2283819
58-3G	04029290120000	PROD_OIL_P & A	1945	3G	-2180	6148480	2281773
78-3G	04029290150000	PROD_OIL_P & A	1945	3G	-2247	6149758	2281712
87-3G	04029290170001	MON_PSI_APPROVED	1945	3G	-2195	6150422	2282286
38-3G	04029290100000	PROD_OIL_P & A	1951	3G	-2142	6147144	2281759
67-3G	04029290130000	INJ_GAS_ACTIVE	1952	3G	-2154	6149110	2282384
11-3G	04029533900000	PROD_OIL_P & A	1976	3G	-1970	6145600	2286448
28-3G	04029521630000	PROD_OIL_P & A	1976	3G	-2074	6146456	2281761
37-3G	04029521640000	PROD_OIL_ACTIVE	1976	3G	-2052	6147077	2282417
45-3G	04029521660000	PROD_OIL_P & A	1976	3G	-2028	6147794	2283636
48-3G	04029521670000	PROD_OIL_P & A	1976	3G	-2194	6147803	2281784
56-3G	04029534580000	PROD_OIL_INACTIVE	1976	3G	-2073	6148374	2283100
57-3G	04029521680000	PROD_OIL_P & A	1976	3G	-2148	6148445	2282394
64-3G	04029521690000	PROD_OIL_P & A	1976	3G	-2056	6149146	2284361
65-3G	04029531280001	MON_PSI_APPROVED	1976	3G	-2133	6149196	2283640
68-3G	04029521700000	PROD_OIL_P & A	1976	3G	-2235	6149094	2281779
77-3G	04029521710000	PROD_OIL_P & A	1976	3G	-2194	6149816	2282366
86-3G	04029521720000	PROD_OIL_P & A	1976	3G	-2181	6150392	2282994
18-3G	04029556080001	MON_PSI_APPROVED	1977	3G	-2057	6145807	2281815
27-3G	04029556090000	PROD_OIL_INACTIVE	1977	3G	-2074	6146474	2282384
36-3G	04029559730000	PROD_OIL_P & A	1977	3G	-2031	6147160	2283096
46-3G	04029565120000	PROD_OIL_P & A	1977	3G	-2032	6147740	2283050
46-3G-RD1	04029565120100	PROD_OIL_P & A	1977	3G	-1528	6147740	2283050
66-3G	04029559740000	PROD_OIL_P & A	1977	3G	-2097	6149219	2283038
47-3G	04029572390000	PROD_OIL_INACTIVE	1978	3G	-2142	6147750	2282366
3-88-3G	04029686530000	PROD_OIL_P & A	1983	3G	-7061	6150422	2281710
58NE-3G	04029718220000	PROD_OIL_P & A	1984	3G	-2179	6148792	2282044
67NE-3G	04029716070001	MON_PSI_APPROVED	1984	3G	-2135	6149461	2282767
18E-3G	04029764250000	INJ_H2O_P & A	1985	3G	-2092	6146142	2281763

Wells Within 1/4 Mile Of Permit Area With No Penetration Of Reef Ridge Shale

WellName	API	Status	Completion Yr	Sec	TD (TVDss)	Surface X	Surface Y
18N-3G	04029768040000	INJ_H2O_INACTIVE	1985	3G	-2110	6145798	2282120
18NE-3G	04029765320000	PROD_OIL_P & A	1985	3G	-2183	6146100	2281834
18NE-3G-RD1	04029765320100	PROD_OIL_INACTIVE	1985	3G	-2034	6146100	2281834
4-17-3G	04029751240000	PROD_OIL_P & A	1985	3G	-2023	6145802	2282438
4-17-3G-RD1	04029751240100	PROD_OIL_P & A	1985	3G	-1981	6145802	2282438
16-3G	04029773130000	INJ_GAS_P & A	1986	3G	-2128	6145808	2283087
16-3G-RD1	04029773130100	INJ_GAS_P & A	1986	3G	-1936	6145808	2283087
18CS-3G	04029772410000	MON_PSI_APPROVED	1986	3G	-2131	6145756	2281480
18CW-3G	04029786920000	MON_PSI_APPROVED	1986	3G	-2109	6145720	2282119
28NE-3G	04029798150000	PROD_OIL_P & A	1987	3G	-1944	6146940	2281896
28NE-3G-RD1	04029798150100	PROD_OIL_P & A	1987	3G	-2192	6146940	2281896
17CX-3G	04029832980001	PROD_OIL_INACTIVE	1988	3G	-2101	6145698	2282458
28-3G-RD1	04029521630100	PROD_OIL_P & A	1988	3G	-1950	6146456	2281761
28-3G-RD2	04029521630200	PROD_OIL_P & A	1988	3G	-2053	6146456	2281761
17NE-3G	04029835320000	PROD_OIL_P & A	1989	3G	-2159	6146066	2282540
17NE-3G-RD1	04029835320101	MON_PSI_APPROVED	1989	3G	-1980	6146066	2282540
18EX-3G	04029836340000	INJ_H2O_P & A	1989	3G	-2137	6146270	2281566
47NE-3G	04029890550000	PROD_OIL_P & A	1991	3G	-2181	6148080	2282494
47NE-3G-RD1	04029890550100	PROD_OIL_P & A	1991	3G	-2046	6148080	2282494
56X-3G	04030000590000	PROD_OIL_P & A	1992	3G	-2188	6148024	2283244
56X-3G-RD1	04030000590100	PROD_OIL_ACTIVE	1992	3G	-2050	6148024	2283244
48-3G-RD1	04029521670100	PROD_OIL_P & A	1997	3G	-2200	6147803	2281784
64-3G-RD1	04029521690100	PROD_OIL_P & A	1997	3G	-2040	6149146	2284361
64-3G-RD2	04029521690200	PROD_OIL_P & A	1997	3G	-2059	6149146	2284361
68X-3G	04030083020000	PROD_OIL_P & A	1997	3G	-2331	6149456	2281948
28X-3G	04030121390000	PROD_OIL_ACTIVE	1998	3G	-2160	6146518	2281791
37E-3G	04030116860000	PROD_OIL_ACTIVE	1998	3G	-2166	6147008	2282425
54A-3G	04030112270000	PROD_OIL_P & A	1998	3G	-2140	6148603	2283950
64E-3G	04030127760000	PROD_OIL_P & A	1998	3G	-2110	6149745	2284323
64E-3G-RD1	04030127760100	PROD_OIL_ACTIVE	1998	3G	-2195	6149745	2284323
64S-3G	04030122170000	PROD_OIL_P & A	1998	3G	-2138	6149076	2284302
64S-3G-RD1	04030122170100	PROD_OIL_ACTIVE	1998	3G	-2107	6149076	2284302
68S-3G	04030112260000	PROD_OIL_ACTIVE	1998	3G	-2329	6148723	2281415
87E-3G	04030112490000	PROD_OIL_INACTIVE	1998	3G	-2271	6150427	2282377
54A-3G-RD1	04030112270100	PROD_OIL_ACTIVE	1999	3G	-2184	6148603	2283950
78-3G-RD1	04029290150100	PROD_OIL_ACTIVE	1999	3G	-2348	6149758	2281712
88SE-3G	04030133080000	PROD_OIL_ACTIVE	1999	3G	-2465	6150388	2281601
16W-3G	04030163260000	PROD_OIL_INACTIVE	2000	3G	-2199	6145493	2283058
38-3G-RD1	04029290100100	PROD_OIL_ACTIVE	2000	3G	-2296	6147144	2281759
71-3G	04030165720000	PROD_OIL_INACTIVE	2000	3G	-2258	6149954	2286344
88SW-3G	04030154050000	PROD_OIL_P & A	2000	3G	-2498	6150146	2281572
88SW-3G-RD1	04030154050100	PROD_OIL_INACTIVE	2000	3G	-2479	6150146	2281572
15NE-3G	04030192470000	PROD_OIL_ACTIVE	2001	3G	-2247	6146055	2283950
15SE-3G	04030177950000	PROD_OIL_ACTIVE	2001	3G	-2163	6145811	2283443
18SE-3G	04030178640000	PROD_OIL_ACTIVE	2001	3G	-2372	6146193	2281643
37S-3G	04030183120000	PROD_OIL_P & A	2001	3G	-2398	6147050	2282316
3-88-3G-RD2	04029686530200	PROD_OIL_ACTIVE	2001	3G	-2476	6150422	2281710
42-3G	04030181230000	PROD_OIL_INACTIVE	2001	3G	-2180	6148131	2285640
43-3G	04030193440000	PROD_OIL_ACTIVE	2001	3G	-2232	6147700	2284843
46-3G-RD2	04029565120200	PROD_OIL_ACTIVE	2001	3G	-2234	6147740	2283050
47E-3G	04030191930000	PROD_OIL_ACTIVE	2001	3G	-2424	6147830	2282538

Wells Within 1/4 Mile Of Permit Area With No Penetration Of Reef Ridge Shale

WellName	API	Status	Completion Yr	Sec	TD (TVDss)	Surface X	Surface Y
48-3G-RD2	04029521670200	PROD_OIL_ACTIVE	2001	3G	-2347	6147803	2281784
52-3G	04030188930000	PROD_OIL_ACTIVE	2001	3G	-2241	6148690	2285321
57-3G-RD1	04029521680100	PROD_OIL_ACTIVE	2001	3G	-2402	6148445	2282394
62-3G	04030193450000	PROD_OIL_ACTIVE	2001	3G	-2269	6148986	2285783
84NW-3G	04030181190000	PROD_OIL_P & A	2001	3G	-2242	6150162	2284557
88NW-3G	04030181040000	PROD_OIL_ACTIVE	2001	3G	-2498	6150088	2281986
11NW-3G	04030208720000	PROD_OIL_INACTIVE	2002	3G	-2105	6145663	2286571
28NE-3G-RD2	04029798150200	PROD_OIL_P & A	2002	3G	-2240	6146940	2281896
28NE-3G-RD3	04029798150300	PROD_OIL_ACTIVE	2002	3G	-2225	6146940	2281896
37S-3G-RD1	04030183120100	PROD_OIL_INACTIVE	2002	3G	-2232	6147050	2282316
48NE-3G	04030213730000	PROD_OIL_ACTIVE	2002	3G	-2310	6148012	2281830
56SE-3G	04030195850000	PROD_OIL_ACTIVE	2002	3G	-2424	6148672	2282938
66-3G-RD1	04029559740100	PROD_OIL_ACTIVE	2002	3G	-2221	6149219	2283038
68X-3G-RD1	04030083020100	PROD_OIL_P & A	2002	3G	-2474	6149456	2281948
86-3G-RD1	04029521720100	PROD_OIL_INACTIVE	2002	3G	-2436	6150392	2282994
18E-3G-RD1	04029764250100	PROD_OIL_INACTIVE	2003	3G	-2126	6146142	2281763
25-3G-RD1	04029290090100	PROD_OIL_P & A	2003	3G	-2178	6146438	2283819
28-3G-RD3	04029521630300	PROD_OIL_INACTIVE	2003	3G	-2119	6146456	2281761
47NE-3G-RD2	04029890550200	PROD_OIL_ACTIVE	2003	3G	-2199	6148080	2282494
58-3G-RD1	04029290120100	PROD_OIL_ACTIVE	2003	3G	-2440	6148480	2281773
68-3G-RD2	04029521700200	PROD_OIL_P & A	2003	3G	-2422	6149094	2281779
71N-3G	04030237090000	PROD_OIL_INACTIVE	2003	3G	-2197	6150018	2286355
76-3G-RD1	04029290140100	PROD_OIL_P & A	2003	3G	-2241	6149794	2283108
76-3G-RD2	04029290140200	PROD_OIL_ACTIVE	2003	3G	-2191	6149794	2283108
76NE-3G	04030226900000	PROD_OIL_ACTIVE	2003	3G	-2196	6149937	2283167
87SE-3G	04030225040000	PROD_OIL_ACTIVE	2003	3G	-2364	6150580	2281879
33-3G	04030239540000	PROD_OIL_ACTIVE	2004	3G	-2098	6147064	2284957
77-3G-RD1	04029521710100	INJ_GAS_ACTIVE	2004	3G	-2471	6149816	2282366
85-3G-RD1	04029290160100	INJ_GAS_ACTIVE	2004	3G	-2244	6150456	2283760
16-3G-RD2	04029773130200	INJ_GAS_ACTIVE	2005	3G	-2055	6145808	2283087
18EX-3G-RD1	04029836340100	PROD_OIL_INACTIVE	2005	3G	-2262	6146270	2281566
36-3G-RD1	04029559730100	INJ_GAS_ACTIVE	2005	3G	-2290	6147160	2283096
58NE-3G-RD1	04029718220100	PROD_OIL_ACTIVE	2005	3G	-2366	6148792	2282044
63-3G	04030274000000	INJ_GAS_P & A	2005	3G	-2040	6149222	2285333
78NE-3G	04030275640000	PROD_OIL_ACTIVE	2005	3G	-2434	6149944	2281994
24-3G	04030294960000	PROD_OIL_ACTIVE	2006	3G	-2150	6146508	2284483
74H-3G	04030317370000	PROD_OIL_ACTIVE	2006	3G	-1997	6149810	2284301
45-3G-RD1	04029521660100	PROD_OIL_ACTIVE	2007	3G	-2156	6147794	2283636
53-3G	04030332540000	PROD_OIL_ACTIVE	2007	3G	-2356	6148685	2285052
53N-3G	04030332550000	PROD_OIL_ACTIVE	2007	3G	-2258	6148714	2285042
53SE-3G	04030332690000	INJ_H2O_ACTIVE	2007	3G	-2275	6148763	2284711
54N-3G	04030332600000	PROD_OIL_ACTIVE	2007	3G	-2261	6148745	2284735
63E-3G	04030332680000	INJ_H2O_ACTIVE	2007	3G	-2259	6148742	2285034
63NE-3G	04030332560000	PROD_OIL_ACTIVE	2007	3G	-2277	6149285	2285342
63NW-3G	04030332570000	PROD_OIL_ACTIVE	2007	3G	-2254	6148771	2285025
63SE-3G	04030332580000	PROD_OIL_ACTIVE	2007	3G	-2273	6149255	2285350
63SW-3G	04030332590000	PROD_OIL_ACTIVE	2007	3G	-2284	6148800	2284664
64-3G-RD3	04029521690300	PROD_OIL_ACTIVE	2007	3G	-2202	6149146	2284361
64N-3G	04030332670000	INJ_H2O_ACTIVE	2007	3G	-2197	6148781	2284687
64NW-3G	04030332610000	PROD_OIL_INACTIVE	2007	3G	-2270	6148819	2284640
68-3G-RD3	04029521700300	PROD_OIL_DRILL	2007	3G	-2392	6149094	2281779

Wells Within 1/4 Mile Of Permit Area With No Penetration Of Reef Ridge Shale

WellName	API	Status	Completion Yr	Sec	TD (TVDss)	Surface X	Surface Y
42E-3G	04030366370000	INJ_H2O_ACTIVE	2008	3G	-2240	6148366	2285682
42N-3G	04030365770000	PROD_OIL_ACTIVE	2008	3G	-2242	6148133	2285720
42S-3G	04030365790000	PROD_OIL_ACTIVE	2008	3G	-2243	6148180	2285666
43E-3G	04030357620000	PROD_OIL_ACTIVE	2008	3G	-2275	6147649	2284897
44E-3G	04030365750000	PROD_OIL_ACTIVE	2008	3G	-2271	6148003	2284482
462-3G	04030373410000	PROD_GAS_ACTIVE	2008	3G	-1952	6149111	2285651
48E-3G	04030365760000	PROD_OIL_ACTIVE	2008	3G	-2425	6148089	2281624
52N-3G	04030365780000	PROD_OIL_ACTIVE	2008	3G	-2261	6148396	2285674
53NW-3G	04030366380000	INJ_H2O_ACTIVE	2008	3G	-2263	6148549	2285393
53SW-3G	04030366390000	INJ_H2O_ACTIVE	2008	3G	-2241	6148488	2284716
62N-3G	04030357630000	PROD_OIL_INACTIVE	2008	3G	-2220	6149071	2285729
62W-3G	04030366400000	INJ_H2O_ACTIVE	2008	3G	-2264	6148577	2285405
64X-3G	04030350320000	PROD_OIL_ACTIVE	2008	3G	-2278	6149063	2284392
87X-3G	04030357640000	PROD_OIL_ACTIVE	2008	3G	-2385	6150609	2282309
71-4G	04029290610000	PROD_OIL_P & A	1945	4G	-1863	6144584	2286364
73-4G	04029290620000	PROD_OIL_P & A	1945	4G	-1889	6144595	2285158
75-4G	04029290630000	PROD_OIL_P & A	1945	4G	-1943	6144516	2283775
78-4G	04029290640000	PROD_OIL_P & A	1945	4G	-1969	6144458	2281780
88-4G	04029505210000	PROD_OIL_P & A	1975	4G	-2631	6145132	2281770
72-4G	04029537550000	PROD_OIL_P & A	1976	4G	-1891	6144542	2285452
83-4G	04029541380000	PROD_OIL_INACTIVE	1976	4G	-1918	6145140	2285116
74-4G	04029556140000	PROD_OIL_INACTIVE	1977	4G	-1923	6144640	2284390
81-4G	04029545400000	PROD_OIL_P & A	1977	4G	-1917	6145236	2286470
88E-4G	04029770210000	INJ_H2O_INACTIVE	1985	4G	-2127	6145442	2281780
88NE-4G	04029771200000	PROD_OIL_P & A	1985	4G	-2055	6145452	2282120
88NE-4G-RD1	04029771200100	PROD_OIL_P & A	1985	4G	-1983	6145452	2282120
78N-4G	04030140180000	PROD_OIL_INACTIVE	1999	4G	-2048	6144452	2282215
78NE-4G	04030165710000	PROD_OIL_INACTIVE	2000	4G	-2029	6144517	2282152
87W-4G-RD1	04030154040100	PROD_OIL_INACTIVE	2000	4G	-2207	6144960	2282621
72-4G-RD1	04029537550100	PROD_OIL_ACTIVE	2001	4G	-2047	6144542	2285452
72N-4G	04030192350000	PROD_OIL_ACTIVE	2001	4G	-2202	6144954	2285726
77-4G	04030191210000	PROD_OIL_P & A	2001	4G	-2197	6144526	2282599
62NE-4G	04030207540000	PROD_OIL_ACTIVE	2002	4G	-1992	6144355	2285638
71W-4G	04030208210000	PROD_OIL_ACTIVE	2002	4G	-2046	6144253	2286439
78-4G-RD1	04029290640100	PROD_OIL_INACTIVE	2002	4G	-2136	6144458	2281780
78NW-4G	04030199110000	PROD_OIL_ACTIVE	2002	4G	-2288	6144082	2282087
81-4G-RD1	04029545400100	PROD_OIL_ACTIVE	2002	4G	-2085	6145236	2286470
71N-4G	04030221610000	PROD_OIL_ACTIVE	2003	4G	-1952	6144378	2286635
87N-4G	04030233460000	PROD_OIL_INACTIVE	2003	4G	-2100	6145183	2282866
88-4G-RD1	04029505210100	PROD_OIL_INACTIVE	2003	4G	-2126	6145132	2281770
88NE-4G-RD2	04029771200200	PROD_OIL_INACTIVE	2003	4G	-2106	6145452	2282120
75-4G-RD1	04029290630100	PROD_OIL_P & A	2004	4G	-2098	6144516	2283775
77-4G-RD1	04030191210100	PROD_OIL_ACTIVE	2004	4G	-2189	6144526	2282599
72SW-4G	04030369070000	PROD_OIL_ACTIVE	2008	4G	-2131	6144212	2285270
73SW-4G	04030369080000	PROD_OIL_ACTIVE	2008	4G	-2141	6144343	2285023
4-68E-33S	04030220390001	PROD_GAS_ACTIVE	2003	68E	-1936	6144160	2287021
4-75N-33S	04030201220001	PROD_GAS_ACTIVE	2002	75N	-2468	6144284	2289493
4-83NW-3G	04030189850000	PROD_OIL_P & A	2001	83NW	-1348	6150296	2285054
4-83NW-3G-RD1	04030189850100	PROD_OIL_P & A	2001	83NW	-2229	6150296	2285054
4-83NW-3G-RD2	04030189850200	PROD_OIL_P & A	2002	83NW	-2101	6150296	2285054
4-88NE-34S	04030215920001	PROD_GAS_P & A	2003	88NE	-2549	6150735	2287087

Wells Within 1/4 Mile Of Permit Area With No Penetration Of Reef Ridge Shale

WellName	API	Status	Completion Yr	Sec	TD (TVDss)	Surface X	Surface Y
81-9G	04029291830000	PROD_OIL_P & A	1945	9G	-2025	6145072	2281163
72-9G	04029291790000	PROD_OIL_P & A	1951	9G	-2065	6144546	2280409
71-9G	04029519470000	PROD_OIL_P & A	1975	9G	-2026	6144428	2281146
82-9G	04029519490000	INJ_GAS_P & A	1975	9G	-2241	6145124	2280454
81NE-9G	04029771430000	PROD_OIL_P & A	1986	9G	-2096	6145427	2281406
81NE-9G-RD1	04029771430100	PROD_OIL_INACTIVE	1986	9G	-2044	6145427	2281406
71NE-9G	04029835330000	PROD_OIL_P & A	1988	9G	-2207	6144929	2281430
71NE-9G-RD1	04029835330100	PROD_OIL_P & A	1988	9G	-2036	6144929	2281430
82A-9G	04030000610000	PROD_OIL_P & A	1992	9G	-2185	6145122	2280506
82NE-9G	04030126080000	PROD_OIL_INACTIVE	1998	9G	-2173	6145132	2280535
71-9G-RD1	04029519470100	PROD_OIL_INACTIVE	2000	9G	-2092	6144428	2281146
71NE-9G-RD2	04029835330200	PROD_OIL_INACTIVE	2000	9G	-2172	6144929	2281430
72-9G-RD1	04029291790100	PROD_OIL_ACTIVE	2001	9G	-2209	6144546	2280409
82E-9G	04030191920000	PROD_OIL_ACTIVE	2001	9G	-2461	6145353	2280806
82A-9G-RD1	04030000610100	PROD_OIL_ACTIVE	2004	9G	-2270	6145122	2280506
81-9G-RD2	04029291830200	PROD_OIL_ACTIVE	2005	9G	-2312	6145072	2281163
82-9G-RD1	04029519490100	INJ_GAS_INACTIVE	2005	9G	-2398	6145124	2280454
82SW-9G	04030304210000	INJ_GAS_ACTIVE	2006	9G	-2347	6145013	2280371

Occidental of Elk Hills, Inc.

Oxy CO_2 Project

Injection Permit Request

October 14, 2009

Introduction

The Occidental of Elk Hills (OEHI) CO_2 enhanced oil recovery (EOR) and sequestration project (OXY CO_2 Project) intends to implement CO_2 EOR to increase oil and gas production and reserves from the Stevens reservoirs within the Elk Hills Unit. The OXY CO_2 Project will utilize CO_2 from the Hydrogen Energy California (HECA) project, which will be located near the unit. The HECA project will generate CO_2 from an Integrated Gasification Combined Cycle (IGCC) power plant. During normal operations, the HECA project is expected to deliver an annual average rate of 110 million standard cubic feet per day (MMSCF/d) of CO_2 (approximately 2.2 million tons per year) to Elk Hills, where it will be utilized in a miscible EOR recovery process.

The Stevens reservoirs are considered the best CO_2 EOR targets within Elk Hills Field. These reservoirs have been developed on 10 - 20 acre spacing and have produced over 500 million barrels of oil to date. Reservoir pressure in the Main Body B (MBB) sand (one of many sub-layers within the Stevens reservoir) is near the minimum miscibility pressure, indicating the MBB sandstone is an ideal initial candidate for miscible-CO_2 EOR. The MBB sand represents only a subset of target Stevens sand intervals suitable for CO_2 EOR. Some identified target intervals have undergone pressure depletion and will require re-pressurization to realize maximum oil recovery benefit from CO_2 injection.

The OXY CO_2 Project is anticipated to be a long-term project, continuing twenty years or more. With updated development plans and continued success, it is anticipated that the requested permit area will be expanded over time to accommodate twenty years of CO_2 delivery. The rate and location of project expansion will be dictated by development plans, reservoir performance, and project economics. This application will be supplemented by a complete CO_2 EOR and sequestration project description in approximately March 2010 ("OXY CO_2 Project Description Supplement"). As such, to accommodate the future expansion phases, the proposed Underground Injection Control (UIC) Class II project permit will be expanded over the life span of the project.

CO_2 injection in the targeted zones of the Stevens reservoirs has the potential to significantly increase oil reserves and extend the productive life of the Elk Hills Field. There is adequate capacity within the Stevens reservoirs to store the volume of CO_2 generated by the HECA Project. The operational injection volume and pressure will be reviewed as a part of OEHI's review process with California Division of Oil, Gas and Geothermal Resources (DOGGR). During all phase of this project OEHI will comply with existing and future UIC Class II regulations enforced by DOGGR.

In preparation for this project, OEHI has analyzed issues related to both EOR and long-term storage of CO_2. This additional study specifically examined the following topics:

- Reservoir (Site) Characterization
- Well and Facility Operations
- Monitoring, Measurement, and Verification (MMV)
- Closure

The above items, including an analysis of long-term storage capacity for the project, are further detailed in Appendix A.

A. Engineering Study

Technical data presented in this application are intended to represent, but are not limited to, the initial four-section project area. To accommodate the anticipated phases of this project, the proposed permit area will be expanded with the submission of additional UIC Class II expansion permit applications. Each subsequent application will focus on data specific to the subject expansion area.

A.1.1. Objectives:

The main objective of the OXY CO_2 Project is to economically maximize oil recovery within the requested permit area and to safely store CO_2 over the long term (sequester) in accordance with all county, state, and federal safety and environmental rules and regulations.

The OXY CO_2 Project follows a successful pilot project conducted in 2005 within the requested permit area. The 2005 Elk Hills CO_2 Pilot was originally designed as an observation pilot with injection taking place in well 355A-35S which was drilled ~135' away from well 355-35S. Well 355-35S served as a fluid sampling well during the pilot. Observation wells 355B-35S and 355C-35S were positioned ~110' away from well 355A-35S and completed with fiberglass casing across the Upper MBB (UMBB) to provide electric logging capabilities throughout the pilot project. During operation, offset wells were allowed to produce and clearly demonstrated recovery of oil that would not have been produced without such an EOR process. The four sections of the proposed EOR permit area encompass the previous pilot study area as illustrated in Figure 1. This submitted permit is intended to expand the area of CO_2 EOR permit 22800021 (Appendix B) approved in 2004. OEHI also currently operates a Stevens waterflood project that encompasses the proposed project area in accordance with DOGGR permit 22800006 additionally referenced in appendix B.

Figure 1

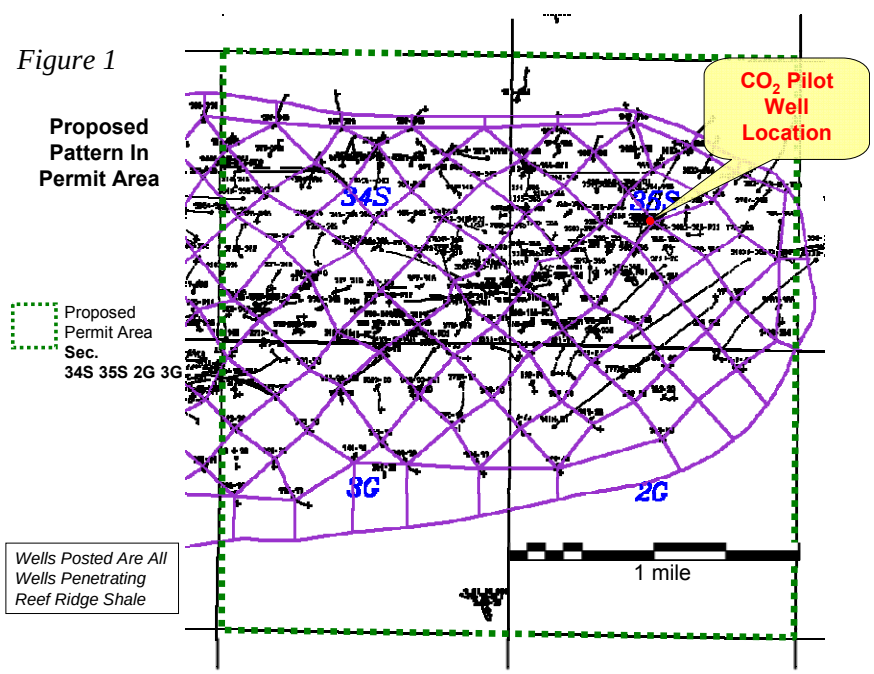

During planned EOR operations, CO_2 will be injected into the Stevens reservoirs at a pressure high enough to facilitate transfer of the CO_2 into the reservoir where it can contact the oil, but well below pressures that could cause injected CO_2 or formation fluids to escape the confining geologic zone. Due to the induced pressure gradient, the CO_2 will flow away from the injection well (see Figure 2). As it does, a portion of the CO_2 will contact and become miscible with the reservoir oil to form a new single-phase solution (i.e., the CO_2 and oil are miscible). The portion of CO_2 that combines with the oil is dependent upon characteristics of both the hydrocarbon reservoir (i.e. pressure and temperature) and the chemical composition of the reservoir fluids. The resulting miscible fluid has the favorable properties of lower viscosity, enhanced mobility, and lower interfacial tension as compared to the reservoir oil alone. In effect, this process mobilizes and recovers oil that would otherwise be trapped within the rock. Water injection may be used to control gas production and sweep the miscible CO_2-oil mixture to production wells.

Figure 2

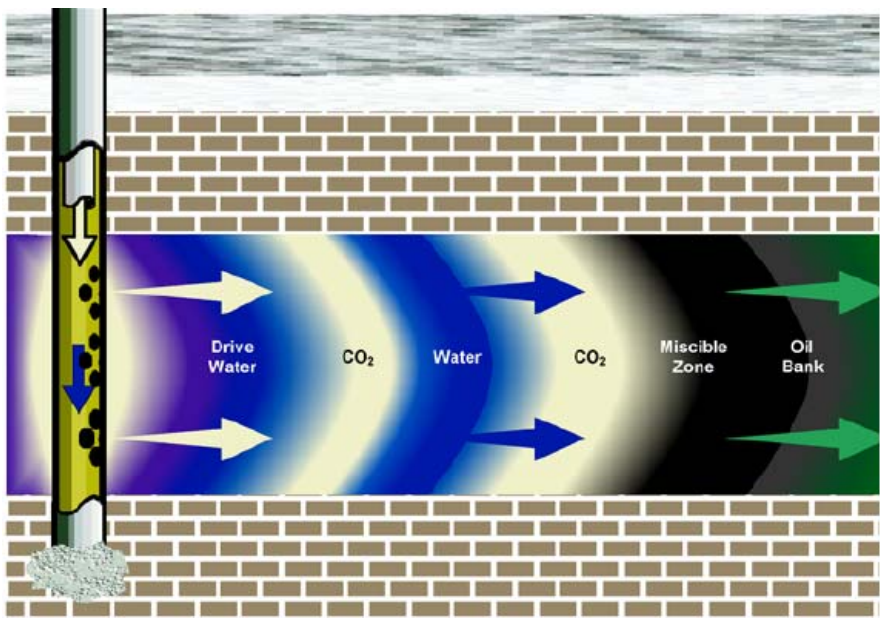

As part of the continuous EOR process, the CO_2 is separated from the produced hydrocarbons on the surface and recycled back to the reservoir within an enclosed system and not released to the atmosphere. The injected CO_2 is monitored closely through each stage of the process. The closed-loop system consists of surface and subsurface facilities for injection, production, processing, separation, compression and reinjection of CO_2 to improve oil recovery. During and following this process, the injected CO_2 becomes sequestered in the Stevens reservoir intervals. This process is referred to as "CO_2 EOR and sequestration."

A.1.2 CO_2 Program Location:

The initial location of the OXY CO_2 Project will be located in Section 34 and 35 of Township 30S Range 24E and Sections 2 and 3 of Township 31S Range 24E. All four sections are located within Elk Hills Unit boundaries as shown in Figure 3.

Figure 3. **Elk Hills Location Maps**

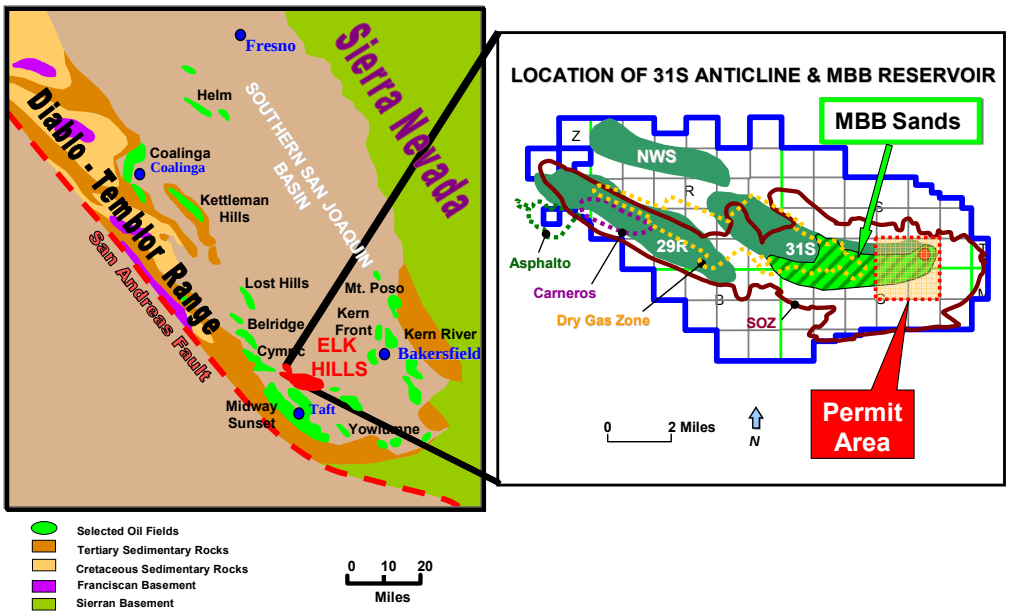

The OXY CO_2 Project will be conducted in the Stevens reservoir interval as shown in the stratigraphic section in Figure 4.

Figure 4. **Elk Hills Stratigraphic Section**

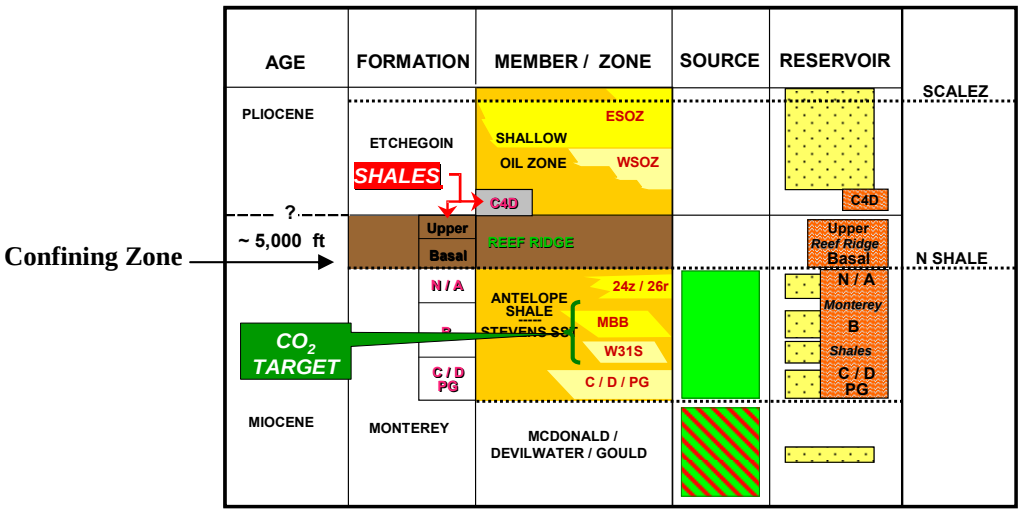

The OXY CO_2 Project will be initiated in the B-Sand, MBB, and W31S sub intervals of the Stevens 31S reservoir as displayed in Figure 5.

Figure 5. ***Type Logs of 31S Sand Reservoirs, B Interval***

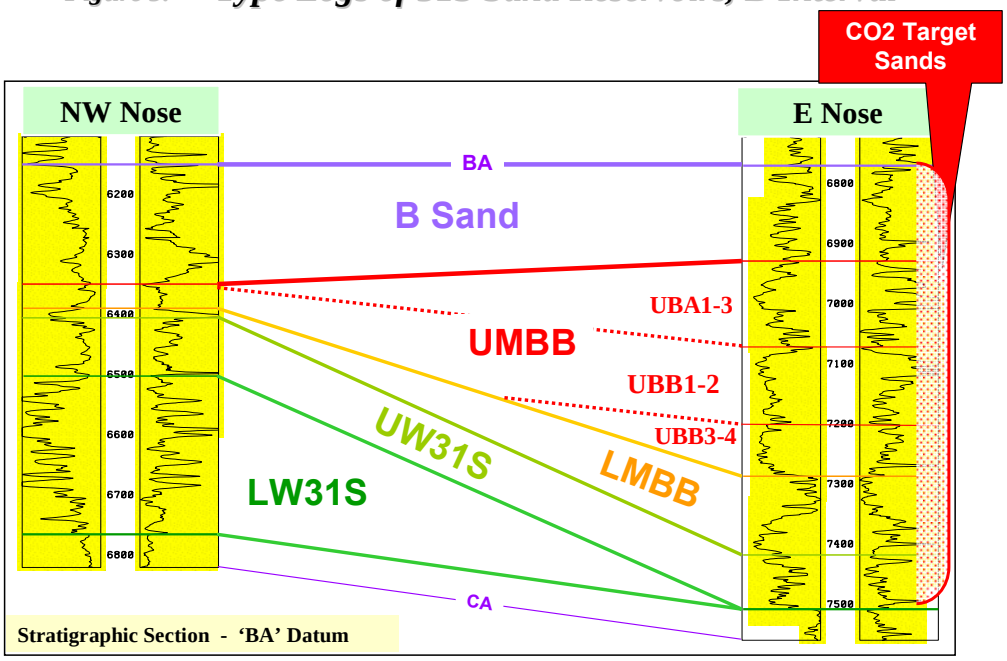

A.2. Average Reservoir Properties

The average reservoir properties of the above shown Stevens intervals are shown below:

Table 1

	Avg Gross Interval (Ft)	Avg. Porosity (%)	Avg. Perm (Ka md)	Original Avg. Temp (F)	Original Avg. Press (PSIG)	Current Avg. Temp (F)	Current Avg. Press (PSIG)
B-Sand	175	18	13	215	3200	215	2600
UBA1-3	140	16	46	215	3210	215	3200
UBB1	75	18	85	215	3210	215	3600
UBB2	46	17	50	215	3230	215	3600
UBB3	100	16	38	215	3240	215	3800
UBB4	38	16	41	215	3250	215	3900
LMBB	115	15	30	215	3280	215	3800
W31S	500	13	27	215	3400	215	3700

A.3. Reservoir Fluid Properties:

The average fluid properties contained in the above shown reservoir intervals are displayed in the following table:

Table 2

Oil Gravity (API)	Viscosity (cp)	Original Water Salinity (ppm TDS)	Current Water Salinity (ppm TDS)	Gas Gravity
36	0.4	30,000	23,000	0.82

Note: The original Stevens water salinity has been reduced by the injection of Tulare water (5,700 ppm Total Dissolved Solids) for waterflooding purposes.

A.4 Drilling and Abandonment

Figure 6 *(and Appendix C)* illustrates and outlines the proposed permit area and the status of all wells that penetrate the confining Reef Ridge shale interval.

Figure 6

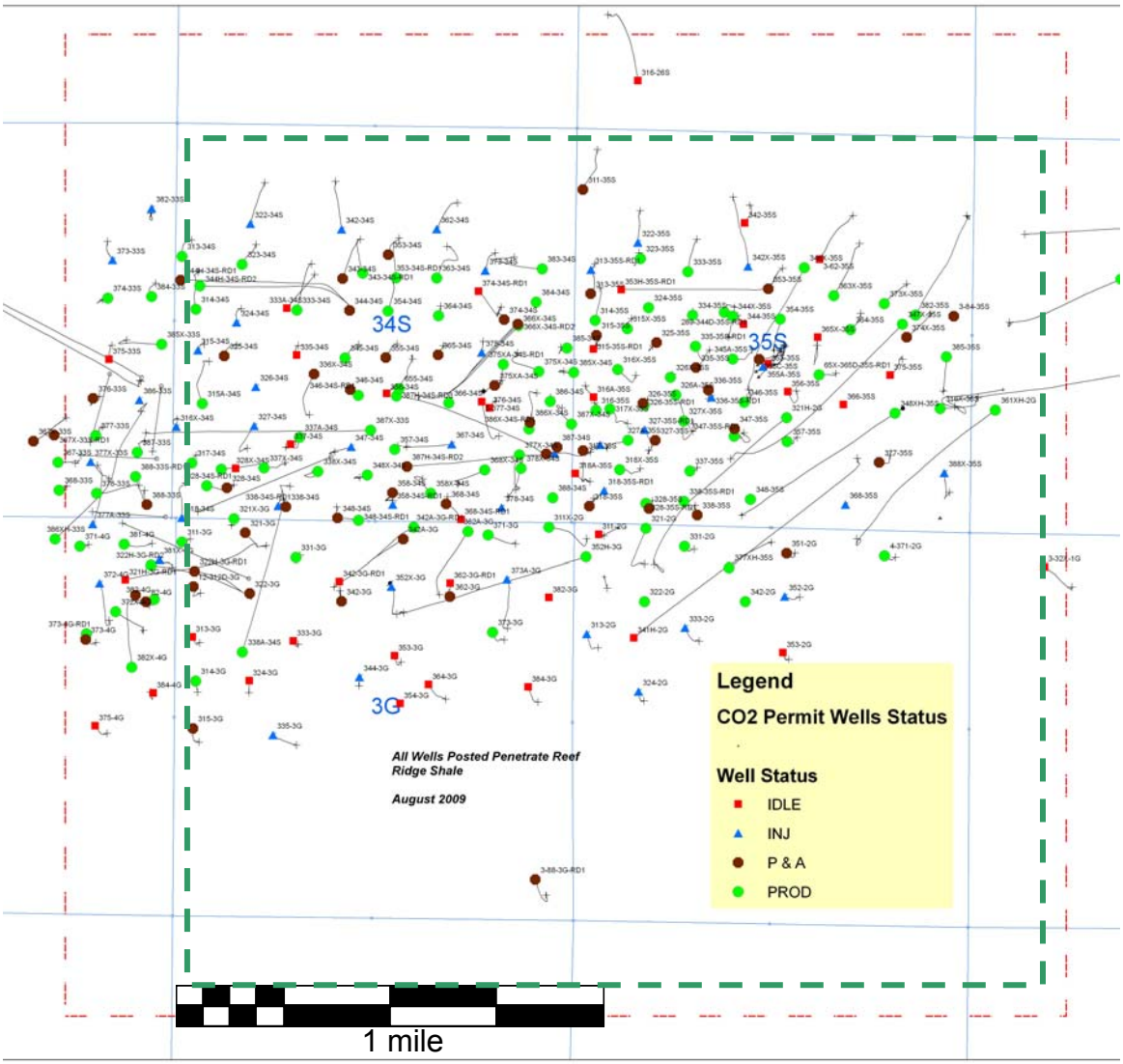

All producing wells and injection wells are monitored for pressure, produced fluid rates, and produced fluid composition.

A.5 Casing Diagrams:

Casing Diagrams for all producing, idle, and abandoned wells that penetrate the proposed injection zone are provided within Appendix D. These diagrams address items 5.a through 5.h as requested in the California Code Regulations 1724.7.

A.6 List of All Wells Not Penetrating the Injection Zone

Figure 7 is an illustration of wells within a ¼ mile radius of the proposed permit area that do not penetrate the Reef Ridge Shale. Appendix E includes a list of these wells with TD (TVDss) and well status.

Figure 7

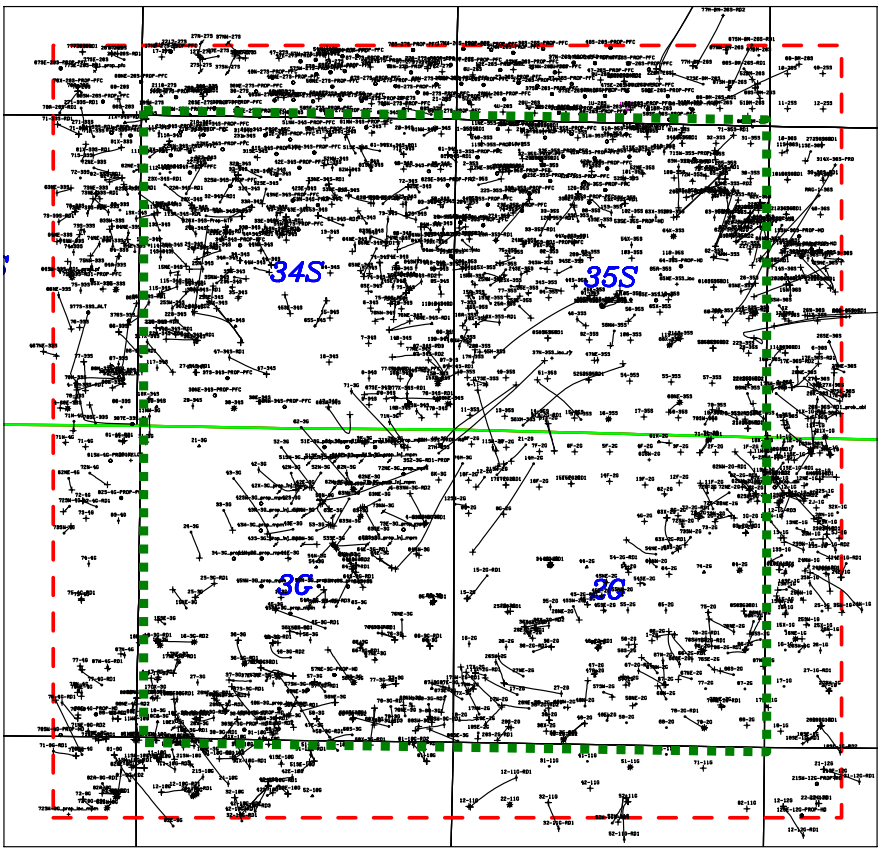

B. Geologic Study

B.1 Structural Contour Map

Figure 8 displays a TVDss structural contour map on the top of the Reef Ridge Shale, which is the Stevens cap rock (confining zone). Figure 9 displays a TVDss structural contour map of the B-Sand. Both maps display all wells which penetrate the Reef Ridge Shale. For each unit and sub-unit within the injection zone, a structural contour map is located in Appendix F.

Figure 8

Reef Ridge Shale

Structure Map
TVDss

Reef Ridge
TVDss

¼ Mile Radius
Perimeter From
Permit Area

Proposed
Permit Area
Sec.
34S 35S 2G 3G

Contour Interval
100ft.

Cap Rock

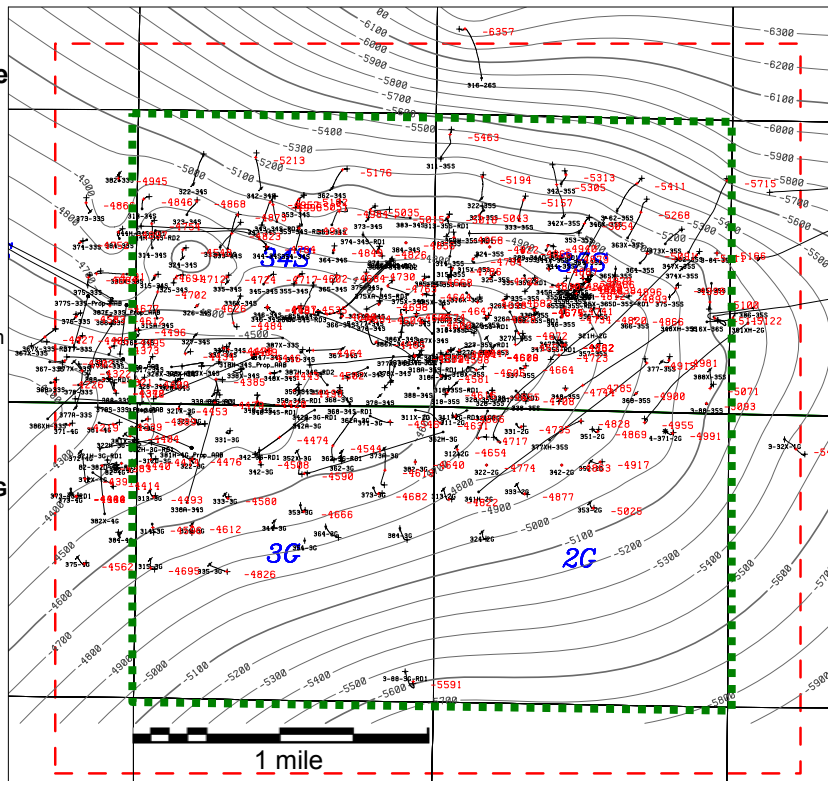

Figure 9

B Sand

Structure Map
TVDss

B Sand TVDss

¼ Mile Radius
Perimeter From
Permit Area

Proposed
Permit Area
Sec.
34S 35S 2G 3G

Contour Interval
100ft.

Top Of CO_2
Injection
Zone

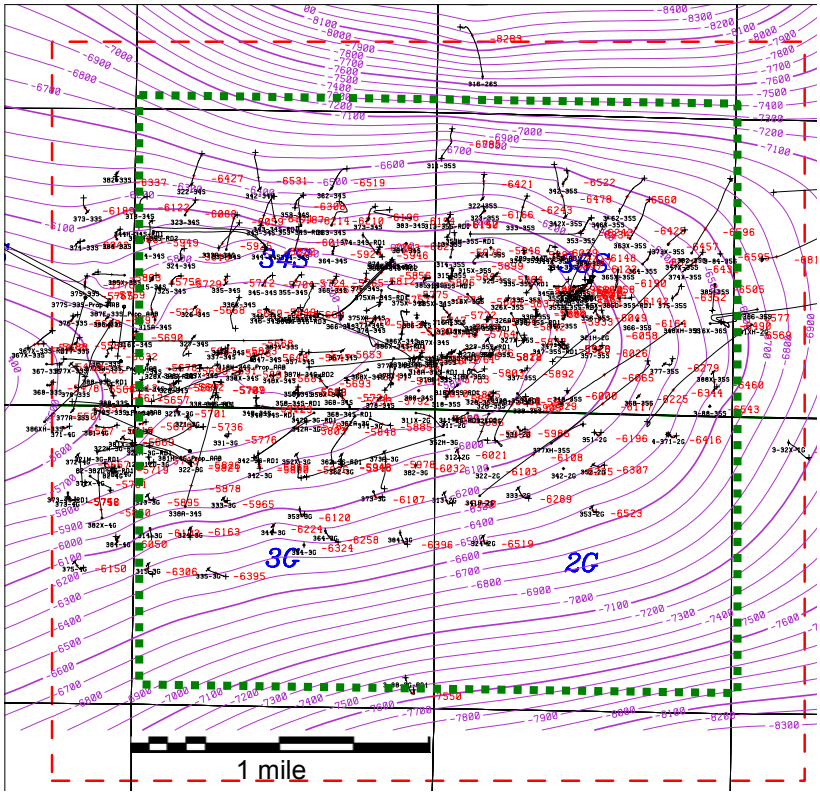

B.2. Isopachous Map

Figure 10 shows an isochore map illustrating the thickness of the cap rock above the injection zone. The contoured interval includes from the top of the Reef Ridge Shale to the top of the N Shale.

Figure 10

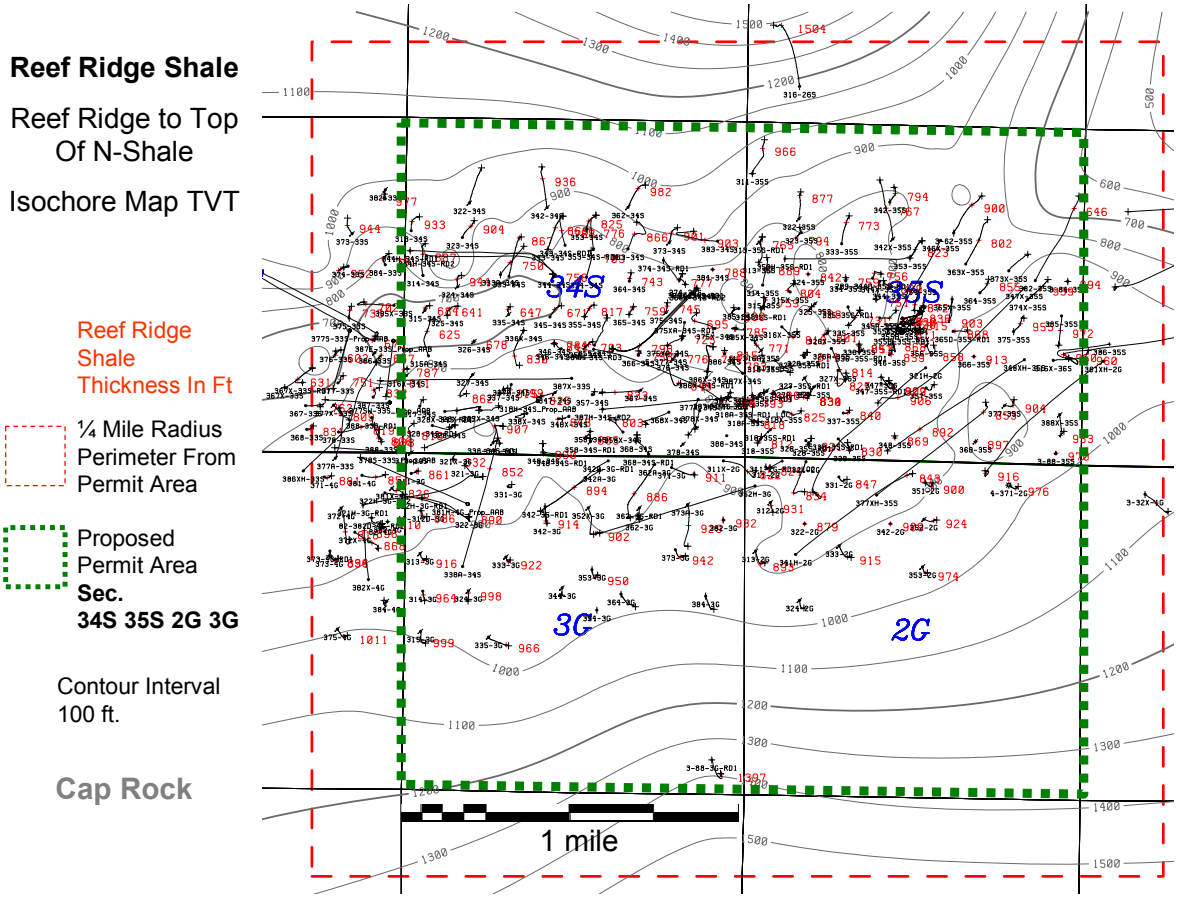

From the above figure, it can be observed that over the proposed permit area the cap rock ranges from 600 to 1,400 feet in thickness.

Figure 11 displays an isochore map of the target injection zone from the top of the B Sand to the base of the Lower Western sand (BLW).

Figure 11

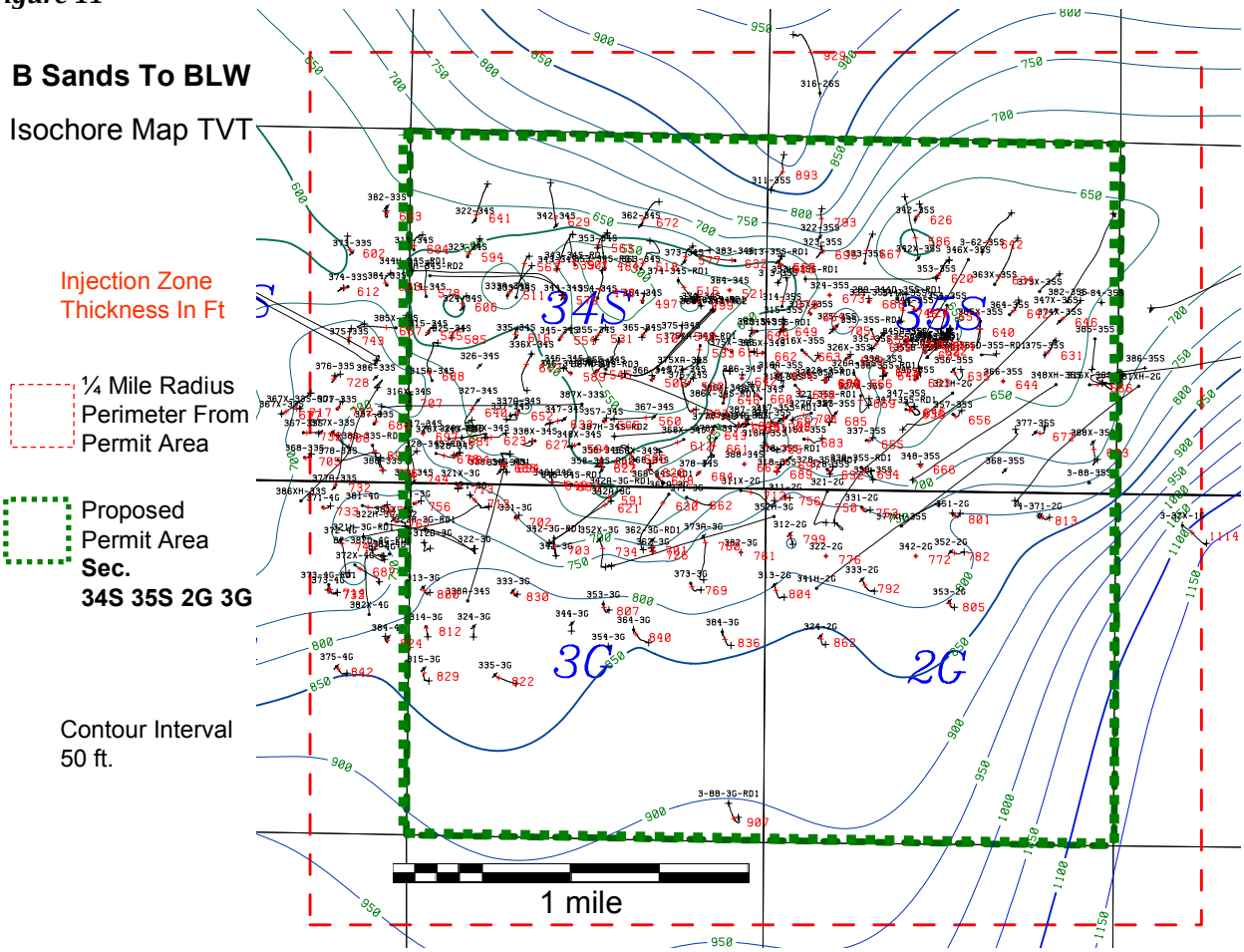

Additional isochore maps of all horizons within the zone of proposed injection are located in Appendix G on a larger scale.

B.3. Geologic Cross Section from Surface to Deepest Zone Penetrated

Figure 12 shows two lines of geologic cross section, which are subsequently shown in Figures 13 and 14. Figure 13 displays a section from the surface to deepest zone penetrated. Figure 14 expands the proposed CO_2 injection zone to highlight the correlation of type log well 355A-35S.

Large scale Northwest–Southeast and Southwest–Northeast cross sections through the proposed permit area are provided in Appendix H.

Figure 12

Structure at top of CO2 Pilot Interval (UBB1 surface)

Reference for Lines of Structure and Stratigraphic Sections

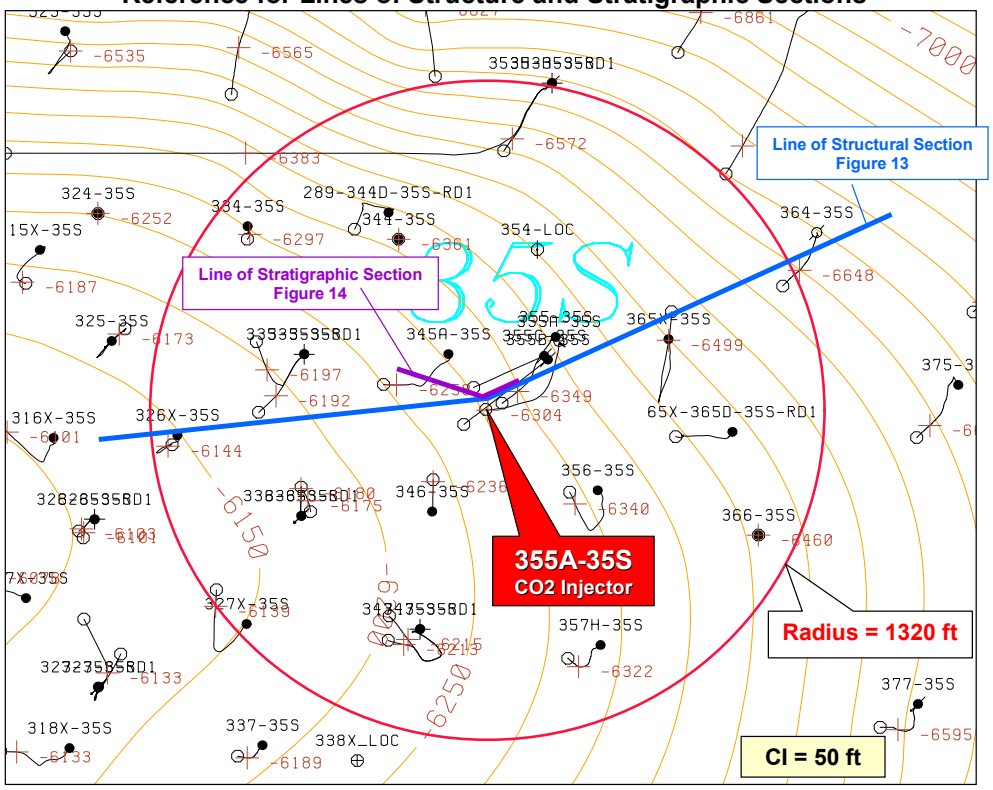

Figure 13. **Structural Dip Section with CO2 Injector; Surface to TD**

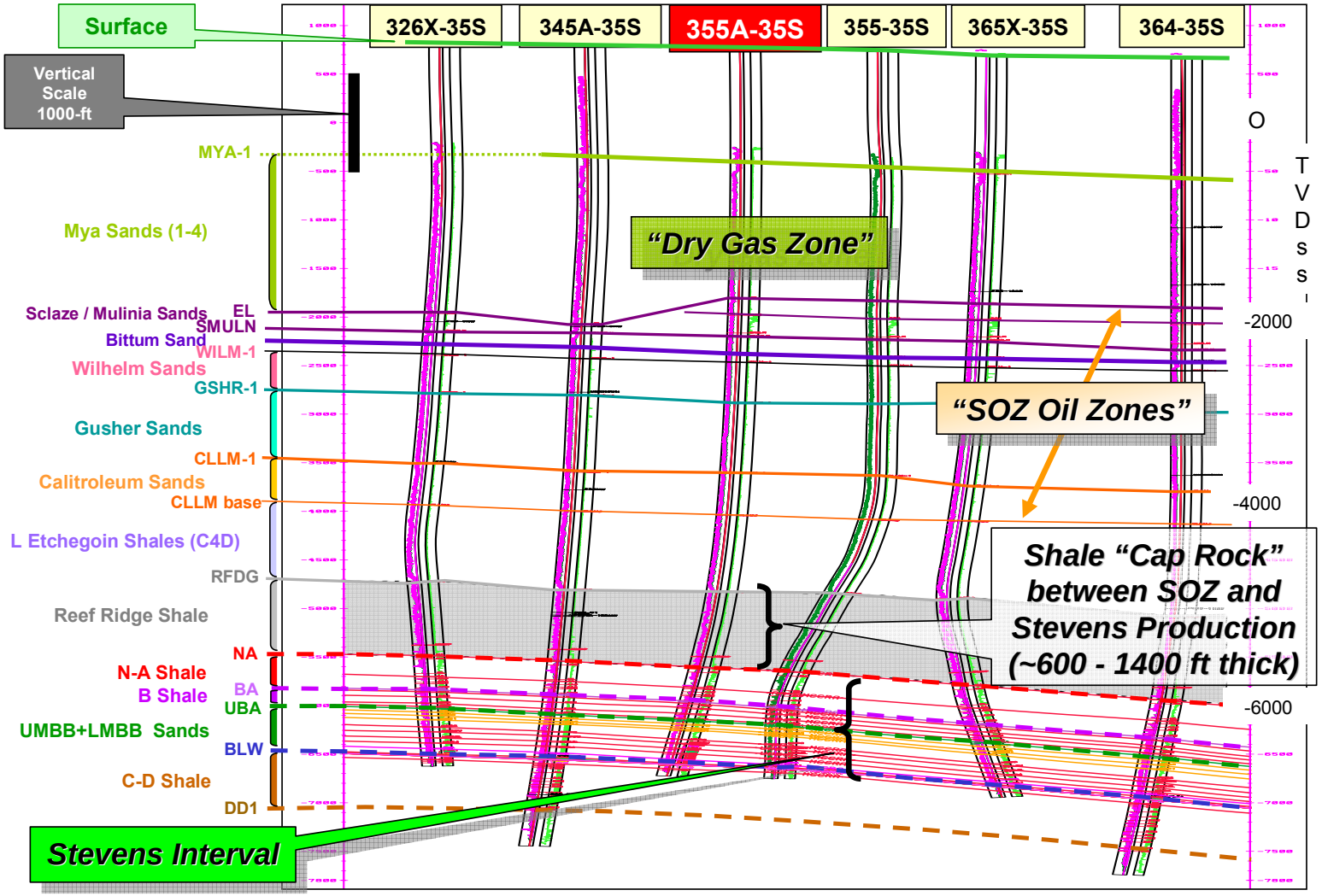

Figure 14. Stratigraphic Section through CO2 Injector, 355A-35S

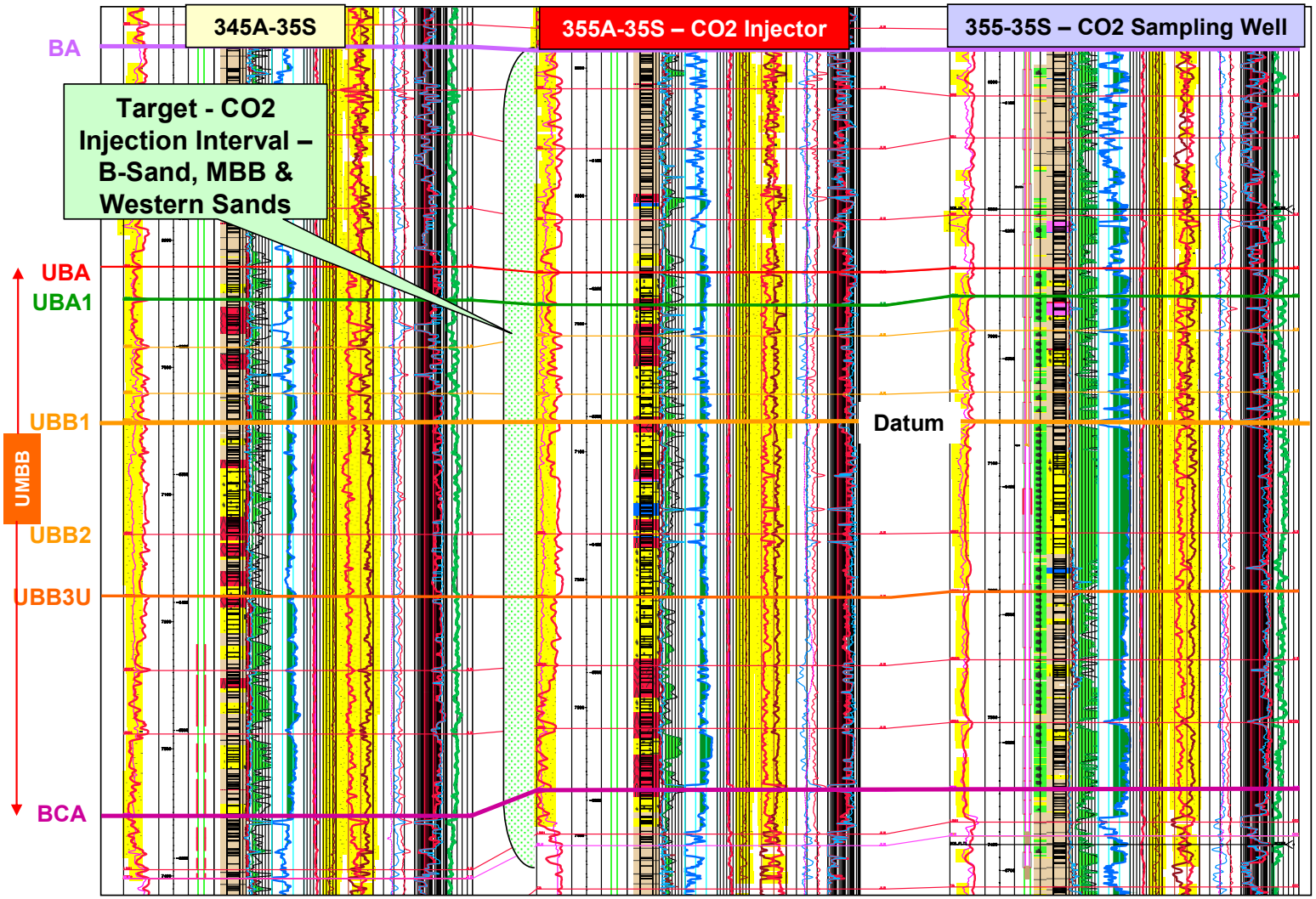

B.4. Injection Well Electric Log

An electric log from pilot CO_2 injector 355A-35S with tops for all geologic units has been provided as a representative type log and is included in Appendix I.

B.5. Cap Rock Characteristics

Figure 13, previously shown, establishes the Reef Ridge shale as the cap rock for the Stevens reservoirs. The Reef Ridge is continuous across the 31S, 29R, and Northwest Stevens structures as illustrated by the isopach map shown in Figure 15. Continuity of the cap rock can be further observed by the cross section shown in Figure 16.

Figure 15

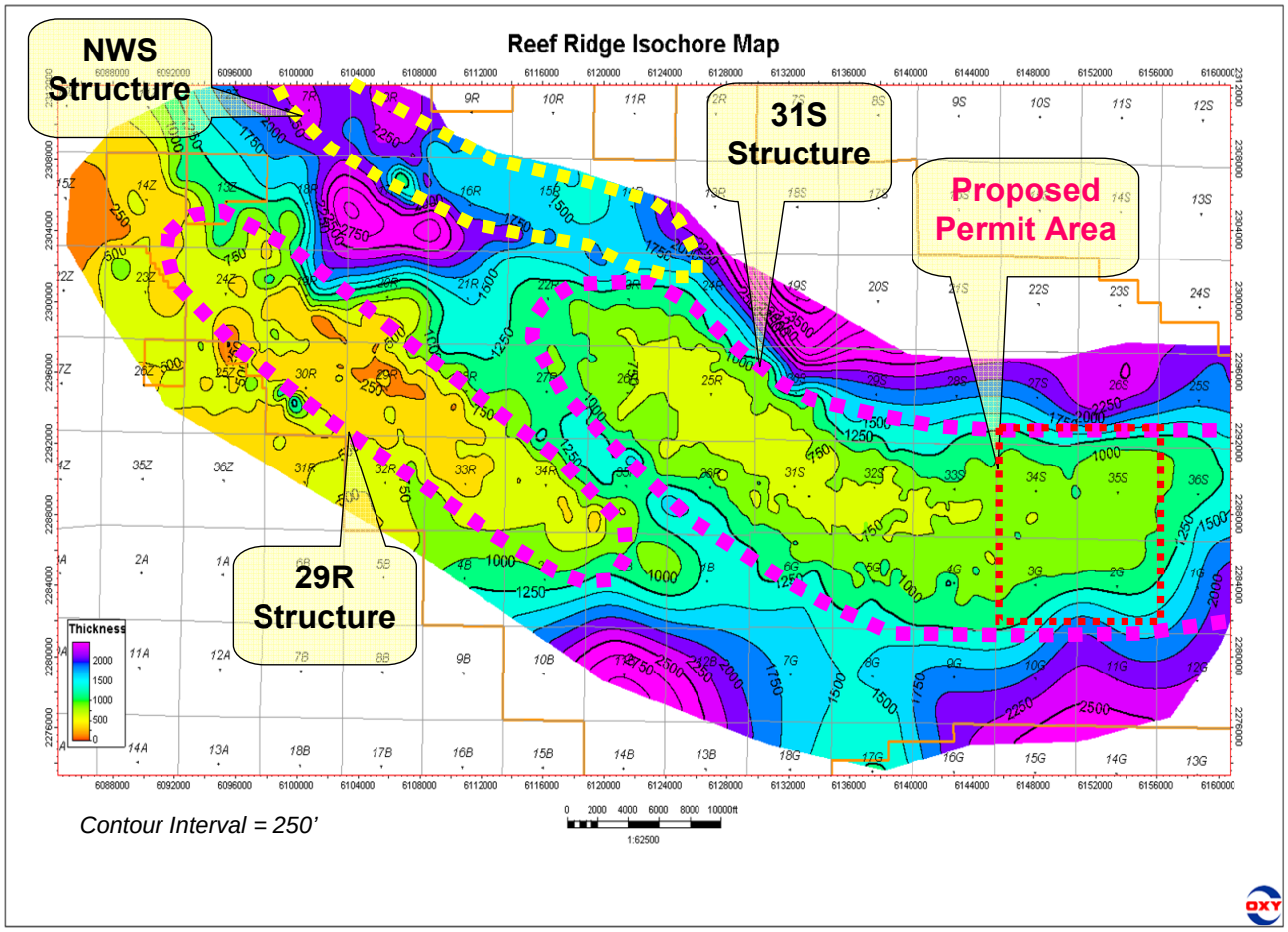

Figure 16. ***Shale Correlation Section***

Continuity from 29R to 31S Anticlinal Structures

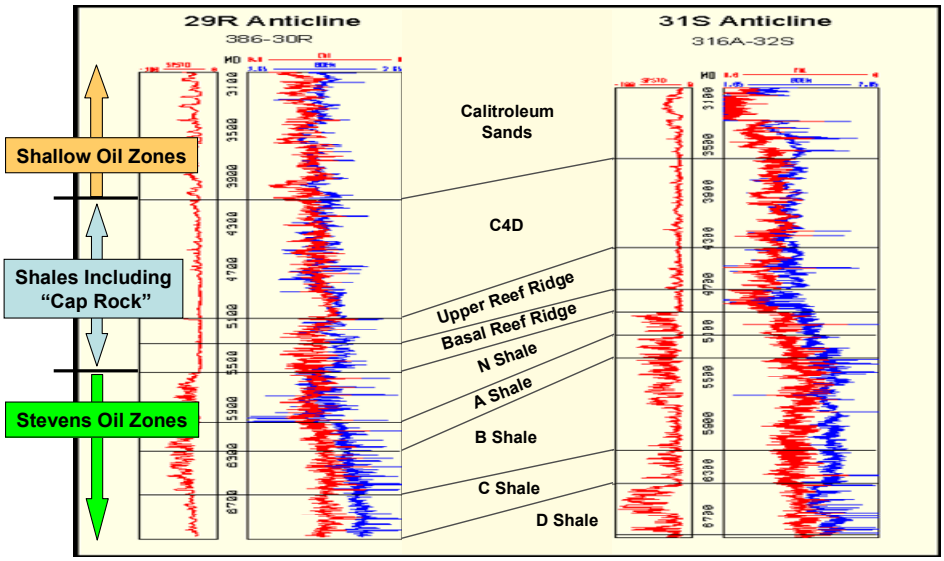

Substantial and significant evidence exists that demonstrates the sealing characteristics of the Reef Ridge shale interval, including:

- Successful execution of CO_2 injection pilot program
- Physical rock characteristics of the Reef Ridge shale interval
- Fluid contacts and reservoir pressure differences
- Core analysis of the Reef Ridge shale interval
- Seismic control
- Geochemical analysis

<u>CO_2 Injection Pilot</u>

During 2005, OEHI conducted a 4-month CO_2 injection pilot in the Stevens reservoirs within the proposed permit area. Critical information was gained during this pilot program, including confirmation of CO_2 containment within the Stevens reservoir rock beneath the Reef Ridge shale interval.

<u>Physical Characteristics</u>

The following table displays the average Reef Ridge shale properties.

Table 3

Reef Ridge Shale Properties	
Deposition Environment	Deep Marine
Geologic Period	Miocene
Average Depth	4800 ft MD
Formation Temp (degrees F)	185
Rock Properties	
Average porosity %	30
Average permeabilty (MD)	<.01
KV/KH	0.001 est.

Fluid Contacts and Reservoir Pressure (Depletion)

Fluid contacts provide evidence of vertical compartmentalization between the Stevens reservoirs and over laying Eastern Shallow Oil Zone (ESOZ) reservoirs. The original oil water contacts for the two reservoirs varied by over 3000 ft subsea true vertical depth. In addition, development histories of each reservoir, including but not limited to gas blowdown and water injection schemes have been implemented without influencing pressure or production performance across the Reef Ridge cap rock. The following table shows average reservoir pressures for ESOZ reservoir intervals, which overlie the proposed permit area above the Reef Ridge shale.

Table 4

2006 Reservoir Pressure Data

SOZ Reservoir			*pressure gradient*
35N-34S	**TVD**	**Pres (psia)**	**psi / TVD**
MYA4	2710	711	0.26
SS1	2985	83	0.03
SS2	3075	148	0.05
Mulina	3155	113	0.04

Wells Separated Vertically By Reef Ridge Shale

Stevens Reservoir			*pressure gradient*
337A-34S	**TVD**	**Pres (psia)**	**psi / TVD**
N-Shale	6360	2,905	0.46
A-Shale	6690	2,882	0.43
B-Shale	6715	3,654	0.54
UBA	6855	3,760	0.55
UBB1	7045	3,842	0.55
UBB3U	7125	3,877	0.54

Distance Between 35N-34S & 337A-34S ~ 1,400 ft laterally

Core Analysis

As demonstrated above, the Reef Ridge shale is a laterally continuous member across the Elk Hills Unit. Core data from 348AH-31S was collected in two 30 foot intervals through the 870 feet thick Reef Ridge shale. The core analysis is presented in Figures 17 – 19. Figure 17 displays results from a mineralogy analysis within this zone. As shown in Figure 17, in both the upper and lower portion of the core analysis, the most predominant secondary mineral is clay, which inhibits fracturing of the porcelaneous materials. The data in these figures support the sealing capacity of the Reef Ridge shale.

Figure 17

Oxy of Elk Hills
348AH-31S

File N

PETROLE

FTIR Mineralogy
(Weight Percent)

	Top Depth - Btm Depth	Density (g/cc)	Quartz	Albite	Oligoclase	Andesine	K-Feldspar	Calcite	Dolomite	Pyrite	Opal-A	Opal-CT	Chert	Cristobalite	Total Clay	Kaolinite	Chlorite
Core #1	4503.0 - 4504.1	2.47	0	7	0	5	11	0	1	1	0	43	10	0	22	8	0
	4504.1 - 4505.1	2.38	0	8	0	3	9	0	0	0	0	68	0	0	12	5	0
	4505.1 - 4506.0	2.78	0	0	0	0	0	10	69	0	0	0	14	0	7	0	0
	4506.0 - 4508.0	2.42	0	7	0	3	13	0	0	2	0	43	0	18	14	7	0
	4508.0 - 4509.3	2.46	0	8	0	6	12	2	0	2	0	44	8	0	18	6	0
	4509.3 - 4510.0	2.49	0	7	0	3	9	0	11	2	0	46	8	0	14	6	0
	4510.0 - 4511.0	2.43	0	8	0	3	11	0	1	2	0	44	0	15	16	6	0
	4511.0 - 4512.2	2.42	0	6	0	3	13	0	0	2	0	43	0	15	18	6	0
	4512.2 - 4513.3	2.39	0	8	0	4	10	0	0	0	0	63	0	0	15	3	0
	4513.3 - 4514.0	2.41	4	0	0	0	17	0	0	0	0	51	0	0	28	0	0
	4514.0 - 5414.5	2.44	0	6	0	4	11	0	0	2	0	43	0	13	21	6	0
	5414.5 - 4516.5	2.40	0	0	0	6	12	0	0	0	0	48	0	15	19	4	0
	4516.5 - 4518.0	2.44	0	6	0	2	12	0	0	2	0	39	0	16	23	8	3
	4518.0 - 4519.5	2.45	0	0	0	8	14	0	0	0	0	42	9	0	27	5	0
	4519.5 - 4520.0	2.45	0	7	0	11	12	2	0	1	0	50	0	0	17	5	0
	4520.0 - 4521.0	2.44	0	8	0	0	13	1	0	2	0	43	0	17	16	7	4
	4521.0 - 4522.0	2.47	0	10	0	7	12	0	0	2	0	46	10	0	13	5	0
	4522.0 - 4522.7	2.49	0	8	0	7	10	2	0	2	0	39	10	0	22	7	0
	4522.7 - 4523.5	2.43	0	6	0	9	10	0	0	1	0	55	0	0	19	6	0
Core #2	5017.0 - 5018.0	2.55	4	0	0	6	10	0	0	2	0	17	37	0	24	7	0
	5018.0 - 5018.5	2.55	0	0	0	4	10	0	0	2	0	0	42	22	20	6	0
	5018.5 - 5019.0	2.52	0	0	0	3	10	2	0	1	0	12	38	14	20	5	0
	5019.0 - 5019.5	2.52	0	0	0	3	9	2	0	1	0	13	38	13	21	5	0
	5019.5 - 5019.7	2.61	0	0	0	6	9	3	0	2	0	0	48	0	32	7	0
	5019.7 - 5020.2	2.58	5	0	0	2	10	0	2	1	0	19	40	0	21	5	0
	5020.2 - 5020.8	2.62	7	0	0	4	10	2	0	2	0	0	49	0	26	6	0
	5020.8 - 5021.9	2.62	3	0	0	3	9	0	2	2	0	0	55	0	26	5	0

Figure 18 displays a core analysis of this same zone. Although porosity values, shaded green, are relatively high, this is non-effective porosity and has little impact on the permeability of porcelaneous shale or chert. Low permeability is verified by the absence of oil saturation, shaded yellow. This data indicates that as zones below the Reef Ridge were being "charged" with hydrocarbons, the permeability of the Reef Ridge was sufficiently low to prevent hydrocarbon migration.

Figure 18

OXY of Elk Hills, Inc.
348AH-31S
Elk Hills Field

CL File No. : 571

	Sample No.	Depth ft	Porosity (BV-GV) %	Saturation Oil %	Saturation Water %	O/W Ratio	Total Liquid %	Grain Den g/cc	Description
Core #1	111	4516.5	27.4	0.0	96.8	0.0	96.8	2.46	Shale dk gry slty no stn no flu
	112	4518.0	25.3	0.0	99.0	0.0	99.0	2.54	Shale dk gry slty no stn no flu
	113	4519.5	23.1	0.0	94.2	0.0	94.2	2.56	Shale dk gry slty no stn no flu
	114	4520.0	27.7	0.0	96.2	0.0	96.2	2.46	Shale dk gry slty no stn no flu
	115	4521.0	29.1	0.0	97.0	0.0	97.0	2.42	Shale dk gry slty no stn no flu
	116	4522.0	28.8	0.0	95.2	0.0	95.2	2.52	Shale dk gry slty no stn no flu
	117	4522.7	28.1	0.0	87.1	0.0	87.1	2.50	Shale dk gry slty no stn no flu
Core #2	118	5017.0	27.8	1.2	93.7	0.0	95.0	2.60	Shale lt brn slty m stn vdull or flu-no vis
	119	5018.0	39.4	0.0	96.0	0.0	96.0	2.60	Shale dk gry slty no stn no vis flu
	120	5018.5	40.7	0.0	97.9	0.0	97.9	2.59	Shale dk gry slty no stn no vis flu
	121	5019.0	38.8	0.0	96.7	0.0	96.7	2.60	Shale dk gry slty no stn no vis flu
	122	5019.5	32.9	0.0	96.0	0.0	96.0	2.63	Shale dk gry slty no stn no vis flu
	123	5019.7	31.2	0.0	96.2	0.0	96.2	2.59	Shale dk gry slty no stn no vis flu
	124	5020.2	32.2	0.0	99.1	0.0	99.1	2.59	Shale dk gry slty no stn no vis flu
	125	5020.8	38.9	0.0	95.4	0.0	95.4	2.58	Shale dk gry slty no stn no vis flu
	126	5021.9	24.1	0.0	97.5	0.0	97.5	2.59	Shale dk gry slty no stn no vis flu
	127	5022.5	34.6	0.0	97.2	0.0	97.2	2.56	Shale dk gry slty no stn no vis flu
	128	5023.0	41.1	0.0	96.6	0.0	96.6	2.57	Shale dk gry slty no stn no vis flu
	129	5023.8	25.0	0.0	95.1	0.0	95.1	2.61	Shale dk gry slty no stn no vis flu
	130	5024.2	31.9	0.0	94.6	0.0	94.6	2.61	Shale dk gry slty no stn no vis flu
	131	5024.7	24.5	0.0	94.5	0.0	94.5	2.59	Shale dk gry slty no stn no vis flu
	132	5025.0	36.5	0.0	95.1	0.0	95.1	2.61	Shale dk gry slty no stn no vis flu
	133	5025.6	31.4	0.0	94.3	0.0	94.3	2.62	Shale dk gry slty no stn no vis flu
	134	5026.8	36.7	0.0	97.5	0.0	97.5	2.59	Shale dk gry slty no stn no vis flu
	135	5027.6	25.1	0.0	87.0	0.0	87.0	2.62	Shale dk gry slty no stn no vis flu
	136	5028.0	28.5	0.0	97.0	0.0	97.0	2.62	Shale dk gry slty no stn no vis flu
	137	5029.5	31.0	0.0	77.3	0.0	77.3	2.62	Shale dk gry slty no stn no vis flu
	138	5029.7	30.4	0.0	97.1	0.0	97.1	2.61	Shale dk gry slty no stn no vis flu

Figure 19

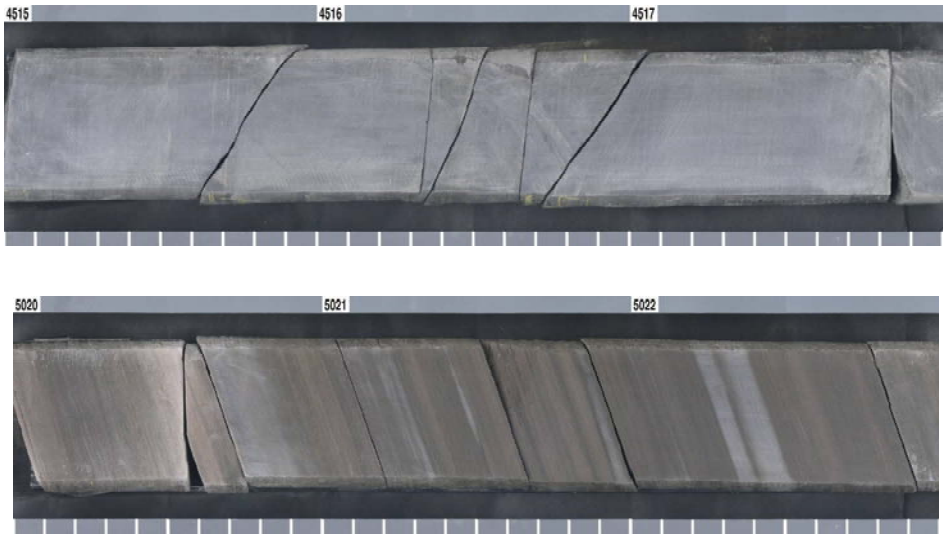

Reef Ridge Shale Core – 348AH-31S

** Fractures Seen In Core Photos Are Drilling Induced*

Seismic Control

Further evidence of the sealing characteristics of the Reef Ridge shale can be observed in the following seismic section. The diagram illustrates that faults above and below the Reef Ridge shale terminate before penetrating the Stevens cap rock interval.

Figure 20

31S Seismic Section

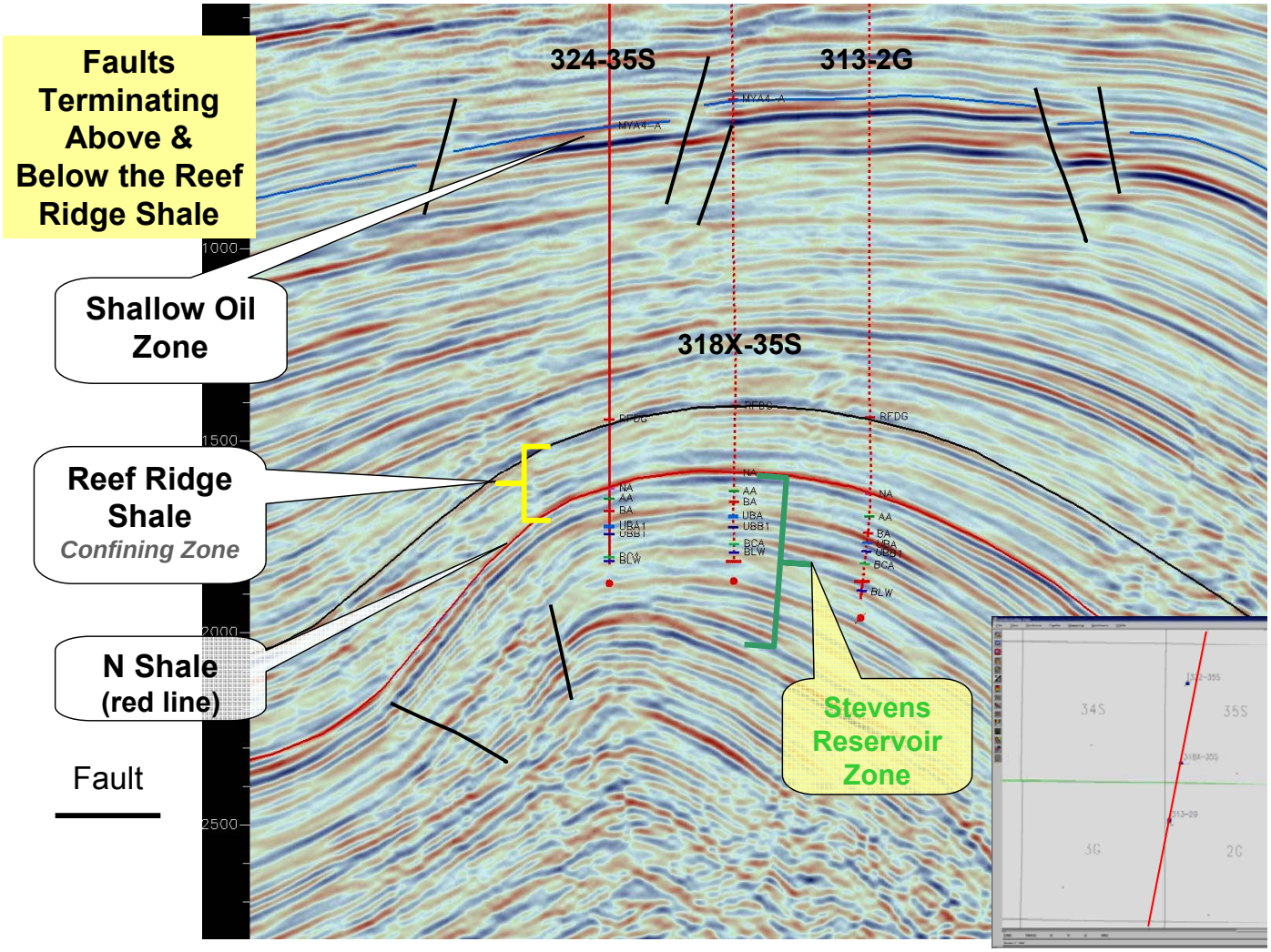

Figure 21

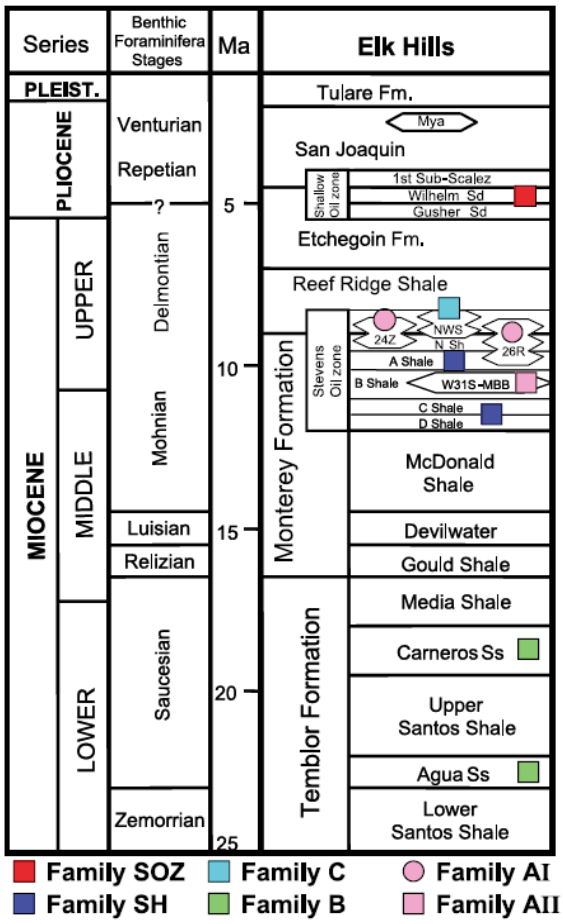

Geochemical Analysis Control

Geochemical analysis further supports vertical isolation between the Stevens and SOZ reservoirs. Zumberge, Russell and Reid documented (Appendix J) geochemical data along with their analysis of 66 oil samples from the Elk Hills field. Cluster analysis revealed five distinct oil families sourced from the Miocene Monterey Formation and tied to stratigraphic intervals (see Figure 21, from Zumberge et al). The distinct geochemical compositions of the Stevens and SOZ oils among the other oil "families" identified suggests "minimal upsection, cross stratigraphic migration" (Appendix J, pg. 1370). The authors conclude by stating that hydrocarbon migration into the SOZ reservoirs is not the result of leakage from the older, Miocene reservoirs.

C. Injection Plan

C.1 Maximum Anticipated Number of Injection Wells for the Project:

Initial project plans call for an anticipated maximum of 80 injection wells in the requested permit area. Each injection well will function as a central injection point surrounded by or between three to five offsetting production wells thereby limiting the migration of injected fluids outside of each injection pattern.

C.2 Maximum Anticipated Daily Injection Volume for the Project:

The maximum anticipated injection rate into the requested permit area (including CO_2 recycle) is 400 MMSCF of CO2 per day and 250,000 barrels of water per day.

C.3 Maximum Anticipated Surface Injection Pressure and Rate by Well:

It is anticipated that maximum surface injection pressure will be 3,500 psi and will not exceed the existing waterflood permit gradient of 0.8 psi per foot of depth. The maximum injection rate at any injection well is anticipated to be 20 MMSCF of CO_2 per day and 10,000 barrels of water per day.

C.4 CO_2 Injection Facilities

Injection Facilities Locator Map

The finalized placement of the CO2 pipeline route from the generation facility (HECA plant) has not yet been confirmed, however Figure 23 illustrates likely potential pipeline routes from the approximate location of the CO_2 generation facility to the proposed permit area.

Figure 23

Surface Facilities Location Map

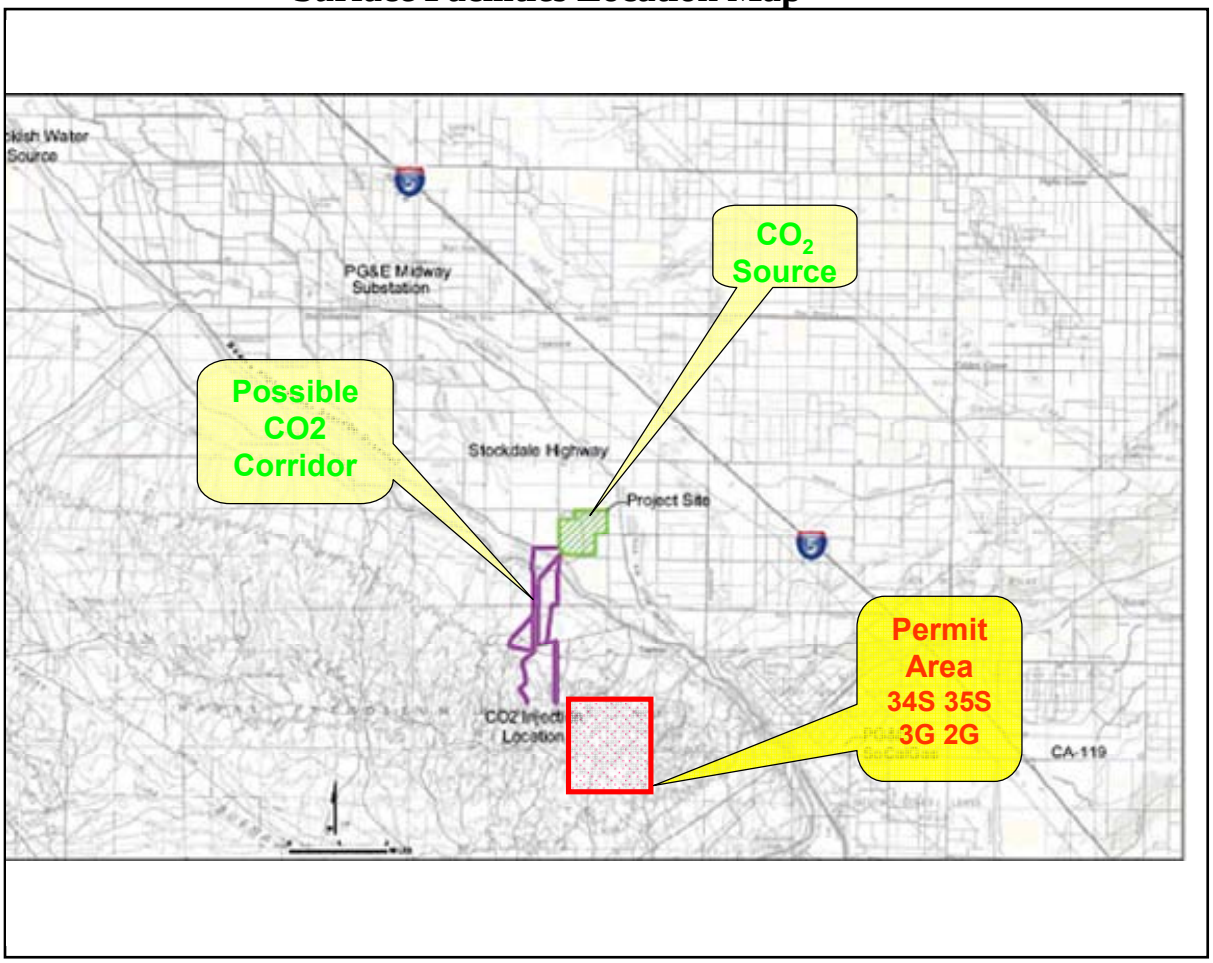

C.5, 7, 8, 9 Monitoring Systems to Ensure Safety:

Please see Appendix A for a description of the various components that comprise OEHI's strategy to ensure safe and secure implementation and operation of the Oxy CO2 Project at Elk Hills Field.

C.6 Proposed Method of Injection:

Delivery into each injector will be through tubing using multiple packers, injection control valves, and other means of injection profile modifications as deemed necessary. Significant upgrades will be made to existing surface facilities to ensure adequate capacity for the collection, processing, and distribution of produced injectants (water and/or CO_2).

D. Notice to Offset Operators

There are no Offset Operators; consequently, there has been no correspondence.

E. Other Data Requested

Appendix A: Elk Hills Stevens CO_2 Class II UIC Permit Supplement

Appendix B: DOGGR Dual Steamflood / Waterflood Project Stevens Zone Permit #22800006 and DOGGR Dual Waterflood / CO_2 Project Permit # 22800021

Appendix C: Completion and status map of all wells that have penetrated the Reef Ridge Shale indicating active or inactive producers and injectors, and abandoned wellbores.

Appendix D: Wellbore and casing diagrams within a ¼ mile radius of proposed project boundaries of all wells penetrating the Reef Ridge Shale (Cap Rock).

Appendix E: List of wells within a ¼ mile radius of the proposed permit area that do not penetrate the Reef Ridge Shale. Included are API#, year of completion, status, and TD (TVDss).

Appendix F: Structural contour maps for each unit and sub-unit from the Reef Ridge Shale (cap rock) to the BLW (base of the injection zone).

Appendix G: Isochore maps for the reef ridge (cap rock) and all major zones of injection through the BLW (base of the injection zone).

Appendix H: Northwest – Southeast cross section and a Northeast – Southwest cross section through the proposed permit area

Appendix I: A 2-inch type log of 355A-35S with interpreted geologic markers listed.

Appendix J: AAPG Bulletin: *Charging of Elk Hills reservoirs as determined by oil geochemisty*

Occidental of Elk Hills, Inc.
10800 Stockdale Hwy
Bakesfield, CA 93311

Transmittal

October 14, 2009

Attn: Randy Adams, Burt Ellison
Division Of Oil And Gas & Geothermal Resources
4800 Stockdale Hwy. Suite 417
Bakesfield, CA 93309

This is a copy the transmittal provided to DOGGR.
Below are the versions of documents enclosed on archive CD

Copies	Description		
1	Bound Oxy CO2 Project Injection Permit Request		14-Oct
1	Binder Appendix A through E		
	Appendix A	Elk Hills Stevens CO2 Class II UIC Permit Supplement	09-Oct
	Appendix B	DOGGR Dual Steamflood / Waterflood Project Stevens Zone Permit #22800006 DOGGR Dual Waterflood / CO2 Project Stevens Zone Permit #22800021	
	Appendix C	Completion and status map of all wells that have penetrated the Reef Ridge Shale indicating active or inactive producers and injectors, and abandoned wellbores.	02-Sep
	Appendix D	Wellbore and casing diagrams within a ¼ mile radius of proposed project boundaries of all wells penetrating the Reef Ridge Shale (Cap Rock).	14-Oct
	Appendix E	List of wells within a ¼ mile radius of the proposed permit area that do not penetrate the Reef Ridge Shale. Included are API#, year of completion, status, and TD (TVDss).	21-Jul
1	Binder Appendix F through J		
	Appendix F	Structural contour maps for each unit and sub-unit from the Reef Ridge Shale (cap rock) to the BLW (base of the injection zone).	14-Oct
	Appendix G	Isochore maps for the reef ridge (cap rock) and all major zones of injection through the BLW (base of the injection zone).	14-Oct
	Appendix H	Northwest - Southeast cross section and a Northeast - Southwest cross section through the proposed permit area	14-Oct
	Appendix I	A 2-inch type log of 355A-35S with interpreted geologic markers listed.	
	Appendix J	AAPG Bulletin: Charging of Elk Hills reservoirs as determined by oil geochemisty	

Oxy CO_2 Project

Injection Permit Request

October 2009

Appendix F, G, H, I, J

Structural Contour Maps (F)
&
Isochore Maps (G)
For
Cap Rock And Zones Of Injection

Cross Sections Across Proposed Permit Area (H)

Type Log 355A-35S (I)

AAPG Bulletin: *Charging of Elk Hills reservoirs as determined by oil geochemisty* (J)

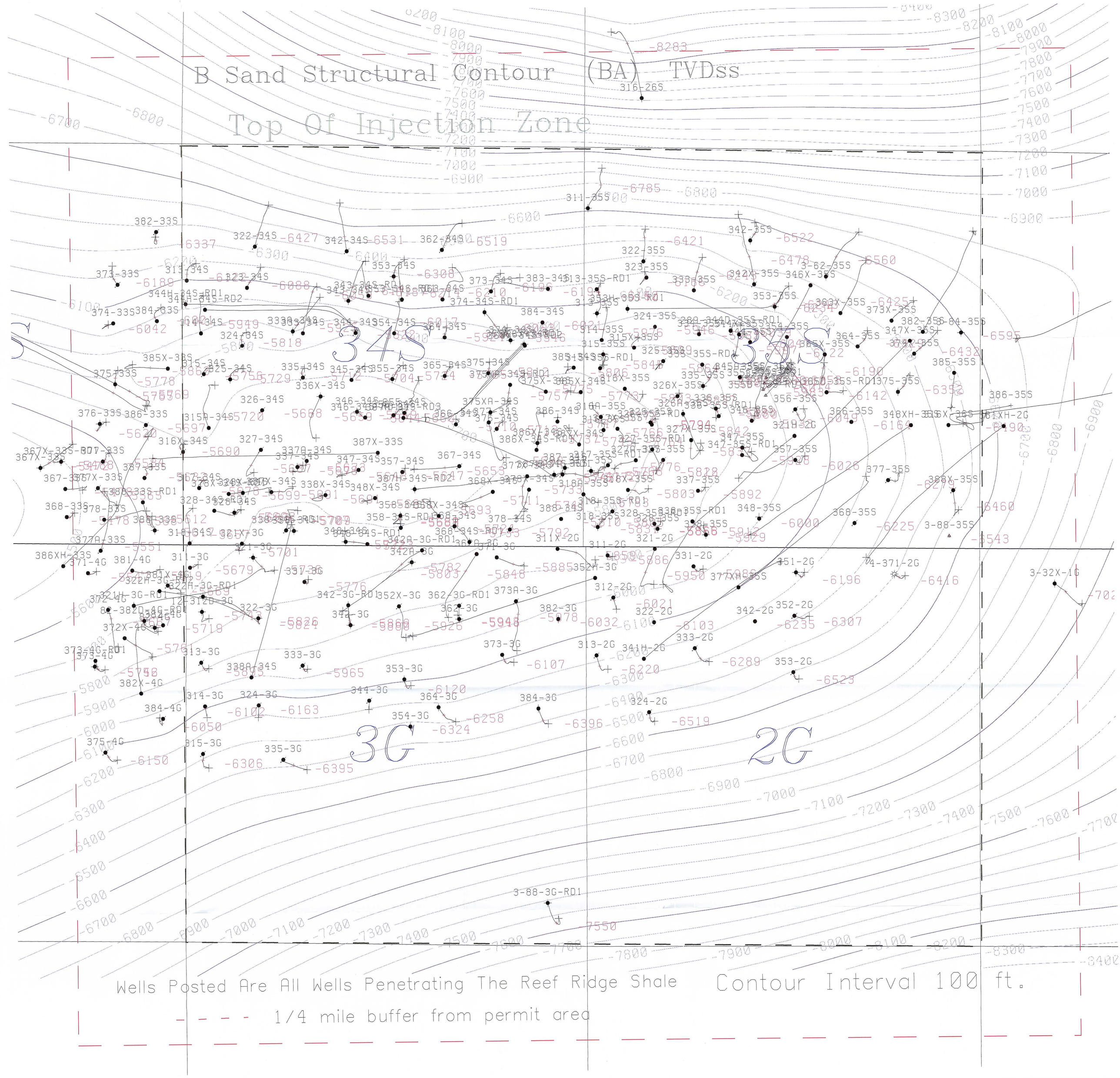
B Sand Structural Contour (BA) TVDss
Top Of Injection Zone
34S
35S
3G
2G
Wells Posted Are All Wells Penetrating The Reef Ridge Shale
Contour Interval 100 ft.
1/4 mile buffer from permit area

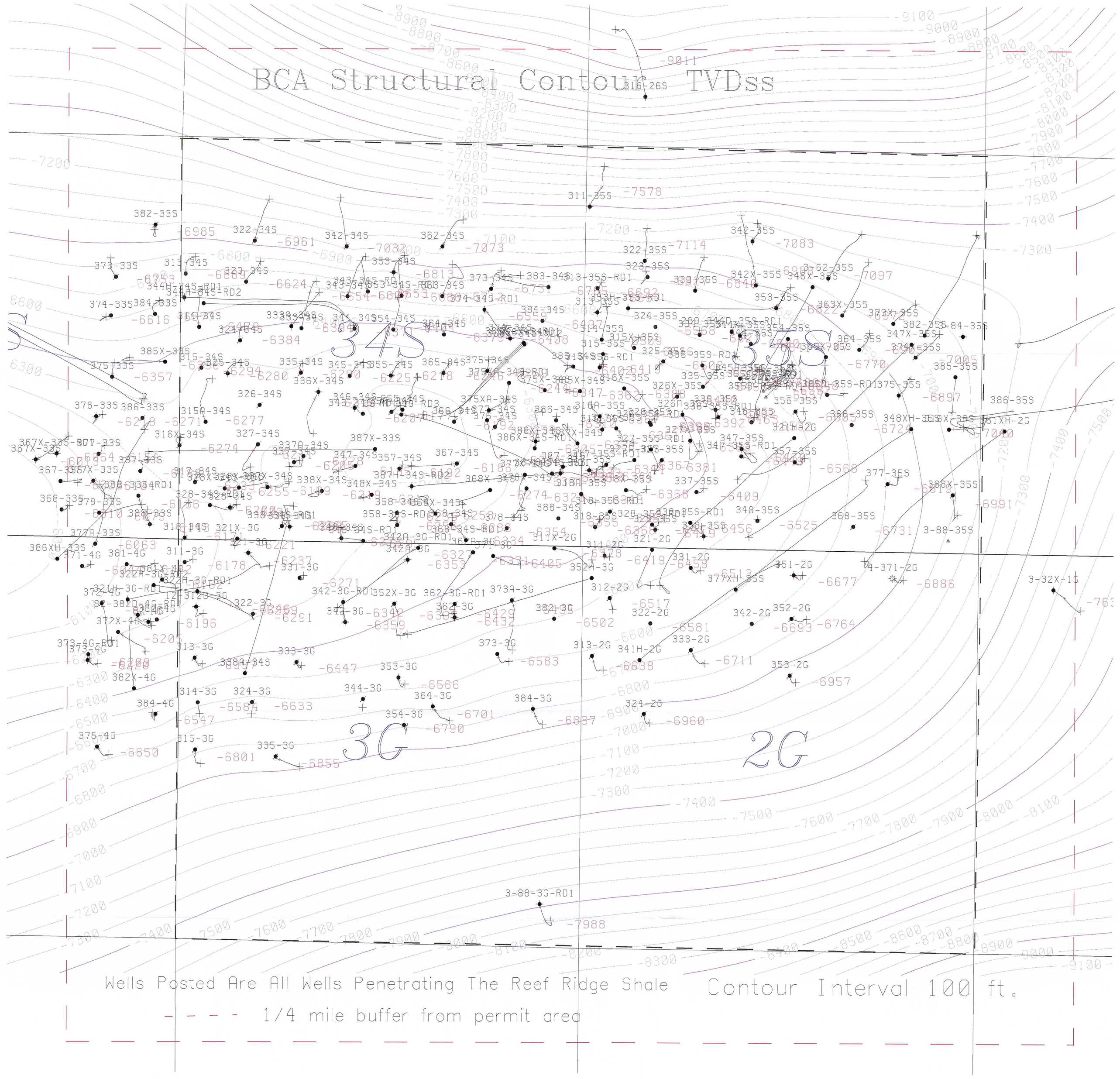
BCA Structural Contour TVDss
34S
35S
3G
2G
Wells Posted Are All Wells Penetrating The Reef Ridge Shale
Contour Interval 100 ft.
1/4 mile buffer from permit area

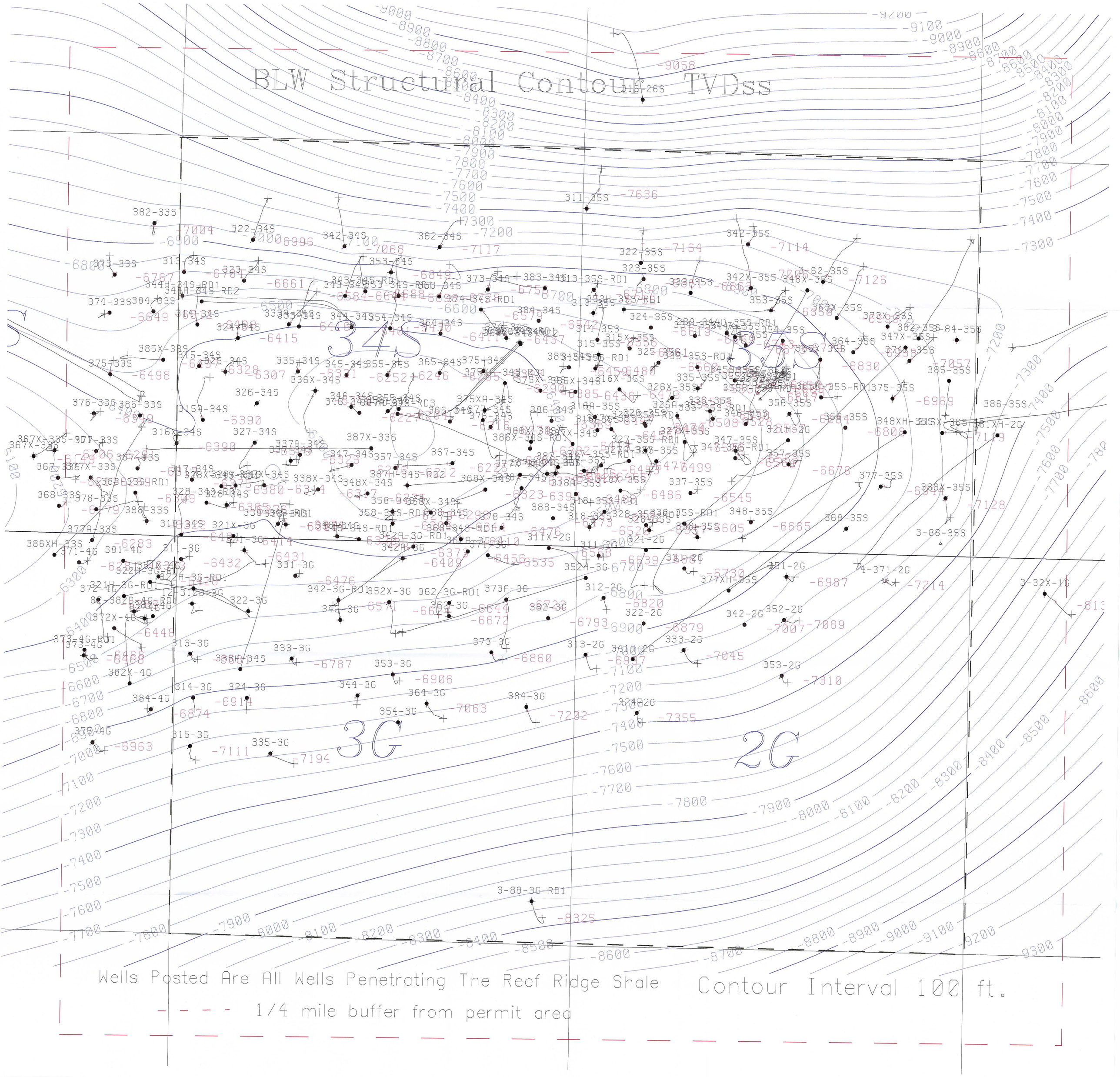
BLW Structural Contour TVDss
34S
35S
3G
2G
Wells Posted Are All Wells Penetrating The Reef Ridge Shale
Contour Interval 100 ft.
1/4 mile buffer from permit area

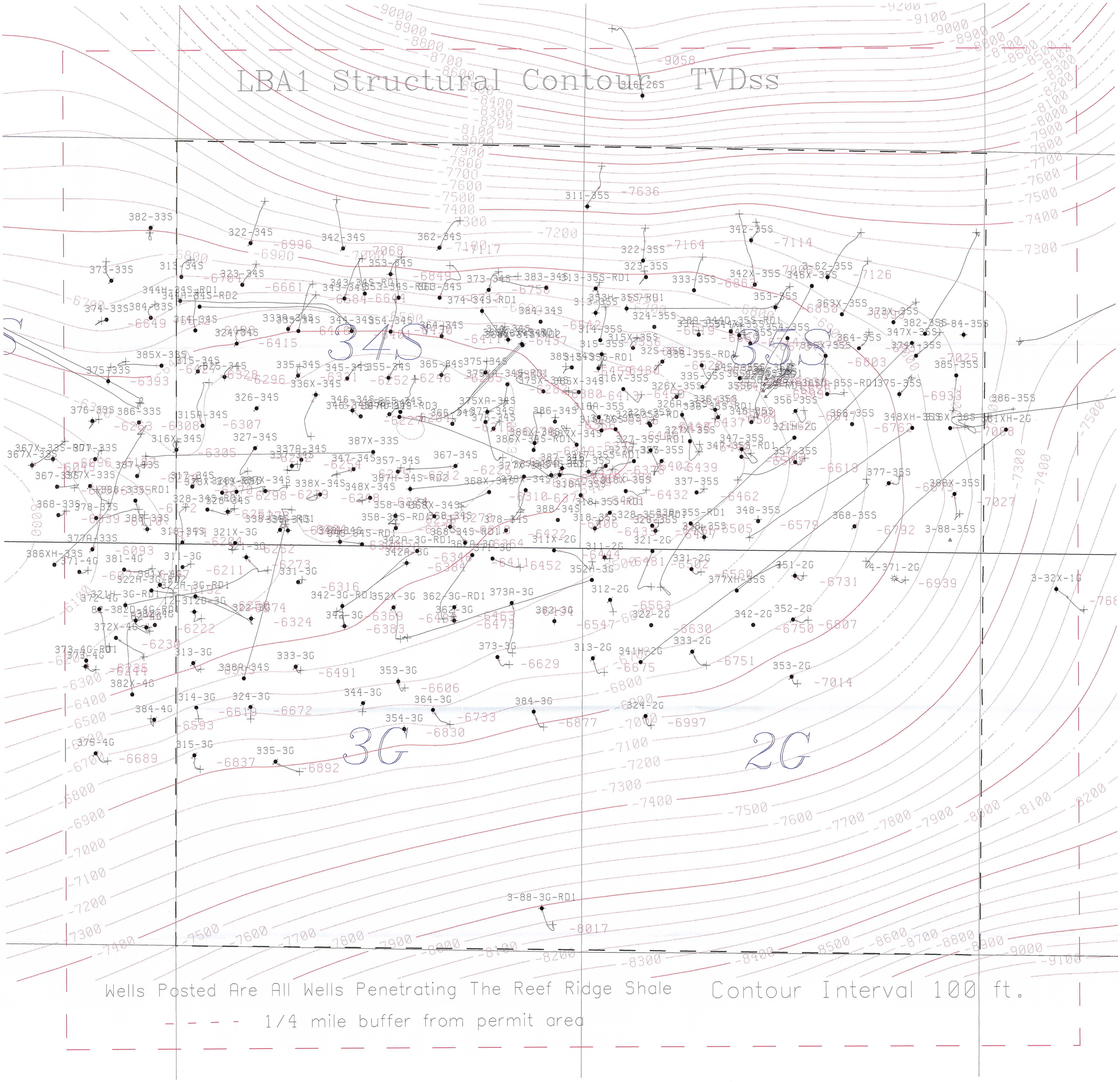
LBA1 Structural Contour TVDss
34S
35S
3G
2G
Wells Posted Are All Wells Penetrating The Reef Ridge Shale
Contour Interval 100 ft.
1/4 mile buffer from permit area

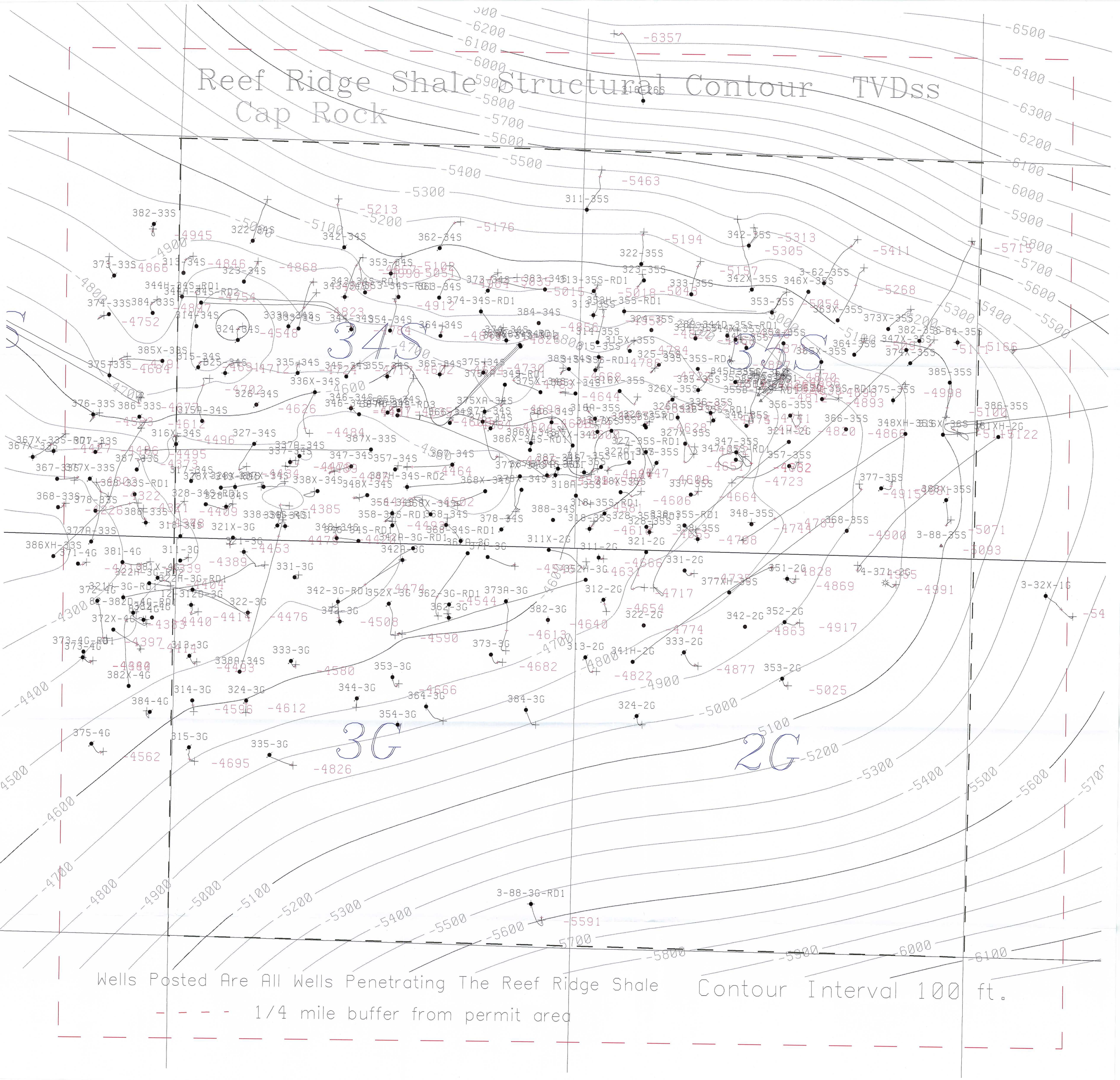
Reef Ridge Shale Structural Contour TVDss
Cap Rock
34S
35S
3G
2G
Wells Posted Are All Wells Penetrating The Reef Ridge Shale
Contour Interval 100 ft.
1/4 mile buffer from permit area

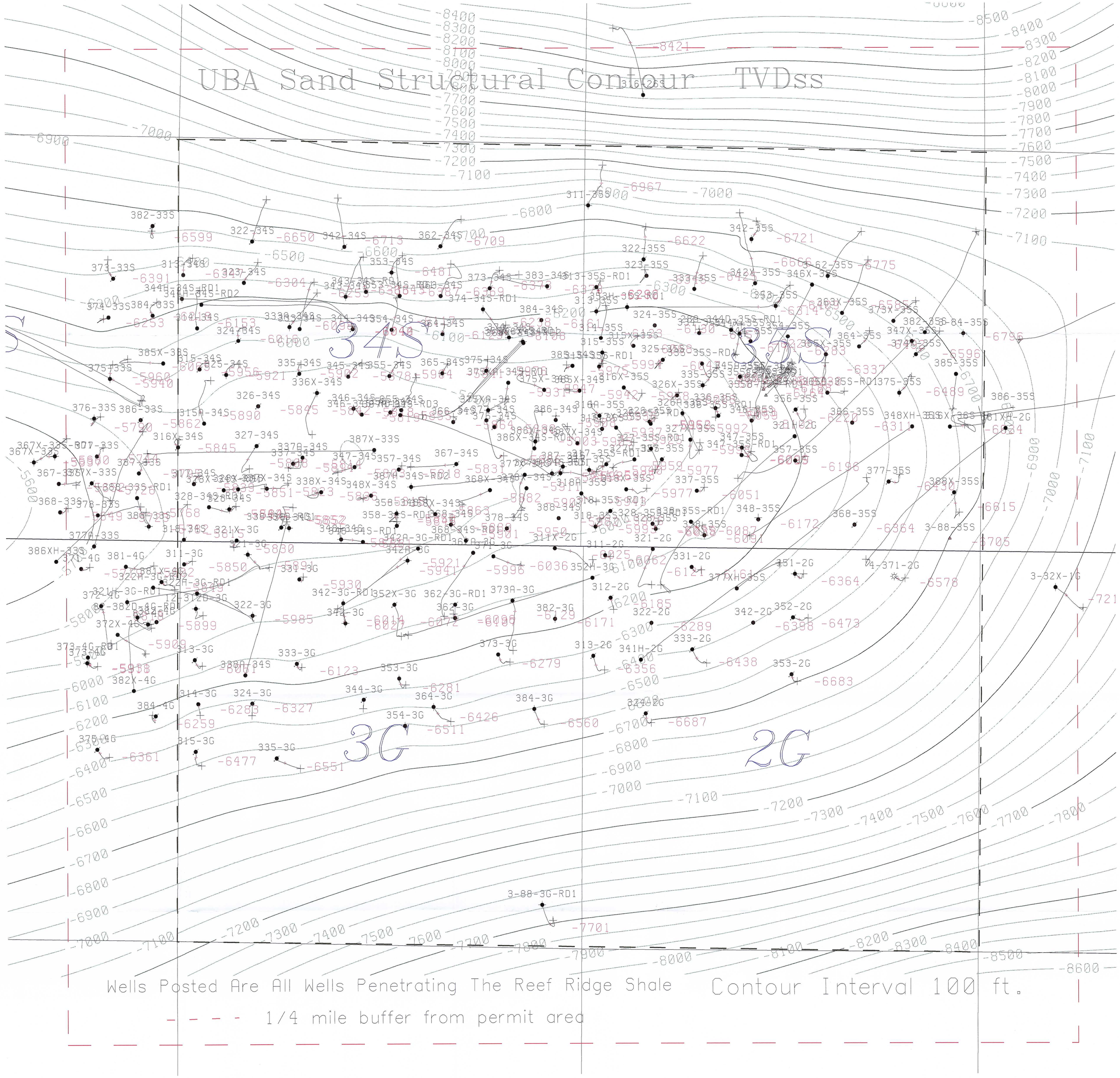
UBA Sand Structural Contour TVDss
34S
35S
3C
2G
Wells Posted Are All Wells Penetrating The Reef Ridge Shale
Contour Interval 100 ft.
1/4 mile buffer from permit area

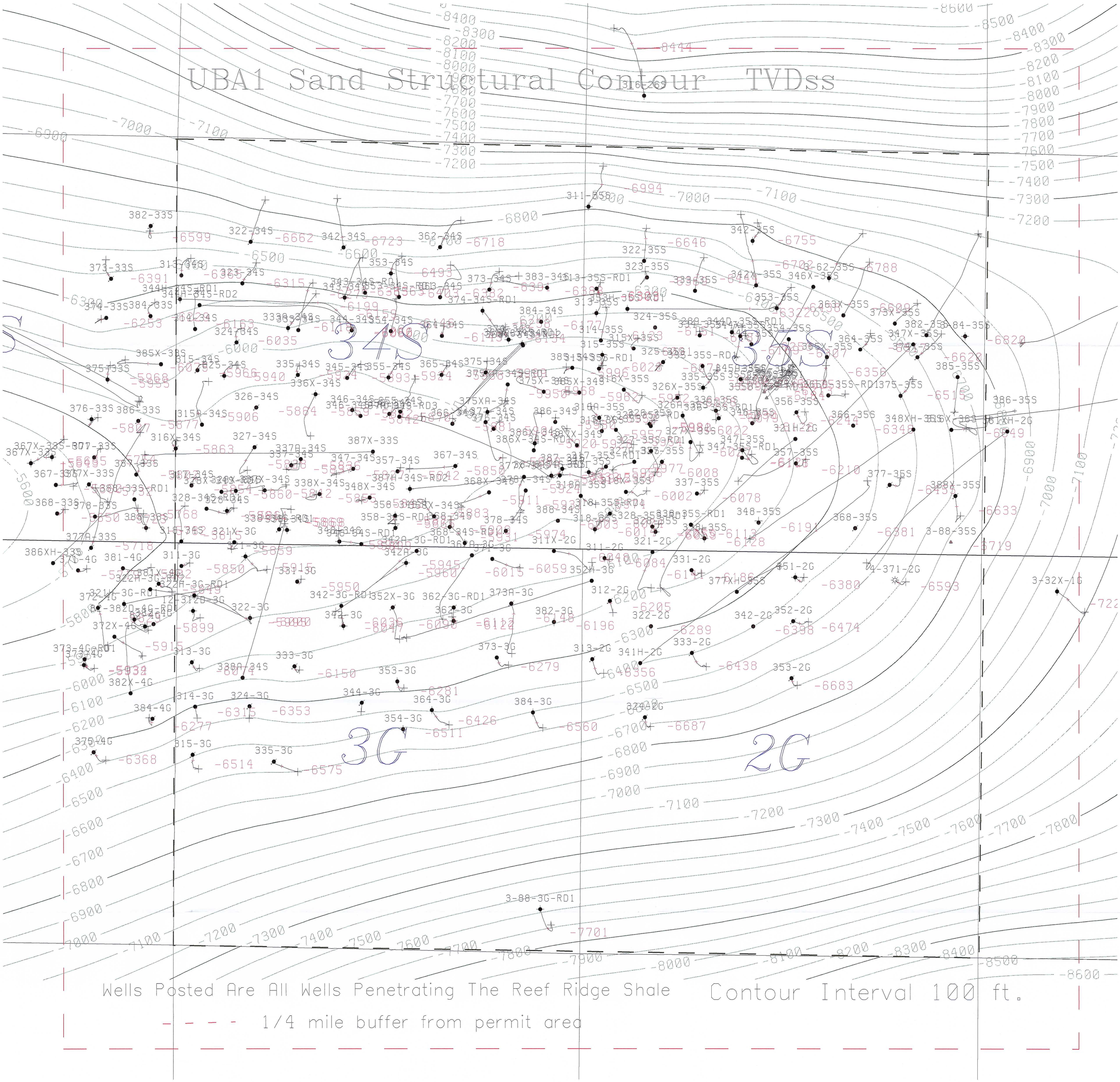
UBA1 Sand Structural Contour TVDss
34S
35S
3G
2G
Wells Posted Are All Wells Penetrating The Reef Ridge Shale
Contour Interval 100 ft.
1/4 mile buffer from permit area

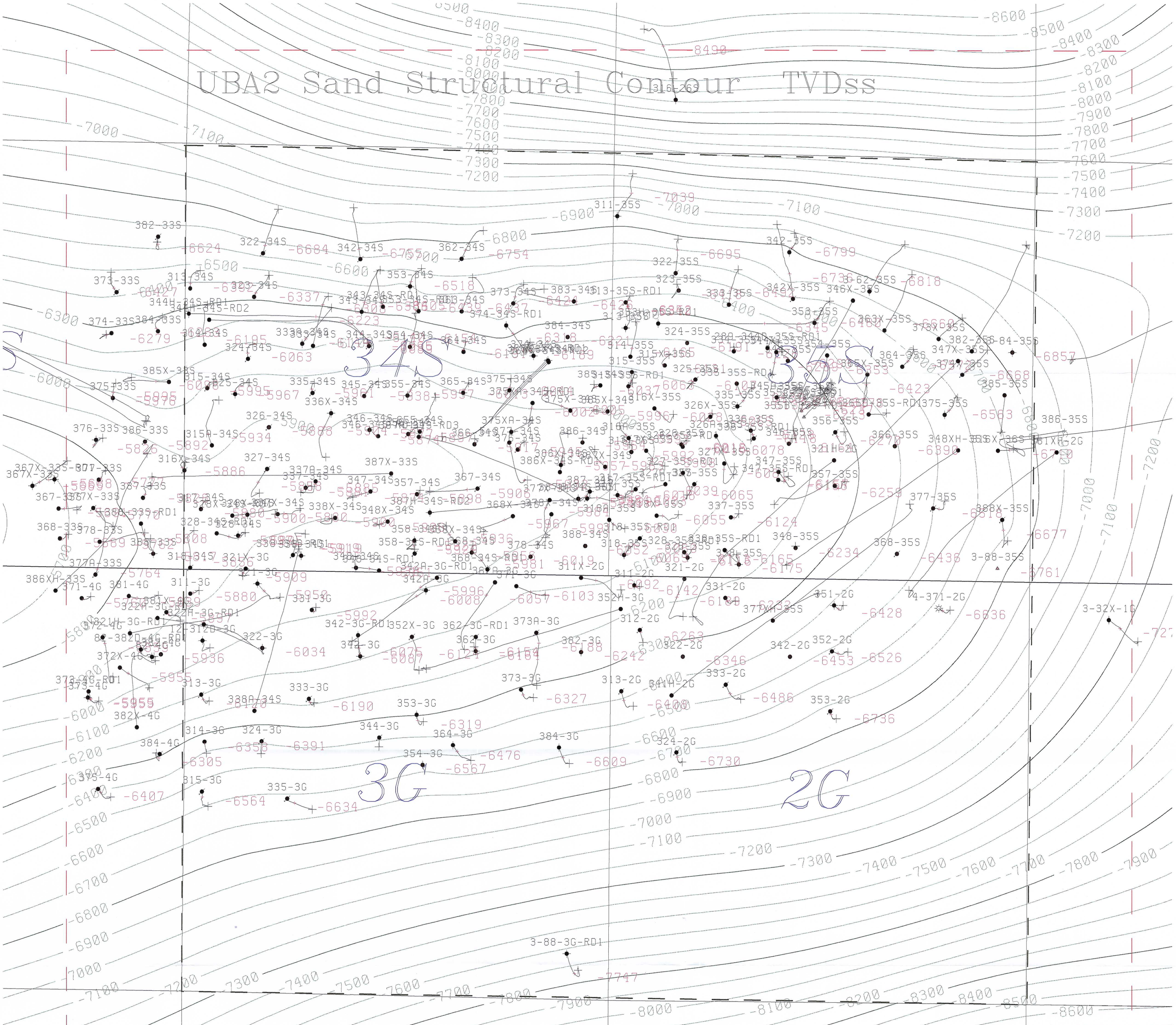

Wells Posted Are All Wells Penetrating The Reef Ridge Shale

Contour Interval 100 ft.

- - - - 1/4 mile buffer from permit area

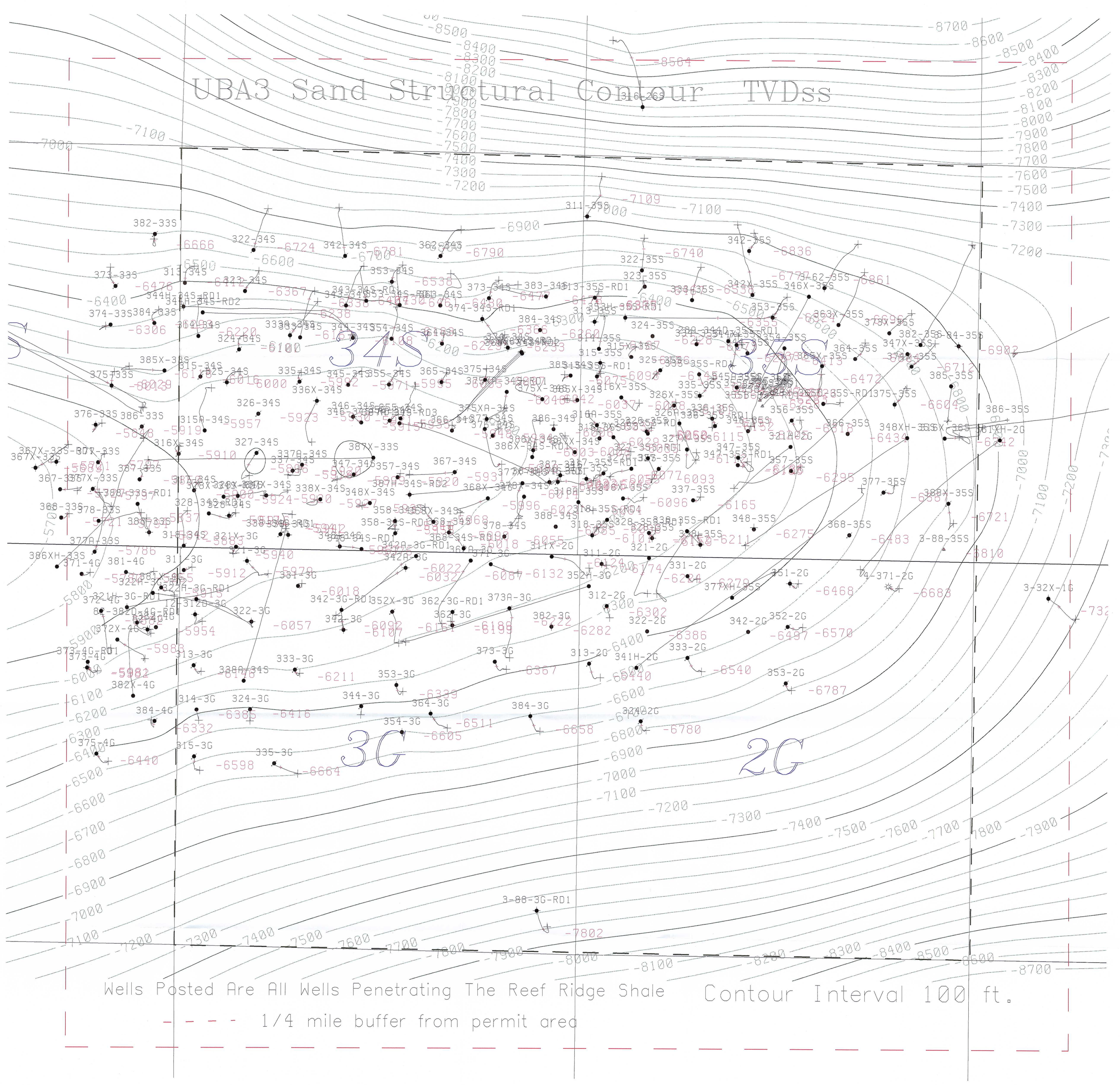
UBA3 Sand Structural Contour TVDss
34S
35S
3C
2G
Wells Posted Are All Wells Penetrating The Reef Ridge Shale
Contour Interval 100 ft.
1/4 mile buffer from permit area

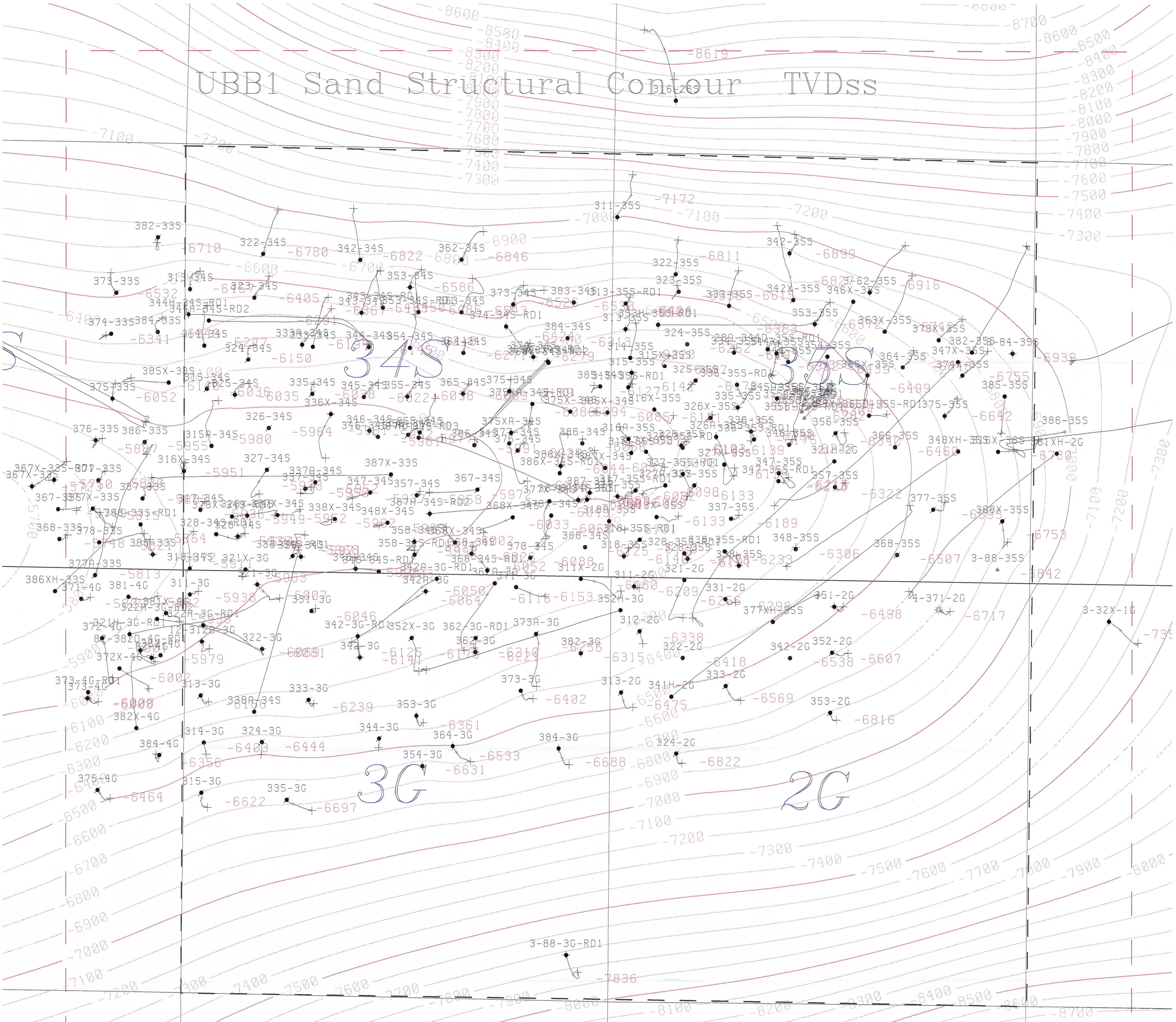
UBB1 Sand Structural Contour TVDss
34S
35S
3G
2G
Wells Posted Are All Wells Penetrating The Reef Ridge Shale
Contour Interval 100 ft.
1/4 mile buffer from permit area

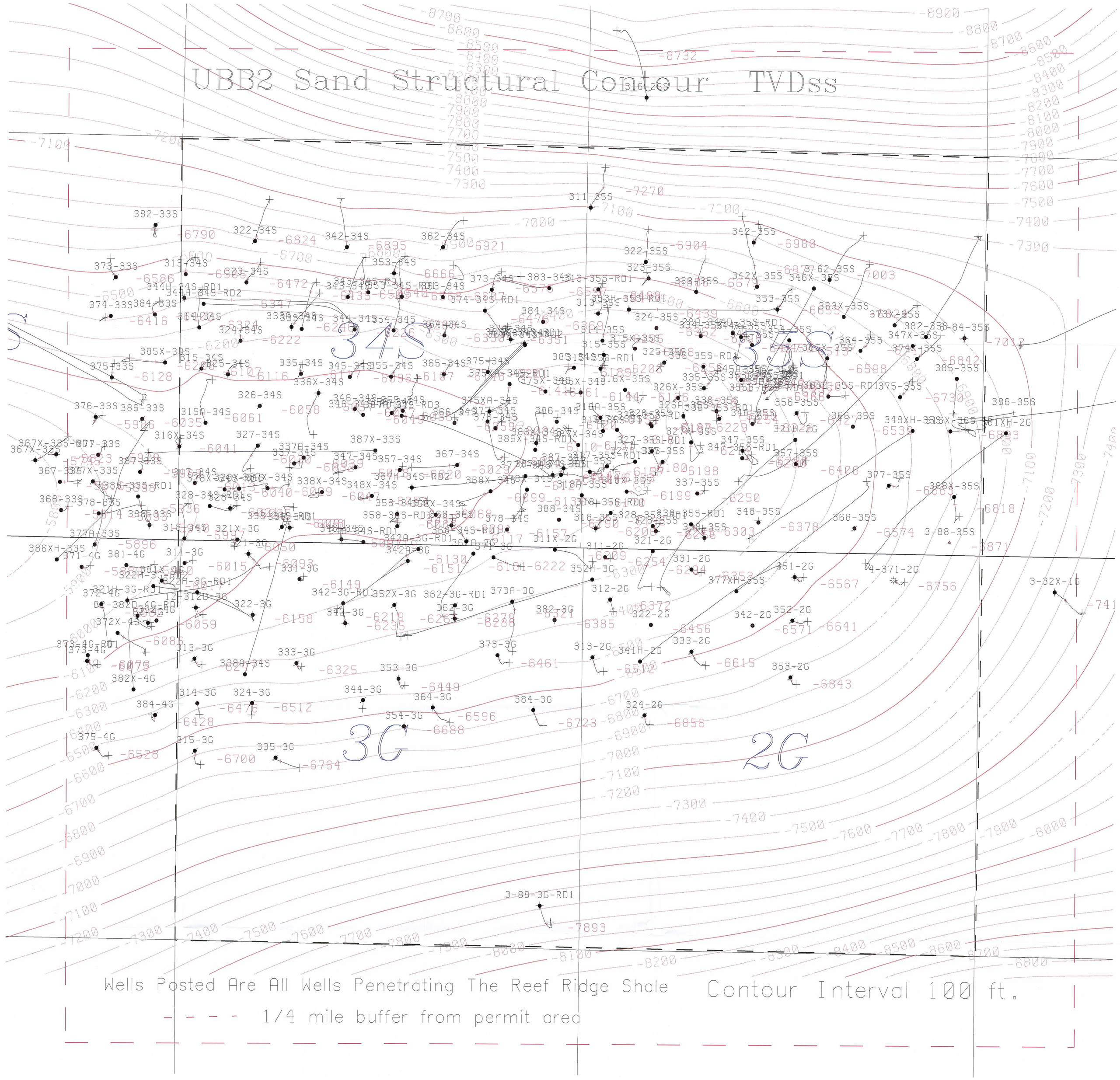
UBB2 Sand Structural Contour TVDss
34S
33S
3G
2G
Wells Posted Are All Wells Penetrating The Reef Ridge Shale
Contour Interval 100 ft.
1/4 mile buffer from permit area

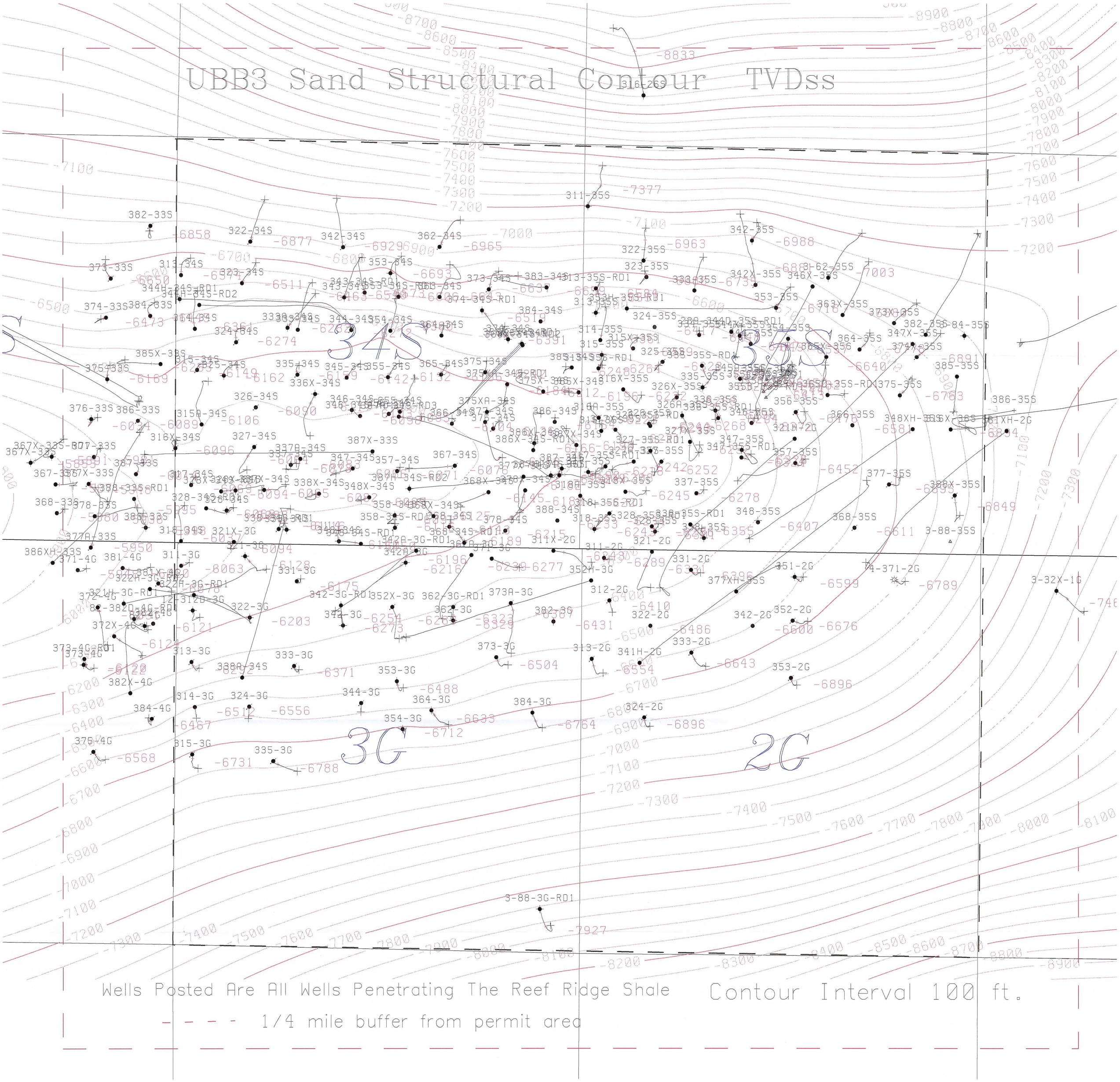
UBB3 Sand Structural Contour TVDss
34S
35S
3G
2G
Wells Posted Are All Wells Penetrating The Reef Ridge Shale
Contour Interval 100 ft.
1/4 mile buffer from permit area

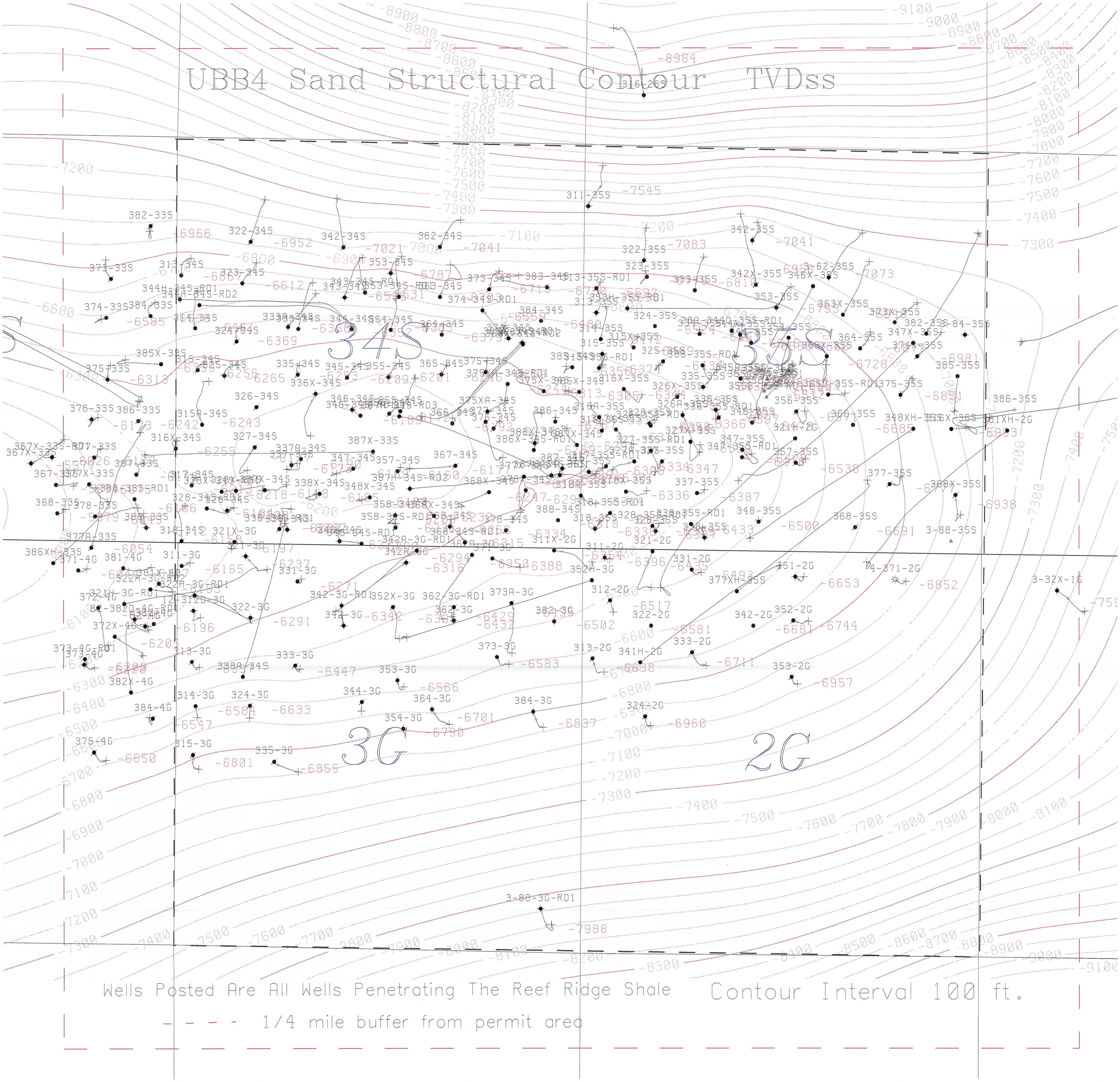
UBB4 Sand Structural Contour TVDss
34S
35S
3G
2G
Wells Posted Are All Wells Penetrating The Reef Ridge Shale
Contour Interval 100 ft.
1/4 mile buffer from permit area

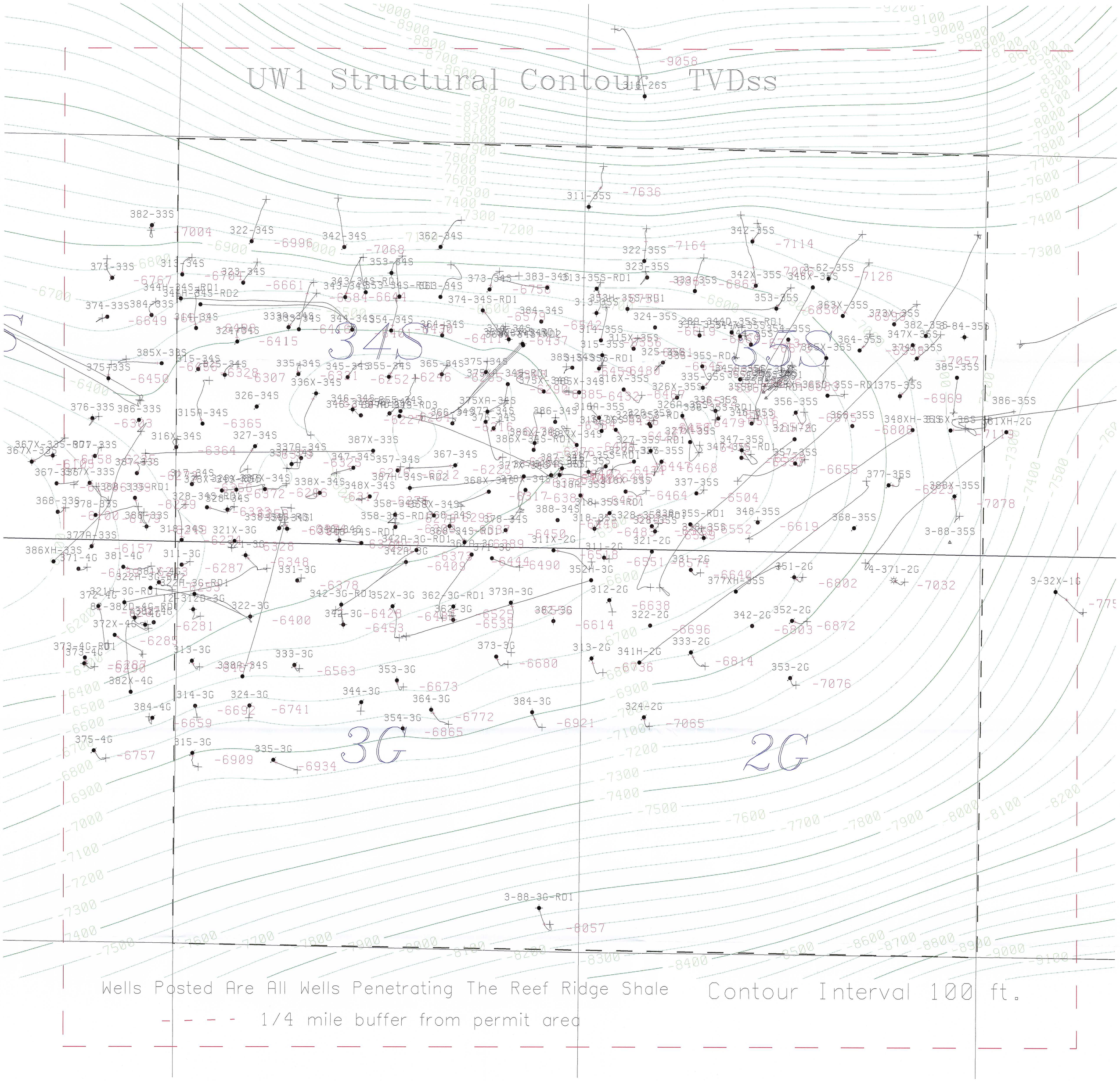
UW1 Structural Contour TVDss
34S
35S
3G
2G
Wells Posted Are All Wells Penetrating The Reef Ridge Shale
Contour Interval 100 ft.
1/4 mile buffer from permit area

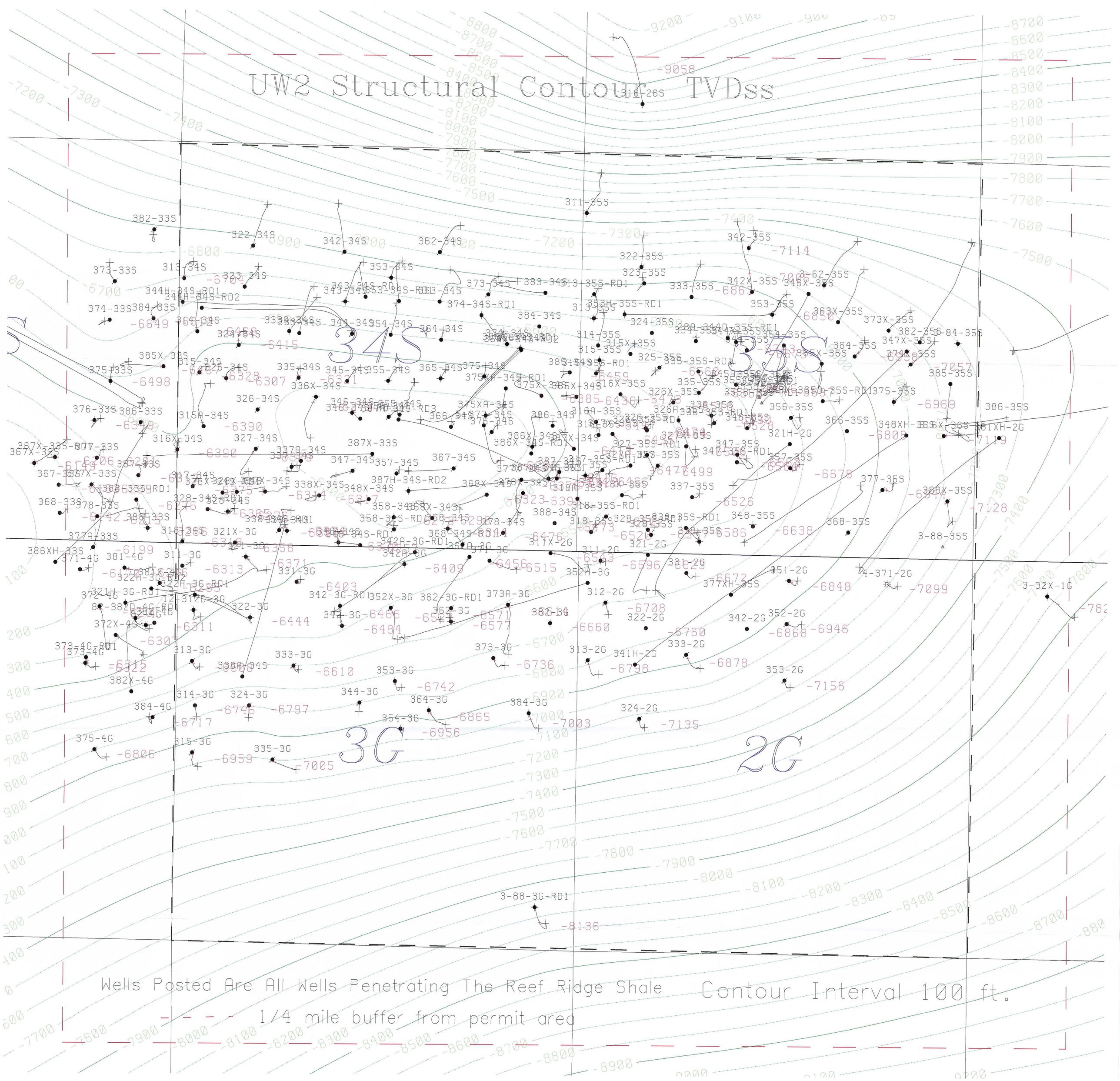
UW2 Structural Contour TVDss
34S
35S
3G
2G
Wells Posted Are All Wells Penetrating The Reef Ridge Shale
1/4 mile buffer from permit area
Contour Interval 100 ft.

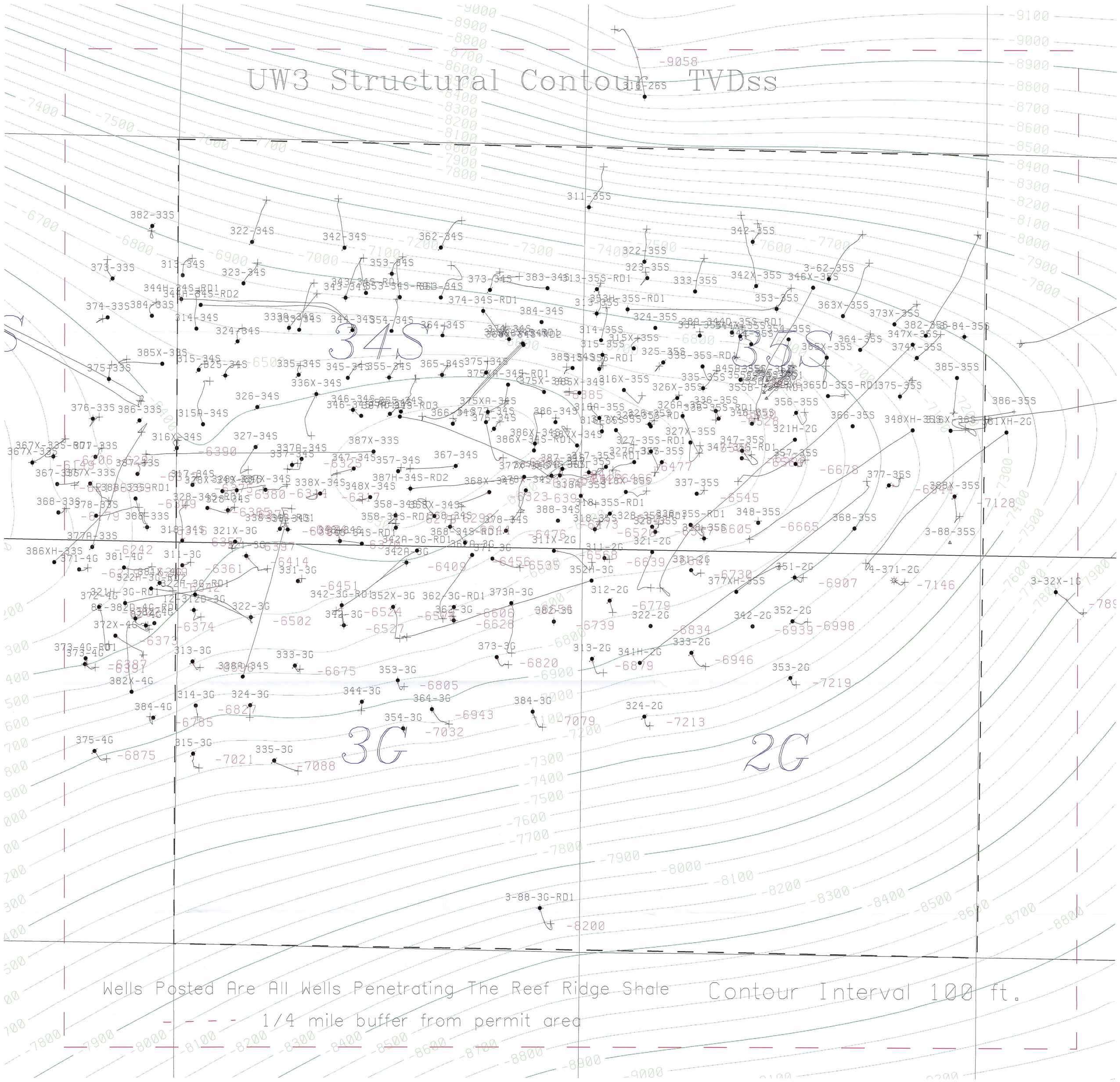
UW3 Structural Contour TVDss
34S
35S
3G
2G
Wells Posted Are All Wells Penetrating The Reef Ridge Shale
Contour Interval 100 ft.
1/4 mile buffer from permit area

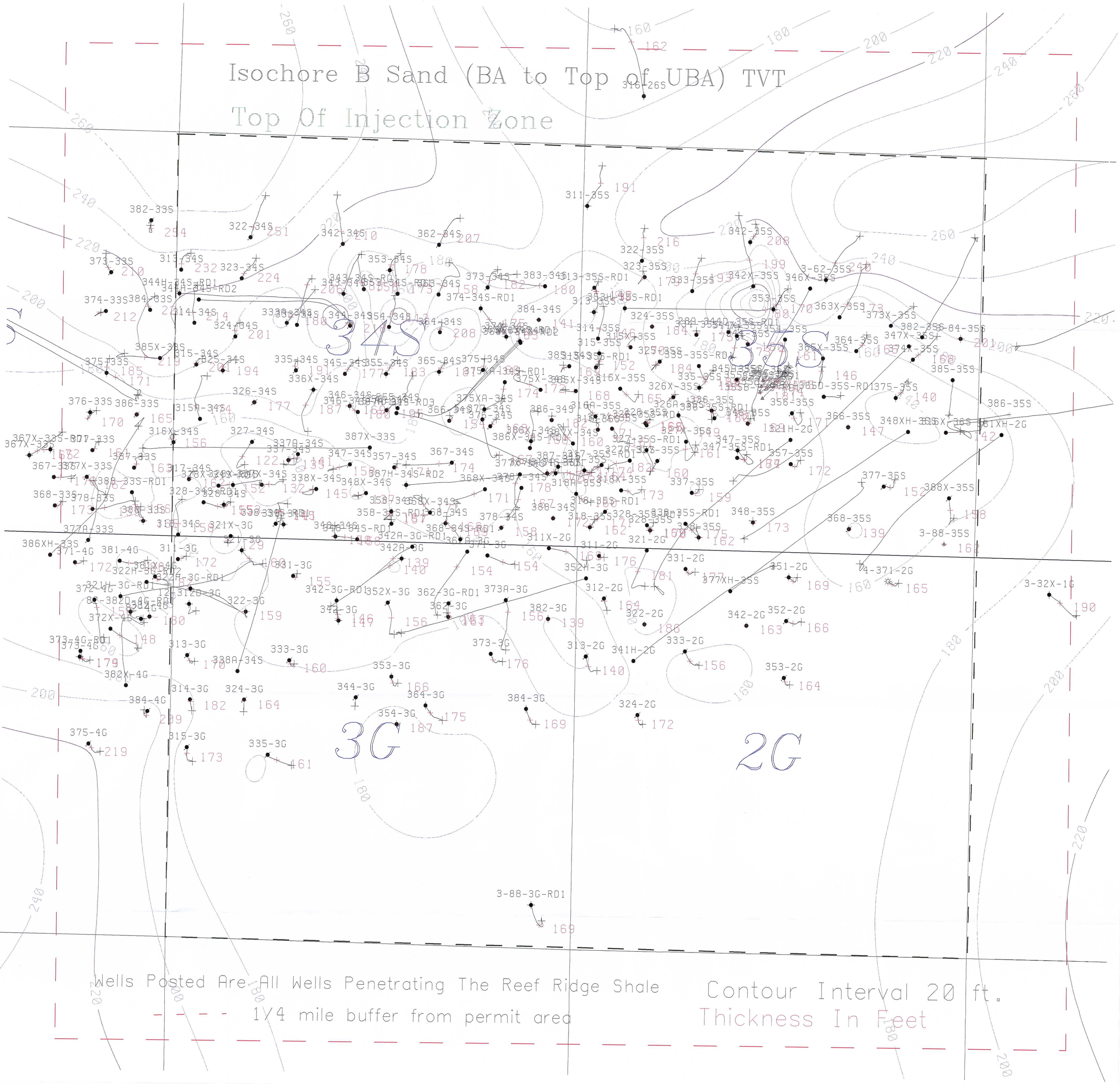
Isochore B Sand (BA to Top of UBA) TVT
Top Of Injection Zone
3-4S
3-5S
3G
2G
Wells Posted Are All Wells Penetrating The Reef Ridge Shale
1/4 mile buffer from permit area
Contour Interval 20 ft.
Thickness In Feet

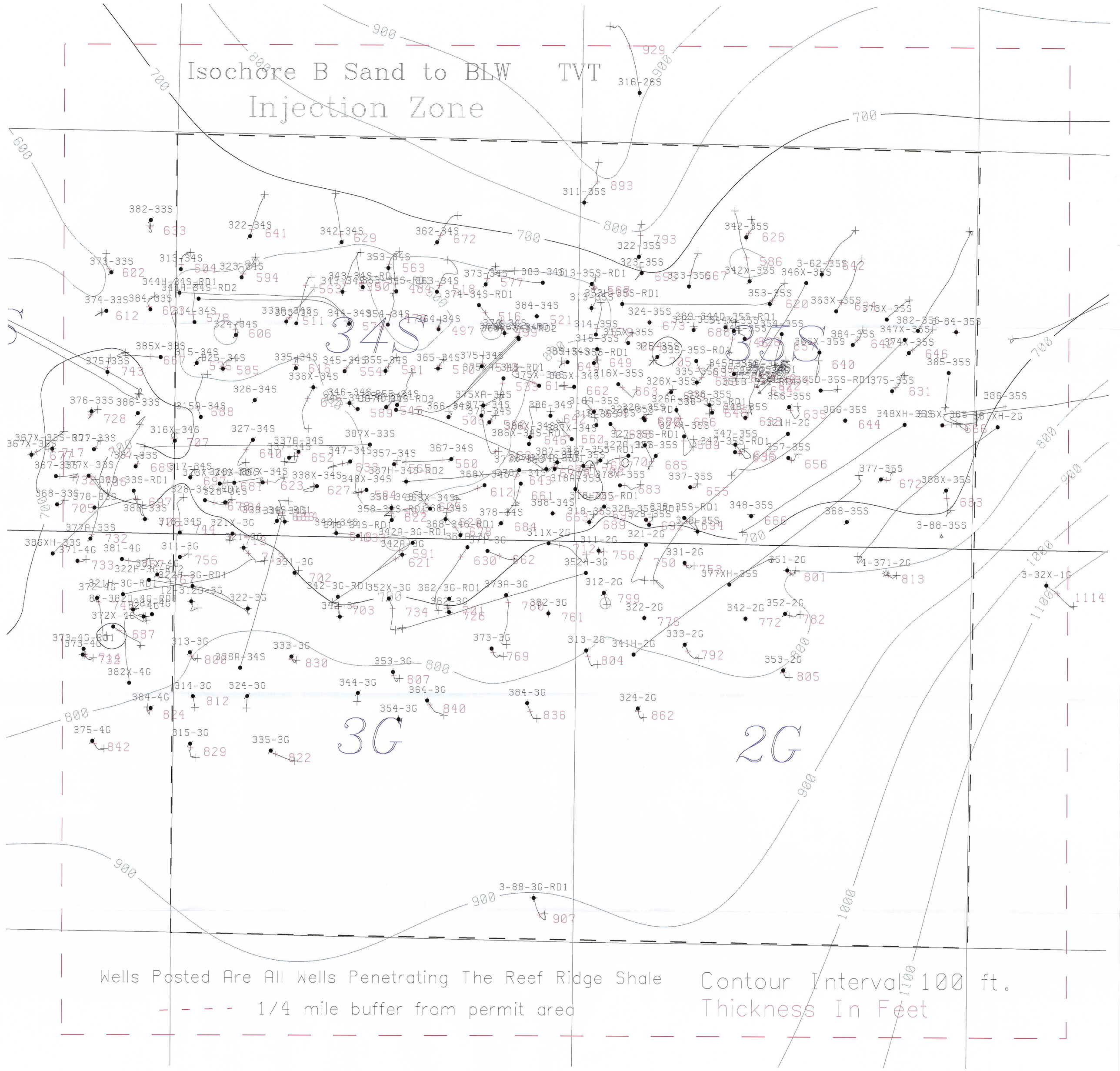
Isochore B Sand to BLW TVT
Injection Zone
34S
35S
3G
2G
Wells Posted Are All Wells Penetrating The Reef Ridge Shale
1/4 mile buffer from permit area
Contour Interval 100 ft.
Thickness In Feet

Isochore BCA (BCA to Top of LBA1) TVT

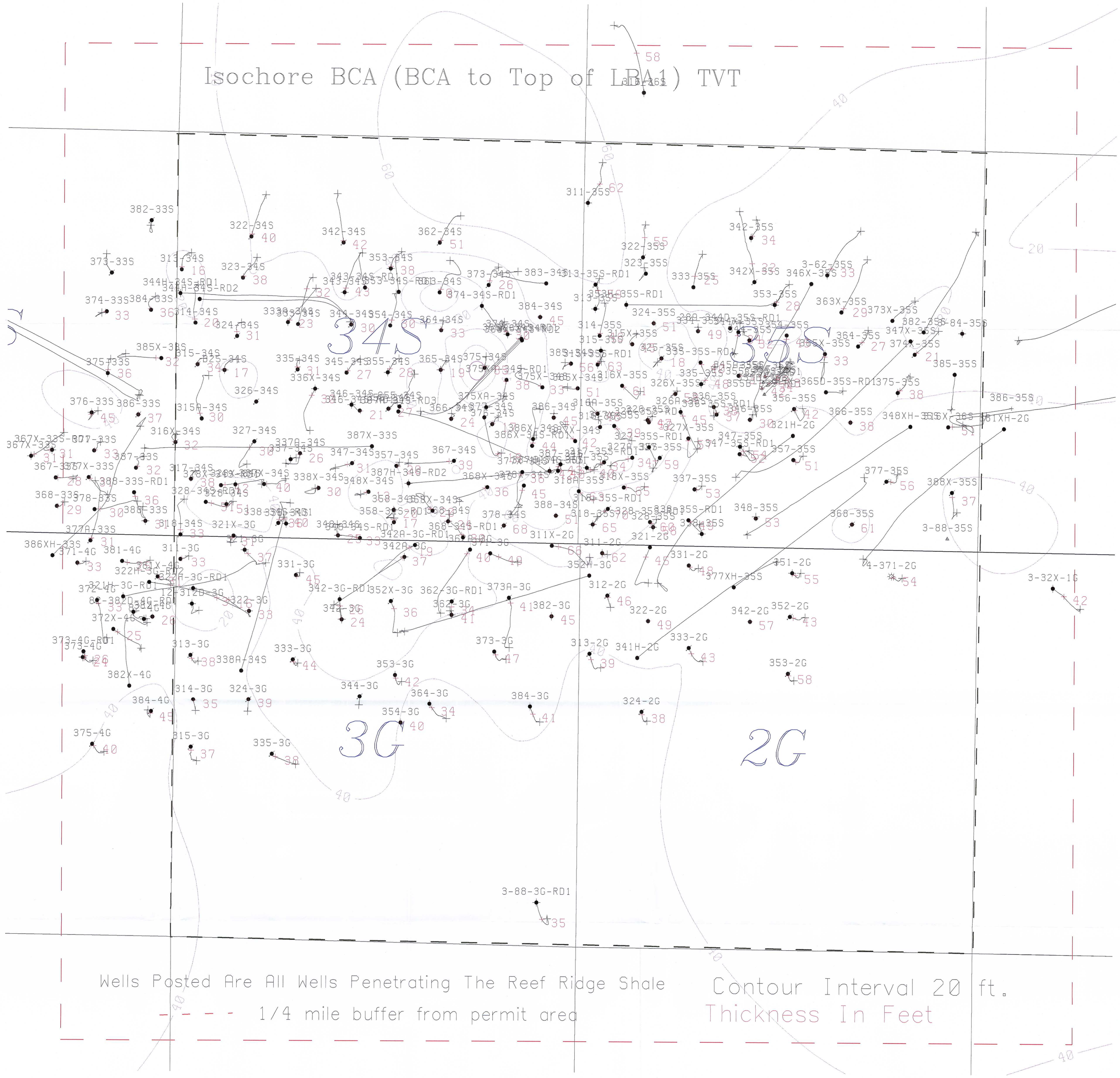

Isochore LBA1 (LBA1 to Top of UW1) TVT

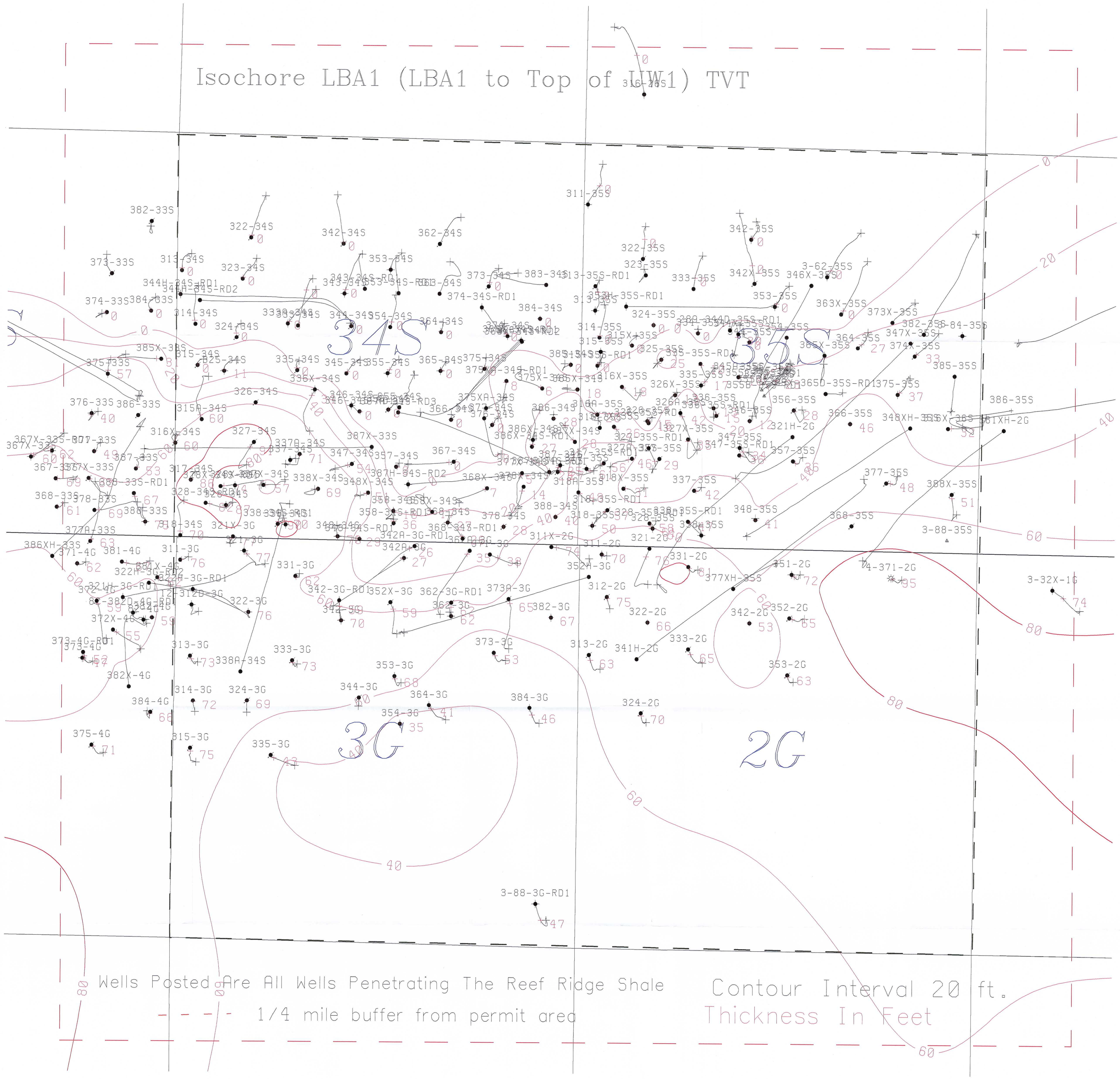

Isochore LW Sands (LW1 to BLW) TVT

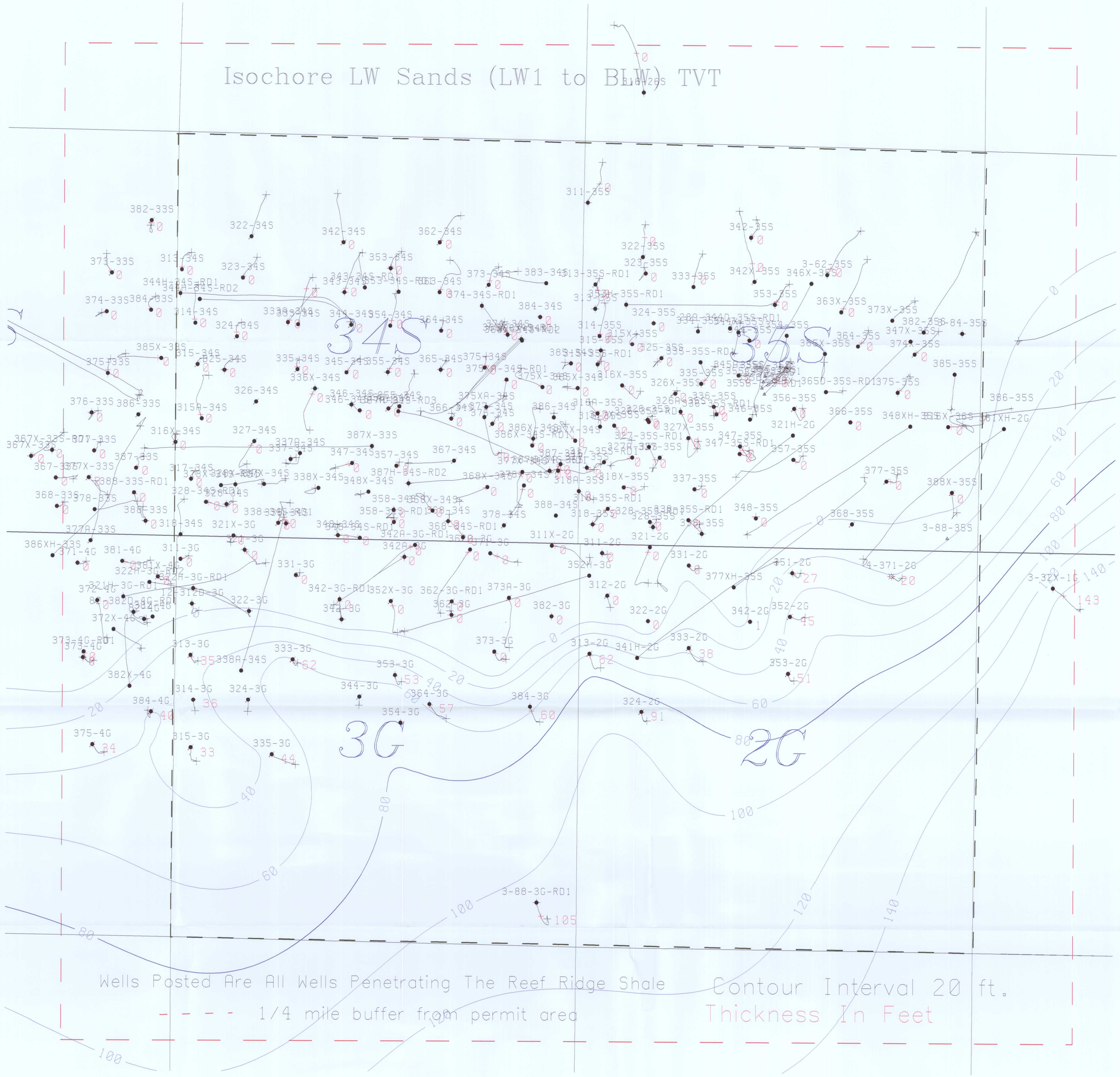

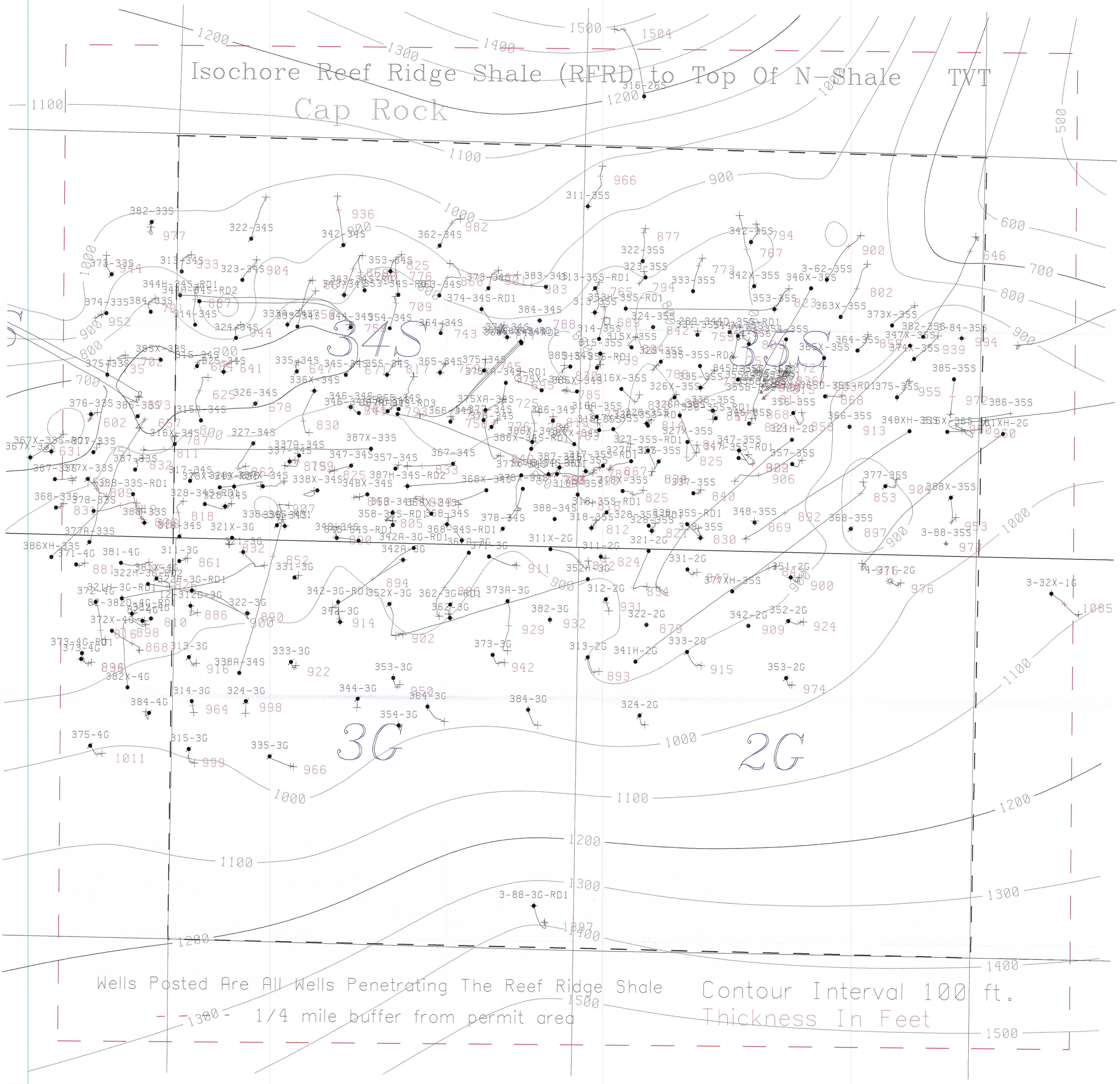
Isochore Reef Ridge Shale (RFRD) to Top Of N-Shale TVT
Cap Rock
34S
35S
3G
2G
Wells Posted Are All Wells Penetrating The Reef Ridge Shale
1/4 mile buffer from permit area
Contour Interval 100 ft.
Thickness In Feet

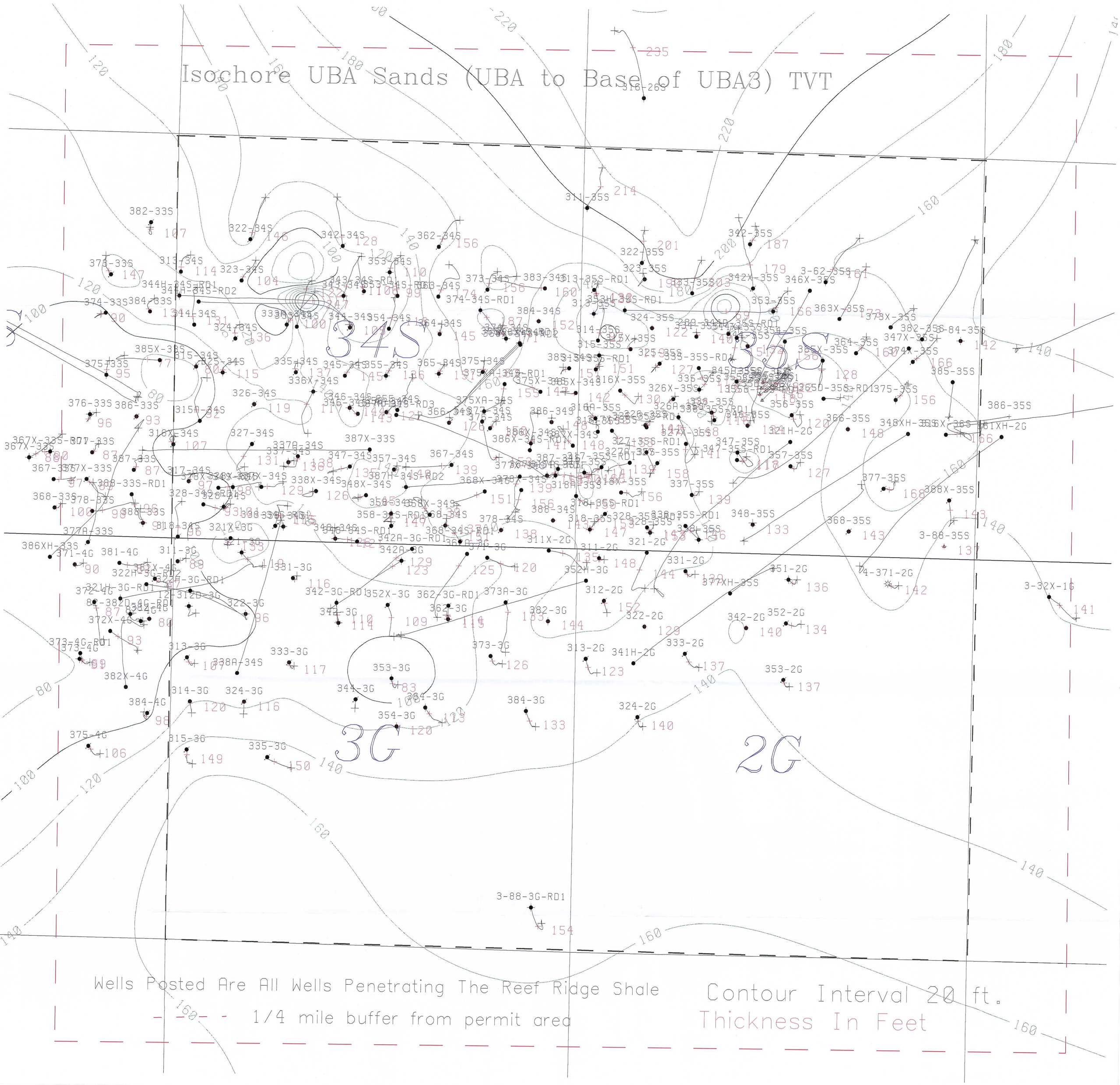
Isochore UBA Sands (UBA to Base of UBA3) TVT
34S
3S
3G
2G
Wells Posted Are All Wells Penetrating The Reef Ridge Shale
1/4 mile buffer from permit area
Contour Interval 20 ft.
Thickness In Feet

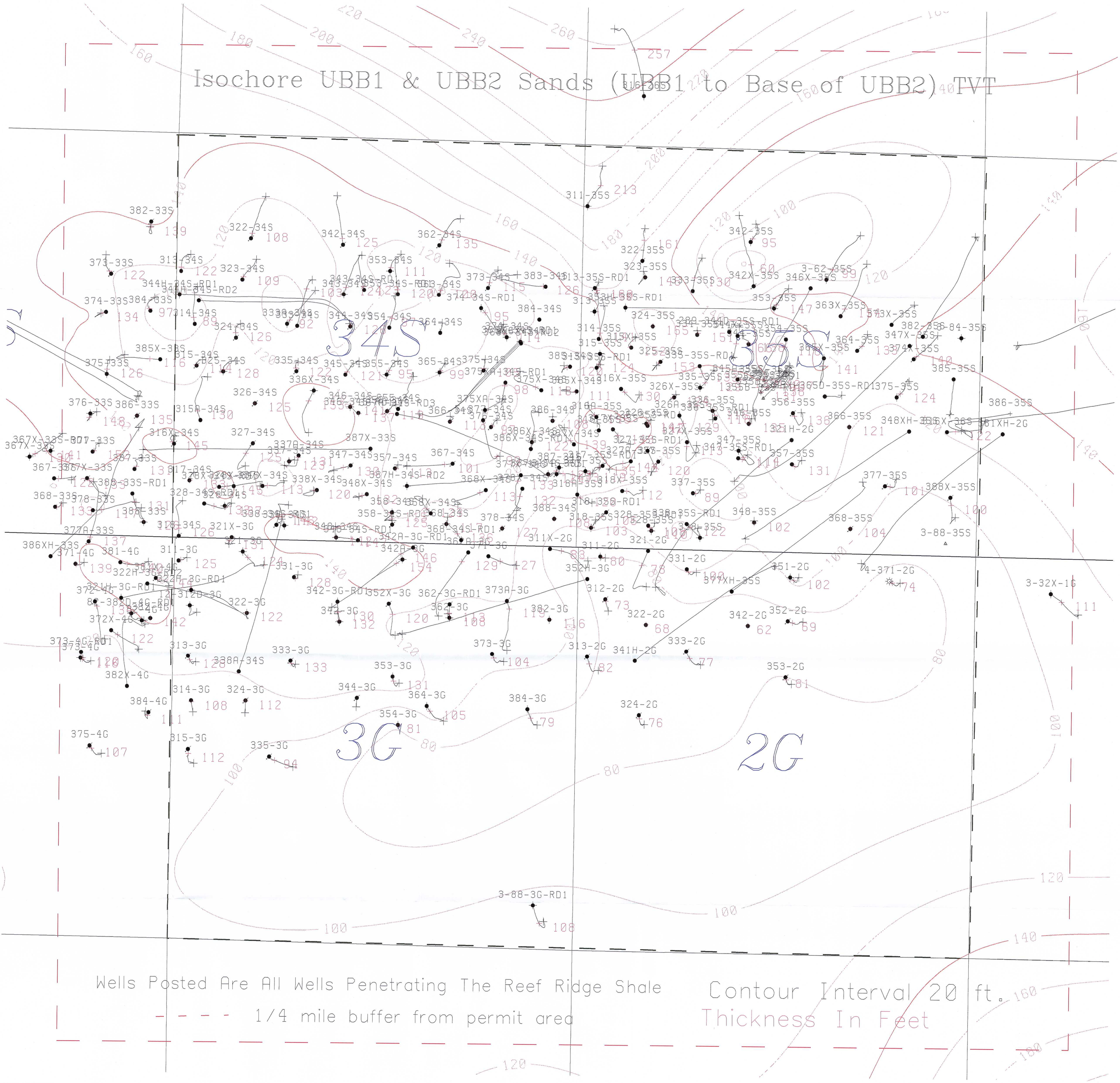
Isochore UBB1 & UBB2 Sands (UBB1 to Base of UBB2) TVT
34S
33S
3G
2G
Wells Posted Are All Wells Penetrating The Reef Ridge Shale
1/4 mile buffer from permit area
Contour Interval 20 ft.
Thickness In Feet

Isochore UBB3 & UBB4 Sands (UBB3 to Base of UBB4) TVT

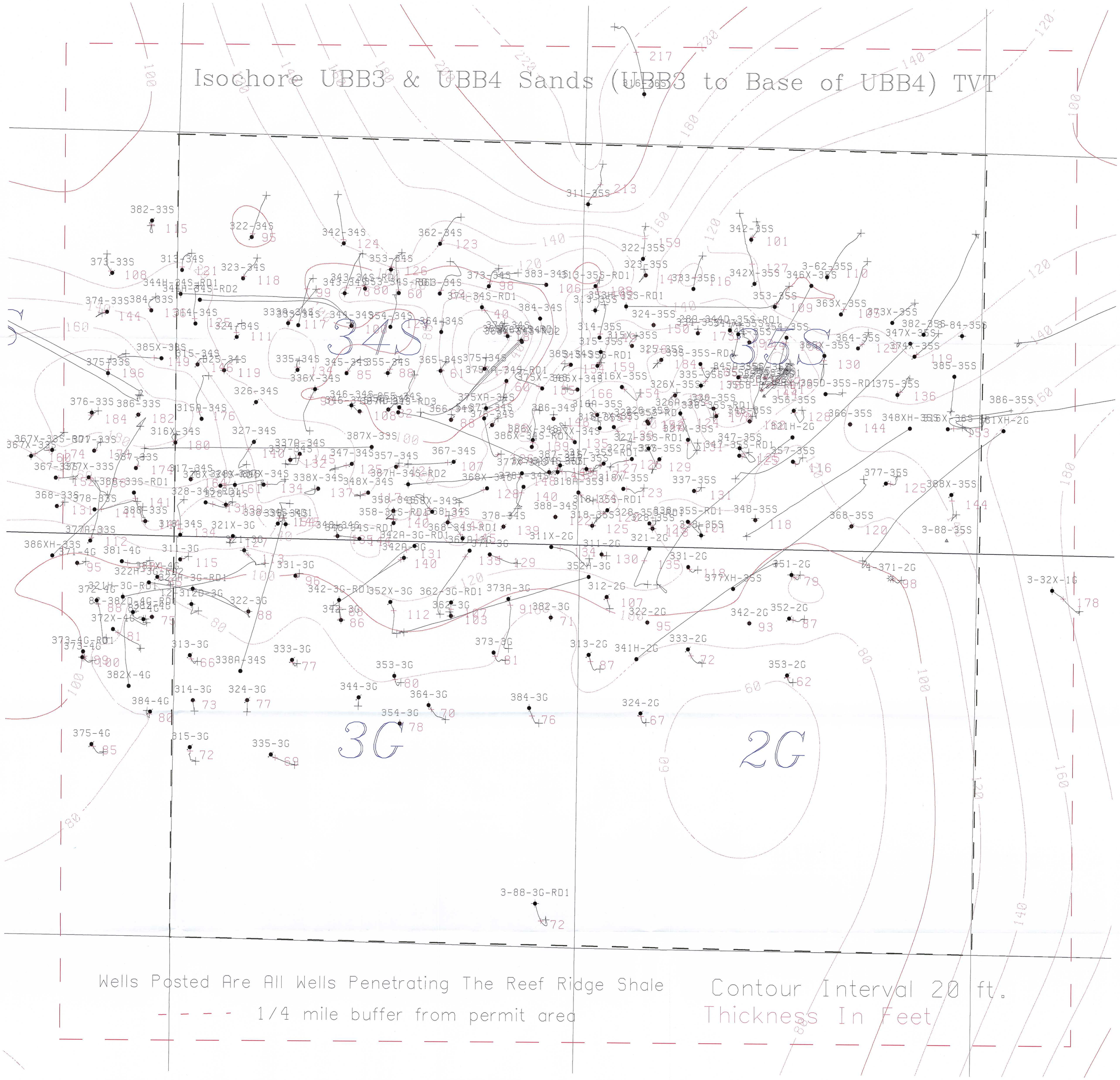

Wells Posted Are All Wells Penetrating The Reef Ridge Shale

- - - - 1/4 mile buffer from permit area

Contour Interval 20 ft.

Thickness In Feet

Isochore UW Sands (UW1 to Base of UW3) TVT

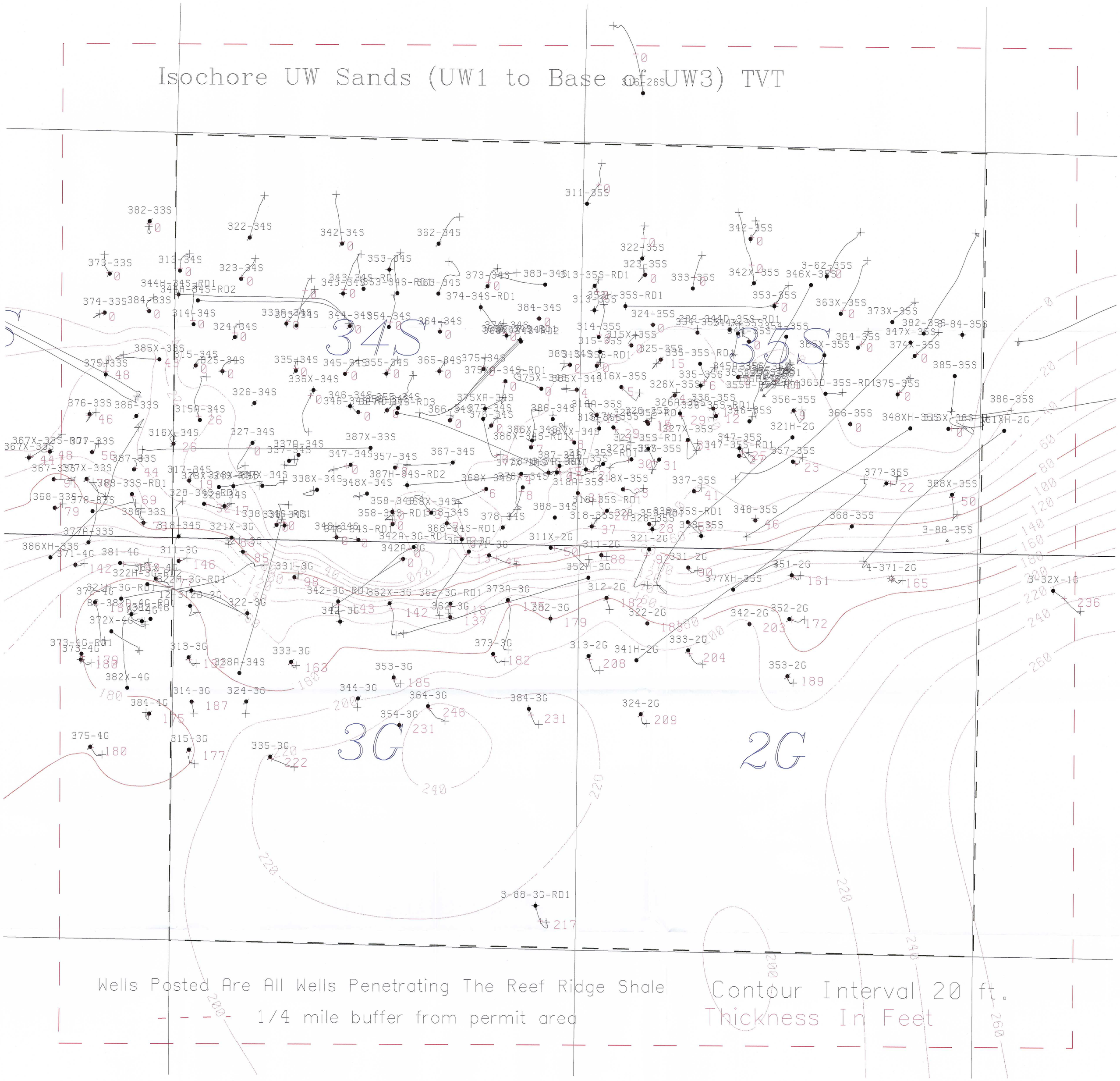

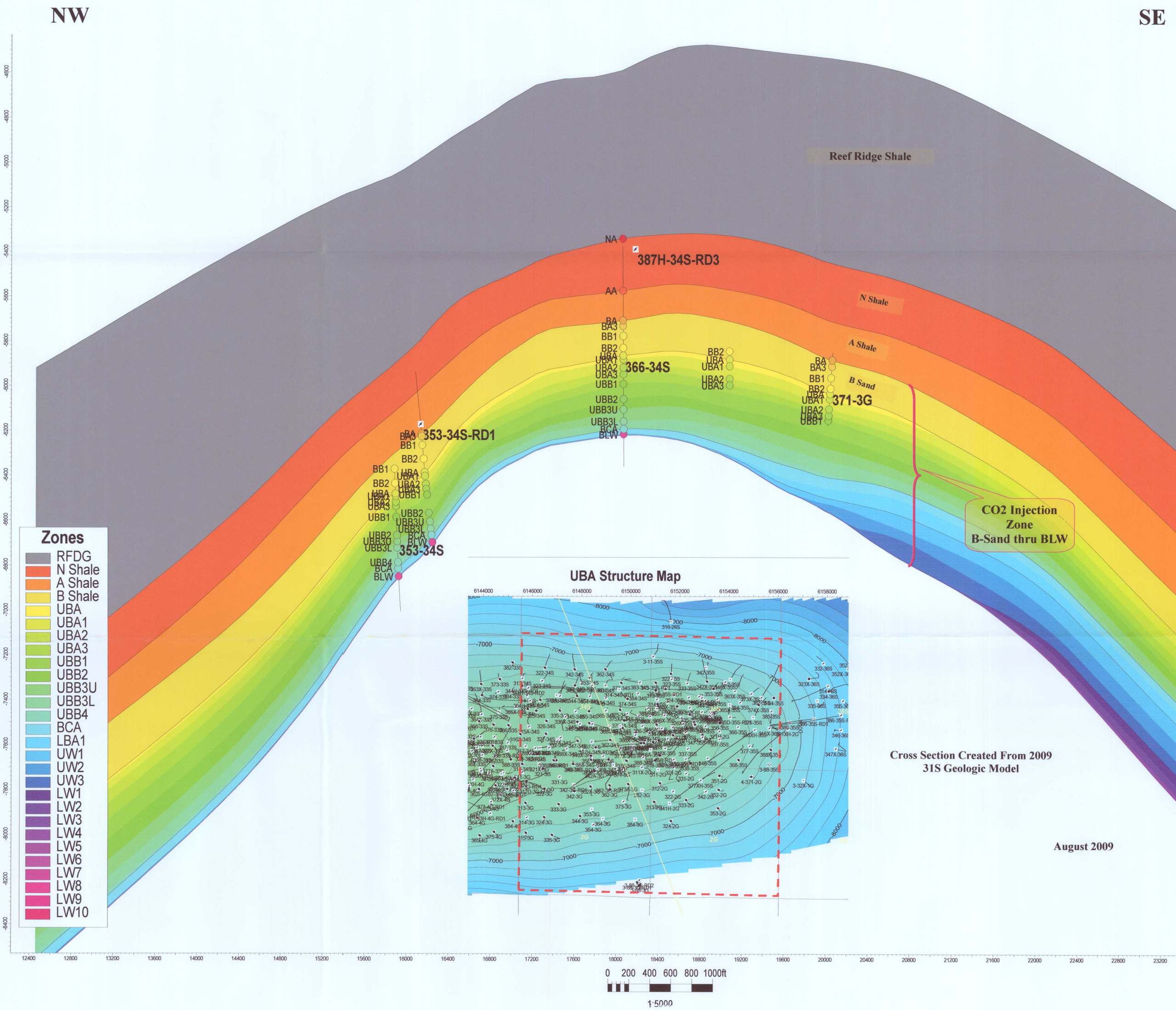
NW
SE
Reef Ridge Shale
N Shale
A Shale
B Sand
387H-34S-RD3
366-34S
371-3G
353-34S-RD1
353-34S
CO2 Injection Zone B-Sand thru BLW
Zones
RFDG
N Shale
A Shale
B Shale
UBA
UBA1
UBA2
UBA3
UBB1
UBB2
UBB3U
UBB3L
UBB4
BCA
LBA1
UW1
UW2
UW3
LW1
LW2
LW3
LW4
LW5
LW6
LW7
LW8
LW9
LW10
UBA Structure Map
Cross Section Created From 2009 31S Geologic Model
August 2009
0 200 400 600 800 1000ft
1:5000

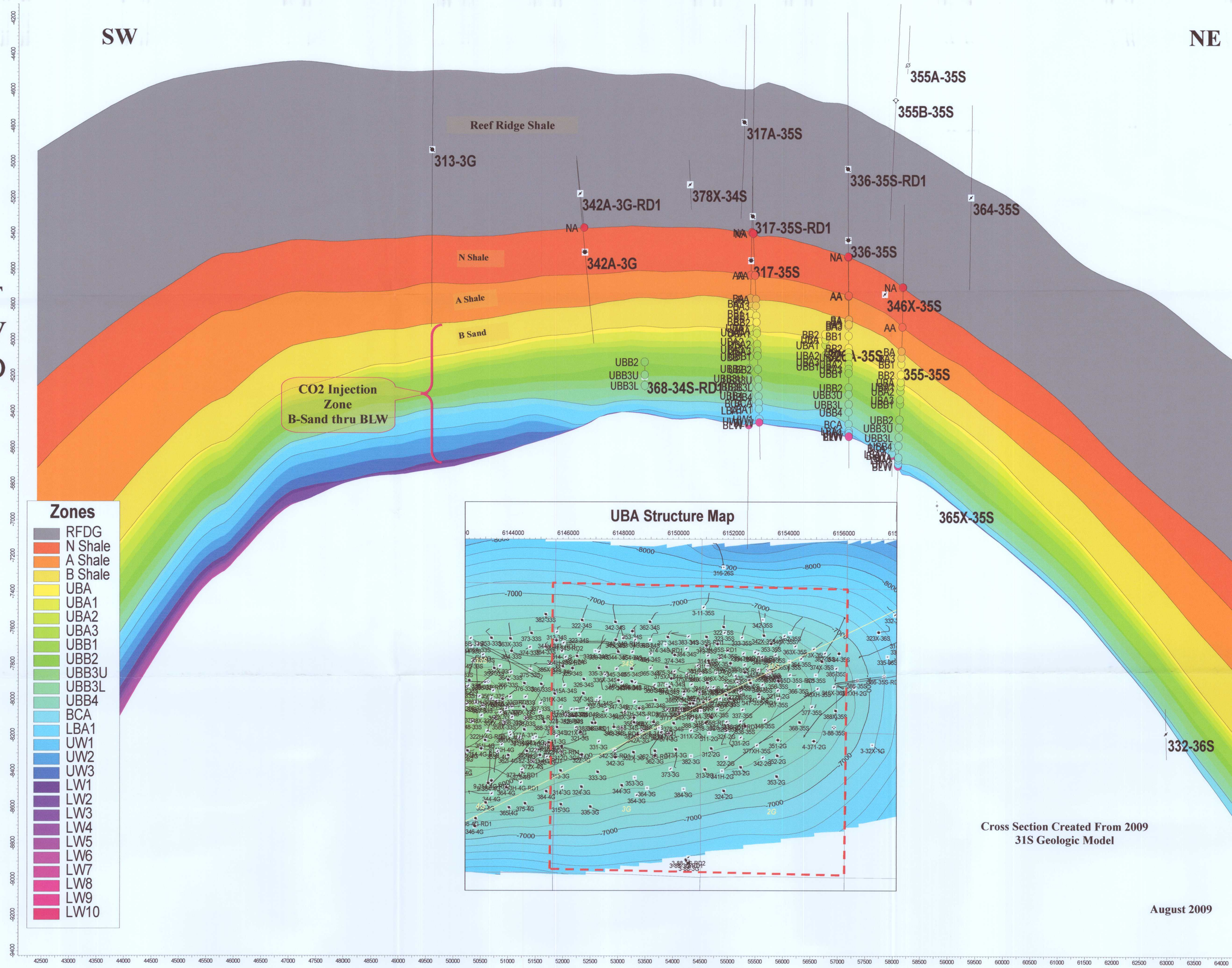

Cross Section Created From 2009
31S Geologic Model

August 2009

PETCOM

Company	OCCIDENTAL OF ELK HILLS, INC.
Well	355A-35S
Field	ELK HILLS
County	KERN — State CALIFORNIA — Country U.S.A.
Location	NAD 83 COORDINATES:
	X: 6153588.80 Y: 2289002.00

Section	35	Township	30S	Range	24E	API Num	04030233500000
Permanent Datum	G.L.			Elevation	705.6	K.B.	728.6
Log Measured From	K.B.	23.0	Above Perm Datum			D.F.	------
Drilling Meas From	K.B.					G.L.	705.6

	Run 1	Run 2	Run 3
Date	11/03/2003		
Depth - Driller	7525		
Depth - Logger	7526		
Btm Log Interval	7515		
Top Log Interval	1078		
Casing - Driller	1080		
Casing - Logger	1078		
Bitsize	9.88 X 8.75 @6597		
Type Fluid in Hole	GEL/SP101		
Dens. /Visc.	12.0 / 67.0		
pH / Fluid Loss	8.0 / 6.2		
Source of Sample	FLOWLINE		
Rm @ Meas. Temp	2.490 @ 64		
Rmf @ Meas. Temp	2.300 @ 60		
Rmc @ Meas. Temp	3.730 @ 61		
Source: Rmf / Rmc	MEAS / MEAS		
Rm @ BHT	0.900 @ 189		
Max. Rec. Temp.	189 degF		

Sandstone

355A-35S
14 Oct 2009 @ 14:02
DEPTH (FT)
Interval: 5500.00 to 7550.00
Depth Scale Ratio: 1/600

GR	DEPTH	HT90	RHOB
0 API 150	FT	0.2 OHMM 200	1.65 G/CM3 2.65
SPSTD	**MINV**	**HT30**	**NPHS**
-100 mv 0	0 OHMM 10	0.2 OHMM 200	0.6 V/V DECI 0

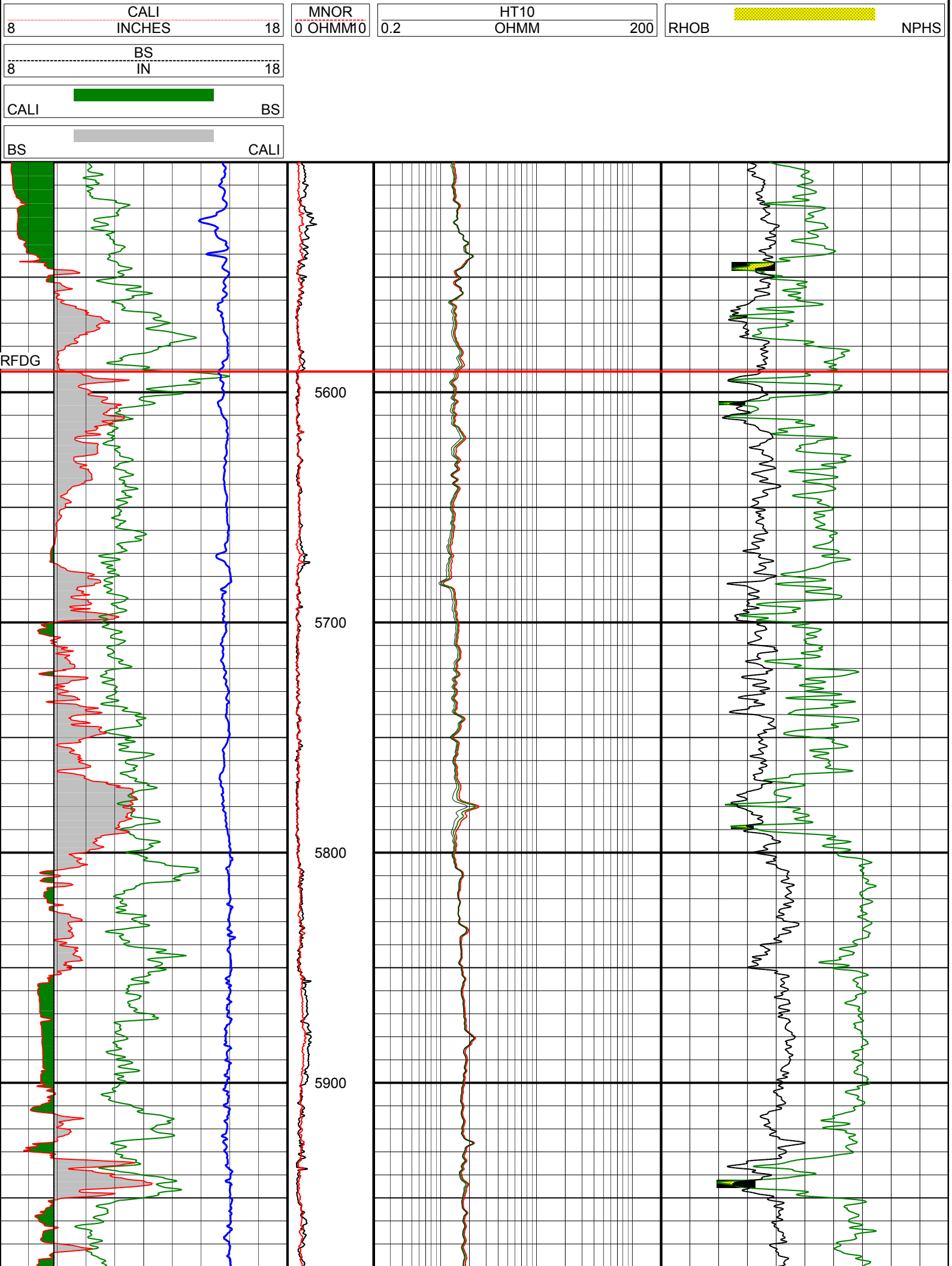
CALI
8 INCHES 18
MNOR
0 OHMM10
HT10
0.2 OHMM 200
RHOB NPHS
BS
8 IN 18
CALI BS
BS CALI
RFDG
5600
5700
5800
5900

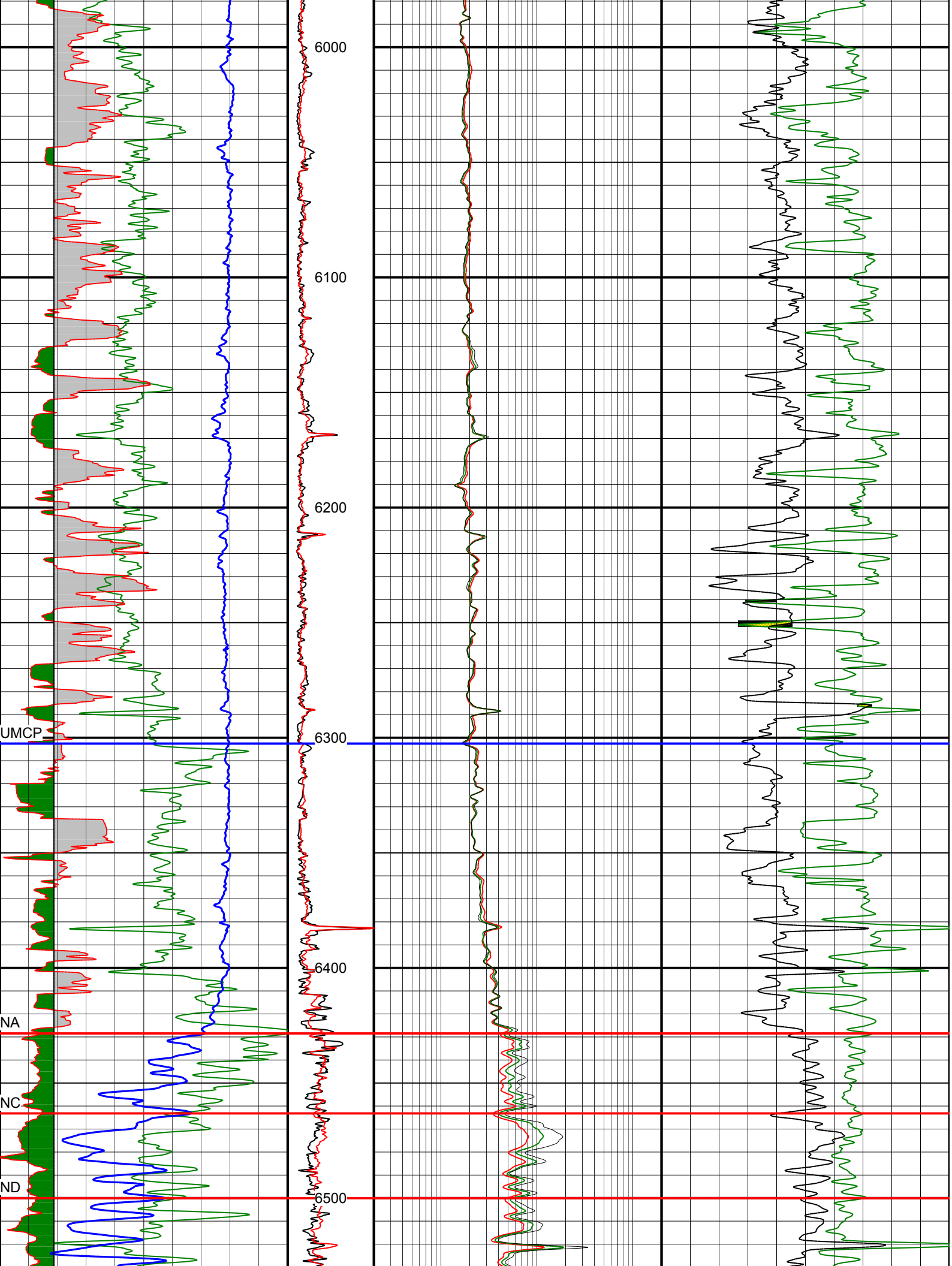
6000
6100
6200
UMCP
6300
6400
NA
NC
ND
6500

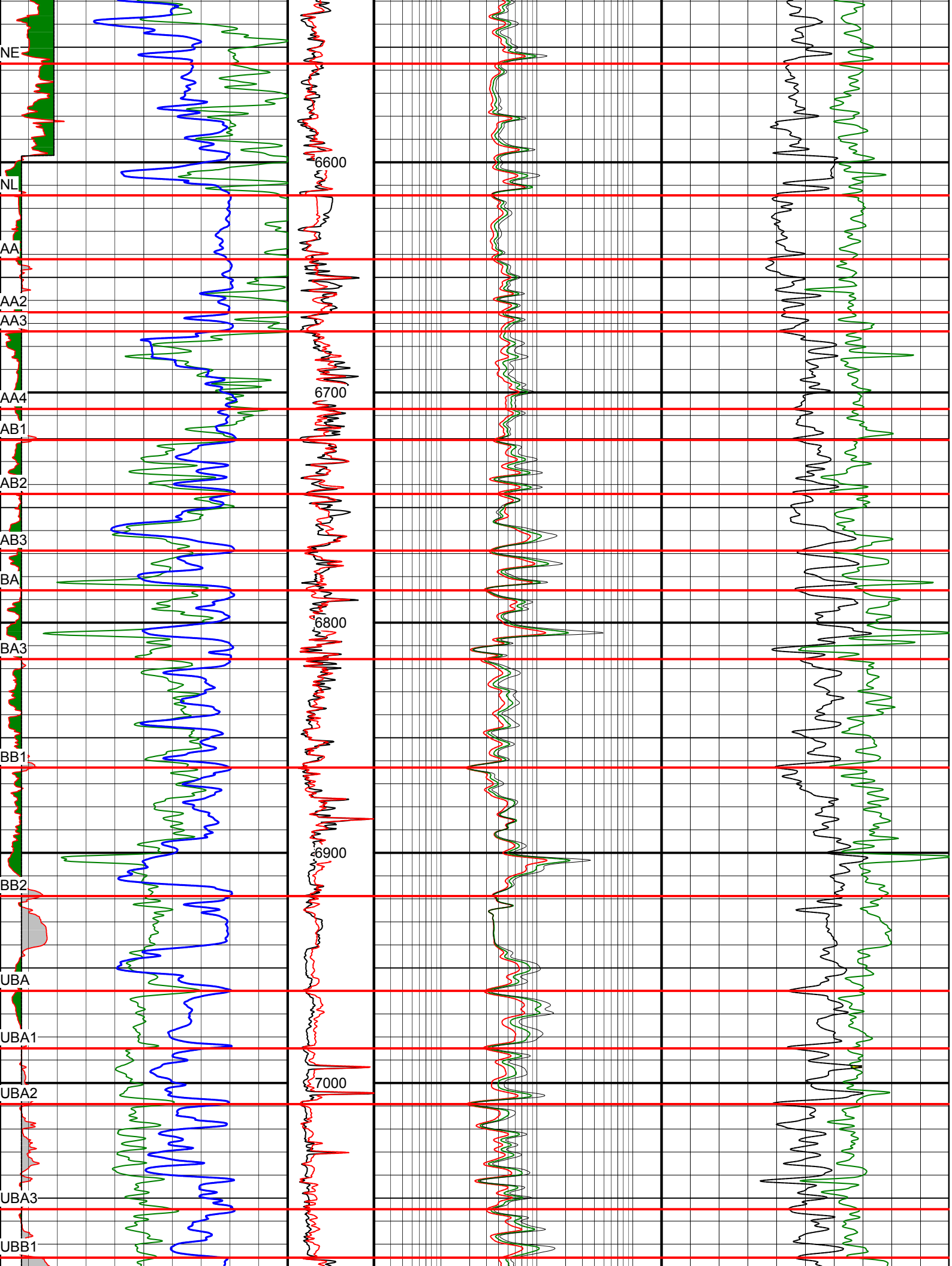
NE
NL
AA
AA2
AA3
AA4
AB1
AB2
AB3
BA
BA3
BB1
BB2
UBA
UBA1
UBA2
UBA3
UBB1
6600
6700
6800
6900
7000

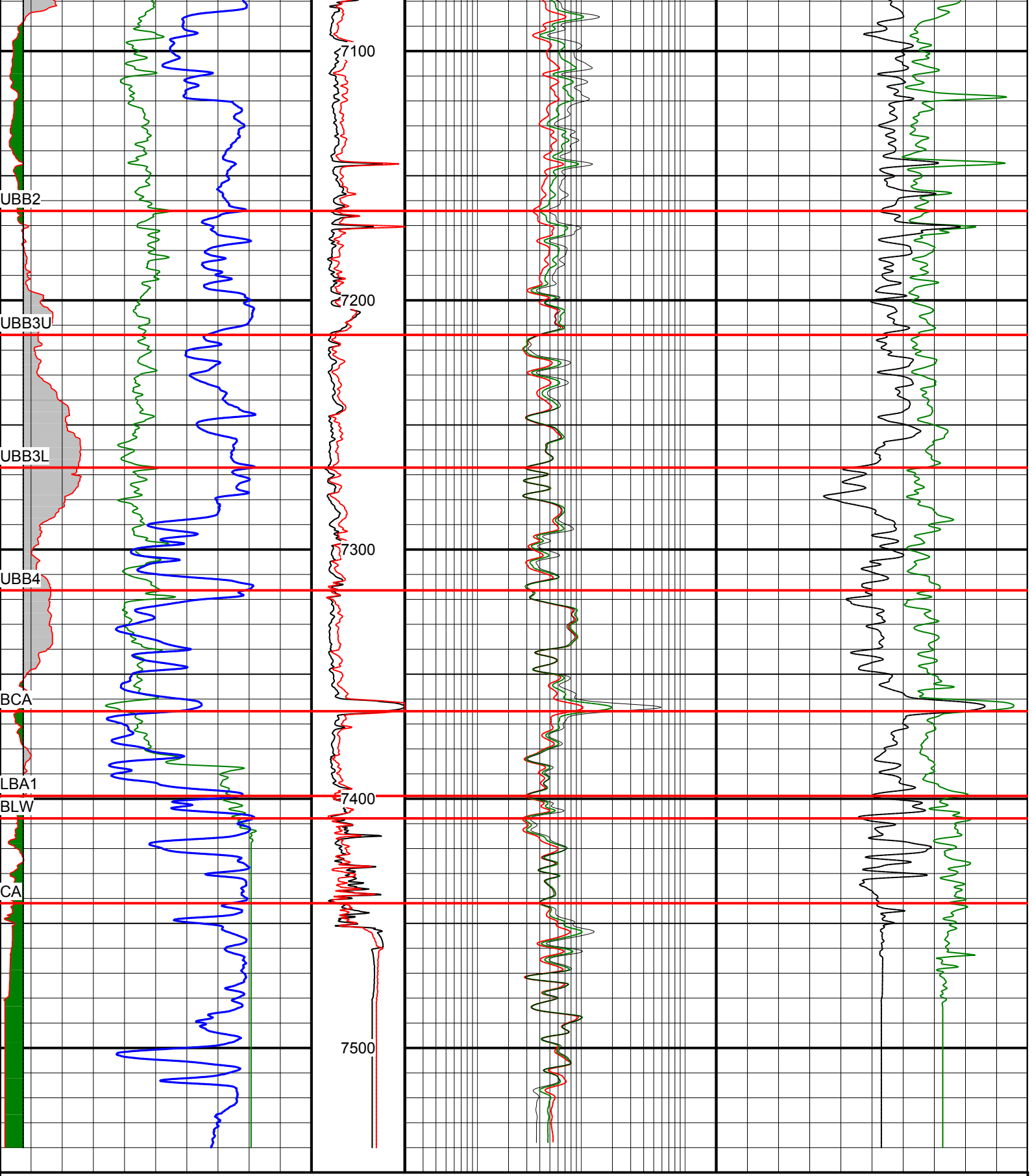

GR	DEPTH	HT90	RHOB
0 API 150	FT	0.2 OHMM 200	1.65 G/CM3 2.65
SPSTD	**MINV**	**HT30**	**NPHS**
-100 mv 0	0 OHMM10	0.2 OHMM 200	0.6 V/V DECI 0
CALI	**MNOR**	**HT10**	
8 INCHES 18	0 OHMM10	0.2 OHMM 200	RHOB NPHS
BS			
8 IN 18			

CALI BS

BS CALI

Charging of Elk Hills reservoirs as determined by oil geochemistry

John E. Zumberge, Judy A. Russell, and Stephen A. Reid

ABSTRACT

Crude oils from Miocene and Pliocene reservoirs from the Elk Hills field in California's San Joaquin basin were analyzed for stable carbon isotopes and biomarkers. Cluster analysis of geochemical variables defines five principal oil families, all derived from different organic-rich facies of the Miocene Monterey Formation. Carbon isotope analysis indicates no contribution from the basin's other major source rock, the Eocene Kreyenhagen Formation. Oil families show a strong correspondence to stratigraphic intervals. Oils from pre-Monterey reservoirs were probably generated from the lowermost organic-rich facies of the Monterey and are the most thermally mature. Upper Miocene Stevens zone turbidite reservoirs contain oils of various thermal-maturity stages, but mature light ends are abundant and are likely generated from the floors of the adjacent subbasins located north and south of Elk Hills. The relatively minor presence of low-thermal-maturity biomarkers that are typically characteristic of Monterey oils may indicate that Stevens traps did not form until after the source intervals were at a higher level of thermal maturity. All oils in Stevens porcelanite reservoirs contain a higher concentration of low-maturity biomarkers, which may indicate derivation from more localized areas on the flanks of the Elk Hills anticlines. The shallow Pliocene oils have suffered biodegradation to different degrees, and the lowest API gravities occur on the flanks of the anticline. The carbon isotopic composition of these oils suggests yet another Monterey source facies that charged the Pliocene reservoirs and is not simply the result of vertical leakage from the older Miocene reservoirs.

INTRODUCTION

Oils from California's San Joaquin basin are derived from Eocene and Miocene source intervals (Zieglar and Spotts, 1978; Kruge 1986; Peters et al., 1994; Kaplan, 2000). Expulsion and migration

AUTHORS

JOHN E. ZUMBERGE ~ *GeoMark Research, Ltd., 9748 Whithorn Drive, Houston, Texas 77095; jzumberge@geomarkresearch.com*

John E. Zumberge has been vice president and cofounder of GeoMark Research in Houston since 1991. He was manager of geochemical and geological research for Cities Service–Occidental, general manager for Ruska Laboratories, and director of geochemical services for Core Laboratories. He has global experience in petroleum geochemistry, focusing on crude-oil biomarkers. He obtained a B.S. degree in chemistry from the University of Michigan and a Ph.D. in organic geochemistry from the University of Arizona.

JUDY A. RUSSELL ~ *Occidental Oil and Gas Corporation, Suite 110, 5 Greenway Plaza, Houston, Texas 77046; judy_russell@oxy.com*

Judy A. Russell is a senior geological advisor for Occidental and works on worldwide exploration and production, with an emphasis on the integration of geochemistry. She has extensive experience in many of Occidental's projects in Latin America, Far East, the United States, and the Middle East. She has a B.S. degree from Phillips University and an M.S. degree from the New Mexico Institute of Mining and Technology.

STEPHEN A. REID ~ *Occidental Oil and Gas Corporation, Suite 110, 5 Greenway Plaza, Houston, Texas 77046; tony_reid@oxy.com*

Stephen Anthony Reid is a senior geological advisor for Occidental and works on international exploration, with an emphasis on deepwater projects. He has extensive experience in California's San Joaquin basin, including the Elk Hills field, where he conducted studies on Stevens turbidite and Monterey porcelanite reservoirs. He has B.S. and M.S. degrees from California State University, Northridge.

Copyright ©2005. The American Association of Petroleum Geologists. All rights reserved.

Manuscript received January 8, 2004; provisional acceptance June 8, 2004; revised manuscript received May 4, 2005; final acceptance May 10, 2005.

DOI:10.1306/05100504003

ACKNOWLEDGEMENTS

We thank the following for facilitating oil-sample collection and for providing helpful comments and suggestions: Bob Countryman, Wayland Gray, Ed Hanley, Bill Long, and Dal Payne. Mike Engel and Rick Maynard of the University of Oklahoma performed the carbon isotope analyses. We also thank Occidental of Elk Hills, Tupman, California, for permission to publish.

of oil from the deeper, thermally mature areas of the basin began in the Pliocene and is coincident with the initiation of deformation that forms many of the basin's structural traps. Other than the general relationship of oils to source rocks, little additional information has been published for the basin documenting specifics of expulsion timing, migration pathways, and filling (or charging) of traps. This study presents a detailed look at oils from the Elk Hills field and nearby fields and indicates that oil families differ by reservoir composition, depth, and location. These subtle distinctions reflect a complex expulsion and migration history at Elk Hills and provide clues on the timing of trap formation and the filling sequence of oil reservoirs.

This study presents geochemical data and interpretations for 66 oils from the Elk Hills field, San Joaquin Valley, California. Most of the samples are from turbidite sandstone and porcelanite reservoirs of the upper Miocene Monterey Formation. Pre-Monterey and Pliocene reservoirs are also incorporated. In addition, 10 oils from other southern San Joaquin fields, mostly from pre-Monterey reservoirs, were included for comparison. The purpose of this study is to determine the origin and potential migration pathways for Elk Hills oils, including those produced from the older reservoirs as well as the shallow Pliocene zones. Whether pre-Monterey source units are present in Elk Hills (e.g., Eocene Kreyenhagen or lower Miocene Temblor) is important, considering not only the deep potential in Elk Hills, but also other deep targets in the southern San Joaquin Valley.

Based only on a limited oil sample data set, Peters et al. (1994) distinguished San Joaquin oils derived from the Miocene Monterey and the Eocene Kreyenhagen source rocks using primarily stable carbon isotopic compositions. Typical of marine Miocene-derived oils worldwide, oils derived from the Monterey are isotopically heavy (more positive), whereas the Eocene oils are 4–5 ‰ lighter (more negative). These petroleum system assignments were confirmed by source rock analyses (Peters et al., 1994). With this limited data set, Peters et al. (1994) determined that Eocene oils are present in the northern San Joaquin basin and extend as far south as the Belgian Anticline field, which is located just to the west and northwest of Elk Hills (Figure 1). Oils in the central and southern San Joaquin basin are derived from Miocene source rocks.

In 1999, the first 15 oils from Elk Hills were analyzed for this study. Two of these oils were from pre-Monterey reservoirs (Temblor Formation) and differed in their biomarker chemistry (molecular fossils) from most of the oils produced from various Stevens sandstone units. The stable carbon isotopic composition of the C_{15+} fractions still indicated a Monterey source for these Temblor oils, at least for the heavy-oil fraction. These first studied Elk Hills oils were also compared to other Monterey oils from the Santa Maria, Santa Barbara Channel, and Los Angeles basins. The lower phosphatic and carbonate-rich facies of the Monterey generated much of the oil found in the Santa Maria and Los Angeles basins (e.g., Isaacs and Rullkötter, 2001), whereas Elk

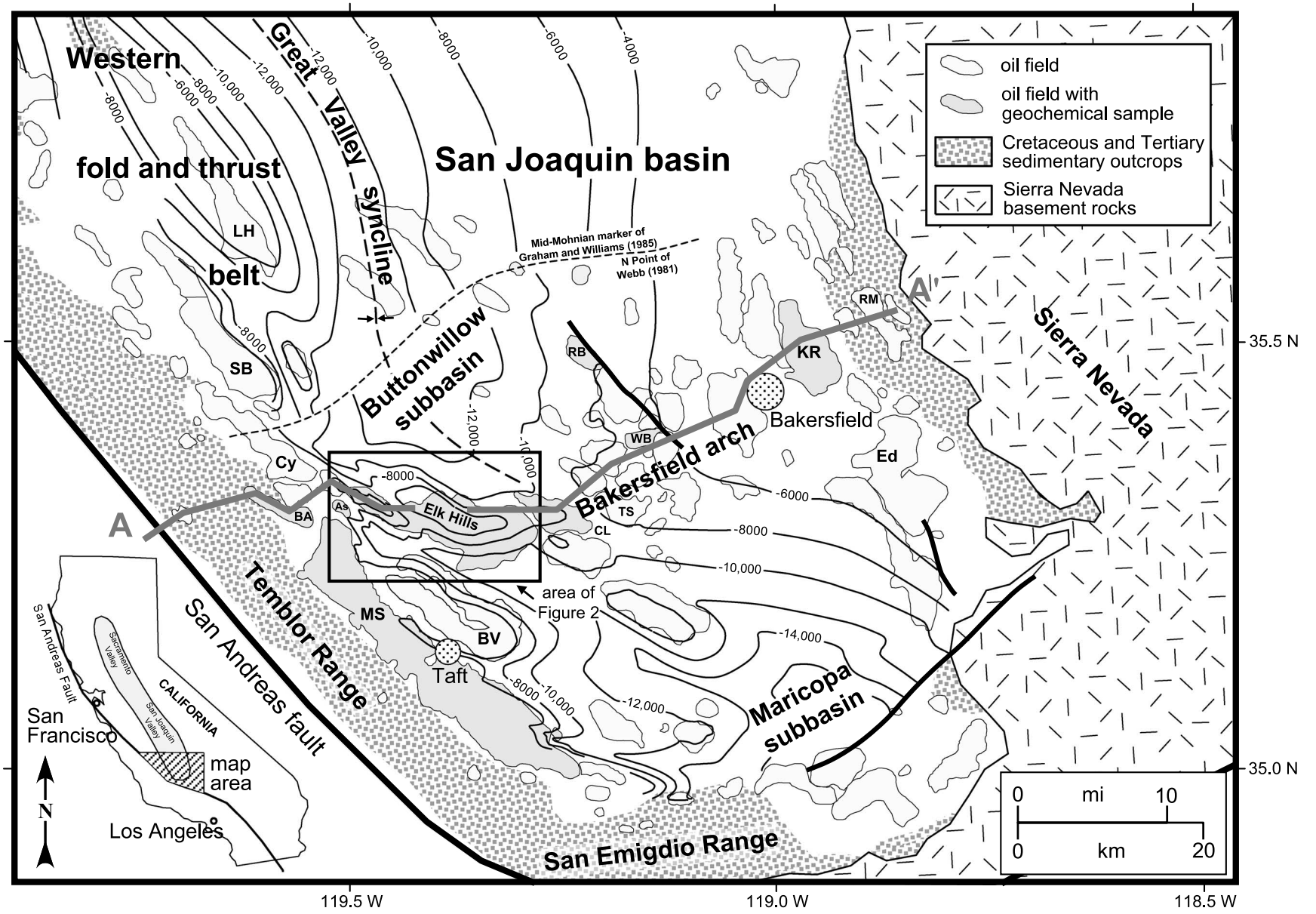

Figure 1. Index map of the southern San Joaquin basin, showing the major structural features and significant oil fields. Simplified structural contours are of Graham and Williams' (1985) mid-Mohnian marker and Webb's (1981) N Point. Key to field names: As = Asphalto; BA = Belgium Anticline; BV = Buena Vista; CL = Coles Levee; Cy = Cymric; Ed = Edison; KR = Kern River; LH = Lost Hills; MS = Midway-Sunset; RB = Rio Bravo; RM = Round Mountain; SB = South Belridge; TS = Ten Section; and WB = West Bellevue.

Hills Monterey oil biomarkers appear to originate primarily from more siliceous Monterey facies based on biomarker distributions. Subsequently, 51 additional Elk Hills oils were analyzed to include additional pre-Monterey reservoirs as well as porcelanite and shallow oil zone samples. Ten oils from other southern San Joaquin fields, including Eocene Kreyenhagen-derived oils, were also analyzed. The pedigrees of all oils are listed in Table 1.

REGIONAL GEOLOGIC SETTING, SOURCE ROCKS, AND RESERVOIRS

Elk Hills is located in the southern San Joaquin basin, about 40 mi (65 km) southwest of Bakersfield, California (Figure 1). The basin is a prolific hydrocarbon region and has produced more than 12 billion bbl oil and 3.5 tcf gas (California Division of Oil, Gas, and Geothermal Resources, 2003). The basin is asymmetrical along a north-south–trending axis (the Great Valley syncline) and is filled with sediments of late Mesozoic and Cenozoic age. On the east side of the basin, the basin fill thins as it onlaps Mesozoic igneous basement and forms a homoclinal limb that is locally broken by Miocene and Pliocene extensional faulting. The stratigraphic section thickens westward and is more than 25,000 ft (7620 m) thick west of the axis. The west side of the basin, which terminates at the San Andreas fault, is strongly deformed because of Pliocene to Holocene compression, and parts of the Cretaceous to Miocene section are exposed in outcrop. Several large anticlines, including Buena Vista, Belridge, and Lost Hills, are part of Bartow's (1991) western fold and thrust belt and formed during this period of compression. A broad northeast-trending basement ridge, the Bakersfield arch, divides the southern San Joaquin basin into the Maricopa and Buttonwillow subbasins. The Elk Hills field lies between the two subbasins southwest and along trend with the arch and merges westward into the western fold and thrust belt.

The principal petroleum source facies of the basin are the middle to upper Eocene Kreyenhagen Formation and the middle and upper Miocene Monterey Formation (Figure 2). The Kreyenhagen Formation is present in the subsurface throughout the Buttonwillow subbasin and extends at least as far south as Elk Hills and the Bakersfield arch. The Kreyenhagen consists of shale and siliceous shale and is up to 1000 ft (305 m) thick in the Buttonwillow subbasin (Church and Krammes, 1957; Villanueva and Kappeler, 1989). It was deposited under restricted marine conditions when the basin was partially closed along its western margin (T. H. Nilsen, S. A. Reid, D. R. D. Boote, 2005, personal communication). Along the west side of the basin, submarine-fan deposits of the Point of Rocks Sandstone Member are encased within the Kreyenhagen (Nilsen, 1987). Total Kreyenhagen and Point of Rocks thickness west of Elk Hills is about 6500 ft (2000 m) (Dunwoody, 1986) (Figure 3). Organic content is moderate to high (Kaplan, 2000) and consists of marine kerogen. The Kreyenhagen is a good source rock and is the source of oils in most of the fields in the northern Buttonwillow subbasin (Peters et al., 1994; Kaplan, 2000).

The Monterey Formation is present in the subsurface in the central and western areas of the Buttonwillow and Maricopa subbasins as well as across the Bakersfield arch. West of the basin axis and east of the outcrop belt, the formation is more than 5000 ft (1524 m) thick (Graham and Williams, 1985) (Figure 3). A complex lithologic suite is present that includes diatomite, porcelanite, siliceous shale, chert, clay-shale, and dolomite. In the Elk Hills area, the Monterey was deposited in a dynamic setting of evolving subsea structures in a deep-water setting (~2000–4000 ft; ~600–1200 m; Bandy and Arnal, 1969). Deposition of the Monterey occurred after the development of the San Andreas fault and the transformation of the San Joaquin basin from a convergent to a transform margin setting (Graham et al., 1989). By the late Miocene, wrench tectonism caused several San Joaquin structures to begin growing, including those at Buena Vista Hills, Elk Hills, and Lost Hills (Harding, 1976). Based on paleogeographic reconstructions by Graham (1978) and Graham et al. (1989) that include restoration of 165 mi (265 km) of post-Miocene offset on the San Andreas fault, emergent granitic basement of the Salinian block lay west of the basin and resulted in the basin's partial closure. The deep-marine setting became ideal for the preservation of organic-rich diatomaceous source rocks (Graham and Williams, 1985). Organic-rich shales collected in abundance in areas removed from coarse-grained deposition, including on the crests of the growing subsea anticlines. Thick turbidite sandstones, collectively referred to informally as the Stevens sand (and by numerous local names), are derived from highlands on the west, south, and east sides of the basin (MacPherson, 1978; Webb, 1981) and are interbedded within the Monterey, mostly in the upper half of the formation. Organic material from the Monterey Formation is established as the source of oil

in oil fields in the Maricopa and southern Buttonwillow basins (Peters et al., 1994; Kaplan, 2000).

Although the Miocene and Pliocene part of the stratigraphic section in the Elk Hills area and the central San Joaquin basin is composed primarily of mudstone, claystone, and siliceous shale, at five distinct time intervals, depositional systems brought reservoir-quality sands to the basin center (Figures 2, 3): (1) early Miocene western-sourced Santos and Carneros fans; (2) late Miocene eastern-derived Stevens submarine fan; (3) late Miocene western-derived Stevens turbidites; (4) early Pliocene Etchegoin–San Joaquin tidal system; and (5) late Pliocene Mya tidal channels (Reid, 1995).

The oldest and deepest reservoir sandstones are the Santos and Carneros sandstone members of the Temblor Formation. Both sandstones are submarine-fan deposits that are derived from highlands originally located west of the field but now positioned in the Santa Cruz area of coastal California, having been moved northward long the San Andreas fault system (Graham et al., 1989). Deeper sandstone units are present at Elk Hills, including the Eocene Point of Rocks Sandstone Member of the Kreyenhagen Formation, but have failed to produce commercial quantities of oil or gas.

The Monterey Formation contains several productive sandstone units of late Miocene age that are derived from highlands at the eastern and western margins of the basin. The Western 31S and Main Body B sandstones (W31S-MBB; Figure 2) are within the B unit of the Monterey and are part of the much larger Stevens submarine-fan system that extends across much of the Bakersfield arch, northern Maricopa subbasin, and southern Buttonwillow subbasin (MacPherson, 1978; Webb, 1981). The fan was the deep-water extension of the Kern River delta, which was the principal site of deposition of clastics derived from the southern Sierra Nevada. At Elk Hills, the western limit of the Stevens submarine fan falls about midway across the field.

Sands derived from smaller turbidite systems are present at Elk Hills in the A and N units of the Monterey (Figure 2). The 26R and 24Z sand bodies are derived from highlands once present west of Elk Hills but, because of right-lateral faulting on the San Andreas fault, are now located in the Gabilan Range in the central Coast Ranges (Graham, 1978). Both sand bodies were deposited in a slope setting that was disrupted by contemporaneous structural folding. The turbidite systems generally prograded northeastward, but were deflected by growing anticlines and were locally ponded in small synclinal basins before reaching the floor of the Buttonwillow subbasin (Webb, 1981; Reid, 1990). The result was the deposition of sand bodies along narrow and sinuous fairways in the western area of the field.

Intervals of porcelanite and chert are interbedded with and adjacent to the Stevens sandstone reservoirs. Porcelanite is a diagenetic product derived from deposits of diatom debris. The diagenetic process that forms porcelanite and chert begins with the burial of diatomite and the conversion of unstable amorphous opal (opal A) to cristobalite and tridymite (opal-CT) and, ultimately, to quartz and the formation of porcelaneous and cherty textures (see Isaacs, 1981, for a review of the process). Through this process, porosity is reduced, but even in the quartz phase, is still significant (average 20–25% at Elk Hills; Reid and McIntyre, 2001). Permeability improves during the transition from opal-CT to quartz because the mineral lining the walls of pore throats simplifies, resulting in reduced tortuosity (Reid and McIntyre, 2001; Schwalbach et al., 2001). The CT-quartz transition depth is affected by clay content but occurs at Elk Hills at about 4500 ft (1375 m) subsea.

Pliocene reservoirs of the Elk Hills area consist of sandstone units for the Etchegoin and San Joaquin formations that were deposited in shallow-marine, nearshore, and deltaic-channel environments and represent the final filling of the San Joaquin basin (Reid, 1995). The Calitroleum and Wilhelm sandstone units are poorly sorted, fine-grained sandstones deposited in a lower delta-front environment and are productive in the western area of the field. The Sub-Scalez-1 (SS-1) sandstone is the most significant of the Pliocene reservoirs and consists of coarse-grained sandstone deposited in tidal channels and tidal sand sheets and is present only in eastern Elk Hills. The shallowest and youngest of the Pliocene reservoirs, the Mya interval, consists of numerous narrow sandstone channels that cross the field in a north-south orientation. The Mya channels were deposited by deltas that prograded across the field at the end of the Pliocene.

ELK HILLS FIELD

At the depth of the Stevens reservoirs (~5000–10,000 ft; ~1500–3000 m subsea), the Elk Hills field contains three elongated domes with steep limbs: the 31S, 29R, and Northwest Stevens anticlines (Figure 4). The overall structural trend is northwest-southeast in the western part of the field and bend to east-west at the east side of the field. Major thrust faults

Table 1. List of Elk Hills Oils Analyzed with Corresponding Reservoir Formation, Age, and Depth as well as Family Designation*

Sample ID	Family**	Field	Well	Formation	Age	Depth (ft)	$<C_{15}$
CA230	SOZ	Elk Hills	37-35R	Wilhelm 1A, 1B	Pliocene	2794	37.6
CA231	SOZ	Elk Hills	153H-36R-RD2	CAL 1	Pliocene	4701	65.1
CA232	SOZ	Elk Hills	38H-31S	Gusher 4	Pliocene	2530	82.0
CA233	SOZ	Elk Hills	3-56-24Z	Sub Mulinia	Pliocene	2423	71.6
CA234	SOZ	Elk Hills	28-35R	Sub Mulinia	Pliocene	2530	46.0
CA235	SOZ	Elk Hills	86-24R	Sub Mulinia	Pliocene	2915	49.8
CA236	SOZ	Elk Hills	43-24Z	Wilhelm	Pliocene	2257	65.0
CA237	SOZ	Elk Hills	37-28R	Gusher 4	Pliocene	2999	60.2
CA238	SOZ	Elk Hills	34S-36R	CAL 2	Pliocene	4098	63.5
CA239	SOZ	Elk Hills	357XH-30S	Above bitumen (2)	Pliocene	2589	31.1
CA240	SOZ	Elk Hills	57-28R	Wilhelm 1A, 1B, 2	Pliocene	2387	67.0
CA258	SOZ	Elk Hills	312-31S	C4D-CT Phase	Pliocene	3692	58.5
CA260	SOZ	Elk Hills	376-24Z	Mid Reefridge-CT/Qtz	Upper Miocene–Pliocene	5145	50.4
CA197	SOZ	Elk Hills	58A-25R	Reef Ridge/C4D	Upper Miocene–Pliocene	3600	57.7
CA263	SOZ		35NE-6G				42.5
CA021	B1	Elk Hills	583L-30R	Lower Santos	Lower Miocene	9500	24.1
CA210	B1	Elk Hills	584-26Z	Carneros	Lower Miocene	8700	77.7
CA212	B1	Elk Hills	583L-30R	Santos	Lower Miocene		25.8
CA213	B1	Elk Hills	934H-29R RD4	Santos	Lower Miocene	9600	22.4
CA223	B1	Elk Hills	578-24Z	Carneros	Lower Miocene	9100	60.0
CA224	B1	Elk Hills	542-30R	Carneros	Lower Miocene	8500	59.9
CA015	B1+	Elk Hills	18-14Z	Temblor (+?)	Middle Miocene	8000	40.4
CA022	C	Elk Hills	362H-7R	Stevens NWS	Upper Miocene	9100	36.0
CA203	C	Elk Hills	331H-18R	A-1	Upper Miocene	9400	40.2
CA204	C	Elk Hills	373AH-7R	A-2	Upper Miocene	9160	33.7
CA205	C	Elk Hills	324H-7R	A1/A2	Upper Miocene	6100	58.3
CA206	C	Elk Hills	318-8R	A4/5	Upper Miocene	8900	31.8
CA011	A1	Elk Hills	372-17R	Stevens NWS	Upper Miocene	8900	41.8
CA016	A1	Elk Hills	362-24Z	Stevens 24Z	Upper Miocene	5800	42.4
CA017	A1	Elk Hills	362-16R	Stevens NWS	Upper Miocene	8600	41.9
CA025	A1	Elk Hills	312H-26R	Stevens 26R	Upper Miocene	6500	49.6
CA207	A1	Elk Hills	313H-16H	A5/6	Upper Miocene	8540	44.8
CA208	A1	Elk Hills	372-17R	A5/6	Upper Miocene	8850	43.9
CA214	A1	Elk Hills	324-15R	Stevens NWS (T3/4)	Upper Miocene	8800	50.8
CA215	A1	Elk Hills	334-15R	Stevens NWS (T3/4)	Upper Miocene	8800	47.8
CA217	A1	Elk Hills	328-35R-RD1	Stevens 2B	Upper Miocene	6300	53.5
CA218	A1	Elk Hills	317X-13Z	Stevens N Shale	Upper Miocene	5500	44.7
CA198	A2	Elk Hills	381-36S	UMBB	Upper Miocene	8600	98.3
CA199	A2	Elk Hills	383H-36S RD2	UMBB	Upper Miocene	8750	42.0
CA200	A2	Elk Hills	333-35S	UMBB	Upper Miocene	7350	44.8
CA202	A2	Elk Hills	315-35S	UMBB	Upper Miocene	7000	45.0
CA209	A2	Elk Hills	384H-25R	NA/ND	Upper Miocene	5250	58.4
CA216	A2	Elk Hills	346-35R	Stevens 2B	Upper Miocene	6500	48.7
CA219	A2	Elk Hills	383-26Z	Stevens	Upper Miocene	5500	38.9
CA220	A2	Elk Hills	352-26Z	Stevens	Upper Miocene	5800	32.4
CA012	SH	Elk Hills	361-25S	Stevens MBB	Upper Miocene	9700	40.4
CA013	SH	Elk Hills	343-29R	Stevens D Shale	Middle Miocene	6000	42.2
CA014	SH	Elk Hills	324-4G	Stevens A	Upper Miocene	6400	44.1

API	% S	Ni/V	% Sat	% Aro	% Asph	S/A	$^{13}C_s$†	$^{13}C_a$†	$^{13}C_{wo}$†	^{13}C LE††	^{13}C HE††
27.2	1.12	4.5	28.4	38.7	3.5	0.73	−25.12	−24.37	−24.27	−23.75	−24.58
39.1	0.68	4.3	30.7	35.1	5.2	0.87	−25.40	−24.43	−24.10	−23.76	−24.73
48.2	0.40	1.8	33.0	34.0	5.7	0.97	−25.24	−24.68	−23.85	−23.63	−24.86
36.4	0.58	2.6	30.6	37.5	5.5	0.82	−25.27	−24.43	−24.13	−23.91	−24.69
28.1	1.04	4.7	28.3	39.4	3.1	0.72	−25.18	−24.34	−24.04	−23.41	−24.58
15.8	0.80	3.1	24.0	41.9	6.1	0.57	−24.97	−24.34	−24.09	−23.69	−24.49
39.4	0.72	4.9	32.3	35.5	2.9	0.91	−25.26	−24.50	−24.13	−23.80	−24.75
36.7	0.84	3.8	31.7	34.9	4.3	0.91	−25.49	−24.53	−24.29	−23.93	−24.83
39.0	0.65	3.6	31.8	35.1	6.4	0.91	−25.35	−24.33	−24.03	−23.67	−24.65
14.3	1.10	5.0	27.6	38.0	4.5	0.73	−25.24	−24.41	−24.30	−23.55	−24.64
38.1	0.69	3.7	30.4	35.1	3.2	0.87	−25.46	−24.41	−24.18	−23.91	−24.73
36.3	0.73	2.1	33.1	38.6	3.3	0.86	−25.55	−24.45	−24.26	−23.87	−24.81
35.5	0.91	2.3	32.9	38.7	2.1	0.85	−25.19	−24.39	−24.07	−23.50	−24.65
38.6	0.74	5.8	33.3	38.4	2.1	0.87	−25.41	−24.30			−24.67
28.8	1.04	4.8	26.0	39.6	4.8	0.66	−25.14	−24.32	−24.22	−23.80	−24.53
27.6	0.48	3.2	34.2	39.2	5.6	0.87	−24.62	−23.56	−24.04	−24.41	−23.92
50.0	0.20	3.5	45.7	35.7	1.9	1.28	−24.82	−23.68	−23.53	−23.34	−24.20
27.6	0.45	3.3	31.6	39.2	7.1	0.81	−24.68	−23.56	−23.76	−23.32	−23.91
	0.65	2.8	7.5	11.4	28.9	0.66	−24.13	−23.12	−23.27	−23.53	−23.20
35.9	0.34	5.0	40.6	36.6	6.6	1.11	−24.95	−23.64	−23.84	−23.62	−24.17
36.3	0.32	7.8	41.8	35.1	5.9	1.19	−25.11	−23.65	−23.84	−23.56	−24.26
35.2	0.92	1.8	38.8	33.8	4.2	1.15	−25.11	−23.82	−24.10	−23.77	−24.32
37.7	1.51	1.0	29.6	38.9	5.7	0.76	−24.96	−23.63	−23.58	−23.33	−24.02
26.7	1.39	0.5	24.5	38.8	15.5	0.63	−24.87	−23.57	−23.54	−23.31	−23.89
14.0	0.65	0.3	22.2	33.1	22.5	0.67	−24.94	−23.52	−23.25	−22.95	−23.84
24.5	0.79	0.4	25.5	37.6	12.4	0.68	−24.98	−23.62	−23.59	−23.06	−23.97
	1.00	0.7	33.1	38.5	8.6	0.86	−24.54	−23.24	−23.32	−23.16	−23.67
35.4	0.70	0.3	39.6	33.1	3.8	1.20	−24.15	−22.78	−23.04	−22.65	−23.32
35.0	0.68	0.6	50.9	31.4	1.7	1.62	−24.75	−23.12	−23.45	−22.77	−23.95
36.8	0.53	0.3	38.3	33.4	6.3	1.15	−24.38	−23.08	−23.22	−22.72	−23.58
40.8	0.62	0.6	40.5	35.3	7.0	1.15	−24.28	−23.12	−23.34	−23.09	−23.59
33.4	0.59	0.7	43.4	36.5	4.2	1.19	−24.02	−22.78	−22.98	−22.56	−23.32
34.8	0.71	0.6	41.4	37.0	4.7	1.12	−24.14	−22.80	−23.02	−22.59	−23.35
38.0	0.43	5.3	47.5	32.0	5.4	1.48	−24.14	−22.76	−23.21	−23.01	−23.42
33.1	0.54	0.4	43.7	34.9	4.1	1.25	−24.20	−22.84	−23.13	−22.80	−23.43
38.1	0.41	16.0	49.5	30.8	1.3	1.61	−24.49	−23.15	−23.55	−23.32	−23.81
30.8	1.17	2.2	32.1	34.0	5.8	0.94	−24.65	−23.59	−23.57	−23.12	−23.93
60	0.02	1.8	40.4	35.9	0.0	1.13	−24.73	−23.54	−20.28	−20.22	−24.02
33.5	0.68	1.8	39.4	37.3	4.0	1.06	−24.79	−23.45	−23.84	−23.65	−23.98
33.0	0.62	1.4	42.5	35.5	3.3	1.20	−24.74	−23.35	−23.71	−23.43	−23.94
34.0	0.47	1.9	44.8	36.0	3.2	1.24	−24.61	−23.31	−23.70	−23.46	−23.89
39.7	0.65	4.4	38.8	33.0	2.2	1.18	−25.04	−23.97	−23.91	−23.57	−24.39
32.8	0.49	13.5	42.2	35.2	5.2	1.20	−24.48	−23.30	−23.54	−23.27	−23.80
32.9	0.64	2.6	41.6	34.6	3.0	1.20	−24.47	−23.39	−23.56	−23.12	−23.84
30.6	0.76	0.9	43.4	32.4	3.3	1.34	−24.45	−23.29	−23.62	−23.26	−23.79
32.7	0.73	1.1	32.9	35.2	4.7	0.93	−24.69	−23.36	−23.41	−22.84	−23.80
38.4	0.48	0.8	46.1	31.4	3.7	1.47	−24.47	−23.18	−23.99	−24.28	−23.77
39.0	0.49	1.0	48.3	34.1	1.4	1.42	−24.93	−23.36	−23.67	−23.10	−24.12

Table 1. Continued

Sample ID	Family**	Field	Well	Formation	Age	Depth (ft)	$<C_{15}$
CA018	SH	Elk Hills	347-33S	Stevens MBB	Upper Miocene	6600	45.8
CA019	SH	Elk Hills	388-28R	Stevens B	Upper Miocene	6500	46.4
CA020	SH	Elk Hills	337HA-33S	Stevens MBB	Upper Miocene	6600	45.5
CA023	SH	Elk Hills	325H-30S	Stevens D Shale	Middle Miocene	6900	52.4
CA024	SH	Elk Hills	348A-23R	Stevens W.31S	Upper Miocene	6400	45.9
CA201	SH	Elk Hills	347-35S	UMBB	Upper Miocene	7300	55.8
CA246	SH	Elk Hills	322H-32S	A-Sand	Upper Miocene	5094	50.8
CA247	SH	Elk Hills	371X-32R	N-CT Phase	Upper Miocene	5457	45.8
CA248	SH	Elk Hills	314-5G	N-Qtz Phase	Upper Miocene	6345	48.4
CA249	SH	Elk Hills	326-19R	N-Qtz Phase	Upper Miocene	5690	51.6
CA250	SH	Elk Hills	326-29R	N-Qtz Phase	Upper Miocene	5600	46.8
CA251	SH	Elk Hills	382H-5G	A-Sand	Upper Miocene	6306	48.8
CA252	SH	Elk Hills	314-3G	N-Qtz Phase	Upper Miocene	6660	44.8
CA253	SH	Elk Hills	368H-19R	N-CT Phase	Upper Miocene	5250	47.1
CA254	SH	Elk Hills	357-35S	N-Qtz Phase	Upper Miocene	5695	67.7
CA255	SH	Elk Hills	386XH-33S	A-Sand	Upper Miocene	6849	46.0
CA256	SH	Elk Hills	321XH-33R	B-Qtz Phase	Upper Miocene	5398	45.0
CA257	SH	Elk Hills	382-25Z	Olig/C4D-CT?	Upper Miocene	4910	49.7
CA259	SH	Elk Hills	325-28R	B-Qtz Phase	Upper Miocene	5550	48.5
CA225	KH	Kettleman N. Dome	E72-33J	Kreyenhagen	Eocene	9400	47.1
CA226	KH	Kettleman N. Dome	341-11P	Kreyenhagen	Eocene	8850	47.5
CA228	KH	Belgian Anticline	75-17Y	Point of Rocks III	Eocene	2300	86.3
CA227	~A1	West Bellevue	Lovegren 62X-32	Lower Stevens	Miocene	8815	39.9
CA229	High mat.	Ekho	1	Temblor	Oligocene	18,015	63.9
CA221	Biodeg.	Deer Creek	Community lease		Miocene	800	7.2
CA245	Biodeg.	Midway-Sunset					41.3
OXCA001	~SOZ	Kern River	Apollo-CP-Revenue	Vedder Sands	Oligocene	4800	44.1
OXCA002	~B1	Rio Bravo	Mandell 2 (RD1)	Freeman-Jewette Fm.	Miocene	11,260	47.1
OXCA003	~SOZ	Kern River	Revenue 4X	Vedder Sands	Oligocene	4700	43.7

*Column definitions: $<C_{15}$ = % less than C_{15} (light ends); S/A = C_{15+} saturated hydrocarbons/C_{15+} aromatic hydrocarbons; $^{13}C_s$ = carbon isotope composition of C_{15+} saturated hydrocarbons; $^{13}C_a$ = carbon isotope composition of C_{15+} aromatic hydrocarbons; $^{13}C_{wo}$ = carbon isotope composition of whole oil; ^{13}C LE = calculated carbon isotope composition of light-end components; ^{13}C HE = calculated carbon isotope composition of heavy ends.

**For explanation see text section titled Oil Families Description.

†Measured.

††Calculated.

are present on the flanks of all the anticlines and generally parallel to the fold axes (Imperato, 1995; Fiore et al., 2004). Most thrust faults terminate upward in the thick shale sequence that separates the Monterey and Etchegoin reservoirs. At the depth of the Pliocene sandstone section (about 2000–5000 ft [600–1500 m] subsea), the 29R and 31S anticlines merge to form a single large structure that generally has an east-west trend. The Northwest Stevens anticline did not have significant activity following the end of the Miocene and does not make a major contribution to the Pliocene structure. The Pliocene section in eastern Elk Hills is broken by numerous northeast-southwest–trending normal faults. The Elk Hills anticlinal complex is most likely a fault propagation fold formed by north- and northeast-directed compression (Imperato, 1995; Fiore et al., 2004). Like many of the west-side anticlines, folding began at Elk Hills in late Miocene, accelerated in the Pliocene, and continues today (Harding, 1976).

Elk Hills has produced more than 1.2 billion bbl oil and 1.6 tcf gas (California Division of Oil, Gas, and Geothermal Resources, 2003) from four petroleum zones. The Carneros zone includes the Santos

API	% S	Ni/V	% Sat	% Aro	% Asph	S/A	$^{13}C_s$†	$^{13}C_a$†	$^{13}C_{wo}$†	^{13}C LE††	^{13}C HE††
38.5	0.42	0.9	46.7	33.8	2.1	1.38	−24.57	−23.30	−23.70	−23.47	−23.89
37.7	0.40	0.8	49.5	30.4	1.8	1.63	−24.35	−23.08	−23.55	−23.37	−23.71
39.2	0.39	1.0	47.7	32.0	1.8	1.49	−24.55	−23.26	−23.71	−23.51	−23.88
33.6	0.44	1.6	45.1	32.9	2.4	1.37	−24.77	−23.50	−24.00	−23.93	−24.07
38.8	0.42	0.9	48.9	32.0	2.8	1.53	−24.43	−23.18	−23.61	−23.40	−23.79
21.1	0.47	1.7	24.2	25.8	8.7	0.94	−24.71	−23.41	−23.80	−23.86	−23.72
34.5	0.78	1.8	37.0	36.7	3.3	1.01	−24.95	−23.83	−23.97	−23.70	−24.24
30.6	0.54	1.6	45.6	35.7	2.8	1.28	−24.53	−23.30	−23.67	−23.44	−23.86
36.0	0.61	1.7	41.6	37.5	3.0	1.11	−24.66	−23.36	−23.67	−23.42	−23.90
37.7	0.52	1.4	43.4	34.7	3.3	1.25	−24.53	−23.38	−23.64	−23.42	−23.88
37.8	0.56	1.6	44.5	33.8	2.5	1.32	−24.49	−23.28	−23.63	−23.42	−23.82
37.7	0.55	1.4	44.6	35.7	2.9	1.25	−24.63	−23.49	−23.77	−23.53	−24.00
34.2	0.92	1.8	32.2	36.7	6.2	0.88	−24.62	−23.42	−23.41	−22.92	−23.81
36.0	0.70	1.5	41.3	33.7	3.1	1.23	−24.57	−23.54	−23.70	−23.40	−23.97
40.9	0.40	1.4	46.8	30.0	9.8	1.56	−24.60	−23.50	−23.50	−23.25	−24.01
35.1	0.47	1.4	49.5	33.8	2.6	1.46	−24.83	−23.35	−23.69	−23.23	−24.08
34.2	0.46	1.0	47.5	34.2	2.3	1.39	−24.41	−23.15	−23.53	−23.26	−23.75
36.3	0.79	1.8	38.4	37.5	1.9	1.02	−24.91	−23.87	−23.85	−23.42	−24.27
36.9	0.44	1.0	49.4	34.6	1.9	1.43	−24.47	−23.22	−23.58	−23.31	−23.84
36.6	0.39	3.2	45.7	37.0	1.6	1.23	−29.07	−28.19	−28.64	−28.68	−28.59
37.8	0.37	3.8	45.6	37.3	1.8	1.22	−28.83	−27.94	−28.45	−28.54	−28.35
41.7	0.06	9.0	51.2	36.8	0.0	1.39	−28.03	−25.97	−26.56	−23.64	−27.02
35.7	0.72	1.9	42.8	35.4	3.9	1.21	−24.64	−23.45	−23.82	−23.73	−23.96
37.7	0.19	3.0	50.5	38.0	0.3	1.33	−23.75	−22.40	−23.19	−23.38	−23.08
13.0	0.43	3.5	43.3	41.5	0.9	1.04	−26.49	−25.55	−25.94	−25.94	−25.96
13.9	0.92	0.8	16.0	35.8	6.9	0.45	−24.44	−23.52			−23.67
30.2	0.70	5.7	39.8	36.8	6.0	1.08	−25.08	−23.64	−23.70	−23.30	−24.21
35.1	0.33	5.5	46.5	37.6	2.7	1.24	−24.67	−23.47	−23.96	−23.88	−24.03
31.9	0.71	9.2	40.0	36.6	6.1	1.09	−25.02	−23.61	−23.78	−23.47	−24.17

and Carneros sandstones and contains light-gravity oil, condensate, and gas and is productive only on the 29R anticline at depths of about 10,000 ft (3048 m). The Stevens oil zone contains several major pools in structural and stratigraphic traps on each of the large anticlines. Drill depth of pools ranges from 5000 to 10,000 ft (1500 to 3000 m), with many wells completed in oil columns originally 500–1000 ft (152–305 m) thick. Produced oil from all Stevens pools averages 35° API, with abundant associated produced gas. The shallow oil zone produces from drill depths of 2000–4000 ft (610–1220 m) and produces light-gravity oil and gas from the Calitroleum and Wilhelm reservoirs in western Elk Hills and 25–30° API oil in the SS-1 reservoir on the east side of the field. The dry gas zone, as its name implies, produces only methane from the Pliocene Mya interval at drill depths of 1000–2000 ft (305–610 m).

EXPERIMENTAL METHODS

Standard laboratory procedures were followed in obtaining the geochemical results used in the multivariate statistical analysis and are summarized here.

The weight of the light ends lost from each oil sample under a stream of nitrogen was determined gravimetrically ($<C_{15+}$). The amount of asphaltenes was measured by precipitation using n-hexane (overnight at room temperature). The C_{15+} deasphalted fractions were separated into saturated hydrocarbon, aromatic hydrocarbon, and nitrogen-sulfur-oxygen compounds or resin fractions using gravity-flow column chromatography employing a 100–200 mesh silica gel support activated at 400°C prior to use. Hexane was used to elute the saturated hydrocarbons; dichloromethane was used to elute the aromatic hydrocarbons; and dichloromethane/methanol (50:50) was used to elute the nitrogen-sulfur-oxygen fraction. Following solvent

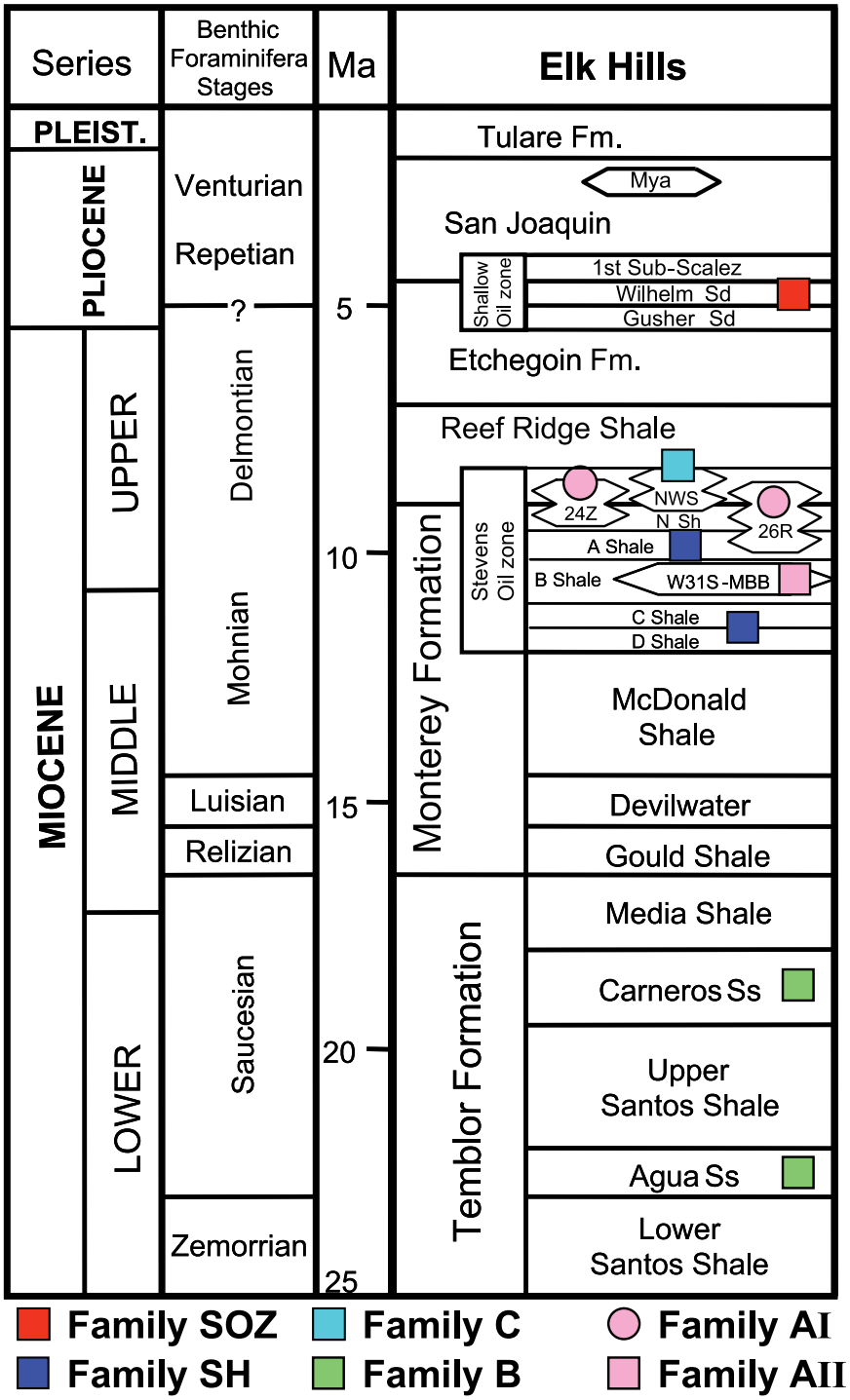

Figure 2. Stratigraphic section and oil families at Elk Hills. For explanation of oil families, see text section titled Oil Families Description.

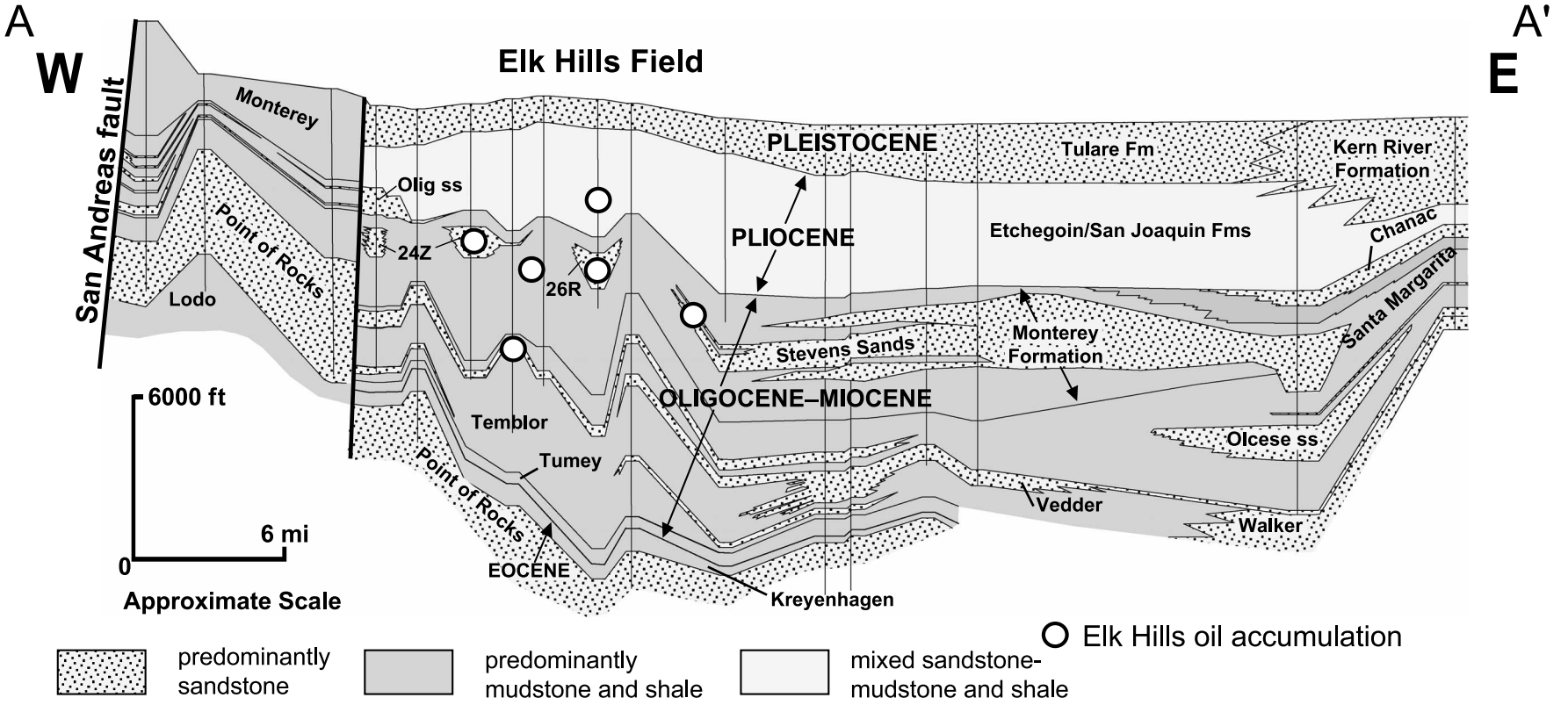

Figure 3. Cross section of the southern San Joaquin basin from the San Andreas fault through Elk Hills to the Sierra Nevada. Modified from Dunwoody (1986).

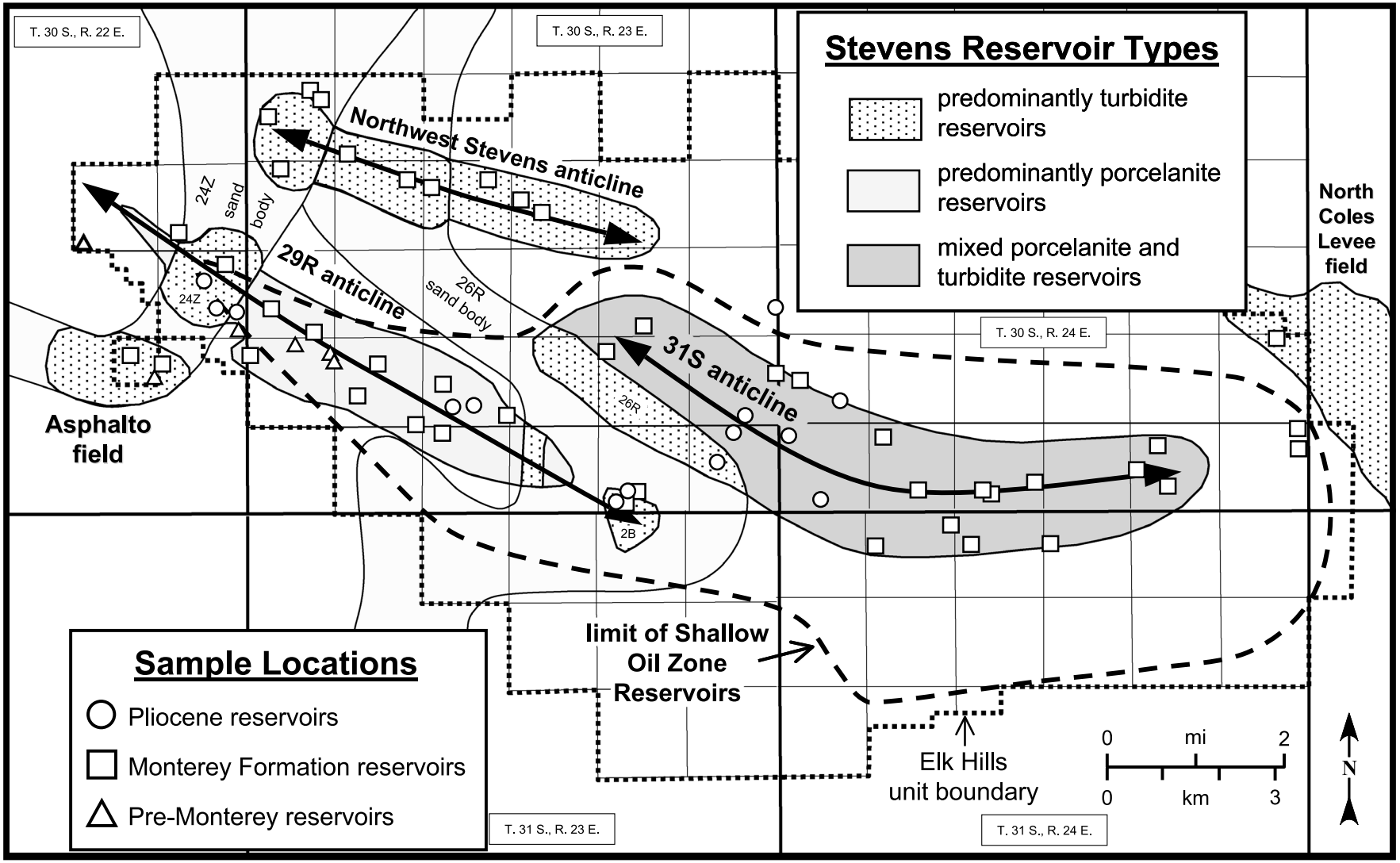

Figure 4. Detailed map of the Elk Hills field showing location of geochemical samples, location of the major Stevens reservoirs, and a general outline of the shallow oil zone. Some samples are from minor reservoirs that have unmapped aerial distributions.

evaporation, the recovered fractions were quantified gravimetrically. The C_{15+} saturated hydrocarbon fraction was subjected to molecular sieve filtration (Union Carbide S-115 powder) after the technique described by West et al. (1990) to concentrate the branched and cyclic biomarker fractions. Stable carbon isotopic compositions of the whole oil as well as the C_{15+} saturated and aromatic hydrocarbon fractions were determined using the combustion technique of Sofer (1980) and a Finnigan delta E isotope ratio mass spectrometer. Results are reported relative to the Peedee belemnite standard.

Whole crude oils were injected (split mode 70:1) on a 30-m × 0.32-mm (100-ft × 0.012-in.) J&W DB-5 column (0.2-μm film thickness) and temperature programmed from −60 to 350°C at 12°C/min using a Hewlett Packard 5890 gas chromatograph. Helium was used as the carrier gas. Gas chromatographic and mass spectrometric analyses of C_{15+} branched/cyclic and aromatic hydrocarbon fractions (to determine sterane and terpane biomarker distributions and quantities) were performed using a Hewlett Packard 5890 gas chromatograph (split injection) interfaced to a HP 5971 mass spectrometer. The HP-2 column (50 m × 0.2 mm [164 ft × 0.0078 in.]; 0.11-μm film thickness) was temperature programmed from 150 to 325°C at 2°C/min for branched and cyclic hydrocarbons and 100 to 325°C at 3°C/min for aromatics. The mass spectrometer was run in the selected ion mode, monitoring ion mass-to-charge ratio (*m/z*) 177, 191, 205, 217, 218, 221, 231, and 259 (branched/cyclic) and *m/z* 133, 178, 184, 192, 198, 231, 245, and 253 (aromatics). To determine absolute concentrations of individual biomarkers, a deuterated internal standard (d4-C29 20R sterane; Chiron Laboratories, Norway) was added to the C_{15+} branched and cyclic hydrocarbon fraction. Response factors (RF) were determined by comparing the mass spectral response at *m/z* 221 for the deuterated standard to hopane (*m/z* 191) and sterane (*m/z* 217) authentic standards. These response factors were found to be approximately 1.4 for terpanes and 1.0 for steranes. Concentrations of individual biomarkers in the branched and cyclic fraction were determined using the following equation:

$$\begin{aligned}&\text{Concentration(ppm)}\\&=[(\text{peak height of biomarker})(\text{nanograms of standard})]\\&\quad/[(\text{peak height of standard})(\text{RF})\\&\quad\times(\text{milligrams of branched and cyclic fraction})]\end{aligned}$$

OIL FAMILIES DESCRIPTION

Table 1 lists the Elk Hills wells that produced the 66 oils used in this study and provides reservoir identification and depth, as well as bulk properties such as API gravity and stable carbon isotope compositions. Figure 4 shows a map locating the samples, highlighting the Elk Hills oils from pre-Monterey reservoirs (7 samples) as well as 14 samples from the Pliocene shallow oil zone. A total of 32 samples come from the various Stevens turbidites, and 13 samples are from porcelanite reservoirs (Elk Hills Shale Member of the Monterey Formation). The Elk Hills samples are evenly distributed between the two main producing anticlines: 31S (eastern Elk Hills) and 29R (western Elk Hills), with 10 oils from the Northwest Stevens anticline. Complete analytical results of all the oils used in this study, including whole oil chromatograms and terpane and sterane biomarker distributions and concentrations, can be accessed from the GeoMark Research Reservoir Fluid Database (www.RFDbase.com) using the demo-user password.

Also shown in Table 1 are the results of the oil classification or groupings (oil families), which will be described in detail below. Family member oils generally share a common source organofacies, albeit at different levels of thermal maturity. Most remarkably, Elk Hills oil families strongly correlate to reservoir horizon (see stratigraphic section, Figure 2), although all Elk Hills oils were generated from the Monterey, even family B oils that produce from pre-Monterey horizons.

Statistical Analyses

The two statistical treatments used in the present study to delineate the different oil families are termed principal component analysis and hierarchical cluster analysis and were performed using computer programs from Infometrix (Pirouette™). In principal component analysis, new independent variables are created (i.e., principal components) that are linear combinations of the original variables (i.e., geochemical parameters). The primary objective of the principal component analysis is to reduce the dimensionality of the data to a few important components that best explain the variation in the data. Oil samples can be plotted in a principal component space, for example, PC1 (factor 1) versus PC2 (factor 2), like any other *x-y* plot. This is called a scores plot. The geochemical variables

responsible for the PC axes can be viewed as a loadings plot. Hierarchical cluster analysis is an ancillary technique to principal component analysis where a distance matrix is created from the scaled data. A resulting dendrogram is the output of a cluster analysis and shows groups or clusters of related oils. The distance between any two samples on a hierarchical cluster analysis is a measure of their similarity. (This distance is similar to a linear correlation coefficient; perfect correlation would have a value of 1.0, whereas poor correlation would have values less than 0.5.)

The geochemical variables used to correlate oils are various source-dependent biomarker ratios and stable carbon isotopic compositions. Biomarkers (biological markers) are geochemical fossils and are defined as organic compounds found in sedimentary rocks or oils in which a sufficient part of the carbon skeleton has been preserved. These compounds, including terpanes and steranes, can be correlated with the original biochemical precursor after having undergone accumulation, diagenesis, and catagenesis (i.e., oil generation). Thus, biomarkers can be indicators of source rock depositional environments in the same manner that the physical remains of organisms can describe depositional systems. Biomarkers are also useful as thermal-maturity indicators. A good review of biomarkers and their applications in petroleum geochemistry can be found in Peters et al. (2005).

The level of statistical correlation between the 66 oils included in the Elk Hills data set is shown in the hierarchical cluster analysis dendrogram presented in Figure 5. Eighteen isotope and biomarker variables (identified in Figure 6) were used to construct the cluster analysis dendrogram. Five compositional clusters are identified on the dendrogram:

family A: Stevens turbidites; includes closely related subfamilies AI and AII
family B: oils in pre-Monterey reservoirs
family C: limited to the Stevens zone in the 7R area of the Northwest Stevens anticline
family SH: oils from the Stevens porcelanite reservoirs
family SOZ: oils from the Pliocene shallow oil zone

The analytical variation in the data set is minimal. For example, oil samples CA011 and CA208 (well 372-17R; family AI) as well as CA021 and CA212 (well 583L-30R; family B) represent duplicate pairs. Although samples CA208 and CA212 were analyzed 1.5 yr after samples CA011 and CA021, both duplicate pairs are highly correlative, remaining within their respective oil family. This indicates little variation caused by analytical techniques. Temblor oil sample CA015 (well 18-14Z) is probably a member of both families B and A (instead of the family SOZ) because it is likely a comingled oil, representing both pre-Monterey and Stevens reservoirs (B. Countryman, 2000, personal communication).

Figure 6 shows the results of the principal component analysis using the heavy-end carbon isotope composition of the saturated and aromatic hydrocarbon fractions and key source-related biomarker ratios shown on the variable (loadings) plot. These are the same geochemical variables used in the cluster analysis. The five families defined in the cluster analysis are labeled on the principal component plot (A, B, C, SOZ, and SH) using the same color code. By comparing the scores and loadings plot, the geochemical variables responsible for the groupings become apparent. For example, the SOZ oils have high negative factor 1 values, meaning that they have the highest $\%C_{29}$ variable (steranes mostly from green algae) and the lightest (i.e., most negative) carbon isotope values ($^{13}C_s$ and $^{13}C_a$). Family B oils, from pre-Monterey reservoirs, have high S1/S6 (rearranged to regular steranes) and low C_{28}/H (bisnorhopane to hopane) ratios, whereas family C oils from the Northwest Stevens anticline have reversed values. These two parameters are most affected by thermal maturity, suggesting that the C_{15+} oil components in family B come from more deeply buried Monterey facies than family C oils. Families A and SH are not readily distinguished using only factors 1 and 2. These two families, which represent most of the oil produced from Elk Hills, are also most closely related based on the cluster analysis (Figure 5). By rotating the principal component axis (Figure 6), family A is better separated from family SH. Not surprisingly, the porcelanite-reservoired oils (SH) contain slightly more C_{28} steranes ($\%C_{28}$), many of which originate from diatoms.

Oils from Other Fields

Table 1 also lists 10 oils from southern San Joaquin fields other than Elk Hills. Three of these oils (CA225, CA226, and CA228) are from Eocene reservoirs (Kettleman N. Dome and Belgian Anticline fields) and have very light carbon isotopic compositions highly suggestive of Kreyenhagen source rocks (Peters et al., 1994). The two Kern River oils (CA269 and CA271) statistically most resemble the Elk Hills SOZ family,

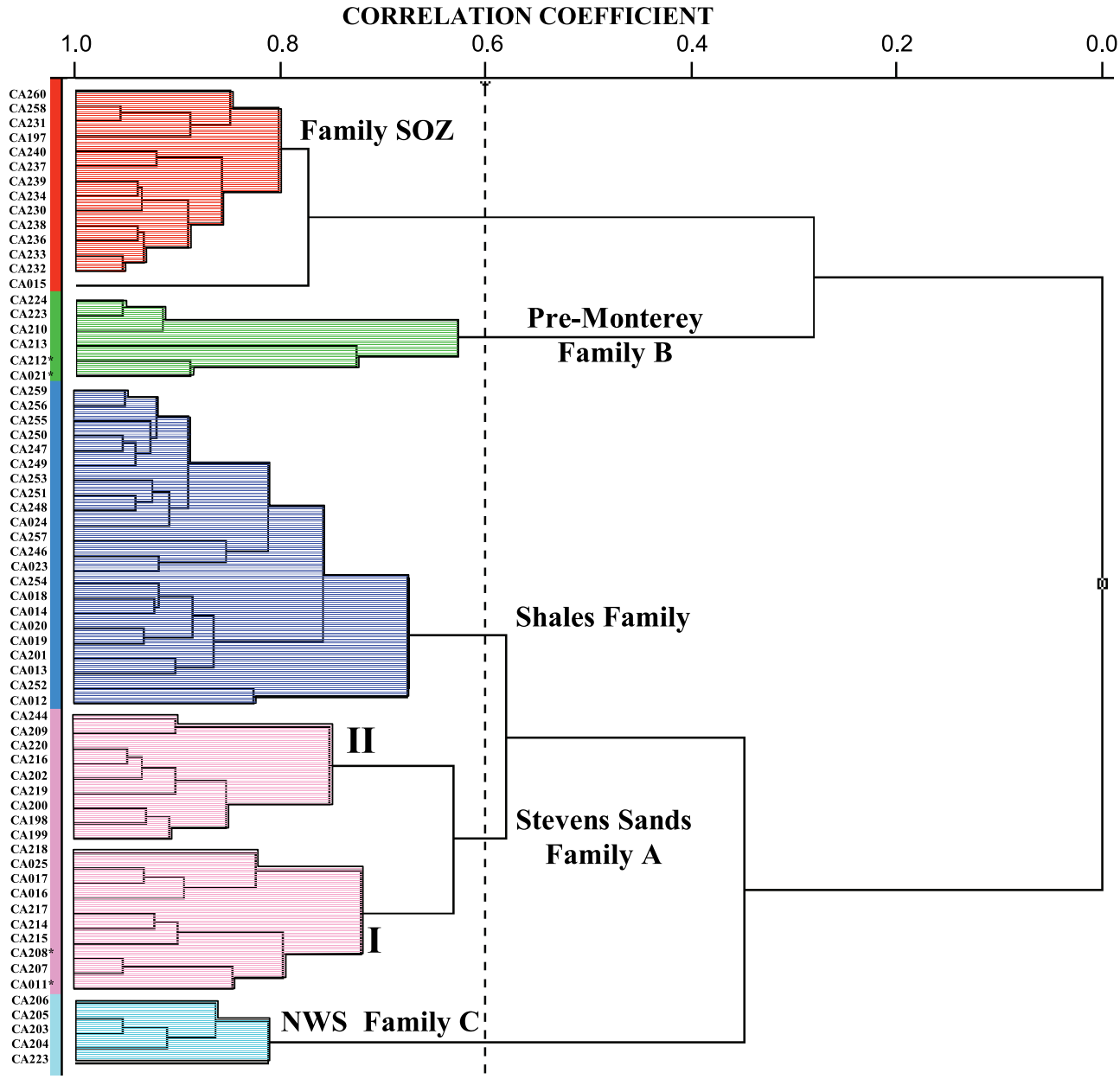

Figure 5. Cluster analysis dendrogram showing the five principal Elk Hills oil families. The geochemical variables used to construct this dendrogram are defined in Figure 6. Oils CA212 and CA021 as well as CA208 and CA011 represent duplicate sample pairs, collected and analyzed 18 months apart; the high correlations indicate little variation caused by sampling or analytical technique.

although they are produced from the Oligocene Vedder sandstone. The Stevens oil from West Bellevue (CA227) correlates best with family AI (same as Elk Hills Stevens oils), whereas the Rio Bravo oil (CA270) appears to be a member of family B. Heavily biodegraded oils from Midway-Sunset (CA245) and Deer Creek (CA221) fields preclude accurate correlation with Elk Hills families because the steranes have been degraded. The carbon isotopes, however, suggest a Monterey origin for oil from the Midway-Sunset field and perhaps a mixed Miocene–Eocene origin for Deer Creek oil. The deep Temblor test from exploratory well Ekho 1 (CA229) is too mature (the terpanes and steranes have been thermally degraded) to correlate successfully with Elk Hills oils. Again, the carbon isotopes strongly suggest a Monterey-equivalent source for this oil recovered at 18,015 ft (5491 m).

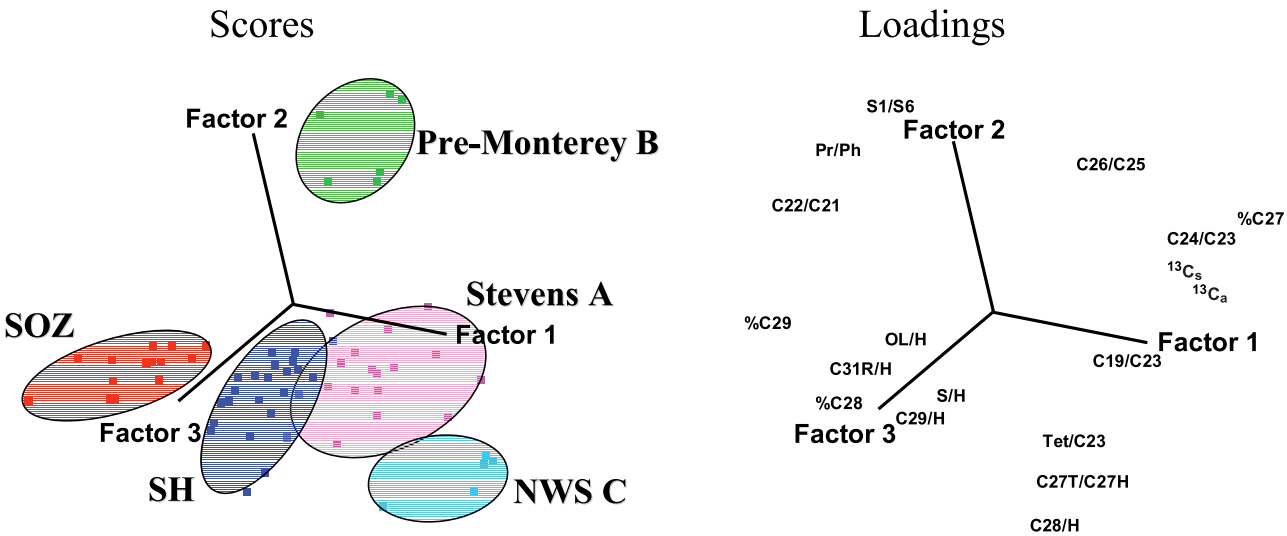

Figure 6. Principal component analysis showing the five Elk Hills oil families (scores) and geochemical variables (loadings) employed. S1/S6 = 13β,17α-diacholestane (20S)/5α-cholestane (20R); Pr/Ph = pristane/phytane from whole crude GC; %C27, %C28, and %C29 = relative percent 5α,14β,17β-cholestane (20S), 5α,14β,17β-ergostane (20S), and 5α,14β,17β-stigmastane (20S) based on *m/z* 218; C19/C23, C22/C21, C24/C23, and C26/C25 = various tricyclic terpane ratios; Tet/C23 = C24 teteracyclic terpane/C23 tricyclic terpane; C28/H = 17α,18α,21β-28,30-bisnorhopane/17α,21β-hopane; C29/H = 17α,21β-30-norhopane/17α,21β-hopane; OL/H = oleanane/17α,21β-hopane; C31R/H = 17α,21β-30-homohopane (22R)/17α,21b-hopane; C27T/C27H = 17α,18α,21β-25,28,30-trisnorhopane/(18α,21β-22,29,30-trisnorhopane + 17α,21β-22,29,30-trisnorhopane); S/H = sum of 15 steranes/16 hopanes; $^{13}C_s$ and $^{13}C_a$ = stable carbon isotopic composition of the C_{15+} saturate and aromatic hydrocarbons, respectively.

Stable Carbon Isotopes

The Elk Hills C_{15+} saturated and aromatic hydrocarbon fractions ($^{13}C_s$ and $^{13}C_a$, respectively; Table 1) have distinctive heavy isotopic compositions, characteristic of other marine-derived Miocene oils globally. In Figure 7, the Elk Hills oil families plot well to the marine side of the best separating line (marine versus nonmarine-sourced oils; Sofer, 1984), and the SOZ family is clearly distinguished, strongly suggesting a different Monterey source facies.

Based on the whole oil carbon isotope compositions ($^{13}C_{wo}$; Table 1), the less than C_{15+} fraction (% < C_{15} or light-ends) carbon isotopic ratios can be calculated using mass-balance considerations and are given in Table 1 (^{13}C LE). If the light hydrocarbons originated from the Eocene Kreyenhagen Formation, then they would likely have much more negative carbon isotopic compositions, approximately −28 to −29‰, instead of the −23 to −24‰ of the Miocene. In fact, the light hydrocarbons of most of the Elk Hills oils are isotopically more positive than the C_{15+} fractions (heavy-end ^{13}C HE), strongly suggesting that the Monterey generated both the light- and heavy-end components. This is illustrated in Figure 8, which is a plot of the light-end versus heavy-end carbon isotopic composition. Increasing thermal maturity results in more positive C_{15+} carbon isotope values (Sofer, 1984).

DISCUSSION

Thermal Maturity

The Elk Hills oils represent a wide range of Monterey source rock thermal maturities. Low-maturity indicators are common in the Monterey. Certain key biomarker ratios, in which one of the two related compounds is thermodynamically less stable, represent the maturity ranges of the heavy ends, and the least mature, local sources dominate (local to the reservoir; i.e., see figures 12 and 13 of Reid and McIntyre, 2001). Conversion of Monterey kerogen (1–7 wt.% and about 2–20 vol.% total organic carbon) to fluids involves a volume increase resulting in local overpressure zones, which allows primary oil migration and concentration. At present-day depths of about 5000–7000 ft (1524–2134 m), ongoing, early oil generation from

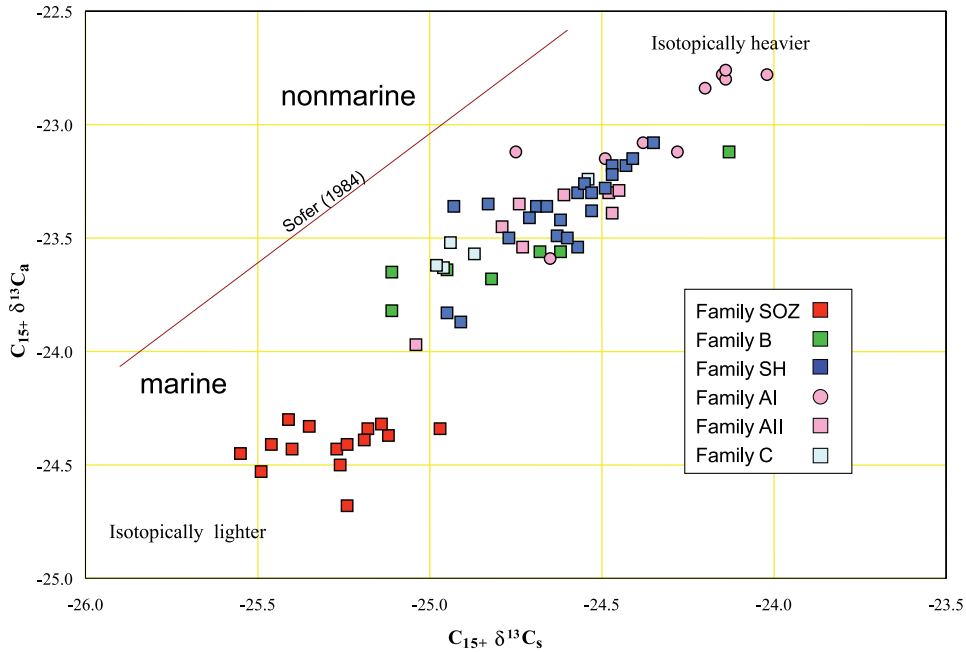

Figure 7. Stable carbon isotope composition of C_{15+} saturated and aromatic hydrocarbons. Shallow oil zone samples (family SOZ) are isotopically distinct, although they are still in the isotopic range of oils generated from the Monterey Formation. Biodegradation generally results in isotopically heavier values (Sofer, 1984).

labile, relatively sulfur-rich kerogen of Monterey source rocks maybe of sufficient magnitude to open microfractures, increasing porcelanite permeability. Paleodepths were likely greater with corresponding higher temperatures.

Figure 9 is a plot of the thermally sensitive terpane biomarkers C_{27} T_s to T_m and a triaromatic sterane ratio (TAS3), with higher ratios suggesting generation from more mature source rocks. The T_s/T_m ratio is also source dependent, so that maturity differences are valid only for oils in the same family. For example, Kern River Vedder oils are slightly more mature than Elk Hills SOZ samples, but they may or may not be of equivalent maturity to family C. Again, these terpane ratios reflect weighted maturity of the source rocks that generated the heavy ends, with the least mature horizons weighted more because they contain higher absolute concentrations of biomarkers. The triaromatic

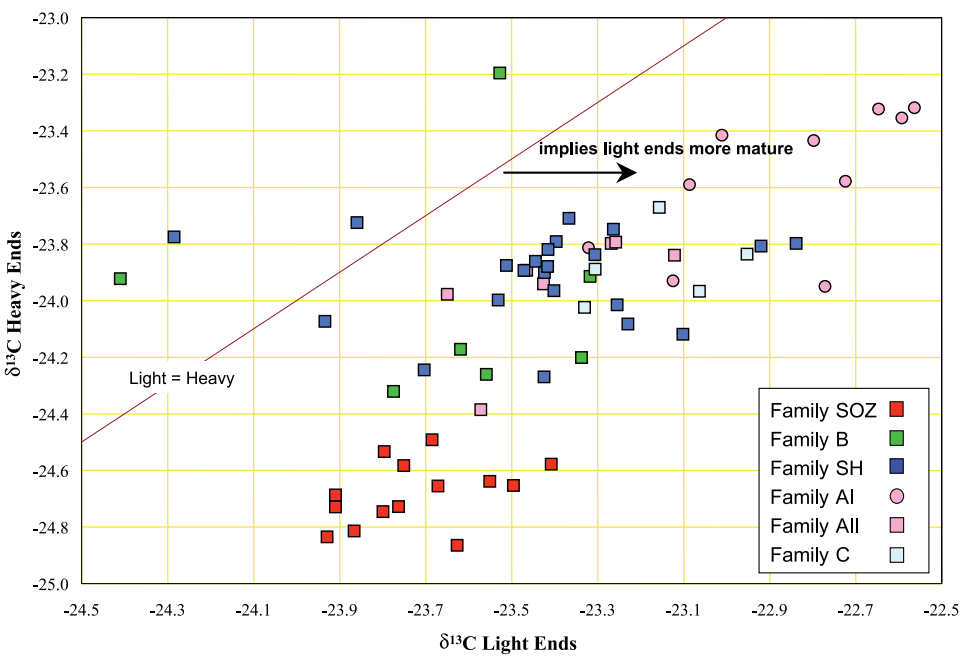

Figure 8. Stable carbon isotope composition of light-end versus heavy-end Elk Hills hydrocarbons. The light-end isotopic values were calculated from the measured heavy ends (C_{15+}) and whole crude isotopic values based on the amount of light ends lost from evaporation ($<C_{15}$; Table 1). The light-end hydrocarbons are isotopically heavier than the heavy ends, suggesting a Monterey source for both the light and heavy ends with the light ends from a more mature Monterey.

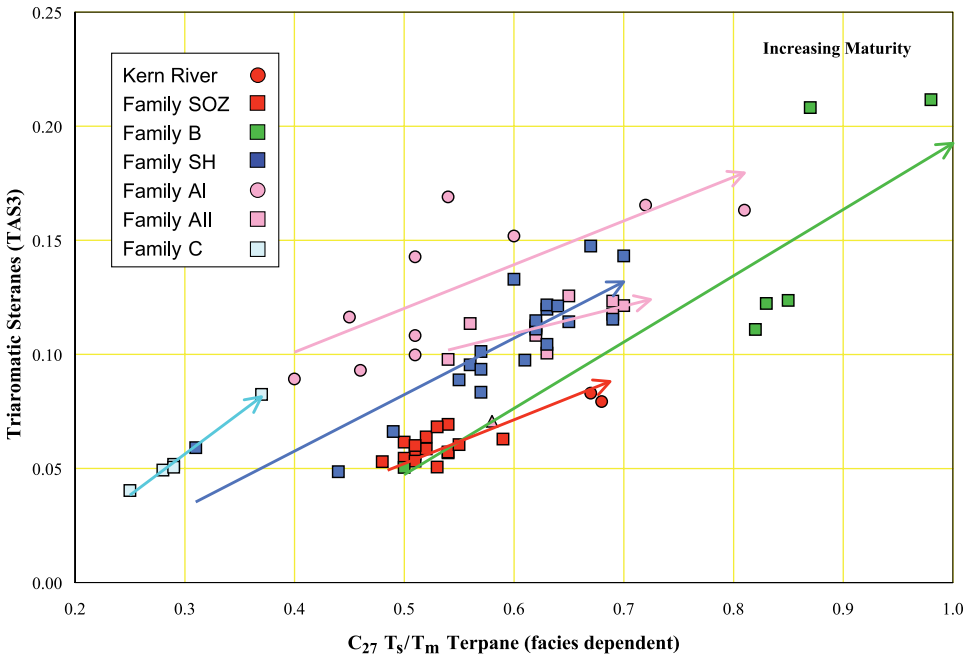

Figure 9. Heavy-end biomarker maturity indicators showing thermal-maturity trends in each oil family. Kern River field oils are related to Elk Hills family SOZ oils but appear slightly more mature. C_{27} T_s/T_m = 18α,21β-22,29,30-trisnorhopane/17α,21β-22,29,30-trisnorhopane; TAS3 = $[C_{20} + C_{21}]/[\Sigma C_{20} - C_{28}]$ triaromatic steranes (*m/z* 231).

sterane TAS3 ratio ($[C_{20} + C_{21}]/[\Sigma C_{20} - C_{28}]$; *m/z* = 231) appears to be a more universal indicator of maturity, with much less dependence on source. The C_{15+} fraction of SOZ and family C oils both contain the least mature TAS3 ratios.

The range of maturity indicated by family AI samples, which are from the Northwest Stevens and western 29R anticlines, suggests multiple pulses of oil generated from a source rock that is maturing over time. In contrast, family AII oils, which are mostly from the 31S Stevens turbidite reservoirs, have a more concentrated distribution, suggesting oils are derived from a source rock of consistent maturity.

A graph of the absolute concentrations of two terpane biomarkers (hopane [C_{30}] and bisnorhopane [C_{28}]) relative to the whole crude oil, including light ends, is given in Figure 10. As source rocks mature, fewer heavy-end biomarkers are generated relative to

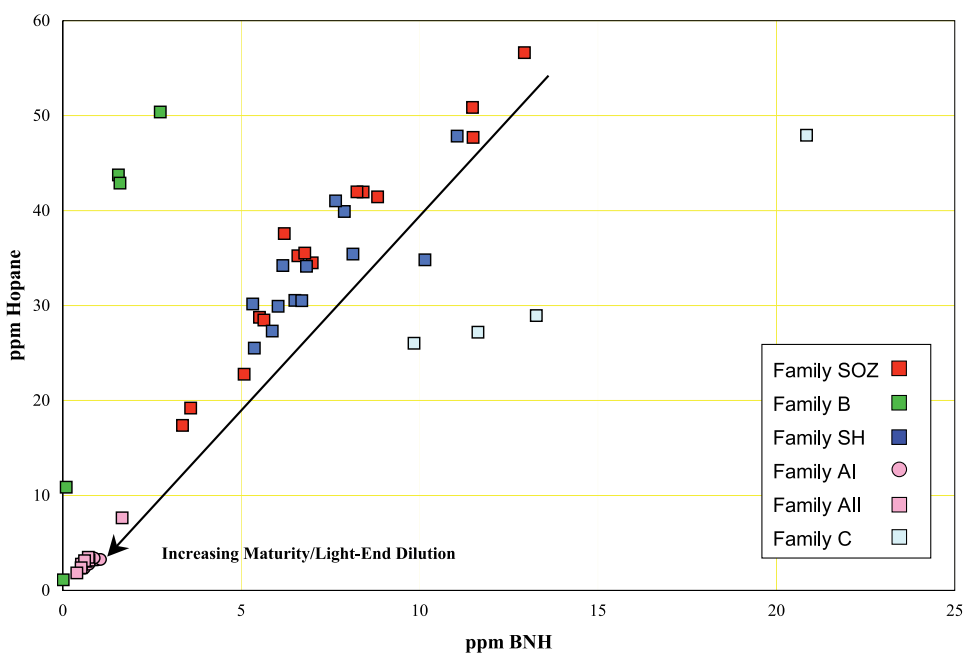

Figure 10. Absolute biomarker concentrations in whole crude oils: C_{28} bisnorhopane (17α,18α,21β-28,30-bisnorhopane) versus C_{30} hopane (17α,21β-hopane). The different trends between families B and C oils versus family A, shales (SH), and SOZ members correspond to different Monterey organic-rich facies. The absolute concentrations of these biomarkers are also a function of thermal maturity.

light-end hydrocarbons ($<C_{15}$). If the reservoir or trap is charged and intermixed with local low-maturity oil in addition to oils from various levels of increasing maturity (toward and including subbasin depocenters), then the oil should contain lower absolute concentrations of biomarkers with increasing charge of more mature, downdip generated oil. (Sample CA201, an oil from the upper Main Body B sandstone in well 347-35S, was not included in the figure because it has an anomalous resin content with a low API gravity, inconsistent with the % $< C_{15}$; this sample also appears to have been misclassified and is likely a member of family AII instead of SH.)

Families B and C oils show different trends in Figure 10 because of their abundance of bisnorhopane relative to hopane, both a source and maturity indicator (see Figure 6). The oils from families A, SH, and SOZ all have about the same bisnorhopane/hopane ratio. However, what is probably the most significant aspect of Figure 10 is the low absolute biomarker concentration of family A oils from the Stevens turbidites. Of course, these are, by far, the main oil producers in Elk Hills, and they contain the greatest proportion (or dilution) of more mature light hydrocarbons from the subbasin depocenters by a factor of about 10 or more (3–4 ppm hopane for Stevens turbidite oils versus 30–40+ ppm for the other oil families).

The relationship between the absolute hopane concentrations and the TAS3 maturity ratio for the heavy ends is illustrated in Figure 11. Again, family A oils have constant low amounts of biomarkers, although family AI appears to contain more mature heavy-end components than family AII. In contrast, family SOZ oils have the least mature heavy ends (along with family C) but have a threefold variation in hopane concentration. Much of the biomarker concentration variance in SOZ oils is caused by different degrees of biodegradation, which will be discussed below. In addition, some the SOZ oils may contain water and/or de-emulsifier, which can affect the measurement of % $< C_{15}$ (light ends), resulting in incorrect values for biomarker concentrations.

Families B and SH show maturity trends in the whole crude and heavy ends. Regarding family B, the lower Miocene Carneros oils appear to contain less mature oil than the older Santos samples. Both reservoirs contain Monterey-sourced oil migrating updip, but downsection, probably along faults. For SH oil family samples, an interesting trend is evident in Figure 11, at least for samples from the 29R anticline. The three opal-CT samples contain oil that is clearly less mature than the oil in the porcelanites that have undergone the opal-CT to quartz transition (four 29R wells). This suggests two pulses of oil charging: an initial wave of oil generated from a less mature source rock into the opal-CT reservoir and a second migration event from a similar but more mature source rock, but occurring after opal-CT porcelanite is converted to quartz phase. The 31S anticline oil in quartz porcelanite reservoirs appears less mature than the 29R anticline oil in corresponding quartz porcelanites. Perhaps the 29R reservoirs received a greater proportion of downdip oil than the 31S reservoirs.

Biodegradation of SOZ Oils

Family SOZ (all of the Reef Ridge and post-Miocene oils in Table 1) comprises a distinctly different type of Monterey oil than that seen in the Stevens turbidites. Because they occur in the youngest reservoirs, they probably originated from the uppermost organic-rich facies of the Monterey (similar to the Monterey facies that generated the Kern River field oil). Many of the SOZ oils have suffered biodegradation because of the low reservoir temperatures. The rate of biodegradation intensifies below reservoir temperatures of about 140°F (60°C). Biodegradation is evident from the whole crude gas chromatograms because the bacteria preferentially consume the n-paraffins, resulting in a lower quality oil (e.g., reduced API gravity and increased sulfur content). The isoprenoids pristane and phytane are more resistant to biodegradation than the n-paraffins (Figure 12), whereas the sterane and terpane biomarkers are the most resistant within the saturated hydrocarbon fraction. Most of the SOZ oils are only mildly degraded, although SOZ oil CA235 is extensively biodegraded (almost no n-paraffins and sterane biomarkers are altered). Other more degraded SOZ oils include CA239, CA230, CA233, and CA234. The API gravities have been significantly lowered in these more extensively degraded oils (Table 1).

However, reservoir temperature is not the only factor relating to the degree of biodegradation. Because oil-degrading bacteria live and reproduce in the aqueous phase, the oil must also be in contact with ground water in order for extensive biodegradation to occur. The most biodegraded SOZ oils occur on the flanks of the 31S anticline, likely corresponding to increased oil-water interaction. Many of the slightly biodegraded SOZ oils have abundant light ends, which is incompatible with biodegradation because bacteria use

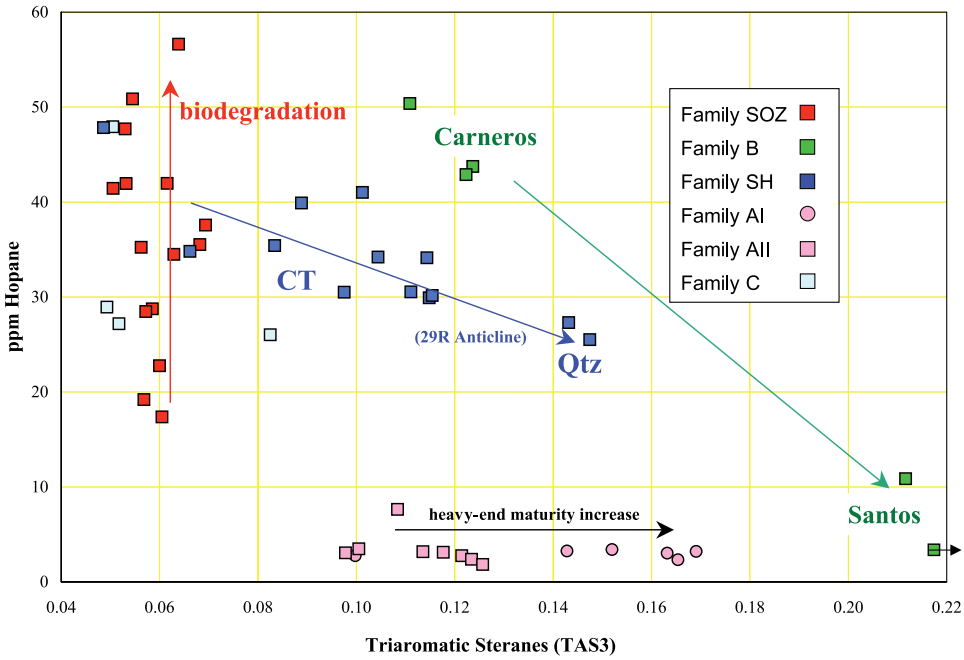

Figure 11. Absolute hopane concentrations versus triaromatic sterane maturity indicator. Family SOZ oils are of equivalent maturity but vary in hopane concentration because of different degrees of biodegradation. The heavy-end components of subfamily AI appear to have originated from more mature source rocks than subfamily AII. The pre-Monterey reservoired oils of family B show an increase in maturity for the older and deeper Santos oils compared to the younger Carneros oils; family B oils were likely generated from the lowermost organic-rich facies of the Monterey. Porcelanite reservoirs in the 29R anticline (western Elk Hills; family Shales) contain more thermally mature oil in the higher temperature microcrystalline quartz phase than in the opal-CT phase reservoirs, perhaps suggesting localized oil generation.

the lighter n-paraffins in preference to C_{15+} n-paraffins. This implies that the SOZ reservoirs have been charged with mature oil, which mixes with the biodegraded initial in-place oil. The quality of these polyhistory oils is determined by the rate of biodegradation versus the rate of recharging.

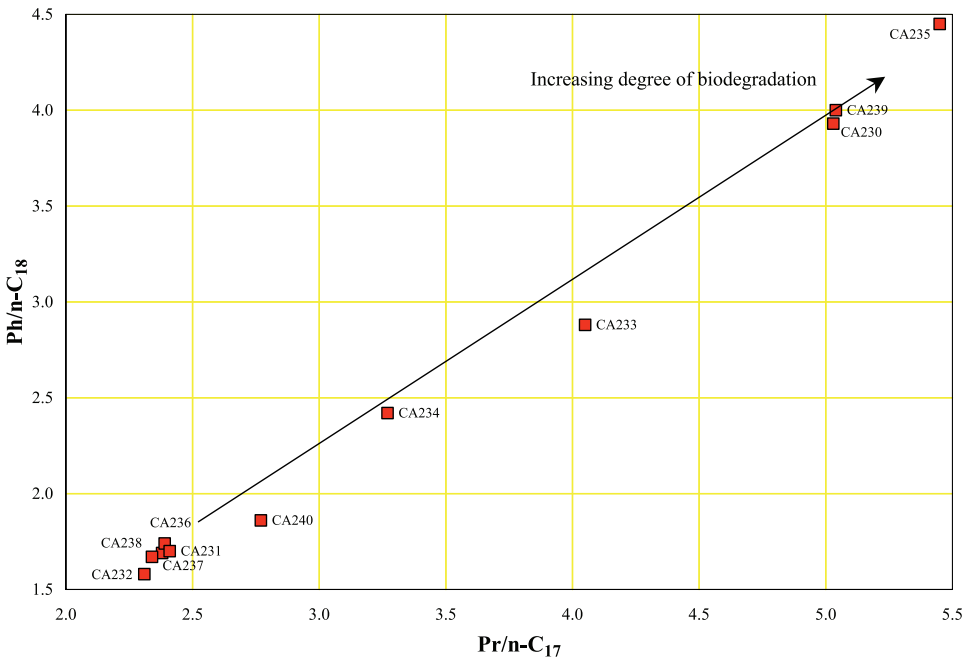

Figure 12. Pristane to n-C_{17} versus phytane to n-C_{18} plot representing various degrees of family SOZ (shallow oil zone) biodegradation. Bacteria preferentially degrade the n-paraffins relative to the isoprenoid hydrocarbons. The most degraded oils occur on the flanks of the 31R anticline.

Sequence of Filling Stevens Reservoirs

The geochemical data presented here provide a basis to speculate on the sequence of filling of the Elk Hills reservoirs. On the Northwest Stevens anticline, analysis of the oils (families AI and C) indicates multiple pulses for migration. The initial pulse may have consisted of low-maturity oil derived from the first phase of generation from the Monterey Formation (Figure 13A). Family C oil is restricted to the west end of the anticline and predominantly in a structural-stratigraphic trap. The trap is unique for Stevens reservoirs at Elk Hills in that it was fully formed before all the other traps (Imperato, 1995). The presence of low-maturity oil is consistent with the early trap formation, indicating that this trap had the geometry necessary to accept the initial oil expelled from the Monterey. This oil was generated from the Buttonwillow subbasin, which is structurally adjacent to and downdip of the Northwest Stevens anticline.

The remaining accumulations on the Northwest Stevens anticline contain family AI oils. Although family AI oils have a substantial high-maturity component (Figure 10), these oils have the widest distribution of all Stevens oils on a crossplot of maturity biomarkers (Figure 9). This distribution indicates that oil was derived from a source rock of consistent composition that became increasingly mature. Once the A4–A6 trap formed (probably by middle Pliocene), a continuous stream entered the trap from the Buttonwillow subbasin as the source rock matured and expelled oil (Figure 13B).

The Northwest Stevens anticline and the western 29R structure share some of the same turbidite sand bodies (Figure 4). Sandstone reservoirs on the two structures also share the same oil family (family AI). After filling of the Northwest Stevens anticline reservoirs, oil appears to have spilled into and filled the 24Z trap (Figure 13B). Family AI oil may also have reached the 2B trap on the east nose of the 29R anticline and the 26R reservoir at the west end of the 31S anticline, again moving within turbidite sand bodies from the Northwest Stevens structure.

Oil from Stevens sandstone reservoirs of the 31S anticline belong to family AII. This includes the Main Body B, Western 31S and 26R, and the 2B reservoirs on the eastern nose of the 29R anticline (Figure 13C). The 31S anticline is positioned on a structural high between the Maricopa and Buttonwillow subbasins and is favorably positioned to be charged from either. If family AII oil is derived from both areas, then the source facies must be extremely similar and at the same point of maturity when oil was expelled. Alternatively, only one of the subbasins supplied oil to the 31S sandstone reservoirs and the migration route from the other subbasin was somehow blocked. Maturity biomarkers (Figure 9) show a small maturity band for the AII oils, indicating that the source rock underwent minimal evolution during the period it charged 31S reservoirs. This charge history would be consistent with migration along a newly formed route, such as a developing fault zone on the flanks of the 31S anticline and the quick flooding of the reservoir zones in the late Pliocene or Pleistocene.

The 2B reservoir on the eastern nose of the 29R anticline also contains family AII oil (Figure 13C). The reservoir is a combination structural-stratigraphic trap that has an updip lateral seal formed by the abrupt pinch-out of the 26R sand body. Oil likely migrated from the adjacent 26R reservoir, which is filled to its spillpoint. The 2B reservoir is not filled to its spillpoint, and Reid (1990) speculated that leakage may have occurred through a lower sand body into the updip porcelanite interval. However, family AII oil is not present in the adjacent updip reservoir (as discussed below), indicating that the trap has not leaked and is instead underfilled, possibly because of rerouting of the oil-migration path away from the 31S anticline.

All the Stevens porcelanite reservoirs contain family SH oils (Figure 13D). The distinction between family A and SH oils is remarkable given the close proximity of the reservoir types and clearly indicates a strong segregation of migration routes or histories. A possible explanation is tied to the diagenesis of porcelanite. During migration of family A oils into Stevens sand reservoirs, the adjacent porcelanite intervals may have been at the opal-CT phase of the diagenetic process and had matrix permeabilities too low to permit significant oil to accumulate (Reid and McIntyre, 2001; Schwalbach et al., 2001). Migration into fractures may have occurred, thus accounting for the lower maturity oil present in the opal-CT interval (Figure 9). At some later point, after the sand reservoirs were filled, opal-CT converted to quartz phase and acquired sufficient matrix permeability to become an effective reservoir. Porcelanite reservoirs are the last of the Steven traps to be charged and occurred at a time when the Monterey oil-generating window is the closest to the Elk Hills anticlines. The differences in characteristics between families A and SH oils may reflect compositional variations between distal, basin-floor source rocks that charge the sand reservoir and

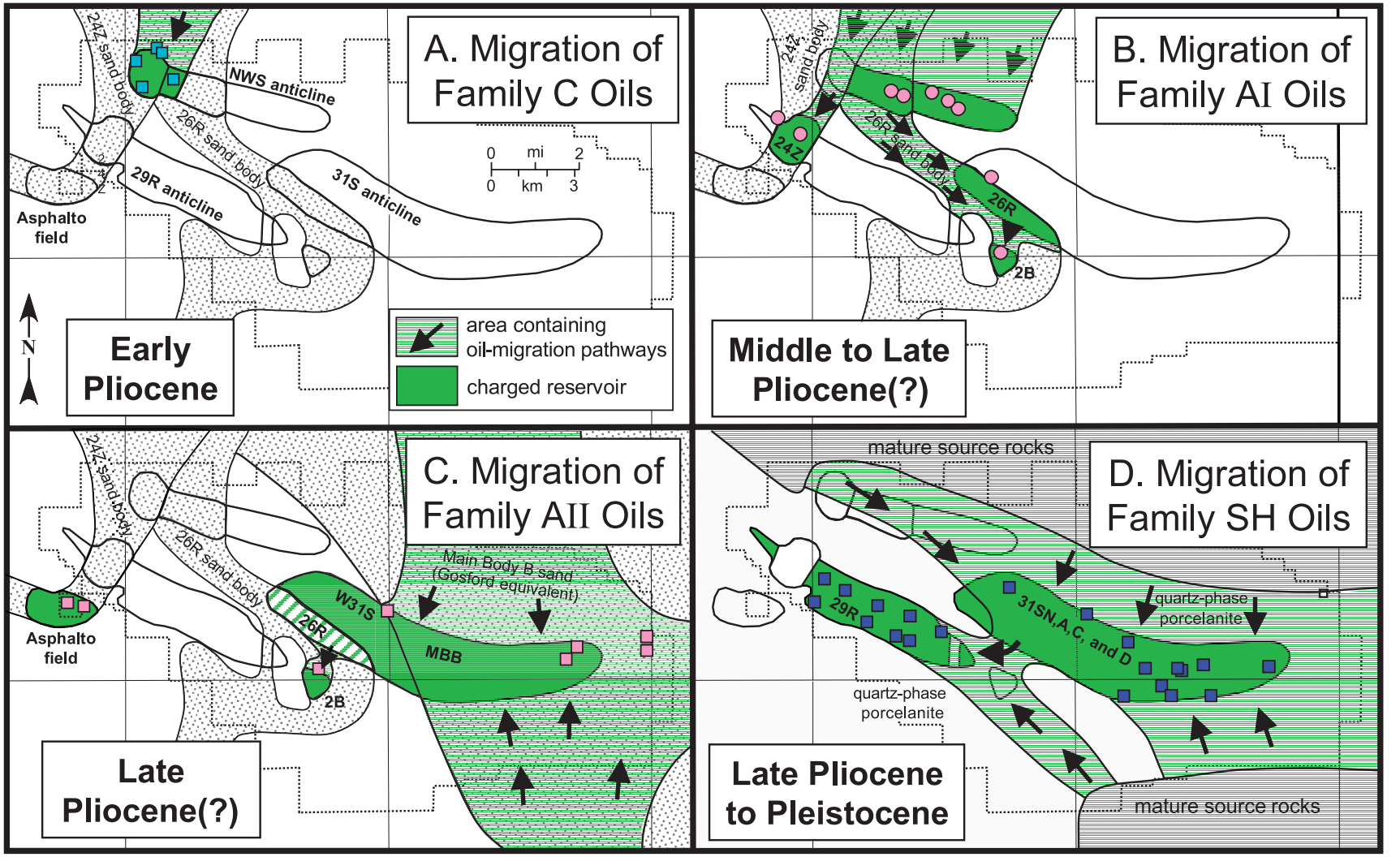

Figure 13. Migration of oil into major Stevens turbidite and porcelanite reservoirs at Elk Hills. (A) Family C oils are restricted to the western end of the Northwest Stevens anticline and are the least mature of the sampled oils. They may have migrated into the earliest formed traps in the Northwest Stevens anticline along turbidite sand bodies updip from the Buttonwillow subbasin. (B) Oils of family AI are likely derived from the Buttonwillow subbasin and filled reservoirs in the central and eastern Northwest Stevens anticline. Oil spilled from the Northwest Stevens traps and followed turbidite sand bodies updip into the 26R, 2B, and 24Z reservoirs. (C) Family AII oils probably are from both the Buttonwillow and Maricopa subbasins and migrated into the 31S reservoirs following the Main Body B submarine-fan complex. Oil possibly leaked into the 26R sand body and spilled into the 2B trap. The occurrence of family AII oil in the Asphalto field remains a dilemma. (D) Family SH oils occur in porcelanite reservoirs across the entire field and are sandwiched stratigraphically between families AI and AII reservoirs. Migration likely occurred after filling of the turbidite reservoirs and after development of more favorable porosity because of transition of porcelanite from opal-CT to quartz phase.

more proximal (lower slope?) areas where organic material was deposited on the flanks of actively growing structures.

The presence of family AII oil in the Asphalto field west of Elk Hills presents a migration dilemma because obvious migration routes are not supported by the geochemical data. Low-permeability opal-CT phase porcelanite on the 29R anticline should have blocked oil migration from the 2B area into 24Z or Asphalto. The other option of migration from the 24Z and Northwest Stevens anticline reservoirs seems unlikely because of the absence of family AII samples on this trend. This problem demonstrates that the distinction between family AI and AII is very subtle, and there may be limits to the extent oil families should be used to interpret migration history.

CONCLUSIONS

Five principal oil families, all generated from different organofacies of the Monterey, were determined to exist at Elk Hills based on multivariate statistical analyses of genetically important biomarker distributions and bulk carbon isotope compositions. Family C oil at the west end of the Northwest Stevens anticline contains the least mature oil and was the first to migrate into the Elk Hills areas. The remaining Stevens sandstone reservoirs have family A oil. These oils contain the most light-end hydrocarbons and were likely generated from organic-rich facies of the Monterey, stratigraphically adjacent to the turbidite sand bodies in location on or near the basin floor. Family SH oils, in porcelanite reservoirs, are widespread across the entire field and were derived from similar, albeit more local Monterey facies interbedded with quartz porcelanite. The pre-Monterey oils of family B appear to have been generated from lowermost, organic-rich Monterey facies. These have different biomarker distributions and are the most thermally mature, but also have the distinct isotopic signature of the Monterey. Family SOZ oils are commonly biodegraded, occur in shallow post-Monterey reservoirs, and were probably generated from uppermost organic-rich Monterey facies.

The aerial distribution of Stevens oil families (Figure 13) represents the development of source areas and oil-migration routes. Entrapment of the Monterey's initially generated and expelled low-maturity oil is very limited because migration routes to Elk Hills were not established and few traps had formed. By the time most of the Stevens structures form, the source areas located on or near the basin floors are generating high-maturity oil and expelling into the Stevens sand bodies. Migration routes may have altered over time, especially on the 31S anticline, where family AII oil was possibly diverted after charging the 31S reservoirs. Through the late Pliocene and Pleistocene, the thermally mature areas of the Buttonwillow and Maricopa subbasins expanded and approached the flanks of the Elk Hills anticlines. By the time quartz-phase porcelanite reservoirs developed sufficient permeability to accumulate oil, areas downdip on the anticlinal limbs were mature and expelling high-maturity oil.

The results of the carbon isotopic analyses suggest that both the heavy- and light-end components of Elk Hills reservoirs originated from the Monterey (no Eocene Kreyenhagen component). Oil was generated at various thermal-maturity stages (at different times and different depths in the subbasins) and mixed in the reservoir. Family A oils, from Stevens turbidites, by far the main oil producers at Elk Hills, contain a factor of 10 or more of the mature light hydrocarbons from the subbasin depocenters than the other families.

One conspicuous dichotomy noticed early in interpreting the chemistry of the Elk Hills Monterey oils was that the biomarkers indicate a low thermal maturity for the source, almost immature. However, the API gravities of most Elk Hills oils are between 30 and 40° with 40–50% light ends. These abundant lighter hydrocarbons and relatively high gravities indicate at least moderate thermal maturity for the source. Most biomarkers occur in the heavy C_{15+} fraction and are concentrated in low-maturity, early-generated oil. Subsequent oil expelled from deeper, more thermally mature source horizons contains more mature biomarker distributions, but at much lower absolute concentrations. Most of the Elk Hills oils produced from the Stevens sandstones appear to be the result of mixing, with small quantities of biomarker-rich low-maturity Monterey oil (migrating through the reservoirs prior to trap formation) being progressively diluted by increasingly mature oil from downdip source rocks containing abundant light ends. The question as to the source of these mature, light-end hydrocarbons, both in the Stevens and pre-Monterey reservoirs, has been answered based on carbon isotope compositions; the Monterey also generated the light-end hydrocarbons instead of the older Eocene Kreyenhagen.

What is remarkable about the Elk Hills oil families is the strong correlation with the reservoir interval (Table 1; Figure 2). The different oil families, generated from stratigraphic and geographic variations in the Monterey organic-rich facies, correspond to reservoir horizons. This suggests minimal upsection, cross-stratigraphic migration from the basin depocenters to Elk Hills; specific inter-Monterey source-reservoir packages extend downdip into the basin with good intervening seals. However, the pre-Monterey reservoired oils (family B) in the Carneros and Santos formations also contain Monterey oils, albeit at higher thermal maturities. It appears that the older Monterey source horizons can charge even older reservoir units as updip, but downsection migration occurs.

The Pliocene SOZ oils, which are isotopically distinct from other Elk Hills oils, have been biodegraded to different degrees. The most biodegraded oils have the lowest API gravities and occur on the flanks of the 31S anticline. Although slightly more positive (not caused by biodegradation), the carbon isotopic composition of SOZ oils suggests yet another Monterey source facies (perhaps the youngest) with charging of Pliocene reservoirs. The SOZ oils are not simply the result of vertical leakage in the Elk Hills area from any of the older Miocene reservoirs.

REFERENCES CITED

Bandy, O. L., and R. E. Arnal, 1969, Middle Tertiary basin development, San Joaquin Valley, California: Geological Society of American Bulletin, v. 80, p. 783–819.

Bartow, J. A., 1991, The Cenozoic evolution of the San Joaquin Valley, California: U.S. Geological Survey Professional Paper 1501, 40 p.

California Division of Oil, Gas, and Geothermal Resources, 2003, 2002 annual report of the state oil and gas supervisor: Sacramento, California, California Department of Conservation Publication No. PR06, 263 p.

Church, H. V., and K. Krammes, 1957, Correlation section no. 9 across central San Joaquin Valley from San Andreas fault to Sierra Nevada foothills, California: Pacific Section, AAPG Geologic Names and Correlations Committee.

Dunwoody, J. A., 1986, Correlation section no. 8 (revised) across southern San Joaquin Valley from San Andreas fault to Sierra Nevada foothills: Pacific Section, AAPG Geologic Names and Correlations Committee.

Fiore, P. E., D. D. Pollard, B. R. Currin, and D. D. Miner, 2004, Tectonic history and evolution of the faulting at Elk Hills oil field: A mechanical study (abs.): Pacific Section, AAPG, Annual Convention Abstract, www.searchanddiscovery.com /documents/abstracts/2004pacific/index.htm.

Graham, S. A., 1978, Role of Salinian block in evolution of San Andreas fault system, California: AAPG Bulletin, v. 62, p. 2214–2231.

Graham, S. A., and L. A. Williams, 1985, Tectonic, depositional, and diagenetic history of Monterey Formation (Miocene), central San Joaquin basin, California: AAPG Bulletin, v. 69, p. 365–411.

Graham, S. A., R. G. Stanley, J. V. Bent, and J. B. Carter, 1989, Oligocene and Miocene paleogeography of central California and displacement along the San Andreas fault: Geological Society of America Bulletin, v. 101, p. 711–730.

Harding, T. P., 1976, Tectonic significance and hydrocarbon trapping consequences of sequential folding synchronous with San Andreas faulting, California: AAPG Bulletin, v. 60, p. 356–378.

Imperato, D. P., 1995, Studies of the stratigraphy and structure of the Great Valley of California and implications for plate tectonics: Ph.D. dissertation, University of California at Santa Barbara, Santa Barbara, California, 271 p.

Isaacs, C. M., 1981, Field characterization of rocks in the Monterey Formation along the coast near Santa Barbara, California, *in* C. M. Isaacs, ed., Guide to the Monterey Formation in the California coastal area, Ventura to San Luis Obispo: Pacific Section, AAPG Field Trip Guidebook, v. 52, p. 39–53.

Isaacs, C. M., and J. Rullkötter, 2001, eds., Cooperative Monterey organic geochemistry study, the Monterey Formation: From rocks to molecules: New York, Columbia University Press, 608 p.

Kaplan, I. R., 2000, ed., Collection of papers about the oil, gas, and source rock investigations carried out in the San Joaquin, Santa Maria, Santa Barbara, Ventura and Los Angeles basins, California: Pacific Section AAPG, CD-ROM Series 1.

Kruge, M. A., 1986, Biomarker geochemistry of the Miocene Monterey Formation, west San Joaquin basin, California: Implications for petroleum generation: Organic Geochemistry, v. 10, p. 517–530.

MacPherson, B. A., 1978, Sedimentation and trapping mechanism in upper Miocene Stevens and older turbidite fans of southeastern San Joaquin Valley, California: AAPG Bulletin, v. 62, p. 2243–2278.

Nilsen, T. H., 1987, Paleogene tectonics and sedimentation of coastal California, *in* R. V. Ingersoll and W. G. Ernst, eds., Cenozoic basin development of coastal California, Rubey volume 6: Englewood Cliffs, New Jersey, Prentice-Hall, p. 81–123.

Peters, K. E., T. D. Elam, M. H. Pytte, and P. Sundararaman, 1994, Identification of petroleum systems adjacent to the San Andreas fault, California, U.S.A., *in* L. B. Magoon and W. G. Dow, eds., The petroleum system— From source to trap: AAPG Memoir 60, p. 423–436.

Peters, K. E., C. C. Walters, and J. M. Moldowan, 2005, The biomarker guide: Cambridge, United Kingdom, Cambridge University Press, 1024 p.

Reid, S. A., 1990, Trapping characteristics of upper Miocene turbidite deposits, Elk Hills field, Kern County, California, *in* J. G. Kuespert and S. A. Reid, eds., Structure, stratigraphy and hydrocarbon occurrences of the San Joaquin basin, California: Pacific Section, AAPG, guidebook GB65, p. 141–156.

Reid, S. A., 1995, Miocene and Pliocene depositional systems of the southern San Joaquin basin and formation of sandstone reservoirs in the Elk Hills area, California, *in* A. E. Fritsche, ed., Cenozoic paleogeography of the western United States— II: Pacific Section, SEPM, book 75, p. 131–150.

Reid, S. A., and J. L. McIntyre, 2001, Monterey Formation porcelanite reservoirs of the Elk Hills field, Kern County, California: AAPG Bulletin, v. 85, p. 169–189.

Schwalbach, J. R., W. C. Benmore, S. A. Reid, R. D. Tucker, and E. J. Hanley, 2001, Silica phase and compositional controls

on pore throat distributions — Porcelanite and siliceous shale of the Elk Hills field, California (abs.): AAPG Annual Meeting Program, v. 10, p. A181.
Sofer, Z., 1980, Preparation of carbon dioxide for stable carbon isotope analysis of petroleum fractions: Analytical Chemistry, v. 52, p. 1389–1391.
Sofer, Z., 1984, Stable carbon isotope compositions of crude oils: Application to source depositional environments and petroleum alteration: AAPG Bulletin, v. 68, p. 31–49.
Villanueva, L., and J. Kappeler, 1989, Correlation section 27 through central San Joaquin Valley from Turk anticline (Cantua Creek) to the Transverse Range: Pacific Section, AAPG Geologic Names and Correlations Committee.
Webb, G. W., 1981, Stevens and earlier Miocene turbidite sandstone, southern San Joaquin Valley, California: AAPG Bulletin, v. 65, p. 438–465.
West, N., R. Alexander, and R. I. Kagi, 1990, The use of silicalite for rapid isolation of branched and cyclic alkane fractions of petroleum: Organic Geochemistry, v. 15, p. 499–501.
Zieglar, D. L., and J. H. Spotts, 1978, Reservoir and source-bed history of Great Valley, California: AAPG Bulletin, v. 62, p. 813–826.