STOEL RIVES LLP
ATTORNEYS AT LAW

500 Capitol Mall, Suite 1600
Sacramento, CA 95814
main 916.447.0700
fax 916.447.4781
www.stoel.com

MELISSA A. FOSTER
Direct (916) 319-4673
mafoster@stoel.com

February 27, 2013

VIA EMAIL

Ms. Felicia Miller, Siting Project Manager
California Energy Commission
1516 Ninth Street
Sacramento, CA 95814

Re: Huntington Beach Energy Project (12-AFC-02)
Applicant's Correspondence Related to Air Quality (January and February 2013)

Dear Ms. Miller:

Applicant AES Southland Development, LLC and its consultant, CH2M Hill, Inc., have corresponded with the South Coast Air Quality Management District and California Energy Commission air quality staff to resolve questions related to air quality emissions. Enclosed herein for docketing, please find such correspondence and data files on disk.

We note that some emails indicate there are attachments; however, the attachments are data files that require special applications to access. To that end, Applicant is docketing a copy of the data files on disk, and will provide a copy of the related correspondence to all parties pursuant to the enclosed Proof of Service. If any party wishes to receive a copy of the disk containing the air quality data files, please contact the Applicant directly.

Respectfully submitted,

Melissa A. Foster

MAF:jmw
Enclosure
cc: Proof of Service List

BEFORE THE ENERGY RESOURCES CONSERVATION AND DEVELOPMENT COMMISSION OF THE STATE OF CALIFORNIA
1516 NINTH STREET, SACRAMENTO, CA 95814
1-800-822-6228 – WWW.ENERGY.CA.GOV

APPLICATION FOR CERTIFICATION FOR THE HUNTINGTON BEACH ENERGY PROJECT

Docket No. 12-AFC-02

PROOF OF SERVICE
(Revised 02/19/2013)

SERVICE LIST:

APPLICANT
AES Southland, LLC
Stephen O'Kane
Jennifer Didlo
690 Studebaker Road
Long Beach, CA 90803
stephen.okane@aes.com
jennifer.didlo@aes.com

APPLICANT'S CONSULTANTS
CH2MHill
Robert Mason
Project Manager
6 Hutton Centre Drive, Suite 700
Santa Ana, CA 92707
robert.mason@CH2M.com

APPLICANT'S COUNSEL
Melissa A. Foster
Stoel Rives, LLP
500 Capitol Mall, Suite 1600
Sacramento, CA 95814
mafoster@stoel.com

INTERVENOR
Jason Pyle
9071 Kapaa Drive
Huntington Beach, CA 92646
jasonpyle@me.com

INTERESTED AGENCIES
California ISO
e-recipient@caiso.com

INTERESTED AGENCIES (Cont'd.)
California Coastal Commission
Tom Luster
45 Fremont Street, Suite 2000
San Francisco, CA 94105-2219
tluster@coastal.ca.gov

California State Parks
Huntington State Beach
Brian Ketterer
21601 Pacific Coast Highway
Huntington Beach, CA 92646
bketterer@parks.ca.gov

City of Huntington Beach
Planning & Building Department
Jane James
Scott Hess
Aaron Klemm
2000 Main Street, 3rd floor
Huntington Beach, CA 92648
jjames@surfcity-hb.org
shess@surfcity-hb.org
aaron.klemm@surfcity-hb.org

City of Huntington Beach
City Council
Cathy Fikes
Johanna Stephenson
2000 Main Street, 4th floor
Huntington Beach, CA 92648
cfikes@surfcity-hb.org
johanna.stephenson@surfcity-hb.org.

INTERESTED AGENCIES (Cont'd.)
Santa Ana Regional
Water Quality Board
Gary Stewart
3737 Main Street, Suite 500
Riverside, CA 92501-3339
gstewart@waterboards.ca.gov

Huntington Beach
Wetlands Conservancy
Jack Kirkorn, Director
21900 Pacific Coast Highway
Huntington Beach, CA 92646
jfk0480@aol.com

ENERGY COMMISSION STAFF
Felicia Miller
Project Manager
felicia.miller@energy.ca.gov

Kevin W. Bell
Staff Counsel
kevin.w.bell@energy.ca.gov

ENERGY COMMISSION – PUBLIC ADVISER
Blake Roberts
Assistant Public Adviser
publicadviser@energy.ca.gov

COMMISSION DOCKET UNIT
California Energy Commission – Docket Unit
Attn: Docket No. 12-AFC-02
1516 Ninth Street, MS-4
Sacramento, CA 95814-5512
docket@energy.ca.gov

*Indicates change

OTHER ENERGY COMMISSION PARTICIPANTS (LISTED FOR CONVENIENCE ONLY):

After docketing, the Docket Unit will provide a copy to the persons listed below. Do not send copies of documents to these persons unless specifically directed to do so.

ANDREW McALLISTER
Commissioner and Presiding Member

KAREN DOUGLAS
Commissioner and Associate Member

*Susan Cochran
Hearing Adviser

David Hungerford
Adviser to Commissioner McAllister

Patrick Saxton
Adviser to Commissioner McAllister

Galen Lemei
Adviser to Commissioner Douglas

Jennifer Nelson
Adviser to Commissioner Douglas

Eileen Allen
Commissioners' Technical
Adviser for Facility Siting

DECLARATION OF SERVICE

I, Judith M. Warmuth, declare that on February 27, 2013, I served and filed copies of the attached Applicant's Correspondence Related to Air Quality (January and February 2013) dated February 27, 2013. This document is accompanied by the most recent Proof of Service, which I copied from the web page for this project at: http://www.energy.ca.gov/sitingcases/huntington_beach_energy/index.html.

The document has been sent to the other parties on the Service List above in the following manner:

(*Check one*)

For service to all other parties and filing with the Docket Unit at the Energy Commission:

☒ I e-mailed the correspondence only to all e-mail addresses on the Service List above and personally delivered it or deposited it in the US mail with first class postage to those parties noted above as "hard copy required"; **OR**

☒ Instead of e-mailing the document, I personally delivered it or deposited it in the US mail with first class postage to all of the persons on the Service List for whom a mailing address is given.

I declare under penalty of perjury under the laws of the State of California that the foregoing is true and correct, and that I am over the age of 18 years.

Dated: February 27, 2013

Judith M. Warmuth

Judith M. Warmuth

From: jbaker@aqmd.gov
Sent: Friday, January 18, 2013 2:57 PM
To: Jerry.Salamy@CH2M.com; Keith.McGregor@CH2M.com
Cc: CPerri@aqmd.gov; tchico@aqmd.gov
Subject: Huntington Beach Energy Project

Hi Jerry,

Based on my preliminary review of the modeling performed for the Huntington Beach Energy Project, I have the following comments:

1) A 5-year meteorological dataset is required for all PSD projects. I will provide those files along with the ozone files in a subsequent email.
2) In your submitted report, the analysis for the impact related to the Federal 1-hour NO_2 standard is extremely conservative and is not consistent with the methods contained in the March 1, 2011 memo issued by the US EPA (i.e. it does not follow the form of the standard and does not take into account the conversion of NO_X to NO_2). You can find the memo here: http://www.epa.gov/ttn/scram/guidance/clarification/Additional_Clarifications_AppendixW_Hourly-NO2-NAAQS_FINAL_03-01-2011.pdf.
3) Based on your analysis, this project will exceed the SIL for the Federal 1-hour NO_2 standard. This will require a cumulative analysis of ambient impacts for NO_2. As I explained in our phone conversation, the overly conservative nature of the Federal 1-hour NO_2 project impact analysis contained in your report would cause a larger area within the project impact contour than is necessary when performing the cumulative impact analysis. It is my understanding that such an analysis has been prepared and will be submitted to the District for our review. Therefore, I am unable to complete my modeling review of this project until the cumulative analysis report is received.

Please let me know if you have any questions.

Jillian Baker, Ph.D.
South Coast AQMD
21865 Copley Drive,
Diamond Bar, CA 91765
Direct: 909.396.3176

From: jbaker@aqmd.gov
Sent: Tuesday, January 22, 2013 12:57 PM
To: Benjamin.Beattie@CH2M.com
Cc: Jerry.Salamy@CH2M.com; Elyse.Engel@ch2m.com; Keith.McGregor@CH2M.com
Subject: RE: AERMET Meteorological Data Request

Ben,

Attached is the ozone file for CSTA.

Jillian Baker, Ph.D.
South Coast AQMD
21865 Copley Drive,
Diamond Bar, CA 91765
Direct: 909.396.3176

From: Benjamin.Beattie@CH2M.com [mailto:Benjamin.Beattie@CH2M.com]
Sent: Friday, January 18, 2013 3:21 PM
To: Jillian Baker
Cc: Jerry.Salamy@CH2M.com; Elyse.Engel@ch2m.com; Keith.McGregor@CH2M.com
Subject: RE: AERMET Meteorological Data Request

We will be using the latest released version of AERMOD (12345).

Benjamin Beattie
Engineer

CH2MHILL

2485 Natomas Park Drive, Suite 600
Sacramento, CA 95833
(916) 572-0679

From: Jillian Baker [mailto:jbaker@aqmd.gov]
Sent: Friday, January 18, 2013 3:17 PM
To: Beattie, Benjamin/SAC
Cc: Salamy, Jerry/SAC; Engel, Elyse/SJC; McGregor, Keith/SAC
Subject: RE: AERMET Meteorological Data Request

Hi Ben,

For the 5-year meteorological data, which version of AERMOD do you intend to use? This will determine which dataset I send you.

Jillian Baker, Ph.D.
South Coast AQMD
21865 Copley Drive,
Diamond Bar, CA 91765
Direct: 909.396.3176

From: Benjamin.Beattie@CH2M.com [mailto:Benjamin.Beattie@CH2M.com]
Sent: Friday, January 18, 2013 12:33 PM
To: Jillian Baker
Cc: Jerry.Salamy@CH2M.com; Elyse.Engel@ch2m.com; Keith.McGregor@CH2M.com
Subject: AERMET Meteorological Data Request

Hi Jillian,
Thank you for the advice and information you gave us regarding the federal 1-hr NO2 standard cumulative assessment. If you have it available, could you please send me the five-year AERMET dataset for the Costa Mesa station and the accompanying hourly background ozone files?
Thank you,

Benjamin Beattie
Engineer

CH2MHILL

2485 Natomas Park Drive, Suite 600
Sacramento, CA 95833
(916) 572-0679

From: Jerry.Salamy@CH2M.com
Sent: Wednesday, January 23, 2013 11:45 AM
To: CPerri@aqmd.gov
Cc: stephen.okane@AES.com; Jennifer.Didlo@AES.com; Robert.Mason@CH2M.com; Hellwig, Kimberly J.; Foster, Melissa A.; Felicia.Miller@energy.ca.gov
Subject: HBEP Cumulative Impact Assessment
Attachments: HBEP_Cum_Imp_Cover_and_Attachment_1-23-13.pdf

Mr. Perri,

Attached is a cumulative impact assessment prepared in response to a California Energy Commission data request. A hard copy of this document along with a CD containing the air dispersion modeling files will be sent via overnight mail.

Thanks,

Jerry Salamy
Principal Project Manager
CH2M HILL/Sacramento
Phone 916-286-0207
Fax 916-614-3407
Cell Phone 916-769-8919

CH2M HILL
2485 Natomas Park
Drive Suite 600
Sacramento, CA
95833
Tel 916.920.0300
Fax 916.920.8463

January 23, 2013

Mr. Chris Perri
Air Quality Engineer
South Coast Air Quality Management District
21865 Copley Drive
Diamond Bar, CA 91765-4178

Subject: Huntington Beach Energy Project Permit Application (Facility ID# 115389)

Dear Mr. Perri:

On behalf of AES Huntington Beach, LLC (AES-HB) and at the direction of Mr. Stephen O'Kane, Manager at AES-HB, CH2M HILL is submitting the attached Huntington Beach Energy Project (HBEP) Data Responses, Set 1B, which contains a cumulative air quality impact assessment. This cumulative air quality impact assessment was prepared in response to a California Energy Commission (CEC) data request and was docketed with the CEC. Also included is a compact disk containing the dispersion modeling input and output files.

The cumulative air quality impact assessment demonstrates that HBEP's air quality impacts, combined with air quality impacts of other nearby sources recently permitted but not yet in operation or undergoing permitting and representative background concentrations, will not cause or contribute to a violation of an ambient air quality standard for which the area is in attainment of these standards. AES-HB looks forward to working with the District to resolve any questions the District may have regarding the air dispersion modeling conducted for the HBEP project.

If you require further information, please do not hesitate contacting Mr. Stephen O'Kane at 562-493-7840.

Sincerely,

CH2M HILL

Jerry Salamy
Principal Project Manager

Attachments
cc: Stephen O'Kane/AES w/o Attachment
Robert Mason/CH2M HILL w/o Attachment
Jennifer Didlo/AES w/o Attachment
Missy Foster/Stoel Rives w/o Attachment
Jerry Salamy/CH2M HILL w/o Attachment
Felicia Miller/CEC w/o Attachment

Huntington Beach Energy Project

(12-AFC-02)

Data Responses, Set 1B

(Responses to Data Requests 11 and 23–26)

Submitted to

California Energy Commission

Prepared by

AES Southland Development, LLC

With Assistance from

CH2MHILL®
2485 Natomas Park Drive
Suite 600
Sacramento, CA 95833

January 17, 2013

Contents

Section **Page**

Introduction 1

Air Quality 3

Biological Resources 13

Tables

DR11-1 HBEP Cumulative Impact Sources
DR11-2 Summary of Modeled Emission Rates and Source Parameters
DR11-3 Cumulative Impacts Analysis—Maximum Modeled Impacts Compared to the Ambient Air Quality Standards
DR23-1 Critical Loads of Nitrogen for the California Mediterranean Ecoregion and Wetlands
DR24-1 HBEP Average Annual Depositional Nitrogen Emissions (per turbine)
DR24-2 Comparison of the Predicted HBEP N Deposition Flux to the Critical Loads of Nitrogen for the California Mediterranean Ecoregion and Wetlands
DR26-1 Cumulative Source Depositional Nitrogen Emissions
DR26-2 Comparison of the Predicted Cumulative Sources and HBEP N Deposition Flux to the Critical Loads of Nitrogen for the California Mediterranean Ecoregion and Wetlands

Figures (Figures are provided at the end of their respective sections)

DR25-1 HBEP Total Nitrogen Deposition on Surrounding Habitats
DR25-2 HBEP Total Nitrogen Deposition on Surrounding Habitats
DR26-1 HBEP Cumulative Nitrogen Deposition on Surrounding Habitats
DR26-2 HBEP Cumulative Nitrogen Deposition on Surrounding Habitats

Attachments

DR11-1 Facilities Removed from Cumulative Impact Assessment
DR11-2 Facilities Included in Cumulative Impact Assessment
DR11-3 Summary of Dispersion Modeling Parameters and Results

Introduction

Attached are AES Southland Development, LLC's (AES or the Applicant) updated responses to the California Energy Commission (CEC) Data Request, Set 1B regarding the Huntington Beach Energy Project (HBEP) (12-AFC-02) Application for Certification (AFC). This submittal includes responses to the following data requests: 11 and 23–26.

The responses are grouped by individual discipline or topic area. Within each discipline area, the responses are presented in the same order as the CEC presented them and are keyed to the Data Request numbers.

New or revised graphics or tables are numbered in reference to the Data Request number. For example, the first table used in response to Data Request 36 would be numbered Table DR36-1. The first figure used in response to Data Request 42 would be Figure DR42-1, and so on. Figures or tables from the HBEP AFC that have been revised have "R1" following the original number, indicating revision 1.

Additional tables, figures, or documents submitted in response to a data request (for example, supporting data, stand-alone documents such as plans, folding graphics, etc.) are found at the end of each discipline-specific section and are not sequentially page-numbered consistently with the remainder of the document, though they may have their own internal page numbering system.

Air Quality

BACKGROUND

CUMULATIVE MODELING ANALYSIS

Applicant states in the AFC they are working with South Coast Air Quality Management District (SCAQMD) to complete all the background information for the cumulative air impact analysis, and are currently trying to identify other applicable sources from SCAQMD to get a complete cumulative air impact analysis.

DATA REQUEST

11. Please provide the cumulative modeling and impact analysis, including HBEP and the other projects approved by staff.

Response:

As presented in Attachment DR10-1[1], additional information was requested from the SCAQMD to complete the assessment of the potential cumulative impact sources included within six (6) miles of HBEP. Based on the detailed permit application data received from the SCAQMD, additional facilities were removed from the cumulative assessment if the applications were administrative changes only, the permitted sources did not result in an increase in emissions, it was concluded that the emissions increase would be less than significant (e.g., less than a 5 ton increase), or it was determined the location of the permitted source was beyond 6 miles from HBEP. Attachment DR11-1 provides a summary of the facilities removed from the list of potential cumulative sources. The complete package of SCAQMD permit application materials received is included on a supplemental CD.

Table DR11-1 presents a final list of the facilities that have been included in the HBEP cumulative impact modeling assessment. Attachment DR11-2 provides a summary of the information used to develop the list of facilities included in the cumulative impact assessment.

TABLE DR11-1
HBEP Cumulative Impact Sources

Facility ID	Facility Name	Number of Sources	Permit Application Number(s)	Description
17301	Orange County Sanitation District	4	486760, 486792, 486793, 494460	Addition of a boiler and three IC engines.
29110	Orange County Sanitation District	8	455670, 455671, 455673, 474766, 474767, 474768, 474769, 474770	Addition of three emergency diesel ICEs. Permit modification for five existing emergency diesel ICEs.
167066	Arlon Graphics LLC	1	534234	Addition of recuperative thermal oxidizer and change in conditions for existing oxidizer.

Cumulative Air Quality Impact Analysis

The cumulative air quality impact analysis was conducted using the model settings and receptor grid approach outlined in the AFC, with the exception of the receptor grid. The spatial extent of the receptor grid was reduced from 50 km to 10 km because the maximum impacts for the HBEP dispersion modeling analysis were within

[1] In response to Data Request #10 in the Data Response Set 1A submittal on November 2, 2012.

10 km. Receptors within the cumulative facility fence lines were also removed from the model setup because they would not be representative of ambient conditions.

Modeling Parameters

The emission and exhaust parameters used to estimate the cumulative impacts are presented in Table DR11-2. Because specific locations for each cumulative emission source were not available, all sources at a facility were modeled as though they were at the center of the facility. Also, because emission rates for $PM_{2.5}$ were not available for the cumulative sources, it was conservatively assumed that $PM_{2.5}$ emission rates were equal to those of PM_{10}. The source parameters were based on the following data sources. A summary of the dispersion modeling inputs and output is also included in Attachment DR11-3.

Huntington Beach Energy Project:

- Source parameters and emission rates were based on the operating scenario, which includes start-up and shutdown emissions, resulting in the maximum predicted impacts presented in Table 5.1-29 of the AFC.
- The hourly NO_2 concentrations in AFC Table 5.1-29 conservatively assumed a complete conversion of NO_x to NO_2. However, the 1-hour NO_2 concentrations for the cumulative impacts were modeled using the Plume Volume Molar Ratio Method (PVMRM) as discussed in Section 5.1.6.3 of the AFC.

Orange County Sanitation District (Facility ID 17301):

- Source parameters and emission rates were based on permitted source data received from the SCAQMD on October 24, 2012, and November 2, 2012, with additional data provided by the SCAQMD on November 29, 2012.
- The annual emissions from the three digester gas ICEs were based on the daily maximum permitted allowances for the engines.
- The short-term NO_x emissions from the permitted boiler were modeled at 15 ppm, based on the permit limit beginning in 2015.

Orange County Sanitation District (Facility ID 29110):

- Source parameters and emission rates were based on permitted source data received from the SCAQMD on October 25, 2012, with additional data provided by the SCAQMD on November 29, 2012.
- The permit applications for the five emergency diesel ICEs (permitted February 27, 2008) are for a change in conditions only (increasing annual operating hours for each engine from 30 to 50 hours). Therefore, there was no increase in short-term emissions from these sources and the annual emissions modeled reflect only the increase in total emissions.
- As stack parameters were unavailable for the three emergency diesel ICEs (permitted April 12, 2006), it was assumed these were equivalent to the five emergency diesel ICEs previously described.

Arlon Graphics, LLC (Facility ID 167066):

- Source parameters and emission rates were based on permitted source data received from the SCAQMD on October 24, 2012, with additional data provided by the SCAQMD on December 5, 2012.
- Permit application numbers 532302 and 534234 are for new construction of a recuperative thermal oxidizer (RTO) and reductions to the permit limits of an existing RTO. The result of these permits is a net increase of emissions of CO, SO_2, PM_{10}, and $PM_{2.5}$, and a net decrease in emissions of NO_x. Therefore, only the increase in short-term and annual emissions were modeled using the stack parameters of the new RTO.

TABLE DR11-2
Summary of Modeled Emission Rates and Source Parameters

Source Description	Easting (m)	Northing (m)	Base Elevation (m)	Stack Height (ft)	Temperature (°F)	Exit Velocity (ft/s)	Stack Diameter (ft)	Emissions (lb/hr)[a]							Emissions (tpy)[a]	
								1-hr NOx	1-hr CO	1-hr SO_2	3-hr SO_2	8-hr CO	24-hr SO_2	24-hr $PM_{10}/PM_{2.5}$	Annual NOx	Annual $PM_{10}/PM_{2.5}$
Orange County Sanitation District (Facility ID 17301)																
Boiler	412725	3728250	7.7	42	360	30.5	1.5	0.22	0.90	0.13	0.13	0.90	0.13	0.056	1.60	0.60
Digester Gas ICEs (3)	412725	3728250	7.7	62	500	58.7	2.5	23.01	55.05	2.25	2.25	55.1	2.25	2.25	67.2	6.57
Orange County Sanitation District (Facility ID 29110)																
Emergency Diesel ICEs (8)[b]	411100	3722400	1.6	28	597	111.3	1.3	—	—	—	1.19	20.6	0.15	0.32	5.38	0.17
Arlon Graphics, LLC (Facility ID 167066)																
RTO	414875	3730325	13.5	25	195	80.3	4.3	0	0.34	0.002	0.002	0.34	0.002	0.017	0	0.073

[a]Emissions are presented as totals for each source type.
[b]Sources identified as emergency diesel ICEs are permitted for 50 hr/yr of maintenance and testing. Therefore, it is assumed that the simultaneous testing of all ICEs and a startup cycle for all six turbines at HBEP would not occur.

Modeling Results

The maximum modeled cumulative NO_2, CO, SO_2, and $PM_{2.5}$ concentrations combined with the background concentrations do not exceed the ambient air quality standards (AAQS). The results of the cumulative modeling analysis also assumes that the contribution to background air quality that results from the existing Huntington Beach Generating Station emissions would remain the same in the future. However, as noted in the AFC, the existing Huntington Beach Generating Station boiler units will be removed after completion of HBEP construction. Therefore, the cumulative sources are not expected to cause or contribute to the violation of a standard, and the NO_2, CO, SO_2, and $PM_{2.5}$ impacts will be less than significant.

For PM_{10}, the background concentrations exceed the AAQS without the cumulative sources, with the exception of the federal 24-hour standard. As a result, the impact of the cumulative sources plus background also exceeds the AAQS and the operation of the cumulative sources would further contribute to an existing violation of the state standards absent mitigation. As discussed in the AFC, HBEP emissions will be fully offset consistent with SCAQMD Rules 1303 and 1304 using the SCAQMD internal offset bank. Therefore the PM_{10} impacts will be mitigated to a less-than-significant level.

TABLE DR11-3
Cumulative Impacts Analysis—Maximum Modeled Impacts Compared to the Ambient Air Quality Standards

Pollutant	Averaging Time	Maximum Modeled Concentration (µg/m^3)	Background Concentration (µg/m^3)[a]	Total Predicted Concentration (µg/m^3)	State Standard (µg/m^3)	Federal Standard (µg/m^3)
NO_2	1-hour[b]	28.4	152	180	339	—
	federal 1-hour[b, c]	28.4	111	139	—	188
	annual	1.05	24.8	25.9	57	100
SO_2	1-hour	2.19	26.2	28.4	655	—
	federal 1-hour[d]	2.19	17	19.2	—	196
	3-hour	3.62	17.3	20.9	—	1,300
	24-hour	0.73	10.5	11.2	105	365
CO	1-hour	161	3,436	3597	23,000	40,000
	8-hour	46.7	2,519	2566	10,000	10,000
PM_{10}	24-hour	2.81	56	58.8	50	150
	annual	0.45	23.5	24.0	20	—
$PM_{2.5}$	24-hour[c]	2.81	22.7	25.5	—	35
	annual	0.45	10.4	10.9	12	15

[a]Background concentrations were the highest concentrations monitored during 2008 through 2010, unless otherwise noted.

[b]The hourly NO_2 concentrations in the AFC Table 5.1-29 conservatively assumed a complete conversion of NOx to NO_2. However, the 1-hour NO_2 concentrations for the cumulative impacts were modeled using PVMRM. The PVMRM is a refined approach that results in a less conservative estimate.

[c]Total predicted concentrations for the federal 1-hour NO_2 standard and 24-hour $PM_{2.5}$ standard are the respective maximum modeled concentrations combined with the 3-year average of 98th percentile background concentrations.

[d]Total predicted concentrations for the federal 1-hour SO_2 standard is the maximum modeled concentrations combined with the 3-year average of 99th percentile background concentrations.

Attachment DR11-1
Facilities Removed from Cumulative Impact Assessment

HUNTINGTON BEACH CITY, WATER DEPT - Facility 24427 Sources								
Application Number	Permit Number	Permit Issued Date	Permit Status	Equipment Type	Equipment Description	Application Date	Application Status	Reason for Exclusion from Analysis
532000	G19503	7/26/2012	ACTIVE	Basic	I C E (50-500 HP) N-EM STAT NAT GAS ONLY	2/3/2012	PERMIT TO OPERATE GRANTED	Permitted source did not result in an increase in emissions. See correspondence with SCAQMD.

CH2MHILL® TELEPHONE CONVERSATION RECORD

Call To: Ray Ronquillo, Engineer, South Coast Air Quality Management District

Phone No.: (909) 396-3049 **Date:** 11/28/12

Call From: Beth Storelli **Time:** 4:25pm

Message Taken By: Beth Storelli

Subject: Source Information

Project No.: 458993.01.01

Notes:

I asked Ray about the following source:

Control #70458 HUNTINGTON BEACH CITY, WATER DEPT - Facility 24427

- Form 400 indicates that this is a replacement for an existing engine, confirm with engineer that old engine (Waukesha VHP5790) was retired, and that new engine has fewer emissions. If not, need permit application for emissions and exhaust parameters.

Ray responded that he believes the old engine has been retired and that newer engines should have fewer emissions.

WEST NEWPORT OIL COMPANY - Facility 42775 Sources								
Application Number	Permit Number	Permit Issued Date	Permit Status	Equipment Type	Equipment Description	Application Date	Application Status	Reason for Exclusion from Analysis
536895			ACTIVE	Basic	BOILER (5-20 MMBTU/HR) NAT GAS ONLY	5/17/2012	PERMIT TO OPERATE GRANTED	Information unavailable at time of analysis. Based on equipment description, assumed permitted source did not result in an increase in emissions greater than 5 tons/yr.
509314				Basic	BOILER (5-20 MMBTU/HR) COMB GAS-LPG	3/24/2010	APPLICATION CHANGED FROM CLASS I - III	Information unavailable at time of analysis. Based on equipment description, assumed permitted source did not result in an increase in emissions greater than 5 tons/yr.
512550				Basic	FACILITY PERMIT AMEND-RECLAIM/TITLE V	7/1/2010	ASSIGNED TO ENGINEER - CLASS III	Information unavailable at time of analysis. Based on equipment description, assumed administrative change only.

OXY USA INC - Facility 169754 Sources								
Application Number	Permit Number	Permit Issued Date	Permit Status	Equipment Type	Equipment Description	Application Date	Application Status	Reason for Exclusion from Analysis
538851				Basic	HEATER/FURNACE (	6/19/2012	ASSIGNED TO ENGINEER - CLASS I	Information unavailable at time of analysis. Based on equipment description, assumed permitted source did not result in an increase in emissions greater than 5 tons/yr.
533146				Basic	BOILER (5-20 MMBTU/HR) NAT GAS ONLY	3/6/2012	ASSIGNED TO ENGINEER - CLASS I	Information unavailable at time of analysis. Based on equipment description, assumed permitted source did not result in an increase in emissions greater than 5 tons/yr.
529234			ACTIVE	Basic	HEATER/FURNACE (	11/8/2011	PERMIT TO OPERATE GRANTED	Administrative change only
529223			ACTIVE	Basic	I C E (50-500 HP) EM ELEC GEN-DIESEL	11/8/2011	PERMIT TO OPERATE GRANTED	Administrative change only
529225			ACTIVE	Basic	I C E (50-500 HP) EM FIRE FGHT-DIESEL	11/8/2011	PERMIT TO OPERATE GRANTED	Administrative change only
529224			ACTIVE	Basic	I C E (50-500 HP) EM FIRE FGHT-DIESEL	11/8/2011	PERMIT TO OPERATE GRANTED	Administrative change only
529226			ACTIVE	Basic	I C E (50-500 HP) EMERG OTHER, DIESEL	11/8/2011	PERMIT TO OPERATE GRANTED	Administrative change only
529240			ACTIVE	Basic	I C E (50-500 HP) N-EM STAT DIESEL	11/8/2011	PERMIT TO OPERATE GRANTED	Administrative change only
529236			ACTIVE	Control	FLARE, OTHER	11/8/2011	PERMIT TO OPERATE GRANTED	Information unavailable at time of analysis. Based on same application date and status of other sources, assumed administrative change only.
529235			ACTIVE	Control	TAIL GAS INCINERATOR	11/8/2011	PERMIT TO OPERATE GRANTED	Administrative change only
534354				Basic	MICRO-TURBINE NOT NAT GAS,METHANOL OR LPG	3/27/2012	ASSIGNED TO ENGINEER - CLASS I	Information unavailable at time of analysis. Based on equipment description, assumed permitted source did not result in an increase in emissions greater than 5 tons/yr.
529232			ACTIVE	Basic	NATURAL GAS DRYING	11/8/2011	PERMIT TO OPERATE GRANTED	Administrative change only
529229			ACTIVE	Basic	NATURAL GAS DRYING	11/8/2011	PERMIT TO OPERATE GRANTED	Administrative change only

YAKULT U.S.A., INC. - Facility 168160 Sources								
Application Number	Permit Number	Permit Issued Date	Permit Status	Equipment Type	Equipment Description	Application Date	Application Status	Reason for Exclusion from Analysis
524509				Basic	BOILER (5-20 MMBTU/HR) NAT GAS ONLY	6/24/2011	APPLICATION CHANGED FROM CLASS I - III	Information unavailable at time of analysis. Based on equipment description, assumed permitted source did not result in an increase in emissions greater than 5 tons/yr.
524510				Basic	BOILER (5-20 MMBTU/HR) NAT GAS ONLY	6/24/2011	APPLICATION CHANGED FROM CLASS I - III	Information unavailable at time of analysis. Based on equipment description, assumed permitted source did not result in an increase in emissions greater than 5 tons/yr.

From:	Maria Rubio
To:	Storelli, Elizabeth/SAC
Subject:	RE: CH2M Hill Records Request - update
Date:	Thursday, January 03, 2013 1:34:32 PM

Hi Beth,

Thank you! I have not received the files yet. I sent out the Third Reminder. I will notify you as soon as I here from them.

From: Elizabeth.Storelli@ch2m.com [mailto:Elizabeth.Storelli@ch2m.com]
Sent: Thursday, January 03, 2013 9:13 AM
To: Maria Rubio
Subject: RE: CH2M Hill Records Request - update

Hi Maria,

I hope you had a nice holiday break. Can you please provide me with an update on the status of our remaining data requests?

Outstanding requests:
Control #s: 70235, 70236, 70238, 70231

Thank you,

Beth Storelli

CH2M HILL
2485 Natomas Park Drive, Suite 600
Sacramento, CA 95833
Office 916.286.0259
elizabeth.storelli@ch2m.com

From: Maria Rubio [mailto:mrubio@aqmd.gov]
Sent: Wednesday, December 05, 2012 4:12 PM
To: Storelli, Elizabeth/SAC
Subject: RE: CH2M Hill Records Request - update

Hi Beth,

All your request are still with the engineer I will send a second reminder.

From: Elizabeth.Storelli@ch2m.com [mailto:Elizabeth.Storelli@ch2m.com]
Sent: Wednesday, December 05, 2012 3:56 PM
To: Maria Rubio

Subject: RE: CH2M Hill Records Request - update

Hi Maria,

I thought I would check in on the status of our last few data requests.

As of 11/14 (3 weeks ago), it looks like PRR #70235, 70236, 70238, 70231 were with the engineer.

Do you have any update on when these may be available to us? We are starting to close in on our project due date.

Thank you,

Beth Storelli

CH2M HILL
2485 Natomas Park Drive, Suite 600
Sacramento, CA 95833
Office 916.286.0259
elizabeth.storelli@ch2m.com

From: Maria Rubio [mailto:mrubio@aqmd.gov]
Sent: Wednesday, November 14, 2012 10:09 AM
To: Storelli, Elizabeth/SAC
Subject: RE: CH2M Hill Records Request - update

Hi Elizabeth,

For PRR #70458 I still need to work on it.I have 15 requests ahead of yours.

PRR #70235, 70236, 70238, 70231 are with the engineer.

PRR #70236 This facility is a Title V. I have routed for most current facility permit.

I will forward emails for Control 70237 & 70230.

Maria

From: Elizabeth.Storelli@ch2m.com [mailto:Elizabeth.Storelli@ch2m.com]
Sent: Wednesday, November 14, 2012 9:24 AM
To: Maria Rubio
Subject: CH2M Hill Records Request - update

Hi Maria,

In order to ensure that we are both on the same page, below is a summary of the information that I am still waiting on. Can you please confirm that you have submitted requests to the engineers for the following:

Control #	Application #
70458	532000
70235	536895, 509314, 512550
70236	517842, 516030, 516026 – 29, 533625
70237 - I was sent a completion letter, but I only received the routing slip (attached)	
70238	524509, 524510
70231	538851, 533146, 534354
70230 – For App #: 514139 all I received was the attached, do you have additional information?	

I have also attached a tracker that I created to keep track of everything you have sent me, if that is more helpful.

Thank you and please don't hesitate to call if you have any questions!

Beth Storelli

CH2M HILL
2485 Natomas Park Drive, Suite 600
Sacramento, CA 95833
Office 916.286.0259
elizabeth.storelli@ch2m.com

BETA OFFSHORE - Facility 166073 Sources								
Application Number	Permit Number	Permit Issued Date	Permit Status	Equipment Type	Equipment Description	Application Date	Application Status	Reason for Exclusion from Analysis
517842			ACTIVE	Basic	I C E (50-500 HP) N-EM STAT DIESEL	1/18/2011	PERMIT TO OPERATE GRANTED	Location of the permitted sources is beyond 6 miles from HBEP
517841			ACTIVE	Basic	I C E (50-500 HP) N-EM STAT DIESEL	1/18/2011	PERMIT TO OPERATE GRANTED	Location of the permitted sources is beyond 6 miles from HBEP
517840			ACTIVE	Basic	I C E (50-500 HP) N-EM STAT DIESEL	1/18/2011	PERMIT TO OPERATE GRANTED	Location of the permitted sources is beyond 6 miles from HBEP
517839			ACTIVE	Basic	I C E (50-500 HP) N-EM STAT DIESEL	1/18/2011	PERMIT TO OPERATE GRANTED	Location of the permitted sources is beyond 6 miles from HBEP
517838			ACTIVE	Basic	I C E (50-500 HP) N-EM STAT DIESEL	1/18/2011	PERMIT TO OPERATE GRANTED	Location of the permitted sources is beyond 6 miles from HBEP
516030				Basic	I C E (>500 HP) N-EM STAT DIESEL	11/2/2010	PERMIT TO CONSTRUCT GRANTED	Location of the permitted sources is beyond 6 miles from HBEP
516026				Basic	I C E (>500 HP) N-EM STAT DIESEL	11/2/2010	APPLICATION CHANGED FROM CLASS I - III	Location of the permitted sources is beyond 6 miles from HBEP
516027				Basic	I C E (>500 HP) N-EM STAT DIESEL	11/2/2010	APPLICATION CHANGED FROM CLASS I - III	Location of the permitted sources is beyond 6 miles from HBEP
516028				Basic	I C E (>500 HP) N-EM STAT DIESEL	11/2/2010	APPLICATION CHANGED FROM CLASS I - III	Location of the permitted sources is beyond 6 miles from HBEP
516029				Basic	I C E (>500 HP) N-EM STAT DIESEL	11/2/2010	APPLICATION CHANGED FROM CLASS I - III	Location of the permitted sources is beyond 6 miles from HBEP
516024			ACTIVE	Basic	I C E (50-500 HP) EM ELEC GEN-DIESEL	11/2/2010	PERMIT TO OPERATE GRANTED	Location of the permitted sources is beyond 6 miles from HBEP
516034			ACTIVE	Basic	I C E (50-500 HP) N-EM STAT DIESEL	11/2/2010	PERMIT TO OPERATE GRANTED	Location of the permitted sources is beyond 6 miles from HBEP
516037			ACTIVE	Basic	I C E (50-500 HP) N-EM STAT DIESEL	11/2/2010	PERMIT TO OPERATE GRANTED	Location of the permitted sources is beyond 6 miles from HBEP
516020			ACTIVE	Basic	I C E (>500 HP) EM ELEC GEN DIESEL	11/2/2010	PERMIT TO OPERATE GRANTED	Location of the permitted sources is beyond 6 miles from HBEP
516021			ACTIVE	Basic	I C E (>500 HP) EM ELEC GEN DIESEL	11/2/2010	PERMIT TO OPERATE GRANTED	Location of the permitted sources is beyond 6 miles from HBEP
516022			ACTIVE	Basic	I C E (>500 HP) EM ELEC GEN DIESEL	11/2/2010	PERMIT TO OPERATE GRANTED	Location of the permitted sources is beyond 6 miles from HBEP
516023			ACTIVE	Basic	I C E (>500 HP) EM ELEC GEN DIESEL	11/2/2010	PERMIT TO OPERATE GRANTED	Location of the permitted sources is beyond 6 miles from HBEP
516025			ACTIVE	Basic	I C E (>500 HP) N-EM STAT DIESEL	11/2/2010	PERMIT TO OPERATE GRANTED	Location of the permitted sources is beyond 6 miles from HBEP
516045			ACTIVE	Control	FLARE, OTHER	11/2/2010	PERMIT TO OPERATE GRANTED	Location of the permitted sources is beyond 6 miles from HBEP
516047			ACTIVE	Control	FLARE, OTHER	11/2/2010	PERMIT TO OPERATE GRANTED	Location of the permitted sources is beyond 6 miles from HBEP
531455			ACTIVE	Basic	TURBINE ENGINE (<=50 MW) N G/P G-DIESEL	1/24/2012	PERMIT TO OPERATE GRANTED	Location of the permitted sources is beyond 6 miles from HBEP
516038			ACTIVE	Basic	TURBINE ENGINE (<=50 MW) N G/P G-DIESEL	11/2/2010	PERMIT TO OPERATE GRANTED	Location of the permitted sources is beyond 6 miles from HBEP
516039			ACTIVE	Basic	TURBINE ENGINE (<=50 MW) N G/P G-DIESEL	11/2/2010	PERMIT TO OPERATE GRANTED	Location of the permitted sources is beyond 6 miles from HBEP
516040			ACTIVE	Basic	TURBINE ENGINE (<=50 MW) N G/P G-DIESEL	11/2/2010	PERMIT TO OPERATE GRANTED	Location of the permitted sources is beyond 6 miles from HBEP
516041			ACTIVE	Basic	TURBINE ENGINE (<=50 MW) N G/P G-DIESEL	11/2/2010	PERMIT TO OPERATE GRANTED	Location of the permitted sources is beyond 6 miles from HBEP
516043			ACTIVE	Basic	TURBINE ENGINE (<=50 MW) N G/P G-DIESEL	11/2/2010	PERMIT TO OPERATE GRANTED	Location of the permitted sources is beyond 6 miles from HBEP
516044			ACTIVE	Basic	TURBINE ENGINE (<=50 MW) N G/P G-DIESEL	11/2/2010	PERMIT TO OPERATE GRANTED	Location of the permitted sources is beyond 6 miles from HBEP
516046			ACTIVE	Basic	TURBINE ENGINE (<=50 MW) N G/P G-DIESEL	11/2/2010	PERMIT TO OPERATE GRANTED	Location of the permitted sources is beyond 6 miles from HBEP
533625				Basic	FACILITY PERMIT AMEND-RECLAIM/TITLE V	3/8/2012	ASSIGNED TO ENGINEER - CLASS III	Location of the permitted sources is beyond 6 miles from HBEP
531454				Basic	FACILITY PERMIT AMEND-RECLAIM/TITLE V	1/24/2012	ASSIGNED TO ENGINEER - CLASS III	Location of the permitted sources is beyond 6 miles from HBEP
517837				Basic	FACILITY PERMIT AMEND-RECLAIM/TITLE V	1/18/2011	BANKING/ PLAN GRANTED	Location of the permitted sources is beyond 6 miles from HBEP

CHEVRON PRODUCTS COMPANY - Facility 800302 Sources								
Application Number	Permit Number	Permit Issued Date	Permit Status	Equipment Type	Equipment Description	Application Date	Application Status	Reason for Exclusion from Analysis
540059				Control	AFTERBURNER, DIRECT FLAME	6/29/2012	ASSIGNED TO ENGINEER - CLASS III	Application cancelled
514139				Control	AFTERBURNER, DIRECT FLAME	8/31/2010	ASSIGNED TO ENGINEER - CLASS III	Administrative change only
514138				Basic	Title V Permit Revision	8/31/2010	BANKING/ PLAN GRANTED	Administrative change only
501915				Basic	Title V Permit Revision	8/26/2009	BANKING/ PLAN GRANTED	Permitted source did not result in emissions of cumulative modeled pollutants

Attachment DR11-2
Facilities Included in Cumulative Impact Assessment

ORANGE COUNTY SANITATION DISTRICT - Facility 17301 Sources								
Application Number	Permit Number	Permit Issued Date	Permit Status	Equipment Type	Equipment Description	Application Date	Application Status	Reference of data for Analysis / Reason for Exclusion from Analysis
486760	G2955	5/22/2009	ACTIVE	Basic	I C E (>500 HP) NAT & DIGESTER GAS	8/12/2008	PERMIT TO OPERATE GRANTED	Data obtained from SCAQMD Engineering Application folder and direct correspondence with SCAQMD.
486792	G2956	5/22/2009	ACTIVE	Basic	I C E (>500 HP) NAT & DIGESTER GAS	8/12/2008	PERMIT TO OPERATE GRANTED	Data obtained from SCAQMD Engineering Application folder and direct correspondence with SCAQMD.
486793	G2957	5/22/2009	ACTIVE	Basic	I C E (>500 HP) NAT & DIGESTER GAS	8/12/2008	PERMIT TO OPERATE GRANTED	Data obtained from SCAQMD Engineering Application folder and direct correspondence with SCAQMD.
494460				Basic	BOILER (5-20 MMBTU/HR) NAT & PROC GAS	12/30/2008	PERMIT TO CONSTRUCT GRANTED	Data obtained from SCAQMD Permit and Application.
491468	G1549	2/19/2009	ACTIVE	Basic	UNSPECIFIED EQUIP/PROCESS (SCH C)	10/30/2008	PERMIT TO OPERATE GRANTED	Source not included in analysis. Temporary research unit, permit expired on 11/30/2009
520795				Basic	Title V Permit Revision	6/12/2009	BANKING/ PLAN GRANTED	Source not included in analysis. Administrative change only.
514393				Basic	Title V Permit Revision	2/6/2009	BANKING/ PLAN GRANTED	Source not included in analysis. Administrative change only.

From: Gaurang Rawal
To: Storelli, Elizabeth/SAC
Subject: FW: Stack Parameters data request - follow-up email
Date: Thursday, November 29, 2012 9:02:50 AM
Attachments: SCAQMD_Info Request CGS 11_29_2012.xlsx

Hi Beth,

Attached is the requested info.
One plant (ID 17301) has 3-identical engines and the other plant (ID 29110) has five identical engines.
Hope, this information will be helpful.

Regards,

Gaurang Rawal

From: Ahn, Terry [mailto:tahn@ocsd.com]
Sent: Thursday, November 29, 2012 8:52 AM
To: Gaurang Rawal
Cc: Kogan, Vlad
Subject: RE: Stack Parameters data request - follow-up email

Hi Gaurang,

The data in the attached file comes from the AB2588 HRA reports we submitted to SCAQMD in 2008.

If you need anything else please let me know.

Terry

From: Gaurang Rawal [mailto:grawal@aqmd.gov]
Sent: Thursday, November 29, 2012 8:36 AM
To: Ahn, Terry
Subject: FW: Stack Parameters data request - follow-up email

Terry,

Just a follow up to our conversation this morning. Below is the requested info. Thanks for your prompt attention and assistance.

Gaurang
9909) 396-2543

From: Elizabeth.Storelli@ch2m.com [mailto:Elizabeth.Storelli@ch2m.com]

Sent: Wednesday, November 28, 2012 4:46 PM
To: Gaurang Rawal
Subject: Stack Parameters data request - follow-up email

Hi Gaurang,

Thank you for speaking with me this evening. As I mentioned, we are working on a cumulative air quality analyses on the area surrounding our client's project site in Huntington Beach. We have gone through SCAQMD's FIND database as well as submitted and received information through your Public Records Request process.

We have a few outstanding pieces of information that we still need regarding facilities that you are the engineer on. Can you please provide us with the following infomration:

1. Orange County Sanitation District Facility (ID: 17301): Can you please provide the stack parameters (height(ft), diameter(ft), temp(F), velocity(FPs)) for dispersion modeling for the following Application #s: 486760, 486792, 486793
2. Orange County Sanitation District Facility District Facility (ID: 29110) Can you please provide the stack parameters (height(ft), diameter(ft), temp(F), velocity(FPs)) for dispersion modeling for the following Application #: 480908

Please feel free to call if you have any additional questions.

Thank you,

Beth Storelli

CH2M HILL
2485 Natomas Park Drive, Suite 600
Sacramento, CA 95833
Office 916.286.0259
elizabeth.storelli@ch2m.com

OCSD CGS Engines Source Parameters

POINT SOURCES	Stack Height		Exhaust Temperature		Exhaust Flow rate		Exhaust Velocity		Stack Diameter	
	(feet)	(m)	(°F)	(°K)	(ft^3/min)	(m^3/sec)	(ft/min)	(m/s)	(feet)	(m)
3 CGS Engines - Facility ID. 017301	62.0	18.90	500.0	533.2	17,274.0	8.2	3519.03	17.88	2.5	0.76
5 CGS Engines - Facility ID. 029110	59.0	17.98	600.0	588.71	22088.43	10.42	4499.82	22.86	2.5	0.76

SCAQMD PERMIT PROCESSING SYSTEM (PPS)

AEIS DATA SHEET

Company Name : ORANGE COUNTY SANITATION DISTRICT

Facility ID : 17301

Equipment Address : 10844 ELLIS AVE
FOUNTAIN VALLEY CA 92708

Application Number : 486760

Equipment B-Cat : 056057

Estimated Completion Date : 01/16/09

Equipment C-Cat :

Equipment Type : Basic

Equipment Description : I C E (>500 HP) NAT & DIGESTER GAS

	Emissions	
Emittants	R1 LB/HR	R2 LB/HR
CO	18.35	18.35
NOX	7.67	7.67
PM10	0.75	0.75
ROG	5.75	5.75
SOX	0.75	0.75

Applicable Rules

1110.2	02/01/2008	Emissions from Gaseous-and Liquid-fueled Engines
401	11/09/2001	Visible Emissions
402	05/07/1976	Nuisance

	Mon	Tue	Wed	Thu	Fri	Sat	Sun
Daily Start Times :	00:00	00:00	00:00	00:00	00:00	00:00	00:00
Daily Stop Times :	24:00	24:00	24:00	24:00	24:00	24:00	24:00

User's Initials : GR01 Date: 01/16/09 Supervisor's Name : CDT Review Date : 5/26/09

FACILITY PERMIT TO OPERATE
ORANGE COUNTY SANITATION DISTRICT

9. THE TOTAL HEAT INPUT OF GASEOUS FUEL, OR FUEL BLEND, BURNED IN THIS ENGINE SHALL NOT EXCEED 28.5 MM BTU PER HOUR. A LOG SHALL BE KEPT INDICATING THE TOTAL HEATING VALUE OF FUEL GAS, OR FUEL BLEND, BURNED IN THIS ENGINE BASED ON THE RECORDED FLOW RATE (SCFM) AND THE LATEST MONTHLY BTU CONTENT READING.
[RULE 1303 (b) (1) AND 1303 (b) (2)-MODELING AND EMISSIONS OFFSET]

10. THIS EQUIPMENT SHALL BE OPERATED IN COMPLIANCE WITH RULES 218, 431.1 AND 1110.2.
[RULE 218, 431.1 AND 1110.2]

11. THIS EQUIPMENT SHALL BE OPERATED IN SUCH A MANNER THAT THE FOLLOWING EMISSION RATES ARE NOT EXCEEDED.

AIR CONTAMINANT	
CARBON MONOXIDE	590 PPMV AT 15% O2
PARTICULATES (PM10)	0.0087 GRAINS/ DSCF
ROG OR TNMHC (AS CARBON)	209 PPMV AT 15% O2

[RULE 1303 (a) (1), 1303(b) (1) AND 1303 (b) (2)-BACT, MODELING AND EMISSIONS OFFSET]

12. THE COMBINED EMISSIONS FROM THE THREE (3) CGS ENGINES, USING CALENDAR MONTHLY EMISSIONS DIVIDED BY 30, SHALL NOT EXCEED THE FOLLOWING:

AIR CONTAMINANT	LBS/DAY
CARBON MONOXIDE	1321
NITROGEN OXIDES (AS NO2)	368
PARTICULATES (PM10)	36
ROG OR TNMHC (AS CH4)	276
SULFUR DIOXIDE	36

[RULE 1303 (b) (2)-EMISSIONS OFFSET]

13. THE OPERATOR SHALL INSTALL AND MAINTAIN A CONTINUOUS EMISSION MONITORING SYSTEM (CEMS), OR AN ALTERNATIVE SYSTEM, AS APPROVED BY THE EXECUTIVE OFFICER, TO MEASURE THE ENGINE EXHAUST FOR NOx AND O2 CONCENTRATIONS ON A DRY BASIS, EXCEPT DURING SHUTDOWN FOR MAINTENANCE OF THE SYSTEM. IN ADDITION, THE CEMS SHALL CONVERT THE ACTUAL NOx TO MASS EMISSION RATES; AND RECORD THE ACTUAL AND CORRECTED ENGINE NOx CONCENTRATION AT 15% O2 AND MASS EMISSION RATES ON AN HOURLY AND DAILY BASIS.
[RULE 218, RULE 1110.2]

14. THE OPERATOR SHALL CONDUCT PERFORMANCE TESTS ANNUALLY. WRITTEN NOTICE OF THE PERFORMANCE TEST SHALL BE PROVIDED TO THE AQMD AT LEAST 7 DAYS PRIOR TO THE TEST SO THAT AN OBSERVER MAY BE PRESENT. A COMPLETE FINAL REPORT OF THE TEST (LBS/HR, PPMVD AT 15% O2, LBS/MMBTU, ETC.) SHALL BE PROVIDED TO THE AQMD WITHIN 45 DAYS AFTER TESTING. ALL TEST RUNS REQUIRED BY AQMD SHALL BE REPORTED. THE TESTS SHALL INCLUDE BUT NOT BE LIMITED TO, A TEST OF THE FUELS BURNED AND ENGINE EXHAUST FOR:

A. TOTAL NON-METHANE HYDROCARBONS (EXHAUST ONLY).
B. CARBON MONOXIDE (EXHAUST ONLY)
C. TOTAL PARTICULATE MATTER (EXHAUST ONLY).
D. OXIDES OF NITROGEN (EXHAUST ONLY).

FACILITY PERMIT TO OPERATE
ORANGE COUNTY SANITATION DISTRICT

TOTAL NON-METHANE ORGANICS (EXHAUST & INLET DIGESTER GAS)
SPECIATED TRACE ORGANICS (EXHAUST, DIGESTER GAS)
TOTAL PARTICULATES (EXHAUST)
OXIDES OF NITROGEN (EXHAUST)
CARBON MONOXIDE (EXHAUST)
OXYGEN
DIGESTER GAS BTU (HHV), AND TOTAL SULFUR CONTENT (AS H2S, PPMV)

THE REPORT SHALL PRESENT THE EMISSIONS DATA IN PARTS PER MILLION (PPMV) ON A DRY BASIS, POUNDS PER HOUR, AND LBS/MMBTU.
[RULE 217, RULE 404, RULE 1146, RULE 1303(A) (1), 1303 (B) (1), 1303(B) (2) - BACT, MODELING AND OFFSET, 1401]

10. MONITORING AND TESTING OF THE BOILER SHALL BE PERFORMED ACCORDING TO RULE 1146.
[RULE 1146]

11. EMISSIONS RESULTING FROM THIS EQUIPMENT SHALL NOT EXCEED THE FOLLOWING:

POLLUTANT	POUNDS PER HOUR
CO	0.90 (0.43 WITH NATURAL GAS)
NOx	0.44 (0.17 WITH NATURAL GAS)
PM10	0.056
ROG	0.083
SOx	0.13

[RULE 404, 431.1, 1303(a) (1)-BACT, 1303(b) (2) - OFFSET]

12. THIS EQUIPMENT SHALL BE OPERATED IN COMPLIANCE WITH APPLICABLE REQUIREMENTS OF 40 CFR 63 SUBPART DDDDD.
[40 CFR 63 SUBPART DDDDD]

13. ALL RECORDS REQUIRED BY THIS PERMIT SHALL BE KEPT AND MAINTAINED FOR A MINIMUM OF FIVE YEARS AND SHALL BE MADE AVAILABLE TO AQMD PERSONNEL UPON REQUEST.
[RULE 3004 (a) (1)]

Periodic Monitoring:

14. THE OPERATOR SHALL DETERMINE COMPLIANCE WITH THE EMISSION LIMIT(S) IN CONDITION N0. 11, AT LEAST ONCE EVERY FIVE YEARS USING AQMD-APPROVED TEST METHOD. THE TEST SHALL BE CONDUCTED WHEN THE EQUIPMENT IS OPERATING UNDER NORMAL CONDITIONS. THE OPERATOR SHALL COMPLY WIT H ALL GENERAL TESTING, REPORTING, AND RECORDKEEPING REQUIREMENTS IN SECTIONS E AND K OF THIS PERMIT.
[RULE 1303 – OFFSET, 3004 (a) (4)]

South Coast Air Quality Management District

FORM 400-E-9

Engineer Report

Data	A/N:

GIVEN

RATING: 10,500,000 btu/hr.

HHV: 600 btu/cu. ft.

FUEL USAGE:

17500 cu.ft./hr.

420000 cu.ft./day

12600 cu.ft./mo.

OPERATING SCHEDULE:

24 hrs./day

7 days/wk.

30 days/mo.

52 wks./yr.

364 dys./yr.

DG?

Calculations

	EF	EF	HOURLY	DAILY	30 DAY AVE.	30 DAY NSR	ANNUAL
	lbs/mmcf	lb./mmbtu	lbs./hr.	lbs./day	lbs./day	lbs./day	lbs./yr.
ROG	7	0.0122	0.1281	3.0744	3.1062	3	1119.0816
NOx	30	0.0349	0.3665	8.7960	8.8869	9	3201.7440
SOx	40 ppm	0.0628	0.6594	15.8256	15.9891	16	5760.5184
CO	100 ppm	0.0708	0.7434	17.8416	18.0260	18	6494.3424
PM	7.5	0.0130	0.1365	3.2760	3.3099	3	1192.4640
PM10	7.5	0.0130	0.1365	3.2760	3.3099	3	1192.4640

© South Coast Air Quality Management District, Form 400-E-9a Engineer Report (2006.02)

South Coast Air Quality Management District

FORM 400-PS
PLOT PLAN AND STACK INFORMATION FORM

Mail Application To:
SCAQMD
P.O. Box 4944
Diamond Bar, CA 91765
Tel: (909) 396-3385
www.aqmd.gov

This form must be accompanied by a completed Application for a Permit to Construct/Operate -Form 400A and Form 400-CEQA

Permit to be issued to (Business name of operator to appear on permit):
Orange County Sanitation District

Address where the equipment will be operated (for equipment which will be moved to various location in AQMD's jurisdiction, please list the initial location site):
10844 Ellis Avenue, Fountain Valley, CA. 92708 ◉ Fixed Location ○ Various Locations

SECTION A: LOCATION DATA

Plot Plan
Please attach a site map for the project. Identify and locate the proposed equipment on the property. A copy of the appropriate Thomas Brothers page that shows the location, or a drawing or sketch that show the major street and identifies the location of the equipment is acceptable.

Location of School Nearby
Is the facility located within a 1/4 mile radius (1,320 feet) of the outer boundary of a school?
○ Yes ◉ No. If yes, please provide name(s) of school(s) below.

School Name	School Address	Distance from stack or equipment vent to the outer boundary of the school.

Note: Per Section 42301.9 of the California Health and Safety Code, a "school" means any public or private school used for purposes of the education of more than 12 children in kindergarten or any of grades 1 to 12, inclusive, but does not include any private school in which education is primarily conducted in

Population Density
◉ Urban (area of dense population) ○ Rural (area of sparse population)

Zoning Classification
◉ Mixed Use Residential Commercial Zone (M-U) ○ Service and Professional Zone (C-S) ○ Medium Commercial (C-3)
○ Heavy Commercial (C-4) ○ Commercial Manufacturing (C-M)

SECTION B: EMISSION RELEASE PARAMETERS -STACKS, VENTS

Stack Data
Stack Height: 42.00 feet (height above ground level)* What is the height of the closest building nearest the stack ? 30.00 feet
Stack Inside Diameter: 18.000 inches Stack Flow: 3230.00 acfm Stack Temperature: 360.00 °F
Rain Cap Present: ○ Yes ◉ No Stack Orientation: ◉ Vertical ○ Horizontal
* If the stack height is less than 2.5 times the closest building height (H), please provide information on any building within 5xH distance from the stack(attach additional sheet if necessary

Building #/name: Digester No. 8	Building #/name: Digester No. 11
Building Height: 30.00 feet	Building Height: 30.00 feet
Building Width: 90.00 feet	Building Width: 110.00 feet
Building Length: 90.00 feet	Building Length: 110.00 feet

Receptor Distance from equipment stack or roof vents/openings
Distance to nearest residence 700.00 feet or 213 m meters | Distance to nearest business 1100.0 feet or 335 meters

Building Information
Are the emissions released from vents and/or openings from the building? ○ Yes ◉ No
If yes, please provide:
Building height above ground level: ____ ft. | Building dimensions: ____ length ft. ____ width ft. or ____ Total square footage of building where the source of the emissions is located.

SECTION C: APPLICANT CERTIFICATION STATEMENT

I hereby certify that all information contained herein and information submitted with this application is true and correct.

SIGNATURE OF PREPARER:	TITLE OF PREPARER:	PREPARER'S TELEPHONE NUMBER: (714) 593-7082
	Regulatory Specialist	PREPARER'S E-MAIL ADDRESS: tahn@ocsd.com

CONTACT PERSON FOR INFORMATION ON THIS EQUIPMENT:	CONTACT PERSON'S	DATE SIGNED:
Terry Ahn	TELEPHONE NUMBER: (714) 593-7082	12/15/08
E-MAIL ADDRESS: tahn@ocsd.com	FAX NUMBER: (714) 962-8379	

CONFIDENTIAL INFORMATION
Under the California Public Records Act, all information in your permit application will be considered a matter of public record and may be disclosed to a third party. If you wish to keep certain items as confidential, please complete the following steps:
(a) Make a copy of any page containing confidential information blanked out. Label this page "public copy."
(b) Label the original page "confidential." Circle all confidential items on the page.
(c) Prepare a written justification for the confidentiality of each confidential item. Append this to the confidential copy.

© South Coast Air Quality Management District, Form 400-E-PS (2006.02)

ORANGE COUNTY SANITATION DISTRICT - Facility 29110 Sources								
Application Number	Permit Number	Permit Issued Date	Permit Status	Equipment Type	Equipment Description	Application Date	Application Status	Reference of data for Analysis / Reason for Exclusion from Analysis
480908	G2958	5/22/2009	ACTIVE	Basic	I C E (>500 HP) NAT & DIGESTER GAS	4/2/2008	PERMIT TO OPERATE GRANTED	Source not included in analysis. Change in permitting conditions for existing unit, not resulting in an increase in emissions. See correspondence with SCAQMD.
480909	G2959	5/22/2009	ACTIVE	Basic	I C E (>500 HP) NAT & DIGESTER GAS	4/2/2008	PERMIT TO OPERATE GRANTED	Source not included in analysis. Change in permitting conditions for existing unit, not resulting in an increase in emissions. See correspondence with SCAQMD.
480911	G2964	5/22/2009	ACTIVE	Basic	I C E (>500 HP) NAT & DIGESTER GAS	4/2/2008	PERMIT TO OPERATE GRANTED	Source not included in analysis. Change in permitting conditions for existing unit, not resulting in an increase in emissions. See correspondence with SCAQMD.
480912	G2966	5/22/2009	ACTIVE	Basic	I C E (>500 HP) NAT & DIGESTER GAS	4/2/2008	PERMIT TO OPERATE GRANTED	Source not included in analysis. Change in permitting conditions for existing unit, not resulting in an increase in emissions. See correspondence with SCAQMD.
480916	G2967	5/22/2009	ACTIVE	Basic	I C E (>500 HP) NAT & DIGESTER GAS	4/2/2008	PERMIT TO OPERATE GRANTED	Source not included in analysis. Change in permitting conditions for existing unit, not resulting in an increase in emissions. See correspondence with SCAQMD.
474766	F95584	2/27/2008	ACTIVE	Basic	I C E (>500 HP) EM ELEC GEN DIESEL	10/19/2007	PERMIT TO OPERATE GRANTED	Data obtained from SCAQMD Engineering Application folder.
474767	F95585	2/27/2008	ACTIVE	Basic	I C E (>500 HP) EM ELEC GEN DIESEL	10/19/2007	PERMIT TO OPERATE GRANTED	Data obtained from SCAQMD Engineering Application folder.
474768	F95586	2/27/2008	ACTIVE	Basic	I C E (>500 HP) EM ELEC GEN DIESEL	10/19/2007	PERMIT TO OPERATE GRANTED	Data obtained from SCAQMD Engineering Application folder.
474769	F95587	2/27/2008	ACTIVE	Basic	I C E (>500 HP) EM ELEC GEN DIESEL	10/19/2007	PERMIT TO OPERATE GRANTED	Data obtained from SCAQMD Engineering Application folder.
474770	F95588	2/27/2008	ACTIVE	Basic	I C E (>500 HP) EM ELEC GEN DIESEL	10/19/2007	PERMIT TO OPERATE GRANTED	Data obtained from SCAQMD Engineering Application folder.
540708				Basic	I C E (>500 HP) NAT & DIGESTER GAS	7/18/2012	ASSIGNED TO ENGINEER - CLASS III	Source not included in analysis. Change in permitting conditions for existing unit, not resulting in an increase in emissions. See correspondence with SCAQMD.
540709				Basic	I C E (>500 HP) NAT & DIGESTER GAS	7/18/2012	ASSIGNED TO ENGINEER - CLASS III	Source not included in analysis. Change in permitting conditions for existing unit, not resulting in an increase in emissions. See correspondence with SCAQMD.
540710				Basic	I C E (>500 HP) NAT & DIGESTER GAS	7/18/2012	ASSIGNED TO ENGINEER - CLASS III	Source not included in analysis. Change in permitting conditions for existing unit, not resulting in an increase in emissions. See correspondence with SCAQMD.
540711				Basic	I C E (>500 HP) NAT & DIGESTER GAS	7/18/2012	ASSIGNED TO ENGINEER - CLASS III	Source not included in analysis. Change in permitting conditions for existing unit, not resulting in an increase in emissions. See correspondence with SCAQMD.
540712				Basic	I C E (>500 HP) NAT & DIGESTER GAS	7/18/2012	ASSIGNED TO ENGINEER - CLASS III	Source not included in analysis. Change in permitting conditions for existing unit, not resulting in an increase in emissions. See correspondence with SCAQMD.
526135	G18570	6/7/2012	ACTIVE	Basic	UNSPECIFIED EQUIP/PROCESS (SCH B)	8/4/2011	PERMIT TO OPERATE GRANTED	Source not included in analysis. Information unavailable at time of analysis. Based on equipment description assumed permitted source did not result in an increase in emissions.
455673	F81556	4/12/2006	ACTIVE	Basic	I C E (50-500 HP) EM ELEC GEN-DIESEL	4/12/2006	PERMIT TO OPERATE GRANTED	Data obtained from SCAQMD Engineering Application folder for Appl #416969 and direct correspondence with SCAQMD.
455671	F81555	4/12/2006	ACTIVE	Basic	I C E (50-500 HP) EM ELEC GEN-DIESEL	4/12/2006	PERMIT TO OPERATE GRANTED	Data obtained from SCAQMD Engineering Application folder for Appl #416969 and direct correspondence with SCAQMD.
455670	F81554	4/12/2006	ACTIVE	Basic	I C E (50-500 HP) EM ELEC GEN-DIESEL	4/12/2006	PERMIT TO OPERATE GRANTED	Data obtained from SCAQMD Engineering Application folder for Appl #416969 and direct correspondence with SCAQMD.
499431				Basic	Title V Permit Revision	3/5/2009	BANKING/ PLAN GRANTED	Source not included in analysis. Administrative change only.

From: Gaurang Rawal
To: Storelli, Elizabeth/SAC
Subject: RE: Stack Parameters data request - follow-up email
Date: Thursday, January 03, 2013 10:07:25 AM

Good Morning, Beth, and wish you a Happy and Prosperous New Year.

Yes, the engines listed below (also known as CGS by OC- Central Generation System) have been permitted since 1995. There are only 5 such identical engines at the site. Over the years, each engine's permit may have been revised for various reasons (e.g. alteration/modification, change of permit conditions, compliance with new rule emissions limits, administrative change, etc), there by new permit issued under a new application and permit # .

Hope, this answers your questions. If you have any questions, pl call me.

Gaurang Rawal
(909) 396-2543

From: Elizabeth.Storelli@ch2m.com [mailto:Elizabeth.Storelli@ch2m.com]
Sent: Thursday, January 03, 2013 9:44 AM
To: Gaurang Rawal
Subject: RE: Stack Parameters data request - follow-up email

Good Morning Guarang,

I hope you had a nice holiday! I have a few follow-up questions to some of the information you provided in our correspondence below back in November.

For the OC Sanitation District Facility ID# 29110:

1. Can you please confirm that there are only 5 engines (ICE [>500 HP] NAT & DIGESTER GAS) at the facility?
2. Can you please confirm that these 5 engines were originally permitted in 1995?

Reasoning behind our questions:

In reviewing information in SCAQMD FIND, there are 10 applications for ICEs (app #'s 480908, 909, 911, 912 & 916 AND more recently: 540708 through 540712). We are assuming that the 5 most current applications (#'s: 540708 through 540712) are just modifications to the already existing engines. Can you please confirm this assumption.

Secondly, we believe that the 5 engines were permitted back in 1995 based on our review of their permits we received through SCAQMD Public Data Request process. Can you please confirm this as well. The date they were permitted is important criteria for whether or not we include them in our modeling.

Please feel free to call me if you have any questions,

Beth Storelli

CH2M HILL
2485 Natomas Park Drive, Suite 600
Sacramento, CA 95833
Office 916.286.0259
elizabeth.storelli@ch2m.com

From: Gaurang Rawal [mailto:grawal@aqmd.gov]
Sent: Thursday, November 29, 2012 9:03 AM
To: Storelli, Elizabeth/SAC
Subject: FW: Stack Parameters data request - follow-up email

Hi Beth,

Attached is the requested info.
One plant (ID 17301) has 3-identical engines and the other plant (ID 29110) has five identical engines.
Hope, this information will be helpful.

Regards,

Gaurang Rawal

From: Ahn, Terry [mailto:tahn@ocsd.com]
Sent: Thursday, November 29, 2012 8:52 AM
To: Gaurang Rawal
Cc: Kogan, Vlad
Subject: RE: Stack Parameters data request - follow-up email

Hi Gaurang,

The data in the attached file comes from the AB2588 HRA reports we submitted to SCAQMD in 2008.

If you need anything else please let me know.

Terry

From: Gaurang Rawal [mailto:grawal@aqmd.gov]
Sent: Thursday, November 29, 2012 8:36 AM
To: Ahn, Terry
Subject: FW: Stack Parameters data request - follow-up email

Terry,

Just a follow up to our conversation this morning. Below is the requested info. Thanks for your prompt attention and assistance.

Gaurang
9909) 396-2543

From: Elizabeth.Storelli@ch2m.com [mailto:Elizabeth.Storelli@ch2m.com]
Sent: Wednesday, November 28, 2012 4:46 PM
To: Gaurang Rawal
Subject: Stack Parameters data request - follow-up email

Hi Gaurang,

Thank you for speaking with me this evening. As I mentioned, we are working on a cumulative air quality analyses on the area surrounding our client's project site in Huntington Beach. We have gone through SCAQMD's FIND database as well as submitted and received information through your Public Records Request process.

We have a few outstanding pieces of information that we still need regarding facilities that you are the engineer on. Can you please provide us with the following infomration:

1. Orange County Sanitation District Facility (ID: 17301): Can you please provide the stack parameters (height(ft), diameter(ft), temp(F), velocity(FPs)) for dispersion modeling for the following Application #s: 486760, 486792, 486793
2. Orange County Sanitation District Facility District Facility (ID: 29110) Can you please provide the stack parameters (height(ft), diameter(ft), temp(F), velocity(FPs)) for dispersion modeling for the following Application #: 480908

Please feel free to call if you have any additional questions.

Thank you,

Beth Storelli

CH2M HILL
2485 Natomas Park Drive, Suite 600
Sacramento, CA 95833
Office 916.286.0259
elizabeth.storelli@ch2m.com

NSR DATA SUMMARY SHEET

Application No: 474766
Application Type: Change of Conditions
Application Status: PROCESSING
Previous Apps,Dev,Permit #: 134617, 0 - ICE-PPS, NONE

Company Name: ORANGE COUNTY SANITATION DISTRICT
Company ID: 29110
Address: 22212 BROOKHURST ST,HUNTINGTON BEACH, CA
RECLAIM: NO
RECLAIM Zone: 01
Air Basin: SC
[illegible]e: 18
Title V: NO

Device ID: 0 - ICE-PPS
Estimated Completion Date: 12-30-2007
Heat Input Capacity: 0 Million BTU/hr
Priority Reserve: NONE - No Priority Access Requested
Recommended Disposition: 31 - PERMIT TO OPERATE GRANTED
PR Expiration:
School Within 1000 Feet: NO
Operating Weeks Per Year: 50
Operating Days Per Week: 1
Monday Operating Hours: 00:00 to 01:00
Tuesday Operating Hours: 00:00 to 00:00
Wednesday Operating Hours: 00:00 to 00:00
Thursday Operating Hours: 00:00 to 00:00
Friday Operating Hours: 00:00 to 00:00
[illegible]urday Operating Hours: 00:00 to 00:00
Sunday Operating Hours: 00:00 to 00:00

Emittant: CO
BACT:
Cost Effectiveness: NO
Source Type: MAJOR
Emis Increase: 0
Modeling: N/A
Public Notice: N/A
CONTROLLED EMISSION
Max Hourly: 9.81 lbs/hr
Max Daily: 9.81 lbs/day
UNCONTROLLED EMISSION
Max Hourly: 9.81 lbs/hr
Max Daily: 39.24 lbs/day
CURRENT EMISSION
BACT 30 days Avg: 1 lbs/day
Annual Emission: 490.5 lbs/yr
District Exemption: 1304(a)(4)-10/12/1995-Emergency Equipment attainment

---

Emittant: NOX
BACT:
Cost Effectiveness: NO
Source Type: MAJOR
Emis Increase: 0
Modeling: N/A
Public Notice: N/A
CONTROLLED EMISSION
Max Hourly: 45.32 lbs/hr
Max Daily: 45.32 lbs/day
UNCONTROLLED EMISSION
Max Hourly: 45.32 lbs/hr
Max Daily: 181.28 lbs/day
CURRENT EMISSION
BACT 30 days Avg: 7 lbs/day
Annual Emission: 2266 lbs/yr
District Exemption: 1304(a)(4)-10/12/1995-Emergency Equipment

---

Emittant: PM10
BACT:
Cost Effectiveness: NO
Source Type: MINOR
Emis Increase: 0
Modeling: N/A
Public Notice: N/A
CONTROLLED EMISSION
Max Hourly: 0.82 lbs/hr
Max Daily: 3.28 lbs/day
UNCONTROLLED EMISSION
Max Hourly: 0.82 lbs/hr
Max Daily: 3.28 lbs/day
CURRENT EMISSION
BACT 30 days Avg: 0 lbs/day
Annual Emission: 164 lbs/yr
District Exemption: None

SCEC

ORANGE COUNTY SANITATION DISTRICT PLANT NO. 2 EMERGENCY DIESEL GENERATORS 2004 ENGINEERING SOURCE TEST REPORT

PREPARED FOR:
Orange County Sanitation District
Post Office Box 8127
10844 Ellis Avenue
Fountain Valley, California 92728-8127

EQUIPMENT LOCATION:
Plant No. 2
Internal Combustion Engine Emergency Diesel-Fired Generators
Huntington Beach Wastewater Treatment Facility
Huntington Beach, California

TEST DATES:
June 15-17, 2004

ISSUE DATE:
July 15, 2004

PREPARED BY:
Mr. Michael W. Bell
SCEC
1582-1 North Batavia Street
Orange, California 92867

Report No: 2061.1014.rpt1

Tested By: Michael W. Bell
Michael W. Bell

Reviewed By: Leslie A. Johnson for:
Leslie A. Johnson

TABLE 1.1
SUMMARY OF RESULTS

Parameter	Units	CAT 3512	DD 9163-7305	DD T163-7K16
Stack Heigh: Above Ground Level [1]	Ft	24.292	32.958	27.833
Stack Inside Diameter	In	11.75	12.875	15.25
Stack Flow Rate	ACFM	5,030	6,920	9,381
Stack Flow Rate @ 68 deg F, 29.92 in Hg	DSCFM	1,886	3,600	4,332
Stack Temp	Deg F	843	502	597
Stack Moisture Content	% Vol	7.4	4.7	7.0
Test Load	KW	440	386	1150
Horsepower (Rated @ Full Load)	BHP	1482	1515	2935
Horsepower (Estimated Actual Based on KW Output) [2] 44%	BHP	652	547	1688
PM Concentration [3]	gr/DSCF	0.0224	0.0169	0.0103
PM Mass Emissions [3]	Lb/Hr	0.36	0.52	0.33
PM Mass Emissions (Based on Rated BHP) [3]	Gm/BHP-Hr	0.111	0.156	0.103
PM Mass Emissions (Based on Estimated Actual BHP) [3]	Gm/BHP-Hr	0.252	0.434	0.059
O_2 Concentration	% vd	11.59	16.40	12.30
CO_2 Concentration	% vd	6.88	3.38	6.36
NO_x Concentration	ppmvd	1727	550	1356
NO_x Mass Emissions	Lb/Hr	23.33	14.18	42.08
NO_x Mass Emissions (Based on Rated BHP)	Gm/BHP-Hr	7.142	4.247	6.504
NO_x Mass Emissions (Based on Estimated Actual BHP)	Gm/BHP-Hr	16.233	11.762	11.308
CO Concentration	ppmvd	242	105	79
CO Mass Emissions	Lb/Hr	1.99	1.65	1.49
CO Mass Emissions (Based on Rated BHP)	Gm/BHP-Hr	0.609	0.493	0.231
CO Mass Emissions (Based on Estimated Actual BHP)	Gm/BHP-Hr	1.384	1.367	0.401
TGNMEO Concentration	ppmv	83.5	96.6	79.5
TGNMEO Mass Emissions	Lb/Hr	0.39	0.87	0.86
TGNMEO Mass Emissions (Based on Rated BHP)	Gm/BHP-Hr	0.120	0.259	0.133
TGNMEO Mass Emissions (Based on Estimated Actual BHP)	Gm/BHP-Hr	0.273	0.718	0.231

[1] Height was measured as best as possible; however ground level was sloped for CAT 3512 and DD 9163-7305 buildings.

[2] Horsepower is estimated based on calculated efficiency of full load generator to horsepower rating. Manufacturer curves should be utilized to more accurately determine horsepower at the test load.

[3] PM data is for the front-half (probe, nozzle and filter components). Additional PM data for the condensable fraction is provided in Appendix A.

Emittant: CO
BACT:
Cost Effectiveness: NO
Source Type: MAJOR
Emis Increase: 0
Modeling: N/A
Public Notice: N/A
CONTROLLED EMISSION
Max Hourly: 6.03 lbs/hr
Max Daily: 6.03 lbs/day
UNCONTROLLED EMISSION
Max Hourly: 6.03 lbs/hr
Max Daily: 24.12 lbs/day
CURRENT EMISSION
BACT 30 days Avg: 1 lbs/day
Annual Emission: 301.5 lbs/yr
District Exemption: None

Emittant: NOX
BACT:
Cost Effectiveness: NO
Source Type: MAJOR
Emis Increase: 0
Modeling: N/A
Public Notice: N/A
CONTROLLED EMISSION
Max Hourly: 46.74 lbs/hr
Max Daily: 46.74 lbs/day
UNCONTROLLED EMISSION
Max Hourly: 46.74 lbs/hr
Max Daily: 186.96 lbs/day
CURRENT EMISSION
BACT 30 days Avg: 7 lbs/day
Annual Emission: 2337 lbs/yr
District Exemption: None

Emittant: PM10
BACT:
Cost Effectiveness: NO
Source Type: MINOR
Emis Increase: 0
Modeling: N/A
Public Notice: N/A
CONTROLLED EMISSION
Max Hourly: 0.64 lbs/hr
Max Daily: 0.64 lbs/day
UNCONTROLLED EMISSION
Max Hourly: 0.64 lbs/hr
Max Daily: 2.56 lbs/day
CURRENT EMISSION
BACT 30 days Avg: 0 lbs/day
Annual Emission: 32 lbs/yr
District Exemption: None

From: David De Boer
To: Storelli, Elizabeth/SAC
Subject: RE: CH2M HIll - additional data request
Date: Thursday, November 29, 2012 5:25:54 PM
Attachments: ENG - Application Folder - 8-20-2010 - Fac ID; 101173 - Appl# 416969 - Permit# - Name; DETROIT DIESEL CORPORATIO.pdf

---

Hi Beth,

This attached should cover the three applications in question.

Sincerely,

David De Boer
Program Supervisor
Planning, Rule Development & Area Sources
Phone: (909) 396-2329
Fax: (909) 396-3306

Please consider the environment before printing this email.

CONFIDENTIALITY NOTICE: This e-mail message and all attachments transmitted with it may contain legally privileged and confidential information intended solely for the use of the addressee. If the reader of this message is not the intended recipient, you are hereby notified that any reading, dissemination, distribution, copying, or other use of this message or its attachments is strictly prohibited. If you have received this message in error, please notify the sender immediately by telephone (909-396-2329) or by electronic mail (ddeboer@aqmd.gov), and delete this message and all copies and backups thereof. Thank you.

From: Elizabeth.Storelli@ch2m.com [mailto:Elizabeth.Storelli@ch2m.com]
Sent: Thursday, November 29, 2012 4:31 PM
To: David De Boer
Subject: CH2M HIll - additional data request

Hi Dave,

Thank you for speaking with me this evening. As I mentioned, we are working on a cumulative air quality analyses on the area surrounding our client's project site in Huntington Beach.

Attached is our original Public Records Request. We did receive the 'ENG Application Folder' for the Appl #'s listed below, but they did not contain some information that we still need. Our Control # was 70234.

Therefore, can you please provide us with the following information for Orange County Sanitation District Facility District Facility (ID: 29110) Application #s: 455673, 455671, 455670:

- Stack parameters (height(ft), diameter(ft), temp(F), velocity(FPs))
- Emissions Data

For clarity, I inserted the table we are trying to populate:

			Stack Parameters				Emissions (lb/hr)					Annual Emissions (tpy)		
Application Number	Permit Number	Equipment Description	Stack Ht (ft)	Diameter (ft)	Temp (F)	Velocity (FPs)	Nox	CO	SO2	PM10	PM2.5	Nox	PM10	PM2.5
455673	F81556	I C E (50-500 HP) EM ELEC GEN-DIESEL												
455671	F81555	I C E (50-500 HP) EM ELEC GEN-DIESEL												
455670	F81554	I C E (50-500 HP) EM ELEC GEN-DIESEL												

Please feel free to call if you have any additional questions.

Thank you,

Beth Storelli

CH2M HILL
2485 Natomas Park Drive, Suite 600
Sacramento, CA 95833
Office 916.286.0259
elizabeth.storelli@ch2m.com

SOx:
- Compliance with sulfur content limit of 0.05% by weight is expected and will be a required permit condition.

Rule 1401: This equipment is exempted from requirements of this rule as per (g)(1)(F).

EPA Grant 105 - Operating on a standby basis, emissions from these engines will not exceed the emissions specified in the Grant 105 Memorandum dated 2-16-84.

DISCUSSION

It has been determined that the equipment will operate in compliance with all the applicable Rules and Regulations of the District.

RECOMMENDATION

Approve manufacturer's certification subject to the following permit conditions:

PERMIT CONDITIONS

Manufacturer Condition

1. THIS CERTIFIED EQUIPMENT PERMIT FOR THIS EQUIPMENT SHALL NOT RELIEVE THE PERSON CONSTRUCTING, INSTALLING OR OPERATING THE EQUIPMENT AT EACH SPECIFIC SITE FROM THE REQUIREMENT TO OBTAIN ALL NECESSARY PERMIT(S) TO CONSTRUCT AND PERMIT(S) TO OPERATE OR, FROM COMPLIANCE WITH ANY OTHER DISTRICT RULES INCLUDING THE REQUIREMENTS OF REGULATION XIII.

End User Conditions

1. OPERATION OF THIS EQUIPMENT SHALL BE CONDUCTED IN ACCORDANCE WITH ALL DATA AND SPECIFICATIONS SUBMITTED WITH THIS APPLICATION UNDER WHICH A PERMIT IS ISSUED UNLESS OTHERWISE NOTED BELOW.

2. THIS EQUIPMENT SHALL BE PROPERLY MAINTAINED AND KEPT IN GOOD OPERATING CONDITION AT ALL TIMES.

3. A TIMER SHALL BE MAINTAINED TO INDICATE THE ENGINE ELAPSED OPERATING TIME.

4. AN ENGINE OPERATING LOG LISTING THE DATE OF OPERATION, THE ELAPSED TIME, IN HOURS, AND THE REASON FOR OPERATION SHALL BE KEPT AND MAINTAINED ON FILE FOR A MINIMUM OF TWO YEARS AND MADE AVAILABLE TO DISTRICT PERSONNEL UPON REQUEST.

Application# 419969
Detriot Diesel-Model T1637M36
EPA Certified-DDX-NR9-03-02
Engine Family-3DDXL65.0GTP
2936 BPH/2190 Kw
16cyl, Diesel fuel, T/A

Engine rating (BHP)	2936
Max. Daily operation (Hrs)	3.5
Max. Month Operation (Hrs)	5.5
Average Yearly Operation (Hrs)	29

		RHC	NOX	SOx	CO	PM
E.F. (g/BHP-hr		1	6.9	0.184	8.5	0.4
g/hr		2936.0	20258.4	540.22	24956.0	1174
lbs/hr		6.47	44.66	1.19	55.02	2.59
lbs/day-Distributor's Location (30 day avg)*		0	0	0	0	0
lbs/yr-Distributors Location*		0	0	0	0	0
**To be debited to end user's location*						

End User Emission Increases		RHC	NOX	SOx	CO	PM
Gms/hr		2936.0	20258.4	540.2	24956.0	1174.4
Lbs/hr		6.47	44.66	1.19	55.02	2.59
Lbs/day (max)		23	156	4	193	9
Lbs/day (30 day average)		1	8	0	10	0
Lbs/yr		188	1295	35	1596	75

ARLON GRAPHICS L.L.C. - Facility 167066 Sources								
Application Number	Permit Number	Permit Issued Date	Permit Status	Equipment Type	Equipment Description	Application Date	Application Status	Reference of data for Analysis / Reason for Exclusion from Analysis
532299				Basic	TITLE V PERMIT RENEWAL APPLICATION	7/5/2011	BANKING/ PLAN GRANTED	Source not included in analysis. Administrative change only.
534234				Control	REGENERATIVE/RECUPERATIVE OXIDIZER-CERAMIC/HOT ROCK	3/21/2012	APPLICATION CHANGED FROM CLASS I - III	Data obtained from direct correspondence with SCAQMD and Title V permit renewal application # 532299
532302				Control	REGENERATIVE/RECUPERATIVE OXIDIZER-CERAMIC/HOT ROCK	2/14/2012	APPLICATION CHANGED FROM CLASS I - III	Source not included in analysis. Application resulted in net decrease in emissions. See correspondence with SCAQMD.
519602			ACTIVE	Control	REGENERATIVE/RECUPERATIVE OXIDIZER-CERAMIC/HOT ROCK	3/9/2011	PERMIT TO OPERATE GRANTED	Source not included in analysis. Administrative change only. See correspondence with SCAQMD.

CH2MHILL® TELEPHONE CONVERSATION RECORD

Call To: Rene Loof, Engineer, South Coast Air Quality Management District

Phone No.: (909) 396-2544 **Date:** 12/5/12

Call From: Beth Storelli **Time:** 3:40pm

Message Taken By: Beth Storelli

Subject: Source Information

Project No.: 458993.01.01

Notes:

I requested the following information from Mr. Loof:

- Need 3 applications for the RTO (thermal oxidizers): 534234, 532302, 519602
- Control # 70237 ARLON GRAPHICS L.L.C. - Facility 167066
    - Appl # 534234
    - Need stack parameters for RTO (application # 534234)

Mr. Loof provided me with the following information:

Application #534234:
Flow: 57,500 scf
Ht: 25 ft
Dia: 52 inches
Temp: 195 F

Application #532302: This application was a change of conditions to make it more of a standby RTO. He had to go back to an application from Nov 29, 1995 (App #: 348436) to provide me with the following information:

Flow: 57,500 scf
Ht: 25 ft
Dia: 52 inches
Temp: 195 F

Application #519602: Mr. Loof did not have this application. According to FIND, this application was for Change of Ownership, so would not be applicable for us. Mr. Loof mentioned that 532302 could have replaced 519602.

If we want the whole application/permits, we would need to go back through the Public Request process.

Contaminant	C28 RTO 30 day average	C4 coating 30 day average	C4 afterburner 30 day average	Delta
ROG*	0	0.216	0	0
NOx	19.87	1.20	23.8	-2.73
Sox	0.17	0.03	0.15	+0.05
CO	12.21	2.288	6.4	+8.09
PM10	1.54	0.231	1.371	+0.4

*the facility operates under a VOC cap and the operation of the new line will be kept under the facility VOC limit.

Risk Assessment:

Application 534232 Device C28 (new RTO)

This equipment passes Tier 2 Screen Risk Assessment for the combustion emissions from the new RTO with the following results:

Tier 2 results:

MICR	Residential	Commercial
	ASI	ASI
	1.25E-08	1.04 E-08
	Passes	Passes

The Hazard Index had no cumulative impact that exceeded 1.0 for the target organs for Acute or Chronic.

Application 532302 Device C4 (existing Afterburner)

This equipment is having its exhaust modified to accommodate the new C4 coating line. It is limited to 25,000 cfm and will not see an increased capacity. C4 will be conditioned so that it can only vent two lines at anytime. The modification will not cause an increase in toxic emissions and is exempt from the requirements of Rule 1401 pursuant to 1401(g)(1)(B) "Modifications with no increase in risk."

Application 532300 Device D26 & D27 (existing Prime Coating Line)

This application has been submitted as a change of condition to change the reporting method for triethylamine(TEA) usage. Originally the facility reported total gallons of material that included a diluted concentrated which contained TEA. They are requesting to report only TEA usage. Condition C1.3 will change from 16,560 gallons per month of materials containing TEA to 580 pounds per month of TEA. The content restriction of TEA in B59.3 will be removed. There will be no increase in TEA therefore this change of condition is exempt from the requirements of Rule 1401 pursuant to 1401(g)(1)(B).

Application 534234 Device D30 & D31 (New Vinyl Coating Line C4)

The new coating line will use the following hazardous materials:

Contaminant	Annual Controlled	Hourly
Ethylbenzene	3.0 lbs/yr	3.434E-04
Xylene	6,337	0.725

Attachment DR11-3
Summary of Dispersion Modeling Parameters and Results

ATTACHMENT DR11-3

Cumulative Dispersion Modeling Information

Tables presented in this attachment are as follows:

Table DR11-3.1	Cumulative Modeling Parameters - Stack Parameters
Table DR11-3.2	Cumulative Modeling Parameters – Emission Rates
Table DR11-3.3	Cumulative Modeling Results Summary
Figure DR11-3.1	AERMOD Cumulative Model Setup
Figure DR11-3.2	Cumulative Receptor Grids

Huntington Beach Energy Project
Attachment DR11-3
Table DR11-3.1
Cumulative Modeling Parameters - Stack Parameters
January 2013

Point Sources

Facility	Source ID	Easting (X) (m)	Northing (Y) (m)	Base Elevation (m)	Stack Height (m)	Temperature (K)	Exit Velocity (m/s)	Stack Diameter (m)
HBEP (1-hr NO2, CO)	Stack 1	409185	3723252	3.7	36.6	461	15.4	5.49
	Stack 2	409216	3723231	3.7	36.6	461	15.4	5.49
	Stack 3	409245	3723210	3.7	36.6	461	15.4	5.49
	Stack 4	409522	3723157	3.7	36.6	461	15.4	5.49
	Stack 5	409522	3723194	3.7	36.6	461	15.4	5.49
	Stack 6	409522	3723230	3.7	36.6	461	15.4	5.49
HBEP (SO2, 24-hr PM10, 24-hr PM2.5)	Stack 1	409185	3723252	3.7	36.6	455	21.8	5.49
	Stack 2	409216	3723231	3.7	36.6	455	21.8	5.49
	Stack 3	409245	3723210	3.7	36.6	455	21.8	5.49
	Stack 4	409522	3723157	3.7	36.6	455	21.8	5.49
	Stack 5	409522	3723194	3.7	36.6	455	21.8	5.49
	Stack 6	409522	3723230	3.7	36.6	455	21.8	5.49
HBEP (Annual NOx)	Stack 1	409185	3723252	3.7	36.6	471	23.6	5.49
	Stack 2	409216	3723231	3.7	36.6	471	23.6	5.49
	Stack 3	409245	3723210	3.7	36.6	471	23.6	5.49
	Stack 4	409522	3723157	3.7	36.6	471	23.6	5.49
	Stack 5	409522	3723194	3.7	36.6	471	23.6	5.49
	Stack 6	409522	3723230	3.7	36.6	471	23.6	5.49
HBEP (annual PM10, annual PM2.5)	Stack 1	409185	3723252	3.7	36.6	460	16.7	5.49
	Stack 2	409216	3723231	3.7	36.6	460	16.7	5.49
	Stack 3	409245	3723210	3.7	36.6	460	16.7	5.49
	Stack 4	409522	3723157	3.7	36.6	460	16.7	5.49
	Stack 5	409522	3723194	3.7	36.6	460	16.7	5.49
	Stack 6	409522	3723230	3.7	36.6	460	16.7	5.49
OC Sanitation 1	OC11	412725	3728250	7.7	18.9	533	17.9	0.76
	OC12	412725	3728250	7.7	12.8	455	9.3	0.46
OC Sanitation 2	OC22	411100	3722400	1.6	8.5	587	33.9	0.39
Arlon Graphics	AG	414875	3730325	13.5	7.6	364	24.5	1.32

Huntington Beach Energy Project
Attachment DR11-3
Table DR11-3.2
Cumulative Modeling Parameters - Emission Rates
January 2013

Emission Rates for 1-hr, 3-hr, 8-hr, and 24-hr Modeling

Source ID	1-hr NO_2		1-hr CO		8-hr CO		1-hr SO_2		3-hr SO_2		24-hr SO_2		24-hr PM_{10}		24-hr $PM_{2.5}$	
	(g/s)	(lb/hr)	(g/s)	(lb/hr)	(g/s)	(lb/hr)	(g/s)	(lb/hr)	(g/s)	(lb/hr)	(g/s)	(lb/hr)	(g/s)	(lb/hr)	(g/s)	(lb/hr)
Stack 1	3.21	25.5	14.5	115	5.72	45.4	0.31	2.45	0.31	2.45	0.31	2.45	1.20	9.50	1.20	9.50
Stack 2	3.21	25.5	14.5	115	5.72	45.4	0.31	2.45	0.31	2.45	0.31	2.45	1.20	9.50	1.20	9.50
Stack 3	3.21	25.5	14.5	115	5.72	45.4	0.31	2.45	0.31	2.45	0.31	2.45	1.20	9.50	1.20	9.50
Stack 4	3.21	25.5	14.5	115	5.72	45.4	0.31	2.45	0.31	2.45	0.31	2.45	1.20	9.50	1.20	9.50
Stack 5	3.21	25.5	14.5	115	5.72	45.4	0.31	2.45	0.31	2.45	0.31	2.45	1.20	9.50	1.20	9.50
Stack 6	3.21	25.5	14.5	115	5.72	45.4	0.31	2.45	0.31	2.45	0.31	2.45	1.20	9.50	1.20	9.50
OC11	2.90	23.01	6.94	55.1	6.94	55.1	0.28	2.25	0.28	2.25	0.28	2.25	0.28	2.25	0.28	2.25
OC12	0.03	0.22	0.11	0.90	0.11	0.90	0.016	0.13	0.016	0.13	0.016	0.13	0.007	0.056	0.0071	0.056
OC22	-	-	-	-	2.60	20.6	-	-	0.15	1.19	0.019	0.15	0.041	0.32	0.041	0.32
AG	-	-	0.042	0.34	0.042	0.34	0.00026	0.0021	0.00026	0.0021	0.00026	0.0021	0.0021	0.017	0.0021	0.017

Emission Rates for Annual Modeling

Source ID	Annual NO_2		Annual PM_{10}		Annual $PM_{2.5}$	
	(g/s)	(tpy)	(g/s)	(tpy)	(g/s)	(tpy)
Stack 1	1.18	40.9	0.52	18.0	0.52	18.0
Stack 2	1.18	40.9	0.52	18.0	0.52	18.0
Stack 3	1.18	40.9	0.52	18.0	0.52	18.0
Stack 4	1.18	40.9	0.52	18.0	0.52	18.0
Stack 5	1.18	40.9	0.52	18.0	0.52	18.0
Stack 6	1.18	40.9	0.52	18.0	0.52	18.0
OC11	1.93	67.2	0.19	6.57	0.19	6.57
OC12	0.046	1.60	0.017	0.60	0.017	0.60
OC22	0.15	5.38	0.0049	0.17	0.0049	0.17
AG	-	-	0.0021	0.073	0.0021	0.073

Huntington Beach Energy Project
Attachment DR11-3
Table DR11-3.3
Cumulative Modeling Results Summary
January 2013

Source Group	Year	NO_2 (µg/m^3)		CO (µg/m3)		SO_2 (µg/m3)			PM_{10} (µg/m3)		$PM_{2.5}$ (µg/m3)	
		1-hr	Annual	1-hr	8-hr	1-hr	3-hr	24-hr	24-hr	Annual	24-hr	Annual
ALL	2005	17.2	1.36	101	39.0	2.10	3.62	0.66	2.26	0.45	2.26	0.45
	2006	28.1	1.41	159	46.7	2.19	3.26	0.61	1.86	0.42	1.86	0.42
	2007	28.4	1.13	161	33.9	2.13	2.70	0.73	2.81	0.33	2.81	0.33
HBEP	2005	17.2	0.86	101	23.8	1.41	1.19	0.58	2.24	0.44	2.24	0.44
	2006	28.1	0.81	159	22.4	1.55	1.25	0.47	1.83	0.41	1.83	0.41
	2007	28.4	0.62	161	30.9	2.13	1.56	0.72	2.80	0.32	2.80	0.32
OC1	2005	15.9	1.13	48.2	36.0	2.10	1.66	0.61	0.58	0.13	0.58	0.13
	2006	16.7	1.18	50.5	26.5	2.18	1.54	0.57	0.54	0.14	0.54	0.14
	2007	15.8	0.94	47.8	22.0	2.10	1.46	0.60	0.58	0.11	0.58	0.11
OC2	2005	-	0.32	-	39.0	-	3.62	0.225	0.490	0.010	0.490	0.010
	2006	-	0.34	-	46.5	-	3.26	0.173	0.376	0.011	0.376	0.011
	2007	-	0.26	-	33.9	-	2.70	0.180	0.391	0.008	0.391	0.008
AG	2005	-	-	0.44	0.32	0.0027	0.0025	0.0010	0.0080	0.0033	0.0080	0.0033
	2006	-	-	0.48	0.36	0.0030	0.0026	0.0011	0.0090	0.0031	0.0090	0.0031
	2007	-	-	0.58	0.30	0.0036	0.0029	0.0010	0.0083	0.0025	0.0083	0.0025

Huntington Beach Energy Project
Attachment DR11-3
Figure DR11-3.1
January 2013
Cumulative Model Setup

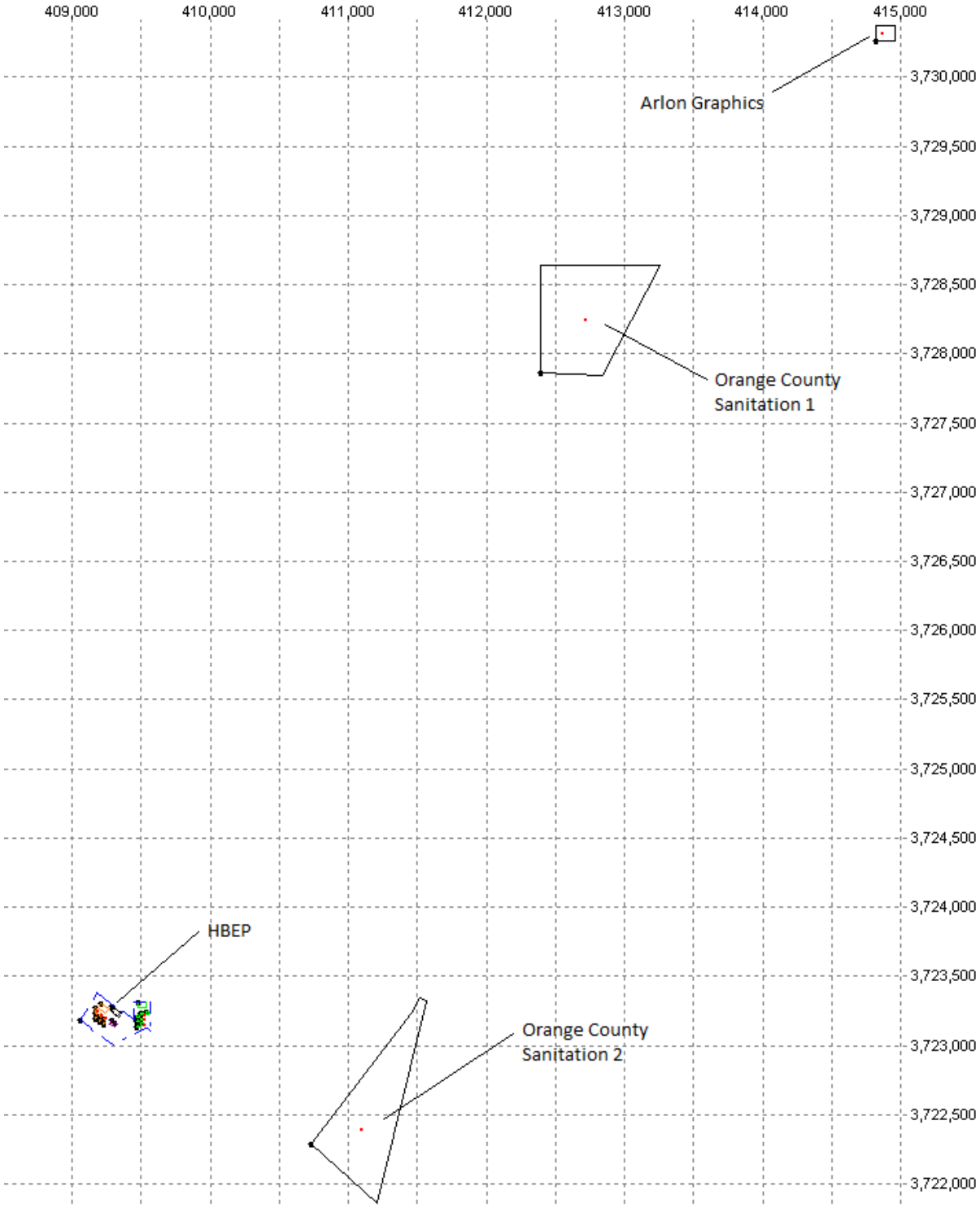

Huntington Beach Energy Project
Attachment DR11-3
Figure DR11-3.2
January 2013
Cumulative Receptor Grids

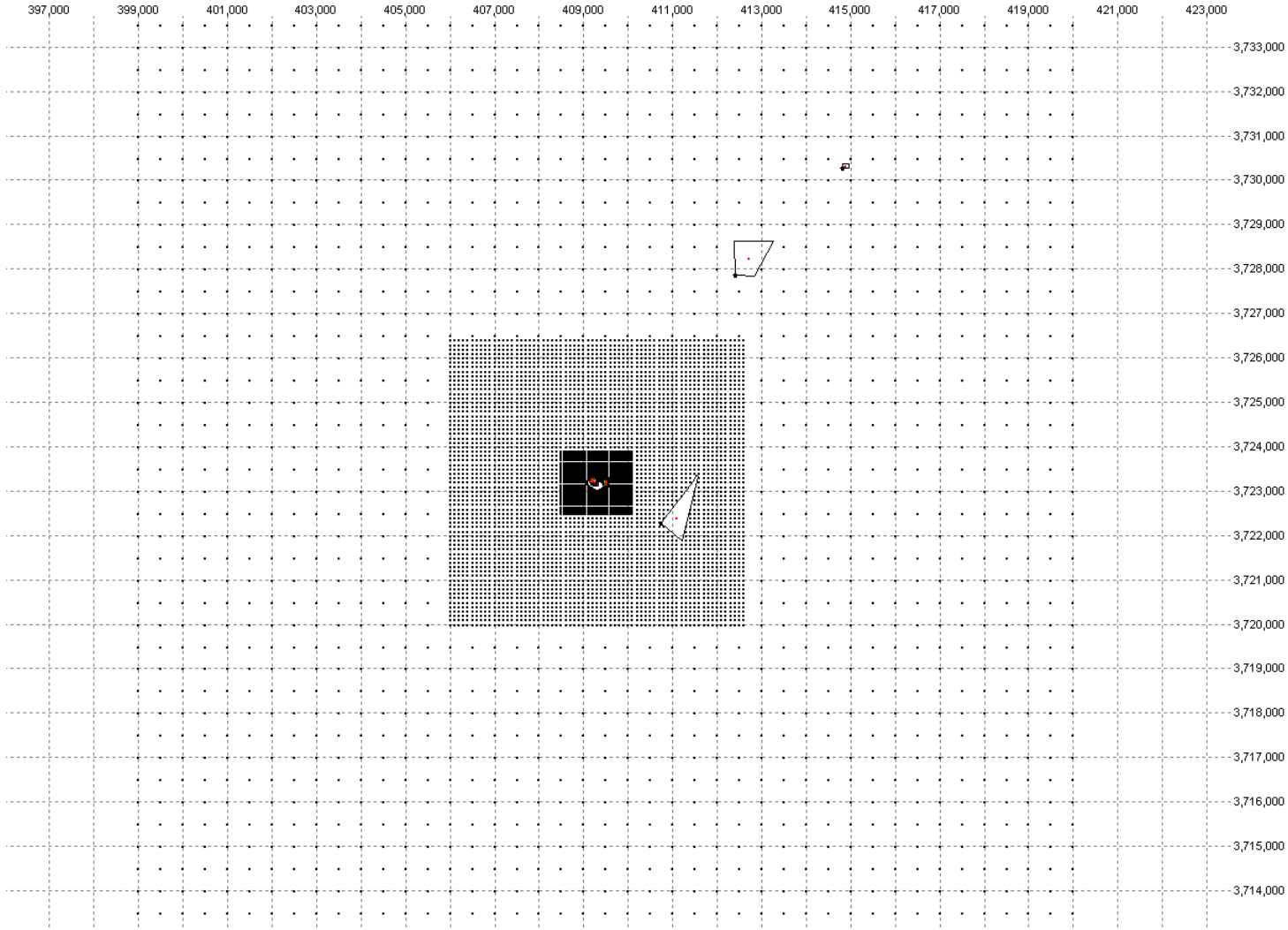

Biological Resources

BACKGROUND

The AFC (Section 5.2.3.3.1) states that the critical load for atmospheric nitrogen deposition into coastal wetlands is difficult to establish because wetlands subject to tidal exchange have open nutrient cycles. It further states that nitrogen loading in wetlands is often affected by sources other than atmospheric deposition. In addition, it states that air pollution controls limit emissions of oxides of nitrogen and that RECLAIM puts a cap on region wide NOx emissions. The section concludes that the HBEP nitrogen deposition impacts are not expected to contribute significantly to nitrogen loading on coastal salt marshes. However, there is no discussion of the relative location of the proposed project and sensitive habitats that could be affected by nitrogen emissions from HBEP nor is there a quantitative analysis of nitrogen deposition impacts.

Background data that could be used in conjunction with nitrogen deposition modeling for the HBEP could be established using available resources such as the California Energy Commission publication *Assessment of Nitrogen Deposition: Modeling and Habitat Assessment* (CEC-500-2006-032, March 2007). However, because no nitrogen deposition modeling was performed for the HBEP, this step is still needed and the qualitative information provided in the AFC does not support the applicant's conclusion that nitrogen deposition from HBEP emissions would have no impacts on coastal salt marshes. Energy Commission staff believes that nitrogen deposition resulting from emissions from the proposed HBEP, namely nitrogen oxides (NO_x) and ammonia (NH_3) could have negative impacts on biological resources and that a quantitative analysis of such impacts is needed.

Impacts of excessive nitrogen deposition to plant communities include direct toxicity, changes in species composition among native species and enhancement of non-native invasive species. The increased dominance and growth of invasive annual grasses is especially prevalent in low-biomass vegetation communities that are naturally nitrogen-limited, such as salt marshes. Invasive non-native vegetation, enhanced by atmospheric nitrogen deposition, affects these species by outcompeting them for space, sunlight, moisture, and nutrients. The salt marshes fringing estuaries intercept a substantial part of the land-derived nitrogen load and thus protect other components of estuaries from eutrophication; loss of these fringing marshes would therefore have wider consequences. Additionally, southern coastal salt marsh, southern coast live oak woodland, and southern dune scrub located in the vicinity of the project site could potentially be impacted by nitrogen deposition contributed by the HBEP. The anticipated nitrogen emissions may contribute to the ongoing (cumulative) degradation of sensitive species habitat located near the project site.

In order to assess impacts to nitrogen-sensitive biological resources, staff requires additional information on nitrogen deposition as established by proper modeling of nitrogen emissions resulting from the HBEP.

DATA REQUEST

23. Please quantify the existing baseline total nitrogen deposition rate in the vicinity of the HBEP in kilograms per hectare per year (kg/ha/yr). The geographical extent of the nitrogen deposition mapping should be directed by the results, i.e. extend geographically to where the deposition is considered below any stated threshold of significance for vegetation communities. Conduct a literature review to identify appropriate thresholds. Thresholds for nitrogen deposition by vegetation type are available within the March 2007 California Energy Commission PIER report, titled "Assessment of Nitrogen Deposition: Modeling and Habitat Assessment," available at: http://www.energy.ca.gov/2006publications/CEC-500-2006-032/CEC-500-2006-032.PDF, and the May 2007 California Energy Commission PIER report, titled "Impacts of Nitrogen Deposition on California Ecosystems and Biodiversity, available at:

http://www.energy.ca.gov/2005publications/CEC-500-2005-165/CEC-500-2005-165.PDF. Please include references and guidelines used in your baseline analyses.

Response: Based on nitrogen deposition rates presented in the California Energy Commission's *Impacts of Nitrogen Deposition on California Ecosystem and Biodiversity*,[2] the background nitrogen deposition rates in the South Coast Air Basin ranges from 1 or 2 kg-N ha^{-1} yr^{-1} along the coastline to 21 kg-N ha^{-1} yr^{-1} in the Central Los Angeles Basin. The Applicant estimates that the existing baseline nitrogen deposition rates near the project site are less than or equal to 2 kg-N ha^{-1} yr^{-1} because the HBEP project and neighboring biological resource areas are within 5 kilometers of the coastline.

The Applicant conducted a literature review to identify critical load (CL) rates for the various biologically sensitive communities within 6 miles of HBEP. The CL rates presented in Table DR23-1 were compiled based on information contained in the *Effects of Nitrogen Deposition and Empirical Nitrogen Critical Loads for Ecoregions of the United States* paper (Pardo et al., 2011), *Regional and Global Concerns over Wetlands and Water Quality* (Verhoeven et al., 2006), and *Empirical Nitrogen Critical Loads for Natural and Semi-natural Ecosystems: 2002 Update* (Bobbink et al., 2003). The CL is defined as "the deposition of a pollutant below which no detrimental ecological effect occurs over the long term according to present knowledge" and is reported as a flux with the following units, kg ha^{-1} yr^{-1} (Pardo et al., 2011).

TABLE DR23-1
Critical Loads of Nitrogen for the California Mediterranean Ecoregion and Wetlands

Habitat Type[a]	CL for N deposition (kg N ha^{-1} yr^{-1})[b,c,d]	Sensitive Natural Communities and Critical Habitat[e]	Wetlands and Protected Areas[f]
Chaparral	4–10[b]	—	Laguna Coast Wilderness Park
Coastal sage scrub	7.8–10[b]	Coastal California gnatcatcher	Bommer Canyon Open Space Preserve, Laguna Coast Wilderness Park, San Joaquin Freshwater Marsh Reserve, Talbert Nature Preserve, USACE Salt Marsh Restoration
Coastal dunes	10–20[e]	Southern foredunes, southern dune scrub	Bolsa Chica Ecological Reserve, Huntington Beach Wetlands Conservancy, Talbert Nature Preserve
Freshwater marsh/wetland	2.7–13[b]	—	San Joaquin Freshwater Marsh Reserve
Intertidal salt marshes	63–400[b]	Southern coastal marsh; Western snowy plover	Seal Beach National Wildlife Refuge
Intertidal wetlands	50–100[b]	Southern coastal marsh	Bolsa Chica Ecological Reserve, Huntington Beach Wetlands Conservancy, Talbert Nature Preserve, Seal Beach National Wildlife Refuge, USACE Salt Marsh Restoration, Upper Newport Bay Ecological Reserve/Nature Preserve
Oak woodlands	4–10[b]	—	Bommer Canyon Open Space Preserve, Laguna Coast Wilderness Park
Serpentine grassland	6[b]	—	Bommer Canyon Open Space Preserve, Laguna Coast Wilderness Park, Talbert Nature Preserve

[2] California Energy Commission. 2006. *Impacts of Nitrogen Deposition on California Ecosystem and Biodiversity*. CEC-500-2005-165.

TABLE DR23-1
Critical Loads of Nitrogen for the California Mediterranean Ecoregion and Wetlands

Habitat Type[a]	CL for N deposition (kg N ha^{-1} yr^{-1})[b,c,d]	Sensitive Natural Communities and Critical Habitat[e]	Wetlands and Protected Areas[f]
Riparian forest	20-155[c]	Southern cottonwood willow riparian forest[g]	Laguna Coast Wilderness Park

[a]Habitat types listed in this column were obtained from literature.

[b]Pardo L. H., M. E. Fenn, C. L. Goodale, L. H. Geiser, and C. T. Driscoll. 2011. Effects of nitrogen deposition and empirical nitrogen critical loads for ecoregions of the United States. *Ecological Applications* 21:3049-3082 and references therein unless noted otherwise. The freshwater wetlands CL are from wetlands in northeastern U.S. and Canada.

[c]Verhoeven, J. T. A., B. Arheimer, Y. Chengquing, and M. M. Hefting. 2006. Regional and global concerns over wetlands and water quality. *TRENDS in Ecology and Evolution* 21(2):96-103.

[d]Bobbink, R., M. Ashmore, S. Braun, W. Flückiger, and I. J. J. Van den Wyngaert. 2003. Empirical nitrogen critical loads for natural and semi-natural ecosystems: 2002 update. In: B. Achermann and R. Bobbink (Eds.), *Empirical Critical Loads For Nitrogen - Proceedings SAEFL*. Berne, pp. 43-171.

[e]Corresponding sensitive natural communities and critical habitat found within 10 miles of the HBEP.

[f]Corresponding significant regional wetlands, protected areas, sensitive natural communities and critical habitat that were identified within 10 miles of the HBEP.

[g]The Southern Cottonwood Willow Riparian Forest habitat that was listed in Figure 5.2-2 of the AFC was not included in this analysis because the data were obtained from a historical record and this riparian community has been extirpated (CDFG, 2012a; reference is listed in the AFC).

DATA REQUEST

24. Please use AERMOD or an equivalent model to provide an analysis of impacts due to total nitrogen deposition from operation of the HBEP. The analysis should specify the amount of total nitrogen deposition in kg/ha/yr at the Huntington Beach Wetlands Conservancy's Coastal Marsh Restoration Complex, the U.S. Army Corps of Engineers (USACE) Salt Marsh Restoration project, the Talbert Nature Preserve, the Bolsa Chica Ecological Reserve, and the Seal Beach National Wildlife Refuge and any other special status habitats, vegetation types, and critical habitat for wet and dry deposition. Please provide the complete citation for references used in determining this number

Response: The wet and dry nitrogen deposition resulting directly from depositional nitrogen emissions from the six combustion turbines at the proposed HBEP were evaluated using AERMOD (version 12060). AERMOD is considered a conservative model for this analysis as it is a steady-state Gaussian plume dispersion model and does not calculate the complex chemical transformations and equilibria associated with nitrogen deposition.

Several additional conservative assumptions were used in the modeling with regard to nitrogen formation and deposition:

- 100 percent conversion of nitrogen oxides (NO_x) and ammonia (NH_3) into atmospherically derived nitrogen (ADN) within the turbine stacks rather than allowing for the conversion of NO_x and NH_3 to occur over distance and time within the atmosphere, which would be more realistic.
- Depositional rates and parameters were based upon nitric acid (HNO_3) which, of all the depositing species, has the highest affinity for impacts to soils and vegetation and tendency to stick to what it is deposited on.
- Maximum settling velocities were selected to produce conservative deposition rates
- Maximum potential emissions for the HBEP facility were assumed to occur each year.

- The approach assumes no net benefit from the discontinuation of the existing boilers at the Huntington Beach Generating Station. Huntington Beach Generating Station Units 3 and 4 were recently shut down and Units 1 and 2 will be shutdown prior to completion of the project.

Emissions

Emissions of depositional nitrogen were conservatively calculated as a complete conversion of in-stack NO_x and ammonia (NH_3) from each of the six combustion turbines. This was done by multiplying the nitrogen mass fraction of each of the pollutants by the respective average annual emissions. For example, the mass fraction of nitrogen (14 g/mol) in NO_x (as NO_2, 46 g/mol) is 0.304, while the mass fraction of nitrogen in NH_3 (17 g/mol) is 0.824.[3] Table DR24-1 presents the emissions for each combustion turbine.

TABLE DR24-1
HBEP Average Annual Depositional Nitrogen Emissions (per turbine)

NO_x Emissions (tpy)	NH_3 Emissions (tpy)[a]	Depositional Nitrogen from NO_x (tpy)[b]	Depositional Nitrogen from NH_3 (tpy)	Total Depositional Nitrogen (tpy)
40.4	16.0	12.3	13.2	25.6

[a]Average annual NH_3 assumed to be 2.5 ppmv (see footnote below).
[b]Molecular weight of NO_x calculated as NO_2.

Model Setup

The AERMOD model setup for the nitrogen deposition modeling was based on the same source locations and stack parameters identified for the annual NO_2 modeling included in HBEP AFC Appendix 5.1C (12-AFC-02). Receptor grids were developed for each of the wetland areas identified in Data Request 24, with receptors located at 25-meter increments along the perimeter of each of the wetland areas and Cartesian-grid receptors spaced at 100-meter increments within the wetland areas.

AERMOD also requires additional depositional parameters in order to model wet and dry deposition, which are discussed below.

Deposition Parameters:
The dry deposition algorithms in AERMOD include land use characteristics and some dry gas deposition resistance terms based on five seasonal categories and nine land use categories. The seasonal categories used for each month of modeling are as follows:

- Midsummer: April, May, June, and July
- Autumn: August, September, and October
- Late Autumn/Winter without snow: November, December, and January
- Transitional Spring: February and March

Land use categories are used within AERMOD to calculate dry deposition of the emitted nitrogen compounds. For example, in areas of lush vegetation, the gaseous nitrogen compounds would have a higher uptake and, therefore, dry deposition would be higher at these areas than in bodies of water or urban areas with fewer trees. The land use categories used in the analysis were determined for each 10 degree increment within a 3-kilometer-radius area surrounding HBEP, with 0 degrees representing due north, and are as follows:

- Suburban areas, grassy: Sectors 1–14 and 30–36
- Bodies of water: Sectors 15–29

[3] The Applicant has requested a maximum allowable ammonia emission concentration of 5 parts per million by volume but the ammonia emissions are expected to be significantly lower than the allowable limit as the catalyst will be in a new, clean condition and catalyst efficiency will be at its highest. However, as the selective catalyst reduction (SCR) system degrades, the ammonia emissions will increase to a point where catalyst replacement is required. The SCR degradation is measured periodically and the rate of degradation can be predicted so that catalyst replacement can be scheduled to avoid exceeding the allowable NOx or ammonia emission limitations. As a result, the replacement of the catalyst occurs well before the ammonia emissions reach the maximum allowable concentration. Therefore, a median point in the range of ammonia emissions was assumed to estimate the annual nitrogen deposition due to the ammonia emissions.

AERMOD also requires the input of wet and dry depositional parameters based on the nitrogen-containing species being emitted. For this analysis, it was conservatively assumed that all nitrogen emitted was in the form of nitric acid because nitric acid is the most depositionally aggressive species. The depositional parameters are as follows:

- Diffusivity in Air: 0.1628 cm^2/s
- Diffusivity in Water: 2.98×10^{-5} cm^2/s
- Cuticular Resistance Term: 1.0×10^{5} s/cm
- Henry's Law Coefficient: 8.0×10^{-8} Pa m^3/mol

Lastly, AERMOD requires hourly inputs of precipitation code, precipitation amount, relative humidity, and surface pressure that were not included in the preprocessed AERMET meteorological data available from the SCAQMD. Therefore, supplemental AERMET data were required to complete the analysis. The John Wayne Airport station is the nearest National Weather Service surface station with data available for the same time period as the SCAQMD Costa Mesa AERMET meteorological data used in HBEP's air dispersion modeling assessment. Furthermore, the John Wayne Airport is located approximately 5 kilometers west of the Costa Mesa meteorological station the SCAQMD used to prepare the Costa Mesa AERMET data set. The proximity of these two meteorological stations provides representative hourly meteorological conditions needed for use in the nitrogen deposition modeling assessment. The parameters from the John Wayne Airport surface station were then inserted into the SCAQMD AERMET dataset.

Model Results

The maximum modeled annual deposition over 3 years was combined with a conservative estimated background deposition rate of 2 kg $N \cdot ha^{-1}$ yr^{-1} and compared to the CL for nitrogen deposition for each of the habitat types present in the wetland areas. As previously noted in Table DR23-1, the Southern Cottonwood Willow Riparian Forest habitat that were listed in Figure 5.2-2 of the AFC was not included in this analysis because the data was obtained from a historical record and this riparian community has been extirpated (CDFG, 2012a; reference is listed in the AFC).

The results of the deposition modeling are shown in Table DR24-2. In each case the maximum predicted nitrogen deposition was less than the CL deposition. Therefore, even with the use of the conservative methodology for estimating nitrogen deposition noted previously, any contribution of nitrogen deposition from HBEP would have a less-than-significant impact on sensitive species habitat located near the project site.

The dispersion modeling files, which include input and output files used in the analysis, have been submitted herewith on CD. The maximum predicted nitrogen deposition and location within each of the sensitive areas are also identified in the following data response (Figure DR25-1 and Figure DR25-2).

TABLE DR24-2
Comparison of the Predicted HBEP N Deposition Flux to the Critical Loads of Nitrogen for the California Mediterranean Ecoregion and Wetlands

Habitat type	Maximum Predicted N Deposition Rate (kg $N \cdot ha^{-1}$ yr^{-1})	Background N Deposition Rate (kg $N \cdot ha^{-1}$ yr^{-1})	Total Predicted N Deposition Rate* (kg $N \cdot ha^{-1}$ yr^{-1})	CL for N Deposition (kg $N \cdot ha^{-1}$ yr^{-1})	Location of Maximum Predicted Deposition (i.e. Name of Wetland and/or Protected Area)
Chaparral	0.2	2	2.2	4–10	Laguna Coast Wilderness Park
Coastal sage scrub	1.4	2	3.4	7.8–10	Talbert Nature Preserve
Coastal dunes	3.0	2	5.0	10–20	Huntington Beach Wetlands Conservancy
Freshwater marsh/wetland	0.4	2	2.4	2.7–13	San Joaquin Freshwater Marsh Reserve
Intertidal salt marshes	0.2	2	2.2	63–400	Seal Beach National Wildlife Refuge

TABLE DR24-2
Comparison of the Predicted HBEP N Deposition Flux to the Critical Loads of Nitrogen for the California Mediterranean Ecoregion and Wetlands

Habitat type	Maximum Predicted N Deposition Rate (kg N·ha^{-1} yr^{-1})	Background N Deposition Rate (kg N·ha^{-1} yr^{-1})	Total Predicted N Deposition Rate* (kg N·ha^{-1} yr^{-1})	CL for N Deposition (kg N·ha^{-1} yr^{-1})	Location of Maximum Predicted Deposition (i.e. Name of Wetland and/or Protected Area)
Intertidal wetlands	3.0	2	5.0	50–100	Huntington Beach Wetlands Conservancy
Oak woodlands	0.2	2	2.2	4–10	Bommer Canyon Open Space Preserve
Serpentine grassland	1.4	2	3.4	6	Talbert Nature Preserve
Riparian forest	0.2	2	2.2	20-155	Laguna Coast Wilderness Park

*The total predicted N deposition is the sum of the estimated background deposition rate of 2 kg N·ha^{-1} yr^{-1} plus the maximum predicted deposition rate.

DATA REQUEST

25. Please provide an isopleth graphic over USGS 7.5-minute maps (or equally detailed map) of the direct nitrogen deposition rates caused by the project. This will be a graphical depiction of the projects' nitrogen deposition.

Response: The predicted nitrogen deposition flux isopleths are included in Figures DR25-1 and DR25-2.

DATA REQUEST

26. Please provide a comprehensive cumulative impact analysis for the direct nitrogen deposition in kg/ha/yr caused by HBEP. Provide an isopleths graphic over USGS 7.5-minute maps of the direct nitrogen deposition values in the cumulative analysis and specify the cumulative nitrogen deposition rate in kg/ha/yr at any affected special status habitat, vegetation type, or critical habitat. The geographical extent of the cumulative nitrogen deposition mapping should be directed by the results, i.e. extend geographically to where the deposition is considered below any stated threshold of significance.

Response: The sources included in the cumulative nitrogen deposition analysis are the same NOx emitting sources identified in the response to Data Request 11. Similar to the HBEP sources, emissions of depositional nitrogen were conservatively calculated as a complete conversion of in-stack NO_x from each source. Emissions of ammonia from the cumulative sources were considered negligible and therefore were not considered as a source of depositional nitrogen. Emissions from each source are shown in Table DR26-1.

TABLE DR26-1
Cumulative Source Depositional Nitrogen Emissions

Source Description	NO_x Emissions (tpy)	Depositional Nitrogen from NO_x (tpy)*
Orange County Sanitation District (Facility ID 17301)		
Boiler	1.60	0.49
Digester Gas ICEs (3)	67.2	20.4
Orange County Sanitation District (Facility ID 29110)		
Emergency Diesel ICEs (8)	5.38	1.64

*Molecular weight of NOx calculated as NO2.

Model Setup

The cumulative nitrogen deposition analysis was performed using the same model settings and receptor grid outlined in the response to Data Request 24. Stack parameters for the cumulative sources are included in the response to Data Request 11.

Model Results

The maximum modeled annual deposition over 3 years was combined with an estimated background deposition rate of 2 kg N·ha^{-1} yr^{-1} and compared to the CL for nitrogen deposition for each of the habitat types present in the sensitive areas. The results of the deposition modeling are shown in Table DR26-2. In each case the maximum predicted nitrogen deposition was less than the critical load deposition. Therefore, it is concluded that even with the use of the conservative methodology for estimating nitrogen deposition noted previously, the cumulative impacts would not contribute to the significant degradation of sensitive species habitat located near the project site.

The dispersion modeling files, which include input and output files used in the analysis, have been submitted on CD. The predicted nitrogen deposition flux isopleths, which include the maximum predicted nitrogen deposition flux and the location within each of the sensitive areas, are included in Figures DR26-1 and DR26-2.

TABLE DR26-2
Comparison of the Predicted Cumulative Sources and HBEP N Deposition Flux to the Critical Loads of Nitrogen for the California Mediterranean Ecoregion and Wetlands

Habitat type	Maximum Predicted N Deposition Rate (kg N·ha^{-1} yr^{-1})	Background N Deposition Rate (kg N·ha^{-1} yr^{-1})	Total Predicted N Deposition Rate* (kg N·ha^{-1} yr^{-1})	CL for N Deposition (kg N·ha^{-1} yr^{-1})	Location of Maximum Predicted Deposition (i.e. Name of Wetland and/or Protected Area)
Chaparral	0.2	2	2.2	4–10	Laguna Coast Wilderness Park
Coastal sage scrub	1.5	2	3.5	7.8–10	Talbert Nature Preserve
Coastal dunes	3.1	2	5.1	10–20	Huntington Beach Wetlands Conservancy
Freshwater marsh/wetland	0.4	2	2.4	2.7–13	San Joaquin Freshwater Marsh Reserve
Intertidal salt marshes	0.2	2	2.2	63–400	Seal Beach National Wildlife Refuge
Intertidal wetlands	3.1	2	5.1	50–100	Huntington Beach Wetlands Conservancy
Oak woodlands	0.2	2	2.2	4–10	Bommer Canyon Open Space Preserve
Serpentine grassland	1.5	2	3.5	6	Talbert Nature Preserve
Riparian forest	0.2	2	2.2	20–155	Laguna Coast Wilderness Park

*The total predicted N deposition is the sum of the estimated background deposition rate of 2 kg N·ha^{-1} yr^{-1} plus the maximum predicted deposition rate.

Figure DR25-1: HBEP Total Nitrogen Deposition on Surrounding Habitats

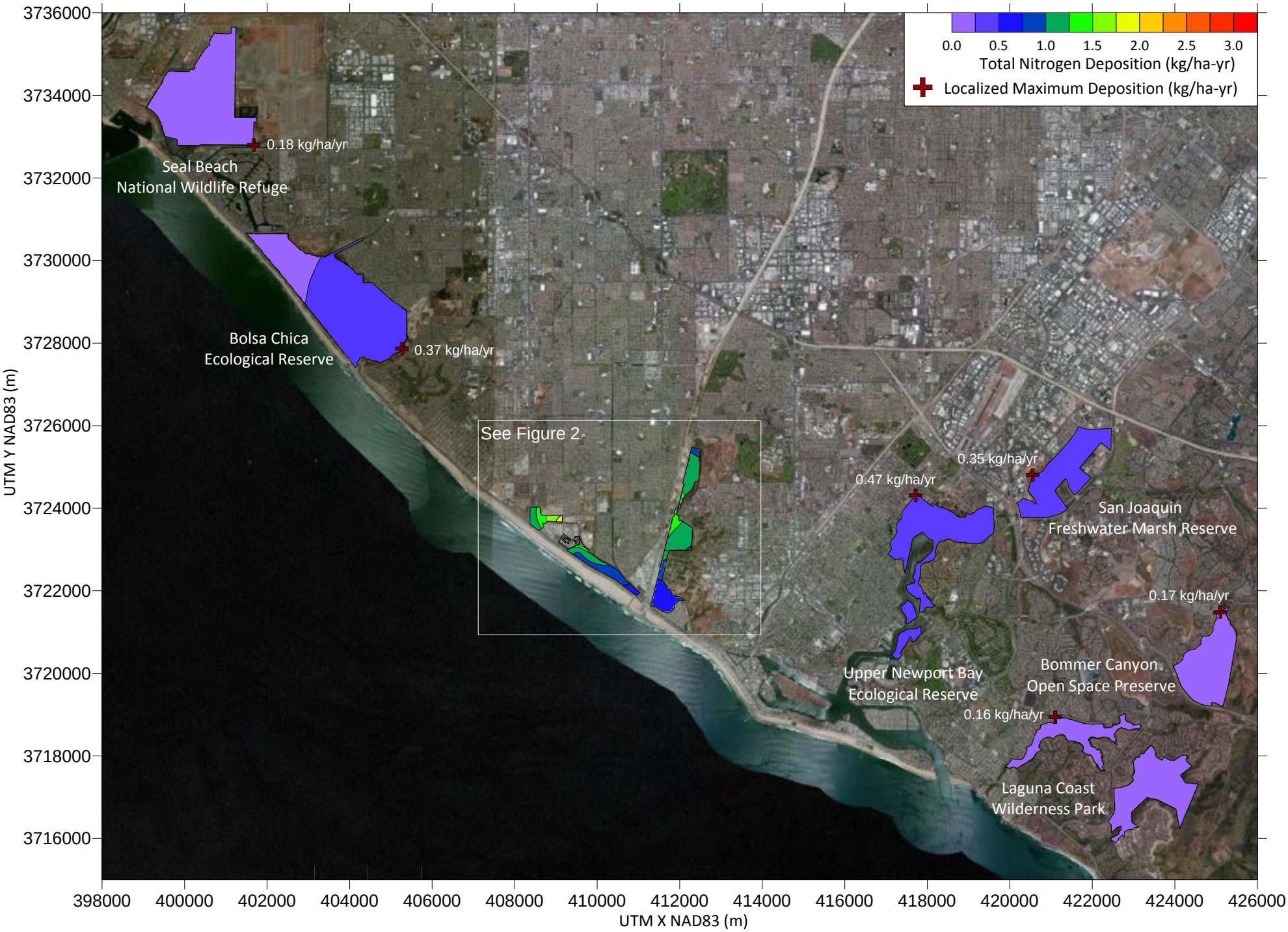

Figure DR25-2: HBEP Total Nitrogen Deposition on Surrounding Habitats

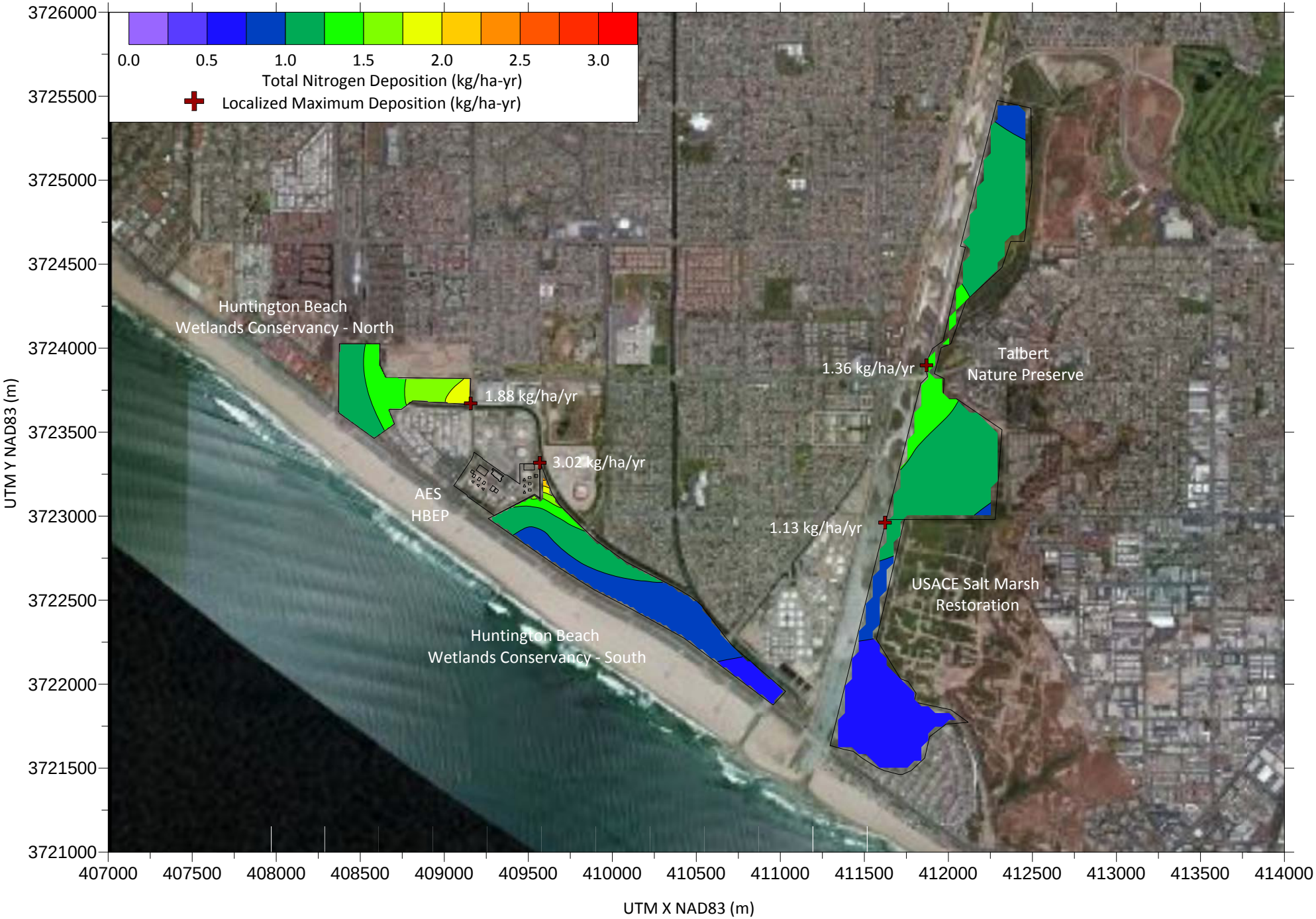

Figure DR26-1: HBEP Cumulative Nitrogen Deposition on Surrounding Habitats

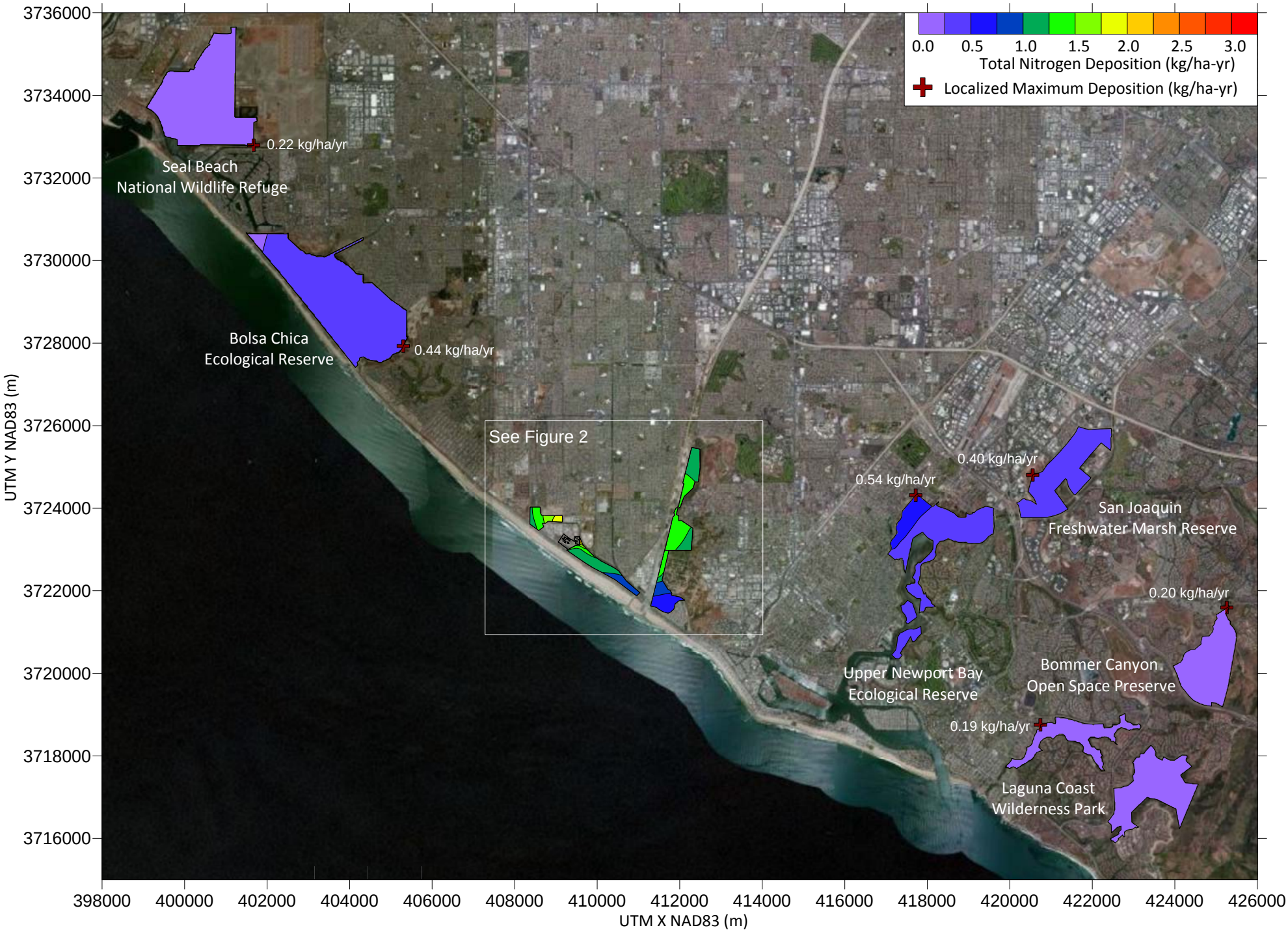

Figure DR26-2: HBEP Cumulative Nitrogen Deposition on Surrounding Habitats

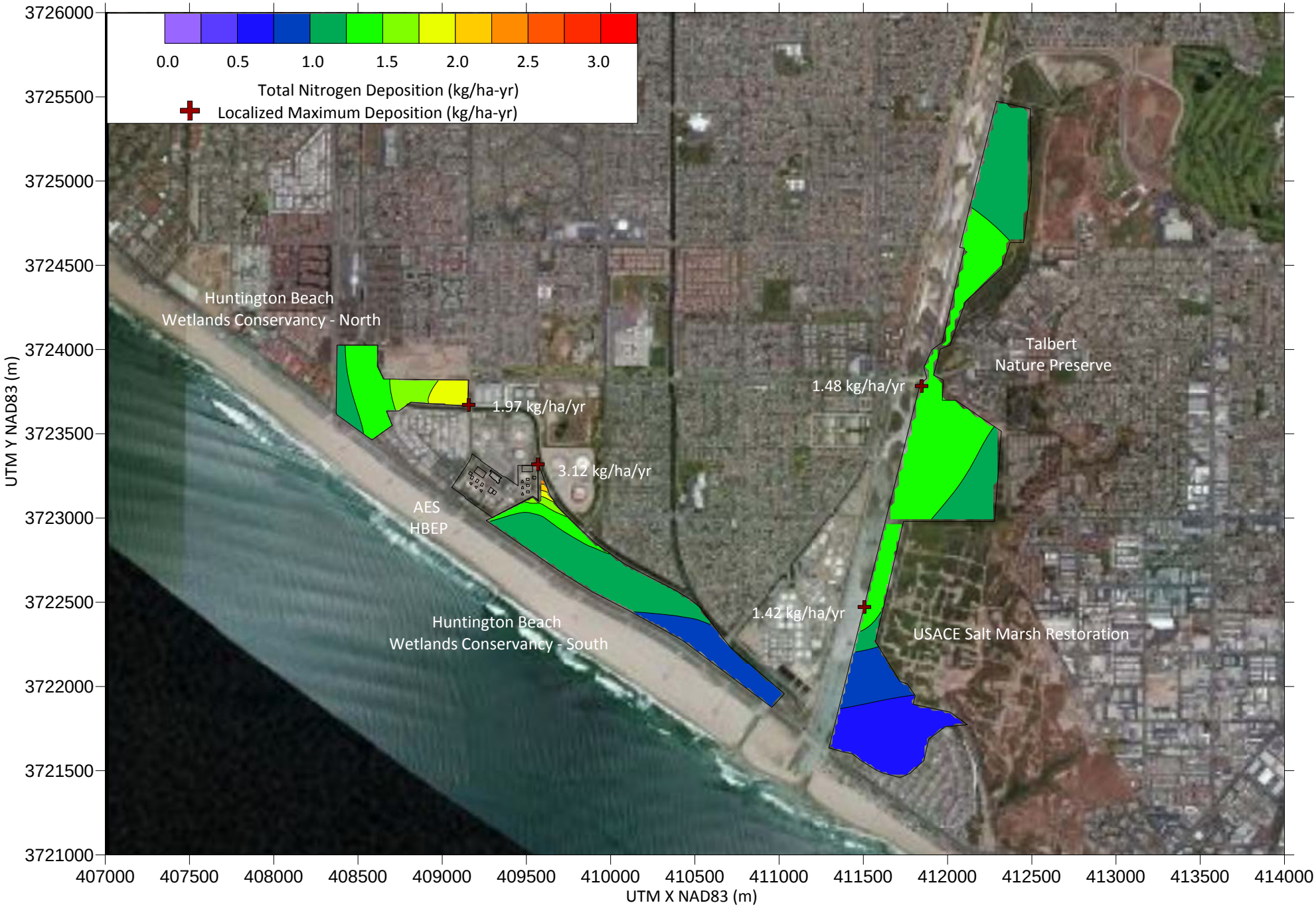

From: Jerry.Salamy@CH2M.com
Sent: Thursday, January 24, 2013 11:16 AM
To: CPerri@aqmd.gov
Subject: RE: HBEP commissioning emissions
Attachments: SCAQMD_Request_AES_HB_Fuel-Based_Emissions_1_24_2013.xlsx

Chris,

See attached for an excel format ready to print.

Did you receive the cumulative air quality impact assessment modeling report and CD and do I need to send the cumulative air quality impact assessment directly to Jillian Baker?

Thanks,

Jerry Salamy
Principal Project Manager
CH2M HILL/Sacramento
Phone 916-286-0207
Fax 916-614-3407
Cell Phone 916-769-8919

From: Chris Perri [mailto:CPerri@aqmd.gov]
Sent: Thursday, January 24, 2013 10:59 AM
To: Salamy, Jerry/SAC
Subject: RE: HBEP commissioning emissions

Thanks, Jerry.

Do you have the Unit 1 and 2 past actual emission data (Table 5.1B.8) in excel or word format?

Chris Perri
Air Quality Engineer
South Coast Air Quality Management District
(909) 396-2696

From: Jerry.Salamy@CH2M.com [mailto:Jerry.Salamy@CH2M.com]
Sent: Wednesday, January 23, 2013 12:40 PM
To: Chris Perri; stephen.okane@AES.com
Cc: Gerry.Bemis@energy.ca.gov; Felicia.Miller@energy.ca.gov; Tao.Jiang@energy.ca.gov; John Yee; Robert.Mason@CH2M.com
Subject: RE: HBEP commissioning emissions

Chris,

An assumed NOx concentration of 9 parts per million by volume dry and an exhaust gas flow rate is 651913.46 standard dry cubic feet per minute were used to estimate the 100% load uncontrolled NOx emission rate of 41.95 lb/hr.

Jerry Salamy
Principal Project Manager
CH2M HILL/Sacramento
Phone 916-286-0207
Fax 916-614-3407
Cell Phone 916-769-8919

From: Chris Perri [mailto:CPerri@aqmd.gov]
Sent: Wednesday, January 23, 2013 11:22 AM
To: stephen.okane@AES.com
Cc: Bemis, Gerry@Energy; Miller, Felicia@Energy; Jiang, Tao@Energy; Salamy, Jerry/SAC; John Yee
Subject: HBEP comissioning emissions

Hi Stephen,

I'm looking over the commissioning emissions estimates provided in Table 5.1B.1. It looks like the NOx emission rate for the 100% load activities, with the SCR efficiency at 75% is about 10.49 lbs/hr. Could you provide the data used to calculate that number (i.e., assumed NOx concentration and exhaust flow)?

Thanks

Chris Perri
Air Quality Engineer
South Coast Air Quality Management District
(909) 396-2696

From: Jerry.Salamy@CH2M.com
Sent: Thursday, January 24, 2013 11:16 AM
To: CPerri@aqmd.gov
Subject: RE: HBEP commissioning emissions
Attachments: SCAQMD_Request_AES_HB_Fuel-Based_Emissions_1_24_2013.xlsx

Chris,

See attached for an excel format ready to print.

Did you receive the cumulative air quality impact assessment modeling report and CD and do I need to send the cumulative air quality impact assessment directly to Jillian Baker?

Thanks,

Jerry Salamy
Principal Project Manager
CH2M HILL/Sacramento
Phone 916-286-0207
Fax 916-614-3407
Cell Phone 916-769-8919

From: Chris Perri [mailto:CPerri@aqmd.gov]
Sent: Thursday, January 24, 2013 10:59 AM
To: Salamy, Jerry/SAC
Subject: RE: HBEP commissioning emissions

Thanks, Jerry.

Do you have the Unit 1 and 2 past actual emission data (Table 5.1B.8) in excel or word format?

Chris Perri
Air Quality Engineer
South Coast Air Quality Management District
(909) 396-2696

From: Jerry.Salamy@CH2M.com [mailto:Jerry.Salamy@CH2M.com]
Sent: Wednesday, January 23, 2013 12:40 PM
To: Chris Perri; stephen.okane@AES.com
Cc: Gerry.Bemis@energy.ca.gov; Felicia.Miller@energy.ca.gov; Tao.Jiang@energy.ca.gov; John Yee; Robert.Mason@CH2M.com
Subject: RE: HBEP commissioning emissions

Chris,

An assumed NOx concentration of 9 parts per million by volume dry and an exhaust gas flow rate is 651913.46 standard dry cubic feet per minute were used to estimate the 100% load uncontrolled NOx emission rate of 41.95 lb/hr.

Jerry Salamy
Principal Project Manager
CH2M HILL/Sacramento
Phone 916-286-0207
Fax 916-614-3407
Cell Phone 916-769-8919

From: Chris Perri [mailto:CPerri@aqmd.gov]
Sent: Wednesday, January 23, 2013 11:22 AM
To: stephen.okane@AES.com
Cc: Bemis, Gerry@Energy; Miller, Felicia@Energy; Jiang, Tao@Energy; Salamy, Jerry/SAC; John Yee
Subject: HBEP comissioning emissions

Hi Stephen,

I'm looking over the commissioning emissions estimates provided in Table 5.1B.1. It looks like the NOx emission rate for the 100% load activities, with the SCR efficiency at 75% is about 10.49 lbs/hr. Could you provide the data used to calculate that number (i.e., assumed NOx concentration and exhaust flow)?

Thanks

Chris Perri
Air Quality Engineer
South Coast Air Quality Management District
(909) 396-2696

From: jbaker@aqmd.gov
Sent: Thursday, January 24, 2013 4:31 PM
To: Benjamin.Beattie@CH2M.com
Cc: Jerry.Salamy@CH2M.com; Elyse.Engel@ch2m.com; Keith.McGregor@CH2M.com; tchico@aqmd.gov; CPerri@aqmd.gov
Subject: RE: AERMET Meteorological Data Request

Hi Ben,

Attached is the csta5.pfl file for use in AERMOD. It has been updated with the latest version of AERSURFACE, AERMET, and is ready for use in AERMOD v12345. You should have already received the .sfc and ozone files for Costa Mesa and with this you have all the files you requested. While performing the revised analysis for this project, if you are going to do anything that deviates from the modeling protocol, we suggest that you submit an updated protocol with the changes.

Please let me know if you have any further questions.

Jillian Baker, Ph.D.
South Coast AQMD
21865 Copley Drive,
Diamond Bar, CA 91765
Direct: 909.396.3176

From: Benjamin.Beattie@CH2M.com [mailto:Benjamin.Beattie@CH2M.com]
Sent: Friday, January 18, 2013 3:21 PM
To: Jillian Baker
Cc: Jerry.Salamy@CH2M.com; Elyse.Engel@ch2m.com; Keith.McGregor@CH2M.com
Subject: RE: AERMET Meteorological Data Request

We will be using the latest released version of AERMOD (12345).

Benjamin Beattie
Engineer

CH2MHILL

2485 Natomas Park Drive, Suite 600
Sacramento, CA 95833
(916) 572-0679

From: Jillian Baker [mailto:jbaker@aqmd.gov]
Sent: Friday, January 18, 2013 3:17 PM
To: Beattie, Benjamin/SAC
Cc: Salamy, Jerry/SAC; Engel, Elyse/SJC; McGregor, Keith/SAC
Subject: RE: AERMET Meteorological Data Request

Hi Ben,

For the 5-year meteorological data, which version of AERMOD do you intend to use? This will determine which dataset I send you.

Jillian Baker, Ph.D.
South Coast AQMD
21865 Copley Drive,
Diamond Bar, CA 91765
Direct: 909.396.3176

From: Benjamin.Beattie@CH2M.com [mailto:Benjamin.Beattie@CH2M.com]
Sent: Friday, January 18, 2013 12:33 PM
To: Jillian Baker
Cc: Jerry.Salamy@CH2M.com; Elyse.Engel@ch2m.com; Keith.McGregor@CH2M.com
Subject: AERMET Meteorological Data Request

Hi Jillian,
Thank you for the advice and information you gave us regarding the federal 1-hr NO2 standard cumulative assessment. If you have it available, could you please send me the five-year AERMET dataset for the Costa Mesa station and the accompanying hourly background ozone files?
Thank you,

Benjamin Beattie
Engineer

CH2MHILL

2485 Natomas Park Drive, Suite 600
Sacramento, CA 95833
(916) 572-0679

From: jbaker@aqmd.gov
Sent: Thursday, January 24, 2013 4:31 PM
To: Benjamin.Beattie@CH2M.com
Cc: Jerry.Salamy@CH2M.com; Elyse.Engel@ch2m.com; Keith.McGregor@CH2M.com; tchico@aqmd.gov; CPerri@aqmd.gov
Subject: RE: AERMET Meteorological Data Request

Hi Ben,

Attached is the csta5.pfl file for use in AERMOD. It has been updated with the latest version of AERSURFACE, AERMET, and is ready for use in AERMOD v12345. You should have already received the .sfc and ozone files for Costa Mesa and with this you have all the files you requested. While performing the revised analysis for this project, if you are going to do anything that deviates from the modeling protocol, we suggest that you submit an updated protocol with the changes.

Please let me know if you have any further questions.

Jillian Baker, Ph.D.
South Coast AQMD
21865 Copley Drive,
Diamond Bar, CA 91765
Direct: 909.396.3176

From: Benjamin.Beattie@CH2M.com [mailto:Benjamin.Beattie@CH2M.com]
Sent: Friday, January 18, 2013 3:21 PM
To: Jillian Baker
Cc: Jerry.Salamy@CH2M.com; Elyse.Engel@ch2m.com; Keith.McGregor@CH2M.com
Subject: RE: AERMET Meteorological Data Request

We will be using the latest released version of AERMOD (12345).

Benjamin Beattie
Engineer

CH2MHILL

2485 Natomas Park Drive, Suite 600
Sacramento, CA 95833
(916) 572-0679

From: Jillian Baker [mailto:jbaker@aqmd.gov]
Sent: Friday, January 18, 2013 3:17 PM
To: Beattie, Benjamin/SAC
Cc: Salamy, Jerry/SAC; Engel, Elyse/SJC; McGregor, Keith/SAC
Subject: RE: AERMET Meteorological Data Request

Hi Ben,

For the 5-year meteorological data, which version of AERMOD do you intend to use? This will determine which dataset I send you.

Jillian Baker, Ph.D.
South Coast AQMD
21865 Copley Drive,
Diamond Bar, CA 91765
Direct: 909.396.3176

From: Benjamin.Beattie@CH2M.com [mailto:Benjamin.Beattie@CH2M.com]
Sent: Friday, January 18, 2013 12:33 PM
To: Jillian Baker
Cc: Jerry.Salamy@CH2M.com; Elyse.Engel@ch2m.com; Keith.McGregor@CH2M.com
Subject: AERMET Meteorological Data Request

Hi Jillian,
Thank you for the advice and information you gave us regarding the federal 1-hr NO2 standard cumulative assessment. If you have it available, could you please send me the five-year AERMET dataset for the Costa Mesa station and the accompanying hourly background ozone files?
Thank you,

Benjamin Beattie
Engineer

CH2MHILL

2485 Natomas Park Drive, Suite 600
Sacramento, CA 95833
(916) 572-0679

From: jbaker@aqmd.gov
Sent: Thursday, January 24, 2013 4:17 PM
To: Benjamin.Beattie@CH2M.com
Cc: Jerry.Salamy@CH2M.com; Elyse.Engel@ch2m.com; Keith.McGregor@CH2M.com
Subject: RE: AERMET Meteorological Data Request

Hi Ben,

Attached is the csta5.sfc file for use in AERMOD. It has been updated with the latest version of AERSURFACE, AERMET, and is ready for use in AERMOD v12345.

Jillian Baker, Ph.D.
South Coast AQMD
21865 Copley Drive,
Diamond Bar, CA 91765
Direct: 909.396.3176

From: Benjamin.Beattie@CH2M.com [mailto:Benjamin.Beattie@CH2M.com]
Sent: Friday, January 18, 2013 3:21 PM
To: Jillian Baker
Cc: Jerry.Salamy@CH2M.com; Elyse.Engel@ch2m.com; Keith.McGregor@CH2M.com
Subject: RE: AERMET Meteorological Data Request

We will be using the latest released version of AERMOD (12345).

Benjamin Beattie
Engineer

CH2MHILL

2485 Natomas Park Drive, Suite 600
Sacramento, CA 95833
(916) 572-0679

From: Jillian Baker [mailto:jbaker@aqmd.gov]
Sent: Friday, January 18, 2013 3:17 PM
To: Beattie, Benjamin/SAC
Cc: Salamy, Jerry/SAC; Engel, Elyse/SJC; McGregor, Keith/SAC
Subject: RE: AERMET Meteorological Data Request

Hi Ben,

For the 5-year meteorological data, which version of AERMOD do you intend to use? This will determine which dataset I send you.

Jillian Baker, Ph.D.
South Coast AQMD
21865 Copley Drive,
Diamond Bar, CA 91765

Direct: 909.396.3176

From: Benjamin.Beattie@CH2M.com [mailto:Benjamin.Beattie@CH2M.com]
Sent: Friday, January 18, 2013 12:33 PM
To: Jillian Baker
Cc: Jerry.Salamy@CH2M.com; Elyse.Engel@ch2m.com; Keith.McGregor@CH2M.com
Subject: AERMET Meteorological Data Request

Hi Jillian,
Thank you for the advice and information you gave us regarding the federal 1-hr NO2 standard cumulative assessment. If you have it available, could you please send me the five-year AERMET dataset for the Costa Mesa station and the accompanying hourly background ozone files?
Thank you,

Benjamin Beattie
Engineer

CH2MHILL

2485 Natomas Park Drive, Suite 600
Sacramento, CA 95833
(916) 572-0679

Case 1

Case 1 Heat Balance Number 1a Three Combustion Turbines Operating at Maximum Heat Input without Evaporative Cooling
Site Average Annual Temperature (SAAT), Dry Bulb 65.8 F, Wet Bulb 56.8 F, Relative Humidity 57%

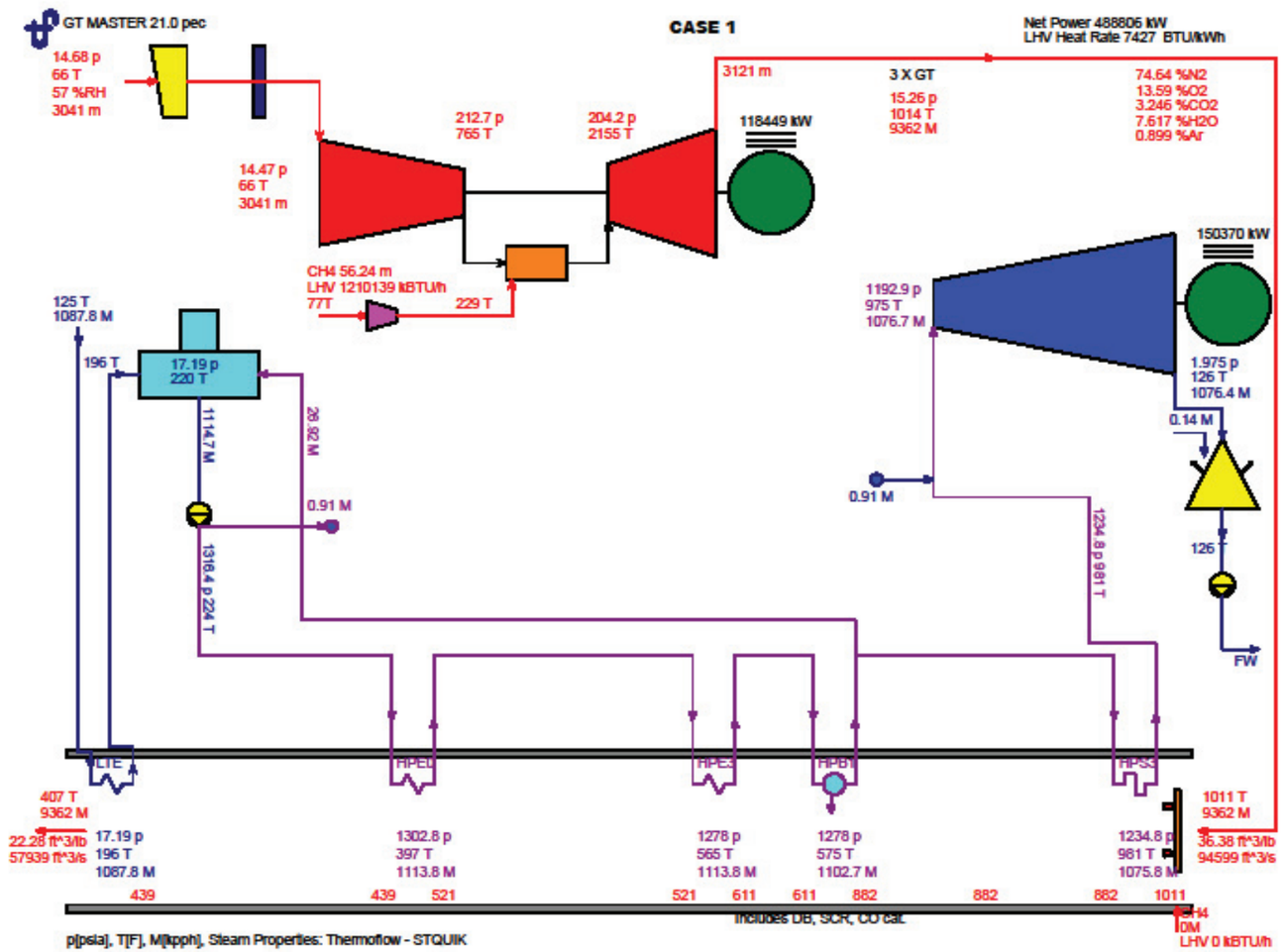

Case 1 Heat Balance Number 1a Three Combustion Turbines Operating at Maximum Heat Input without Evaporative Cooling
Site Average Annual Temperature (SAAT), Dry Bulb 65.8 F, Wet Bulb 56.8 F, Relative Humidity 57%

FIGURE 2.1-3a
Heat Balance
AES Huntington Beach Energy Project
Huntington Beach, California

Case 9

Case 9 Heat Balance Number 3b(1) Two Combustion Turbines Operating at Maximum Heat Input with Evaporative Cooling and Duct Burner

Site Monthly Maximum Average Ambient Temperature (SMMAAT) is 85 °F (Dry Bulb) and 69.7 °F (Wet Bulb) and relative humidity (RH) of 45.75%)

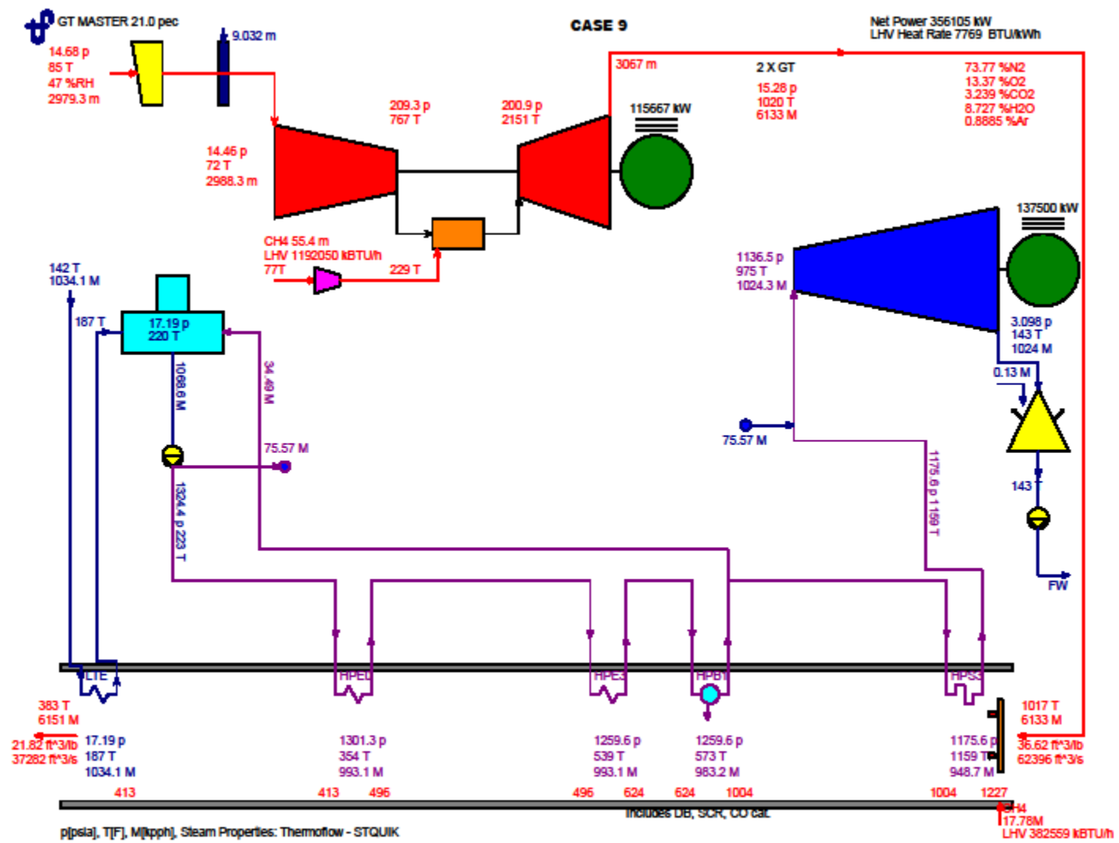

Case 9 Heat Balance Number 3b(1) Two Combustion Turbines Operating at Maximum Heat Input with Evaporative Cooling and Duct Burner
Site Monthly Maximum Average Ambient Temperature (SMMAAT) is 85 °F (Dry Bulb) and 69.7 °F (Wet Bulb) and relative humidity (RH) of 45.75%)

[redacted]

F[redacted]

[redacted]

[redacted]

[redacted]

From: Jerry.Salamy@CH2M.com [mailto:Jerry.Salamy@CH2M.com]
Sent: Tuesday, January 29, 2013 3:53 PM
To: Tao.Jiang@energy.ca.gov; CPerri@aqmd.gov; stephen.okane@AES.com
Cc: Robert.Mason@CH2M.com; Foster, Melissa A.; Felicia.Miller@energy.ca.gov; Gerry.Bemis@energy.ca.gov; Keith.McGregor@CH2M.com; Elyse.Engel@ch2m.com
Subject: RE: HBEP start/stop emissions and GHG performance

Tao,

Below is our response to your GHG performance data request. Please let me know if you have any additional questions.

Can you fill in the following table and provide the detailed calculations? I assume the GHG emission of 3,141,167 tons/year reported in CEC data response DR-12 represents the total CO2E, not just CO2. I still need the data for each GHG, which included in original AFC. Please also indicate the operation scenarios (heat rates, power outputs, etc) to derive the GHG emissions.

Response: Our response to CEC Data Request 12 represented a maximum GHG emission case and assumed that the turbines and duct burner are fired at their maximum rate at an ambient temperature of 32 F, which is not feasible for 5900 hours. Below is a more realistic estimate of the GHG and electrical production based on one of the two power blocks consisting of 3 combustion turbines and 1 steam turbine.

Heat Input Estimate
Unfired Operation: 3 on 1 operation at maximum heat input for an ambient condition of 65.8 F.

- Turbine hourly heat input (per turbine) = 1210.139 MMBtu/hr LHV or 1331.153 MMBtu/hr HHV (refer to AFC Figure 2.1-3a [included as the attached heat and mass balance Case 1]. HHV to LHV ratio is 1.1)
- Turbine annual heat input (3 turbines) = 1331.153 MMBtu/hr HHV * 5900 hours/year * 3 turbines = 23,561,406 MMBtu/year HHV

Fired Operation: The HBEP steam cycle is not sized to accept steam production from more than two HRSGs at the maximum duct burner firing rate, so the duct fired heat inputs are based on a 2 on 1 configuration at an ambient air temperature of 85 F.

- Turbine hourly heat input for duct fired case (per turbine) = 1192.05 MMBtu/hr LHV or 1311.255 MMBtu/hr HHV (refer to the attached heat and mass balance Case 9)
- Turbine annual heat input for duct fired case (2 turbines) = 1311.255 MMBtu/hr HHV * 470 hours/year * 2 turbines = 1,232,580 MMBtu/year HHV
- Duct burner hourly heat input (per turbine) = 382.559 MMBtu/hr LHV or 420.815 MMBtu/hr HHV (refer to the attached heat and mass balance Case 9)
- Duct burner annual heat input (2 turbines) = 420.815 MMBtu/hr HHV * 470 hours/year * 2 turbines = 395,566 MMBtu/year HHV

Start/Stop: Fuel used during start up and shutdowns is estimated from turbine vendor data (refer to the attached MSPA start up and shutdown emissions).

- Start up fuel use = (2.3 klb/start * 1000 lb/1 klb * 23263 Btu-HHV/lb) * 1 MMBtu/1000000 Btu = 53.505 MMBtu/start * 624 starts/year = 33,387 MMBtu/year
- Shutdown fuel use = (0.4 klb/stop * 1000 lb/1 klb * 23263 Btu-HHV/lb) * 1 MMBtu/1000000 Btu = 9.305 MMBtu/stop * 624 stops/year = 5,806 MMBtu/year

Total Heat Input:

- Total expected annual heat input (sum of unfired, fired, and start/stop operations) = 25,228,745 MMBtu/year HHV

GHG Estimate

Using the annual heat rate calculated above, we estimate the expected GHG emissions to be 1,343,905 MT CO2E/year. The following table presents the supporting calculation based on an annual heat input of 25,228,745 MMBtu/year HHV.

GHG	Emission Factor (kg/MMBtu)	Emission Factor (MT/MMBtu)	GWP	MT/Year	MT CO2E/Year
CO2	52.91	0.05291	1	1,334,853	1,334,853
CH4	0.0038	0.0000038	21	95.87	2,013
N2O	0.0009	0.0000009	310	22.71	7,039
CO2 Equivalent (Total)	NA	NA	NA	NA	1,343,905

Estimate of Annual Megawatt-Hours

The estimated annual megawatt-hours (MWH) are based on the same conditions used to estimate the heat inputs above.

- Unfired annual MWH = ((118.449 MWs * 3 turbines) + 150.37 MWs for the steam turbine) * 5900 hours/year = 2,983,730 MWH/year
- Fired annual MWH = ((115.667 MWs * 2 turbines) + 137.5 MWs for the steam turbine) * 470 hours/year = 173,352 MWH/year
- Start up annual MWH = 2.3 MWH * 624 starts/year = 1,435 MWH/year
- Stop annual MWH = 0.5 MWH * 624 starts/year = 312 MWH/year
- Total annual HBEP MWH = 2,983,730 MWH/year + 173,352 MWH/year + 1,435 MWH/year + 312 MWH/year = 3,158,829 MWH/year

With the above GHG emissions and megawatt-hours per year, the annualized GHG performance is 0.425 MT CO2E/MWH.

Emissions Source	**Operational GHG Emissions (MTCO2E/yr)** [a]
CTGs CO_2	1,334,853
CTGs CH_4	96
CTGs N_2O	23
Total Project GHG Emissions (MTCO2E/yr)	1,343,905
Estimated Annual Energy Output (MWh/yr)	3,158,829
Estimated Annualized GHG Performance (MTCO2E/MWh)	0.425

In this case, the total operation hours are 4910 hrs + 93.6 hrs + 98.8 hrs =5102.4, not 5900 hours shown in CEC data response DR-12. Can you explain the difference?

Response: The GHG data presented to the SCAQMD represents AES's prediction of how HBEP may operate in the future and not what is being requested as a permit limitation.

Jerry Salamy
Principal Project Manager
CH2M HILL/Sacramento
Phone 916-286-0207
Fax 916-614-3407
Cell Phone 916-769-8919

From: Jiang, Tao@Energy [mailto:Tao.Jiang@energy.ca.gov]
Sent: Monday, January 14, 2013 12:38 PM
To: Salamy, Jerry/SAC; CPerri@aqmd.gov; stephen.okane@AES.com
Cc: Mason, Robert/SCO; JAMCKINSEY@stoel.com; mafoster@stoel.com; Miller, Felicia@Energy; Bemis, Gerry@Energy;

McGregor, Keith/SAC; Engel, Elyse/SJC
Subject: RE: HBEP start/stop emissions and GHG performance

Jerry,
I checked your response regarding to GHG performance submitted in last month but cannot find the data I need. Can you fill in the following table and provide the detailed calculations (you can just revise AFC appendix table 5.1B7)? I assume the GHG emission of 3,141,167 tons/year reported in CEC data response DR-12 represents the total CO2E, not just CO2. I still need the data for each GHG, which included in original AFC. Please also indicate the operation scenarios (heat rates, power outputs, etc) to derive the GHG emissions.

Emissions Source	**Operational GHG Emissions (MTCO2E/yr)** [a]
CTGs CO_2	
CTGs CH_4	
CTGs N_2O	
Total Project GHG Emissions (MTCO2E/yr)	3,141,167
Estimated Annual Energy Output (MWh/yr)	
Estimated Annualized GHG Performance ($MTCO_2$/MWh)	

In addition, in your GHG response to the district, the annual average heat rate is calculated as: *State 1 - 250 hrs * 7564 btu/kWh + State 2 - 3200 hrs * 7353 btu/kWh + State 3 - 1460 hrs * 7350 btu/kWh + Start Up93.6 hrs *18267 btu/kWh + Stop - 98.8 hrs * 16520 btu/kWh)/(4910 hrs + 93.6 hrs + 98.8 hrs) ＝7740 btu/kWh Gross*:. I this case, the total operation hours are 4910 hrs + 93.6 hrs + 98.8 hrs=5102.4, not 5900 hours shown in CEC data response DR-12. Can you explain the difference? Thanks.

Tao Jiang, Ph.D., P.E.
Air Resources Engineer
Siting, Transmission and Environmental Protection Division California Energy Commission
1516 Ninth Street, MS 46
Sacramento, CA 95814-5504
Phone: (916) 654-3852

From: Jerry.Salamy@CH2M.com [mailto:Jerry.Salamy@CH2M.com]
Sent: Wednesday, December 12, 2012 12:39 PM
To: CPerri@aqmd.gov; stephen.okane@AES.com
Cc: Robert.Mason@CH2M.com; JAMCKINSEY@stoel.com; mafoster@stoel.com; Miller, Felicia@Energy; Jiang, Tao@Energy; Bemis, Gerry@Energy; Keith.McGregor@CH2M.com; Elyse.Engel@ch2m.com
Subject: RE: HBEP start/stop emissions and GHG performance

Chris,

The design engineers estimated that within 12.5 minutes of fuel initiation, the SCR would be reach the minimum operating temperature for ammonia injection to commence for either a hot, warm, or cold start. Therefore, the NOx removal efficiency is 0 percent for the first 12.5 minutes after fuel combustion is initiated and 70 percent thereafter.

For a hot or warm start, the oxidation catalyst system is functional at the initiation of combustion with an average CO and VOC removal efficiencies of 72 percent and 28 percent, respectively. For a cold start, the oxidation catalyst system reaches the minimum operating temperature at 4 minutes of initiating combustion and is fully functional by minute 9. The an average CO and VOC removal efficiencies during the 9 minute period are 31 percent and 9 percent, respectively.

For shutdowns, the SCR and oxidation catalyst systems are functional over the entire shutdown period with an average NOx, CO, and VOC removal efficiencies of 30 percent, 80 percent, and 30 percent, respectively.

Thanks,

Jerry Salamy
Principal Project Manager
CH2M HILL/Sacramento
Phone 916-286-0207
Fax 916-614-3407
Cell Phone 916-769-8919

From: Chris Perri [mailto:CPerri@aqmd.gov]
Sent: Wednesday, December 12, 2012 9:58 AM
To: Stephen O'Kane
Cc: Mason, Robert/SCO; McKinsey, John A.; Foster, Melissa A.; Salamy, Jerry/SAC; Miller, Felicia@Energy; 'Tao.Jiang@energy.ca.gov'; 'Gerry.Bemis@energy.ca.gov'
Subject: RE: HBEP start/stop emissions and GHG performance

Stephen,

Thanks. A follow up question on the start ups – at what point after start up would the SCR become functional?

Chris Perri
Air Quality Engineer
South Coast Air Quality Management District
(909) 396-2696

From: Stephen O'Kane [mailto:stephen.okane@AES.com]
Sent: Friday, December 07, 2012 4:34 PM
To: Chris Perri
Cc: Robert.Mason@CH2M.com; McKinsey, John A.; Foster, Melissa A.; Jerry.Salamy@CH2M.com; Miller, Felicia@Energy; 'Tao.Jiang@energy.ca.gov'; 'Gerry.Bemis@energy.ca.gov'
Subject: HBEP start/stop emissions and GHG performance

Chris,

In response to your questions regarding detail on the estimated start/stop emissions for the Huntington Beach Energy Project turbines and the assumptions that went in to our calculation of GHG emissions per MW-hr, please see the attached letter and accompanying data. If you require further information or explanation for any of our assertions please don't hesitate to ask.

Thanks

Per: Stephen O'Kane
Permitting and Regulatory Approvals, Southland Repower Team

AES Southland
690 N. Studebaker Rd. | Long Beach, CA | 90803
Direct: 562-493-7840 | Cell: 562-508-0962 | Fax: 562-493-7737
stephen.okane@aes.com | www.aes.com

This communication is for use by the intended recipient and contains information that may be privileged, confidential or copyrighted under law. If you are not the intended recipient, you are hereby formally notified that any use, copying or distribution of this e-Mail, in whole or in part, is strictly prohibited. Please notify the sender by return e-Mail and delete this e-Mail from your system. Unless explicitly and conspicuously stated in the subject matter of the above e-Mail, this e-Mail does not constitute a contract offer, a contract amendment, or an acceptance of a contract offer. This e-Mail does not constitute consent to the use of sender's contact information for direct marketing purposes or for transfers of data to third parties.

Customer AES
Project: M501D5

Combined Cycle Startup Emissions

Notes
Using : MPS preliminary M501DA Fast Start curve

Total Emissions Per Event (Combined Cycle) at site conditions

CTG/Stack 1

	Duration(1)	NOx	CO	VOC	PM10	GT Net MW	Fuel Gas
	minutes	lb	lb	lb	lb	MWh	klb
Hot Start	9	8.5	142.0	25.6	0.8	2.6	2.3
Shutdown	9.5	11.7	206.0	40.2	1.1	0.5	0.4

Notes
(1) Duration is the total time for the gas turbine between GT ignition and 70% load during Start-Up and Shut-Down.
(2) Calculations are performed for a New and Clean Gas turbine.
(3) Calculations were performed at 71°F dry bulb and 60% RH.
(4) Values are given at the GT Exhaust flange, without duct firing and without Catalyst effects.
(5) Since calculations may be based on some assumed values, Purchaser shall confirm with MPSA prior to using these values for permitting purposes.
(6) Shut down FSNL hold time based on 5 minutes.

198-AESinCA-DA-Gas-71F_STARTUP-20120320(Reduction)DMr1.xls, Customer

ATTACHMENT 2
HBEP Start Up Emissions
AES Huntington Beach Energy Project
Huntington Beach, California

From: Elyse.Engel@ch2m.com
Sent: Wednesday, February 06, 2013 7:49 AM
To: jbaker@aqmd.gov
Cc: John.Frohning@CH2M.com; Benjamin.Beattie@CH2M.com; Jerry.Salamy@CH2M.com; Keith.McGregor@CH2M.com
Subject: Costa Mesa Meteorological Data Questions

Hi Jillian,

Thank you for your time yesterday to discuss the revised 5-year Costa Mesa meteorological dataset processed with the updated version of AERMET (version 12345). We just wanted to follow-up on our observations from comparing the revised dataset to the original 3-year dataset. As discussed, we also reviewed the revised Ozone data and had a question about the inconsistencies between the previous 3-year dataset and the new 5-year dataset. We understand that many of the questions about the differences could be accounted for by using the new version of AERSURFACE; however, they are repeated below for verification.

Please review the following questions / comments and let us know if you would like to discuss in more detail:

1. SFC Files: The revised 5-year dataset processed with version 12345 has a coordinate inconsistent with the Costa Mesa station location. The coordinate included appears to be for the Crestline station. Please verify that Stages 1 and 3 of AERMET were preprocessed with the correct station location for Costa Mesa.
2. SFC Files: The surface roughness length is not consistent between the old and new datasets. We understand this may be an artifact of using the updated version of AERSURFACE, but please confirm. Please also confirm that the correct coordinate for the Costa Mesa station was used in AERSURFACE.
3. SFC Files, Albedo: The albedo between the old and new datasets do not match for many hours. Again, this may be an artifact of using the updated version of AERSURFACE, but please confirm.
4. SFC/PFL Files, Wind Direction: It appears that the updated dataset rounded wind direction to the nearest degree. Why was AERMET version 12345 run with different raw surface data? Please note, however, that not all wind directions appear to be rounded to the nearest degree as there are some cases when there is a value after the decimal point (example: January 5, 2005, hour 4).
5. SFC/PFL Files, Wind Speed: Again, it appears that there has been some rounding to the nearest tenth of a m/sec; however, there are some cases where the wind speed differences between the old and new datasets differ by more than a tenth of a m/sec. Why was the valid raw data input into AERMET different for the new dataset?
6. Wind Speed/Wind Direction: What are the starting thresholds for both the wind speed and wind direction sensor? Based on our conversation, many of the previously identified 'calms' were now modified to a wind speed of 0.28 m/sec. Please confirm this value is the greater of the wind direction or wind speed sensor starting thresholds.
7. SFC File, Missing Data Inconsistencies: In contrast to comment 6, there are now some instances when data previously identified as valid are now considered missing/invalid (example: January 11, 2005, hours 12, 13, 14, and 15). Please confirm.
8. SFC File, Pressure: The pressure values between the old and new datasets vary greatly. Please verify the difference.
9. SFC File, Cloud Cover: The cloud cover varies greatly between the old and new datasets. Please verify the difference.
10. Ozone Data: It appears that missing data in the new dataset was filled in differently compared to the old dataset. Please provide the guidance followed to fill in the missing data and the justification to change methodologies compared to data previously obtained through the SCAQMD website.

We look forward to hearing from you.

Thanks,
Elyse and John

Elyse Engel
Staff Engineer
Environmental Services Business Group

CH2M HILL
1737 North First Street, Suite 300
San Jose, California 95112
Direct 408.436.4936 x37432
Fax 408.436.4829
elyse.engel@ch2m.com

From: jbaker@aqmd.gov
Sent: Tuesday, February 12, 2013 3:15 PM
To: Elyse.Engel@ch2m.com
Cc: John.Frohning@CH2M.com; Benjamin.Beattie@CH2M.com; Jerry.Salamy@CH2M.com; Keith.McGregor@CH2M.com; tchico@aqmd.gov; CPerri@aqmd.gov
Subject: RE: Costa Mesa Meteorological Data Questions
Attachments: csta5.sfc

Hi Elyse,

I believe that I have answered all your questions on the phone last week. The only outstanding response is how the missing data in the ozone file was calculated, which is described below. I am also attaching the csta5.sfc file for your use. This file is the same file as the one which was previously provided to you, with a change in the station location, which does not affect the modeled results. You should already have the csta5.pfl file to use.

Response to #10.
As you are aware, the 3 years of met data and ozone data posted on our website was sufficient for use in non-PSD permitting projects. As indicated on our website, we request that applicants contact us for the most recent and updated met data plus ozone or NO2 data for all PSD projects. The method used for filling-in missing ozone data for purposes of Tier 3 NO2 modeling was updated in response to the new federal 1-hour NO2 standard and has been used on previous PSD projects within the District. The procedure is as follows:

1 to 3 Consecutive Hours of Missing Data

1, 2, or 3 consecutive hours of missing ozone data was filled in by linear interpolation between non-missing ozone data on either side of the missing period.

More than 3 consecutive Hours of Missing Data

Ambient ozone in southern California exhibits a strong and distinct diurnal and seasonal pattern. That is, ambient ozone concentrations are highest in the spring and summer months and during the mid-day hours. Filling-in missing ozone data with the highest hourly concentration is overly and unreasonably conservative. For instance, it is unreasonable to use the peak hourly ozone concentration for the modeling period to fill-in missing hours at nighttime when ozone concentrations approach zero.

Instead, we extracted the maximum value for each hour of the day and month of the year. Thus, there were 12 sets (representing each month of the year) of 24 hourly (representing the 24 hours in the day) ozone values. In this manner, the diurnal and seasonal ambient ozone patterns are preserved. So missing ozone at 1 a.m. in December would be filled in with the maximum 1 a.m. ozone concentration for all the Decembers in the modeling period. Similarly missing ozone at 2 p.m. in July would be filled in with the maximum 2 p.m. ozone concentration for all the Julys in the modeling period.

Please let me know if you have further questions.

Jillian Baker, Ph.D.
South Coast AQMD
21865 Copley Drive,
Diamond Bar, CA 91765
Direct: 909.396.3176

From: Elyse.Engel@ch2m.com [mailto:Elyse.Engel@ch2m.com]
Sent: Wednesday, February 06, 2013 7:49 AM

To: Jillian Baker
Cc: John.Frohning@CH2M.com; Benjamin.Beattie@CH2M.com; Jerry.Salamy@CH2M.com; Keith.McGregor@CH2M.com
Subject: Costa Mesa Meteorological Data Questions

Hi Jillian,

Thank you for your time yesterday to discuss the revised 5-year Costa Mesa meteorological dataset processed with the updated version of AERMET (version 12345). We just wanted to follow-up on our observations from comparing the revised dataset to the original 3-year dataset. As discussed, we also reviewed the revised Ozone data and had a question about the inconsistencies between the previous 3-year dataset and the new 5-year dataset. We understand that many of the questions about the differences could be accounted for by using the new version of AERSURFACE; however, they are repeated below for verification.

Please review the following questions / comments and let us know if you would like to discuss in more detail:

1. SFC Files: The revised 5-year dataset processed with version 12345 has a coordinate inconsistent with the Costa Mesa station location. The coordinate included appears to be for the Crestline station. Please verify that Stages 1 and 3 of AERMET were preprocessed with the correct station location for Costa Mesa.
2. SFC Files: The surface roughness length is not consistent between the old and new datasets. We understand this may be an artifact of using the updated version of AERSURFACE, but please confirm. Please also confirm that the correct coordinate for the Costa Mesa station was used in AERSURFACE.
3. SFC Files, Albedo: The albedo between the old and new datasets do not match for many hours. Again, this may be an artifact of using the updated version of AERSURFACE, but please confirm.
4. SFC/PFL Files, Wind Direction: It appears that the updated dataset rounded wind direction to the nearest degree. Why was AERMET version 12345 run with different raw surface data? Please note, however, that not all wind directions appear to be rounded to the nearest degree as there are some cases when there is a value after the decimal point (example: January 5, 2005, hour 4).
5. SFC/PFL Files, Wind Speed: Again, it appears that there has been some rounding to the nearest tenth of a m/sec; however, there are some cases where the wind speed differences between the old and new datasets differ by more than a tenth of a m/sec. Why was the valid raw data input into AERMET different for the new dataset?
6. Wind Speed/Wind Direction: What are the starting thresholds for both the wind speed and wind direction sensor? Based on our conversation, many of the previously identified 'calms' were now modified to a wind speed of 0.28 m/sec. Please confirm this value is the greater of the wind direction or wind speed sensor starting thresholds.
7. SFC File, Missing Data Inconsistencies: In contrast to comment 6, there are now some instances when data previously identified as valid are now considered missing/invalid (example: January 11, 2005, hours 12, 13, 14, and 15). Please confirm.
8. SFC File, Pressure: The pressure values between the old and new datasets vary greatly. Please verify the difference.
9. SFC File, Cloud Cover: The cloud cover varies greatly between the old and new datasets. Please verify the difference.
10. Ozone Data: It appears that missing data in the new dataset was filled in differently compared to the old dataset. Please provide the guidance followed to fill in the missing data and the justification to change methodologies compared to data previously obtained through the SCAQMD website.

We look forward to hearing from you.

Thanks,
Elyse and John

Elyse Engel
Staff Engineer
Environmental Services Business Group

CH2M HILL
1737 North First Street, Suite 300
San Jose, California 95112
Direct 408.436.4936 x37432
Fax 408.436.4829
elyse.engel@ch2m.com

From: jbaker@aqmd.gov
Sent: Tuesday, February 19, 2013 8:57 AM
To: Elyse.Engel@ch2m.com
Cc: John.Frohning@CH2M.com; Benjamin.Beattie@CH2M.com; Jerry.Salamy@CH2M.com; Keith.McGregor@CH2M.com; tchico@aqmd.gov; CPerri@aqmd.gov; slee@aqmd.gov
Subject: RE: Costa Mesa Meteorological Data Questions
Attachments: CostaMesa_for_Consultant.zip

** WARNING ** This email contains a compressed file (e.g., ZIP), which is a file type often used to package & deliver viruses. Be VERY suspicious of ALL file attachments--ESPECIALLY if you do not know the sender. If you're in doubt about the legitimacy of this email, then DO NOT open the file attachment(s) before verifying with the sender.

Report suspicious emails to TAC, or your Regional IT Helpdesk if not supported by TAC.

File Name(s): CostaMesa_for_Consultant.zip
File Type(s): compressed/zip

The original message text is below.
++

Hi Elyse,

Attached are the files you requested.

Jillian Baker, Ph.D.
South Coast AQMD
21865 Copley Drive,
Diamond Bar, CA 91765
Direct: 909.396.3176

From: Elyse.Engel@ch2m.com [mailto:Elyse.Engel@ch2m.com]
Sent: Wednesday, February 13, 2013 9:22 PM
To: Jillian Baker
Cc: John.Frohning@CH2M.com; Benjamin.Beattie@CH2M.com; Jerry.Salamy@CH2M.com; Keith.McGregor@CH2M.com; Tom Chico; Chris Perri
Subject: RE: Costa Mesa Meteorological Data Questions

Hi Jillian,

Thank you for providing the revised 5-year dataset and clarification on the ozone data. To verify the responses to comments 2 through 9 below, based on our phone call last week, could you please provide the following additional data:

- Input and output files for AERMET Stage 1 through Stage 3
- Raw data used for AERMET Stage 1 processing

Please let me know if you have any questions about this additional request.

Thanks,
Elyse

From: Jillian Baker [mailto:jbaker@aqmd.gov]
Sent: Tuesday, February 12, 2013 3:15 PM
To: Engel, Elyse/SJC
Cc: Frohning, John/SEA; Beattie, Benjamin/SAC; Salamy, Jerry/SAC; McGregor, Keith/SAC; Tom Chico; Chris Perri
Subject: RE: Costa Mesa Meteorological Data Questions

Hi Elyse,

I believe that I have answered all your questions on the phone last week. The only outstanding response is how the missing data in the ozone file was calculated, which is described below. I am also attaching the csta5.sfc file for your use. This file is the same file as the one which was previously provided to you, with a change in the station location, which does not affect the modeled results. You should already have the csta5.pfl file to use.

Response to #10.
As you are aware, the 3 years of met data and ozone data posted on our website was sufficient for use in non-PSD permitting projects. As indicated on our website, we request that applicants contact us for the most recent and updated met data plus ozone or NO2 data for all PSD projects. The method used for filling-in missing ozone data for purposes of Tier 3 NO2 modeling was updated in response to the new federal 1-hour NO2 standard and has been used on previous PSD projects within the District. The procedure is as follows:

1 to 3 Consecutive Hours of Missing Data

1, 2, or 3 consecutive hours of missing ozone data was filled in by linear interpolation between non-missing ozone data on either side of the missing period.

More than 3 consecutive Hours of Missing Data

Ambient ozone in southern California exhibits a strong and distinct diurnal and seasonal pattern. That is, ambient ozone concentrations are highest in the spring and summer months and during the mid-day hours. Filling-in missing ozone data with the highest hourly concentration is overly and unreasonably conservative. For instance, it is unreasonable to use the peak hourly ozone concentration for the modeling period to fill-in missing hours at nighttime when ozone concentrations approach zero.

Instead, we extracted the maximum value for each hour of the day and month of the year. Thus, there were 12 sets (representing each month of the year) of 24 hourly (representing the 24 hours in the day) ozone values. In this manner, the diurnal and seasonal ambient ozone patterns are preserved. So missing ozone at 1 a.m. in December would be filled in with the maximum 1 a.m. ozone concentration for all the Decembers in the modeling period. Similarly missing ozone at 2 p.m. in July would be filled in with the maximum 2 p.m. ozone concentration for all the Julys in the modeling period.

Please let me know if you have further questions.

Jillian Baker, Ph.D.
South Coast AQMD
21865 Copley Drive,
Diamond Bar, CA 91765
Direct: 909.396.3176

From: Elyse.Engel@ch2m.com [mailto:Elyse.Engel@ch2m.com]
Sent: Wednesday, February 06, 2013 7:49 AM
To: Jillian Baker
Cc: John.Frohning@CH2M.com; Benjamin.Beattie@CH2M.com; Jerry.Salamy@CH2M.com; Keith.McGregor@CH2M.com
Subject: Costa Mesa Meteorological Data Questions

Hi Jillian,

Thank you for your time yesterday to discuss the revised 5-year Costa Mesa meteorological dataset processed with the updated version of AERMET (version 12345). We just wanted to follow-up on our observations from comparing the revised dataset to the original 3-year dataset. As discussed, we also reviewed the revised Ozone data and had a question about the inconsistencies between the previous 3-year dataset and the new 5-year dataset. We understand that many of the questions about the differences could be accounted for by using the new version of AERSURFACE; however, they are repeated below for verification.

Please review the following questions / comments and let us know if you would like to discuss in more detail:

1. SFC Files: The revised 5-year dataset processed with version 12345 has a coordinate inconsistent with the Costa Mesa station location. The coordinate included appears to be for the Crestline station. Please verify that Stages 1 and 3 of AERMET were preprocessed with the correct station location for Costa Mesa.
2. SFC Files: The surface roughness length is not consistent between the old and new datasets. We understand this may be an artifact of using the updated version of AERSURFACE, but please confirm. Please also confirm that the correct coordinate for the Costa Mesa station was used in AERSURFACE.
3. SFC Files, Albedo: The albedo between the old and new datasets do not match for many hours. Again, this may be an artifact of using the updated version of AERSURFACE, but please confirm.
4. SFC/PFL Files, Wind Direction: It appears that the updated dataset rounded wind direction to the nearest degree. Why was AERMET version 12345 run with different raw surface data? Please note, however, that not all wind directions appear to be rounded to the nearest degree as there are some cases when there is a value after the decimal point (example: January 5, 2005, hour 4).
5. SFC/PFL Files, Wind Speed: Again, it appears that there has been some rounding to the nearest tenth of a m/sec; however, there are some cases where the wind speed differences between the old and new datasets differ by more than a tenth of a m/sec. Why was the valid raw data input into AERMET different for the new dataset?
6. Wind Speed/Wind Direction: What are the starting thresholds for both the wind speed and wind direction sensor? Based on our conversation, many of the previously identified 'calms' were now modified to a wind speed of 0.28 m/sec. Please confirm this value is the greater of the wind direction or wind speed sensor starting thresholds.
7. SFC File, Missing Data Inconsistencies: In contrast to comment 6, there are now some instances when data previously identified as valid are now considered missing/invalid (example: January 11, 2005, hours 12, 13, 14, and 15). Please confirm.
8. SFC File, Pressure: The pressure values between the old and new datasets vary greatly. Please verify the difference.
9. SFC File, Cloud Cover: The cloud cover varies greatly between the old and new datasets. Please verify the difference.
10. Ozone Data: It appears that missing data in the new dataset was filled in differently compared to the old dataset. Please provide the guidance followed to fill in the missing data and the justification to change methodologies compared to data previously obtained through the SCAQMD website.

We look forward to hearing from you.

Thanks,
Elyse and John

Elyse Engel
Staff Engineer
Environmental Services Business Group

CH2M HILL
1737 North First Street, Suite 300
San Jose, California 95112
Direct 408.436.4936 x37432
Fax 408.436.4829
elyse.engel@ch2m.com

From: John.Frohning@CH2M.com
Sent: Tuesday, February 26, 2013 5:54 PM
To: jbaker@aqmd.gov
Cc: Elyse.Engel@ch2m.com; Jerry.Salamy@CH2M.com; slee@aqmd.gov; Benjamin.Beattie@CH2M.com
Subject: RE: Costa Mesa Meteorological Data Questions

Hi Jillian,
I am just following up on our conversation on Tuesday (2/19) of last week and checking on the status of the revised Costa Mesa AERMET files (including the Costa Mesa raw input data for Stage 1 of AERMET).
Let me know if you have any questions.
Thanks,
John Frohning
Air Quality Specialist
CH2M Hill

425-292-3087
1100 112th Ave. NE
Suite 400
Bellevue, WA 98004

From: Jillian Baker [mailto:jbaker@aqmd.gov]
Sent: Tuesday, February 19, 2013 8:57 AM
To: Engel, Elyse/SJC
Cc: Frohning, John/SEA; Beattie, Benjamin/SAC; Salamy, Jerry/SAC; McGregor, Keith/SAC; Tom Chico; Chris Perri; Sang-Mi Lee
Subject: RE: Costa Mesa Meteorological Data Questions

** WARNING ** This email contains a compressed file (e.g., ZIP), which is a file type often used to package & deliver viruses. Be VERY suspicious of ALL file attachments--ESPECIALLY if you do not know the sender. If you're in doubt about the legitimacy of this email, then DO NOT open the file attachment(s) before verifying with the sender.

Report suspicious emails to TAC, or your Regional IT Helpdesk if not supported by TAC.

File Name(s): CostaMesa_for_Consultant.zip
File Type(s): compressed/zip

The original message text is below.
++

Hi Elyse,

Attached are the files you requested.

Jillian Baker, Ph.D.
South Coast AQMD
21865 Copley Drive,
Diamond Bar, CA 91765
Direct: 909.396.3176

From: Elyse.Engel@ch2m.com [mailto:Elyse.Engel@ch2m.com]
Sent: Wednesday, February 13, 2013 9:22 PM
To: Jillian Baker
Cc: John.Frohning@CH2M.com; Benjamin.Beattie@CH2M.com; Jerry.Salamy@CH2M.com; Keith.McGregor@CH2M.com; Tom Chico; Chris Perri
Subject: RE: Costa Mesa Meteorological Data Questions

Hi Jillian,

Thank you for providing the revised 5-year dataset and clarification on the ozone data. To verify the responses to comments 2 through 9 below, based on our phone call last week, could you please provide the following additional data:

- Input and output files for AERMET Stage 1 through Stage 3
- Raw data used for AERMET Stage 1 processing

Please let me know if you have any questions about this additional request.

Thanks,
Elyse

From: Jillian Baker [mailto:jbaker@aqmd.gov]
Sent: Tuesday, February 12, 2013 3:15 PM
To: Engel, Elyse/SJC
Cc: Frohning, John/SEA; Beattie, Benjamin/SAC; Salamy, Jerry/SAC; McGregor, Keith/SAC; Tom Chico; Chris Perri
Subject: RE: Costa Mesa Meteorological Data Questions

Hi Elyse,

I believe that I have answered all your questions on the phone last week. The only outstanding response is how the missing data in the ozone file was calculated, which is described below. I am also attaching the csta5.sfc file for your use. This file is the same file as the one which was previously provided to you, with a change in the station location, which does not affect the modeled results. You should already have the csta5.pfl file to use.

Response to #10.
As you are aware, the 3 years of met data and ozone data posted on our website was sufficient for use in non-PSD permitting projects. As indicated on our website, we request that applicants contact us for the most recent and updated met data plus ozone or NO2 data for all PSD projects. The method used for filling-in missing ozone data for purposes of Tier 3 NO2 modeling was updated in response to the new federal 1-hour NO2 standard and has been used on previous PSD projects within the District. The procedure is as follows:

1 to 3 Consecutive Hours of Missing Data

1, 2, or 3 consecutive hours of missing ozone data was filled in by linear interpolation between non-missing ozone data on either side of the missing period.

More than 3 consecutive Hours of Missing Data

Ambient ozone in southern California exhibits a strong and distinct diurnal and seasonal pattern. That is, ambient ozone concentrations are highest in the spring and summer months and during the mid-day hours. Filling-in missing ozone data with the highest hourly concentration is overly and unreasonably conservative. For instance, it is unreasonable to use the peak hourly ozone concentration for the modeling period to fill-in missing hours at nighttime when ozone concentrations approach zero.

Instead, we extracted the maximum value for each hour of the day and month of the year. Thus, there were 12 sets (representing each month of the year) of 24 hourly (representing the 24 hours in the day) ozone values. In this manner, the diurnal and seasonal ambient ozone patterns are preserved. So missing ozone at 1 a.m. in December would be filled in with the maximum 1 a.m. ozone concentration for all the Decembers in the modeling period. Similarly missing ozone at 2 p.m. in July would be filled in with the maximum 2 p.m. ozone concentration for all the Julys in the modeling period.

Please let me know if you have further questions.

Jillian Baker, Ph.D.
South Coast AQMD
21865 Copley Drive,
Diamond Bar, CA 91765
Direct: 909.396.3176

From: Elyse.Engel@ch2m.com [mailto:Elyse.Engel@ch2m.com]
Sent: Wednesday, February 06, 2013 7:49 AM
To: Jillian Baker
Cc: John.Frohning@CH2M.com; Benjamin.Beattie@CH2M.com; Jerry.Salamy@CH2M.com; Keith.McGregor@CH2M.com
Subject: Costa Mesa Meteorological Data Questions

Hi Jillian,

Thank you for your time yesterday to discuss the revised 5-year Costa Mesa meteorological dataset processed with the updated version of AERMET (version 12345). We just wanted to follow-up on our observations from comparing the revised dataset to the original 3-year dataset. As discussed, we also reviewed the revised Ozone data and had a question about the inconsistencies between the previous 3-year dataset and the new 5-year dataset. We understand that many of the questions about the differences could be accounted for by using the new version of AERSURFACE; however, they are repeated below for verification.

Please review the following questions / comments and let us know if you would like to discuss in more detail:

1. SFC Files: The revised 5-year dataset processed with version 12345 has a coordinate inconsistent with the Costa Mesa station location. The coordinate included appears to be for the Crestline station. Please verify that Stages 1 and 3 of AERMET were preprocessed with the correct station location for Costa Mesa.
2. SFC Files: The surface roughness length is not consistent between the old and new datasets. We understand this may be an artifact of using the updated version of AERSURFACE, but please confirm. Please also confirm that the correct coordinate for the Costa Mesa station was used in AERSURFACE.
3. SFC Files, Albedo: The albedo between the old and new datasets do not match for many hours. Again, this may be an artifact of using the updated version of AERSURFACE, but please confirm.
4. SFC/PFL Files, Wind Direction: It appears that the updated dataset rounded wind direction to the nearest degree. Why was AERMET version 12345 run with different raw surface data? Please note, however, that not all wind directions appear to be rounded to the nearest degree as there are some cases when there is a value after the decimal point (example: January 5, 2005, hour 4).
5. SFC/PFL Files, Wind Speed: Again, it appears that there has been some rounding to the nearest tenth of a m/sec; however, there are some cases where the wind speed differences between the old and new datasets differ by more than a tenth of a m/sec. Why was the valid raw data input into AERMET different for the new dataset?
6. Wind Speed/Wind Direction: What are the starting thresholds for both the wind speed and wind direction sensor? Based on our conversation, many of the previously identified 'calms' were now modified to a wind speed of 0.28 m/sec. Please confirm this value is the greater of the wind direction or wind speed sensor starting thresholds.
7. SFC File, Missing Data Inconsistencies: In contrast to comment 6, there are now some instances when data previously identified as valid are now considered missing/invalid (example: January 11, 2005, hours 12, 13, 14, and 15). Please confirm.

8. SFC File, Pressure: The pressure values between the old and new datasets vary greatly. Please verify the difference.
9. SFC File, Cloud Cover: The cloud cover varies greatly between the old and new datasets. Please verify the difference.
10. Ozone Data: It appears that missing data in the new dataset was filled in differently compared to the old dataset. Please provide the guidance followed to fill in the missing data and the justification to change methodologies compared to data previously obtained through the SCAQMD website.

We look forward to hearing from you.

Thanks,
Elyse and John

Elyse Engel
Staff Engineer
Environmental Services Business Group

CH2M HILL
1737 North First Street, Suite 300
San Jose, California 95112
Direct 408.436.4936 x37432
Fax 408.436.4829
elyse.engel@ch2m.com