DOCKET
02-AFC-1
DATE MAY 28 2005
RECD. SEP 15 2005

System Impact Study

Proposed BEP II 591 MVA Generation Addition and DSTP Buck Boulevard to Devers 500-kV Transmission Line Integration to the Blythe Area High Voltage Interconnected Transmission System

Study Report

FINAL

WESTERN
AREA POWER
ADMINISTRATION
DESERT SOUTHWEST REGION
Transmission Planning

MAY 28, 2005

Prepared by: N. Saber

TABLE OF CONTENTS

	Page No.
1- EXECUTIVE SUMMARY	1
2- INTRODUCTION & PURPOSE	3
3- CONCLUSIONS	6
4- PROJECT DESCRIPTION	10
5- PROJECT PLAN-OF-SERVICE	16
6- STUDY RESULTS	26
7- STUDY ASSUMPTIONS	101
8- STUDY SCOPE	103
9- STUDY CASE DEVELOPMENT	106
10- POWER FLOW DISCUSSION	121
11- TRANSIENT STABILITY DISCUSSION	169
12-SHORT CIRCUIT DISCUSSION	172

LIST OF TABLES

Page No.

Table 1: Case 1 Summary Comparison's Overloaded Lines and Transformers... Without DPV2 project **N/A**

Table 2: Case 2 Summary Comparison's Overloaded Lines and Transformers... With DPV2 project **N/A**

Table 3: Case 3 and 4 Summary Comparison's Overloaded Lines and Transformers **N/A**

Table 4: Case 1 Report Overloaded Lines and Transformers ..... **N/A**

Table 5: Case 2 Report Overloaded Lines and Transformers ..... **N/A**

Table 6: Case 3 and 4 Report Overloaded Lines and Transformers ... **N/A**

Table 7: Short Circuit Results ... **N/A**

APPENDICES

Appendix A N-1 Contingency Analysis - Tables

Appendix B Short Circuit Results

Appendix C Stability Plots

ATTACHMENTS

Attachment #1 Remedial Action Scheme Blythe

Attachment #2 Study Plan

Acronyms and References

BEP II – Caithness LLC Proposed 520 MW generating plant at Blythe Calif.

BEP I – Blythe Energy LLC 520 MW generating plant at Blythe California.

DSTP – Desert Southwest LLC proposed new 500-kV transmission line between Buck Blvd Expanded Substation and Devers Substation

BEPTL – Florida Power Proposed upgrades in the Blythe area

ACSR – Aluminum Conductor Steel Reinforced

FPL - Florida Power and Light

BEP I – Blythe Energy LLC 520 MW generating plant at Blythe Calif.

DSW - Desert Southwest Region

EOR - East of River

IID - Imperial Irrigation District

MWD - Metropolitan Water District

NEPA - National Environmental Policy Act

NERC - North American Electric Reliability Council

SCE - Southern California Edison

WATS – Western Arizona Transmission system Task Force

Western - Western Area Power Administration Desert Southwest Region

California Independent System Operator – ISO

WECC - Western Electric Coordinated Council

PSLF - Power System Program

SOP - Standard Operating Procedure

RAS - Remedial Action Scheme

PST – Phase Shifting Transformer

Bypassed – Phase Shifter set at 0 degrees operating as a regular transformer, at times modeled with a jumper across the phase shifter

WECC Path 59 - The 161-kV line connecting Western's Blythe and Blythe SCE

EOR - East of River (EOR) or WECC Path 49 consists of six transmission lines:

Navajo – Crystal 500 kV (metered at Navajo)
Moenkopi – Eldorado 500 kV (metered at Eldorado)
Liberty – Mead 345 kV (metered at Liberty)
Perkins – Mead 500 kV (metered at Perkins)
Palo Verde – Devers 500 kV (metered at Palo Verde)
Hassayampa – North Gila 500 kV (metered at Hassayampa)

WECC Major Path Flow/Path Ratings

The transmission paths listed below are the major paths for California. The non-simultaneous rating of each path is listed.

	Transfer Path	Path Rating (MW)
Path 49	EOR	7550
Path 46	WOR	10118
Path 26	M-V	3400/3000
Path 27	IPPDC	1920
Path 65	PDCI	3100
Path 66	COI	4800(N-S)/3675(S-N)
Path 45	CFE-SDG&E	800

Reference Studies and Projects:

1. Western prepared a SIS entitled "Julian Hinds – Buck Blvd Interconnection" (Julian Hinds) dated August 14, 2004.
2. Western's SIS for the Interconnection of Buck Boulevard to Midpoint 161/ 230 kV, dated December 2004
3. Western's SIS for the Interconnection of Blythe Energy (BEP I), dated September 2001
4. The Blythe Area Regional Transmission (BART) study of the Blythe II project was prepared by K.R. Saline in 2002-2004. This study reviewed transmission solutions for transporting BEP II generation to California
5. Accepted Path Rating Study Report Of the Southwest Power Link and Palo Verde – Devers 500 kV Series Capacitor Upgrade Project -Prepared by the WECC Peer Review Group and Western Arizona Transmission System (WATS) Task Force.
6. The comprehensive progress report entitled "SWPL & PV – Devers 500 kV Series Capacitor Upgrade Transfer Capability Study".
7. The DPV2 project has a planned rating of 1,200 MW. Sponsored by SCE, under review by WECC and WATS.
8. APS-TS5 Project
   Arizona Public Service (APS) is developing a plan to build a 500 kV transmission line from a switchyard at or near the Palo Verde Generating Station to the proposed TS5 Substation, which is to be located in the northwest portion of the Phoenix Metro area.

EXECUTIVE SUMMARY

1. EXECUTIVE SUMMARY

Western Area Power Administration DSW Region (Western) and Caithness Blythe II, LLC (Caithness or BEP II) together with the Desert Southwest Power, LLC (DSTP) by Letter Agreement No. 04-DSR-11156 and in accordance with Western's Open Access Transmission Service Tariff agreed to conduct technical studies to examine the impact of the BEP II/DSTP on the DSW transmission. Initially the project was proposed to be in service in April, 2006, a more realistic in service is in the 2007-2008 time frames.

Caithness application to Western is for connecting the BEP II generation project (520MW) to Western's transmission system. Caithness has not requested Western for Firm Transmission Service on Western's DSW transmission system.

Without significant transmission upgrades to the existing 161 kV system and or construction of new 230 kV or 500 kV transmission facilities the BEP II generation is held captive at Blythe.

In order for Western to provide the capability to distribute the full BEP II 520 MW output through the 161 kV transmission facilities major reinforcements of Western, IID and SCE 161 kV systems are needed as outlined in section 3 of this report. Furthermore, upgrades of the existing 161 kV facilities may not be economically or technically justifiable as compared with other transmission solutions. Existing 161 kV facilities can not support any more than the output of one of the BEP II generators for access to non firm market opportunities provided that Western's Blythe RAS is expanded and transmission capacity is available.

Therefore, DSTP is proposing to construct a 500 kV transmission line, approximately 118 miles long, 2156 kcmil, 2conductor per phase from the 500 kV collector bus at the expanded Buck Boulevard substation (switchyard) to the SCE Devers substation. At this time, significant responsibilities concerning the DSTP are not clearly defined, such as operational control area boundary, design, construction and maintenance. The DSTP 500 kV transmission line to Devers is intended to become the scheduling path to the California market for BEP II's generation.

In summary, study results demonstrate that the proposed BEP II power plant with a new associated 500 kV transmission line as proposed by DSTP presents no adverse impacts on Western's Desert Southwest Region (DSW) transmission system in accordance with the WECC, NERC Reliability Criteria and Western's Requirements for Interconnection. As part of project facility improvements Western will expand the Blythe area Remedial Action Scheme and the Blythe Substation Operating Procedures to protect the 161-kV transmission system from induced power flows through the BEP II connection with the Expanded Buck Boulevard Substation.

The study results indicate that with the addition of DSTP, Westerns 161 kV system is , as expected, relieved of many of the system overloads for N-1 and N-2 outages. Critical Outage to Western's system is an outage of the DSTP. Operating studies will determine specific operating procedures and BEP II generation curtailment necessary following a DSTP outage.

The development of the DSTP Buck Boulevard to Devers 500 kV transmission line has major effects on the high voltage interconnected transmission system. The proposed line alters power flows on path 49 and path 42 between Arizona and California. Moreover, DSTP and BEPII can contribute to an increase in import capability into the SCE Devers system and adversely impact loading of the Devers west system. SCE would have to determine the impact of the DSTP interconnection at Devers.

This SIS should not be mistakenly considered as a Regional Planning Study for the Blythe area transmission system. The WECC line rating process/WATS reviews will investigate the cumulative impact of all projects proposed in the area, determine mitigation actions and assign responsibility to solve problems caused by any of these projects.

The next step in the process is to perform a System Facilities Study (SFS). The SFS should include the identification of alternatives, construction schedule, and a cost estimate for the equipment modifications and or upgrades required at Western's Blythe Substation.

INTRODUCTION

&

PURPOSE

2. INTRODUCTION AND PURPOSE

The purpose of this SIS is to identify the impact of integrating the BEP/DSTP Project to the DSW Transmission System in the area of Blythe California ensuring that the existing transmission system limitations are not exceeded while maintaining inter-regional reliability. The power flow and stability studies are required to ensure that BEP II generation can be integrated into the regional interconnected high voltage transmission system in accordance with the Western Systems Coordinated Council (WECC) "Reliability Criteria" and Western's Interconnection Requirements. Technical studies are performed to determine what additions and modifications to the existing DSW transmission system to reliably deliver the proposed 520-MW BEP II generation to various markets in the Western United States starting by the year 2008.

This System Impact Study Report (SIS) summarizes the results of technical studies completed by Western's Desert Southwest Regional Office (DSW) under agreement No. 04-DSR-11156 with Blythe and DSTP.

BEP II / DSTP requested Western to prepare in a single response a SIS for their request to connect 520 MW new generation from the proposed BEP II power plant in the Blythe area as well as terminate a 500 kV 118 mile long new transmission line originating from the Southern California Edison Company (SCE) Devers Substation. Western's 161 kV transmission system is contractually committed, there is no ATC to offer BEP II. In fact, Western has implemented a RAS to curtail BEP I generation and protect the 161 kV lines connected at Blythe for certain N-1 and N-2 operating conditions.

The BEP II generation is in addition to the BEP I power plant (520MW) already in operations and connected to Western's Buck Boulevard 161 KV. Western completed the development of the Buck Boulevard 161 KV Switchyard and integrated the BEP I to the interconnected transmission system in the Blythe area in September, 2001.

The BEP II generation project is intended to be a duplication of BEP I. BEP II is proposed to consist of two gas turbines with a maximum operating rating of 175MW each, one steam turbine with a maximum operating rating of 185MW, and an auxiliary load of approximately 15MW.

With the addition of BEP II there will be a total generating capability in the Blythe area of 1040MW. The site for the plant has not yet been determined. This report assumes that the plant and its 500 kV collector bus are located on a site proposed adjacent to the existing BEP I power plant. The expansion of Western's Buck Boulevard is necessary to accommodate new facilities associated with BEP connection and will be referred to as the "Expanded Buck Boulevard Substation or BEP II 500".

Western conducts its SIS's in accordance with the applicable tariff rules and queue. Therefore, for the BEP II/DSTP interconnect request Western will conduct its evaluation and prepare studies as follows; (1) As if Western is not making any modifications to its system to accommodate any other upgrades, i.e. no other project are considered in the queue ahead of BEP I and those upgrades proposed by FPL as part of their BEPTL modifications explained below are not approved for construction, (2) All or part of the FPL BEPTL modifications are constructed and BEP II/DSTP is a system addition that follows BEPTL

Florida Power and Light (FPL) Owner of the Buck Boulevard (Buck Blvd) power plant (BEP I) in Blythe Arizona, has made two interconnection requests of Western ahead of Caithness/DSTP these are; (1) First project request "The Buck-Blvd to Julian Hinds Interconnection Request" to terminate at the Western Buck Blvd 161 kV Substation a proposed new 67.4 mile single circuit 230 kV line from the Julian Hinds substation, this line would be constructed and owned by SCE (2) the second project request " The Buck-Blvd to Midpoint Interconnection Request", to terminate at the Western Buck Blvd 161 kV Substation a proposed new 6.7 mile single circuit 161 kV line from a proposed new "Midpoint" substation with a loop in tap connection to the existing Devers to Palo Verde 500 kV line, this line would also be constructed and owned by SCE. FPL may decide that both interconnections are needed and proceed with construction of both projects. Western has completed its required SIS's. The Buck-Blvd to Midpoint interconnection request was completed in December, 2004 and the Buck Blvd to Julian Hinds interconnection request was completed in August, 2004. As of this time, FPL has not reached a decision on its construction options. The two interconnections requests made by FPL for projects the Blythe area are referred to as the Blythe Energy project transmission line modifications (BEPTL). The BEPTL projects are scheduled for an in-service date by 2008.

The DSTP must obtain an acceptable line rating through the WECC process. The WECC line rating process is an independent process from this SIS. Normally such a process takes over a year to complete the WECC required peer reviews. Also, the Arizona WATS committee will need to conduct its own reviews because BEP II and the DSTP, in this SIS, connect to the Arizona system. The WECC line rating and WATS reviews could be combined.

It is important to note that in order for Caithness to successfully develop BEP II a transmission solution to transport the generation to the California market is necessary. Economic evaluation of transmission alternatives is not part of this SIS. Among these alternatives are:

1. Construct the DSTP project with a tie Western. This project ties a new 500 kV line between Western's Buck Boulevard Substation and Devers and is studied as part of this SIS.

2. Participate with SCE in the development of a proposed 500 kV transmission line between SCE's Midpoint Substation transmission. This is a proposed substation part of the FPL requested upgrades in the area of Blythe.

3. Obtaining scheduling rights on the SCE Palo Verde to Devers 500 kV # 1 line (PVD1)

4. The BART study had identified feasible transmission upgrades to the IID system including the construction of a 230 kV double circuit line from Buck Blvd to the IID Midway Substation

CONCLUSIONS

3. CONCLUSION

The following conclusions are developed as a result of this study:

1. In order to interconnect BEP II generation and satisfy industry accepted Reliability Criteria and Western's System Performance Standards, in addition to the facilities at the Buck Boulevard substation associated with the new resource, a 500 kV line between Buck Blvd and Devers is necessary to deliver the BEP II full output to markets in California.

2. The proposed DSTP will strengthen the reliability and security of the interconnected transmission system in the Blythe area serving loads in Arizona and California. The DSTP 500-kV transmission line unloads some of the flows on the 161 kV system. The new line increases the import capability into Devers and impacts distribution of power on the west of Devers system. The full impact of the line on SCE's system will be determined by SCE.

3. The proposed DSTP causes no violations of planning criteria on any of Western facilities for N-1 or credible N-2 outages. The DSTP may have significant impact on the SCE and IID systems. Impacts and required mitigations are to be determined by affected utility. It is Western's expectation that SCE will prepare an independent SIS for the termination of the DSTP at its Devers 500 kV Substation. Western will not recommend or construct projects to mitigate impacts on IID's and SCE's system. Caithness will need to work with owners of any impacted system to determine appropriate mitigations.

4. This SIS has determined that the BEP II and DSTP 500-kV line connected to the Buck Blvd and Devers Substations presents no negative impact to Western's system with the system operating under system normal and N-1/N-2 outage conditions, provided that RAS schemes required by this report are implemented. This is true if the project was connected to the existing system without the additions of those projects proposed by FPL. Similarly, there is no negative impact to Western's system if the project is connected after implementation of the Buck-Julian Hinds interconnection or after the implementation of the Buck Blvd Midpoint interconnection or if both of these projects are connected to Western's system.

5. A RAS requirement of Western for the interconnection of BEP II /DSTP to its 161 kV system is a modification of WALC RAS #3 which monitors the line flows on those lines connected at the Blythe 161 kV substation. The 500/161 transformer would be tripped for if power flows into the 161 kV system is above some value to be determined in Western's operating studies for this interconnection.

6. A remedial action scheme is required to implement tripping two units at BEP II to mitigate stability problems observed for the outage of the DSTP Devers-Buck Blvd 500 kV line. Also SCE will need to make its assessment and mitigation of the impact of an N-2 Ramon Mirage and Coachella –Devers 230 kV line outage.

7. The Caithness/DSTP Project will have no impact on Western's rates in the short and long run.

8. BEP II /DSTP may be responsible for other upgrades as determined by the peer review in the line rating process required by WECC as well as the Arizona system reviews conducted by the WATS committee. Western has not been requested to present this project to the WECC and WATS forums and this is not part of this SIS effort.

9. The scheduling of the full output of BEPII generation on the DSTP unloads some power flow on Palo Verde – Devers 500-kV line as shown on incremental flow diagrams.

10. When power flows are into the 161 kV bus through the 500/161 tie between the Buck Blvd and BEPII, as for the condition of an outage of DSTP, and Western's Blythe area RAS alarms for an overload condition on any of the lines out of Blythe, Western will require curtailment of BEP II generation to relieve the overload condition.

11. Unscheduled flow from the 161 kV buck Boulevard system is to flow thorough the 500/161 transformer at Buck Boulevard , with BEP II connected to the Blythe 161 kV bus as proposed by Caithness. The sponsors may decide to control this loop flow and request Western to add a 161 kV phase shifter in series with the 161/500 kV transformer at Buck Boulevard. A separate study is needed to evaluate this phase shifter requirement, system performance and the RAS procedures associated with this connection, and is not part of this SIS.

12. If the DSTP is delayed and not completed when BEP II is ready to go into-service, Western could permit one BEP II unit to operate and have access to non-firm market opportunities. The WALC RAS #3 would be modified such as before curtailment of the BEP I generation the 500/161 transformer is tripped when power flows on any of the lines out of Blythe 161 becomes in excess of emergency rating.

13. As an alternative to the construction of the DSTP is to distribute the 520 MW generation output of BEP II through Western facilities. This includes a major reconstruction of Western's 161 kV transmission facilities. Additionally, there may be a need to rebuild the IID 161 kV lines between Blythe to Niland and

Blythe to Knob as determined by IID. Also, other transmission reinforcements may be needed by IID. A separate study effort, not part of this SIS is required.

14. No post- transient stability violations are observed with BEP II at 520 MW and DSTP.

15. Results of short circuit analysis show that the addition of the BEP II 520 MW does not cause unacceptable increase of fault duty at Western substations or at any of the adjacent substations one bus away. Fault currents are maintained below the interrupting rating of existing Western circuit breakers.

16. BEP II/DSTP will fund relay coordination and some control and panel modifications at Blythe 161 kV substation Western's designers will define this work at a later time.

17. A Facilities Study will be required to determine the facilities and upgrades required to interconnect the proposed Blythe II project beyond 2008. The study scope will be determined after a SFS agreement is approved between Western and Caithnes/DSTP.

18. The following is a preliminary assessment of upgrades of the Western transmission facilities to integrate the 520 MW generation output of BEP II to, only, Western's transmission system, if the DSTP is not approved.

    In order to distribute the power output of BEP II through Western's Blythe 161 kV bus a major reconstruction of Western's 161 kV transmission facilities South of Parker and in the Yuma area becomes necessary. As a preliminary assessment, the following Western facilities will need to be reconstructed for BEP II 520 MW operations:

    a. Parker Substation - Replacement of four 6.9/161 kV generator step up transformers, Rebuild all 161 kV transmission lines out of Parker for 230 kV operation.
    b. Gila Substation - Rebuild all 161 kV transmission lines out of Gila Substation for 230 kV operations.
    c. Knob Substation - Rebuild all 161 kV transmission lines out of Knob Substation for 230 kV operations.
    d. Dome Tap Substation - Rebuild all 161 kV transmission lines out of Dome Tap Substation for 230 kV operations.
    e. Kofa Substation - Rebuild all 161 kV transmission lines out of Kofa Substation for 230 kV operations.
    f. Goldmine Tap Substation - Rebuild all 161 kV transmission lines out of Goldmine Tap Substation for 230 kV operations.
    g. Headgate Substation - Rebuild all 161 kV transmission lines out of Headgate Substation for 230 kV

h. Additionally, there could be a need to rebuild the IID 161 kV lines between Blythe to Niland and Blythe to Knob or other transmission reinforcements as recommended by IID.

PROJECT DESCRIPTION

4. PROJECT DESCRIPTION

Based on information provided by Caithness / DSTP and its consultants, the proposed BEP II Project is to be a natural gas-fired combined-cycle power plant. Caithness proposal is that the plant is located adjacent to the BEP I and the Buck Boulevard 161 kV Substation in Blythe, California. The proposed operation date is July 2008. The Project's development would consist of two gas fired combined cycle generating unit (CTG) and one steam turbine unit (STG), with a capacity of 535 MW peak, 520 MW nominal.

Each of the generator unit will have a dedicated step-up transformer bank, consisting of a three-winding, step-up transformers, 16-161/500 kV, 175 MVA for the CTG and 185 MVA for the STG. Load at the generating station will normally be supplied from the 16/4.16 kV auxiliary transformers, which are connected to the terminals of the proposed generators.

The BEP II generators will be connected to a collector bus "BEP II 500" 500 kV 4-breaker ring-bus and connected with the Expanded Buck Boulevard 500 kV Substation (BEP II 500), as shown on one line diagram provided by Caithness included on the next page. The Project propóses to construct a new 118-mile long transmission line, 500 kV with 2 bundled 1033 kcmil ACSR line conductor from the SCE Devers Substation to Buck Blvd Extended Substation and terminate at the BEP II 500 bus. Figure 1 is a Vicinity Map that shows the Project in relation to the Blythe area transmission facilities.

TRANSMISSION SYSTEM ENGINEERING - FIGURE 3

Blythe Energy Project Phase II - Existing Transmission System, Proposed BEPTL Projects and Blythe II Interconnection with DSTWP 500 KV Line in Blythe Area

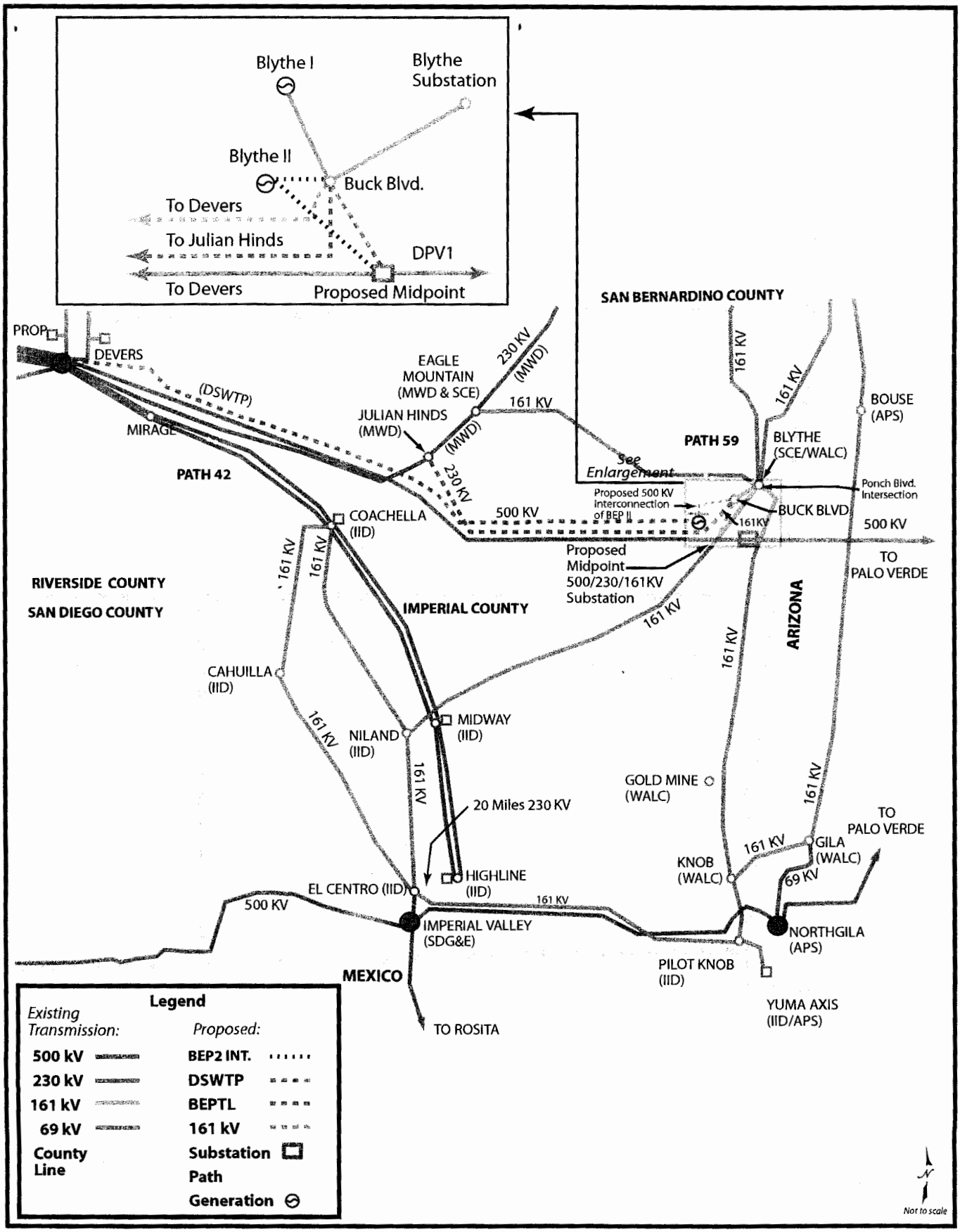

CALIFORNIA ENERGY COMMISSION, SYSTEMS ASSESSMENT & FACILITIES SITING DIVISION, JUNE 2005

SOURCE: SCE and CEC Staff

TRANSMISSION SYSTEM ENGINEERING - FIGURE 3

Blythe Energy Project Phase II - Existing Transmission System, Proposed BEPTL Projects and Blythe II Interconnection with DSTWP 500 KV Line in Blythe Area

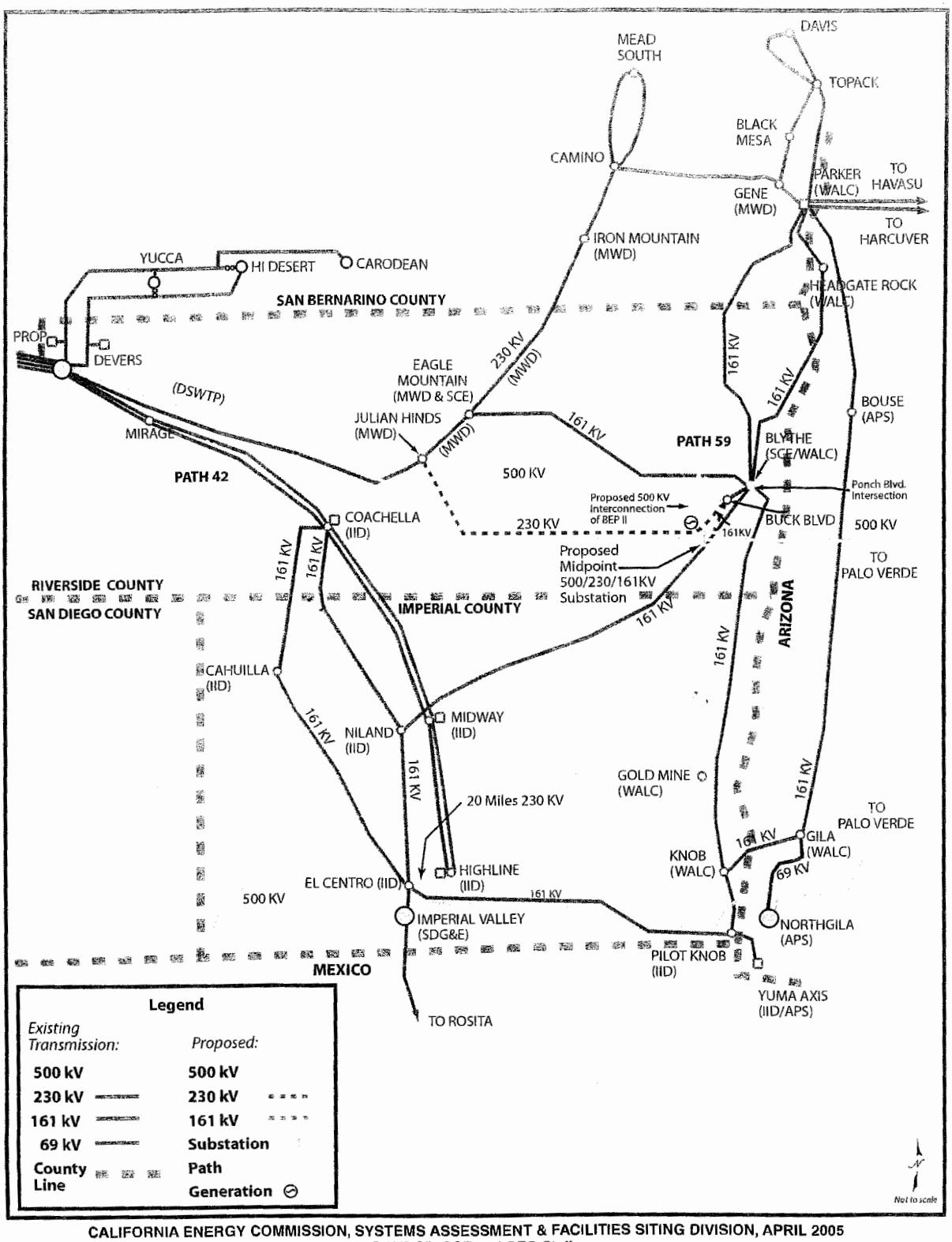

CALIFORNIA ENERGY COMMISSION, SYSTEMS ASSESSMENT & FACILITIES SITING DIVISION, APRIL 2005

SOURCE: SCE and CEC Staff

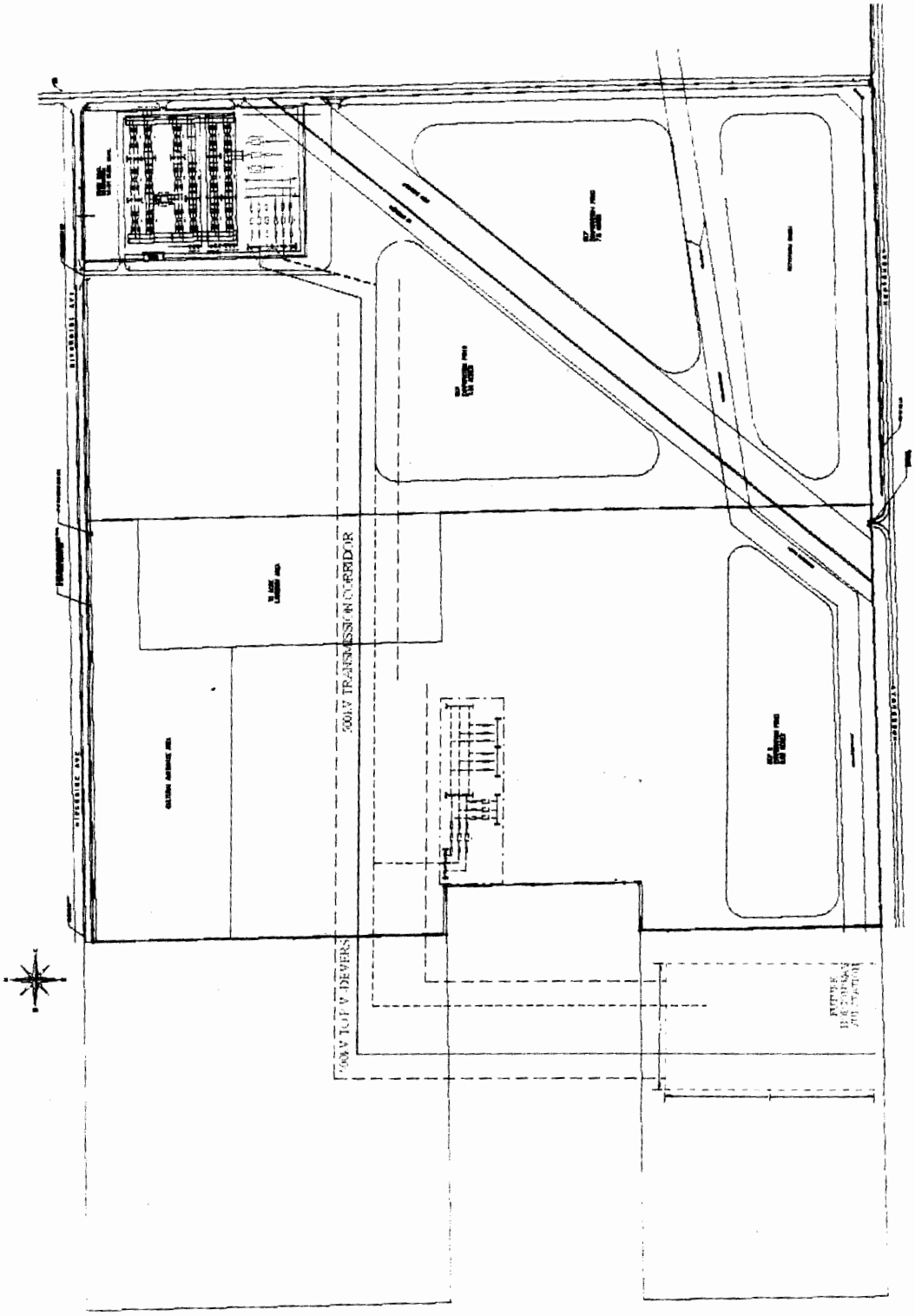

Cadiente Consulting

DATE: 07/25/03

REV: A

DSWTP

BLYTHE SITE

GENERAL LAYOUT

Project Plan-of-Service

5. PROJECT PLAN –OF- SERVICE

1- Western will design, furnish equipment and construct all facilities in the Expanded Buck Blvd Substation required for the proposed interconnection. The Buck Blvd Substation was designed to be modified for 230-kV operations and as a result of a project earlier in the Queue this bus may have been upgraded to 230 kV and there would be an option to connect to 230kV or 161 kV. A one-line diagram sketch of the Substation showing the proposed interconnection and 161/ 500-kV transformer and 500-kV line termination is included in the following pages.

2- The upgrades at the Expanded Buck Blvd substation mainly includes:

1. Construct breaker bay and terminate the 500 kV 2 bundled 1033 kcmil ACSR line conductor from Devers Substation
2. Install and connect 500/161/230 kV 375 MVA transformer
3. Add one new 161 kV bay or 230 kV for termination of 500/161/230 kV transformer. At this time, this bay is called out as 161 kV Western will determine in its SFS if this termination should be at the 161 or 230 kV voltage level
4. Make necessary control and protection changes in the control room to accommodate equipment associated with new interconnection facilities.
5. Install Control Area boundary Hi side metering:
   a. Install coupling capacitor voltage transformer, metering accuracy.
   b. Install current transformer, metering accuracy
   c. Install a Meter

5. Install new duplex Switchboard section in Western's control room complete with controls and protection for the proposed new line and transformer.

3- DSTP is responsible for design, construction and obtaining environmental clearances necessary to develop the proposed new 500-kV transmission line from Devers to the Expanded Buck Blvd Substation. Western will terminate the line's approach span at the Buck Blvd Substation. The land in the Buck Blvd Substation is considered disturbed, within the substation fenced area there is sufficient space to accommodate the facilities associated with the proposed BEP II 500 kV termination.

Study Results

6. STUDY RESULTS

Power Flow

The addition of BEP II generation with associated DSTP 500 kV line connected to Devers 500-kV will have no adverse impact on Westerns transmission system. The BEP II generation is transported on the 500 kV DSTP line to Devers with 80% of the power going to Edison's west of Devers system and the remaining 20% is displacing power transferred on the PVD1 line from Palo Verde. Same power distribution is expected with PVD2. Overloads are identified in SCE's, IID's areas for certain contingencies. IID, SCE and MWDP should re-evaluate their system using the new BEPII /DSTP Blythe area configuration to verify the findings Western has made regarding the loading on their respective transmission lines and facilities, respectively.

As discussed below, the results of this SIS identified that with the BEP II and the DSTP and previous interconnection requests to Western ahead of BEP II in the transmission queue:

For each of the four starting cases described in section 8 below, load flow simulations of the bulk power system were conducted for the base case and single contingencies for lines and transformers to determine the Project impact. Table 1, 2 ,3 and 4 summarizes results of the contingency analysis.

The BEP II and DSTP additions to the interconnected system presents no negative impact to ratings of existing WECC recognized path. The addition of a new 500 kV transmission element presents an improvement to the overall regional system and as expected flows on Path 49, 42,52 and Path 9 are altered and the flows are observed to be within ratings.

With the introduction of DSTP to the Blythe area transmission system, the SCE transmission system needs to be evaluated by SCE to determine necessary mitigation. SCE will be conducting interconnection studies for the connection at the Devers terminus of the new BEP II 500 to Devers 500 kV. SCE may require certain facility upgrades, Remedial Action Schemes (RAS), or implementing CALISO congestion management.

This project improves the operations of the 161 kV transmission system connected to the Buck Boulevard substation, The Project also reduces the East of River (EOR) flow.

Table 4,5,6 provides a summary of the results for N-0 and N-1 for a starting case post project as described in Study Plan. Additionally, Table 1,2 and 3 compares results of contingency analysis conducted on several cases each representing the system post project. The different system conditions modeled in these starting cases include with MWD pumps off, with and without the Julian Hinds to Buck Blvd interconnection and with and without the Midpoint to Buck Blvd interconnection

Power Flow Plots Case 1

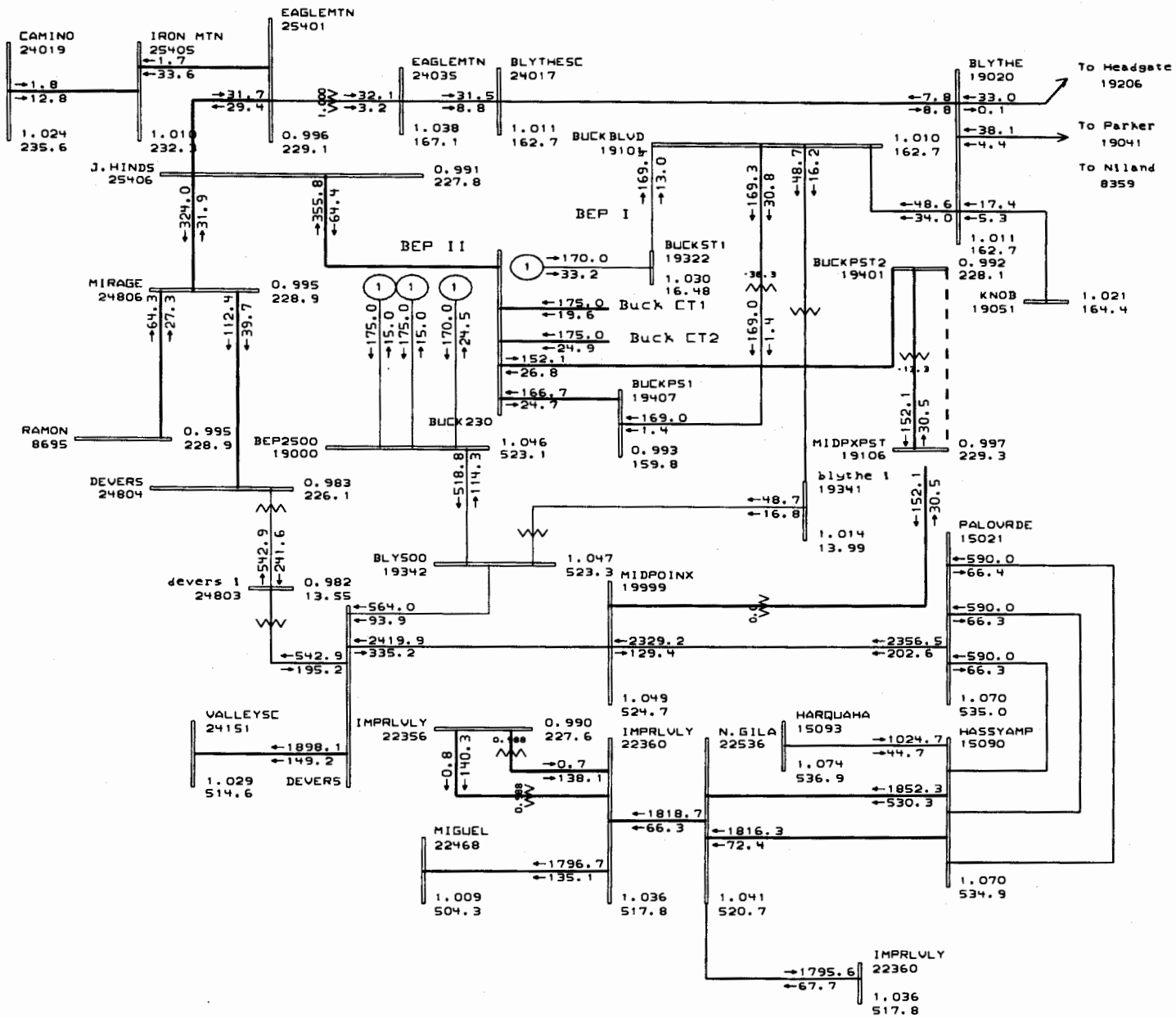

General Electric International, Inc. PSLF Program MW/MVAR Sat Jun 25 14:56:59 2005

GENERAL ELECTRIC COMPANY

bep2_a.drw
case1_a_wopumps.sav
Rating = 1

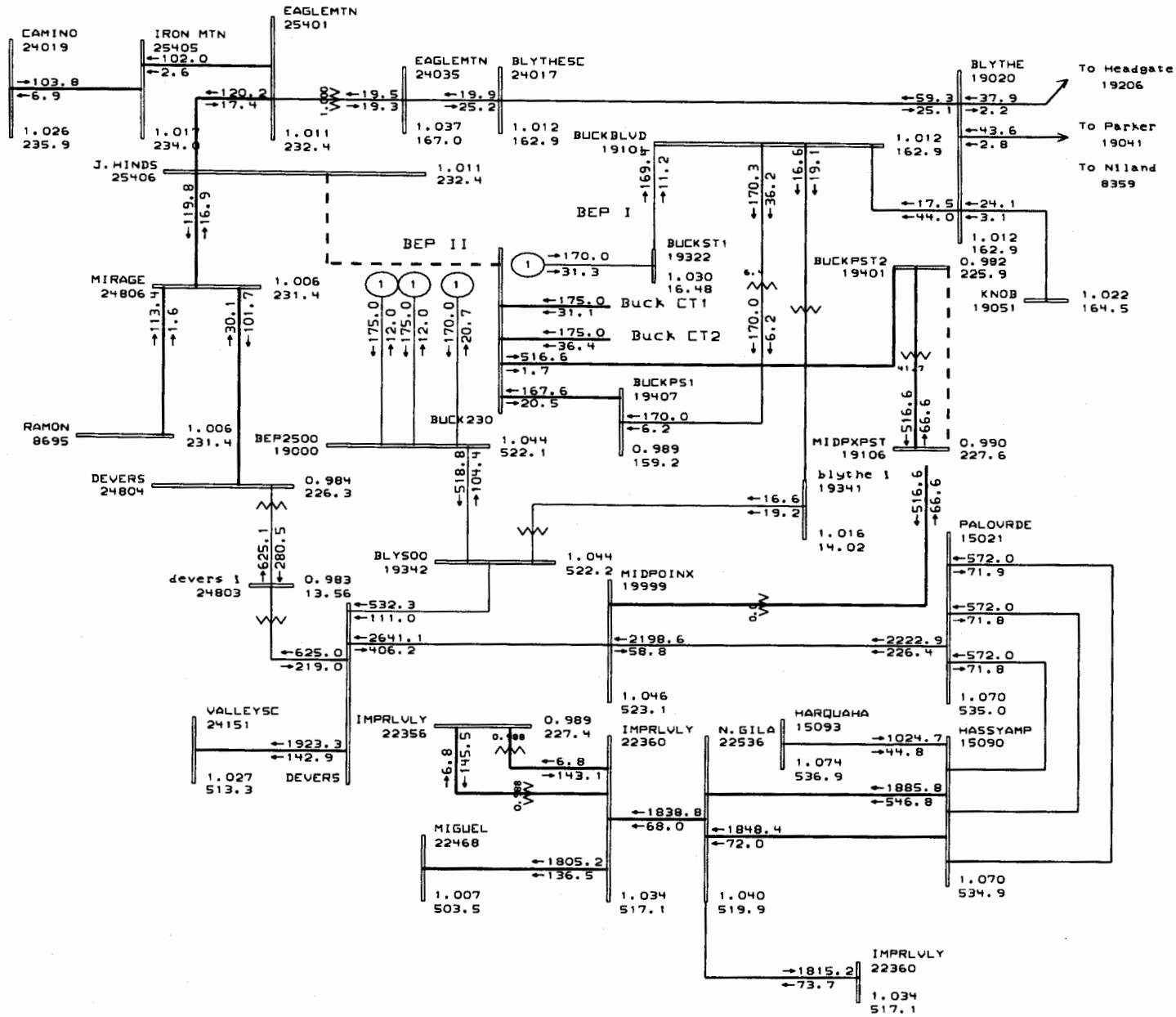

General Electric International, Inc. PSLF Program MW/MVAR Sat Jun 25 14:58:31 2005

GENERAL ELECTRIC COMPANY

bep2_a.drw
lb.sav
Rating = 1

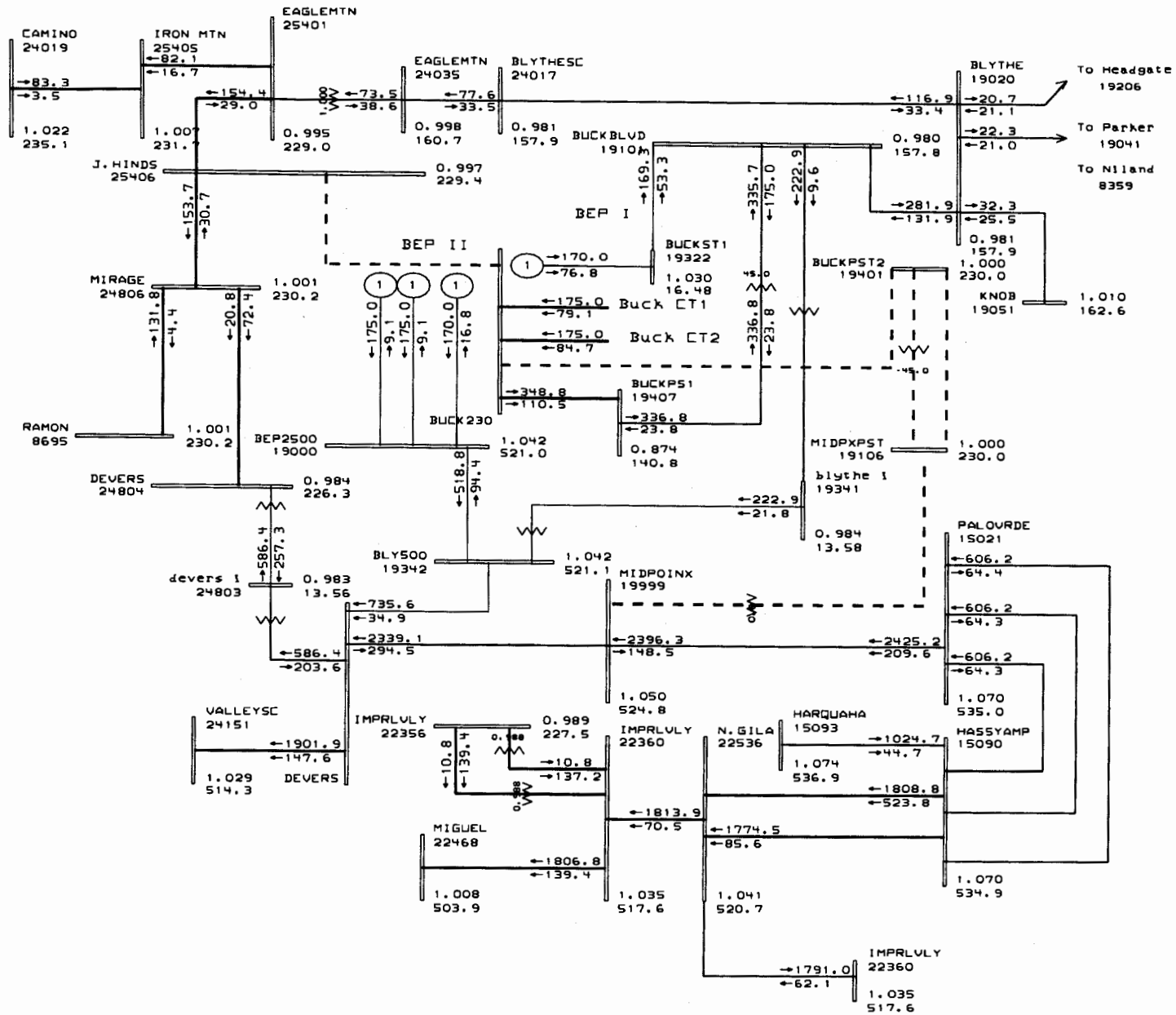

General Electric International, Inc. PSLF Program MW/MVAR Sat Jun 25 14:59:45 2005

GENERAL ELECTRIC COMPANY

bcp2_a.drw
lc.sav
Rating = 1

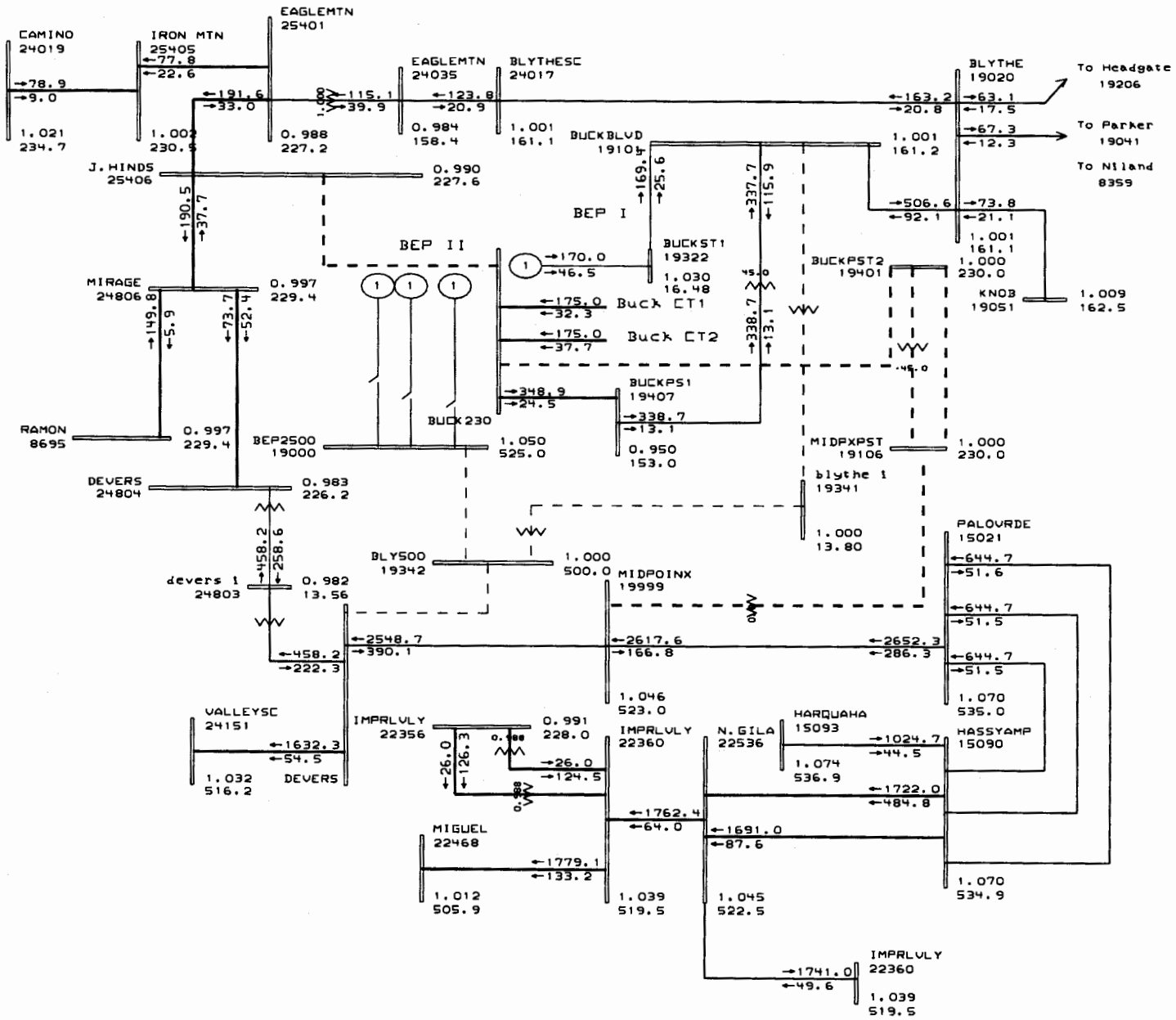

General Electric International, Inc. PSLF Program

GENERAL ELECTRIC COMPANY

MW/MVAR

Sat Jun 25 15:07:34 2005

bep2_a.drw
1d.sav
Rating = 1

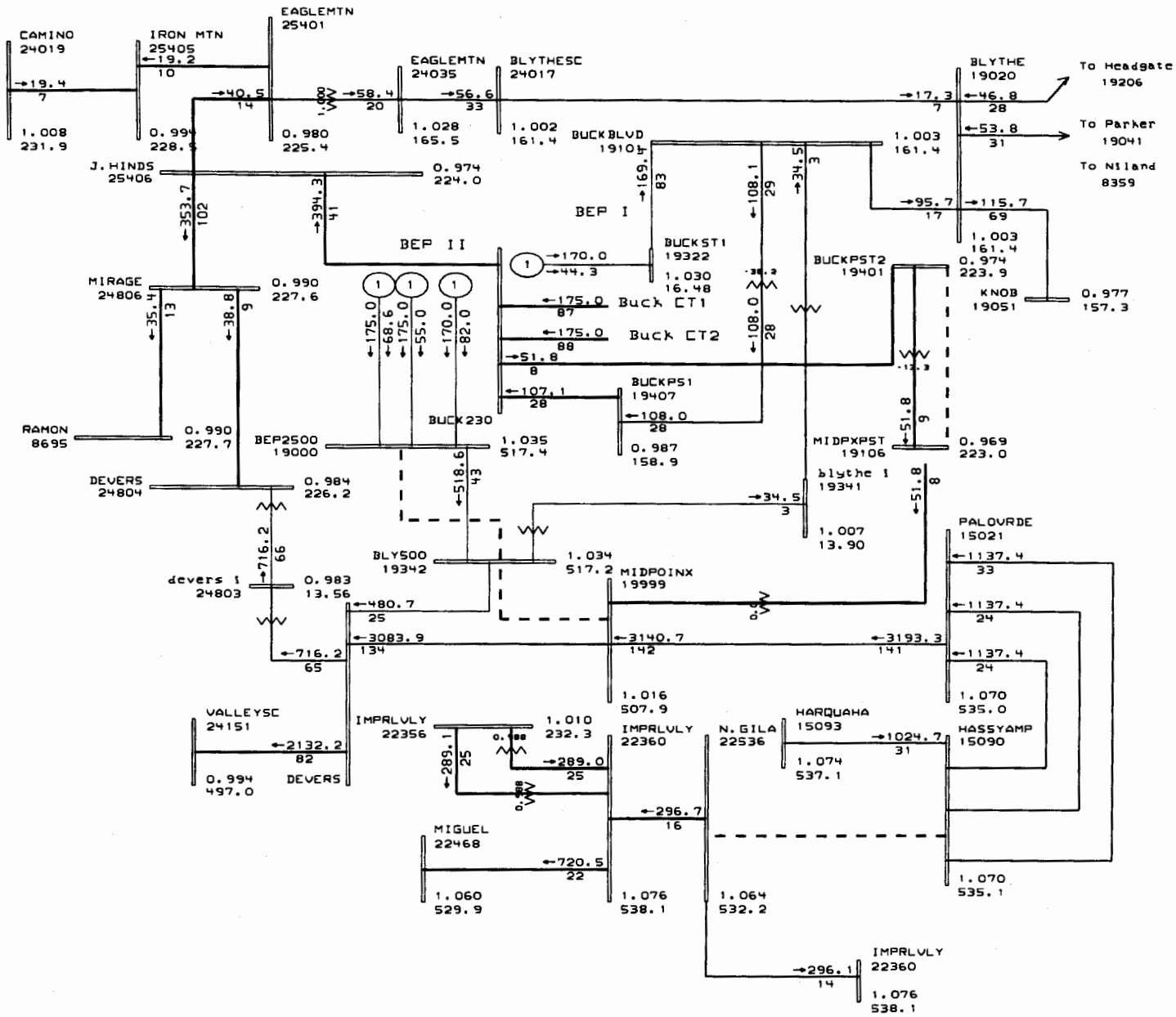

General Electric International, Inc. PSLF Program MW/Pct Wed Jun 22 14:27:31 2005

GENERAL ELECTRIC COMPANY

bep2_b2.drw
t1.sav
Rating = 1

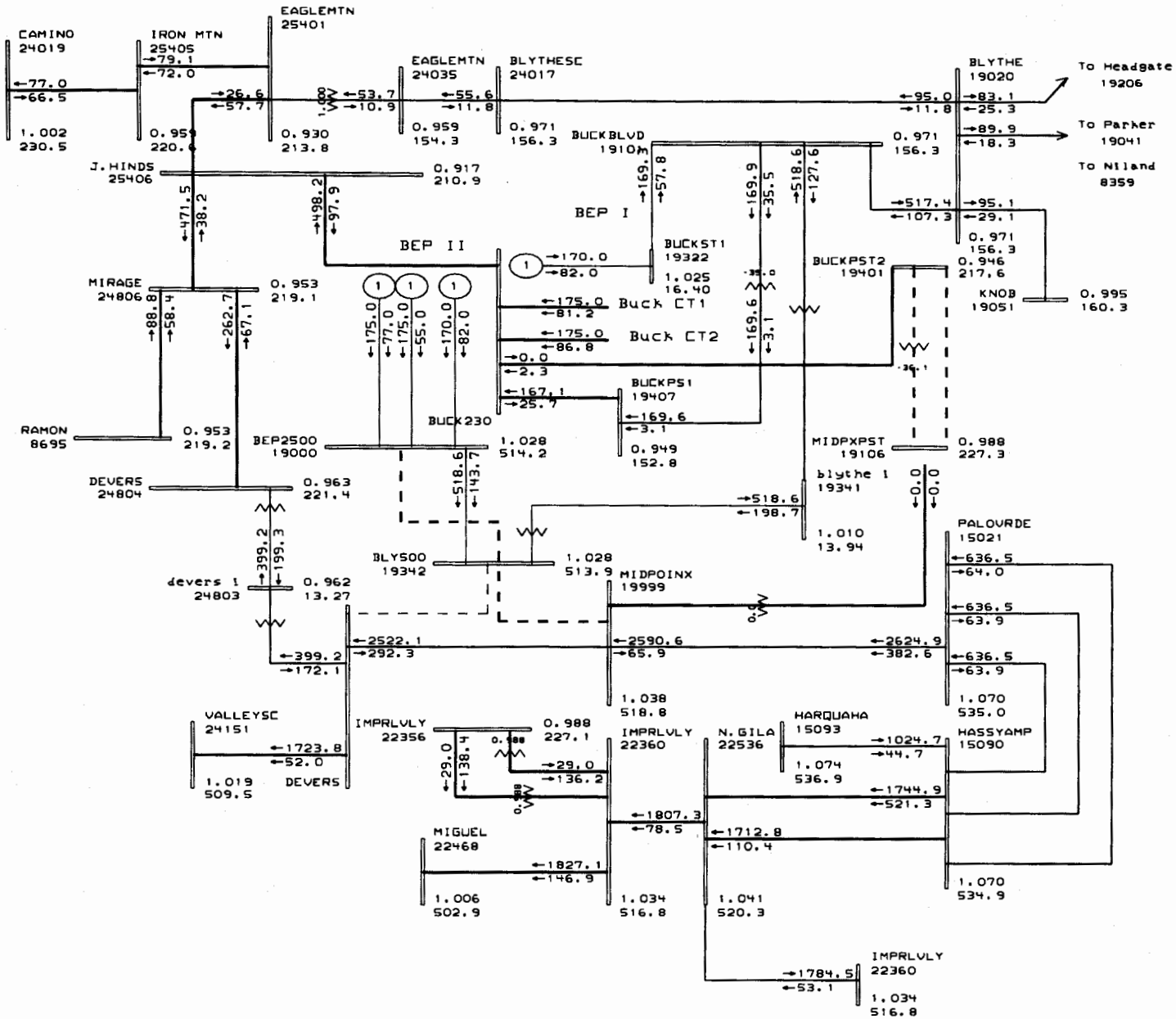

General Electric International, Inc. PSLF Program MW/MVAR Wed Jun 22 14:15:16 2005

GENERAL ELECTRIC COMPANY

bep2_b2.drw
tic.sav
Rating = 1

Table 1
Summary Case Comparison's
Transmission Lines and Transformers Overloads
For System Configurations w/o PVD2 "Case 1"

Contingency	Monitored Element	Area	Rating	1_a	1_b	1_c	1_d
ALIS	BUCKBLVD 161.00-BUCKPS1 161.00 ck=1	WAPA L.C.	375 MVA			1.009	
ALIS	HAVASU12 13.20-HAVASU 230.00 ck=1	WAPA L.C.	100 MVA	1.028	1.029	1.036	1.036
ALIS	HAVASU34 13.20-HAVASU 230.00 ck=1	WAPA L.C.	100 MVA	1.028	1.029	1.036	1.036
ALIS	HAVASU56 13.20-HAVASU 230.00 ck=1	WAPA L.C.	100 MVA	1.028	1.029	1.036	1.036
ALIS	HOOVERA4 16.50-HOVRA3A4 230.00 ck=1	WAPA L.C.	135 MVA	1.045		1.066	1.045
BLY500 500.00-DEVERS 500.00 ck=1	HAVASU12 13.20-HAVASU 230.00 ck=1	WAPA L.C.	100 MVA	1.049	1.048		
BLY500 500.00-DEVERS 500.00 ck=1	HAVASU34 13.20-HAVASU 230.00 ck=1	WAPA L.C.	100 MVA	1.049	1.048		
BLY500 500.00-DEVERS 500.00 ck=1	HAVASU56 13.20-HAVASU 230.00 ck=1	WAPA L.C.	100 MVA	1.049	1.048		
BLY500 500.00-DEVERS 500.00 ck=1	MIDPXPST 230.00-BUCKPST2 230.00 ck=1	WAPA L.C.	600 MVA		1.042		
BLYTHE 161.00-BLYTHESC 161.00 ck=1	HAVASU12 13.20-HAVASU 230.00 ck=1	WAPA L.C.	100 MVA				1.047
BLYTHE 161.00-BLYTHESC 161.00 ck=1	HAVASU34 13.20-HAVASU 230.00 ck=1	WAPA L.C.	100 MVA				1.047
BLYTHE 161.00-BLYTHESC 161.00 ck=1	HAVASU56 13.20-HAVASU 230.00 ck=1	WAPA L.C.	100 MVA				1.047
BUCK230 230.00-J.HINDS 230.00 ck=1	MEAD 500.00-PERKINS 500.00 ck=1	WAPA L.C.	1430 Amps	1.016			
DAVIS 230.00-MEAD N 230.00 ck=1	MEAD 500.00-PERKINS 500.00 ck=1	WAPA L.C.	1430 Amps	1.008	1.008	1.01	1.008
DEVERS 230.00-OAK_VLLY 230.00 ck=1	MEAD 500.00-PERKINS 500.00 ck=1	WAPA L.C.	1430 Amps	1.005	1.006	1.007	
DEVERS 230.00-VSTA 230.00 ck=2	MEAD 500.00-PERKINS 500.00 ck=1	WAPA L.C.	1430 Amps	1.006	1.007	1.008	
DEVERS 500.00-DEVERS 230.00 ck=1	MEAD 500.00-PERKINS 500.00 ck=1	WAPA L.C.	1430 Amps	1.006	1.01	1.01	1.005
DEVERS 500.00-DEVERS 230.00 ck=2	MEAD 500.00-PERKINS 500.00 ck=1	WAPA L.C.	1430 Amps	1.006	1.01	1.01	1.005
DEVERS 500.00-VALLEYSC 500.00 ck=1	MEAD 500.00-PERKINS 500.00 ck=1	WAPA L.C.	1430 Amps	1.186	1.192	1.189	1.161
H ALLEN 500.00-MEAD 500.00 ck=1	MEAD 500.00-PERKINS 500.00 ck=1	WAPA L.C.	1430 Amps	1.032	1.034	1.034	1.032
LIBERTY 345.00-LIBTYPHS 230.00 ck=1	MEAD 500.00-PERKINS 500.00 ck=1	WAPA L.C.	1430 Amps	1.069	1.07	1.071	1.069
LIBERTY 345.00-PEACOCK 345.00 ck=1	MEAD 500.00-PERKINS 500.00 ck=1	WAPA L.C.	1430 Amps	1.069	1.07	1.071	1.069
LIBTYPHS 230.00-LIBERTY 230.00 ck=1	MEAD 500.00-PERKINS 500.00 ck=1	WAPA L.C.	1430 Amps	1.069	1.07	1.071	1.069
MEAD 345.00-MEAD N 230.00 ck=1	MEAD 500.00-PERKINS 500.00 ck=1	WAPA L.C.	1430 Amps	1.061	1.063	1.064	1.062
MEAD 500.00-PERKINS 500.00 ck=1	LIBERTY 345.00-PEACOCK 345.00 ck=1	WAPA L.C.	850 Amps	1.07	1.072	1.072	1.072
MIDPOINX 500.00-DEVERS 500.00 ck=1	LIBERTY 345.00-PEACOCK 345.00 ck=1	WAPA L.C.	850 Amps	1.105	1.152		1.158
MIDPOINX 500.00-DEVERS 500.00 ck=1	MEAD 500.00-PERKINS 500.00 ck=1	WAPA L.C.	1430 Amps	1.389	1.471		1.5
MOENKOPI 500.00-ELDORDO 500.00 ck=1	MEAD 500.00-PERKINS 500.00 ck=1	WAPA L.C.	1430 Amps	1.176	1.183	1.179	1.17
PALOVRDE 500.00-MIDPOINX 500.00 ck=1	HAVASU12 13.20-HAVASU 230.00 ck=1	WAPA L.C.	100 MVA	1.071	1.077	1.078	1.074
PALOVRDE 500.00-MIDPOINX 500.00 ck=1	HAVASU34 13.20-HAVASU 230.00 ck=1	WAPA L.C.	100 MVA	1.071	1.077	1.078	1.074
PALOVRDE 500.00-MIDPOINX 500.00 ck=1	HAVASU56 13.20-HAVASU 230.00 ck=1	WAPA L.C.	100 MVA	1.071	1.077	1.078	1.074
PALOVRDE 500.00-MIDPOINX 500.00 ck=1	LIBERTY 345.00-PEACOCK 345.00 ck=1	WAPA L.C.	850 Amps	1.139	1.125	1.142	1.16
PALOVRDE 500.00-MIDPOINX 500.00 ck=1	MEAD 500.00-PERKINS 500.00 ck=1	WAPA L.C.	1430 Amps	1.427	1.405	1.447	1.5
PALOVRDE 500.00-MIDPOINX 500.00 ck=1	MIDPXPST 230.00-BUCKPST2 230.00 ck=1	WAPA L.C.	600 MVA		1.081		
PARKER 230.00-GENE 230.00 ck=1	MEAD 500.00-PERKINS 500.00 ck=1	WAPA L.C.	1430 Amps			1.007	1.006

Table 1
Summary Case Comparison's
Transmission Lines and Transformers Overloads
For System Configurations w/o PVD2 "Case 1"

Contingency	Monitored Element	Area	Rating	1_a	1_b	1_c	1_d
PARKER 230.00-HAVASU 230.00 ck=1	MEAD 500.00-PERKINS 500.00 ck=1	WAPA L.C.	1430 Amps	1.008	1.009	1.009	1.005
PEACOCK 345.00-MEAD 345.00 ck=1	MEAD 500.00-PERKINS 500.00 ck=1	WAPA L.C.	1430 Amps	1.061	1.063	1.064	1.061
SERRANO 500.00-VALLEYSC 500.00 ck=1	MEAD 500.00-PERKINS 500.00 ck=1	WAPA L.C.	1430 Amps	1.087	1.092	1.09	1.062
SIGURDPS 230.00-GLENCANY 230.00 ck=1	MEAD 500.00-PERKINS 500.00 ck=1	WAPA L.C.	1430 Amps	1.006	1.007	1.007	1.004
VSTA 230.00-DEVERS 230.00 ck=1	MEAD 500.00-PERKINS 500.00 ck=1	WAPA L.C.	1430 Amps	1.006	1.007	1.007	

Table 1
Summary Case Comparison's
Transmission Lines and Transformers Overloads
For System Configurations w/o PVD2 "Case 1"

Contingency	Monitored Element	Area	Rating	1_a	1_b	1_c	1_d
ALIS	MIDPOINX 500.00-DEVERS 500.00 ck=1	SOCALIF	2700 Amps	1.013	1.112		1.073
ALIS	MNTV-CT1 18.00-MNTVIEW 230.00 ck=1	SOCALIF	123 MVA	1.08	1.079	1.079	1.124
ALIS	MNTV-CT2 18.00-MNTVIEW 230.00 ck=1	SOCALIF	123 MVA	1.08	1.079	1.079	1.124
ALIS	MNTV-CT3 18.00-MNTVIEW 230.00 ck=1	SOCALIF	123 MVA	1.08	1.079	1.079	1.124
ALIS	MNTV-CT4 18.00-MNTVIEW 230.00 ck=1	SOCALIF	123 MVA	1.08	1.079	1.079	1.124
ALIS	SEARLES 34.50-KERRMGEE 13.80 ck=1	SOCALIF	28 MVA				1.021
ALIS	SEARLES 115.00-SEARLES 34.50 ck=1	SOCALIF	28 MVA	1.031	1.031	1.031	1.122
BEP2500 500.00-BLY2CT1 16.00 ck=1	MIDPOINX 500.00-DEVERS 500.00 ck=1	SOCALIF	2700 Amps	1.034	1.132		
BEP2500 500.00-BLY2CT2 16.00 ck=1	MIDPOINX 500.00-DEVERS 500.00 ck=1	SOCALIF	2700 Amps	1.034	1.132		
BEP2500 500.00-BLY2ST1 16.00 ck=1	MIDPOINX 500.00-DEVERS 500.00 ck=1	SOCALIF	2700 Amps	1.033	1.132		
BEP2500 500.00-BLY500 500.00 ck=1	MIDPOINX 500.00-DEVERS 500.00 ck=1	SOCALIF	2700 Amps	1.075	1.173	1.041	
BIG CRK1 230.00-RECTOR 230.00 ck=1	BIG CRK3 230.00-RECTOR 230.00 ck=1	SOCALIF	886 Amps				1.036
BIG CRK3 230.00-RECTOR 230.00 ck=1	BIG CRK1 230.00-RECTOR 230.00 ck=1	SOCALIF	826 Amps				1.044
BLY500 500.00-BUCKBLVD 161.00 ck=1	MIDPOINX 500.00-DEVERS 500.00 ck=1	SOCALIF	2700 Amps	1.023		1.015	
BLY500 500.00-DEVERS 500.00 ck=1	J.HINDS 230.00-MIRAGE 230.00 ck=1	SOCALIF	896 Amps	1.077			
BLY500 500.00-DEVERS 500.00 ck=1	MIDPOINX 500.00-DEVERS 500.00 ck=1	SOCALIF	2700 Amps	1.133	1.22		
BLY500 500.00-DEVERS 500.00 ck=1	MNTV-CT1 18.00-MNTVIEW 230.00 ck=1	SOCALIF	123 MVA	1.095	1.095		
BLY500 500.00-DEVERS 500.00 ck=1	MNTV-CT2 18.00-MNTVIEW 230.00 ck=1	SOCALIF	123 MVA	1.095	1.095		
BLY500 500.00-DEVERS 500.00 ck=1	MNTV-CT3 18.00-MNTVIEW 230.00 ck=1	SOCALIF	123 MVA	1.095	1.095		
BLY500 500.00-DEVERS 500.00 ck=1	MNTV-CT4 18.00-MNTVIEW 230.00 ck=1	SOCALIF	123 MVA	1.095	1.095		
BLYTHE 161.00-BLYTHESC 161.00 ck=1	MIDPOINX 500.00-DEVERS 500.00 ck=1	SOCALIF	2700 Amps				1.084
BUCK230 230.00-BUCKPST2 230.00 ck=1	J.HINDS 230.00-MIRAGE 230.00 ck=1	SOCALIF	896 Amps	1.096			
BUCK230 230.00-J.HINDS 230.00 ck=1	MIDPOINX 500.00-DEVERS 500.00 ck=1	SOCALIF	2700 Amps	1.092			
CAL ELEC 115.00-TAP901 115.00 ck=1	CAL ELEC 115.00-SHANDIN 115.00 ck=1	SOCALIF	830 Amps				1.015
CONTROL 115.00-INYOKERN 115.00 ck=1	INYO 115.00-INYO PS 115.00 ck=1	SOCALIF	56 MVA	1.03	1.031	1.029	1.056
CONTROL 115.00-INYOKERN 115.00 ck=2	INYO 115.00-INYO PS 115.00 ck=1	SOCALIF	56 MVA	1.03	1.031	1.029	1.056
DEVERS 230.00-OAK_VLLY 230.00 ck=1	SANBRDNO 230.00-DEVERS 230.00 ck=1	SOCALIF	796 Amps	1.056	1.038	1.038	
DEVERS 500.00-DEVERS 230.00 ck=1	devers2i 13.80-DEVERS 230.00 ck=2	SOCALIF	1120 MVA		1.054		
DEVERS 500.00-DEVERS 230.00 ck=1	J.HINDS 230.00-MIRAGE 230.00 ck=1	SOCALIF	896 Amps	1.004			
DEVERS 500.00-DEVERS 230.00 ck=2	devers i 13.80-DEVERS 230.00 ck=1	SOCALIF	1120 MVA		1.054		
DEVERS 500.00-DEVERS 230.00 ck=2	J.HINDS 230.00-MIRAGE 230.00 ck=1	SOCALIF	896 Amps	1.004			
DEVERS 500.00-VALLEYSC 500.00 ck=1	DEVERS 230.00-OAK_VLLY 230.00 ck=1	SOCALIF	1150 Amps	1.204	1.201	1.194	1.036
DEVERS 500.00-VALLEYSC 500.00 ck=1	DEVERS 230.00-VSTA 230.00 ck=2	SOCALIF	1240 Amps	1.158	1.154	1.148	1
DEVERS 500.00-VALLEYSC 500.00 ck=1	devers i 13.80-DEVERS 230.00 ck=1	SOCALIF	1120 MVA		1		
DEVERS 500.00-VALLEYSC 500.00 ck=1	devers2i 13.80-DEVERS 230.00 ck=2	SOCALIF	1120 MVA		1		

Table 1
Summary Case Comparison's
Transmission Lines and Transformers Overloads
For System Configurations w/o PVD2 "Case 1"

Contingency	Monitored Element	Area	Rating	1_a	1_b	1_c	1_d
DEVERS 500.00-VALLEYSC 500.00 ck=1	MNTV-CT1 18.00-MNTVIEW 230.00 ck=1	SOCALIF	123 MVA	1.18	1.179	1.177	1.187
DEVERS 500.00-VALLEYSC 500.00 ck=1	MNTV-CT2 18.00-MNTVIEW 230.00 ck=1	SOCALIF	123 MVA	1.18	1.179	1.177	1.187
DEVERS 500.00-VALLEYSC 500.00 ck=1	MNTV-CT3 18.00-MNTVIEW 230.00 ck=1	SOCALIF	123 MVA	1.18	1.179	1.177	1.187
DEVERS 500.00-VALLEYSC 500.00 ck=1	MNTV-CT4 18.00-MNTVIEW 230.00 ck=1	SOCALIF	123 MVA	1.18	1.179	1.177	1.187
DEVERS 500.00-VALLEYSC 500.00 ck=1	SANBRDNO 230.00-DEVERS 230.00 ck=1	SOCALIF	796 Amps	1.475	1.471	1.462	1.249
DEVERS 500.00-VALLEYSC 500.00 ck=1	VSTA 230.00-DEVERS 230.00 ck=1	SOCALIF	1150 Amps	1.235	1.231	1.225	1.067
EAGLEMTN 230.00-IRON MTN 230.00 ck=1	MIDPOINX 500.00-DEVERS 500.00 ck=1	SOCALIF	2700 Amps		1.124		
EAGLROCK 230.00-EAGLROCK 66.00 ck=3	EAGLROCK 230.00-EAGLROCK 66.00 ck=4	SOCALIF	129 MVA	1.039	1.039	1.039	1.039
EAGLROCK 230.00-EAGLROCK 66.00 ck=4	EAGLROCK 230.00-EAGLROCK 66.00 ck=3	SOCALIF	130 MVA	1.032	1.032	1.032	1.032
EL NIDO 230.00-EL NIDO 66.00 ck=1	EL NIDO 230.00-EL NIDO 66.00 ck=3	SOCALIF	280 MVA	1.424	1.424	1.424	1.424
EL NIDO 230.00-EL NIDO 66.00 ck=3	EL NIDO 230.00-EL NIDO 66.00 ck=1	SOCALIF	280 MVA	1.426	1.426	1.426	1.425
ELDORDO 500.00-LUGO 500.00 ck=1	MIDPOINX 500.00-DEVERS 500.00 ck=1	SOCALIF	2700 Amps	1.068	1.166	1.033	1.13
ELDORDO 500.00-LUGO 500.00 ck=1	MNTV-CT1 18.00-MNTVIEW 230.00 ck=1	SOCALIF	123 MVA	1.104	1.103	1.102	1.146
ELDORDO 500.00-LUGO 500.00 ck=1	MNTV-CT2 18.00-MNTVIEW 230.00 ck=1	SOCALIF	123 MVA	1.104	1.103	1.102	1.146
ELDORDO 500.00-LUGO 500.00 ck=1	MNTV-CT3 18.00-MNTVIEW 230.00 ck=1	SOCALIF	123 MVA	1.104	1.103	1.102	1.146
ELDORDO 500.00-LUGO 500.00 ck=1	MNTV-CT4 18.00-MNTVIEW 230.00 ck=1	SOCALIF	123 MVA	1.104	1.103	1.102	1.146
INDIGO 115.00-TAP817 115.00 ck=1	MIDPOINX 500.00-DEVERS 500.00 ck=1	SOCALIF	2700 Amps	1.026	1.125		1.087
INYO 230.00-COTTONWD 230.00 ck=1	INYO 115.00-INYO PS 115.00 ck=1	SOCALIF	56 MVA				1.553
INYO 230.00-COTTONWD 230.00 ck=1	SEARLES 115.00-SEARLES 34.50 ck=1	SOCALIF	28 MVA				1.175
INYOKERN 115.00-KRAMER 115.00 ck=1	INYO 115.00-INYO PS 115.00 ck=1	SOCALIF	56 MVA	1.04	1.04	1.039	1.064
INYOKERN 115.00-KRAMER 115.00 ck=1	SEARLES 115.00-SEARLES 34.50 ck=1	SOCALIF	28 MVA	1.045	1.045	1.045	1.137
IRON MTN 230.00-CAMINO 230.00 ck=1	MIDPOINX 500.00-DEVERS 500.00 ck=1	SOCALIF	2700 Amps		1.124		
J.HINDS 230.00-EAGLEMTN 230.00 ck=1	MIDPOINX 500.00-DEVERS 500.00 ck=1	SOCALIF	2700 Amps		1.127		1.102
J.HINDS 230.00-MIRAGE 230.00 ck=1	MIDPOINX 500.00-DEVERS 500.00 ck=1	SOCALIF	2700 Amps	1.081	1.127		1.102
KRAMER 230.00-LUGO 230.00 ck=1	INYO 115.00-INYO PS 115.00 ck=1	SOCALIF	56 MVA	1.011	1.011	1.01	1.027
KRAMER 230.00-LUGO 230.00 ck=2	INYO 115.00-INYO PS 115.00 ck=1	SOCALIF	56 MVA	1.011	1.011	1.01	1.027
LCIENEGA 230.00-LCIENEGA 66.00 ck=3	LCIENEGA 230.00-LCIENEGA 66.00 ck=4	SOCALIF	288 MVA	1.071	1.071	1.071	1.071
LCIENEGA 230.00-LCIENEGA 66.00 ck=4	LCIENEGA 230.00-LCIENEGA 66.00 ck=3	SOCALIF	280 MVA	1.101	1.101	1.101	1.101
LIBERTY 345.00-LIBTYPHS 230.00 ck=1	MIDPOINX 500.00-DEVERS 500.00 ck=1	SOCALIF	2700 Amps	1.041	1.141	1.008	1.102
LIBERTY 345.00-PEACOCK 345.00 ck=1	MIDPOINX 500.00-DEVERS 500.00 ck=1	SOCALIF	2700 Amps	1.041	1.141	1.009	1.102
LIBTYPHS 230.00-LIBERTY 230.00 ck=1	MIDPOINX 500.00-DEVERS 500.00 ck=1	SOCALIF	2700 Amps	1.041	1.141	1.008	1.102
LUGO 500.00-MIRALOMA 500.00 ck=1	MIDPOINX 500.00-DEVERS 500.00 ck=1	SOCALIF	2700 Amps	1.029	1.127		1.09
LUGO 500.00-MIRALOMA 500.00 ck=2	MIDPOINX 500.00-DEVERS 500.00 ck=1	SOCALIF	2700 Amps	1.031	1.129		1.092
LUGO 500.00-MIRALOMA 500.00 ck=3	MIDPOINX 500.00-DEVERS 500.00 ck=1	SOCALIF	2700 Amps	1.031	1.129		1.092
LUGO 500.00-MOHAVE 500.00 ck=1	MIDPOINX 500.00-DEVERS 500.00 ck=1	SOCALIF	2700 Amps	1.069	1.167	1.034	1.131

Table 1
Summary Case Comparison's
Transmission Lines and Transformers Overloads
For System Configurations w/o PVD2 "Case 1"

Contingency	Monitored Element	Area	Rating	1_a	1_b	1_c	1_d
LUGO 500.00-MOHAVE 500.00 ck=1	MNTV-CT1 18.00-MNTVIEW 230.00 ck=1	SOCALIF	123 MVA	1.104	1.103	1.102	1.146
LUGO 500.00-MOHAVE 500.00 ck=1	MNTV-CT2 18.00-MNTVIEW 230.00 ck=1	SOCALIF	123 MVA	1.104	1.103	1.102	1.146
LUGO 500.00-MOHAVE 500.00 ck=1	MNTV-CT3 18.00-MNTVIEW 230.00 ck=1	SOCALIF	123 MVA	1.104	1.103	1.102	1.146
LUGO 500.00-MOHAVE 500.00 ck=1	MNTV-CT4 18.00-MNTVIEW 230.00 ck=1	SOCALIF	123 MVA	1.104	1.103	1.102	1.146
LUGO 500.00-VICTORVL 500.00 ck=1	ELDORDO 500.00-LUGO 500.00 ck=1	SOCALIF	1600 Amps	1.031	1.027	1.033	1.035
LUGO 500.00-VICTORVL 500.00 ck=1	LUGO 500.00-MOHAVE 500.00 ck=1	SOCALIF	1600 Amps	1.044	1.04	1.046	1.047
LUGO 500.00-VICTORVL 500.00 ck=1	MIDPOINX 500.00-DEVERS 500.00 ck=1	SOCALIF	2700 Amps	1.085	1.182	1.049	1.148
LUGO 500.00-VICTORVL 500.00 ck=1	MNTV-CT1 18.00-MNTVIEW 230.00 ck=1	SOCALIF	123 MVA	1.093	1.092	1.091	1.136
LUGO 500.00-VICTORVL 500.00 ck=1	MNTV-CT2 18.00-MNTVIEW 230.00 ck=1	SOCALIF	123 MVA	1.093	1.092	1.091	1.136
LUGO 500.00-VICTORVL 500.00 ck=1	MNTV-CT3 18.00-MNTVIEW 230.00 ck=1	SOCALIF	123 MVA	1.093	1.092	1.091	1.136
LUGO 500.00-VICTORVL 500.00 ck=1	MNTV-CT4 18.00-MNTVIEW 230.00 ck=1	SOCALIF	123 MVA	1.093	1.092	1.091	1.136
LUGO 500.00-VINCENT 500.00 ck=1	MNTV-CT1 18.00-MNTVIEW 230.00 ck=1	SOCALIF	123 MVA	1.09	1.089	1.089	
LUGO 500.00-VINCENT 500.00 ck=1	MNTV-CT2 18.00-MNTVIEW 230.00 ck=1	SOCALIF	123 MVA	1.09	1.089	1.089	
LUGO 500.00-VINCENT 500.00 ck=1	MNTV-CT3 18.00-MNTVIEW 230.00 ck=1	SOCALIF	123 MVA	1.09	1.089	1.089	
LUGO 500.00-VINCENT 500.00 ck=1	MNTV-CT4 18.00-MNTVIEW 230.00 ck=1	SOCALIF	123 MVA	1.09	1.089	1.089	
LUGO 500.00-VINCENT 500.00 ck=2	MNTV-CT1 18.00-MNTVIEW 230.00 ck=1	SOCALIF	123 MVA	1.09	1.089	1.089	
LUGO 500.00-VINCENT 500.00 ck=2	MNTV-CT2 18.00-MNTVIEW 230.00 ck=1	SOCALIF	123 MVA	1.09	1.089	1.089	
LUGO 500.00-VINCENT 500.00 ck=2	MNTV-CT3 18.00-MNTVIEW 230.00 ck=1	SOCALIF	123 MVA	1.09	1.089	1.089	
LUGO 500.00-VINCENT 500.00 ck=2	MNTV-CT4 18.00-MNTVIEW 230.00 ck=1	SOCALIF	123 MVA	1.09	1.089	1.089	
MEAD 345.00-MEAD N 230.00 ck=1	MIDPOINX 500.00-DEVERS 500.00 ck=1	SOCALIF	2700 Amps	1.033	1.132		1.094
MEAD 500.00-MARKETPL 500.00 ck=1	MIDPOINX 500.00-DEVERS 500.00 ck=1	SOCALIF	2700 Amps	1.066	1.164	1.031	1.128
MEAD 500.00-PERKINS 500.00 ck=1	MIDPOINX 500.00-DEVERS 500.00 ck=1	SOCALIF	2700 Amps	1.131	1.235	1.103	1.198
MEAD 500.00-PERKINS 500.00 ck=1	MNTV-CT1 18.00-MNTVIEW 230.00 ck=1	SOCALIF	123 MVA	1.094	1.093	1.092	1.137
MEAD 500.00-PERKINS 500.00 ck=1	MNTV-CT2 18.00-MNTVIEW 230.00 ck=1	SOCALIF	123 MVA	1.094	1.093	1.092	1.137
MEAD 500.00-PERKINS 500.00 ck=1	MNTV-CT3 18.00-MNTVIEW 230.00 ck=1	SOCALIF	123 MVA	1.094	1.093	1.092	1.137
MEAD 500.00-PERKINS 500.00 ck=1	MNTV-CT4 18.00-MNTVIEW 230.00 ck=1	SOCALIF	123 MVA	1.094	1.093	1.092	1.137
MIDPOINX 500.00-DEVERS 500.00 ck=1	BLYTHESC 161.00-EAGLEMTN 161.00 ck=1	SOCALIF	605 Amps				1.019
MIDPOINX 500.00-DEVERS 500.00 ck=1	ELDORDO 500.00-LUGO 500.00 ck=1	SOCALIF	1600 Amps		1.021		1.05
MIDPOINX 500.00-DEVERS 500.00 ck=1	J.HINDS 230.00-EAGLEMTN 230.00 ck=1	SOCALIF	900 Amps				1.04
MIDPOINX 500.00-DEVERS 500.00 ck=1	J.HINDS 230.00-MIRAGE 230.00 ck=1	SOCALIF	896 Amps	1.735			1.042
MIDPOINX 500.00-DEVERS 500.00 ck=1	LUGO 500.00-MOHAVE 500.00 ck=1	SOCALIF	1600 Amps	1.001	1.033		1.062
MIDPOINX 500.00-DEVERS 500.00 ck=1	LUGO 500.00-VICTORVL 500.00 ck=1	SOCALIF	2771 Amps				1.022
MIDPOINX 500.00-DEVERS 500.00 ck=1	MNTV-CT1 18.00-MNTVIEW 230.00 ck=1	SOCALIF	123 MVA				1.139
MIDPOINX 500.00-DEVERS 500.00 ck=1	MNTV-CT2 18.00-MNTVIEW 230.00 ck=1	SOCALIF	123 MVA				1.139
MIDPOINX 500.00-DEVERS 500.00 ck=1	MNTV-CT3 18.00-MNTVIEW 230.00 ck=1	SOCALIF	123 MVA				1.139

Table 1
Summary Case Comparison's
Transmission Lines and Transformers Overloads
For System Configurations w/o PVD2 "Case 1"

Contingency	Monitored Element	Area	Rating	1_a	1_b	1_c	1_d
MIDPOINX 500.00-DEVERS 500.00 ck=1	MNTV-CT4 18.00-MNTVIEW 230.00 ck=1	SOCALIF	123 MVA				1.139
MIDPOINX 500.00-MIDPXPST 230.00 ck=1	J.HINDS 230.00-MIRAGE 230.00 ck=1	SOCALIF	896 Amps	1.096			
MIDPXPST 230.00-BUCKPST2 230.00 ck=1	J.HINDS 230.00-MIRAGE 230.00 ck=1	SOCALIF	896 Amps	1.096			
MNTV-CT1 18.00-MNTVIEW 230.00 ck=1	MNTV-CT2 18.00-MNTVIEW 230.00 ck=1	SOCALIF	123 MVA	1.093	1.091	1.091	1.134
MNTV-CT1 18.00-MNTVIEW 230.00 ck=1	MNTV-CT3 18.00-MNTVIEW 230.00 ck=1	SOCALIF	123 MVA	1.093	1.091	1.091	1.134
MNTV-CT1 18.00-MNTVIEW 230.00 ck=1	MNTV-CT4 18.00-MNTVIEW 230.00 ck=1	SOCALIF	123 MVA	1.093	1.091	1.091	1.134
MNTV-CT2 18.00-MNTVIEW 230.00 ck=1	MNTV-CT1 18.00-MNTVIEW 230.00 ck=1	SOCALIF	123 MVA	1.093	1.091	1.091	1.134
MNTV-CT2 18.00-MNTVIEW 230.00 ck=1	MNTV-CT3 18.00-MNTVIEW 230.00 ck=1	SOCALIF	123 MVA	1.093	1.091	1.091	1.134
MNTV-CT2 18.00-MNTVIEW 230.00 ck=1	MNTV-CT4 18.00-MNTVIEW 230.00 ck=1	SOCALIF	123 MVA	1.093	1.091	1.091	1.134
MNTV-CT3 18.00-MNTVIEW 230.00 ck=1	MNTV-CT1 18.00-MNTVIEW 230.00 ck=1	SOCALIF	123 MVA	1.093	1.091	1.091	1.134
MNTV-CT3 18.00-MNTVIEW 230.00 ck=1	MNTV-CT2 18.00-MNTVIEW 230.00 ck=1	SOCALIF	123 MVA	1.093	1.091	1.091	1.134
MNTV-CT3 18.00-MNTVIEW 230.00 ck=1	MNTV-CT4 18.00-MNTVIEW 230.00 ck=1	SOCALIF	123 MVA	1.093	1.091	1.091	1.134
MNTV-CT4 18.00-MNTVIEW 230.00 ck=1	MNTV-CT1 18.00-MNTVIEW 230.00 ck=1	SOCALIF	123 MVA	1.093	1.091	1.091	1.134
MNTV-CT4 18.00-MNTVIEW 230.00 ck=1	MNTV-CT2 18.00-MNTVIEW 230.00 ck=1	SOCALIF	123 MVA	1.093	1.091	1.091	1.134
MNTV-CT4 18.00-MNTVIEW 230.00 ck=1	MNTV-CT3 18.00-MNTVIEW 230.00 ck=1	SOCALIF	123 MVA	1.093	1.091	1.091	1.134
MNTV-ST1 18.00-MNTVIEW 230.00 ck=1	MNTV-CT1 18.00-MNTVIEW 230.00 ck=1	SOCALIF	123 MVA	1.108	1.106	1.106	1.148
MNTV-ST1 18.00-MNTVIEW 230.00 ck=1	MNTV-CT2 18.00-MNTVIEW 230.00 ck=1	SOCALIF	123 MVA	1.108	1.106	1.106	1.148
MNTV-ST1 18.00-MNTVIEW 230.00 ck=1	MNTV-CT3 18.00-MNTVIEW 230.00 ck=1	SOCALIF	123 MVA	1.108	1.106	1.106	1.148
MNTV-ST1 18.00-MNTVIEW 230.00 ck=1	MNTV-CT4 18.00-MNTVIEW 230.00 ck=1	SOCALIF	123 MVA	1.108	1.106	1.106	1.148
MNTV-ST2 18.00-MNTVIEW 230.00 ck=1	MNTV-CT1 18.00-MNTVIEW 230.00 ck=1	SOCALIF	123 MVA	1.108	1.106	1.106	1.148
MNTV-ST2 18.00-MNTVIEW 230.00 ck=1	MNTV-CT2 18.00-MNTVIEW 230.00 ck=1	SOCALIF	123 MVA	1.108	1.106	1.106	1.148
MNTV-ST2 18.00-MNTVIEW 230.00 ck=1	MNTV-CT3 18.00-MNTVIEW 230.00 ck=1	SOCALIF	123 MVA	1.108	1.106	1.106	1.148
MNTV-ST2 18.00-MNTVIEW 230.00 ck=1	MNTV-CT4 18.00-MNTVIEW 230.00 ck=1	SOCALIF	123 MVA	1.108	1.106	1.106	1.148
MOENKOPI 500.00-ELDORDO 500.00 ck=1	MIDPOINX 500.00-DEVERS 500.00 ck=1	SOCALIF	2700 Amps	1.082	1.185	1.051	1.144
MOENKOPI 500.00-ELDORDO 500.00 ck=1	MNTV-CT1 18.00-MNTVIEW 230.00 ck=1	SOCALIF	123 MVA	1.094	1.093	1.092	1.136
MOENKOPI 500.00-ELDORDO 500.00 ck=1	MNTV-CT2 18.00-MNTVIEW 230.00 ck=1	SOCALIF	123 MVA	1.094	1.093	1.092	1.136
MOENKOPI 500.00-ELDORDO 500.00 ck=1	MNTV-CT3 18.00-MNTVIEW 230.00 ck=1	SOCALIF	123 MVA	1.094	1.093	1.092	1.136
MOENKOPI 500.00-ELDORDO 500.00 ck=1	MNTV-CT4 18.00-MNTVIEW 230.00 ck=1	SOCALIF	123 MVA	1.094	1.093	1.092	1.136
MOHAVE 500.00-ELDORDO 500.00 ck=1	MIDPOINX 500.00-DEVERS 500.00 ck=1	SOCALIF	2700 Amps	1.07	1.168	1.035	1.131
MOHAVE 500.00-ELDORDO 500.00 ck=1	MNTV-CT1 18.00-MNTVIEW 230.00 ck=1	SOCALIF	123 MVA	1.095	1.094	1.094	1.138
MOHAVE 500.00-ELDORDO 500.00 ck=1	MNTV-CT2 18.00-MNTVIEW 230.00 ck=1	SOCALIF	123 MVA	1.095	1.094	1.094	1.138
MOHAVE 500.00-ELDORDO 500.00 ck=1	MNTV-CT3 18.00-MNTVIEW 230.00 ck=1	SOCALIF	123 MVA	1.095	1.094	1.094	1.138
MOHAVE 500.00-ELDORDO 500.00 ck=1	MNTV-CT4 18.00-MNTVIEW 230.00 ck=1	SOCALIF	123 MVA	1.095	1.094	1.094	1.138
OWENSCON 230.00-INYO 230.00 ck=1	INYO 115.00-INYO PS 115.00 ck=1	SOCALIF	56 MVA	1.33	1.331	1.329	1.339
PALOVRDE 500.00-MIDPOINX 500.00 ck=1	BLYTHESC 161.00-EAGLEMTN 161.00 ck=1	SOCALIF	605 Amps				1.021

Table 1
Summary Case Comparison's
Transmission Lines and Transformers Overloads
For System Configurations w/o PVD2 "Case 1"

Contingency	Monitored Element	Area	Rating	1_a	1_b	1_c	1_d
PALOVRDE 500.00-MIDPOINX 500.00 ck=1	ELDORDO 500.00-LUGO 500.00 ck=1	SOCALIF	1600 Amps			1.007	1.047
PALOVRDE 500.00-MIDPOINX 500.00 ck=1	J.HINDS 230.00-EAGLEMTN 230.00 ck=1	SOCALIF	900 Amps				1.044
PALOVRDE 500.00-MIDPOINX 500.00 ck=1	J.HINDS 230.00-MIRAGE 230.00 ck=1	SOCALIF	896 Amps				1.046
PALOVRDE 500.00-MIDPOINX 500.00 ck=1	LUGO 500.00-MOHAVE 500.00 ck=1	SOCALIF	1600 Amps			1.018	1.059
PALOVRDE 500.00-MIDPOINX 500.00 ck=1	LUGO 500.00-VICTORVL 500.00 ck=1	SOCALIF	2771 Amps				1.02
PALOVRDE 500.00-MIDPOINX 500.00 ck=1	MIDPOINX 500.00-MIDPXPST 230.00 ck=1	SOCALIF	650 MVA		1.014		
PARKER 230.00-HAVASU 230.00 ck=1	MIDPOINX 500.00-DEVERS 500.00 ck=1	SOCALIF	2700 Amps	1.034	1.131		1.095
PARKER 230.00-HAVASU 230.00 ck=1	MNTV-CT1 18.00-MNTVIEW 230.00 ck=1	SOCALIF	123 MVA	1.092	1.09	1.09	1.134
PARKER 230.00-HAVASU 230.00 ck=1	MNTV-CT2 18.00-MNTVIEW 230.00 ck=1	SOCALIF	123 MVA	1.092	1.09	1.09	1.134
PARKER 230.00-HAVASU 230.00 ck=1	MNTV-CT3 18.00-MNTVIEW 230.00 ck=1	SOCALIF	123 MVA	1.092	1.09	1.09	1.134
PARKER 230.00-HAVASU 230.00 ck=1	MNTV-CT4 18.00-MNTVIEW 230.00 ck=1	SOCALIF	123 MVA	1.092	1.09	1.09	1.134
PEACOCK 345.00-MEAD 345.00 ck=1	MIDPOINX 500.00-DEVERS 500.00 ck=1	SOCALIF	2700 Amps	1.033	1.132		1.095
S.CLARA 230.00-S.CLARA 66.00 ck=2	S.CLARA 230.00-S.CLARA 66.00 ck=4	SOCALIF	280 MVA	1.083	1.083	1.083	1.064
S.CLARA 230.00-S.CLARA 66.00 ck=4	S.CLARA 230.00-S.CLARA 66.00 ck=2	SOCALIF	291 MVA	1.035	1.035	1.035	1.018
SERRANO 500.00-VALLEYSC 500.00 ck=1	MNTV-CT1 18.00-MNTVIEW 230.00 ck=1	SOCALIF	123 MVA	1.106	1.105	1.104	1.136
SERRANO 500.00-VALLEYSC 500.00 ck=1	MNTV-CT2 18.00-MNTVIEW 230.00 ck=1	SOCALIF	123 MVA	1.106	1.105	1.104	1.136
SERRANO 500.00-VALLEYSC 500.00 ck=1	MNTV-CT3 18.00-MNTVIEW 230.00 ck=1	SOCALIF	123 MVA	1.106	1.105	1.104	1.136
SERRANO 500.00-VALLEYSC 500.00 ck=1	MNTV-CT4 18.00-MNTVIEW 230.00 ck=1	SOCALIF	123 MVA	1.106	1.105	1.104	1.136
SERRANO 500.00-VALLEYSC 500.00 ck=1	SANBRDNO 230.00-DEVERS 230.00 ck=1	SOCALIF	796 Amps	1.128	1.123	1.116	
TAP701 115.00-INYOKERN 115.00 ck=1	INYO 115.00-INYO PS 115.00 ck=1	SOCALIF	56 MVA				1.001

Table 1
Summary Case Comparison's
Transmission Lines and Transformers Overloads
For System Configurations w/o PVD2 "Case 1"

Contingency	Monitored Element	Area	Rating	1_a	1_b	1_c	1_d
DEVERS 500.00-VALLEYSC 500.00 ck=1	HASSYAMP 500.00-N.GILA 500.00 ck=1	SANDIEGO	2200 Amps	1.059	1.08	1.04	
MEAD 500.00-PERKINS 500.00 ck=1	HASSYAMP 500.00-N.GILA 500.00 ck=1	SANDIEGO	2200 Amps	1.016	1.035		
MIDPOINX 500.00-DEVERS 500.00 ck=1	HASSYAMP 500.00-N.GILA 500.00 ck=1	SANDIEGO	2200 Amps	1.263	1.346		1.282
MOENKOPI 500.00-ELDORDO 500.00 ck=1	HASSYAMP 500.00-N.GILA 500.00 ck=1	SANDIEGO	2200 Amps		1.007		
PALOVRDE 500.00-MIDPOINX 500.00 ck=1	HASSYAMP 500.00-N.GILA 500.00 ck=1	SANDIEGO	2200 Amps	1.296	1.297	1.289	1.279
S.ONOFRE 230.00-S.ONOFR2 22.00 ck=1	HASSYAMP 500.00-N.GILA 500.00 ck=1	SANDIEGO	2200 Amps	1.024	1.042	1.003	
S.ONOFRE 230.00-S.ONOFR3 22.00 ck=1	HASSYAMP 500.00-N.GILA 500.00 ck=1	SANDIEGO	2200 Amps	1.034	1.052	1.013	
SERRANO 500.00-VALLEYSC 500.00 ck=1	HASSYAMP 500.00-N.GILA 500.00 ck=1	SANDIEGO	2200 Amps		1.015		

Table 1
Summary Case Comparison's
Transmission Lines and Transformers Overloads
For System Configurations w/o PVD2 "Case 1"

Contingency	Monitored Element	Area	Rating	1_a	1_b	1_c	1_d
MEAD 500.00-PERKINS 500.00 ck=1	NAVAJO 500.00-CRYSTAL 500.00 ck=1	LADWP	1630 Amps	1.049	1.069	1.053	1.029
MIDPOINX 500.00-DEVERS 500.00 ck=1	NAVAJO 500.00-CRYSTAL 500.00 ck=1	LADWP	1630 Amps	1.076	1.145		1.129
MOENKOPI 500.00-ELDORDO 500.00 ck=1	NAVAJO 500.00-CRYSTAL 500.00 ck=1	LADWP	1630 Amps	1.277	1.308	1.281	1.243
PALOVRDE 500.00-MIDPOINX 500.00 ck=1	NAVAJO 500.00-CRYSTAL 500.00 ck=1	LADWP	1630 Amps	1.095	1.1	1.111	1.128

Table 1
Summary Case Comparison's
Transmission Lines and Transformers Overloads
For System Configurations w/o PVD2 "Case 1"

Contingency	Monitored Element	Area	Rating	1_a	1_b	1_c	1_d
BLYTHE 161.00-BLYTHESC 161.00 ck=1	NILAND 161.00-BLYTHE 161.00 ck=1	IID	592 Amps				1.103
BLYTHESC 161.00-EAGLEMTN 161.00 ck=1	NILAND 161.00-BLYTHE 161.00 ck=1	IID	592 Amps				1.04
CEUNIT1 16.00-CESUB 161.00 ck=1	NILAND 161.00-BLYTHE 161.00 ck=1	IID	592 Amps				1.019
DROP3 92.00-DROP3 6.90 ck=1	DROP3 34.50-DROP3 6.90 ck=1	IID	6 MVA	1.407	1.407	1.407	1.407
DROP3 92.00-DROP4 92.00 ck=1	DROP3 34.50-DROP3 6.90 ck=1	IID	6 MVA	1.407	1.407	1.407	1.407
EAGLEMTN 230.00-EAGLEMTN 161.00 ck=1	NILAND 161.00-BLYTHE 161.00 ck=1	IID	592 Amps				1.038
MIDPOINX 500.00-DEVERS 500.00 ck=1	AV58TP1 161.00-BANISTER 161.00 ck=1	IID	592 Amps				1.077
MIDPOINX 500.00-DEVERS 500.00 ck=1	HEBERSCE 92.00-HEBERSCE 13.80 ck=1	IID	50 MVA				1.038
MIDPOINX 500.00-DEVERS 500.00 ck=1	NILAND 161.00-BLYTHE 161.00 ck=1	IID	592 Amps				1.108
MIDPOINX 500.00-DEVERS 500.00 ck=1	NILAND 161.00-CVSUB161 161.00 ck=1	IID	592 Amps				1.113
MIDPOINX 500.00-DEVERS 500.00 ck=1	RTAP2 92.00-RTP1 92.00 ck=1	IID	358 Amps				1.069
MIDWAY x 230.00-MIDWAY 92.00 ck=1	MIDWAY x 230.00-MIDWAY 92.00 ck=2	IID	225 MVA	1.32	1.318	1.319	1.32
MIDWAY x 230.00-MIDWAY 92.00 ck=2	MIDWAY x 230.00-MIDWAY 92.00 ck=1	IID	225 MVA	1.32	1.318	1.319	1.32
PALOVRDE 500.00-MIDPOINX 500.00 ck=1	AV58TP1 161.00-BANISTER 161.00 ck=1	IID	592 Amps				1.072
PALOVRDE 500.00-MIDPOINX 500.00 ck=1	HEBERSCE 92.00-HEBERSCE 13.80 ck=1	IID	50 MVA				1.015
PALOVRDE 500.00-MIDPOINX 500.00 ck=1	NILAND 161.00-BLYTHE 161.00 ck=1	IID	592 Amps				1.114
PALOVRDE 500.00-MIDPOINX 500.00 ck=1	NILAND 161.00-CVSUB161 161.00 ck=1	IID	592 Amps				1.111
PALOVRDE 500.00-MIDPOINX 500.00 ck=1	RTAP2 92.00-RTP1 92.00 ck=1	IID	358 Amps				1.064

Table 1
Summary Case Comparison's
Transmission Lines and Transformers Overloads
For System Configurations w/o PVD2 "Case 1"

Contingency	Monitored Element	Area	Rating	1_a	1_b	1_c	1_d
ALIS	DBG 230.00-DBG-ST1 18.00 ck=1	ARIZONA	250 MVA	1.015	1.015	1.015	1.015
ALIS	GILARIVR 500.00-GIL-ST4 18.00 ck=1	ARIZONA	210 MVA	1.205	1.205	1.205	1.205
ALIS	PALOVRDE 500.00-MIDPOINX 500.00 ck=1	ARIZONA	2500 Amps	1.027		1.057	1.158
ALIS	PERKINS 500.00-PERK PS1 500.00 ck=1	ARIZONA	650 MVA	1.007	1.008	1.009	1.006
ALIS	PERKINS 500.00-PERK PS2 500.00 ck=1	ARIZONA	650 MVA	1.007	1.008	1.009	1.006
ALIS	SAG.EAST 115.00-SAG. CT3 13.80 ck=1	ARIZONA	70 MVA	1.002	1.002	1.002	1.002
BEP2500 500.00-BLY2CT1 16.00 ck=1	PALOVRDE 500.00-MIDPOINX 500.00 ck=1	ARIZONA	2500 Amps	1.05		1.079	
BEP2500 500.00-BLY2CT2 16.00 ck=1	PALOVRDE 500.00-MIDPOINX 500.00 ck=1	ARIZONA	2500 Amps	1.05		1.079	
BEP2500 500.00-BLY2ST1 16.00 ck=1	PALOVRDE 500.00-MIDPOINX 500.00 ck=1	ARIZONA	2500 Amps	1.049		1.079	
BEP2500 500.00-BLY500 500.00 ck=1	PALOVRDE 500.00-MIDPOINX 500.00 ck=1	ARIZONA	2500 Amps	1.096	1.04	1.124	
BLY500 500.00-BUCKBLVD 161.00 ck=1	PALOVRDE 500.00-MIDPOINX 500.00 ck=1	ARIZONA	2500 Amps			1.096	
BLY500 500.00-DEVERS 500.00 ck=1	PALOVRDE 500.00-MIDPOINX 500.00 ck=1	ARIZONA	2500 Amps	1.097	1.043		
BLYTHE 161.00-BLYTHESC 161.00 ck=1	PALOVRDE 500.00-MIDPOINX 500.00 ck=1	ARIZONA	2500 Amps				1.171
BUCK230 230.00-BUCKCT1 16.00 ck=1	PALOVRDE 500.00-MIDPOINX 500.00 ck=1	ARIZONA	2500 Amps	1.055	1.004		
BUCK230 230.00-BUCKCT2 16.00 ck=1	PALOVRDE 500.00-MIDPOINX 500.00 ck=1	ARIZONA	2500 Amps	1.055	1.004		
BUCK230 230.00-BUCKPS1 161.00 ck=1	PALOVRDE 500.00-MIDPOINX 500.00 ck=1	ARIZONA	2500 Amps	1.048		1.069	
BUCK230 230.00-BUCKPST2 230.00 ck=1	PALOVRDE 500.00-MIDPOINX 500.00 ck=1	ARIZONA	2500 Amps	1.053			
BUCK230 230.00-J.HINDS 230.00 ck=1	PERKINS 500.00-PERK PS1 500.00 ck=1	ARIZONA	650 MVA	1.028			
BUCK230 230.00-J.HINDS 230.00 ck=1	PERKINS 500.00-PERK PS2 500.00 ck=1	ARIZONA	650 MVA	1.028			
BUCKBLVD 161.00-BUCKPS1 161.00 ck=1	PALOVRDE 500.00-MIDPOINX 500.00 ck=1	ARIZONA	2500 Amps	1.048		1.069	
BUCKBLVD 161.00-BUCKST1 16.00 ck=1	PALOVRDE 500.00-MIDPOINX 500.00 ck=1	ARIZONA	2500 Amps	1.038			
DAVIS 230.00-MEAD N 230.00 ck=1	PERKINS 500.00-PERK PS1 500.00 ck=1	ARIZONA	650 MVA	1.02	1.021	1.022	1.02
DAVIS 230.00-MEAD N 230.00 ck=1	PERKINS 500.00-PERK PS2 500.00 ck=1	ARIZONA	650 MVA	1.02	1.021	1.022	1.02
DEVERS 230.00-OAK_VLLY 230.00 ck=1	PERKINS 500.00-PERK PS1 500.00 ck=1	ARIZONA	650 MVA	1.018	1.018	1.019	
DEVERS 230.00-OAK_VLLY 230.00 ck=1	PERKINS 500.00-PERK PS2 500.00 ck=1	ARIZONA	650 MVA	1.018	1.018	1.019	
DEVERS 230.00-VSTA 230.00 ck=2	PERKINS 500.00-PERK PS1 500.00 ck=1	ARIZONA	650 MVA	1.019	1.019	1.02	
DEVERS 230.00-VSTA 230.00 ck=2	PERKINS 500.00-PERK PS2 500.00 ck=1	ARIZONA	650 MVA	1.019	1.019	1.02	
DEVERS 500.00-DEVERS 230.00 ck=1	PERKINS 500.00-PERK PS1 500.00 ck=1	ARIZONA	650 MVA	1.018	1.022	1.022	1.017
DEVERS 500.00-DEVERS 230.00 ck=1	PERKINS 500.00-PERK PS2 500.00 ck=1	ARIZONA	650 MVA	1.018	1.022	1.022	1.017
DEVERS 500.00-DEVERS 230.00 ck=2	PERKINS 500.00-PERK PS1 500.00 ck=1	ARIZONA	650 MVA	1.018	1.022	1.022	1.017
DEVERS 500.00-DEVERS 230.00 ck=2	PERKINS 500.00-PERK PS2 500.00 ck=1	ARIZONA	650 MVA	1.018	1.022	1.022	1.017
DEVERS 500.00-VALLEYSC 500.00 ck=1	PERKINS 500.00-PERK PS1 500.00 ck=1	ARIZONA	650 MVA	1.192	1.198	1.195	1.169
DEVERS 500.00-VALLEYSC 500.00 ck=1	PERKINS 500.00-PERK PS2 500.00 ck=1	ARIZONA	650 MVA	1.192	1.198	1.195	1.169
EAGLEMTN 230.00-IRON MTN 230.00 ck=1	PALOVRDE 500.00-MIDPOINX 500.00 ck=1	ARIZONA	2500 Amps			1.068	
ELDORDO 500.00-LUGO 500.00 ck=1	PALOVRDE 500.00-MIDPOINX 500.00 ck=1	ARIZONA	2500 Amps	1.085	1.03	1.116	1.22

Table 1
Summary Case Comparison's
Transmission Lines and Transformers Overloads
For System Configurations w/o PVD2 "Case 1"

Contingency	Monitored Element	Area	Rating	1_a	1_b	1_c	1_d
H ALLEN 500.00-MEAD 500.00 ck=1	PERKINS 500.00-PERK PS1 500.00 ck=1	ARIZONA	650 MVA	1.044	1.045	1.046	1.043
H ALLEN 500.00-MEAD 500.00 ck=1	PERKINS 500.00-PERK PS2 500.00 ck=1	ARIZONA	650 MVA	1.044	1.045	1.046	1.043
INDIGO 115.00-TAP817 115.00 ck=1	PALOVRDE 500.00-MIDPOINX 500.00 ck=1	ARIZONA	2500 Amps	1.041		1.071	1.174
IRON MTN 230.00-CAMINO 230.00 ck=1	PALOVRDE 500.00-MIDPOINX 500.00 ck=1	ARIZONA	2500 Amps			1.068	
J.HINDS 230.00-EAGLEMTN 230.00 ck=1	PALOVRDE 500.00-MIDPOINX 500.00 ck=1	ARIZONA	2500 Amps			1.076	1.19
J.HINDS 230.00-MIRAGE 230.00 ck=1	PALOVRDE 500.00-MIDPOINX 500.00 ck=1	ARIZONA	2500 Amps			1.076	1.19
LEATHERS 92.00-MIDWAY 92.00 ck=1	PALOVRDE 500.00-MIDPOINX 500.00 ck=1	ARIZONA	2500 Amps	1.038		1.067	1.168
LIBERTY 345.00-LIBTYPHS 230.00 ck=1	PALOVRDE 500.00-MIDPOINX 500.00 ck=1	ARIZONA	2500 Amps	1.061	1.004	1.089	1.19
LIBERTY 345.00-LIBTYPHS 230.00 ck=1	PERKINS 500.00-PERK PS1 500.00 ck=1	ARIZONA	650 MVA	1.082	1.084	1.084	1.082
LIBERTY 345.00-LIBTYPHS 230.00 ck=1	PERKINS 500.00-PERK PS2 500.00 ck=1	ARIZONA	650 MVA	1.082	1.084	1.084	1.082
LIBERTY 345.00-PEACOCK 345.00 ck=1	PALOVRDE 500.00-MIDPOINX 500.00 ck=1	ARIZONA	2500 Amps	1.061	1.005	1.089	1.19
LIBERTY 345.00-PEACOCK 345.00 ck=1	PERKINS 500.00-PERK PS1 500.00 ck=1	ARIZONA	650 MVA	1.081	1.083	1.083	1.082
LIBERTY 345.00-PEACOCK 345.00 ck=1	PERKINS 500.00-PERK PS2 500.00 ck=1	ARIZONA	650 MVA	1.081	1.083	1.083	1.082
LIBTYPHS 230.00-LIBERTY 230.00 ck=1	PALOVRDE 500.00-MIDPOINX 500.00 ck=1	ARIZONA	2500 Amps	1.061	1.004	1.089	1.19
LIBTYPHS 230.00-LIBERTY 230.00 ck=1	PERKINS 500.00-PERK PS1 500.00 ck=1	ARIZONA	650 MVA	1.082	1.084	1.084	1.082
LIBTYPHS 230.00-LIBERTY 230.00 ck=1	PERKINS 500.00-PERK PS2 500.00 ck=1	ARIZONA	650 MVA	1.082	1.084	1.084	1.082
LUGO 500.00-MIRALOMA 500.00 ck=1	PALOVRDE 500.00-MIDPOINX 500.00 ck=1	ARIZONA	2500 Amps	1.044		1.074	1.177
LUGO 500.00-MIRALOMA 500.00 ck=2	PALOVRDE 500.00-MIDPOINX 500.00 ck=1	ARIZONA	2500 Amps	1.046		1.076	1.18
LUGO 500.00-MIRALOMA 500.00 ck=3	PALOVRDE 500.00-MIDPOINX 500.00 ck=1	ARIZONA	2500 Amps	1.045		1.075	1.179
LUGO 500.00-MOHAVE 500.00 ck=1	PALOVRDE 500.00-MIDPOINX 500.00 ck=1	ARIZONA	2500 Amps	1.086	1.031	1.117	1.221
LUGO 500.00-VICTORVL 500.00 ck=1	PALOVRDE 500.00-MIDPOINX 500.00 ck=1	ARIZONA	2500 Amps	1.103	1.047	1.133	1.24
MEAD 345.00-MEAD N 230.00 ck=1	PALOVRDE 500.00-MIDPOINX 500.00 ck=1	ARIZONA	2500 Amps	1.049		1.079	1.182
MEAD 345.00-MEAD N 230.00 ck=1	PERKINS 500.00-PERK PS1 500.00 ck=1	ARIZONA	650 MVA	1.074	1.076	1.077	1.075
MEAD 345.00-MEAD N 230.00 ck=1	PERKINS 500.00-PERK PS2 500.00 ck=1	ARIZONA	650 MVA	1.074	1.076	1.077	1.075
MEAD 500.00-MARKETPL 500.00 ck=1	PALOVRDE 500.00-MIDPOINX 500.00 ck=1	ARIZONA	2500 Amps	1.084	1.027	1.114	1.218
MEAD 500.00-PERKINS 500.00 ck=1	LIBTYPHS 230.00-LIBERTY 230.00 ck=1	ARIZONA	500 MVA	1.079	1.081	1.081	1.082
MEAD 500.00-PERKINS 500.00 ck=1	PALOVRDE 500.00-MIDPOINX 500.00 ck=1	ARIZONA	2500 Amps	1.166	1.107	1.191	1.293
MIDPOINX 500.00-DEVERS 500.00 ck=1	LIBTYPHS 230.00-LIBERTY 230.00 ck=1	ARIZONA	500 MVA	1.11	1.153		1.164
MIDPOINX 500.00-DEVERS 500.00 ck=1	MOENKOPI 500.00-ELDORDO 500.00 ck=1	ARIZONA	1900 Amps		1.015		1.004
MIDPOINX 500.00-DEVERS 500.00 ck=1	PERKINPS 500.00-WESTWING 500.00 ck=1	ARIZONA	2000 Amps		1.052		1.072
MIDPOINX 500.00-DEVERS 500.00 ck=1	PERKINS 500.00-PERK PS1 500.00 ck=1	ARIZONA	650 MVA	1.384	1.456		1.484
MIDPOINX 500.00-DEVERS 500.00 ck=1	PERKINS 500.00-PERK PS2 500.00 ck=1	ARIZONA	650 MVA	1.384	1.456		1.484
MIDPOINX 500.00-MIDPXPST 230.00 ck=1	PALOVRDE 500.00-MIDPOINX 500.00 ck=1	ARIZONA	2500 Amps	1.053			
MIDPXPST 230.00-BUCKPST2 230.00 ck=1	PALOVRDE 500.00-MIDPOINX 500.00 ck=1	ARIZONA	2500 Amps	1.053			
MOENKOPI 500.00-ELDORDO 500.00 ck=1	PALOVRDE 500.00-MIDPOINX 500.00 ck=1	ARIZONA	2500 Amps	1.107	1.052	1.135	1.235

Table 1
Summary Case Comparison's
Transmission Lines and Transformers Overloads
For System Configurations w/o PVD2 "Case 1"

Contingency	Monitored Element	Area	Rating	1_a	1_b	1_c	1_d
MOENKOPI 500.00-ELDORDO 500.00 ck=1	PERKINS 500.00-PERK PS1 500.00 ck=1	ARIZONA	650 MVA	1.184	1.191	1.187	1.178
MOENKOPI 500.00-ELDORDO 500.00 ck=1	PERKINS 500.00-PERK PS2 500.00 ck=1	ARIZONA	650 MVA	1.184	1.191	1.187	1.178
MOHAVE 500.00-ELDORDO 500.00 ck=1	PALOVRDE 500.00-MIDPOINX 500.00 ck=1	ARIZONA	2500 Amps	1.087	1.032	1.118	1.222
PALOVRDE 500.00-MIDPOINX 500.00 ck=1	LIBTYPHS 230.00-LIBERTY 230.00 ck=1	ARIZONA	500 MVA	1.142	1.128	1.146	1.165
PALOVRDE 500.00-MIDPOINX 500.00 ck=1	MOENKOPI 500.00-ELDORDO 500.00 ck=1	ARIZONA	1900 Amps				1.001
PALOVRDE 500.00-MIDPOINX 500.00 ck=1	PERKINPS 500.00-WESTWING 500.00 ck=1	ARIZONA	2000 Amps	1.021	1.005	1.035	1.072
PALOVRDE 500.00-MIDPOINX 500.00 ck=1	PERKINS 500.00-PERK PS1 500.00 ck=1	ARIZONA	650 MVA	1.421	1.4	1.438	1.483
PALOVRDE 500.00-MIDPOINX 500.00 ck=1	PERKINS 500.00-PERK PS2 500.00 ck=1	ARIZONA	650 MVA	1.421	1.4	1.438	1.483
PARKER 230.00-GENE 230.00 ck=1	PERKINS 500.00-PERK PS1 500.00 ck=1	ARIZONA	650 MVA			1.02	1.018
PARKER 230.00-GENE 230.00 ck=1	PERKINS 500.00-PERK PS2 500.00 ck=1	ARIZONA	650 MVA			1.02	1.018
PARKER 230.00-HAVASU 230.00 ck=1	PALOVRDE 500.00-MIDPOINX 500.00 ck=1	ARIZONA	2500 Amps	1.043		1.075	1.182
PARKER 230.00-HAVASU 230.00 ck=1	PERKINS 500.00-PERK PS1 500.00 ck=1	ARIZONA	650 MVA	1.019	1.02	1.02	1.017
PARKER 230.00-HAVASU 230.00 ck=1	PERKINS 500.00-PERK PS2 500.00 ck=1	ARIZONA	650 MVA	1.019	1.02	1.02	1.017
PEACOCK 345.00-MEAD 345.00 ck=1	PALOVRDE 500.00-MIDPOINX 500.00 ck=1	ARIZONA	2500 Amps	1.049		1.079	1.182
PEACOCK 345.00-MEAD 345.00 ck=1	PERKINS 500.00-PERK PS1 500.00 ck=1	ARIZONA	650 MVA	1.074	1.075	1.076	1.074
PEACOCK 345.00-MEAD 345.00 ck=1	PERKINS 500.00-PERK PS2 500.00 ck=1	ARIZONA	650 MVA	1.074	1.075	1.076	1.074
SERRANO 500.00-VALLEYSC 500.00 ck=1	PERKINS 500.00-PERK PS1 500.00 ck=1	ARIZONA	650 MVA	1.098	1.103	1.1	1.073
SERRANO 500.00-VALLEYSC 500.00 ck=1	PERKINS 500.00-PERK PS2 500.00 ck=1	ARIZONA	650 MVA	1.098	1.103	1.1	1.073
SIGURDPS 230.00-GLENCANY 230.00 ck=1	PERKINS 500.00-PERK PS1 500.00 ck=1	ARIZONA	650 MVA	1.018	1.019	1.019	1.017
SIGURDPS 230.00-GLENCANY 230.00 ck=1	PERKINS 500.00-PERK PS2 500.00 ck=1	ARIZONA	650 MVA	1.018	1.019	1.019	1.017
VSTA 230.00-DEVERS 230.00 ck=1	PERKINS 500.00-PERK PS1 500.00 ck=1	ARIZONA	650 MVA	1.018	1.019	1.02	
VSTA 230.00-DEVERS 230.00 ck=1	PERKINS 500.00-PERK PS2 500.00 ck=1	ARIZONA	650 MVA	1.018	1.019	1.02	

Power Flow Plots Case 2

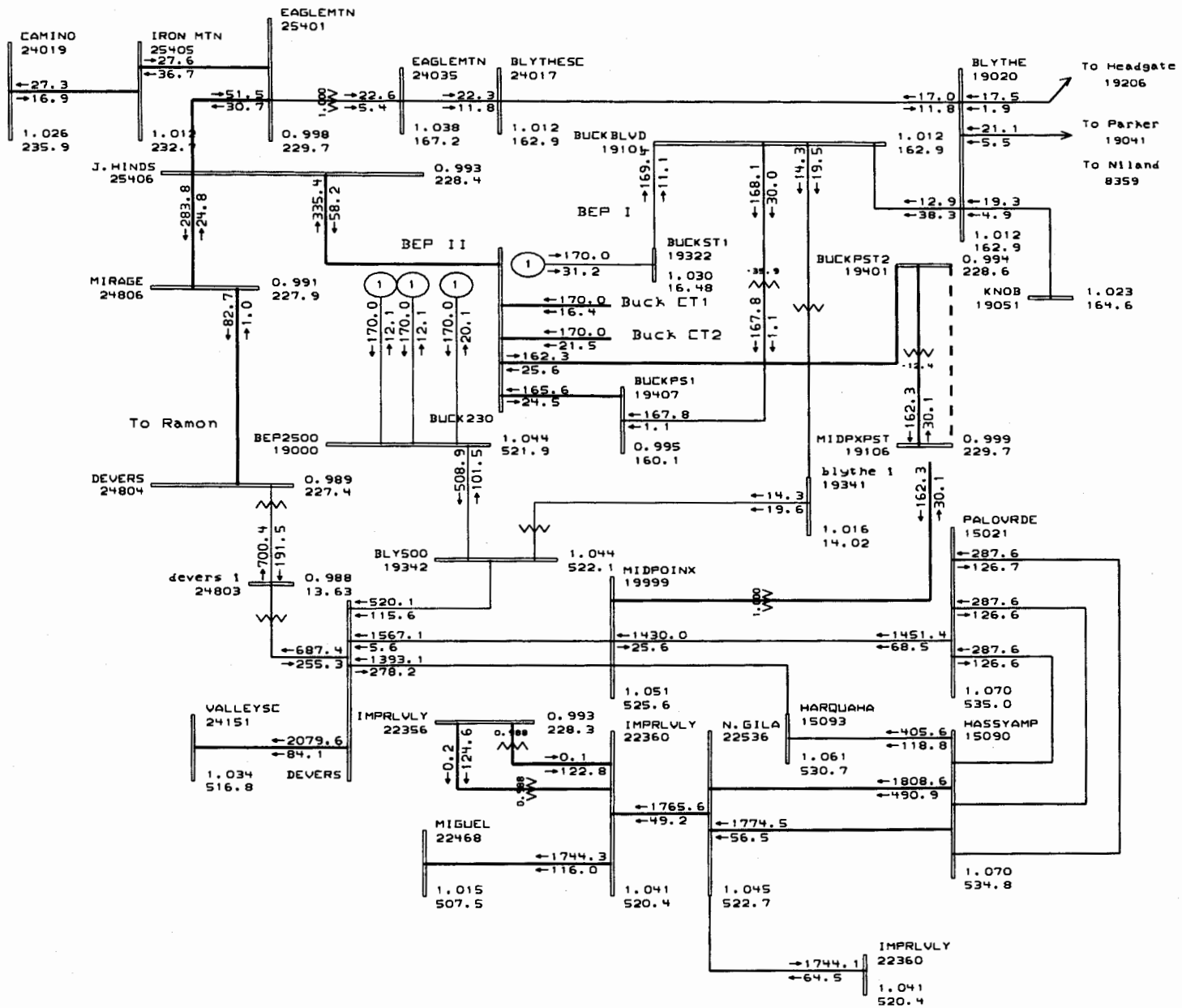

General Electric International, Inc. PSLF Program MW/MVAR Sat Jun 25 15:10:32 2005

GENERAL ELECTRIC COMPANY

[CO1 2742MW][PDCI 971MW][Path 15 3414MW][BORAH W 1739MW]
[N JOHNDAY 3712MW][LC GEN 4981MW][UC GEN 6249MW][MP-SL 619MW]

[NW-CANADA -370MW][IDAHO-NW 451MW][BRIDGER W 1735MW][TOT 2 -124MW]
[SCIT 10481MW][WOR 8970MW][EOR 9255MW][IPP DC 1854MW][PATH 26-1495MW

bep2_a.drw
case2_a_wopumps.sav
Rating = 1

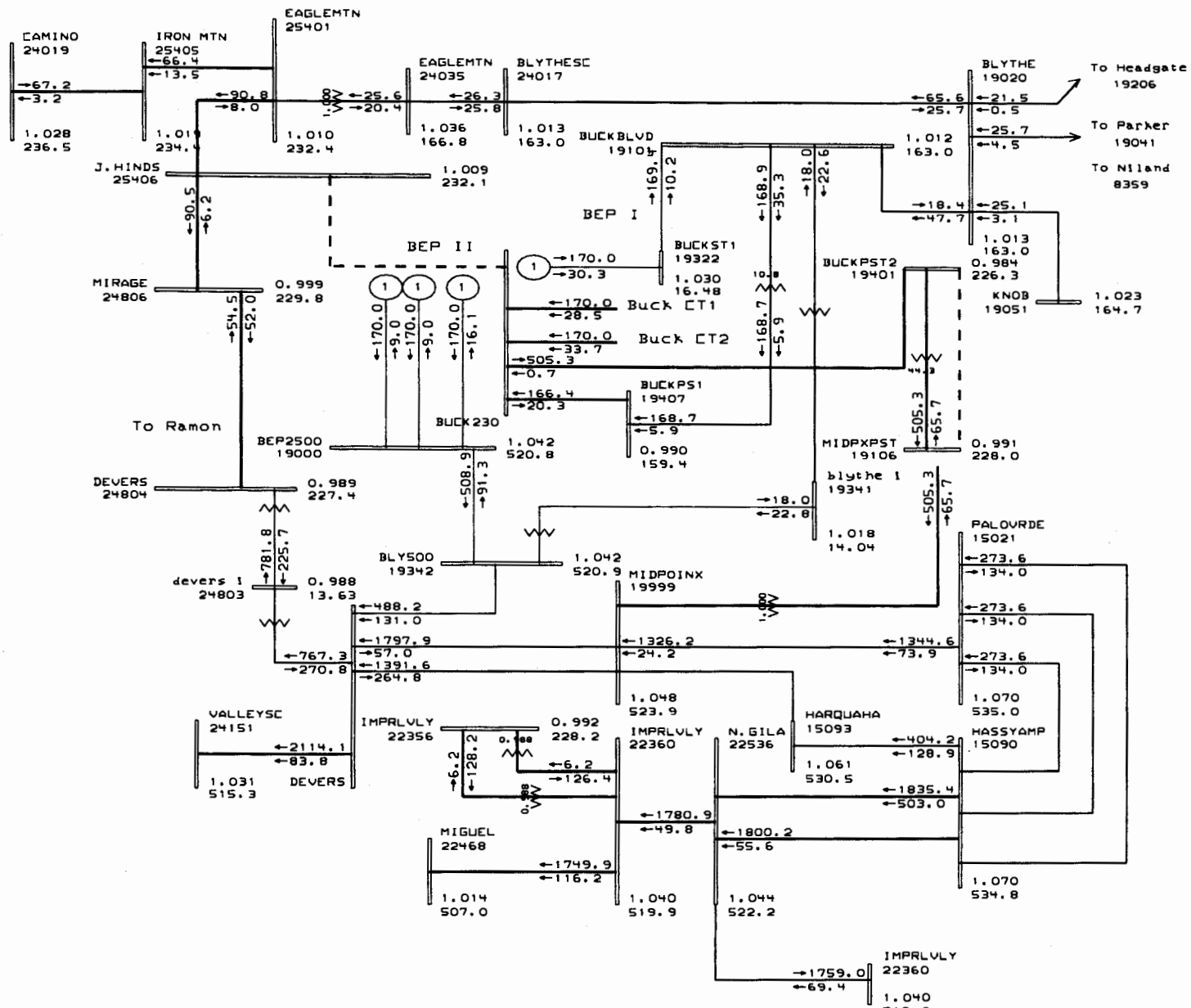

General Electric International, Inc. PSLF Program MW/MVAR Sat Jun 25 15:11:52 2005

GENERAL ELECTRIC COMPANY

[EOI 2742MW][PDCI 971MW][Path 15 3414MW][BORAH W 1739MW]
[N JOHNDAY 3712MW][LC GEN 4981MW][UC GEN 6249MW][MP-SL 619MW]

[NW-CANADA -370MW][IDAHO-NW 451MW][BRIDGER W 1735MW][TOT 2 -124MW]
[SCIT 10481MW][WOR 8970MW][EOR 9255MW][IPP DC 1854MW][PATH 26-1495MW

bep2_a.drw
2b.sav
Rating = 1

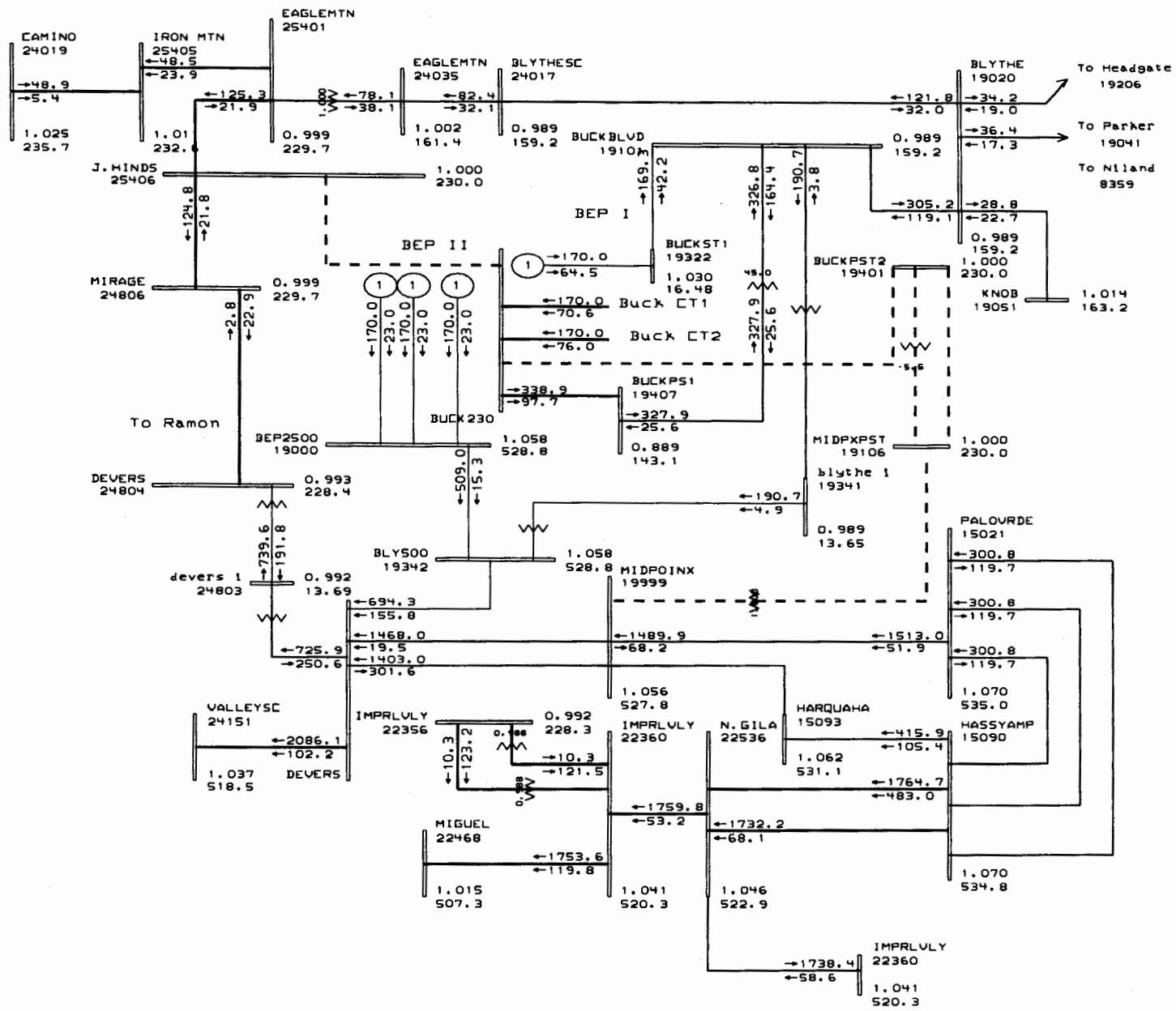

General Electric International, Inc. PSLF Program MW/MVAR Sat Jun 25 15:14:14 2005

GENERAL ELECTRIC COMPANY

[CO] 2742MW][PDC] 971MW][Path 15 3414MW][BORAH W 1739MW]
[N JOHNDAY 3712MW][LC GEN 4981MW][UC GEN 6249MW][MP-SL 619MW]

[NW-CANADA -370MW][IDAHO-NW 451MW][BRIDGER W 1735MW][TOT 2 -124MW]
[SC[T 10481MW][WOR 8970MW][EOR 9255MW][IPP DC 1854MW][PATH 26-1495MW

bep2_a.drw
2c.sav
Rating = 1

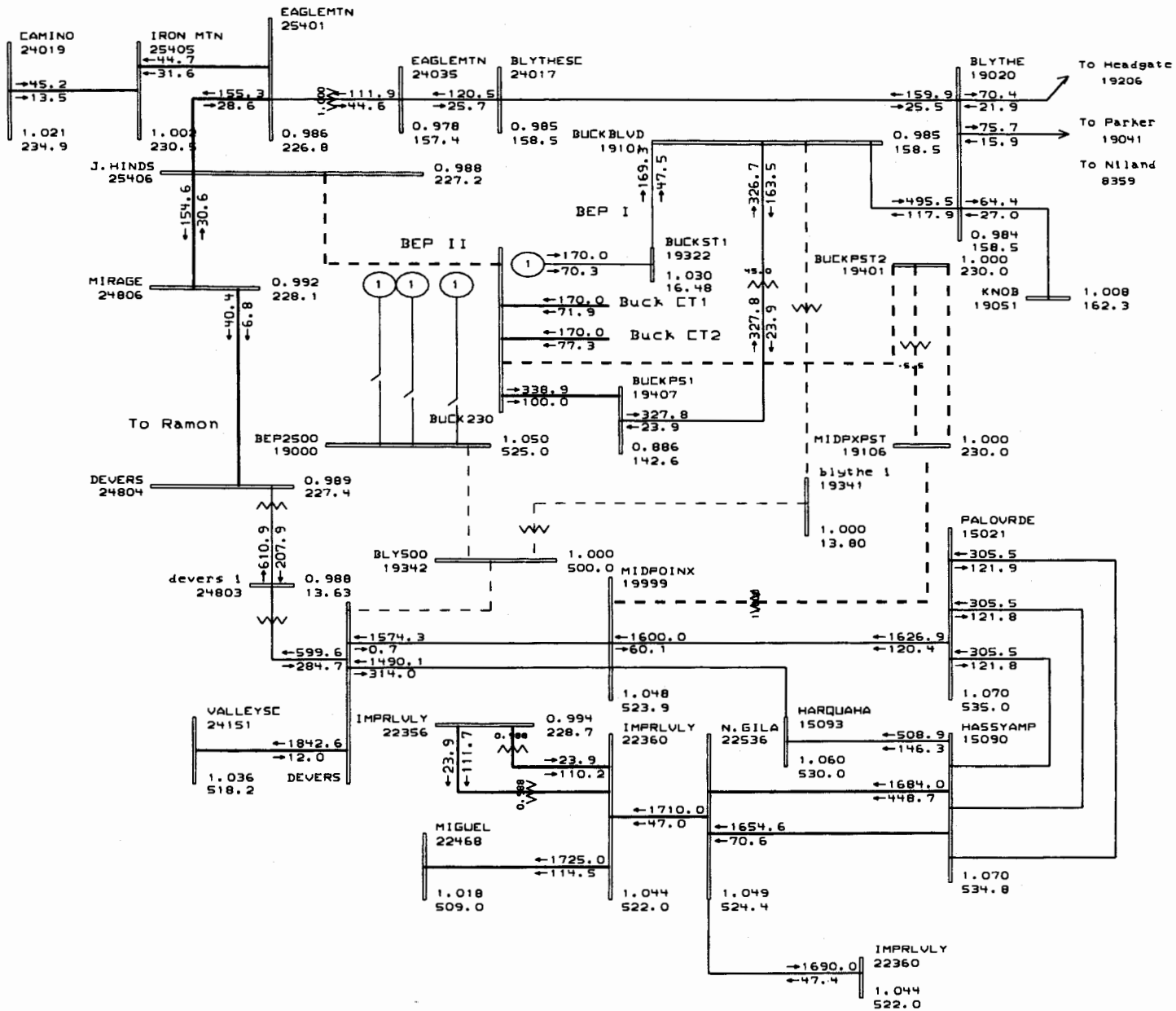

General Electric International, Inc. PSLF Program MW/MVAR Sat Jun 25 15:16:24 2005

GENERAL ELECTRIC COMPANY

[CO] 2742MW][PDCI 971MW][Path 15 3414MW][BORAH W 1739MW]
[N JOHNDAY 3712MW][LC GEN 4981MW][UC GEN 6249MW][MP-SL 619MW]

[NW-CANADA -370MW][IDAHO-NW 451MW][BRIDGER W 1735MW][TOT 2 -124MW]
[SCIT 10481MW][WOR 8970MW][EOR 9255MW][IPP DC 1854MW][PATH 26-1495MW

bep2_a.drw
2d.sav
Rating = 1

Table 2
Transmission Lines and Transformers Overloads
System Configuration with PVD2

Contingency	Monitored Element	Area	Rating	2_a	2_b	2_c	2_d
ALIS	HAVASU12 13.20-HAVASU 230.00 ck=1	WAPA L.C.	100 MVA	1.033	1.034	1.04	1.048
ALIS	HAVASU34 13.20-HAVASU 230.00 ck=1	WAPA L.C.	100 MVA	1.033	1.034	1.04	1.048
ALIS	HAVASU56 13.20-HAVASU 230.00 ck=1	WAPA L.C.	100 MVA	1.033	1.034	1.04	1.048
BUCK230 230.00-J.HINDS 230.00 ck=1	MEAD 500.00-PERKINS 500.00 ck=1	WAPA L.C.	1430 Amps	1.002			
DAVIS 230.00-MEAD N 230.00 ck=1	MEAD 500.00-PERKINS 500.00 ck=1	WAPA L.C.	1430 Amps	1.001	1.001	1.002	1.002
DEVERS 500.00-DEVERS 230.00 ck=1	MEAD 500.00-PERKINS 500.00 ck=1	WAPA L.C.	1430 Amps	1.002	1.006	1.005	1.002
DEVERS 500.00-DEVERS 230.00 ck=2	MEAD 500.00-PERKINS 500.00 ck=1	WAPA L.C.	1430 Amps	1.003	1.007	1.005	1.002
DEVERS 500.00-VALLEYSC 500.00 ck=1	LIBERTY 345.00-PEACOCK 345.00 ck=1	WAPA L.C.	850 Amps		1.001		
DEVERS 500.00-VALLEYSC 500.00 ck=1	MEAD 500.00-PERKINS 500.00 ck=1	WAPA L.C.	1430 Amps	1.197	1.204	1.199	1.176
H ALLEN 500.00-MEAD 500.00 ck=1	MEAD 500.00-PERKINS 500.00 ck=1	WAPA L.C.	1430 Amps	1.021	1.021	1.021	1.02
HARQUAHA 500.00-DEVERS 500.00 ck=1	MEAD 500.00-PERKINS 500.00 ck=1	WAPA L.C.	1430 Amps	1.114	1.115	1.115	1.125
LIBERTY 345.00-LIBTYPHS 230.00 ck=1	MEAD 500.00-PERKINS 500.00 ck=1	WAPA L.C.	1430 Amps	1.059	1.059	1.059	1.059
LIBERTY 345.00-PEACOCK 345.00 ck=1	MEAD 500.00-PERKINS 500.00 ck=1	WAPA L.C.	1430 Amps	1.059	1.059	1.059	1.059
LIBTYPHS 230.00-LIBERTY 230.00 ck=1	MEAD 500.00-PERKINS 500.00 ck=1	WAPA L.C.	1430 Amps	1.059	1.059	1.059	1.059
MEAD 345.00-MEAD N 230.00 ck=1	MEAD 500.00-PERKINS 500.00 ck=1	WAPA L.C.	1430 Amps	1.056	1.057	1.057	1.057
MEAD 500.00-PERKINS 500.00 ck=1	LIBERTY 345.00-PEACOCK 345.00 ck=1	WAPA L.C.	850 Amps	1.062	1.062	1.063	1.062
MIDPOINX 500.00-DEVERS 500.00 ck=1	HAVASU12 13.20-HAVASU 230.00 ck=1	WAPA L.C.	100 MVA			1.051	
MIDPOINX 500.00-DEVERS 500.00 ck=1	HAVASU34 13.20-HAVASU 230.00 ck=1	WAPA L.C.	100 MVA			1.051	
MIDPOINX 500.00-DEVERS 500.00 ck=1	HAVASU56 13.20-HAVASU 230.00 ck=1	WAPA L.C.	100 MVA			1.051	
MIDPOINX 500.00-DEVERS 500.00 ck=1	MEAD 500.00-PERKINS 500.00 ck=1	WAPA L.C.	1430 Amps	1.122	1.163	1.143	1.157
MOENKOPI 500.00-ELDORDO 500.00 ck=1	MEAD 500.00-PERKINS 500.00 ck=1	WAPA L.C.	1430 Amps	1.191	1.196	1.192	1.186
NILAND 161.00-BLYTHE 161.00 ck=1	HAVASU12 13.20-HAVASU 230.00 ck=1	WAPA L.C.	100 MVA				1.064
NILAND 161.00-BLYTHE 161.00 ck=1	HAVASU34 13.20-HAVASU 230.00 ck=1	WAPA L.C.	100 MVA				1.064
NILAND 161.00-BLYTHE 161.00 ck=1	HAVASU56 13.20-HAVASU 230.00 ck=1	WAPA L.C.	100 MVA				1.064
PALOVRDE 500.00-MIDPOINX 500.00 ck=1	HAVASU12 13.20-HAVASU 230.00 ck=1	WAPA L.C.	100 MVA		1.045		
PALOVRDE 500.00-MIDPOINX 500.00 ck=1	HAVASU34 13.20-HAVASU 230.00 ck=1	WAPA L.C.	100 MVA		1.045		
PALOVRDE 500.00-MIDPOINX 500.00 ck=1	HAVASU56 13.20-HAVASU 230.00 ck=1	WAPA L.C.	100 MVA		1.045		
PALOVRDE 500.00-MIDPOINX 500.00 ck=1	MEAD 500.00-PERKINS 500.00 ck=1	WAPA L.C.	1430 Amps	1.134	1.122	1.139	1.153
PARKER 161.00-PARKER 230.00 ck=1	PARKER 161.00-PARKER 230.00 ck=2	WAPA L.C.	167 MVA				1.094
PARKER 161.00-PARKER 230.00 ck=2	PARKER 161.00-PARKER 230.00 ck=1	WAPA L.C.	167 MVA				1.094
PARKER 230.00-HAVASU 230.00 ck=1	MEAD 500.00-PERKINS 500.00 ck=1	WAPA L.C.	1430 Amps		1		
PEACOCK 345.00-MEAD 345.00 ck=1	MEAD 500.00-PERKINS 500.00 ck=1	WAPA L.C.	1430 Amps	1.056	1.057	1.057	1.057
SERRANO 500.00-VALLEYSC 500.00 ck=1	MEAD 500.00-PERKINS 500.00 ck=1	WAPA L.C.	1430 Amps	1.093	1.099	1.094	1.072

Table 2
Transmission Lines and Transformers Overloads
System Configuration with PVD2

Contingency	Monitored Element	Area	Rating	2_a	2_b	2_c	2_d
ALIS	MNTV-CT1 18.00-MNTVIEW 230.00 ck=1	SOCALIF	123 MVA	1.194	1.194	1.187	1.245
ALIS	MNTV-CT2 18.00-MNTVIEW 230.00 ck=1	SOCALIF	123 MVA	1.194	1.194	1.187	1.245
ALIS	MNTV-CT3 18.00-MNTVIEW 230.00 ck=1	SOCALIF	123 MVA	1.194	1.194	1.187	1.245
ALIS	MNTV-CT4 18.00-MNTVIEW 230.00 ck=1	SOCALIF	123 MVA	1.194	1.194	1.187	1.245
ALIS	SEARLES 34.50-KERRMGEE 13.80 ck=1	SOCALIF	28 MVA	1.128	1.128	1.128	1.222
ALIS	SEARLES 115.00-SEARLES 34.50 ck=1	SOCALIF	28 MVA	1.232	1.232	1.232	1.332
BIG CRK1 230.00-RECTOR 230.00 ck=1	BIG CRK3 230.00-RECTOR 230.00 ck=1	SOCALIF	886 Amps	1.096	1.096	1.096	1.149
BIG CRK3 230.00-RECTOR 230.00 ck=1	BIG CRK1 230.00-RECTOR 230.00 ck=1	SOCALIF	826 Amps	1.105	1.105	1.104	1.158
BLY500 500.00-DEVERS 500.00 ck=1	MIDPXPST 230.00-BUCKPST2 230.00 ck=1	SOCALIF	600 MVA		1.011		
BLY500 500.00-DEVERS 500.00 ck=1	MNTV-CT1 18.00-MNTVIEW 230.00 ck=1	SOCALIF	123 MVA	1.207	1.208		
BLY500 500.00-DEVERS 500.00 ck=1	MNTV-CT2 18.00-MNTVIEW 230.00 ck=1	SOCALIF	123 MVA	1.207	1.208		
BLY500 500.00-DEVERS 500.00 ck=1	MNTV-CT3 18.00-MNTVIEW 230.00 ck=1	SOCALIF	123 MVA	1.207	1.208		
BLY500 500.00-DEVERS 500.00 ck=1	MNTV-CT4 18.00-MNTVIEW 230.00 ck=1	SOCALIF	123 MVA	1.207	1.208		
CAL ELEC 115.00-TAP901 115.00 ck=1	CAL ELEC 115.00-SHANDIN 115.00 ck=1	SOCALIF	830 Amps	1.071	1.071	1.075	1.128
CONTROL 115.00-INYOKERN 115.00 ck=1	INYO 115.00-INYO PS 115.00 ck=1	SOCALIF	56 MVA	1.045	1.046	1.045	1.123
CONTROL 115.00-INYOKERN 115.00 ck=2	INYO 115.00-INYO PS 115.00 ck=1	SOCALIF	56 MVA	1.045	1.046	1.045	1.123
DEVERS 500.00-DEVERS 230.00 ck=1	devers i 13.80-DEVERS 230.00 ck=2	SOCALIF	1120 MVA	1.089	1.232	1.157	
DEVERS 500.00-DEVERS 230.00 ck=2	devers i 13.80-DEVERS 230.00 ck=1	SOCALIF	1120 MVA	1.093	1.235	1.16	
DEVERS 500.00-VALLEYSC 500.00 ck=1	devers i 13.80-DEVERS 230.00 ck=1	SOCALIF	1120 MVA	1.083	1.175	1.133	
DEVERS 500.00-VALLEYSC 500.00 ck=1	devers i 13.80-DEVERS 230.00 ck=2	SOCALIF	1120 MVA	1.083	1.175	1.133	
DEVERS 500.00-VALLEYSC 500.00 ck=1	MNTV-CT1 18.00-MNTVIEW 230.00 ck=1	SOCALIF	123 MVA	1.288	1.291	1.277	1.311
DEVERS 500.00-VALLEYSC 500.00 ck=1	MNTV-CT2 18.00-MNTVIEW 230.00 ck=1	SOCALIF	123 MVA	1.288	1.291	1.277	1.311
DEVERS 500.00-VALLEYSC 500.00 ck=1	MNTV-CT3 18.00-MNTVIEW 230.00 ck=1	SOCALIF	123 MVA	1.288	1.291	1.277	1.311
DEVERS 500.00-VALLEYSC 500.00 ck=1	MNTV-CT4 18.00-MNTVIEW 230.00 ck=1	SOCALIF	123 MVA	1.288	1.291	1.277	1.311
DEVERS 500.00-VALLEYSC 500.00 ck=1	VSTA 230.00-SANBRDNO 230.00 ck=2	SOCALIF	2299 Amps	1.037	1.038	1.031	
EAGLROCK 230.00-EAGLROCK 66.00 ck=3	EAGLROCK 230.00-EAGLROCK 66.00 ck=4	SOCALIF	129 MVA	1.04	1.04	1.04	1.04
EAGLROCK 230.00-EAGLROCK 66.00 ck=4	EAGLROCK 230.00-EAGLROCK 66.00 ck=3	SOCALIF	130 MVA	1.032	1.032	1.032	1.032
EDWARDS 115.00-HOLGATE 115.00 ck=1	HOLGATE 115.00-KRAMER 115.00 ck=1	SOCALIF	415 Amps	1.057	1.057	1.057	1.118
EL NIDO 230.00-EL NIDO 66.00 ck=1	EL NIDO 230.00-EL NIDO 66.00 ck=3	SOCALIF	280 MVA	1.424	1.424	1.424	1.424
EL NIDO 230.00-EL NIDO 66.00 ck=3	EL NIDO 230.00-EL NIDO 66.00 ck=1	SOCALIF	280 MVA	1.426	1.426	1.426	1.426
ELDORDO 500.00-LUGO 500.00 ck=1	MNTV-CT1 18.00-MNTVIEW 230.00 ck=1	SOCALIF	123 MVA	1.213	1.213	1.207	1.263
ELDORDO 500.00-LUGO 500.00 ck=1	MNTV-CT2 18.00-MNTVIEW 230.00 ck=1	SOCALIF	123 MVA	1.213	1.213	1.207	1.263
ELDORDO 500.00-LUGO 500.00 ck=1	MNTV-CT3 18.00-MNTVIEW 230.00 ck=1	SOCALIF	123 MVA	1.213	1.213	1.207	1.263
ELDORDO 500.00-LUGO 500.00 ck=1	MNTV-CT4 18.00-MNTVIEW 230.00 ck=1	SOCALIF	123 MVA	1.213	1.213	1.207	1.263
ETIWANDA 230.00-SANBRDNO 230.00 ck=1	VSTA 230.00-SANBRDNO 230.00 ck=2	SOCALIF	2299 Amps	1.08	1.075	1.069	1.03

Table 2
Transmission Lines and Transformers Overloads
System Configuration with PVD2

Contingency	Monitored Element	Area	Rating	2_a	2_b	2_c	2_d
HARQUAHA 500.00-DEVERS 500.00 ck=1	MIDPOINX 500.00-DEVERS 500.00 ck=1	SOCALIF	2700 Amps		1.052		
INYO 230.00-COTTONWD 230.00 ck=1	CONTROL 115.00-INYOKERN 115.00 ck=1	SOCALIF	415 Amps	1.011	1.011	1.011	1.046
INYO 230.00-COTTONWD 230.00 ck=1	CONTROL 115.00-INYOKERN 115.00 ck=2	SOCALIF	415 Amps	1.011	1.011	1.011	1.046
INYO 230.00-COTTONWD 230.00 ck=1	INYO 115.00-INYO PS 115.00 ck=1	SOCALIF	56 MVA	1.794	1.794	1.794	1.793
INYO 230.00-COTTONWD 230.00 ck=1	INYO 230.00-INYO PS 115.00 ck=1	SOCALIF	50 MVA	1.047	1.047	1.047	1.056
INYO 230.00-COTTONWD 230.00 ck=1	INYO 230.00-INYO PS 115.00 ck=2	SOCALIF	50 MVA	1.047	1.047	1.047	1.056
INYO 230.00-COTTONWD 230.00 ck=1	SEARLES 115.00-SEARLES 34.50 ck=1	SOCALIF	28 MVA	1.296	1.296	1.296	1.395
INYOKERN 115.00-KRAMER 115.00 ck=1	INYO 115.00-INYO PS 115.00 ck=1	SOCALIF	56 MVA	1.044	1.045	1.044	1.13
INYOKERN 115.00-KRAMER 115.00 ck=1	SEARLES 115.00-SEARLES 34.50 ck=1	SOCALIF	28 MVA	1.251	1.251	1.251	1.35
KRAMER 230.00-LUGO 230.00 ck=1	INYO 115.00-INYO PS 115.00 ck=1	SOCALIF	56 MVA				1.079
KRAMER 230.00-LUGO 230.00 ck=1	KRAMER 230.00-LUGO 230.00 ck=2	SOCALIF	1200 Amps				1.048
KRAMER 230.00-LUGO 230.00 ck=2	INYO 115.00-INYO PS 115.00 ck=1	SOCALIF	56 MVA				1.079
KRAMER 230.00-LUGO 230.00 ck=2	KRAMER 230.00-LUGO 230.00 ck=1	SOCALIF	1200 Amps				1.048
LCIENEGA 230.00-LCIENEGA 66.00 ck=3	LCIENEGA 230.00-LCIENEGA 66.00 ck=4	SOCALIF	288 MVA	1.071	1.071	1.071	1.071
LCIENEGA 230.00-LCIENEGA 66.00 ck=4	LCIENEGA 230.00-LCIENEGA 66.00 ck=3	SOCALIF	280 MVA	1.101	1.101	1.101	1.101
LUGO 500.00-LUGO 230.00 ck=1	INYO 115.00-INYO PS 115.00 ck=1	SOCALIF	56 MVA				1.022
LUGO 500.00-LUGO 230.00 ck=2	INYO 115.00-INYO PS 115.00 ck=1	SOCALIF	56 MVA				1.023
LUGO 500.00-MOHAVE 500.00 ck=1	MNTV-CT1 18.00-MNTVIEW 230.00 ck=1	SOCALIF	123 MVA	1.213	1.213	1.207	1.263
LUGO 500.00-MOHAVE 500.00 ck=1	MNTV-CT2 18.00-MNTVIEW 230.00 ck=1	SOCALIF	123 MVA	1.213	1.213	1.207	1.263
LUGO 500.00-MOHAVE 500.00 ck=1	MNTV-CT3 18.00-MNTVIEW 230.00 ck=1	SOCALIF	123 MVA	1.213	1.213	1.207	1.263
LUGO 500.00-MOHAVE 500.00 ck=1	MNTV-CT4 18.00-MNTVIEW 230.00 ck=1	SOCALIF	123 MVA	1.213	1.213	1.207	1.263
LUGO 500.00-VICTORVL 500.00 ck=1	MNTV-CT1 18.00-MNTVIEW 230.00 ck=1	SOCALIF	123 MVA	1.204	1.204	1.198	1.255
LUGO 500.00-VICTORVL 500.00 ck=1	MNTV-CT2 18.00-MNTVIEW 230.00 ck=1	SOCALIF	123 MVA	1.204	1.204	1.198	1.255
LUGO 500.00-VICTORVL 500.00 ck=1	MNTV-CT3 18.00-MNTVIEW 230.00 ck=1	SOCALIF	123 MVA	1.204	1.204	1.198	1.255
LUGO 500.00-VICTORVL 500.00 ck=1	MNTV-CT4 18.00-MNTVIEW 230.00 ck=1	SOCALIF	123 MVA	1.204	1.204	1.198	1.255
MEAD 500.00-PERKINS 500.00 ck=1	MNTV-CT1 18.00-MNTVIEW 230.00 ck=1	SOCALIF	123 MVA	1.21	1.211	1.206	1.261
MEAD 500.00-PERKINS 500.00 ck=1	MNTV-CT2 18.00-MNTVIEW 230.00 ck=1	SOCALIF	123 MVA	1.21	1.211	1.206	1.261
MEAD 500.00-PERKINS 500.00 ck=1	MNTV-CT3 18.00-MNTVIEW 230.00 ck=1	SOCALIF	123 MVA	1.21	1.211	1.206	1.261
MEAD 500.00-PERKINS 500.00 ck=1	MNTV-CT4 18.00-MNTVIEW 230.00 ck=1	SOCALIF	123 MVA	1.21	1.211	1.206	1.261
MIDPOINX 500.00-DEVERS 500.00 ck=1	J.HINDS 230.00-MIRAGE 230.00 ck=1	SOCALIF	896 Amps	1.215			
MIDPOINX 500.00-DEVERS 500.00 ck=1	MNTV-CT1 18.00-MNTVIEW 230.00 ck=1	SOCALIF	123 MVA	1.205		1.2	1.264
MIDPOINX 500.00-DEVERS 500.00 ck=1	MNTV-CT2 18.00-MNTVIEW 230.00 ck=1	SOCALIF	123 MVA	1.205		1.2	1.264
MIDPOINX 500.00-DEVERS 500.00 ck=1	MNTV-CT3 18.00-MNTVIEW 230.00 ck=1	SOCALIF	123 MVA	1.205		1.2	1.264
MIDPOINX 500.00-DEVERS 500.00 ck=1	MNTV-CT4 18.00-MNTVIEW 230.00 ck=1	SOCALIF	123 MVA	1.205		1.2	1.264
MNTVIEW 230.00-SANBRDNO 230.00 ck=1	MNTVIEW 230.00-SANBRDNO 230.00 ck=2	SOCALIF	2289 Amps	1.053	1.053	1.047	1.097

Table 2
Transmission Lines and Transformers Overloads
System Configuration with PVD2

Contingency	Monitored Element	Area	Rating	2_a	2_b	2_c	2_d
MNTVIEW 230.00-SANBRDNO 230.00 ck=2	MNTVIEW 230.00-SANBRDNO 230.00 ck=1	SOCALIF	2289 Amps	1.053	1.053	1.047	1.097
MNTV-ST1 18.00-MNTVIEW 230.00 ck=1	MNTV-CT1 18.00-MNTVIEW 230.00 ck=1	SOCALIF	123 MVA	1.215	1.215	1.207	1.264
MNTV-ST1 18.00-MNTVIEW 230.00 ck=1	MNTV-CT2 18.00-MNTVIEW 230.00 ck=1	SOCALIF	123 MVA	1.215	1.215	1.207	1.264
MNTV-ST1 18.00-MNTVIEW 230.00 ck=1	MNTV-CT3 18.00-MNTVIEW 230.00 ck=1	SOCALIF	123 MVA	1.215	1.215	1.207	1.264
MNTV-ST1 18.00-MNTVIEW 230.00 ck=1	MNTV-CT4 18.00-MNTVIEW 230.00 ck=1	SOCALIF	123 MVA	1.215	1.215	1.207	1.264
MNTV-ST2 18.00-MNTVIEW 230.00 ck=1	MNTV-CT1 18.00-MNTVIEW 230.00 ck=1	SOCALIF	123 MVA	1.215	1.215	1.207	1.264
MNTV-ST2 18.00-MNTVIEW 230.00 ck=1	MNTV-CT2 18.00-MNTVIEW 230.00 ck=1	SOCALIF	123 MVA	1.215	1.215	1.207	1.264
MNTV-ST2 18.00-MNTVIEW 230.00 ck=1	MNTV-CT3 18.00-MNTVIEW 230.00 ck=1	SOCALIF	123 MVA	1.215	1.215	1.207	1.264
MNTV-ST2 18.00-MNTVIEW 230.00 ck=1	MNTV-CT4 18.00-MNTVIEW 230.00 ck=1	SOCALIF	123 MVA	1.215	1.215	1.207	1.264
MOENKOPI 500.00-ELDORDO 500.00 ck=1	MNTV-CT1 18.00-MNTVIEW 230.00 ck=1	SOCALIF	123 MVA	1.206	1.206	1.2	1.256
MOENKOPI 500.00-ELDORDO 500.00 ck=1	MNTV-CT2 18.00-MNTVIEW 230.00 ck=1	SOCALIF	123 MVA	1.206	1.206	1.2	1.256
MOENKOPI 500.00-ELDORDO 500.00 ck=1	MNTV-CT3 18.00-MNTVIEW 230.00 ck=1	SOCALIF	123 MVA	1.206	1.206	1.2	1.256
MOENKOPI 500.00-ELDORDO 500.00 ck=1	MNTV-CT4 18.00-MNTVIEW 230.00 ck=1	SOCALIF	123 MVA	1.206	1.206	1.2	1.256
MOHAVE 500.00-ELDORDO 500.00 ck=1	MNTV-CT1 18.00-MNTVIEW 230.00 ck=1	SOCALIF	123 MVA	1.206	1.206	1.2	1.256
MOHAVE 500.00-ELDORDO 500.00 ck=1	MNTV-CT2 18.00-MNTVIEW 230.00 ck=1	SOCALIF	123 MVA	1.206	1.206	1.2	1.256
MOHAVE 500.00-ELDORDO 500.00 ck=1	MNTV-CT3 18.00-MNTVIEW 230.00 ck=1	SOCALIF	123 MVA	1.206	1.206	1.2	1.256
MOHAVE 500.00-ELDORDO 500.00 ck=1	MNTV-CT4 18.00-MNTVIEW 230.00 ck=1	SOCALIF	123 MVA	1.206	1.206	1.2	1.256
OWENSCON 230.00-INYO 230.00 ck=1	INYO 115.00-INYO PS 115.00 ck=1	SOCALIF	56 MVA	1.363	1.363	1.363	1.428
PARKER 230.00-HAVASU 230.00 ck=1	MNTV-CT1 18.00-MNTVIEW 230.00 ck=1	SOCALIF	123 MVA	1.204	1.204	1.198	
PARKER 230.00-HAVASU 230.00 ck=1	MNTV-CT2 18.00-MNTVIEW 230.00 ck=1	SOCALIF	123 MVA	1.204	1.204	1.198	
PARKER 230.00-HAVASU 230.00 ck=1	MNTV-CT3 18.00-MNTVIEW 230.00 ck=1	SOCALIF	123 MVA	1.204	1.204	1.198	
PARKER 230.00-HAVASU 230.00 ck=1	MNTV-CT4 18.00-MNTVIEW 230.00 ck=1	SOCALIF	123 MVA	1.204	1.204	1.198	
S.CLARA 230.00-S.CLARA 66.00 ck=2	S.CLARA 230.00-S.CLARA 66.00 ck=4	SOCALIF	280 MVA	1.041	1.041	1.041	1.021
SERRANO 500.00-VALLEYSC 500.00 ck=1	MNTV-CT1 18.00-MNTVIEW 230.00 ck=1	SOCALIF	123 MVA	1.22	1.221	1.208	1.258
SERRANO 500.00-VALLEYSC 500.00 ck=1	MNTV-CT2 18.00-MNTVIEW 230.00 ck=1	SOCALIF	123 MVA	1.22	1.221	1.208	1.258
SERRANO 500.00-VALLEYSC 500.00 ck=1	MNTV-CT3 18.00-MNTVIEW 230.00 ck=1	SOCALIF	123 MVA	1.22	1.221	1.208	1.258
SERRANO 500.00-VALLEYSC 500.00 ck=1	MNTV-CT4 18.00-MNTVIEW 230.00 ck=1	SOCALIF	123 MVA	1.22	1.221	1.208	1.258
TAP601 115.00-KRAMER 115.00 ck=1	INYO 115.00-INYO PS 115.00 ck=1	SOCALIF	56 MVA				1.002
TAP701 115.00-INYOKERN 115.00 ck=1	INYO 115.00-INYO PS 115.00 ck=1	SOCALIF	56 MVA				1.051
TAP701 115.00-KRAMER 115.00 ck=1	INYO 115.00-INYO PS 115.00 ck=1	SOCALIF	56 MVA				1.043
VICTOR 115.00-KRAMER 115.00 ck=1	INYO 115.00-INYO PS 115.00 ck=1	SOCALIF	56 MVA				1.002

Table 2
Transmission Lines and Transformers Overloads
System Configuration with PVD2

Contingency	Monitored Element	Area	Rating	2_a	2_b	2_c	2_d
DEVERS 500.00-VALLEYSC 500.00 ck=1	HASSYAMP 500.00-N.GILA 500.00 ck=1	SANDIEGO	2200 Amps	1.04	1.058	1.021	
HARQUAHA 500.00-DEVERS 500.00 ck=1	HASSYAMP 500.00-N.GILA 500.00 ck=1	SANDIEGO	2200 Amps	1.019	1.033		
MEAD 500.00-PERKINS 500.00 ck=1	HASSYAMP 500.00-N.GILA 500.00 ck=1	SANDIEGO	2200 Amps		1.004		
MIDPOINX 500.00-DEVERS 500.00 ck=1	HASSYAMP 500.00-N.GILA 500.00 ck=1	SANDIEGO	2200 Amps	1.021	1.062	1.018	
PALOVRDE 500.00-MIDPOINX 500.00 ck=1	HASSYAMP 500.00-N.GILA 500.00 ck=1	SANDIEGO	2200 Amps	1.033	1.039	1.013	
S.ONOFRE 230.00-S.ONOFR2 22.00 ck=1	HASSYAMP 500.00-N.GILA 500.00 ck=1	SANDIEGO	2200 Amps	1.002	1.017		
S.ONOFRE 230.00-S.ONOFR3 22.00 ck=1	HASSYAMP 500.00-N.GILA 500.00 ck=1	SANDIEGO	2200 Amps	1.019	1.034		

Table 2
Transmission Lines and Transformers Overloads
System Configuration with PVD2

Contingency	Monitored Element	Area	Rating	2_a	2_b	2_c	2_d
DEVERS 500.00-VALLEYSC 500.00 ck=1	NAVAJO 500.00-CRYSTAL 500.00 ck=1	LADWP	1630 Amps	1.057	1.076	1.059	1.023
HARQUAHA 500.00-DEVERS 500.00 ck=1	NAVAJO 500.00-CRYSTAL 500.00 ck=1	LADWP	1630 Amps	1.007	1.022	1.009	
MEAD 500.00-PERKINS 500.00 ck=1	NAVAJO 500.00-CRYSTAL 500.00 ck=1	LADWP	1630 Amps	1.138	1.154	1.14	1.117
MIDPOINX 500.00-DEVERS 500.00 ck=1	NAVAJO 500.00-CRYSTAL 500.00 ck=1	LADWP	1630 Amps	1.012	1.05	1.025	1.011
MOENKOPI 500.00-ELDORDO 500.00 ck=1	NAVAJO 500.00-CRYSTAL 500.00 ck=1	LADWP	1630 Amps	1.42	1.444	1.423	1.387
PALOVRDE 500.00-MIDPOINX 500.00 ck=1	NAVAJO 500.00-CRYSTAL 500.00 ck=1	LADWP	1630 Amps	1.018	1.026	1.022	1.008
SERRANO 500.00-VALLEYSC 500.00 ck=1	NAVAJO 500.00-CRYSTAL 500.00 ck=1	LADWP	1630 Amps		1.015		

Table 2
Transmission Lines and Transformers Overloads
System Configuration with PVD2

Contingency	Monitored Element	Area	Rating	2_a	2_b	2_c	2_d
BLYTHE 161.00-BLYTHESC 161.00 ck=1	NILAND 161.00-BLYTHE 161.00 ck=1	IID	592 Amps				1.049
DROP3 92.00-DROP3 6.90 ck=1	DROP3 34.50-DROP3 6.90 ck=1	IID	6 MVA	1.407	1.407	1.407	1.407
DROP3 92.00-DROP4 92.00 ck=1	DROP3 34.50-DROP3 6.90 ck=1	IID	6 MVA	1.407	1.407	1.407	1.407
MIDWAY x 230.00-MIDWAY 92.00 ck=1	MIDWAY x 230.00-MIDWAY 92.00 ck=2	IID	225 MVA	1.32	1.319	1.319	1.321
MIDWAY x 230.00-MIDWAY 92.00 ck=2	MIDWAY x 230.00-MIDWAY 92.00 ck=1	IID	225 MVA	1.32	1.319	1.319	1.321

Table 2
Transmission Lines and Transformers Overloads
System Configuration with PVD2

Contingency	Monitored Element	Area	Rating	2_a	2_b	2_c	2_d
ALIS	DBG 230.00-DBG-ST1 18.00 ck=1	ARIZONA	250 MVA	1.016	1.016	1.016	1.016
ALIS	GILARIVR 500.00-GIL-ST1 18.00 ck=1	ARIZONA	210 MVA	1.207	1.207	1.207	1.207
ALIS	GILARIVR 500.00-GIL-ST2 18.00 ck=1	ARIZONA	210 MVA	1.18	1.18	1.18	1.18
ALIS	GILARIVR 500.00-GIL-ST3 18.00 ck=1	ARIZONA	210 MVA	1.18	1.18	1.18	1.18
ALIS	GILARIVR 500.00-GIL-ST4 18.00 ck=1	ARIZONA	210 MVA	1.207	1.207	1.207	1.207
ALIS	SAG.EAST 115.00-SAG. CT3 13.80 ck=1	ARIZONA	70 MVA	1.003	1.003	1.003	1.003
BUCK230 230.00-J.HINDS 230.00 ck=1	PERKINS 500.00-PERK PS1 500.00 ck=1	ARIZONA	650 MVA	1.014			
BUCK230 230.00-J.HINDS 230.00 ck=1	PERKINS 500.00-PERK PS2 500.00 ck=1	ARIZONA	650 MVA	1.014			
DAVIS 230.00-MEAD N 230.00 ck=1	PERKINS 500.00-PERK PS1 500.00 ck=1	ARIZONA	650 MVA	1.012	1.012	1.013	1.014
DAVIS 230.00-MEAD N 230.00 ck=1	PERKINS 500.00-PERK PS2 500.00 ck=1	ARIZONA	650 MVA	1.012	1.012	1.013	1.014
DEVERS 230.00-OAK_VLLY 230.00 ck=1	PERKINS 500.00-PERK PS1 500.00 ck=1	ARIZONA	650 MVA	1.008	1.008	1.007	
DEVERS 230.00-OAK_VLLY 230.00 ck=1	PERKINS 500.00-PERK PS2 500.00 ck=1	ARIZONA	650 MVA	1.008	1.008	1.007	
DEVERS 230.00-VSTA 230.00 ck=2	PERKINS 500.00-PERK PS1 500.00 ck=1	ARIZONA	650 MVA	1.01	1.01	1.01	1.009
DEVERS 230.00-VSTA 230.00 ck=2	PERKINS 500.00-PERK PS2 500.00 ck=1	ARIZONA	650 MVA	1.01	1.01	1.01	1.009
DEVERS 500.00-DEVERS 230.00 ck=1	PERKINS 500.00-PERK PS1 500.00 ck=1	ARIZONA	650 MVA	1.013	1.017	1.016	1.014
DEVERS 500.00-DEVERS 230.00 ck=1	PERKINS 500.00-PERK PS2 500.00 ck=1	ARIZONA	650 MVA	1.013	1.017	1.016	1.014
DEVERS 500.00-DEVERS 230.00 ck=2	PERKINS 500.00-PERK PS1 500.00 ck=1	ARIZONA	650 MVA	1.014	1.018	1.016	1.014
DEVERS 500.00-DEVERS 230.00 ck=2	PERKINS 500.00-PERK PS2 500.00 ck=1	ARIZONA	650 MVA	1.014	1.018	1.016	1.014
DEVERS 500.00-VALLEYSC 500.00 ck=1	LIBTYPHS 230.00-LIBERTY 230.00 ck=1	ARIZONA	500 MVA	1.002	1.005	1.004	
DEVERS 500.00-VALLEYSC 500.00 ck=1	PERKINS 500.00-PERK PS1 500.00 ck=1	ARIZONA	650 MVA	1.202	1.209	1.204	1.183
DEVERS 500.00-VALLEYSC 500.00 ck=1	PERKINS 500.00-PERK PS2 500.00 ck=1	ARIZONA	650 MVA	1.202	1.209	1.204	1.183
H ALLEN 500.00-MEAD 500.00 ck=1	PERKINS 500.00-PERK PS1 500.00 ck=1	ARIZONA	650 MVA	1.032	1.032	1.031	1.032
H ALLEN 500.00-MEAD 500.00 ck=1	PERKINS 500.00-PERK PS2 500.00 ck=1	ARIZONA	650 MVA	1.032	1.032	1.031	1.032
HARQUAHA 500.00-DEVERS 500.00 ck=1	PERKINS 500.00-PERK PS1 500.00 ck=1	ARIZONA	650 MVA	1.123	1.124	1.124	1.134
HARQUAHA 500.00-DEVERS 500.00 ck=1	PERKINS 500.00-PERK PS2 500.00 ck=1	ARIZONA	650 MVA	1.123	1.124	1.124	1.134
LIBERTY 345.00-LIBTYPHS 230.00 ck=1	PERKINS 500.00-PERK PS1 500.00 ck=1	ARIZONA	650 MVA	1.071	1.072	1.071	1.072
LIBERTY 345.00-LIBTYPHS 230.00 ck=1	PERKINS 500.00-PERK PS2 500.00 ck=1	ARIZONA	650 MVA	1.071	1.072	1.071	1.072
LIBERTY 345.00-PEACOCK 345.00 ck=1	PERKINS 500.00-PERK PS1 500.00 ck=1	ARIZONA	650 MVA	1.07	1.071	1.071	1.071
LIBERTY 345.00-PEACOCK 345.00 ck=1	PERKINS 500.00-PERK PS2 500.00 ck=1	ARIZONA	650 MVA	1.07	1.071	1.071	1.071
LIBTYPHS 230.00-LIBERTY 230.00 ck=1	PERKINS 500.00-PERK PS1 500.00 ck=1	ARIZONA	650 MVA	1.071	1.072	1.071	1.072
LIBTYPHS 230.00-LIBERTY 230.00 ck=1	PERKINS 500.00-PERK PS2 500.00 ck=1	ARIZONA	650 MVA	1.071	1.072	1.071	1.072
MEAD 345.00-MEAD N 230.00 ck=1	PERKINS 500.00-PERK PS1 500.00 ck=1	ARIZONA	650 MVA	1.068	1.069	1.069	1.069
MEAD 345.00-MEAD N 230.00 ck=1	PERKINS 500.00-PERK PS2 500.00 ck=1	ARIZONA	650 MVA	1.068	1.069	1.069	1.069
MEAD 500.00-PERKINS 500.00 ck=1	LIBTYPHS 230.00-LIBERTY 230.00 ck=1	ARIZONA	500 MVA	1.072	1.071	1.073	1.072
MIDPOINX 500.00-DEVERS 500.00 ck=1	PERKINS 500.00-PERK PS1 500.00 ck=1	ARIZONA	650 MVA	1.13	1.17	1.151	1.165

Table 2
Transmission Lines and Transformers Overloads
System Configuration with PVD2

Contingency	Monitored Element	Area	Rating	2_a	2_b	2_c	2_d
MIDPOINX 500.00-DEVERS 500.00 ck=1	PERKINS 500.00-PERK PS2 500.00 ck=1	ARIZONA	650 MVA	1.13	1.17	1.151	1.165
MOENKOPI 500.00-ELDORDO 500.00 ck=1	PERKINS 500.00-PERK PS1 500.00 ck=1	ARIZONA	650 MVA	1.199	1.204	1.201	1.195
MOENKOPI 500.00-ELDORDO 500.00 ck=1	PERKINS 500.00-PERK PS2 500.00 ck=1	ARIZONA	650 MVA	1.199	1.204	1.201	1.195
PALOVRDE 500.00-MIDPOINX 500.00 ck=1	PERKINS 500.00-PERK PS1 500.00 ck=1	ARIZONA	650 MVA	1.142	1.131	1.147	1.161
PALOVRDE 500.00-MIDPOINX 500.00 ck=1	PERKINS 500.00-PERK PS2 500.00 ck=1	ARIZONA	650 MVA	1.142	1.131	1.147	1.161
PARKER 230.00-GENE 230.00 ck=1	PERKINS 500.00-PERK PS1 500.00 ck=1	ARIZONA	650 MVA		1.01	1.01	1.012
PARKER 230.00-GENE 230.00 ck=1	PERKINS 500.00-PERK PS2 500.00 ck=1	ARIZONA	650 MVA		1.01	1.01	1.012
PARKER 230.00-HAVASU 230.00 ck=1	PERKINS 500.00-PERK PS1 500.00 ck=1	ARIZONA	650 MVA	1.011	1.011	1.01	1.01
PARKER 230.00-HAVASU 230.00 ck=1	PERKINS 500.00-PERK PS2 500.00 ck=1	ARIZONA	650 MVA	1.011	1.011	1.01	1.01
PEACOCK 345.00-MEAD 345.00 ck=1	PERKINS 500.00-PERK PS1 500.00 ck=1	ARIZONA	650 MVA	1.068	1.068	1.069	1.069
PEACOCK 345.00-MEAD 345.00 ck=1	PERKINS 500.00-PERK PS2 500.00 ck=1	ARIZONA	650 MVA	1.068	1.068	1.069	1.069
SERRANO 500.00-VALLEYSC 500.00 ck=1	PERKINS 500.00-PERK PS1 500.00 ck=1	ARIZONA	650 MVA	1.103	1.108	1.103	1.082
SERRANO 500.00-VALLEYSC 500.00 ck=1	PERKINS 500.00-PERK PS2 500.00 ck=1	ARIZONA	650 MVA	1.103	1.108	1.103	1.082
SIGURDPS 230.00-GLENCANY 230.00 ck=1	PERKINS 500.00-PERK PS1 500.00 ck=1	ARIZONA	650 MVA	1.011	1.011	1.01	1.01
SIGURDPS 230.00-GLENCANY 230.00 ck=1	PERKINS 500.00-PERK PS2 500.00 ck=1	ARIZONA	650 MVA	1.011	1.011	1.01	1.01
VSTA 230.00-DEVERS 230.00 ck=1	PERKINS 500.00-PERK PS1 500.00 ck=1	ARIZONA	650 MVA	1.01	1.01	1.01	1.009
VSTA 230.00-DEVERS 230.00 ck=1	PERKINS 500.00-PERK PS2 500.00 ck=1	ARIZONA	650 MVA	1.01	1.01	1.01	1.009

Power Flow Plots Case 3

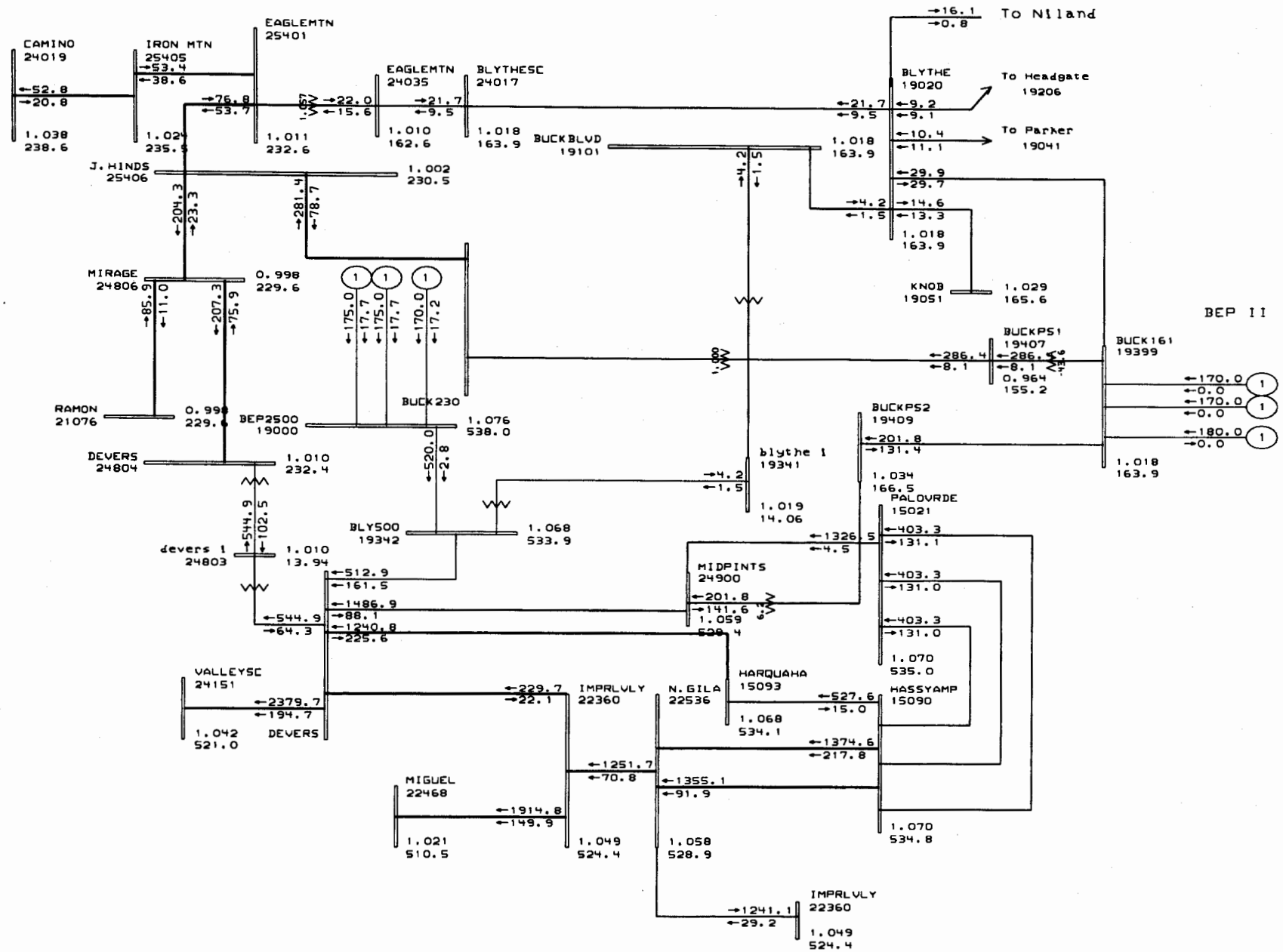

General Electric International, Inc. PSLF Program MW/MVAR Tue Jun 28 10:19:12 2005

GENERAL ELECTRIC COMPANY

[PDCI 971MW][MARKETPLACE - ADELANTO 974MW][Path 15 2516MW][BORAH W 1728MW] [WESTSIDE LOAD10728MW][TOT 2 261MW][KLAMATH FALLS COGEN 484MW][N JOHNDAY 3707

[NW-CANADA -370MW][IDAHO-NW 442MW][BRIDGER W 1738MW][S LUGO 2645MW] [UC GEN 6247MW][WOR 8896MW][EOR 7896MW][IPP DC 1853MW][PATH 26 -587

I:\test3\d-bep11\case11.drw
I:\test3\d-bep11\3_am.sav
Rating = 1

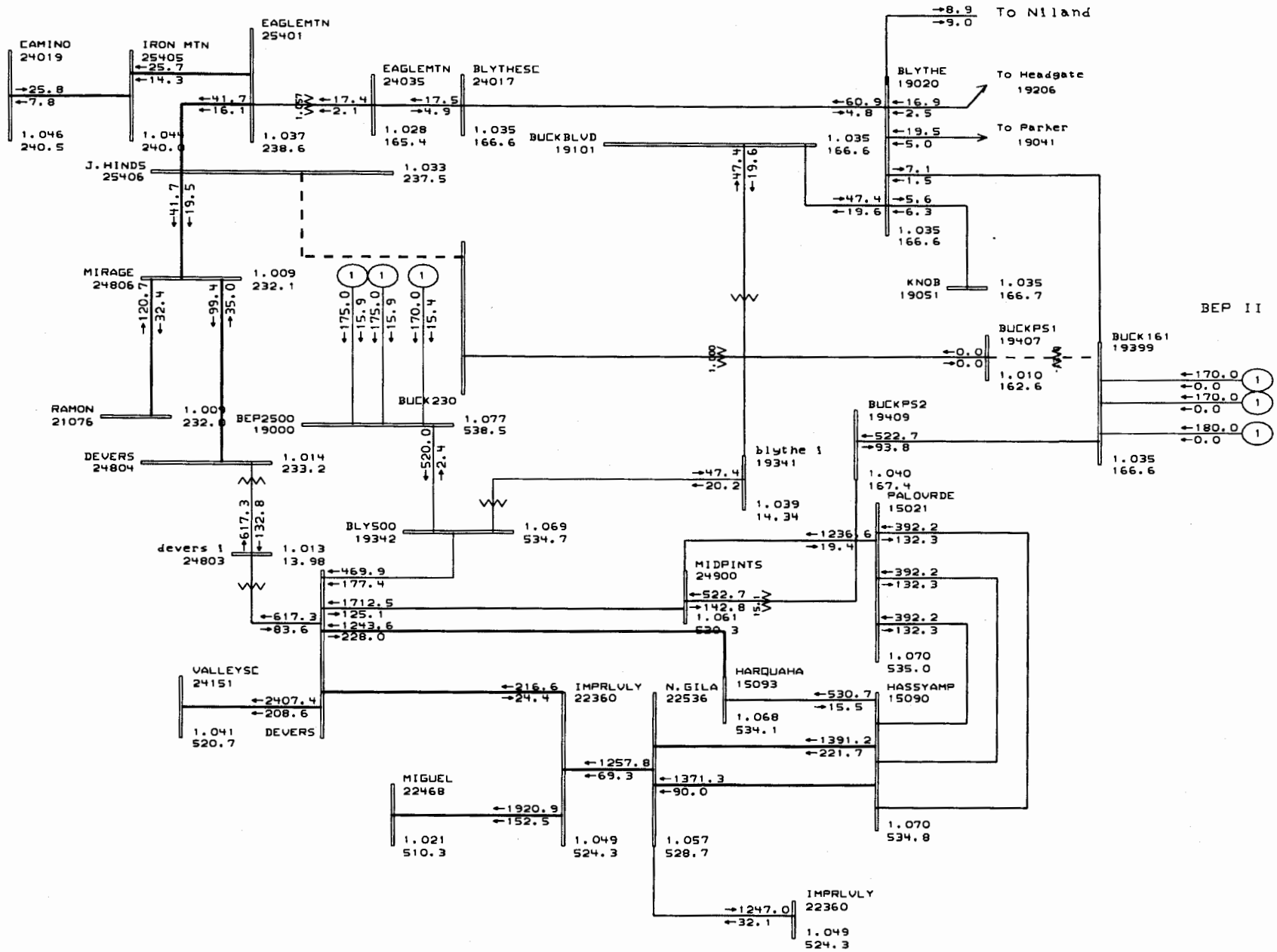

General Electric International, Inc. PSLF Program MW/MVAR Tue Jun 28 10:21:26 2005

GENERAL ELECTRIC COMPANY

[PDCI 971MW][MARKETPLACE - ADELANTO 974MW][Path 15 2516MW][BORAH W 1728MW]
[WESTSIDE LOAD10728MW][TOT 2 261MW][KLAMATH FALLS COGEN 484MW][N JOHNDAY 3707

[NW-CANADA -370MW][IDAHO-NW 442MW][BRIDGER W 1738MW][S LUGO 2645MW]
[UC GEN 6247MW][WOR 8896MW][EOR 7896MW][IPP DC 1853MW][PATH 26 -587

I:\test3\d-bepii\case11.drw
I:\test3\d-bepii\3_bm.sav
Rating = 1

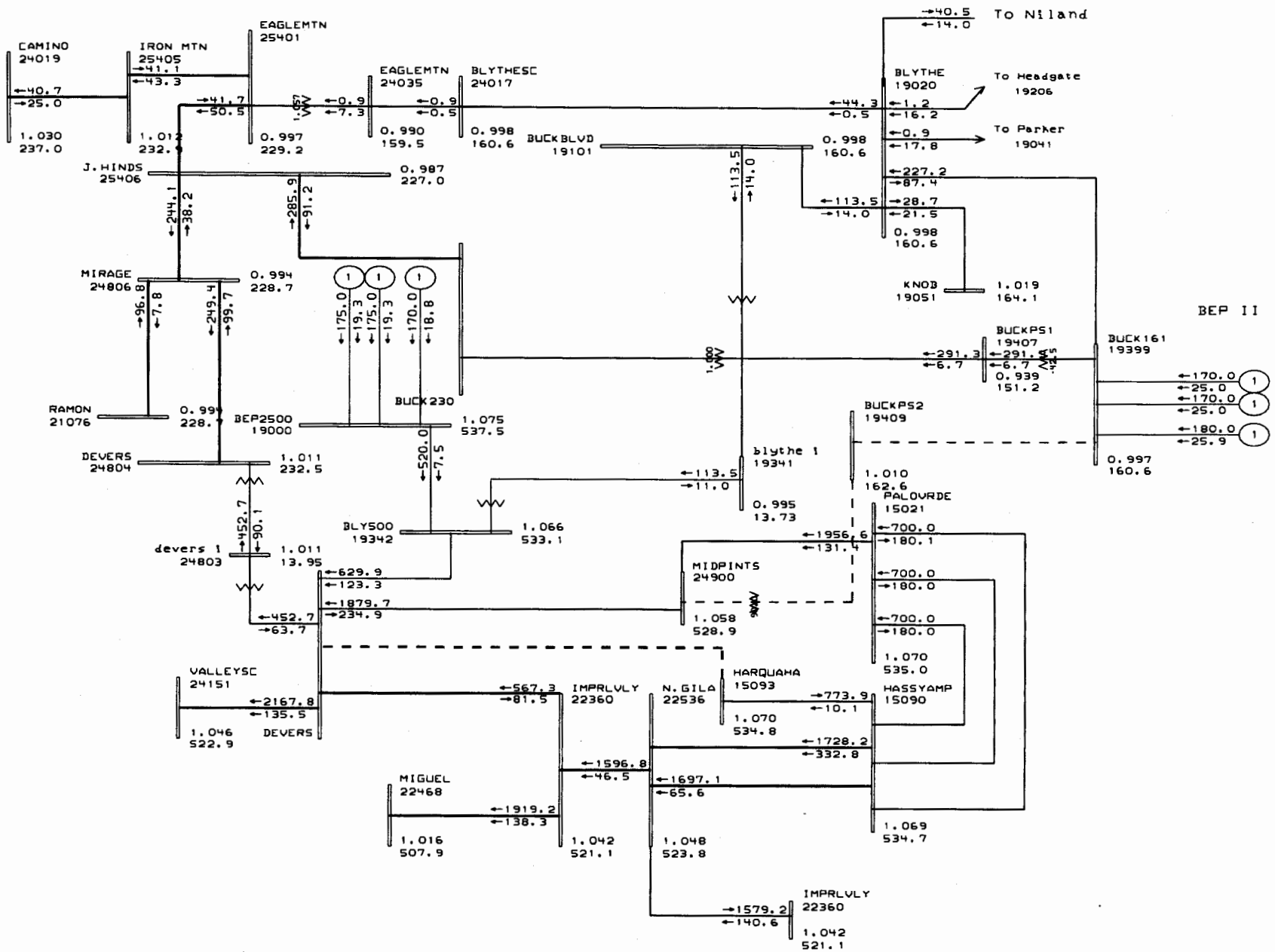

General Electric International, Inc. PSLF Program MW/MVAR Tue Jun 28 10:40:49 2005

GENERAL ELECTRIC COMPANY

[PDCI 971MW][MARKETPLACE - ADELANTO 974MW][Path 15 2516MW][BORAH W 1728MW]
[WESTSIDE LOAD10728MW][TOT 2 261MW][KLAMATH FALLS COGEN 484MW][N JOHNDAY 3707

[NW-CANADA -370MW][IDAHO-NW 442MW][BRIDGER W 1738MW][S LUGO 2645MW]
[UC GEN 6247MW][WOR 8896MW][EOR 7896MW][IPP DC 1853MW][PATH 26 -587

I:\test3\d-bep11\case11.drw
I:\test3\d-bep11\3_c.sav
Rating = 1

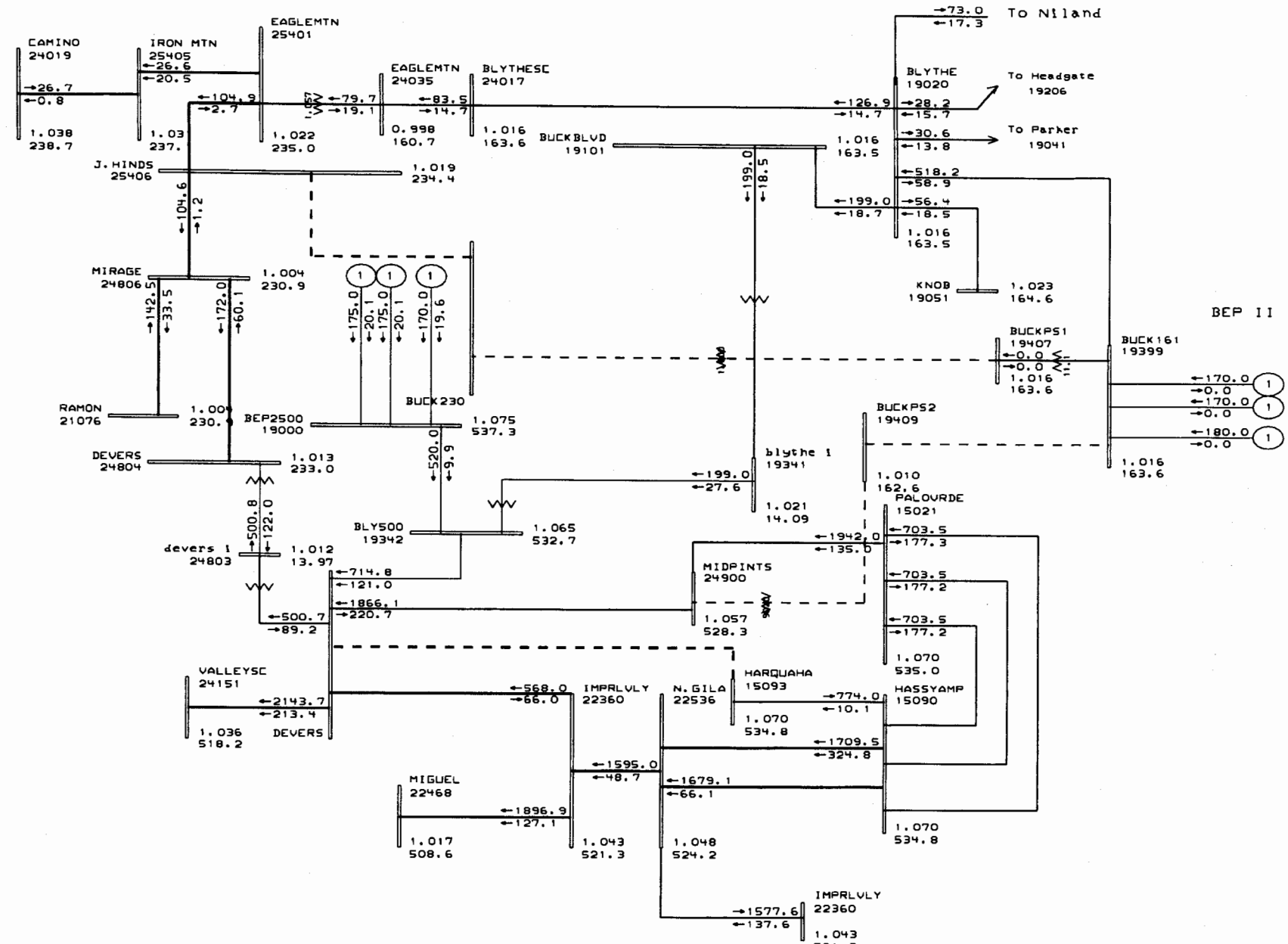

General Electric International, Inc. PSLF Program MW/MVAR Tue Jun 28 10:23:57 2005

GENERAL ELECTRIC COMPANY

[PDCI 971MW][MARKETPLACE - ADELANTO 974MW][Path 15 2516MW][BORAH W 1728MW]
[WESTSIDE LOAD10728MW][TOT 2 261MW][KLAMATH FALLS COGEN 484MW][N JOHNDAY 3707

[NW-CANADA -370MW][IDAHO-NW 442MW][BRIDGER W 1738MW][S LUGO 2645MW]
[UC GEN 6247MW][WOR 8896MW][EOR 7896MW][IPP DC 1853MW][PATH 26 -587

I:\test3\d-bepii\case11.drw
I:\test3\d-bepii\3_d.sav
Rating = 1

Table 3
Summary Case Comparison's
Transmission Lines and Transformers Ovel loads

Contingency	Monitored Element	Area	Rating	3am	3bm	3cm	3d	4am	4bm	4cm	4dm
BLY500 500.00-DEVERS 500.00 ck=1	BUCK161 161.00-BUCKPS1 161.00 ck=1	WAPA L.C.	375 MVA			1.013				1.005	
BLY500 500.00-DEVERS 500.00 ck=1	BUCK161 161.00-BUCKPS2 161.00 ck=1	WAPA L.C.	2480 Amps						1.198		
DEVERS 500.00-VALLEYSC 500.00 ck=1	MEAD 500.00-PERKINS 500.00 ck=1	WAPA L.C.	1501 Amps	1.181	1.161	1.161	1.158	1.158	1.158	1.158	1.157
HARQUAHA 500.00-DEVERS 500.00 ck=1	MEAD 500.00-PERKINS 500.00 ck=1	WAPA L.C.	1501 Amps	1.037	1.041			1.044	1.044	1.044	1.04
MIDPINTS 500.00-DEVERS 500.00 ck=1	MEAD 500.00-PERKINS 500.00 ck=1	WAPA L.C.	1501 Amps	1.044	1.047	1.047	1.047	1.034	1.034	1.034	1.057
MOENKOPI 500.00-ELDORDO 500.00 ck=1	MEAD 500.00-PERKINS 500.00 ck=1	WAPA L.C.	1501 Amps	1.126	1.12	2.3	1.126	1.117	2.246	1.126	1.117
PALOVRDE 500.00-MIDPINTS 500.00 ck=1	MEAD 500.00-PERKINS 500.00 ck=1	WAPA L.C.	1501 Amps	1.04	1.044	1.059	1.059	1.051	1.04	1.04	1.04
SERRANO 500.00-VALLEYSC 500.00 ck=1	MEAD 500.00-PERKINS 500.00 ck=1	WAPA L.C.	1501 Amps	1.087	1.07	1.198	1.087	1.069	1.069	1.069	1.068

Table 3
Summary Case Comparison's
Transmission Lines and Transformers Ovel loads

Contingency	Monitored Element	Area	Rating	3am	3bm	3cm	3d	4am	4bm	4cm	4dm
BLY500 500.00-DEVERS 500.00 ck=1	BLYTHESC 161.00-EAGLEMTN 161.00 ck=1	SOCALIF	605 Amps				1.402				
BLY500 500.00-DEVERS 500.00 ck=1	J.HINDS 230.00-MIRAGE 230.00 ck=1	SOCALIF	896 Amps			1.074					
BLY500 500.00-DEVERS 500.00 ck=1	MIDPINTS 500.00-BUCKPS2 161.00 ck=1	SOCALIF	625 MVA						1.383		
CONTROL 115.00-INYOKERN 115.00 ck=1	INYO 115.00-INYO PS 115.00 ck=1	SOCALIF	56 MVA	1.112	1.096	1.096	1.096	1.096	1.096	1.096	1.096
CONTROL 115.00-INYOKERN 115.00 ck=2	INYO 115.00-INYO PS 115.00 ck=1	SOCALIF	56 MVA	1.112	1.096	1.096	1.096	1.096	1.096	1.096	1.096
DEVERS 500.00-VALLEYSC 500.00 ck=1	DEVERS 230.00-SANBRDNO 230.00 ck=2A	SOCALIF	1150 Amps	1.255	1.144	1.144	1.156	1.156	1.156	1.156	1.14
DEVERS 500.00-VALLEYSC 500.00 ck=1	DEVERS 230.00-VSTA 230.00 ck=2A	SOCALIF	1240 Amps	1.4	1.29	1.29	1.3	1.3	1.3	1.3	1.286
DEVERS 500.00-VALLEYSC 500.00 ck=1	SANBRDNO 230.00-DEVERS 230.00 ck=1A	SOCALIF	796 Amps	1.293	1.179	1.179	1.191	1.191	1.191	1.191	1.174
DEVERS 500.00-VALLEYSC 500.00 ck=1	VSTA 230.00-DEVERS 230.00 ck=1A	SOCALIF	1150 Amps	1.493	1.376	1.376	1.387	1.387	1.387	1.387	1.372
DEVERS 500.00-VALLEYSC 500.00 ck=1	VSTA 230.00-SANBRDNO 230.00 ck=2	SOCALIF	2400 Amps	1.046		1.014			1.046	1.046	
EAGLROCK 230.00-EAGLROCK 66.00 ck=3	EAGLROCK 230.00-EAGLROCK 66.00 ck=4	SOCALIF	129 MVA	1.022	1.021	1.021	1.021	1.021	1.021	1.021	1.021
EAGLROCK 230.00-EAGLROCK 66.00 ck=4	EAGLROCK 230.00-EAGLROCK 66.00 ck=3	SOCALIF	130 MVA	1.014	1.014	1.014	1.014	1.014	1.014	1.014	1.014
EDWARDS 115.00-HOLGATE 115.00 ck=1	HOLGATE 115.00-KRAMER 115.00 ck=1	SOCALIF	415 Amps	1.043	1.041	1.041	1.041	1.042	1.042	1.042	1.041
ETIWANDA 230.00-SANBRDNO 230.00 ck=1	VSTA 230.00-SANBRDNO 230.00 ck=2	SOCALIF	2400 Amps	1.177	1.121	1.121	1.121	1.135	1.135	1.135	1.124
INYO 230.00-COTTONWD 230.00 ck=1	CONTROL 115.00-INYOKERN 115.00 ck=1	SOCALIF	415 Amps	1.005	1.004	1.004	1.007	1.004	1.004	1.004	1.004
INYO 230.00-COTTONWD 230.00 ck=1	CONTROL 115.00-INYOKERN 115.00 ck=2	SOCALIF	415 Amps	1.005	1.004	1.004	1.007	1.004	1.004	1.004	1.004
INYO 230.00-COTTONWD 230.00 ck=1	INYO 115.00-INYO PS 115.00 ck=1	SOCALIF	56 MVA	1.819	1.819	1.819	1.819	1.819	1.819	1.819	1.819
INYO 230.00-COTTONWD 230.00 ck=1	INYO 230.00-INYO PS 115.00 ck=1	SOCALIF	50 MVA	1.076	1.075	1.075	1.076	1.075	1.075	1.075	1.075
INYO 230.00-COTTONWD 230.00 ck=1	INYO 230.00-INYO PS 115.00 ck=2	SOCALIF	50 MVA	1.076	1.075	1.075	1.076	1.075	1.075	1.075	1.075
INYOKERN 115.00-KRAMER 115.00 ck=1	INYO 115.00-INYO PS 115.00 ck=1	SOCALIF	56 MVA	1.221	1.203	1.203	2.379	1.203	1.203	1.203	1.203
INYOKERN 115.00-TAP702 115.00 ck=1	INYOKERN 115.00-TAP703 115.00 ck=1	SOCALIF	415 Amps	1.453	1.453	1.453	2.847	1.453	1.453	1.453	1.453
INYOKERN 115.00-TAP703 115.00 ck=1	INYOKERN 115.00-TAP702 115.00 ck=1	SOCALIF	415 Amps	1.453	1.453	1.453	2.847	1.453	1.453	1.453	1.453
KRAMER 230.00-LUGO 230.00 ck=1	INYO 115.00-INYO PS 115.00 ck=1	SOCALIF	56 MVA	1.083	1.061	1.061	2.104	1.062	1.062	1.062	1.062
KRAMER 230.00-LUGO 230.00 ck=2	INYO 115.00-INYO PS 115.00 ck=1	SOCALIF	56 MVA	1.083	1.061	1.061	2.104	1.062	1.062	1.062	1.062
LCIENEGA 230.00-LCIENEGA 66.00 ck=3	LCIENEGA 230.00-LCIENEGA 66.00 ck=4	SOCALIF	288 MVA	1.022	1.022	1.022	1.022	1.022	1.022	1.022	1.022
LCIENEGA 230.00-LCIENEGA 66.00 ck=4	LCIENEGA 230.00-LCIENEGA 66.00 ck=3	SOCALIF	280 MVA	1.051	1.051	1.051	1.051	1.051	1.051	1.051	1.051
LUGO 500.00-LUGO 230.00 ck=1	INYO 115.00-INYO PS 115.00 ck=1	SOCALIF	56 MVA	2.09	1.032	1.032	1.032	1.034	2.089	2.089	1.033
LUGO 500.00-LUGO 230.00 ck=2	INYO 115.00-INYO PS 115.00 ck=1	SOCALIF	56 MVA	2.092	1.034	1.034	1.034	1.035	2.092	2.092	1.035
MAGUNDEN 230.00-OMAR 230.00 ck=1	VINCENT 230.00-ANTELOPE 230.00 ck=1	SOCALIF	1240 Amps	1.14	1.116	1.14	1.116	1.118	1.116	1.116	1.118
MIDPINTS 500.00-DEVERS 500.00 ck=1	DEVERS 500.00-IMPRLVLY 500.00 ck=1	SOCALIF	1600 Amps			1.046	1.055				
MNTVIEW 230.00-SANBRDNO 230.00 ck=1	MNTVIEW 230.00-SANBRDNO 230.00 ck=2	SOCALIF	2289 Amps	1.125	1.108	1.108	1.108	1.118	1.108	2.241	1.111
MNTVIEW 230.00-SANBRDNO 230.00 ck=2	MNTVIEW 230.00-SANBRDNO 230.00 ck=1	SOCALIF	2289 Amps	1.125	1.108	1.108	1.108	1.118	1.108	2.241	1.111
OWENSCON 230.00-INYO 230.00 ck=1	INYO 115.00-INYO PS 115.00 ck=1	SOCALIF	56 MVA	1.324	1.31	1.31	1.324	1.309	1.31	1.324	1.31
PALOVRDE 500.00-MIDPINTS 500.00 ck=1	DEVERS 500.00-IMPRLVLY 500.00 ck=1	SOCALIF	1600 Amps			1.059	1.069				
PALOVRDE 500.00-MIDPINTS 500.00 ck=1	MIDPINTS 500.00-BUCKPS2 161.00 ck=1	SOCALIF	625 MVA		1.119				1.02		
PASTORIA 230.00-PSTRIA 230.00 ck=1	VINCENT 230.00-ANTELOPE 230.00 ck=1	SOCALIF	1240 Amps	1.081	1.081	1.081	1.103	1.084	1.084	1.084	1.083
S.CLARA 230.00-S.CLARA 66.00 ck=2	S.CLARA 230.00-S.CLARA 66.00 ck=4	SOCALIF	280 MVA				1.113				
SERRANO 500.00-VALLEYSC 500.00 ck=1	DEVERS 230.00-SANBRDNO 230.00 ck=2A	SOCALIF	1150 Amps	1.052					1.052	1.051	
SERRANO 500.00-VALLEYSC 500.00 ck=1	DEVERS 230.00-VSTA 230.00 ck=2A	SOCALIF	1240 Amps	1.198	1.092	1.109	1.089	1.098	1.098	1.098	1.085
SERRANO 500.00-VALLEYSC 500.00 ck=1	SANBRDNO 230.00-DEVERS 230.00 ck=1A	SOCALIF	796 Amps	1.084					1.084	1.082	
SERRANO 500.00-VALLEYSC 500.00 ck=1	VSTA 230.00-DEVERS 230.00 ck=1A	SOCALIF	1150 Amps	2.441	1.165	1.165	1.165	1.171	1.171	1.171	1.157
TAP601 115.00-KRAMER 115.00 ck=1	INYO 115.00-INYO PS 115.00 ck=1	SOCALIF	56 MVA	1.001					1.001	1.001	
TAP701 115.00-INYOKERN 115.00 ck=1	INYO 115.00-INYO PS 115.00 ck=1	SOCALIF	56 MVA	2.214	1.096	2.2	1.097	1.097	1.097	1.097	1.097
TAP701 115.00-INYOKERN 115.00 ck=1	INYOKERN 115.00-KRAMER 115.00 ck=1	SOCALIF	830 Amps	2.014	1.01	2.019	1.009	1.009	1.009	1.009	1.01
TAP701 115.00-KRAMER 115.00 ck=1	INYO 115.00-INYO PS 115.00 ck=1	SOCALIF	56 MVA	2.195	1.087	2.182	1.087	1.087	1.087	1.087	1.087
VESTAL 230.00-VESTAL 66.00 ck=1	VESTAL 230.00-VESTAL 66.00 ck=2	SOCALIF	112 MVA	2.343	1.171	2.343	1.171	1.171	1.171	1.171	1.171
VESTAL 230.00-VESTAL 66.00 ck=2	VESTAL 230.00-VESTAL 66.00 ck=1	SOCALIF	111 MVA	2.362	1.181	2.362	1.181	1.181	1.181	1.181	1.181

Table 3
Summary Case Comparison's
Transmission Lines and Transformers Ovel loads

Contingency	Monitored Element	Area	Rating	3am	3bm	3cm	3d	4am	4bm	4cm	4dm
VICTOR 115.00-KRAMER 115.00 ck=1	INYO 115.00-INYO PS 115.00 ck=1	SOCALIF	56 MVA	1							
VICTOR 230.00-LUGO 230.00 ck=1	VICTOR 230.00-LUGO 230.00 ck=2	SOCALIF	1240 Amps	2.637	1.322	1.322	1.322	1.319	1.319	1.319	1.32
VICTOR 230.00-LUGO 230.00 ck=2	VICTOR 230.00-LUGO 230.00 ck=1	SOCALIF	1240 Amps	2.637	1.322	1.322	1.322	1.319	1.319	1.319	1.32
VSTA 230.00-SANBRDNO 230.00 ck=2	DEVERS 230.00-VSTA 230.00 ck=2A	SOCALIF	1240 Amps	1.026					1.02	1.025	
VSTA 230.00-SANBRDNO 230.00 ck=2	ETIWANDA 230.00-SANBRDNO 230.00 ck=1	SOCALIF	2001 Amps	1.16	1.102	1.16	1.16	1.116	1.16	1.16	1.105
VSTA 230.00-SANBRDNO 230.00 ck=2	VSTA 230.00-DEVERS 230.00 ck=1A	SOCALIF	1150 Amps	1.05	1.009	1.018	1.002	1.026	1.02	1.01	1.012

Table 3
Summary Case Comparison's
Transmission Lines and Transformers Ovel loads

Contingency	Monitored Element	Area	Rating	3am	3bm	3cm	3d	4am	4bm	4cm	4dm
BANISTER 161.00-CESUB 161.00 ck=1	MIDWAY 161.00-CESUB 161.00 ck=1	IMPERIALCA	592 Amps	1.004		1.007	1.007		1.002	1.006	
MIDWAY 161.00-CESUB 161.00 ck=1	BANISTER 161.00-CESUB 161.00 ck=1	IMPERIALCA	592 Amps	1.004		1.008	1.008		1.004	1.007	

Table 3
Summary Case Comparison's
Transmission Lines and Transformers Ovel loads

Contingency	Monitored Element	Area	Rating	3am	3bm	3cm	3d	4am	4bm	4cm	4dm
ALIS	NAVAJO 500.00-CRYSTAL 500.00 ck=1	ARIZONA	1630 Amps						1.227	1.043	1.227
ALIS	OCOTILLO 230.00-OCOTILLO 69.00 ck=1	ARIZONA	167 MVA	1.227	1.227	1.227	1.227	1.227	1.103	1.227	1.103
ALIS	PERKINS 500.00-PERK PS1 500.00 ck=1	ARIZONA	650 MVA	1.005	1.005	1.007	1.006	1.006	1.006	1.008	1.006
ALIS	PERKINS 500.00-PERK PS2 500.00 ck=1	ARIZONA	650 MVA	1.005	1.005	1.007	1.006	1.006	1.06	1.008	1.07
ALIS	SAG.EAST 115.00-SAG. CT3 13.80 ck=1	ARIZONA	70 MVA								
BLY500 500.00-DEVERS 500.00 ck=1	BLYTHE 161.00-BLYTHESC 161.00 ck=1	ARIZONA	875 Amps				1.152				
BLY500 500.00-DEVERS 500.00 ck=1	BLYTHE 161.00-HEADGATE 161.00 ck=1	ARIZONA	400 Amps			1.099	1.513			1.16	
BLY500 500.00-DEVERS 500.00 ck=1	BLYTHE 161.00-KNOB 161.00 ck=1	ARIZONA	400 Amps			1.39	1.79			1.39	
BLY500 500.00-DEVERS 500.00 ck=1	BLYTHE 161.00-NILAND 161.00 ck=1	ARIZONA	615 Amps			1.069	1.385			1.012	
BLY500 500.00-DEVERS 500.00 ck=1	PARKER 161.00-BLYTHE 161.00 ck=1	ARIZONA	602 Amps				1.076				
CAMINO 230.00-GENE 230.00 ck=1	PERKINPS 500.00-WESTWING 500.00 ck=1	ARIZONA	1430 Amps				1.294				
CAMINO 230.00-GENE 230.00 ck=1	PERKINS 500.00-PERK PS1 500.00 ck=1	ARIZONA	650 MVA				1.294				
CAMINO 230.00-GENE 230.00 ck=1	PERKINS 500.00-PERK PS2 500.00 ck=1	ARIZONA	650 MVA				1.294				
DAVIS 230.00-MEAD N 230.00 ck=1	PERKINPS 500.00-WESTWING 500.00 ck=1	ARIZONA	1430 Amps	1.003	1.003	1.003	1.004	1.004	1.004	1.004	1.003
DAVIS 230.00-MEAD N 230.00 ck=1	PERKINS 500.00-PERK PS1 500.00 ck=1	ARIZONA	650 MVA	1.017	1.018	1.018	1.017	1.017	1.017	1.017	1.018
DAVIS 230.00-MEAD N 230.00 ck=1	PERKINS 500.00-PERK PS2 500.00 ck=1	ARIZONA	650 MVA	1.017	1.018	1.018	1.017	1.017	1.017	1.017	1.018
DEVERS 500.00-DEVERS 230.00 ck=1	PERKINPS 500.00-WESTWING 500.00 ck=1	ARIZONA	1430 Amps	1.005	1.004		1.003	1.003	1.003	1.003	1.003
DEVERS 500.00-DEVERS 230.00 ck=1	PERKINS 500.00-PERK PS1 500.00 ck=1	ARIZONA	650 MVA	1.018	1.018		1.016	1.016	1.016	1.016	1.017
DEVERS 500.00-DEVERS 230.00 ck=1	PERKINS 500.00-PERK PS2 500.00 ck=1	ARIZONA	650 MVA	1.018	1.018		1.016	1.016	1.016	1.016	1.017
DEVERS 500.00-DEVERS 230.00 ck=2	PERKINPS 500.00-WESTWING 500.00 ck=1	ARIZONA	1430 Amps	1.005	1.004		1.003	1.003	1.003	1.003	1.003
DEVERS 500.00-DEVERS 230.00 ck=2	PERKINS 500.00-PERK PS1 500.00 ck=1	ARIZONA	650 MVA	1.018	1.018		1.016	1.016	1.016	1.016	1.017
DEVERS 500.00-DEVERS 230.00 ck=2	PERKINS 500.00-PERK PS2 500.00 ck=1	ARIZONA	650 MVA	1.018	1.018		1.016	1.016	1.016	1.016	1.017
DEVERS 500.00-VALLEYSC 500.00 ck=1	NAVAJO 500.00-CRYSTAL 500.00 ck=1	ARIZONA	1630 Amps	1.159	1.118	1.118	1.103	1.103	1.103	1.103	1.106
DEVERS 500.00-VALLEYSC 500.00 ck=1	PERKINPS 500.00-WESTWING 500.00 ck=1	ARIZONA	1430 Amps	1.24	1.219	1.219	1.216	1.216	1.216	1.216	1.215
DEVERS 500.00-VALLEYSC 500.00 ck=1	PERKINS 500.00-PERK PS1 500.00 ck=1	ARIZONA	650 MVA	1.243	1.225	1.225	1.22	1.22	1.22	1.22	1.221
DEVERS 500.00-VALLEYSC 500.00 ck=1	PERKINS 500.00-PERK PS2 500.00 ck=1	ARIZONA	650 MVA	1.243	1.225	1.225	1.22	1.22	1.22	1.22	1.221
H ALLEN 500.00-MEAD 500.00 ck=1	PERKINPS 500.00-WESTWING 500.00 ck=1	ARIZONA	1430 Amps	1.024	1.024	1.024	1.024	1.025	1.025	1.025	1.024
H ALLEN 500.00-MEAD 500.00 ck=1	PERKINS 500.00-PERK PS1 500.00 ck=1	ARIZONA	650 MVA	1.037	1.038	1.038	1.038	1.037	1.037	1.037	1.038
H ALLEN 500.00-MEAD 500.00 ck=1	PERKINS 500.00-PERK PS2 500.00 ck=1	ARIZONA	650 MVA	1.037	1.038	1.038	1.038	1.037	1.037	1.037	1.038
HARQUAHA 500.00-DEVERS 500.00 ck=1	NAVAJO 500.00-CRYSTAL 500.00 ck=1	ARIZONA	1630 Amps	1.059	1.035			1.023	1.023	1.023	1.025
HARQUAHA 500.00-DEVERS 500.00 ck=1	PERKINPS 500.00-WESTWING 500.00 ck=1	ARIZONA	1430 Amps	1.089	1.093			1.097	1.097	1.097	1.092
HARQUAHA 500.00-DEVERS 500.00 ck=1	PERKINS 500.00-PERK PS1 500.00 ck=1	ARIZONA	650 MVA	1.1	1.105			1.107	1.107	1.107	1.104
HARQUAHA 500.00-DEVERS 500.00 ck=1	PERKINS 500.00-PERK PS2 500.00 ck=1	ARIZONA	650 MVA	1.1	1.105			1.107	1.107	1.107	1.104
HIDESERT 230.00-VICTOR 230.00 ck=1	PERKINPS 500.00-WESTWING 500.00 ck=1	ARIZONA	1430 Amps	1.004	1.004	1.004	1.004	1.005	1.005	1.005	1.004
HIDESERT 230.00-VICTOR 230.00 ck=1	PERKINS 500.00-PERK PS1 500.00 ck=1	ARIZONA	650 MVA	1.018	1.02	1.02	1.02	1.019	1.019	1.019	1.019
HIDESERT 230.00-VICTOR 230.00 ck=1	PERKINS 500.00-PERK PS2 500.00 ck=1	ARIZONA	650 MVA	1.018	1.02	1.02	2.044	1.019	1.019	1.019	1.019
MEAD 345.00-MEAD N 230.00 ck=1	NAVAJO 500.00-CRYSTAL 500.00 ck=1	ARIZONA	1630 Amps	1.019		2.155					
MEAD 345.00-MEAD N 230.00 ck=1	PERKINPS 500.00-WESTWING 500.00 ck=1	ARIZONA	1430 Amps	1.024	1.023	1.023	1.023	1.023	1.023	1.023	1.023
MEAD 345.00-MEAD N 230.00 ck=1	PERKINS 500.00-PERK PS1 500.00 ck=1	ARIZONA	650 MVA	1.038	1.038	1.038	1.038	1.036	1.038	1.038	1.038
MEAD 345.00-MEAD N 230.00 ck=1	PERKINS 500.00-PERK PS2 500.00 ck=1	ARIZONA	650 MVA	1.038	1.038	1.038	1.038	1.036	1.038	1.038	1.038
MEAD 500.00-MARKETPL 500.00 ck=1	NAVAJO 500.00-CRYSTAL 500.00 ck=1	ARIZONA	1630 Amps	1.041	1.013	1.013	1.013	1	1.013	1.013	1.004
MEAD 500.00-PERKINS 500.00 ck=1	MOENKOPI 500.00-ELDORDO 500.00 ck=1	ARIZONA	1900 Amps			2.05					
MEAD 500.00-PERKINS 500.00 ck=1	NAVAJO 500.00-CRYSTAL 500.00 ck=1	ARIZONA	1630 Amps	1.213	1.185	1.25	1.185	1.172	1.185	1.185	1.176
MIDPINTS 500.00-DEVERS 500.00 ck=1	HASSYAMP 500.00-N.GILA 500.00 ck=1	ARIZONA	2200 Amps			1.357	2.692				
MIDPINTS 500.00-DEVERS 500.00 ck=1	NAVAJO 500.00-CRYSTAL 500.00 ck=1	ARIZONA	1630 Amps	1.065	1.04	1.04	1.04	1.018	1.018	1.018	1.037
MIDPINTS 500.00-DEVERS 500.00 ck=1	PERKINPS 500.00-WESTWING 500.00 ck=1	ARIZONA	1430 Amps	1.096	1.1	1.1	1.1	1.086	1.086	1.086	1.11
MIDPINTS 500.00-DEVERS 500.00 ck=1	PERKINS 500.00-PERK PS1 500.00 ck=1	ARIZONA	650 MVA	1.107	1.112	1.112	1.112	1.096	1.096	1.096	1.122

Table 3
Summary Case Comparison's
Transmission Lines and Transformers Ovel loads

Contingency	Monitored Element	Area	Rating	3am	3bm	3cm	3d	4am	4bm	4cm	4dm
MIDPINTS 500.00-DEVERS 500.00 ck=1	PERKINS 500.00-PERK PS2 500.00 ck=1	ARIZONA	650 MVA	1.107	1.112	1.112	1.112	1.096	1.096	1.096	1.122
MOENKOPI 500.00-ELDORDO 500.00 ck=1	NAVAJO 500.00-CRYSTAL 500.00 ck=1	ARIZONA	1630 Amps	1.498	1.456	1.456	1.498	1.434	1.456	1.498	1.441
MOENKOPI 500.00-ELDORDO 500.00 ck=1	PERKINPS 500.00-WESTWING 500.00 ck=1	ARIZONA	1430 Amps	1.183	1.176	1.176	1.183	1.173	1.176	1.183	1.173
MOENKOPI 500.00-ELDORDO 500.00 ck=1	PERKINS 500.00-PERK PS1 500.00 ck=1	ARIZONA	650 MVA	1.195	1.189	1.189	1.195	1.184	1.189	1.195	1.186
MOENKOPI 500.00-ELDORDO 500.00 ck=1	PERKINS 500.00-PERK PS2 500.00 ck=1	ARIZONA	650 MVA	1.195	1.189	1.189	1.195	1.184	1.189	1.195	1.186
PALOVRDE 500.00-MIDPINTS 500.00 ck=1	HASSYAMP 500.00-N.GILA 500.00 ck=1	ARIZONA	2200 Amps			1.059	1.059				
PALOVRDE 500.00-MIDPINTS 500.00 ck=1	NAVAJO 500.00-CRYSTAL 500.00 ck=1	ARIZONA	1630 Amps	1.061	1.037	1.037	1.037	1.037	1.037	1.037	1.034
PALOVRDE 500.00-MIDPINTS 500.00 ck=1	PERKINPS 500.00-WESTWING 500.00 ck=1	ARIZONA	1430 Amps	1.092	1.096	1.096	1.103	1.103	1.103	1.103	1.107
PALOVRDE 500.00-MIDPINTS 500.00 ck=1	PERKINS 500.00-PERK PS1 500.00 ck=1	ARIZONA	650 MVA	1.102	1.108	2.5	1.113	1.113	1.113	1.113	1.118
PALOVRDE 500.00-MIDPINTS 500.00 ck=1	PERKINS 500.00-PERK PS2 500.00 ck=1	ARIZONA	650 MVA	1.102	1.108	2.5	1.113	1.113	1.113	1.113	1.118
PARKER 230.00-GENE 230.00 ck=1	PERKINPS 500.00-WESTWING 500.00 ck=1	ARIZONA	1430 Amps				1.103				
PARKER 230.00-GENE 230.00 ck=1	PERKINS 500.00-PERK PS1 500.00 ck=1	ARIZONA	650 MVA				1.113				
PARKER 230.00-GENE 230.00 ck=1	PERKINS 500.00-PERK PS2 500.00 ck=1	ARIZONA	650 MVA				1.113				
PEACOCK 345.00-MEAD 345.00 ck=1	NAVAJO 500.00-CRYSTAL 500.00 ck=1	ARIZONA	1630 Amps				1.113		1.02	1.02	
PEACOCK 345.00-MEAD 345.00 ck=1	PERKINPS 500.00-WESTWING 500.00 ck=1	ARIZONA	1430 Amps	1.023	1.023	1.023	1.113	1.023	1.023	1.023	1.023
PEACOCK 345.00-MEAD 345.00 ck=1	PERKINS 500.00-PERK PS1 500.00 ck=1	ARIZONA	650 MVA	1.037	1.037	1.037	1.103	1.035	1.035	1.035	1.037
PEACOCK 345.00-MEAD 345.00 ck=1	PERKINS 500.00-PERK PS2 500.00 ck=1	ARIZONA	650 MVA	1.037	1.037	1.037	1.113	1.035	1.035	1.035	1.037
PEACOCK 345.00-PEACOCK 230.00 ck=1	PERKINPS 500.00-WESTWING 500.00 ck=1	ARIZONA	1430 Amps			1.004	1.113				
PEACOCK 345.00-PEACOCK 230.00 ck=1	PERKINS 500.00-PERK PS1 500.00 ck=1	ARIZONA	650 MVA			1.015	1.103				
PEACOCK 345.00-PEACOCK 230.00 ck=1	PERKINS 500.00-PERK PS2 500.00 ck=1	ARIZONA	650 MVA			1.015	1.113				
SERRANO 500.00-VALLEYSC 500.00 ck=1	NAVAJO 500.00-CRYSTAL 500.00 ck=1	ARIZONA	1630 Amps	1.094	1.056	1.323	1.094	1.042	1.042	1.042	1.045
SERRANO 500.00-VALLEYSC 500.00 ck=1	PERKINPS 500.00-WESTWING 500.00 ck=1	ARIZONA	1430 Amps	1.141	1.123	1.094	1.141	1.123	1.123	1.123	1.121
SERRANO 500.00-VALLEYSC 500.00 ck=1	PERKINS 500.00-PERK PS1 500.00 ck=1	ARIZONA	650 MVA	1.15	1.134	1.141	1.15	1.132	1.132	1.132	1.132
SERRANO 500.00-VALLEYSC 500.00 ck=1	PERKINS 500.00-PERK PS2 500.00 ck=1	ARIZONA	650 MVA	1.15	1.134	1.15	1.15	1.132	1.132	1.132	1.132
VSTA 230.00-SANBRDNO 230.00 ck=2	PERKINPS 500.00-WESTWING 500.00 ck=1	ARIZONA	1430 Amps	1.002	1.002			1.003	1.003	1.003	1.001
VSTA 230.00-SANBRDNO 230.00 ck=2	PERKINS 500.00-PERK PS1 500.00 ck=1	ARIZONA	650 MVA	1.018					1.014	1.014	
VSTA 230.00-SANBRDNO 230.00 ck=2	PERKINS 500.00-PERK PS2 500.00 ck=1	ARIZONA	650 MVA	1.018					1.014	1.014	

Power Flow Plots Case 4

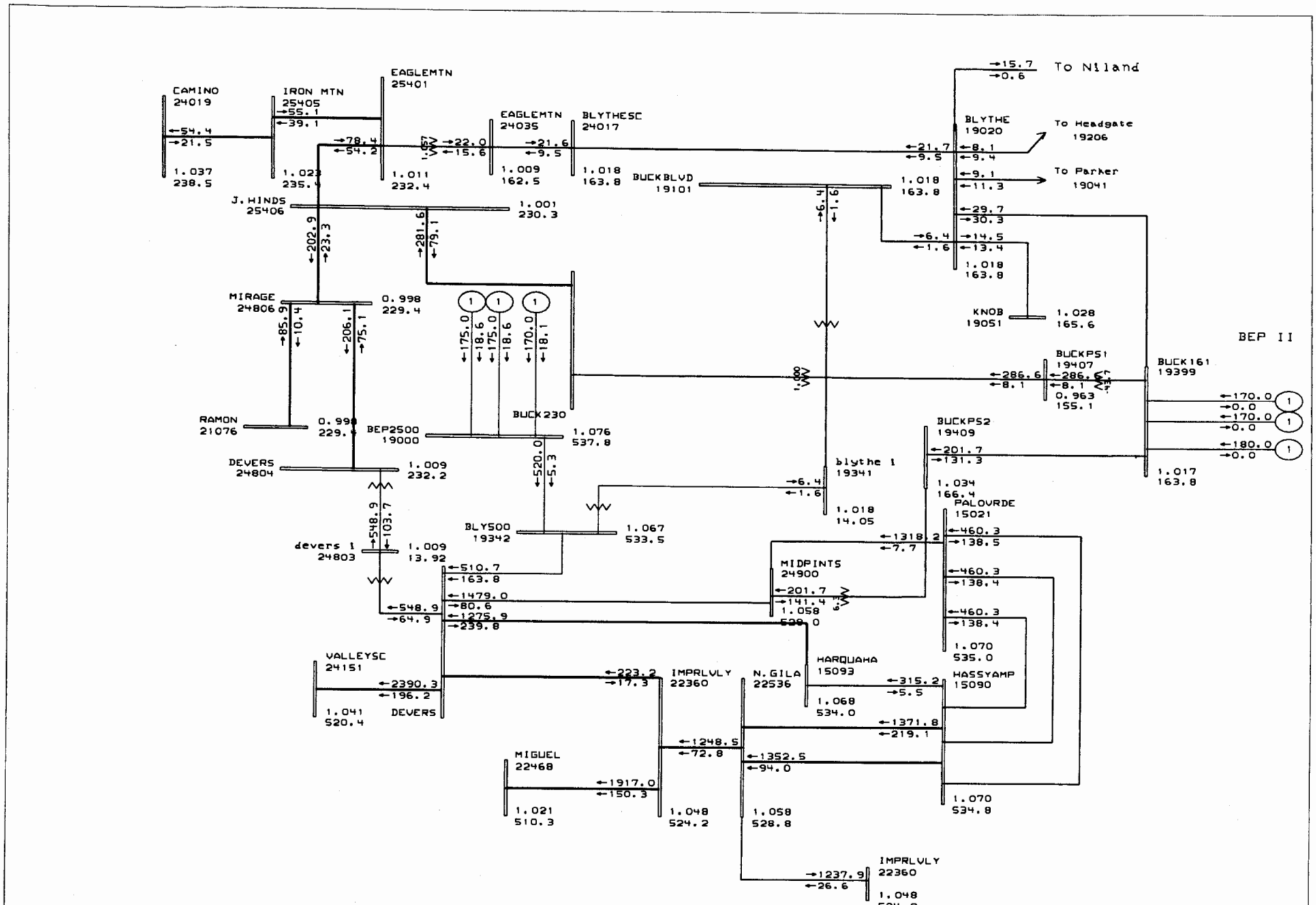

General Electric International, Inc. PSLF Program

GENERAL ELECTRIC COMPANY

[PDCI 971MW][MARKETPLACE - ADELANTO 974MW][Path 15 2516MW][BORAH W 1728MW]
[WESTSIDE LOAD10728MW][TOT 2 261MW][KLAMATH FALLS COGEN 484MW][N JOHNDAY 3707

[NW-CANADA -370MW][IDAHO-NW 442MW][BRIDGER W 1738MW][S LUGO 2645MW]
[UC GEN 6247MW][WOR 8896MW][EOR 7896MW][PP DC 1853MW][PATH 26 -587

MW/MVAR

Tue Jun 28 10:27:33 2005

I:\test3\d-bepii\case11.drw
I:\test3\d-bepii\4_am.sav
Rating = 1

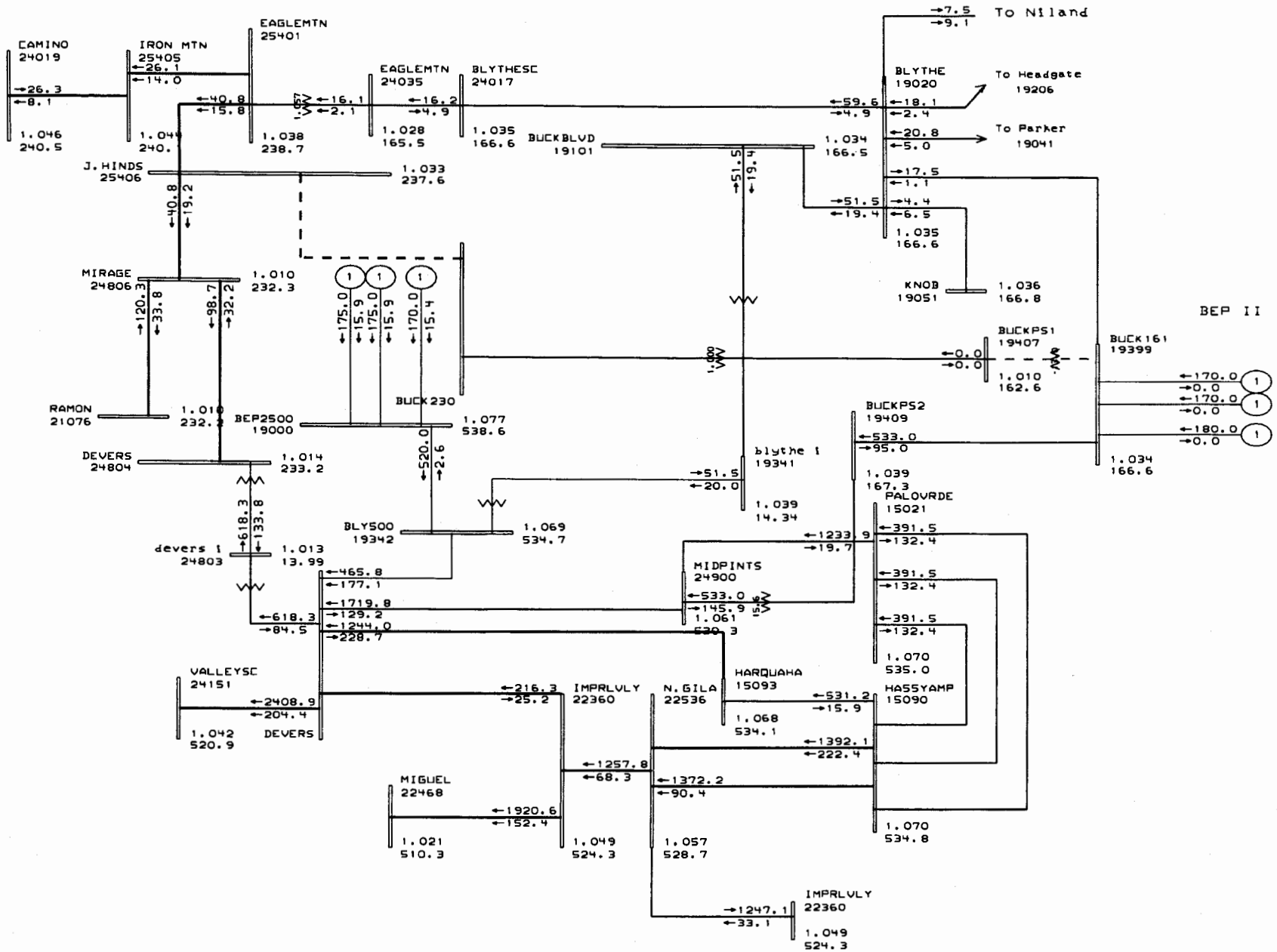

General Electric International, Inc. PSLF Program MW/MVAR Tue Jun 28 10:28:21 2005

GENERAL ELECTRIC COMPANY

[PDCI 971MW][MARKETPLACE - ADELANTO 974MW][Path 15 2516MW][BORAH W 1728MW] [WESTSIDE LOAD10728MW][TOT 2 261MW][KLAMATH FALLS COGEN 484MW][N JOHNDAY 3707

[NW-CANADA -370MW][IDAHO-NW 442MW][BRIDGER W 1738MW][S LUGO 2645MW] [UC GEN 6247MW][WOR 8896MW][EOR 7896MW][IPP DC 1853MW][PATH 26 -587

I:\test3\d-bepii\case11.drw
I:\test3\d-bepii\4_bm.sav
Rating = 1

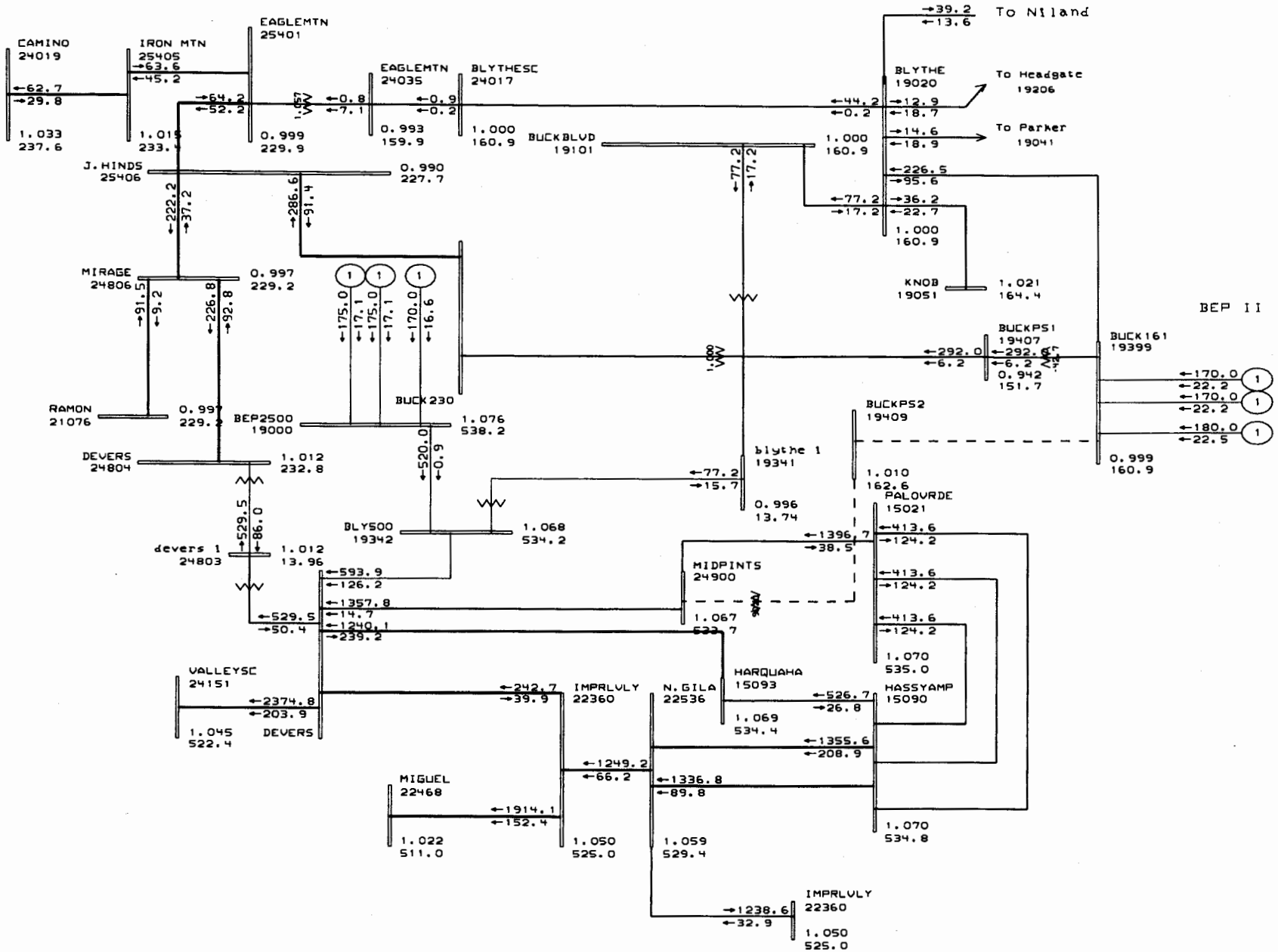

General Electric International, Inc. PSLF Program

MW/MVAR

Tue Jun 28 10:29:22 2005

GENERAL ELECTRIC COMPANY

[PDCI 971MW][MARKETPLACE - ADELANTO 974MW][Path 15 2516MW][BORAH W 1728MW]
[WESTSIDE LOAD10728MW][TOT 2 261MW][KLAMATH FALLS COGEN 484MW][N JOHNDAY 3707

[NW-CANADA -370MW][IDAHO-NW 442MW][BRIDGER W 1738MW][S LUGO 2645MW]
[UC GEN 6247MW][WOR 8896MW][EOR 7896MW][IPP DC 1853MW][PATH 26 -587

I:\test3\d-bepii\case11.drw
I:\test3\d-bepii\4_cm.sav
Rating = 1

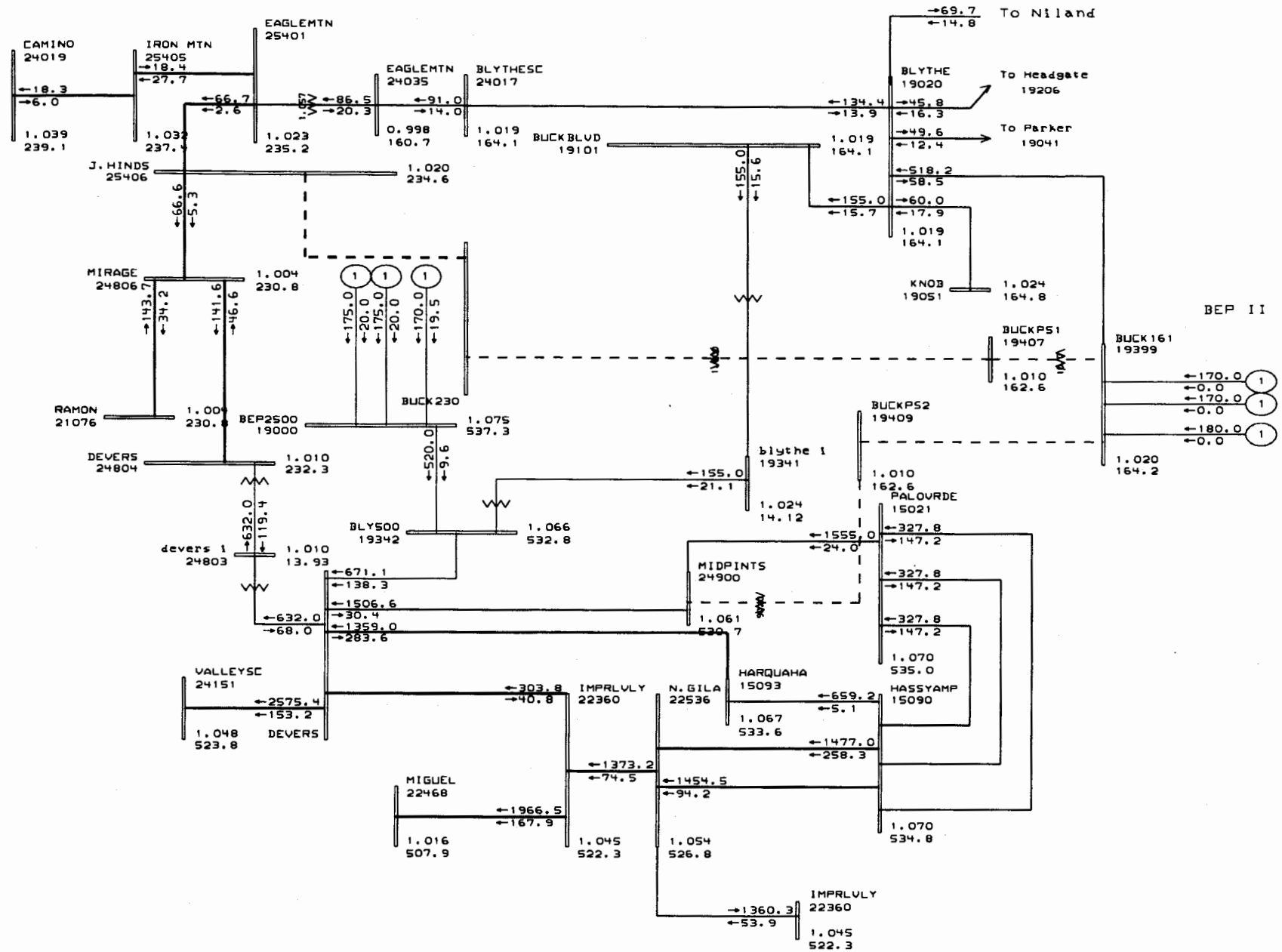

General Electric International, Inc. PSLF Program

MW/MVAR Tue Jun 28 10:30:28 2005

GENERAL ELECTRIC COMPANY

[PDCI 971MW][MARKETPLACE - ADELANTO 974MW][Path 15 2516MW][BORAH W 1728MW]
[WESTSIDE LOAD10728MW][TOT 2 261MW][KLAMATH FALLS COGEN 484MW][N JOHNDAY 3707

[NW-CANADA -370MW][IDAHO-NW 442MW][BRIDGER W 1738MW][S LUGO 2645MW]
[UC GEN 6247MW][WOR 8896MW][EOR 7896MW][IPP DC 1853MW][PATH 26 -587

I:\test3\d-bepii\case11.drw
I:\test3\d-bepii\4_dm.sav
Rating = 1

Table 4
Lines and Transformer Over Loads Report
w/o PVD2 "Case 1"

Case	Monitored Busname from-Busname to - circuit	Area	Contingency Busname from-Busname to-Circui	Con. #	Measured
1_a	HAVASU12 13.20-HAVASU 230.00 ck=1	WAPA L.C.	BLY500 500.00-DEVERS 500.00 ck=1	3	1.049
1_a	HAVASU34 13.20-HAVASU 230.00 ck=1	WAPA L.C.	BLY500 500.00-DEVERS 500.00 ck=1	3	1.049
1_a	HAVASU56 13.20-HAVASU 230.00 ck=1	WAPA L.C.	BLY500 500.00-DEVERS 500.00 ck=1	3	1.049
1_a	MEAD 500.00-PERKINS 500.00 ck=1	WAPA L.C.	H ALLEN 500.00-MEAD 500.00 ck=1	15	1.032
1_a	MEAD 500.00-PERKINS 500.00 ck=1	WAPA L.C.	DAVIS 230.00-MEAD N 230.00 ck=1	30	1.008
1_a	MEAD 500.00-PERKINS 500.00 ck=1	WAPA L.C.	HOVRA5A6 230.00-MEAD S 230.00 ck=1	33	1.006
1_a	MEAD 500.00-PERKINS 500.00 ck=1	WAPA L.C.	HOVRA7-9 230.00-MEAD S 230.00 ck=1	34	1.006
1_a	MEAD 500.00-PERKINS 500.00 ck=1	WAPA L.C.	PARKER 230.00-HAVASU 230.00 ck=1	38	1.008
1_a	MEAD 500.00-PERKINS 500.00 ck=1	WAPA L.C.	LIBERTY 345.00-PEACOCK 345.00 ck=1	51	1.069
1_a	MEAD 500.00-PERKINS 500.00 ck=1	WAPA L.C.	HOVRN7N8 230.00-MEAD S 230.00 ck=1	59	1.007
1_a	MEAD 500.00-PERKINS 500.00 ck=1	WAPA L.C.	HOVRN5N6 230.00-MEAD S 230.00 ck=1	60	1.007
1_a	MEAD 500.00-PERKINS 500.00 ck=1	WAPA L.C.	HOVRN3N4 230.00-MEAD S 230.00 ck=1	61	1.007
1_a	MEAD 500.00-PERKINS 500.00 ck=1	WAPA L.C.	HOVRN1N2 230.00-MEAD S 230.00 ck=1	62	1.006
1_a	MEAD 500.00-PERKINS 500.00 ck=1	WAPA L.C.	HOVRA1A2 230.00-MEAD S 230.00 ck=1	63	1.007
1_a	MEAD 500.00-PERKINS 500.00 ck=1	WAPA L.C.	PEACOCK 345.00-MEAD 345.00 ck=1	73	1.061
1_a	HAVASU12 13.20-HAVASU 230.00 ck=1	WAPA L.C.	TOPOCK 230.00-BLK MESA 230.00 ck=1	74	1.049
1_a	HAVASU34 13.20-HAVASU 230.00 ck=1	WAPA L.C.	TOPOCK 230.00-BLK MESA 230.00 ck=1	74	1.049
1_a	HAVASU56 13.20-HAVASU 230.00 ck=1	WAPA L.C.	TOPOCK 230.00-BLK MESA 230.00 ck=1	74	1.049
1_a	MEAD 500.00-PERKINS 500.00 ck=1	WAPA L.C.	SIGURDPS 230.00-GLENCANY 230.00 ck=1	79	1.006
1_a	FLAGSTAF 345.00-GLENCANY 345.00 ck=2	WAPA L.C.	FLAGSTAF 345.00-GLENCANY 345.00 ck=1	80	1.152
1_a	FLAGSTAF 345.00-GLENCANY 345.00 ck=1	WAPA L.C.	FLAGSTAF 345.00-GLENCANY 345.00 ck=2	81	1.155
1_a	FLAGSTAF 345.00-PINPKBRB 345.00 ck=2	WAPA L.C.	FLAGSTAF 345.00-PINPKBRB 345.00 ck=1	82	1.127
1_a	FLAGSTAF 345.00-PINPKBRB 345.00 ck=1	WAPA L.C.	FLAGSTAF 345.00-PINPKBRB 345.00 ck=2	83	1.128
1_a	LIBERTY 345.00-PEACOCK 345.00 ck=1	WAPA L.C.	MEAD 500.00-PERKINS 500.00 ck=1	272	1.07
1_a	MEAD 500.00-PERKINS 500.00 ck=1	WAPA L.C.	SERRANO 500.00-VALLEYSC 500.00 ck=1	390	1.087
1_a	MEAD 500.00-PERKINS 500.00 ck=1	WAPA L.C.	DEVERS 500.00-VALLEYSC 500.00 ck=1	601	1.186
1_a	MEAD 500.00-PERKINS 500.00 ck=1	WAPA L.C.	DEVERS 230.00-OAK_VLLY 230.00 ck=1	603	1.005
1_a	MEAD 500.00-PERKINS 500.00 ck=1	WAPA L.C.	DEVERS 230.00-VSTA 230.00 ck=2	605	1.006
1_a	MEAD 500.00-PERKINS 500.00 ck=1	WAPA L.C.	VSTA 230.00-DEVERS 230.00 ck=1	643	1.006
1_a	MEAD 500.00-PERKINS 500.00 ck=1	WAPA L.C.	MOENKOPI 500.00-ELDORDO 500.00 ck=1	705	1.176
1_a	MEAD 500.00-PERKINS 500.00 ck=1	WAPA L.C.	HOVRA3A4 230.00-MEAD N 230.00 ck=1	730	1.008
1_a	HAVASU12 13.20-HAVASU 230.00 ck=1	WAPA L.C.	TOPOCK 230.00-N.HAVASU 230.00 ck=1	733	1.044
1_a	HAVASU34 13.20-HAVASU 230.00 ck=1	WAPA L.C.	TOPOCK 230.00-N.HAVASU 230.00 ck=1	733	1.044
1_a	HAVASU56 13.20-HAVASU 230.00 ck=1	WAPA L.C.	TOPOCK 230.00-N.HAVASU 230.00 ck=1	733	1.044

Table 4
Lines and Transformer Over Loads Report
w/o PVD2 "Case 1"

1_a	MEAD 500.00-PERKINS 500.00 ck=1	WAPA L.C.	BUCK230 230.00-J.HINDS 230.00 ck=1	734	1.016
1_a	LIBERTY 345.00-PEACOCK 345.00 ck=1	WAPA L.C.	PALOVRDE 500.00-MIDPOINX 500.00 ck=1	748	1.139
1_a	MEAD 500.00-PERKINS 500.00 ck=1	WAPA L.C.	PALOVRDE 500.00-MIDPOINX 500.00 ck=1	748	1.427
1_a	HAVASU12 13.20-HAVASU 230.00 ck=1	WAPA L.C.	PALOVRDE 500.00-MIDPOINX 500.00 ck=1	748	1.071
1_a	HAVASU34 13.20-HAVASU 230.00 ck=1	WAPA L.C.	PALOVRDE 500.00-MIDPOINX 500.00 ck=1	748	1.071
1_a	HAVASU56 13.20-HAVASU 230.00 ck=1	WAPA L.C.	PALOVRDE 500.00-MIDPOINX 500.00 ck=1	748	1.071
1_a	LIBERTY 345.00-PEACOCK 345.00 ck=1	WAPA L.C.	MIDPOINX 500.00-DEVERS 500.00 ck=1	749	1.105
1_a	MEAD 500.00-PERKINS 500.00 ck=1	WAPA L.C.	MIDPOINX 500.00-DEVERS 500.00 ck=1	749	1.389
1_a	HAVASU12 13.20-HAVASU 230.00 ck=1	WAPA L.C.	MIDPOINX 500.00-DEVERS 500.00 ck=1	749	1.062
1_a	HAVASU34 13.20-HAVASU 230.00 ck=1	WAPA L.C.	MIDPOINX 500.00-DEVERS 500.00 ck=1	749	1.062
1_a	HAVASU56 13.20-HAVASU 230.00 ck=1	WAPA L.C.	MIDPOINX 500.00-DEVERS 500.00 ck=1	749	1.062
1_a	MEAD 500.00-PERKINS 500.00 ck=1	WAPA L.C.	HOVRA1A2 16.50-HOVRA1A2 230.00 ck=1	768	1.007
1_a	MEAD 500.00-PERKINS 500.00 ck=1	WAPA L.C.	HOVRN1N2 16.50-HOVRN1N2 230.00 ck=1	770	1.006
1_a	MEAD 500.00-PERKINS 500.00 ck=1	WAPA L.C.	HOVRN3N4 16.50-HOVRN3N4 230.00 ck=1	771	1.007
1_a	MEAD 500.00-PERKINS 500.00 ck=1	WAPA L.C.	HOVRN5N6 16.50-HOVRN5N6 230.00 ck=1	772	1.007
1_a	MEAD 500.00-PERKINS 500.00 ck=1	WAPA L.C.	HOVRN7N8 16.50-HOVRN7N8 230.00 ck=1	773	1.007
1_a	MEAD 500.00-PERKINS 500.00 ck=1	WAPA L.C.	MEAD 345.00-MEAD N 230.00 ck=1	774	1.061
1_a	MEAD 500.00-PERKINS 500.00 ck=1	WAPA L.C.	LIBERTY 345.00-LIBTYPHS 230.00 ck=1	780	1.069
1_a	MEAD 500.00-PERKINS 500.00 ck=1	WAPA L.C.	LIBTYPHS 230.00-LIBERTY 230.00 ck=1	781	1.069
1_a	MEAD 500.00-PERKINS 500.00 ck=1	WAPA L.C.	DEVERS 500.00-DEVERS 230.00 ck=1	1189	1.006
1_a	MEAD 500.00-PERKINS 500.00 ck=1	WAPA L.C.	DEVERS 500.00-DEVERS 230.00 ck=2	1290	1.006
1_b	MIDPXPST 230.00-BUCKPST2 230.00 ck=1	WAPA L.C.	BLY500 500.00-DEVERS 500.00 ck=1	3	1.042
1_b	HAVASU12 13.20-HAVASU 230.00 ck=1	WAPA L.C.	BLY500 500.00-DEVERS 500.00 ck=1	3	1.048
1_b	HAVASU34 13.20-HAVASU 230.00 ck=1	WAPA L.C.	BLY500 500.00-DEVERS 500.00 ck=1	3	1.048
1_b	HAVASU56 13.20-HAVASU 230.00 ck=1	WAPA L.C.	BLY500 500.00-DEVERS 500.00 ck=1	3	1.048
1_b	MEAD 500.00-PERKINS 500.00 ck=1	WAPA L.C.	H ALLEN 500.00-MEAD 500.00 ck=1	15	1.034
1_b	MEAD 500.00-PERKINS 500.00 ck=1	WAPA L.C.	DAVIS 230.00-MEAD N 230.00 ck=1	30	1.008
1_b	MEAD 500.00-PERKINS 500.00 ck=1	WAPA L.C.	HOVRA5A6 230.00-MEAD S 230.00 ck=1	33	1.007
1_b	MEAD 500.00-PERKINS 500.00 ck=1	WAPA L.C.	HOVRA7-9 230.00-MEAD S 230.00 ck=1	34	1.008
1_b	MEAD 500.00-PERKINS 500.00 ck=1	WAPA L.C.	PARKER 230.00-HAVASU 230.00 ck=1	38	1.009
1_b	MEAD 500.00-PERKINS 500.00 ck=1	WAPA L.C.	LIBERTY 345.00-PEACOCK 345.00 ck=1	51	1.07
1_b	MEAD 500.00-PERKINS 500.00 ck=1	WAPA L.C.	HOVRN7N8 230.00-MEAD S 230.00 ck=1	59	1.009
1_b	MEAD 500.00-PERKINS 500.00 ck=1	WAPA L.C.	HOVRN5N6 230.00-MEAD S 230.00 ck=1	60	1.009
1_b	MEAD 500.00-PERKINS 500.00 ck=1	WAPA L.C.	HOVRN3N4 230.00-MEAD S 230.00 ck=1	61	1.009
1_b	MEAD 500.00-PERKINS 500.00 ck=1	WAPA L.C.	HOVRN1N2 230.00-MEAD S 230.00 ck=1	62	1.007
1_b	MEAD 500.00-PERKINS 500.00 ck=1	WAPA L.C.	HOVRA1A2 230.00-MEAD S 230.00 ck=1	63	1.008
1_b	MEAD 500.00-PERKINS 500.00 ck=1	WAPA L.C.	PEACOCK 345.00-MEAD 345.00 ck=1	73	1.063

Table 4
Lines and Transformer Over Loads Report
w/o PVD2 "Case 1"

1_b	HAVASU12 13.20-HAVASU 230.00 ck=1	WAPA L.C.	TOPOCK 230.00-BLK MESA 230.00 ck=1	74	1.05
1_b	HAVASU34 13.20-HAVASU 230.00 ck=1	WAPA L.C.	TOPOCK 230.00-BLK MESA 230.00 ck=1	74	1.05
1_b	HAVASU56 13.20-HAVASU 230.00 ck=1	WAPA L.C.	TOPOCK 230.00-BLK MESA 230.00 ck=1	74	1.05
1_b	MEAD 500.00-PERKINS 500.00 ck=1	WAPA L.C.	SIGURDPS 230.00-GLENCANY 230.00 ck=1	79	1.007
1_b	FLAGSTAF 345.00-GLENCANY 345.00 ck=2	WAPA L.C.	FLAGSTAF 345.00-GLENCANY 345.00 ck=1	80	1.147
1_b	FLAGSTAF 345.00-GLENCANY 345.00 ck=1	WAPA L.C.	FLAGSTAF 345.00-GLENCANY 345.00 ck=2	81	1.15
1_b	FLAGSTAF 345.00-PINPKBRB 345.00 ck=2	WAPA L.C.	FLAGSTAF 345.00-PINPKBRB 345.00 ck=1	82	1.123
1_b	FLAGSTAF 345.00-PINPKBRB 345.00 ck=1	WAPA L.C.	FLAGSTAF 345.00-PINPKBRB 345.00 ck=2	83	1.123
1_b	LIBERTY 345.00-PEACOCK 345.00 ck=1	WAPA L.C.	MEAD 500.00-PERKINS 500.00 ck=1	272	1.072
1_b	MEAD 500.00-PERKINS 500.00 ck=1	WAPA L.C.	SERRANO 500.00-VALLEYSC 500.00 ck=1	390	1.092
1_b	MEAD 500.00-PERKINS 500.00 ck=1	WAPA L.C.	DEVERS 500.00-VALLEYSC 500.00 ck=1	601	1.192
1_b	MEAD 500.00-PERKINS 500.00 ck=1	WAPA L.C.	DEVERS 230.00-OAK_VLLY 230.00 ck=1	603	1.006
1_b	MEAD 500.00-PERKINS 500.00 ck=1	WAPA L.C.	DEVERS 230.00-VSTA 230.00 ck=2	605	1.007
1_b	MEAD 500.00-PERKINS 500.00 ck=1	WAPA L.C.	VSTA 230.00-DEVERS 230.00 ck=1	643	1.007
1_b	MEAD 500.00-PERKINS 500.00 ck=1	WAPA L.C.	MOENKOPI 500.00-ELDORDO 500.00 ck=1	705	1.183
1_b	MEAD 500.00-PERKINS 500.00 ck=1	WAPA L.C.	HOVRA3A4 230.00-MEAD N 230.00 ck=1	730	1.009
1_b	HAVASU12 13.20-HAVASU 230.00 ck=1	WAPA L.C.	TOPOCK 230.00-N.HAVASU 230.00 ck=1	733	1.044
1_b	HAVASU34 13.20-HAVASU 230.00 ck=1	WAPA L.C.	TOPOCK 230.00-N.HAVASU 230.00 ck=1	733	1.044
1_b	HAVASU56 13.20-HAVASU 230.00 ck=1	WAPA L.C.	TOPOCK 230.00-N.HAVASU 230.00 ck=1	733	1.044
1_b	LIBERTY 345.00-PEACOCK 345.00 ck=1	WAPA L.C.	PALOVRDE 500.00-MIDPOINX 500.00 ck=1	748	1.125
1_b	MEAD 500.00-PERKINS 500.00 ck=1	WAPA L.C.	PALOVRDE 500.00-MIDPOINX 500.00 ck=1	748	1.405
1_b	MIDPXPST 230.00-BUCKPST2 230.00 ck=1	WAPA L.C.	PALOVRDE 500.00-MIDPOINX 500.00 ck=1	748	1.081
1_b	HAVASU12 13.20-HAVASU 230.00 ck=1	WAPA L.C.	PALOVRDE 500.00-MIDPOINX 500.00 ck=1	748	1.077
1_b	HAVASU34 13.20-HAVASU 230.00 ck=1	WAPA L.C.	PALOVRDE 500.00-MIDPOINX 500.00 ck=1	748	1.077
1_b	HAVASU56 13.20-HAVASU 230.00 ck=1	WAPA L.C.	PALOVRDE 500.00-MIDPOINX 500.00 ck=1	748	1.077
1_b	LIBERTY 345.00-PEACOCK 345.00 ck=1	WAPA L.C.	MIDPOINX 500.00-DEVERS 500.00 ck=1	749	1.152
1_b	MEAD 500.00-PERKINS 500.00 ck=1	WAPA L.C.	MIDPOINX 500.00-DEVERS 500.00 ck=1	749	1.471
1_b	HAVASU12 13.20-HAVASU 230.00 ck=1	WAPA L.C.	MIDPOINX 500.00-DEVERS 500.00 ck=1	749	1.075
1_b	HAVASU34 13.20-HAVASU 230.00 ck=1	WAPA L.C.	MIDPOINX 500.00-DEVERS 500.00 ck=1	749	1.075
1_b	HAVASU56 13.20-HAVASU 230.00 ck=1	WAPA L.C.	MIDPOINX 500.00-DEVERS 500.00 ck=1	749	1.075
1_b	MEAD 500.00-PERKINS 500.00 ck=1	WAPA L.C.	HOVRA1A2 16.50-HOVRA1A2 230.00 ck=1	768	1.008
1_b	MEAD 500.00-PERKINS 500.00 ck=1	WAPA L.C.	HOVRN1N2 16.50-HOVRN1N2 230.00 ck=1	770	1.007
1_b	MEAD 500.00-PERKINS 500.00 ck=1	WAPA L.C.	HOVRN3N4 16.50-HOVRN3N4 230.00 ck=1	771	1.009
1_b	MEAD 500.00-PERKINS 500.00 ck=1	WAPA L.C.	HOVRN5N6 16.50-HOVRN5N6 230.00 ck=1	772	1.009
1_b	MEAD 500.00-PERKINS 500.00 ck=1	WAPA L.C.	HOVRN7N8 16.50-HOVRN7N8 230.00 ck=1	773	1.009
1_b	MEAD 500.00-PERKINS 500.00 ck=1	WAPA L.C.	MEAD 345.00-MEAD N 230.00 ck=1	774	1.063
1_b	MEAD 500.00-PERKINS 500.00 ck=1	WAPA L.C.	LIBERTY 345.00-LIBTYPHS 230.00 ck=1	780	1.07

Table 4
Lines and Transformer Over Loads Report
w/o PVD2 "Case 1"

1_b	MEAD 500.00-PERKINS 500.00 ck=1	WAPA L.C.	LIBTYPHS 230.00-LIBERTY 230.00 ck=1	781	1.07
1_b	MEAD 500.00-PERKINS 500.00 ck=1	WAPA L.C.	DEVERS 500.00-DEVERS 230.00 ck=1	1189	1.01
1_b	MEAD 500.00-PERKINS 500.00 ck=1	WAPA L.C.	DEVERS 500.00-DEVERS 230.00 ck=2	1290	1.01
1_c	MEAD 500.00-PERKINS 500.00 ck=1	WAPA L.C.	H ALLEN 500.00-MEAD 500.00 ck=1	15	1.034
1_c	MEAD 500.00-PERKINS 500.00 ck=1	WAPA L.C.	DAVIS 230.00-MEAD N 230.00 ck=1	30	1.01
1_c	MEAD 500.00-PERKINS 500.00 ck=1	WAPA L.C.	HOVRA5A6 230.00-MEAD S 230.00 ck=1	33	1.008
1_c	MEAD 500.00-PERKINS 500.00 ck=1	WAPA L.C.	HOVRA7-9 230.00-MEAD S 230.00 ck=1	34	1.008
1_c	MEAD 500.00-PERKINS 500.00 ck=1	WAPA L.C.	PARKER 230.00-HAVASU 230.00 ck=1	38	1.009
1_c	MEAD 500.00-PERKINS 500.00 ck=1	WAPA L.C.	LIBERTY 345.00-PEACOCK 345.00 ck=1	51	1.071
1_c	MEAD 500.00-PERKINS 500.00 ck=1	WAPA L.C.	HOVRN7N8 230.00-MEAD S 230.00 ck=1	59	1.009
1_c	MEAD 500.00-PERKINS 500.00 ck=1	WAPA L.C.	HOVRN5N6 230.00-MEAD S 230.00 ck=1	60	1.009
1_c	MEAD 500.00-PERKINS 500.00 ck=1	WAPA L.C.	HOVRN3N4 230.00-MEAD S 230.00 ck=1	61	1.009
1_c	MEAD 500.00-PERKINS 500.00 ck=1	WAPA L.C.	HOVRN1N2 230.00-MEAD S 230.00 ck=1	62	1.008
1_c	MEAD 500.00-PERKINS 500.00 ck=1	WAPA L.C.	HOVRA1A2 230.00-MEAD S 230.00 ck=1	63	1.008
1_c	MEAD 500.00-PERKINS 500.00 ck=1	WAPA L.C.	PEACOCK 345.00-MEAD 345.00 ck=1	73	1.064
1_c	HAVASU12 13.20-HAVASU 230.00 ck=1	WAPA L.C.	TOPOCK 230.00-BLK MESA 230.00 ck=1	74	1.059
1_c	HAVASU34 13.20-HAVASU 230.00 ck=1	WAPA L.C.	TOPOCK 230.00-BLK MESA 230.00 ck=1	74	1.059
1_c	HAVASU56 13.20-HAVASU 230.00 ck=1	WAPA L.C.	TOPOCK 230.00-BLK MESA 230.00 ck=1	74	1.059
1_c	MEAD 500.00-PERKINS 500.00 ck=1	WAPA L.C.	SIGURDPS 230.00-GLENCANY 230.00 ck=1	79	1.007
1_c	FLAGSTAF 345.00-GLENCANY 345.00 ck=2	WAPA L.C.	FLAGSTAF 345.00-GLENCANY 345.00 ck=1	80	1.151
1_c	FLAGSTAF 345.00-GLENCANY 345.00 ck=1	WAPA L.C.	FLAGSTAF 345.00-GLENCANY 345.00 ck=2	81	1.154
1_c	FLAGSTAF 345.00-PINPKBRB 345.00 ck=2	WAPA L.C.	FLAGSTAF 345.00-PINPKBRB 345.00 ck=1	82	1.127
1_c	FLAGSTAF 345.00-PINPKBRB 345.00 ck=1	WAPA L.C.	FLAGSTAF 345.00-PINPKBRB 345.00 ck=2	83	1.127
1_c	LIBERTY 345.00-PEACOCK 345.00 ck=1	WAPA L.C.	MEAD 500.00-PERKINS 500.00 ck=1	272	1.072
1_c	MEAD 500.00-PERKINS 500.00 ck=1	WAPA L.C.	SERRANO 500.00-VALLEYSC 500.00 ck=1	390	1.09
1_c	MEAD 500.00-PERKINS 500.00 ck=1	WAPA L.C.	DEVERS 500.00-VALLEYSC 500.00 ck=1	601	1.189
1_c	MEAD 500.00-PERKINS 500.00 ck=1	WAPA L.C.	DEVERS 230.00-OAK_VLLY 230.00 ck=1	603	1.007
1_c	MEAD 500.00-PERKINS 500.00 ck=1	WAPA L.C.	DEVERS 230.00-VSTA 230.00 ck=2	605	1.008
1_c	MEAD 500.00-PERKINS 500.00 ck=1	WAPA L.C.	VSTA 230.00-DEVERS 230.00 ck=1	643	1.007
1_c	MEAD 500.00-PERKINS 500.00 ck=1	WAPA L.C.	MOENKOPI 500.00-ELDORDO 500.00 ck=1	705	1.179
1_c	MEAD 500.00-PERKINS 500.00 ck=1	WAPA L.C.	PARKER 230.00-GENE 230.00 ck=1	718	1.007
1_c	MEAD 500.00-PERKINS 500.00 ck=1	WAPA L.C.	HOVRA3A4 230.00-MEAD N 230.00 ck=1	730	1.01
1_c	HAVASU12 13.20-HAVASU 230.00 ck=1	WAPA L.C.	TOPOCK 230.00-N.HAVASU 230.00 ck=1	733	1.054
1_c	HAVASU34 13.20-HAVASU 230.00 ck=1	WAPA L.C.	TOPOCK 230.00-N.HAVASU 230.00 ck=1	733	1.054
1_c	HAVASU56 13.20-HAVASU 230.00 ck=1	WAPA L.C.	TOPOCK 230.00-N.HAVASU 230.00 ck=1	733	1.054
1_c	LIBERTY 345.00-PEACOCK 345.00 ck=1	WAPA L.C.	PALOVRDE 500.00-MIDPOINX 500.00 ck=1	748	1.142
1_c	MEAD 500.00-PERKINS 500.00 ck=1	WAPA L.C.	PALOVRDE 500.00-MIDPOINX 500.00 ck=1	748	1.447

Table 4
Lines and Transformer Over Loads Report
w/o PVD2 "Case 1"

1_c	HAVASU12 13.20-HAVASU 230.00 ck=1	WAPA L.C.	PALOVRDE 500.00-MIDPOINX 500.00 ck=1	748	1.078
1_c	HAVASU34 13.20-HAVASU 230.00 ck=1	WAPA L.C.	PALOVRDE 500.00-MIDPOINX 500.00 ck=1	748	1.078
1_c	HAVASU56 13.20-HAVASU 230.00 ck=1	WAPA L.C.	PALOVRDE 500.00-MIDPOINX 500.00 ck=1	748	1.078
1_c	MEAD 500.00-PERKINS 500.00 ck=1	WAPA L.C.	HOVRA1A2 16.50-HOVRA1A2 230.00 ck=1	768	1.008
1_c	MEAD 500.00-PERKINS 500.00 ck=1	WAPA L.C.	HOVRN1N2 16.50-HOVRN1N2 230.00 ck=1	770	1.008
1_c	MEAD 500.00-PERKINS 500.00 ck=1	WAPA L.C.	HOVRN3N4 16.50-HOVRN3N4 230.00 ck=1	771	1.009
1_c	MEAD 500.00-PERKINS 500.00 ck=1	WAPA L.C.	HOVRN5N6 16.50-HOVRN5N6 230.00 ck=1	772	1.009
1_c	MEAD 500.00-PERKINS 500.00 ck=1	WAPA L.C.	HOVRN7N8 16.50-HOVRN7N8 230.00 ck=1	773	1.009
1_c	MEAD 500.00-PERKINS 500.00 ck=1	WAPA L.C.	MEAD 345.00-MEAD N 230.00 ck=1	774	1.064
1_c	MEAD 500.00-PERKINS 500.00 ck=1	WAPA L.C.	LIBERTY 345.00-LIBTYPHS 230.00 ck=1	780	1.071
1_c	MEAD 500.00-PERKINS 500.00 ck=1	WAPA L.C.	LIBTYPHS 230.00-LIBERTY 230.00 ck=1	781	1.071
1_c	MEAD 500.00-PERKINS 500.00 ck=1	WAPA L.C.	DEVERS 500.00-DEVERS 230.00 ck=1	1189	1.01
1_c	MEAD 500.00-PERKINS 500.00 ck=1	WAPA L.C.	DEVERS 500.00-DEVERS 230.00 ck=2	1290	1.01
1_d	MEAD 500.00-PERKINS 500.00 ck=1	WAPA L.C.	H ALLEN 500.00-MEAD 500.00 ck=1	15	1.032
1_d	MEAD 500.00-PERKINS 500.00 ck=1	WAPA L.C.	DAVIS 230.00-MEAD N 230.00 ck=1	30	1.008
1_d	MEAD 500.00-PERKINS 500.00 ck=1	WAPA L.C.	HOVRA5A6 230.00-MEAD S 230.00 ck=1	33	1.005
1_d	MEAD 500.00-PERKINS 500.00 ck=1	WAPA L.C.	HOVRA7-9 230.00-MEAD S 230.00 ck=1	34	1.006
1_d	MEAD 500.00-PERKINS 500.00 ck=1	WAPA L.C.	PARKER 230.00-HAVASU 230.00 ck=1	38	1.005
1_d	MEAD 500.00-PERKINS 500.00 ck=1	WAPA L.C.	LIBERTY 345.00-PEACOCK 345.00 ck=1	51	1.069
1_d	MEAD 500.00-PERKINS 500.00 ck=1	WAPA L.C.	HOVRN7N8 230.00-MEAD S 230.00 ck=1	59	1.007
1_d	MEAD 500.00-PERKINS 500.00 ck=1	WAPA L.C.	HOVRN5N6 230.00-MEAD S 230.00 ck=1	60	1.007
1_d	MEAD 500.00-PERKINS 500.00 ck=1	WAPA L.C.	HOVRN3N4 230.00-MEAD S 230.00 ck=1	61	1.007
1_d	MEAD 500.00-PERKINS 500.00 ck=1	WAPA L.C.	HOVRN1N2 230.00-MEAD S 230.00 ck=1	62	1.005
1_d	MEAD 500.00-PERKINS 500.00 ck=1	WAPA L.C.	HOVRA1A2 230.00-MEAD S 230.00 ck=1	63	1.006
1_d	MEAD 500.00-PERKINS 500.00 ck=1	WAPA L.C.	PEACOCK 345.00-MEAD 345.00 ck=1	73	1.061
1_d	HAVASU12 13.20-HAVASU 230.00 ck=1	WAPA L.C.	TOPOCK 230.00-BLK MESA 230.00 ck=1	74	1.059
1_d	HAVASU34 13.20-HAVASU 230.00 ck=1	WAPA L.C.	TOPOCK 230.00-BLK MESA 230.00 ck=1	74	1.059
1_d	HAVASU56 13.20-HAVASU 230.00 ck=1	WAPA L.C.	TOPOCK 230.00-BLK MESA 230.00 ck=1	74	1.059
1_d	MEAD 500.00-PERKINS 500.00 ck=1	WAPA L.C.	SIGURDPS 230.00-GLENCANY 230.00 ck=1	79	1.004
1_d	FLAGSTAF 345.00-GLENCANY 345.00 ck=2	WAPA L.C.	FLAGSTAF 345.00-GLENCANY 345.00 ck=1	80	1.158
1_d	FLAGSTAF 345.00-GLENCANY 345.00 ck=1	WAPA L.C.	FLAGSTAF 345.00-GLENCANY 345.00 ck=2	81	1.161
1_d	FLAGSTAF 345.00-PINPKBRB 345.00 ck=2	WAPA L.C.	FLAGSTAF 345.00-PINPKBRB 345.00 ck=1	82	1.134
1_d	FLAGSTAF 345.00-PINPKBRB 345.00 ck=1	WAPA L.C.	FLAGSTAF 345.00-PINPKBRB 345.00 ck=2	83	1.134
1_d	LIBERTY 345.00-PEACOCK 345.00 ck=1	WAPA L.C.	MEAD 500.00-PERKINS 500.00 ck=1	272	1.072
1_d	MEAD 500.00-PERKINS 500.00 ck=1	WAPA L.C.	SERRANO 500.00-VALLEYSC 500.00 ck=1	390	1.062
1_d	MEAD 500.00-PERKINS 500.00 ck=1	WAPA L.C.	DEVERS 500.00-VALLEYSC 500.00 ck=1	601	1.161
1_d	MEAD 500.00-PERKINS 500.00 ck=1	WAPA L.C.	MOENKOPI 500.00-ELDORDO 500.00 ck=1	705	1.17

Table 4
Lines and Transformer Over Loads Report
w/o PVD2 "Case 1"

1_d	MEAD 500.00-PERKINS 500.00 ck=1	WAPA L.C.	PARKER 230.00-GENE 230.00 ck=1	718	1.006
1_d	HAVASU12 13.20-HAVASU 230.00 ck=1	WAPA L.C.	BLYTHE 161.00-BLYTHESC 161.00 ck=1	719	1.047
1_d	HAVASU34 13.20-HAVASU 230.00 ck=1	WAPA L.C.	BLYTHE 161.00-BLYTHESC 161.00 ck=1	719	1.047
1_d	HAVASU56 13.20-HAVASU 230.00 ck=1	WAPA L.C.	BLYTHE 161.00-BLYTHESC 161.00 ck=1	719	1.047
1_d	MEAD 500.00-PERKINS 500.00 ck=1	WAPA L.C.	HOVRA3A4 230.00-MEAD N 230.00 ck=1	730	1.007
1_d	HAVASU12 13.20-HAVASU 230.00 ck=1	WAPA L.C.	TOPOCK 230.00-N.HAVASU 230.00 ck=1	733	1.054
1_d	HAVASU34 13.20-HAVASU 230.00 ck=1	WAPA L.C.	TOPOCK 230.00-N.HAVASU 230.00 ck=1	733	1.054
1_d	HAVASU56 13.20-HAVASU 230.00 ck=1	WAPA L.C.	TOPOCK 230.00-N.HAVASU 230.00 ck=1	733	1.054
1_d	LIBERTY 345.00-PEACOCK 345.00 ck=1	WAPA L.C.	PALOVRDE 500.00-MIDPOINX 500.00 ck=1	748	1.16
1_d	MEAD 500.00-PERKINS 500.00 ck=1	WAPA L.C.	PALOVRDE 500.00-MIDPOINX 500.00 ck=1	748	1.5
1_d	HAVASU12 13.20-HAVASU 230.00 ck=1	WAPA L.C.	PALOVRDE 500.00-MIDPOINX 500.00 ck=1	748	1.074
1_d	HAVASU34 13.20-HAVASU 230.00 ck=1	WAPA L.C.	PALOVRDE 500.00-MIDPOINX 500.00 ck=1	748	1.074
1_d	HAVASU56 13.20-HAVASU 230.00 ck=1	WAPA L.C.	PALOVRDE 500.00-MIDPOINX 500.00 ck=1	748	1.074
1_d	LIBERTY 345.00-PEACOCK 345.00 ck=1	WAPA L.C.	MIDPOINX 500.00-DEVERS 500.00 ck=1	749	1.158
1_d	MEAD 500.00-PERKINS 500.00 ck=1	WAPA L.C.	MIDPOINX 500.00-DEVERS 500.00 ck=1	749	1.5
1_d	HAVASU12 13.20-HAVASU 230.00 ck=1	WAPA L.C.	MIDPOINX 500.00-DEVERS 500.00 ck=1	749	1.078
1_d	HAVASU34 13.20-HAVASU 230.00 ck=1	WAPA L.C.	MIDPOINX 500.00-DEVERS 500.00 ck=1	749	1.078
1_d	HAVASU56 13.20-HAVASU 230.00 ck=1	WAPA L.C.	MIDPOINX 500.00-DEVERS 500.00 ck=1	749	1.078
1_d	MEAD 500.00-PERKINS 500.00 ck=1	WAPA L.C.	HOVRA1A2 16.50-HOVRA1A2 230.00 ck=1	768	1.006
1_d	MEAD 500.00-PERKINS 500.00 ck=1	WAPA L.C.	HOVRN1N2 16.50-HOVRN1N2 230.00 ck=1	770	1.005
1_d	MEAD 500.00-PERKINS 500.00 ck=1	WAPA L.C.	HOVRN3N4 16.50-HOVRN3N4 230.00 ck=1	771	1.007
1_d	MEAD 500.00-PERKINS 500.00 ck=1	WAPA L.C.	HOVRN5N6 16.50-HOVRN5N6 230.00 ck=1	772	1.007
1_d	MEAD 500.00-PERKINS 500.00 ck=1	WAPA L.C.	HOVRN7N8 16.50-HOVRN7N8 230.00 ck=1	773	1.007
1_d	MEAD 500.00-PERKINS 500.00 ck=1	WAPA L.C.	MEAD 345.00-MEAD N 230.00 ck=1	774	1.062
1_d	MEAD 500.00-PERKINS 500.00 ck=1	WAPA L.C.	LIBERTY 345.00-LIBTYPHS 230.00 ck=1	780	1.069
1_d	MEAD 500.00-PERKINS 500.00 ck=1	WAPA L.C.	LIBTYPHS 230.00-LIBERTY 230.00 ck=1	781	1.069
1_d	MEAD 500.00-PERKINS 500.00 ck=1	WAPA L.C.	DEVERS 500.00-DEVERS 230.00 ck=1	1189	1.005
1_d	MEAD 500.00-PERKINS 500.00 ck=1	WAPA L.C.	DEVERS 500.00-DEVERS 230.00 ck=2	1290	1.005
1_a	MIDPOINX 500.00-DEVERS 500.00 ck=1	SOCALIF	BEP2500 500.00-BLY500 500.00 ck=1	1	1.075
1_a	J.HINDS 230.00-MIRAGE 230.00 ck=1	SOCALIF	BLY500 500.00-DEVERS 500.00 ck=1	3	1.077
1_a	MIDPOINX 500.00-DEVERS 500.00 ck=1	SOCALIF	BLY500 500.00-DEVERS 500.00 ck=1	3	1.133
1_a	MNTV-CT1 18.00-MNTVIEW 230.00 ck=1	SOCALIF	BLY500 500.00-DEVERS 500.00 ck=1	3	1.095
1_a	MNTV-CT2 18.00-MNTVIEW 230.00 ck=1	SOCALIF	BLY500 500.00-DEVERS 500.00 ck=1	3	1.095
1_a	MNTV-CT3 18.00-MNTVIEW 230.00 ck=1	SOCALIF	BLY500 500.00-DEVERS 500.00 ck=1	3	1.095
1_a	MNTV-CT4 18.00-MNTVIEW 230.00 ck=1	SOCALIF	BLY500 500.00-DEVERS 500.00 ck=1	3	1.095
1_a	MIDPOINX 500.00-DEVERS 500.00 ck=1	SOCALIF	MEAD 500.00-MARKETPL 500.00 ck=1	35	1.066
1_a	MIDPOINX 500.00-DEVERS 500.00 ck=1	SOCALIF	PARKER 230.00-HAVASU 230.00 ck=1	38	1.034

Table 4
Lines and Transformer Over Loads Report
w/o PVD2 "Case 1"

1_a	MNTV-CT1 18.00-MNTVIEW 230.00 ck=1	SOCALIF	PARKER 230.00-HAVASU 230.00 ck=1	38	1.092
1_a	MNTV-CT2 18.00-MNTVIEW 230.00 ck=1	SOCALIF	PARKER 230.00-HAVASU 230.00 ck=1	38	1.092
1_a	MNTV-CT3 18.00-MNTVIEW 230.00 ck=1	SOCALIF	PARKER 230.00-HAVASU 230.00 ck=1	38	1.092
1_a	MNTV-CT4 18.00-MNTVIEW 230.00 ck=1	SOCALIF	PARKER 230.00-HAVASU 230.00 ck=1	38	1.092
1_a	MIDPOINX 500.00-DEVERS 500.00 ck=1	SOCALIF	LIBERTY 345.00-PEACOCK 345.00 ck=1	51	1.041
1_a	MIDPOINX 500.00-DEVERS 500.00 ck=1	SOCALIF	PEACOCK 345.00-MEAD 345.00 ck=1	73	1.033
1_a	J.HINDS 230.00-MIRAGE 230.00 ck=1	SOCALIF	BUCK230 230.00-BUCKPST2 230.00 ck=1	77	1.096
1_a	MIDPOINX 500.00-DEVERS 500.00 ck=1	SOCALIF	MEAD 500.00-PERKINS 500.00 ck=1	272	1.131
1_a	MNTV-CT1 18.00-MNTVIEW 230.00 ck=1	SOCALIF	MEAD 500.00-PERKINS 500.00 ck=1	272	1.094
1_a	MNTV-CT2 18.00-MNTVIEW 230.00 ck=1	SOCALIF	MEAD 500.00-PERKINS 500.00 ck=1	272	1.094
1_a	MNTV-CT3 18.00-MNTVIEW 230.00 ck=1	SOCALIF	MEAD 500.00-PERKINS 500.00 ck=1	272	1.094
1_a	MNTV-CT4 18.00-MNTVIEW 230.00 ck=1	SOCALIF	MEAD 500.00-PERKINS 500.00 ck=1	272	1.094
1_a	MIDPOINX 500.00-DEVERS 500.00 ck=1	SOCALIF	ELDORDO 500.00-LUGO 500.00 ck=1	303	1.068
1_a	MNTV-CT1 18.00-MNTVIEW 230.00 ck=1	SOCALIF	ELDORDO 500.00-LUGO 500.00 ck=1	303	1.104
1_a	MNTV-CT2 18.00-MNTVIEW 230.00 ck=1	SOCALIF	ELDORDO 500.00-LUGO 500.00 ck=1	303	1.104
1_a	MNTV-CT3 18.00-MNTVIEW 230.00 ck=1	SOCALIF	ELDORDO 500.00-LUGO 500.00 ck=1	303	1.104
1_a	MNTV-CT4 18.00-MNTVIEW 230.00 ck=1	SOCALIF	ELDORDO 500.00-LUGO 500.00 ck=1	303	1.104
1_a	MIDPOINX 500.00-DEVERS 500.00 ck=1	SOCALIF	LUGO 500.00-MIRALOMA 500.00 ck=2	331	1.031
1_a	MIDPOINX 500.00-DEVERS 500.00 ck=1	SOCALIF	LUGO 500.00-MIRALOMA 500.00 ck=3	332	1.031
1_a	MIDPOINX 500.00-DEVERS 500.00 ck=1	SOCALIF	LUGO 500.00-MOHAVE 500.00 ck=1	333	1.069
1_a	MNTV-CT1 18.00-MNTVIEW 230.00 ck=1	SOCALIF	LUGO 500.00-MOHAVE 500.00 ck=1	333	1.104
1_a	MNTV-CT2 18.00-MNTVIEW 230.00 ck=1	SOCALIF	LUGO 500.00-MOHAVE 500.00 ck=1	333	1.104
1_a	MNTV-CT3 18.00-MNTVIEW 230.00 ck=1	SOCALIF	LUGO 500.00-MOHAVE 500.00 ck=1	333	1.104
1_a	MNTV-CT4 18.00-MNTVIEW 230.00 ck=1	SOCALIF	LUGO 500.00-MOHAVE 500.00 ck=1	333	1.104
1_a	MIDPOINX 500.00-DEVERS 500.00 ck=1	SOCALIF	LUGO 500.00-MIRALOMA 500.00 ck=1	334	1.029
1_a	MNTV-CT1 18.00-MNTVIEW 230.00 ck=1	SOCALIF	LUGO 500.00-VINCENT 500.00 ck=1	335	1.09
1_a	MNTV-CT2 18.00-MNTVIEW 230.00 ck=1	SOCALIF	LUGO 500.00-VINCENT 500.00 ck=1	335	1.09
1_a	MNTV-CT3 18.00-MNTVIEW 230.00 ck=1	SOCALIF	LUGO 500.00-VINCENT 500.00 ck=1	335	1.09
1_a	MNTV-CT4 18.00-MNTVIEW 230.00 ck=1	SOCALIF	LUGO 500.00-VINCENT 500.00 ck=1	335	1.09
1_a	MNTV-CT1 18.00-MNTVIEW 230.00 ck=1	SOCALIF	LUGO 500.00-VINCENT 500.00 ck=2	336	1.09
1_a	MNTV-CT2 18.00-MNTVIEW 230.00 ck=1	SOCALIF	LUGO 500.00-VINCENT 500.00 ck=2	336	1.09
1_a	MNTV-CT3 18.00-MNTVIEW 230.00 ck=1	SOCALIF	LUGO 500.00-VINCENT 500.00 ck=2	336	1.09
1_a	MNTV-CT4 18.00-MNTVIEW 230.00 ck=1	SOCALIF	LUGO 500.00-VINCENT 500.00 ck=2	336	1.09
1_a	MIDPOINX 500.00-DEVERS 500.00 ck=1	SOCALIF	MOHAVE 500.00-ELDORDO 500.00 ck=1	355	1.07
1_a	MNTV-CT1 18.00-MNTVIEW 230.00 ck=1	SOCALIF	MOHAVE 500.00-ELDORDO 500.00 ck=1	355	1.095
1_a	MNTV-CT2 18.00-MNTVIEW 230.00 ck=1	SOCALIF	MOHAVE 500.00-ELDORDO 500.00 ck=1	355	1.095
1_a	MNTV-CT3 18.00-MNTVIEW 230.00 ck=1	SOCALIF	MOHAVE 500.00-ELDORDO 500.00 ck=1	355	1.095

Table 4
Lines and Transformer Over Loads Report
w/o PVD2 "Case 1"

1_a	MNTV-CT4 18.00-MNTVIEW 230.00 ck=1	SOCALIF	MOHAVE 500.00-ELDORDO 500.00 ck=1	355	1.095
1_a	SANBRDNO 230.00-DEVERS 230.00 ck=1	SOCALIF	SERRANO 500.00-VALLEYSC 500.00 ck=1	390	1.128
1_a	MNTV-CT1 18.00-MNTVIEW 230.00 ck=1	SOCALIF	SERRANO 500.00-VALLEYSC 500.00 ck=1	390	1.106
1_a	MNTV-CT2 18.00-MNTVIEW 230.00 ck=1	SOCALIF	SERRANO 500.00-VALLEYSC 500.00 ck=1	390	1.106
1_a	MNTV-CT3 18.00-MNTVIEW 230.00 ck=1	SOCALIF	SERRANO 500.00-VALLEYSC 500.00 ck=1	390	1.106
1_a	MNTV-CT4 18.00-MNTVIEW 230.00 ck=1	SOCALIF	SERRANO 500.00-VALLEYSC 500.00 ck=1	390	1.106
1_a	INYO 115.00-INYO PS 115.00 ck=1	SOCALIF	KRAMER 230.00-LUGO 230.00 ck=1	551	1.011
1_a	INYO 115.00-INYO PS 115.00 ck=1	SOCALIF	KRAMER 230.00-LUGO 230.00 ck=2	552	1.011
1_a	INYO 115.00-INYO PS 115.00 ck=1	SOCALIF	CONTROL 115.00-INYOKERN 115.00 ck=1	566	1.03
1_a	INYO 115.00-INYO PS 115.00 ck=1	SOCALIF	CONTROL 115.00-INYOKERN 115.00 ck=2	567	1.03
1_a	INYO 115.00-INYO PS 115.00 ck=1	SOCALIF	INYOKERN 115.00-KRAMER 115.00 ck=1	572	1.04
1_a	SEARLES 115.00-SEARLES 34.50 ck=1	SOCALIF	INYOKERN 115.00-KRAMER 115.00 ck=1	572	1.045
1_a	SANBRDNO 230.00-DEVERS 230.00 ck=1	SOCALIF	DEVERS 500.00-VALLEYSC 500.00 ck=1	601	1.475
1_a	DEVERS 230.00-OAK_VLLY 230.00 ck=1	SOCALIF	DEVERS 500.00-VALLEYSC 500.00 ck=1	601	1.204
1_a	DEVERS 230.00-VSTA 230.00 ck=2	SOCALIF	DEVERS 500.00-VALLEYSC 500.00 ck=1	601	1.158
1_a	VSTA 230.00-DEVERS 230.00 ck=1	SOCALIF	DEVERS 500.00-VALLEYSC 500.00 ck=1	601	1.235
1_a	MNTV-CT1 18.00-MNTVIEW 230.00 ck=1	SOCALIF	DEVERS 500.00-VALLEYSC 500.00 ck=1	601	1.18
1_a	MNTV-CT2 18.00-MNTVIEW 230.00 ck=1	SOCALIF	DEVERS 500.00-VALLEYSC 500.00 ck=1	601	1.18
1_a	MNTV-CT3 18.00-MNTVIEW 230.00 ck=1	SOCALIF	DEVERS 500.00-VALLEYSC 500.00 ck=1	601	1.18
1_a	MNTV-CT4 18.00-MNTVIEW 230.00 ck=1	SOCALIF	DEVERS 500.00-VALLEYSC 500.00 ck=1	601	1.18
1_a	SANBRDNO 230.00-DEVERS 230.00 ck=1	SOCALIF	DEVERS 230.00-OAK_VLLY 230.00 ck=1	603	1.056
1_a	MIDPOINX 500.00-DEVERS 500.00 ck=1	SOCALIF	INDIGO 115.00-TAP817 115.00 ck=1	640	1.026
1_a	MIDPOINX 500.00-DEVERS 500.00 ck=1	SOCALIF	J.HINDS 230.00-MIRAGE 230.00 ck=1	665	1.081
1_a	MIDPOINX 500.00-DEVERS 500.00 ck=1	SOCALIF	MOENKOPI 500.00-ELDORDO 500.00 ck=1	705	1.082
1_a	MNTV-CT1 18.00-MNTVIEW 230.00 ck=1	SOCALIF	MOENKOPI 500.00-ELDORDO 500.00 ck=1	705	1.094
1_a	MNTV-CT2 18.00-MNTVIEW 230.00 ck=1	SOCALIF	MOENKOPI 500.00-ELDORDO 500.00 ck=1	705	1.094
1_a	MNTV-CT3 18.00-MNTVIEW 230.00 ck=1	SOCALIF	MOENKOPI 500.00-ELDORDO 500.00 ck=1	705	1.094
1_a	MNTV-CT4 18.00-MNTVIEW 230.00 ck=1	SOCALIF	MOENKOPI 500.00-ELDORDO 500.00 ck=1	705	1.094
1_a	ELDORDO 500.00-LUGO 500.00 ck=1	SOCALIF	LUGO 500.00-VICTORVL 500.00 ck=1	723	1.031
1_a	LUGO 500.00-MOHAVE 500.00 ck=1	SOCALIF	LUGO 500.00-VICTORVL 500.00 ck=1	723	1.044
1_a	MIDPOINX 500.00-DEVERS 500.00 ck=1	SOCALIF	LUGO 500.00-VICTORVL 500.00 ck=1	723	1.085
1_a	MNTV-CT1 18.00-MNTVIEW 230.00 ck=1	SOCALIF	LUGO 500.00-VICTORVL 500.00 ck=1	723	1.093
1_a	MNTV-CT2 18.00-MNTVIEW 230.00 ck=1	SOCALIF	LUGO 500.00-VICTORVL 500.00 ck=1	723	1.093
1_a	MNTV-CT3 18.00-MNTVIEW 230.00 ck=1	SOCALIF	LUGO 500.00-VICTORVL 500.00 ck=1	723	1.093
1_a	MNTV-CT4 18.00-MNTVIEW 230.00 ck=1	SOCALIF	LUGO 500.00-VICTORVL 500.00 ck=1	723	1.093
1_a	INYO 115.00-INYO PS 115.00 ck=1	SOCALIF	OWENSCON 230.00-INYO 230.00 ck=1	727	1.33
1_a	MIDPOINX 500.00-DEVERS 500.00 ck=1	SOCALIF	BUCK230 230.00-J.HINDS 230.00 ck=1	734	1.092

Table 4
Lines and Transformer Over Loads Report
w/o PVD2 "Case 1"

1_a	LUGO 500.00-MOHAVE 500.00 ck=1	SOCALIF	MIDPOINX 500.00-DEVERS 500.00 ck=1	749	1.001
1_a	J.HINDS 230.00-MIRAGE 230.00 ck=1	SOCALIF	MIDPOINX 500.00-DEVERS 500.00 ck=1	749	1.735
1_a	J.HINDS 230.00-MIRAGE 230.00 ck=1	SOCALIF	MIDPOINX 500.00-MIDPXPST 230.00 ck=1	750	1.096
1_a	MIDPOINX 500.00-DEVERS 500.00 ck=1	SOCALIF	MEAD 345.00-MEAD N 230.00 ck=1	774	1.033
1_a	MIDPOINX 500.00-DEVERS 500.00 ck=1	SOCALIF	LIBERTY 345.00-LIBTYPHS 230.00 ck=1	780	1.041
1_a	MIDPOINX 500.00-DEVERS 500.00 ck=1	SOCALIF	LIBTYPHS 230.00-LIBERTY 230.00 ck=1	781	1.041
1_a	J.HINDS 230.00-MIRAGE 230.00 ck=1	SOCALIF	MIDPXPST 230.00-BUCKPST2 230.00 ck=1	782	1.096
1_a	EAGLROCK 230.00-EAGLROCK 66.00 ck=4	SOCALIF	EAGLROCK 230.00-EAGLROCK 66.00 ck=3	936	1.039
1_a	EAGLROCK 230.00-EAGLROCK 66.00 ck=3	SOCALIF	EAGLROCK 230.00-EAGLROCK 66.00 ck=4	937	1.032
1_a	EL NIDO 230.00-EL NIDO 66.00 ck=3	SOCALIF	EL NIDO 230.00-EL NIDO 66.00 ck=1	938	1.424
1_a	EL NIDO 230.00-EL NIDO 66.00 ck=1	SOCALIF	EL NIDO 230.00-EL NIDO 66.00 ck=3	939	1.426
1_a	LCIENEGA 230.00-LCIENEGA 66.00 ck=4	SOCALIF	LCIENEGA 230.00-LCIENEGA 66.00 ck=3	998	1.071
1_a	LCIENEGA 230.00-LCIENEGA 66.00 ck=3	SOCALIF	LCIENEGA 230.00-LCIENEGA 66.00 ck=4	999	1.101
1_a	S.CLARA 230.00-S.CLARA 66.00 ck=4	SOCALIF	S.CLARA 230.00-S.CLARA 66.00 ck=2	1046	1.083
1_a	S.CLARA 230.00-S.CLARA 66.00 ck=2	SOCALIF	S.CLARA 230.00-S.CLARA 66.00 ck=4	1047	1.035
1_a	J.HINDS 230.00-MIRAGE 230.00 ck=1	SOCALIF	DEVERS 500.00-DEVERS 230.00 ck=1	1189	1.004
1_a	MNTV-CT2 18.00-MNTVIEW 230.00 ck=1	SOCALIF	MNTV-CT1 18.00-MNTVIEW 230.00 ck=1	1284	1.093
1_a	MNTV-CT3 18.00-MNTVIEW 230.00 ck=1	SOCALIF	MNTV-CT1 18.00-MNTVIEW 230.00 ck=1	1284	1.093
1_a	MNTV-CT4 18.00-MNTVIEW 230.00 ck=1	SOCALIF	MNTV-CT1 18.00-MNTVIEW 230.00 ck=1	1284	1.093
1_a	MNTV-CT1 18.00-MNTVIEW 230.00 ck=1	SOCALIF	MNTV-CT2 18.00-MNTVIEW 230.00 ck=1	1285	1.093
1_a	MNTV-CT3 18.00-MNTVIEW 230.00 ck=1	SOCALIF	MNTV-CT2 18.00-MNTVIEW 230.00 ck=1	1285	1.093
1_a	MNTV-CT4 18.00-MNTVIEW 230.00 ck=1	SOCALIF	MNTV-CT2 18.00-MNTVIEW 230.00 ck=1	1285	1.093
1_a	MNTV-CT1 18.00-MNTVIEW 230.00 ck=1	SOCALIF	MNTV-ST1 18.00-MNTVIEW 230.00 ck=1	1286	1.108
1_a	MNTV-CT2 18.00-MNTVIEW 230.00 ck=1	SOCALIF	MNTV-ST1 18.00-MNTVIEW 230.00 ck=1	1286	1.108
1_a	MNTV-CT3 18.00-MNTVIEW 230.00 ck=1	SOCALIF	MNTV-ST1 18.00-MNTVIEW 230.00 ck=1	1286	1.108
1_a	MNTV-CT4 18.00-MNTVIEW 230.00 ck=1	SOCALIF	MNTV-ST1 18.00-MNTVIEW 230.00 ck=1	1286	1.108
1_a	MNTV-CT1 18.00-MNTVIEW 230.00 ck=1	SOCALIF	MNTV-CT3 18.00-MNTVIEW 230.00 ck=1	1287	1.093
1_a	MNTV-CT2 18.00-MNTVIEW 230.00 ck=1	SOCALIF	MNTV-CT3 18.00-MNTVIEW 230.00 ck=1	1287	1.093
1_a	MNTV-CT4 18.00-MNTVIEW 230.00 ck=1	SOCALIF	MNTV-CT3 18.00-MNTVIEW 230.00 ck=1	1287	1.093
1_a	MNTV-CT1 18.00-MNTVIEW 230.00 ck=1	SOCALIF	MNTV-CT4 18.00-MNTVIEW 230.00 ck=1	1288	1.093
1_a	MNTV-CT2 18.00-MNTVIEW 230.00 ck=1	SOCALIF	MNTV-CT4 18.00-MNTVIEW 230.00 ck=1	1288	1.093
1_a	MNTV-CT3 18.00-MNTVIEW 230.00 ck=1	SOCALIF	MNTV-CT4 18.00-MNTVIEW 230.00 ck=1	1288	1.093
1_a	MNTV-CT1 18.00-MNTVIEW 230.00 ck=1	SOCALIF	MNTV-ST2 18.00-MNTVIEW 230.00 ck=1	1289	1.108
1_a	MNTV-CT2 18.00-MNTVIEW 230.00 ck=1	SOCALIF	MNTV-ST2 18.00-MNTVIEW 230.00 ck=1	1289	1.108
1_a	MNTV-CT3 18.00-MNTVIEW 230.00 ck=1	SOCALIF	MNTV-ST2 18.00-MNTVIEW 230.00 ck=1	1289	1.108
1_a	MNTV-CT4 18.00-MNTVIEW 230.00 ck=1	SOCALIF	MNTV-ST2 18.00-MNTVIEW 230.00 ck=1	1289	1.108
1_a	J.HINDS 230.00-MIRAGE 230.00 ck=1	SOCALIF	DEVERS 500.00-DEVERS 230.00 ck=2	1290	1.004

Table 4
Lines and Transformer Over Loads Report
w/o PVD2 "Case 1"

1_a	MIDPOINX	500.00-DEVERS	500.00 ck=1	SOCALIF	BEP2500	500.00-BLY2CT1	16.00 ck=1	1293	1.034
1_a	MIDPOINX	500.00-DEVERS	500.00 ck=1	SOCALIF	BEP2500	500.00-BLY2CT2	16.00 ck=1	1294	1.034
1_a	MIDPOINX	500.00-DEVERS	500.00 ck=1	SOCALIF	BEP2500	500.00-BLY2ST1	16.00 ck=1	1295	1.033
1_a	MIDPOINX	500.00-DEVERS	500.00 ck=1	SOCALIF	BLY500	500.00-BUCKBLVD	161.00 ck=1	1297	1.023
1_b	MIDPOINX	500.00-DEVERS	500.00 ck=1	SOCALIF	BEP2500	500.00-BLY500	500.00 ck=1	1	1.173
1_b	MIDPOINX	500.00-DEVERS	500.00 ck=1	SOCALIF	BLY500	500.00-DEVERS	500.00 ck=1	3	1.22
1_b	MNTV-CT1	18.00-MNTVIEW	230.00 ck=1	SOCALIF	BLY500	500.00-DEVERS	500.00 ck=1	3	1.095
1_b	MNTV-CT2	18.00-MNTVIEW	230.00 ck=1	SOCALIF	BLY500	500.00-DEVERS	500.00 ck=1	3	1.095
1_b	MNTV-CT3	18.00-MNTVIEW	230.00 ck=1	SOCALIF	BLY500	500.00-DEVERS	500.00 ck=1	3	1.095
1_b	MNTV-CT4	18.00-MNTVIEW	230.00 ck=1	SOCALIF	BLY500	500.00-DEVERS	500.00 ck=1	3	1.095
1_b	MIDPOINX	500.00-DEVERS	500.00 ck=1	SOCALIF	MEAD	500.00-MARKETPL	500.00 ck=1	35	1.164
1_b	MIDPOINX	500.00-DEVERS	500.00 ck=1	SOCALIF	PARKER	230.00-HAVASU	230.00 ck=1	38	1.131
1_b	MNTV-CT1	18.00-MNTVIEW	230.00 ck=1	SOCALIF	PARKER	230.00-HAVASU	230.00 ck=1	38	1.09
1_b	MNTV-CT2	18.00-MNTVIEW	230.00 ck=1	SOCALIF	PARKER	230.00-HAVASU	230.00 ck=1	38	1.09
1_b	MNTV-CT3	18.00-MNTVIEW	230.00 ck=1	SOCALIF	PARKER	230.00-HAVASU	230.00 ck=1	38	1.09
1_b	MNTV-CT4	18.00-MNTVIEW	230.00 ck=1	SOCALIF	PARKER	230.00-HAVASU	230.00 ck=1	38	1.09
1_b	MIDPOINX	500.00-DEVERS	500.00 ck=1	SOCALIF	LIBERTY	345.00-PEACOCK	345.00 ck=1	51	1.141
1_b	MIDPOINX	500.00-DEVERS	500.00 ck=1	SOCALIF	PEACOCK	345.00-MEAD	345.00 ck=1	73	1.132
1_b	MIDPOINX	500.00-DEVERS	500.00 ck=1	SOCALIF	MEAD	500.00-PERKINS	500.00 ck=1	272	1.235
1_b	MNTV-CT1	18.00-MNTVIEW	230.00 ck=1	SOCALIF	MEAD	500.00-PERKINS	500.00 ck=1	272	1.093
1_b	MNTV-CT2	18.00-MNTVIEW	230.00 ck=1	SOCALIF	MEAD	500.00-PERKINS	500.00 ck=1	272	1.093
1_b	MNTV-CT3	18.00-MNTVIEW	230.00 ck=1	SOCALIF	MEAD	500.00-PERKINS	500.00 ck=1	272	1.093
1_b	MNTV-CT4	18.00-MNTVIEW	230.00 ck=1	SOCALIF	MEAD	500.00-PERKINS	500.00 ck=1	272	1.093
1_b	MIDPOINX	500.00-DEVERS	500.00 ck=1	SOCALIF	ELDORDO	500.00-LUGO	500.00 ck=1	303	1.166
1_b	MNTV-CT1	18.00-MNTVIEW	230.00 ck=1	SOCALIF	ELDORDO	500.00-LUGO	500.00 ck=1	303	1.103
1_b	MNTV-CT2	18.00-MNTVIEW	230.00 ck=1	SOCALIF	ELDORDO	500.00-LUGO	500.00 ck=1	303	1.103
1_b	MNTV-CT3	18.00-MNTVIEW	230.00 ck=1	SOCALIF	ELDORDO	500.00-LUGO	500.00 ck=1	303	1.103
1_b	MNTV-CT4	18.00-MNTVIEW	230.00 ck=1	SOCALIF	ELDORDO	500.00-LUGO	500.00 ck=1	303	1.103
1_b	MIDPOINX	500.00-DEVERS	500.00 ck=1	SOCALIF	LUGO	500.00-MIRALOMA	500.00 ck=2	331	1.129
1_b	MIDPOINX	500.00-DEVERS	500.00 ck=1	SOCALIF	LUGO	500.00-MIRALOMA	500.00 ck=3	332	1.129
1_b	MIDPOINX	500.00-DEVERS	500.00 ck=1	SOCALIF	LUGO	500.00-MOHAVE	500.00 ck=1	333	1.167
1_b	MNTV-CT1	18.00-MNTVIEW	230.00 ck=1	SOCALIF	LUGO	500.00-MOHAVE	500.00 ck=1	333	1.103
1_b	MNTV-CT2	18.00-MNTVIEW	230.00 ck=1	SOCALIF	LUGO	500.00-MOHAVE	500.00 ck=1	333	1.103
1_b	MNTV-CT3	18.00-MNTVIEW	230.00 ck=1	SOCALIF	LUGO	500.00-MOHAVE	500.00 ck=1	333	1.103
1_b	MNTV-CT4	18.00-MNTVIEW	230.00 ck=1	SOCALIF	LUGO	500.00-MOHAVE	500.00 ck=1	333	1.103
1_b	MIDPOINX	500.00-DEVERS	500.00 ck=1	SOCALIF	LUGO	500.00-MIRALOMA	500.00 ck=1	334	1.127
1_b	MNTV-CT1	18.00-MNTVIEW	230.00 ck=1	SOCALIF	LUGO	500.00-VINCENT	500.00 ck=1	335	1.089

Table 4
Lines and Transformer Over Loads Report
w/o PVD2 "Case 1"

1_b	MNTV-CT2 18.00-MNTVIEW 230.00 ck=1	SOCALIF	LUGO 500.00-VINCENT 500.00 ck=1	335	1.089
1_b	MNTV-CT3 18.00-MNTVIEW 230.00 ck=1	SOCALIF	LUGO 500.00-VINCENT 500.00 ck=1	335	1.089
1_b	MNTV-CT4 18.00-MNTVIEW 230.00 ck=1	SOCALIF	LUGO 500.00-VINCENT 500.00 ck=1	335	1.089
1_b	MNTV-CT1 18.00-MNTVIEW 230.00 ck=1	SOCALIF	LUGO 500.00-VINCENT 500.00 ck=2	336	1.089
1_b	MNTV-CT2 18.00-MNTVIEW 230.00 ck=1	SOCALIF	LUGO 500.00-VINCENT 500.00 ck=2	336	1.089
1_b	MNTV-CT3 18.00-MNTVIEW 230.00 ck=1	SOCALIF	LUGO 500.00-VINCENT 500.00 ck=2	336	1.089
1_b	MNTV-CT4 18.00-MNTVIEW 230.00 ck=1	SOCALIF	LUGO 500.00-VINCENT 500.00 ck=2	336	1.089
1_b	MIDPOINX 500.00-DEVERS 500.00 ck=1	SOCALIF	MOHAVE 500.00-ELDORDO 500.00 ck=1	355	1.168
1_b	MNTV-CT1 18.00-MNTVIEW 230.00 ck=1	SOCALIF	MOHAVE 500.00-ELDORDO 500.00 ck=1	355	1.094
1_b	MNTV-CT2 18.00-MNTVIEW 230.00 ck=1	SOCALIF	MOHAVE 500.00-ELDORDO 500.00 ck=1	355	1.094
1_b	MNTV-CT3 18.00-MNTVIEW 230.00 ck=1	SOCALIF	MOHAVE 500.00-ELDORDO 500.00 ck=1	355	1.094
1_b	MNTV-CT4 18.00-MNTVIEW 230.00 ck=1	SOCALIF	MOHAVE 500.00-ELDORDO 500.00 ck=1	355	1.094
1_b	SANBRDNO 230.00-DEVERS 230.00 ck=1	SOCALIF	SERRANO 500.00-VALLEYSC 500.00 ck=1	390	1.123
1_b	MNTV-CT1 18.00-MNTVIEW 230.00 ck=1	SOCALIF	SERRANO 500.00-VALLEYSC 500.00 ck=1	390	1.105
1_b	MNTV-CT2 18.00-MNTVIEW 230.00 ck=1	SOCALIF	SERRANO 500.00-VALLEYSC 500.00 ck=1	390	1.105
1_b	MNTV-CT3 18.00-MNTVIEW 230.00 ck=1	SOCALIF	SERRANO 500.00-VALLEYSC 500.00 ck=1	390	1.105
1_b	MNTV-CT4 18.00-MNTVIEW 230.00 ck=1	SOCALIF	SERRANO 500.00-VALLEYSC 500.00 ck=1	390	1.105
1_b	INYO 115.00-INYO PS 115.00 ck=1	SOCALIF	KRAMER 230.00-LUGO 230.00 ck=1	551	1.011
1_b	INYO 115.00-INYO PS 115.00 ck=1	SOCALIF	KRAMER 230.00-LUGO 230.00 ck=2	552	1.011
1_b	INYO 115.00-INYO PS 115.00 ck=1	SOCALIF	CONTROL 115.00-INYOKERN 115.00 ck=1	566	1.031
1_b	INYO 115.00-INYO PS 115.00 ck=1	SOCALIF	CONTROL 115.00-INYOKERN 115.00 ck=2	567	1.031
1_b	INYO 115.00-INYO PS 115.00 ck=1	SOCALIF	INYOKERN 115.00-KRAMER 115.00 ck=1	572	1.04
1_b	SEARLES 115.00-SEARLES 34.50 ck=1	SOCALIF	INYOKERN 115.00-KRAMER 115.00 ck=1	572	1.045
1_b	SANBRDNO 230.00-DEVERS 230.00 ck=1	SOCALIF	DEVERS 500.00-VALLEYSC 500.00 ck=1	601	1.471
1_b	DEVERS 230.00-OAK_VLLY 230.00 ck=1	SOCALIF	DEVERS 500.00-VALLEYSC 500.00 ck=1	601	1.201
1_b	DEVERS 230.00-VSTA 230.00 ck=2	SOCALIF	DEVERS 500.00-VALLEYSC 500.00 ck=1	601	1.154
1_b	VSTA 230.00-DEVERS 230.00 ck=1	SOCALIF	DEVERS 500.00-VALLEYSC 500.00 ck=1	601	1.231
1_b	devers i 13.80-DEVERS 230.00 ck=1	SOCALIF	DEVERS 500.00-VALLEYSC 500.00 ck=1	601	1
1_b	MNTV-CT1 18.00-MNTVIEW 230.00 ck=1	SOCALIF	DEVERS 500.00-VALLEYSC 500.00 ck=1	601	1.179
1_b	MNTV-CT2 18.00-MNTVIEW 230.00 ck=1	SOCALIF	DEVERS 500.00-VALLEYSC 500.00 ck=1	601	1.179
1_b	MNTV-CT3 18.00-MNTVIEW 230.00 ck=1	SOCALIF	DEVERS 500.00-VALLEYSC 500.00 ck=1	601	1.179
1_b	MNTV-CT4 18.00-MNTVIEW 230.00 ck=1	SOCALIF	DEVERS 500.00-VALLEYSC 500.00 ck=1	601	1.179
1_b	devers2i 13.80-DEVERS 230.00 ck=2	SOCALIF	DEVERS 500.00-VALLEYSC 500.00 ck=1	601	1
1_b	SANBRDNO 230.00-DEVERS 230.00 ck=1	SOCALIF	DEVERS 230.00-OAK_VLLY 230.00 ck=1	603	1.038
1_b	MIDPOINX 500.00-DEVERS 500.00 ck=1	SOCALIF	INDIGO 115.00-TAP817 115.00 ck=1	640	1.125
1_b	MIDPOINX 500.00-DEVERS 500.00 ck=1	SOCALIF	EAGLEMTN 230.00-IRON MTN 230.00 ck=1	663	1.124
1_b	MIDPOINX 500.00-DEVERS 500.00 ck=1	SOCALIF	IRON MTN 230.00-CAMINO 230.00 ck=1	664	1.124

Table 4
Lines and Transformer Over Loads Report
w/o PVD2 "Case 1"

1_b	MIDPOINX 500.00-DEVERS 500.00 ck=1	SOCALIF	J.HINDS 230.00-MIRAGE 230.00 ck=1	665	1.127
1_b	MIDPOINX 500.00-DEVERS 500.00 ck=1	SOCALIF	J.HINDS 230.00-EAGLEMTN 230.00 ck=1	666	1.127
1_b	MIDPOINX 500.00-DEVERS 500.00 ck=1	SOCALIF	MOENKOPI 500.00-ELDORDO 500.00 ck=1	705	1.185
1_b	MNTV-CT1 18.00-MNTVIEW 230.00 ck=1	SOCALIF	MOENKOPI 500.00-ELDORDO 500.00 ck=1	705	1.093
1_b	MNTV-CT2 18.00-MNTVIEW 230.00 ck=1	SOCALIF	MOENKOPI 500.00-ELDORDO 500.00 ck=1	705	1.093
1_b	MNTV-CT3 18.00-MNTVIEW 230.00 ck=1	SOCALIF	MOENKOPI 500.00-ELDORDO 500.00 ck=1	705	1.093
1_b	MNTV-CT4 18.00-MNTVIEW 230.00 ck=1	SOCALIF	MOENKOPI 500.00-ELDORDO 500.00 ck=1	705	1.093
1_b	ELDORDO 500.00-LUGO 500.00 ck=1	SOCALIF	LUGO 500.00-VICTORVL 500.00 ck=1	723	1.027
1_b	LUGO 500.00-MOHAVE 500.00 ck=1	SOCALIF	LUGO 500.00-VICTORVL 500.00 ck=1	723	1.04
1_b	MIDPOINX 500.00-DEVERS 500.00 ck=1	SOCALIF	LUGO 500.00-VICTORVL 500.00 ck=1	723	1.182
1_b	MNTV-CT1 18.00-MNTVIEW 230.00 ck=1	SOCALIF	LUGO 500.00-VICTORVL 500.00 ck=1	723	1.092
1_b	MNTV-CT2 18.00-MNTVIEW 230.00 ck=1	SOCALIF	LUGO 500.00-VICTORVL 500.00 ck=1	723	1.092
1_b	MNTV-CT3 18.00-MNTVIEW 230.00 ck=1	SOCALIF	LUGO 500.00-VICTORVL 500.00 ck=1	723	1.092
1_b	MNTV-CT4 18.00-MNTVIEW 230.00 ck=1	SOCALIF	LUGO 500.00-VICTORVL 500.00 ck=1	723	1.092
1_b	INYO 115.00-INYO PS 115.00 ck=1	SOCALIF	OWENSCON 230.00-INYO 230.00 ck=1	727	1.331
1_b	MIDPOINX 500.00-MIDPXPST 230.00 ck=1	SOCALIF	PALOVRDE 500.00-MIDPOINX 500.00 ck=1	748	1.014
1_b	ELDORDO 500.00-LUGO 500.00 ck=1	SOCALIF	MIDPOINX 500.00-DEVERS 500.00 ck=1	749	1.021
1_b	LUGO 500.00-MOHAVE 500.00 ck=1	SOCALIF	MIDPOINX 500.00-DEVERS 500.00 ck=1	749	1.033
1_b	MIDPOINX 500.00-DEVERS 500.00 ck=1	SOCALIF	MEAD 345.00-MEAD N 230.00 ck=1	774	1.132
1_b	MIDPOINX 500.00-DEVERS 500.00 ck=1	SOCALIF	LIBERTY 345.00-LIBTYPHS 230.00 ck=1	780	1.141
1_b	MIDPOINX 500.00-DEVERS 500.00 ck=1	SOCALIF	LIBTYPHS 230.00-LIBERTY 230.00 ck=1	781	1.141
1_b	EAGLROCK 230.00-EAGLROCK 66.00 ck=4	SOCALIF	EAGLROCK 230.00-EAGLROCK 66.00 ck=3	936	1.039
1_b	EAGLROCK 230.00-EAGLROCK 66.00 ck=3	SOCALIF	EAGLROCK 230.00-EAGLROCK 66.00 ck=4	937	1.032
1_b	EL NIDO 230.00-EL NIDO 66.00 ck=3	SOCALIF	EL NIDO 230.00-EL NIDO 66.00 ck=1	938	1.424
1_b	EL NIDO 230.00-EL NIDO 66.00 ck=1	SOCALIF	EL NIDO 230.00-EL NIDO 66.00 ck=3	939	1.426
1_b	LCIENEGA 230.00-LCIENEGA 66.00 ck=4	SOCALIF	LCIENEGA 230.00-LCIENEGA 66.00 ck=3	998	1.071
1_b	LCIENEGA 230.00-LCIENEGA 66.00 ck=3	SOCALIF	LCIENEGA 230.00-LCIENEGA 66.00 ck=4	999	1.101
1_b	S.CLARA 230.00-S.CLARA 66.00 ck=4	SOCALIF	S.CLARA 230.00-S.CLARA 66.00 ck=2	1046	1.083
1_b	S.CLARA 230.00-S.CLARA 66.00 ck=2	SOCALIF	S.CLARA 230.00-S.CLARA 66.00 ck=4	1047	1.035
1_b	devers2i 13.80-DEVERS 230.00 ck=2	SOCALIF	DEVERS 500.00-DEVERS 230.00 ck=1	1189	1.054
1_b	MNTV-CT2 18.00-MNTVIEW 230.00 ck=1	SOCALIF	MNTV-CT1 18.00-MNTVIEW 230.00 ck=1	1284	1.091
1_b	MNTV-CT3 18.00-MNTVIEW 230.00 ck=1	SOCALIF	MNTV-CT1 18.00-MNTVIEW 230.00 ck=1	1284	1.091
1_b	MNTV-CT4 18.00-MNTVIEW 230.00 ck=1	SOCALIF	MNTV-CT1 18.00-MNTVIEW 230.00 ck=1	1284	1.091
1_b	MNTV-CT1 18.00-MNTVIEW 230.00 ck=1	SOCALIF	MNTV-CT2 18.00-MNTVIEW 230.00 ck=1	1285	1.091
1_b	MNTV-CT3 18.00-MNTVIEW 230.00 ck=1	SOCALIF	MNTV-CT2 18.00-MNTVIEW 230.00 ck=1	1285	1.091
1_b	MNTV-CT4 18.00-MNTVIEW 230.00 ck=1	SOCALIF	MNTV-CT2 18.00-MNTVIEW 230.00 ck=1	1285	1.091
1_b	MNTV-CT1 18.00-MNTVIEW 230.00 ck=1	SOCALIF	MNTV-ST1 18.00-MNTVIEW 230.00 ck=1	1286	1.106

Table 4
Lines and Transformer Over Loads Report
w/o PVD2 "Case 1"

1_b	MNTV-CT2	18.00-MNTVIEW	230.00 ck=1	SOCALIF	MNTV-ST1	18.00-MNTVIEW	230.00 ck=1	1286	1.106
1_b	MNTV-CT3	18.00-MNTVIEW	230.00 ck=1	SOCALIF	MNTV-ST1	18.00-MNTVIEW	230.00 ck=1	1286	1.106
1_b	MNTV-CT4	18.00-MNTVIEW	230.00 ck=1	SOCALIF	MNTV-ST1	18.00-MNTVIEW	230.00 ck=1	1286	1.106
1_b	MNTV-CT1	18.00-MNTVIEW	230.00 ck=1	SOCALIF	MNTV-CT3	18.00-MNTVIEW	230.00 ck=1	1287	1.091
1_b	MNTV-CT2	18.00-MNTVIEW	230.00 ck=1	SOCALIF	MNTV-CT3	18.00-MNTVIEW	230.00 ck=1	1287	1.091
1_b	MNTV-CT4	18.00-MNTVIEW	230.00 ck=1	SOCALIF	MNTV-CT3	18.00-MNTVIEW	230.00 ck=1	1287	1.091
1_b	MNTV-CT1	18.00-MNTVIEW	230.00 ck=1	SOCALIF	MNTV-CT4	18.00-MNTVIEW	230.00 ck=1	1288	1.091
1_b	MNTV-CT2	18.00-MNTVIEW	230.00 ck=1	SOCALIF	MNTV-CT4	18.00-MNTVIEW	230.00 ck=1	1288	1.091
1_b	MNTV-CT3	18.00-MNTVIEW	230.00 ck=1	SOCALIF	MNTV-CT4	18.00-MNTVIEW	230.00 ck=1	1288	1.091
1_b	MNTV-CT1	18.00-MNTVIEW	230.00 ck=1	SOCALIF	MNTV-ST2	18.00-MNTVIEW	230.00 ck=1	1289	1.106
1_b	MNTV-CT2	18.00-MNTVIEW	230.00 ck=1	SOCALIF	MNTV-ST2	18.00-MNTVIEW	230.00 ck=1	1289	1.106
1_b	MNTV-CT3	18.00-MNTVIEW	230.00 ck=1	SOCALIF	MNTV-ST2	18.00-MNTVIEW	230.00 ck=1	1289	1.106
1_b	MNTV-CT4	18.00-MNTVIEW	230.00 ck=1	SOCALIF	MNTV-ST2	18.00-MNTVIEW	230.00 ck=1	1289	1.106
1_b	devers i	13.80-DEVERS	230.00 ck=1	SOCALIF	DEVERS	500.00-DEVERS	230.00 ck=2	1290	1.054
1_b	MIDPOINX	500.00-DEVERS	500.00 ck=1	SOCALIF	BEP2500	500.00-BLY2CT1	16.00 ck=1	1293	1.132
1_b	MIDPOINX	500.00-DEVERS	500.00 ck=1	SOCALIF	BEP2500	500.00-BLY2CT2	16.00 ck=1	1294	1.132
1_b	MIDPOINX	500.00-DEVERS	500.00 ck=1	SOCALIF	BEP2500	500.00-BLY2ST1	16.00 ck=1	1295	1.132
1_c	MIDPOINX	500.00-DEVERS	500.00 ck=1	SOCALIF	BEP2500	500.00-BLY500	500.00 ck=1	1	1.041
1_c	MIDPOINX	500.00-DEVERS	500.00 ck=1	SOCALIF	MEAD	500.00-MARKETPL	500.00 ck=1	35	1.031
1_c	MNTV-CT1	18.00-MNTVIEW	230.00 ck=1	SOCALIF	PARKER	230.00-HAVASU	230.00 ck=1	38	1.09
1_c	MNTV-CT2	18.00-MNTVIEW	230.00 ck=1	SOCALIF	PARKER	230.00-HAVASU	230.00 ck=1	38	1.09
1_c	MNTV-CT3	18.00-MNTVIEW	230.00 ck=1	SOCALIF	PARKER	230.00-HAVASU	230.00 ck=1	38	1.09
1_c	MNTV-CT4	18.00-MNTVIEW	230.00 ck=1	SOCALIF	PARKER	230.00-HAVASU	230.00 ck=1	38	1.09
1_c	MIDPOINX	500.00-DEVERS	500.00 ck=1	SOCALIF	LIBERTY	345.00-PEACOCK	345.00 ck=1	51	1.009
1_c	MIDPOINX	500.00-DEVERS	500.00 ck=1	SOCALIF	MEAD	500.00-PERKINS	500.00 ck=1	272	1.103
1_c	MNTV-CT1	18.00-MNTVIEW	230.00 ck=1	SOCALIF	MEAD	500.00-PERKINS	500.00 ck=1	272	1.092
1_c	MNTV-CT2	18.00-MNTVIEW	230.00 ck=1	SOCALIF	MEAD	500.00-PERKINS	500.00 ck=1	272	1.092
1_c	MNTV-CT3	18.00-MNTVIEW	230.00 ck=1	SOCALIF	MEAD	500.00-PERKINS	500.00 ck=1	272	1.092
1_c	MNTV-CT4	18.00-MNTVIEW	230.00 ck=1	SOCALIF	MEAD	500.00-PERKINS	500.00 ck=1	272	1.092
1_c	MIDPOINX	500.00-DEVERS	500.00 ck=1	SOCALIF	ELDORDO	500.00-LUGO	500.00 ck=1	303	1.033
1_c	MNTV-CT1	18.00-MNTVIEW	230.00 ck=1	SOCALIF	ELDORDO	500.00-LUGO	500.00 ck=1	303	1.102
1_c	MNTV-CT2	18.00-MNTVIEW	230.00 ck=1	SOCALIF	ELDORDO	500.00-LUGO	500.00 ck=1	303	1.102
1_c	MNTV-CT3	18.00-MNTVIEW	230.00 ck=1	SOCALIF	ELDORDO	500.00-LUGO	500.00 ck=1	303	1.102
1_c	MNTV-CT4	18.00-MNTVIEW	230.00 ck=1	SOCALIF	ELDORDO	500.00-LUGO	500.00 ck=1	303	1.102
1_c	MIDPOINX	500.00-DEVERS	500.00 ck=1	SOCALIF	LUGO	500.00-MOHAVE	500.00 ck=1	333	1.034
1_c	MNTV-CT1	18.00-MNTVIEW	230.00 ck=1	SOCALIF	LUGO	500.00-MOHAVE	500.00 ck=1	333	1.102
1_c	MNTV-CT2	18.00-MNTVIEW	230.00 ck=1	SOCALIF	LUGO	500.00-MOHAVE	500.00 ck=1	333	1.102

Table 4
Lines and Transformer Over Loads Report
w/o PVD2 "Case 1"

1_c	MNTV-CT3	18.00-MNTVIEW	230.00	ck=1	SOCALIF	LUGO	500.00-MOHAVE	500.00	ck=1	333	1.102
1_c	MNTV-CT4	18.00-MNTVIEW	230.00	ck=1	SOCALIF	LUGO	500.00-MOHAVE	500.00	ck=1	333	1.102
1_c	MNTV-CT1	18.00-MNTVIEW	230.00	ck=1	SOCALIF	LUGO	500.00-VINCENT	500.00	ck=1	335	1.089
1_c	MNTV-CT2	18.00-MNTVIEW	230.00	ck=1	SOCALIF	LUGO	500.00-VINCENT	500.00	ck=1	335	1.089
1_c	MNTV-CT3	18.00-MNTVIEW	230.00	ck=1	SOCALIF	LUGO	500.00-VINCENT	500.00	ck=1	335	1.089
1_c	MNTV-CT4	18.00-MNTVIEW	230.00	ck=1	SOCALIF	LUGO	500.00-VINCENT	500.00	ck=1	335	1.089
1_c	MNTV-CT1	18.00-MNTVIEW	230.00	ck=1	SOCALIF	LUGO	500.00-VINCENT	500.00	ck=2	336	1.089
1_c	MNTV-CT2	18.00-MNTVIEW	230.00	ck=1	SOCALIF	LUGO	500.00-VINCENT	500.00	ck=2	336	1.089
1_c	MNTV-CT3	18.00-MNTVIEW	230.00	ck=1	SOCALIF	LUGO	500.00-VINCENT	500.00	ck=2	336	1.089
1_c	MNTV-CT4	18.00-MNTVIEW	230.00	ck=1	SOCALIF	LUGO	500.00-VINCENT	500.00	ck=2	336	1.089
1_c	MIDPOINX	500.00-DEVERS	500.00	ck=1	SOCALIF	MOHAVE	500.00-ELDORDO	500.00	ck=1	355	1.035
1_c	MNTV-CT1	18.00-MNTVIEW	230.00	ck=1	SOCALIF	MOHAVE	500.00-ELDORDO	500.00	ck=1	355	1.094
1_c	MNTV-CT2	18.00-MNTVIEW	230.00	ck=1	SOCALIF	MOHAVE	500.00-ELDORDO	500.00	ck=1	355	1.094
1_c	MNTV-CT3	18.00-MNTVIEW	230.00	ck=1	SOCALIF	MOHAVE	500.00-ELDORDO	500.00	ck=1	355	1.094
1_c	MNTV-CT4	18.00-MNTVIEW	230.00	ck=1	SOCALIF	MOHAVE	500.00-ELDORDO	500.00	ck=1	355	1.094
1_c	SANBRDNO	230.00-DEVERS	230.00	ck=1	SOCALIF	SERRANO	500.00-VALLEYSC	500.00	ck=1	390	1.116
1_c	MNTV-CT1	18.00-MNTVIEW	230.00	ck=1	SOCALIF	SERRANO	500.00-VALLEYSC	500.00	ck=1	390	1.104
1_c	MNTV-CT2	18.00-MNTVIEW	230.00	ck=1	SOCALIF	SERRANO	500.00-VALLEYSC	500.00	ck=1	390	1.104
1_c	MNTV-CT3	18.00-MNTVIEW	230.00	ck=1	SOCALIF	SERRANO	500.00-VALLEYSC	500.00	ck=1	390	1.104
1_c	MNTV-CT4	18.00-MNTVIEW	230.00	ck=1	SOCALIF	SERRANO	500.00-VALLEYSC	500.00	ck=1	390	1.104
1_c	INYO	115.00-INYO PS	115.00	ck=1	SOCALIF	KRAMER	230.00-LUGO	230.00	ck=1	551	1.01
1_c	INYO	115.00-INYO PS	115.00	ck=1	SOCALIF	KRAMER	230.00-LUGO	230.00	ck=2	552	1.01
1_c	INYO	115.00-INYO PS	115.00	ck=1	SOCALIF	CONTROL	115.00-INYOKERN	115.00	ck=1	566	1.029
1_c	INYO	115.00-INYO PS	115.00	ck=1	SOCALIF	CONTROL	115.00-INYOKERN	115.00	ck=2	567	1.029
1_c	INYO	115.00-INYO PS	115.00	ck=1	SOCALIF	INYOKERN	115.00-KRAMER	115.00	ck=1	572	1.039
1_c	SEARLES	115.00-SEARLES	34.50	ck=1	SOCALIF	INYOKERN	115.00-KRAMER	115.00	ck=1	572	1.045
1_c	SANBRDNO	230.00-DEVERS	230.00	ck=1	SOCALIF	DEVERS	500.00-VALLEYSC	500.00	ck=1	601	1.462
1_c	DEVERS	230.00-OAK_VLLY	230.00	ck=1	SOCALIF	DEVERS	500.00-VALLEYSC	500.00	ck=1	601	1.194
1_c	DEVERS	230.00-VSTA	230.00	ck=2	SOCALIF	DEVERS	500.00-VALLEYSC	500.00	ck=1	601	1.148
1_c	VSTA	230.00-DEVERS	230.00	ck=1	SOCALIF	DEVERS	500.00-VALLEYSC	500.00	ck=1	601	1.225
1_c	MNTV-CT1	18.00-MNTVIEW	230.00	ck=1	SOCALIF	DEVERS	500.00-VALLEYSC	500.00	ck=1	601	1.177
1_c	MNTV-CT2	18.00-MNTVIEW	230.00	ck=1	SOCALIF	DEVERS	500.00-VALLEYSC	500.00	ck=1	601	1.177
1_c	MNTV-CT3	18.00-MNTVIEW	230.00	ck=1	SOCALIF	DEVERS	500.00-VALLEYSC	500.00	ck=1	601	1.177
1_c	MNTV-CT4	18.00-MNTVIEW	230.00	ck=1	SOCALIF	DEVERS	500.00-VALLEYSC	500.00	ck=1	601	1.177
1_c	SANBRDNO	230.00-DEVERS	230.00	ck=1	SOCALIF	DEVERS	230.00-OAK_VLLY	230.00	ck=1	603	1.038
1_c	MIDPOINX	500.00-DEVERS	500.00	ck=1	SOCALIF	MOENKOPI	500.00-ELDORDO	500.00	ck=1	705	1.051
1_c	MNTV-CT1	18.00-MNTVIEW	230.00	ck=1	SOCALIF	MOENKOPI	500.00-ELDORDO	500.00	ck=1	705	1.092

Table 4
Lines and Transformer Over Loads Report
w/o PVD2 "Case 1"

1_c	MNTV-CT2 18.00-MNTVIEW 230.00 ck=1	SOCALIF	MOENKOPI 500.00-ELDORDO 500.00 ck=1	705	1.092
1_c	MNTV-CT3 18.00-MNTVIEW 230.00 ck=1	SOCALIF	MOENKOPI 500.00-ELDORDO 500.00 ck=1	705	1.092
1_c	MNTV-CT4 18.00-MNTVIEW 230.00 ck=1	SOCALIF	MOENKOPI 500.00-ELDORDO 500.00 ck=1	705	1.092
1_c	ELDORDO 500.00-LUGO 500.00 ck=1	SOCALIF	LUGO 500.00-VICTORVL 500.00 ck=1	723	1.033
1_c	LUGO 500.00-MOHAVE 500.00 ck=1	SOCALIF	LUGO 500.00-VICTORVL 500.00 ck=1	723	1.046
1_c	MIDPOINX 500.00-DEVERS 500.00 ck=1	SOCALIF	LUGO 500.00-VICTORVL 500.00 ck=1	723	1.049
1_c	MNTV-CT1 18.00-MNTVIEW 230.00 ck=1	SOCALIF	LUGO 500.00-VICTORVL 500.00 ck=1	723	1.091
1_c	MNTV-CT2 18.00-MNTVIEW 230.00 ck=1	SOCALIF	LUGO 500.00-VICTORVL 500.00 ck=1	723	1.091
1_c	MNTV-CT3 18.00-MNTVIEW 230.00 ck=1	SOCALIF	LUGO 500.00-VICTORVL 500.00 ck=1	723	1.091
1_c	MNTV-CT4 18.00-MNTVIEW 230.00 ck=1	SOCALIF	LUGO 500.00-VICTORVL 500.00 ck=1	723	1.091
1_c	INYO 115.00-INYO PS 115.00 ck=1	SOCALIF	OWENSCON 230.00-INYO 230.00 ck=1	727	1.329
1_c	ELDORDO 500.00-LUGO 500.00 ck=1	SOCALIF	PALOVRDE 500.00-MIDPOINX 500.00 ck=1	748	1.007
1_c	LUGO 500.00-MOHAVE 500.00 ck=1	SOCALIF	PALOVRDE 500.00-MIDPOINX 500.00 ck=1	748	1.018
1_c	MIDPOINX 500.00-DEVERS 500.00 ck=1	SOCALIF	LIBERTY 345.00-LIBTYPHS 230.00 ck=1	780	1.008
1_c	MIDPOINX 500.00-DEVERS 500.00 ck=1	SOCALIF	LIBTYPHS 230.00-LIBERTY 230.00 ck=1	781	1.008
1_c	EAGLROCK 230.00-EAGLROCK 66.00 ck=4	SOCALIF	EAGLROCK 230.00-EAGLROCK 66.00 ck=3	936	1.039
1_c	EAGLROCK 230.00-EAGLROCK 66.00 ck=3	SOCALIF	EAGLROCK 230.00-EAGLROCK 66.00 ck=4	937	1.032
1_c	EL NIDO 230.00-EL NIDO 66.00 ck=3	SOCALIF	EL NIDO 230.00-EL NIDO 66.00 ck=1	938	1.424
1_c	EL NIDO 230.00-EL NIDO 66.00 ck=1	SOCALIF	EL NIDO 230.00-EL NIDO 66.00 ck=3	939	1.426
1_c	LCIENEGA 230.00-LCIENEGA 66.00 ck=4	SOCALIF	LCIENEGA 230.00-LCIENEGA 66.00 ck=3	998	1.071
1_c	LCIENEGA 230.00-LCIENEGA 66.00 ck=3	SOCALIF	LCIENEGA 230.00-LCIENEGA 66.00 ck=4	999	1.101
1_c	S.CLARA 230.00-S.CLARA 66.00 ck=4	SOCALIF	S.CLARA 230.00-S.CLARA 66.00 ck=2	1046	1.083
1_c	S.CLARA 230.00-S.CLARA 66.00 ck=2	SOCALIF	S.CLARA 230.00-S.CLARA 66.00 ck=4	1047	1.035
1_c	MNTV-CT2 18.00-MNTVIEW 230.00 ck=1	SOCALIF	MNTV-CT1 18.00-MNTVIEW 230.00 ck=1	1284	1.091
1_c	MNTV-CT3 18.00-MNTVIEW 230.00 ck=1	SOCALIF	MNTV-CT1 18.00-MNTVIEW 230.00 ck=1	1284	1.091
1_c	MNTV-CT4 18.00-MNTVIEW 230.00 ck=1	SOCALIF	MNTV-CT1 18.00-MNTVIEW 230.00 ck=1	1284	1.091
1_c	MNTV-CT1 18.00-MNTVIEW 230.00 ck=1	SOCALIF	MNTV-CT2 18.00-MNTVIEW 230.00 ck=1	1285	1.091
1_c	MNTV-CT3 18.00-MNTVIEW 230.00 ck=1	SOCALIF	MNTV-CT2 18.00-MNTVIEW 230.00 ck=1	1285	1.091
1_c	MNTV-CT4 18.00-MNTVIEW 230.00 ck=1	SOCALIF	MNTV-CT2 18.00-MNTVIEW 230.00 ck=1	1285	1.091
1_c	MNTV-CT1 18.00-MNTVIEW 230.00 ck=1	SOCALIF	MNTV-ST1 18.00-MNTVIEW 230.00 ck=1	1286	1.106
1_c	MNTV-CT2 18.00-MNTVIEW 230.00 ck=1	SOCALIF	MNTV-ST1 18.00-MNTVIEW 230.00 ck=1	1286	1.106
1_c	MNTV-CT3 18.00-MNTVIEW 230.00 ck=1	SOCALIF	MNTV-ST1 18.00-MNTVIEW 230.00 ck=1	1286	1.106
1_c	MNTV-CT4 18.00-MNTVIEW 230.00 ck=1	SOCALIF	MNTV-ST1 18.00-MNTVIEW 230.00 ck=1	1286	1.106
1_c	MNTV-CT1 18.00-MNTVIEW 230.00 ck=1	SOCALIF	MNTV-CT3 18.00-MNTVIEW 230.00 ck=1	1287	1.091
1_c	MNTV-CT2 18.00-MNTVIEW 230.00 ck=1	SOCALIF	MNTV-CT3 18.00-MNTVIEW 230.00 ck=1	1287	1.091
1_c	MNTV-CT4 18.00-MNTVIEW 230.00 ck=1	SOCALIF	MNTV-CT3 18.00-MNTVIEW 230.00 ck=1	1287	1.091
1_c	MNTV-CT1 18.00-MNTVIEW 230.00 ck=1	SOCALIF	MNTV-CT4 18.00-MNTVIEW 230.00 ck=1	1288	1.091

Table 4
Lines and Transformer Over Loads Report
w/o PVD2 "Case 1"

1_c	MNTV-CT2	18.00-MNTVIEW	230.00 ck=1	SOCALIF	MNTV-CT4	18.00-MNTVIEW	230.00 ck=1	1288	1.091
1_c	MNTV-CT3	18.00-MNTVIEW	230.00 ck=1	SOCALIF	MNTV-CT4	18.00-MNTVIEW	230.00 ck=1	1288	1.091
1_c	MNTV-CT1	18.00-MNTVIEW	230.00 ck=1	SOCALIF	MNTV-ST2	18.00-MNTVIEW	230.00 ck=1	1289	1.106
1_c	MNTV-CT2	18.00-MNTVIEW	230.00 ck=1	SOCALIF	MNTV-ST2	18.00-MNTVIEW	230.00 ck=1	1289	1.106
1_c	MNTV-CT3	18.00-MNTVIEW	230.00 ck=1	SOCALIF	MNTV-ST2	18.00-MNTVIEW	230.00 ck=1	1289	1.106
1_c	MNTV-CT4	18.00-MNTVIEW	230.00 ck=1	SOCALIF	MNTV-ST2	18.00-MNTVIEW	230.00 ck=1	1289	1.106
1_c	MIDPOINX	500.00-DEVERS	500.00 ck=1	SOCALIF	BLY500	500.00-BUCKBLVD	161.00 ck=1	1297	1.015
1_d	MIDPOINX	500.00-DEVERS	500.00 ck=1	SOCALIF	MEAD	500.00-MARKETPL	500.00 ck=1	35	1.128
1_d	MIDPOINX	500.00-DEVERS	500.00 ck=1	SOCALIF	PARKER	230.00-HAVASU	230.00 ck=1	38	1.095
1_d	MNTV-CT1	18.00-MNTVIEW	230.00 ck=1	SOCALIF	PARKER	230.00-HAVASU	230.00 ck=1	38	1.134
1_d	MNTV-CT2	18.00-MNTVIEW	230.00 ck=1	SOCALIF	PARKER	230.00-HAVASU	230.00 ck=1	38	1.134
1_d	MNTV-CT3	18.00-MNTVIEW	230.00 ck=1	SOCALIF	PARKER	230.00-HAVASU	230.00 ck=1	38	1.134
1_d	MNTV-CT4	18.00-MNTVIEW	230.00 ck=1	SOCALIF	PARKER	230.00-HAVASU	230.00 ck=1	38	1.134
1_d	MIDPOINX	500.00-DEVERS	500.00 ck=1	SOCALIF	LIBERTY	345.00-PEACOCK	345.00 ck=1	51	1.102
1_d	MIDPOINX	500.00-DEVERS	500.00 ck=1	SOCALIF	PEACOCK	345.00-MEAD	345.00 ck=1	73	1.095
1_d	MIDPOINX	500.00-DEVERS	500.00 ck=1	SOCALIF	MEAD	500.00-PERKINS	500.00 ck=1	272	1.198
1_d	MNTV-CT1	18.00-MNTVIEW	230.00 ck=1	SOCALIF	MEAD	500.00-PERKINS	500.00 ck=1	272	1.137
1_d	MNTV-CT2	18.00-MNTVIEW	230.00 ck=1	SOCALIF	MEAD	500.00-PERKINS	500.00 ck=1	272	1.137
1_d	MNTV-CT3	18.00-MNTVIEW	230.00 ck=1	SOCALIF	MEAD	500.00-PERKINS	500.00 ck=1	272	1.137
1_d	MNTV-CT4	18.00-MNTVIEW	230.00 ck=1	SOCALIF	MEAD	500.00-PERKINS	500.00 ck=1	272	1.137
1_d	MIDPOINX	500.00-DEVERS	500.00 ck=1	SOCALIF	ELDORDO	500.00-LUGO	500.00 ck=1	303	1.13
1_d	MNTV-CT1	18.00-MNTVIEW	230.00 ck=1	SOCALIF	ELDORDO	500.00-LUGO	500.00 ck=1	303	1.146
1_d	MNTV-CT2	18.00-MNTVIEW	230.00 ck=1	SOCALIF	ELDORDO	500.00-LUGO	500.00 ck=1	303	1.146
1_d	MNTV-CT3	18.00-MNTVIEW	230.00 ck=1	SOCALIF	ELDORDO	500.00-LUGO	500.00 ck=1	303	1.146
1_d	MNTV-CT4	18.00-MNTVIEW	230.00 ck=1	SOCALIF	ELDORDO	500.00-LUGO	500.00 ck=1	303	1.146
1_d	MIDPOINX	500.00-DEVERS	500.00 ck=1	SOCALIF	LUGO	500.00-MIRALOMA	500.00 ck=2	331	1.092
1_d	MIDPOINX	500.00-DEVERS	500.00 ck=1	SOCALIF	LUGO	500.00-MIRALOMA	500.00 ck=3	332	1.092
1_d	MIDPOINX	500.00-DEVERS	500.00 ck=1	SOCALIF	LUGO	500.00-MOHAVE	500.00 ck=1	333	1.131
1_d	MNTV-CT1	18.00-MNTVIEW	230.00 ck=1	SOCALIF	LUGO	500.00-MOHAVE	500.00 ck=1	333	1.146
1_d	MNTV-CT2	18.00-MNTVIEW	230.00 ck=1	SOCALIF	LUGO	500.00-MOHAVE	500.00 ck=1	333	1.146
1_d	MNTV-CT3	18.00-MNTVIEW	230.00 ck=1	SOCALIF	LUGO	500.00-MOHAVE	500.00 ck=1	333	1.146
1_d	MNTV-CT4	18.00-MNTVIEW	230.00 ck=1	SOCALIF	LUGO	500.00-MOHAVE	500.00 ck=1	333	1.146
1_d	MIDPOINX	500.00-DEVERS	500.00 ck=1	SOCALIF	LUGO	500.00-MIRALOMA	500.00 ck=1	334	1.09
1_d	MIDPOINX	500.00-DEVERS	500.00 ck=1	SOCALIF	MOHAVE	500.00-ELDORDO	500.00 ck=1	355	1.131
1_d	MNTV-CT1	18.00-MNTVIEW	230.00 ck=1	SOCALIF	MOHAVE	500.00-ELDORDO	500.00 ck=1	355	1.138
1_d	MNTV-CT2	18.00-MNTVIEW	230.00 ck=1	SOCALIF	MOHAVE	500.00-ELDORDO	500.00 ck=1	355	1.138
1_d	MNTV-CT3	18.00-MNTVIEW	230.00 ck=1	SOCALIF	MOHAVE	500.00-ELDORDO	500.00 ck=1	355	1.138

Table 4
Lines and Transformer Over Loads Report
w/o PVD2 "Case 1"

1_d	MNTV-CT4 18.00-MNTVIEW 230.00 ck=1	SOCALIF	MOHAVE 500.00-ELDORDO 500.00 ck=1	355	1.138
1_d	MNTV-CT1 18.00-MNTVIEW 230.00 ck=1	SOCALIF	SERRANO 500.00-VALLEYSC 500.00 ck=1	390	1.136
1_d	MNTV-CT2 18.00-MNTVIEW 230.00 ck=1	SOCALIF	SERRANO 500.00-VALLEYSC 500.00 ck=1	390	1.136
1_d	MNTV-CT3 18.00-MNTVIEW 230.00 ck=1	SOCALIF	SERRANO 500.00-VALLEYSC 500.00 ck=1	390	1.136
1_d	MNTV-CT4 18.00-MNTVIEW 230.00 ck=1	SOCALIF	SERRANO 500.00-VALLEYSC 500.00 ck=1	390	1.136
1_d	BIG CRK3 230.00-RECTOR 230.00 ck=1	SOCALIF	BIG CRK1 230.00-RECTOR 230.00 ck=1	409	1.036
1_d	BIG CRK1 230.00-RECTOR 230.00 ck=1	SOCALIF	BIG CRK3 230.00-RECTOR 230.00 ck=1	414	1.044
1_d	INYO 115.00-INYO PS 115.00 ck=1	SOCALIF	KRAMER 230.00-LUGO 230.00 ck=1	551	1.027
1_d	INYO 115.00-INYO PS 115.00 ck=1	SOCALIF	KRAMER 230.00-LUGO 230.00 ck=2	552	1.027
1_d	INYO 115.00-INYO PS 115.00 ck=1	SOCALIF	CONTROL 115.00-INYOKERN 115.00 ck=1	566	1.056
1_d	INYO 115.00-INYO PS 115.00 ck=1	SOCALIF	CONTROL 115.00-INYOKERN 115.00 ck=2	567	1.056
1_d	INYO 115.00-INYO PS 115.00 ck=1	SOCALIF	INYOKERN 115.00-KRAMER 115.00 ck=1	572	1.064
1_d	SEARLES 115.00-SEARLES 34.50 ck=1	SOCALIF	INYOKERN 115.00-KRAMER 115.00 ck=1	572	1.137
1_d	INYO 115.00-INYO PS 115.00 ck=1	SOCALIF	TAP701 115.00-INYOKERN 115.00 ck=1	583	1.001
1_d	SANBRDNO 230.00-DEVERS 230.00 ck=1	SOCALIF	DEVERS 500.00-VALLEYSC 500.00 ck=1	601	1.249
1_d	DEVERS 230.00-OAK_VLLY 230.00 ck=1	SOCALIF	DEVERS 500.00-VALLEYSC 500.00 ck=1	601	1.036
1_d	DEVERS 230.00-VSTA 230.00 ck=2	SOCALIF	DEVERS 500.00-VALLEYSC 500.00 ck=1	601	1
1_d	VSTA 230.00-DEVERS 230.00 ck=1	SOCALIF	DEVERS 500.00-VALLEYSC 500.00 ck=1	601	1.067
1_d	MNTV-CT1 18.00-MNTVIEW 230.00 ck=1	SOCALIF	DEVERS 500.00-VALLEYSC 500.00 ck=1	601	1.187
1_d	MNTV-CT2 18.00-MNTVIEW 230.00 ck=1	SOCALIF	DEVERS 500.00-VALLEYSC 500.00 ck=1	601	1.187
1_d	MNTV-CT3 18.00-MNTVIEW 230.00 ck=1	SOCALIF	DEVERS 500.00-VALLEYSC 500.00 ck=1	601	1.187
1_d	MNTV-CT4 18.00-MNTVIEW 230.00 ck=1	SOCALIF	DEVERS 500.00-VALLEYSC 500.00 ck=1	601	1.187
1_d	MIDPOINX 500.00-DEVERS 500.00 ck=1	SOCALIF	INDIGO 115.00-TAP817 115.00 ck=1	640	1.087
1_d	CAL ELEC 115.00-SHANDIN 115.00 ck=1	SOCALIF	CAL ELEC 115.00-TAP901 115.00 ck=1	654	1.015
1_d	MIDPOINX 500.00-DEVERS 500.00 ck=1	SOCALIF	J.HINDS 230.00-MIRAGE 230.00 ck=1	665	1.102
1_d	MIDPOINX 500.00-DEVERS 500.00 ck=1	SOCALIF	J.HINDS 230.00-EAGLEMTN 230.00 ck=1	666	1.102
1_d	MIDPOINX 500.00-DEVERS 500.00 ck=1	SOCALIF	MOENKOPI 500.00-ELDORDO 500.00 ck=1	705	1.144
1_d	MNTV-CT1 18.00-MNTVIEW 230.00 ck=1	SOCALIF	MOENKOPI 500.00-ELDORDO 500.00 ck=1	705	1.136
1_d	MNTV-CT2 18.00-MNTVIEW 230.00 ck=1	SOCALIF	MOENKOPI 500.00-ELDORDO 500.00 ck=1	705	1.136
1_d	MNTV-CT3 18.00-MNTVIEW 230.00 ck=1	SOCALIF	MOENKOPI 500.00-ELDORDO 500.00 ck=1	705	1.136
1_d	MNTV-CT4 18.00-MNTVIEW 230.00 ck=1	SOCALIF	MOENKOPI 500.00-ELDORDO 500.00 ck=1	705	1.136
1_d	MIDPOINX 500.00-DEVERS 500.00 ck=1	SOCALIF	BLYTHE 161.00-BLYTHESC 161.00 ck=1	719	1.084
1_d	ELDORDO 500.00-LUGO 500.00 ck=1	SOCALIF	LUGO 500.00-VICTORVL 500.00 ck=1	723	1.035
1_d	LUGO 500.00-MOHAVE 500.00 ck=1	SOCALIF	LUGO 500.00-VICTORVL 500.00 ck=1	723	1.047
1_d	MIDPOINX 500.00-DEVERS 500.00 ck=1	SOCALIF	LUGO 500.00-VICTORVL 500.00 ck=1	723	1.148
1_d	MNTV-CT1 18.00-MNTVIEW 230.00 ck=1	SOCALIF	LUGO 500.00-VICTORVL 500.00 ck=1	723	1.136
1_d	MNTV-CT2 18.00-MNTVIEW 230.00 ck=1	SOCALIF	LUGO 500.00-VICTORVL 500.00 ck=1	723	1.136

Table 4
Lines and Transformer Over Loads Report
w/o PVD2 "Case 1"

1_d	MNTV-CT3 18.00-MNTVIEW 230.00 ck=1	SOCALIF	LUGO 500.00-VICTORVL 500.00 ck=1	723	1.136
1_d	MNTV-CT4 18.00-MNTVIEW 230.00 ck=1	SOCALIF	LUGO 500.00-VICTORVL 500.00 ck=1	723	1.136
1_d	INYO 115.00-INYO PS 115.00 ck=1	SOCALIF	INYO 230.00-COTTONWD 230.00 ck=1	726	1.553
1_d	SEARLES 115.00-SEARLES 34.50 ck=1	SOCALIF	INYO 230.00-COTTONWD 230.00 ck=1	726	1.175
1_d	INYO 115.00-INYO PS 115.00 ck=1	SOCALIF	OWENSCON 230.00-INYO 230.00 ck=1	727	1.339
1_d	BLYTHESC 161.00-EAGLEMTN 161.00 ck=1	SOCALIF	PALOVRDE 500.00-MIDPOINX 500.00 ck=1	748	1.021
1_d	ELDORDO 500.00-LUGO 500.00 ck=1	SOCALIF	PALOVRDE 500.00-MIDPOINX 500.00 ck=1	748	1.047
1_d	LUGO 500.00-MOHAVE 500.00 ck=1	SOCALIF	PALOVRDE 500.00-MIDPOINX 500.00 ck=1	748	1.059
1_d	J.HINDS 230.00-MIRAGE 230.00 ck=1	SOCALIF	PALOVRDE 500.00-MIDPOINX 500.00 ck=1	748	1.046
1_d	J.HINDS 230.00-EAGLEMTN 230.00 ck=1	SOCALIF	PALOVRDE 500.00-MIDPOINX 500.00 ck=1	748	1.044
1_d	LUGO 500.00-VICTORVL 500.00 ck=1	SOCALIF	PALOVRDE 500.00-MIDPOINX 500.00 ck=1	748	1.02
1_d	BLYTHESC 161.00-EAGLEMTN 161.00 ck=1	SOCALIF	MIDPOINX 500.00-DEVERS 500.00 ck=1	749	1.019
1_d	ELDORDO 500.00-LUGO 500.00 ck=1	SOCALIF	MIDPOINX 500.00-DEVERS 500.00 ck=1	749	1.05
1_d	LUGO 500.00-MOHAVE 500.00 ck=1	SOCALIF	MIDPOINX 500.00-DEVERS 500.00 ck=1	749	1.062
1_d	J.HINDS 230.00-MIRAGE 230.00 ck=1	SOCALIF	MIDPOINX 500.00-DEVERS 500.00 ck=1	749	1.042
1_d	J.HINDS 230.00-EAGLEMTN 230.00 ck=1	SOCALIF	MIDPOINX 500.00-DEVERS 500.00 ck=1	749	1.04
1_d	LUGO 500.00-VICTORVL 500.00 ck=1	SOCALIF	MIDPOINX 500.00-DEVERS 500.00 ck=1	749	1.022
1_d	MNTV-CT1 18.00-MNTVIEW 230.00 ck=1	SOCALIF	MIDPOINX 500.00-DEVERS 500.00 ck=1	749	1.139
1_d	MNTV-CT2 18.00-MNTVIEW 230.00 ck=1	SOCALIF	MIDPOINX 500.00-DEVERS 500.00 ck=1	749	1.139
1_d	MNTV-CT3 18.00-MNTVIEW 230.00 ck=1	SOCALIF	MIDPOINX 500.00-DEVERS 500.00 ck=1	749	1.139
1_d	MNTV-CT4 18.00-MNTVIEW 230.00 ck=1	SOCALIF	MIDPOINX 500.00-DEVERS 500.00 ck=1	749	1.139
1_d	MIDPOINX 500.00-DEVERS 500.00 ck=1	SOCALIF	MEAD 345.00-MEAD N 230.00 ck=1	774	1.094
1_d	MIDPOINX 500.00-DEVERS 500.00 ck=1	SOCALIF	LIBERTY 345.00-LIBTYPHS 230.00 ck=1	780	1.102
1_d	MIDPOINX 500.00-DEVERS 500.00 ck=1	SOCALIF	LIBTYPHS 230.00-LIBERTY 230.00 ck=1	781	1.102
1_d	EAGLROCK 230.00-EAGLROCK 66.00 ck=4	SOCALIF	EAGLROCK 230.00-EAGLROCK 66.00 ck=3	936	1.039
1_d	EAGLROCK 230.00-EAGLROCK 66.00 ck=3	SOCALIF	EAGLROCK 230.00-EAGLROCK 66.00 ck=4	937	1.032
1_d	EL NIDO 230.00-EL NIDO 66.00 ck=3	SOCALIF	EL NIDO 230.00-EL NIDO 66.00 ck=1	938	1.424
1_d	EL NIDO 230.00-EL NIDO 66.00 ck=1	SOCALIF	EL NIDO 230.00-EL NIDO 66.00 ck=3	939	1.425
1_d	LCIENEGA 230.00-LCIENEGA 66.00 ck=4	SOCALIF	LCIENEGA 230.00-LCIENEGA 66.00 ck=3	998	1.071
1_d	LCIENEGA 230.00-LCIENEGA 66.00 ck=3	SOCALIF	LCIENEGA 230.00-LCIENEGA 66.00 ck=4	999	1.101
1_d	S.CLARA 230.00-S.CLARA 66.00 ck=4	SOCALIF	S.CLARA 230.00-S.CLARA 66.00 ck=2	1046	1.064
1_d	S.CLARA 230.00-S.CLARA 66.00 ck=2	SOCALIF	S.CLARA 230.00-S.CLARA 66.00 ck=4	1047	1.018
1_d	MNTV-CT2 18.00-MNTVIEW 230.00 ck=1	SOCALIF	MNTV-CT1 18.00-MNTVIEW 230.00 ck=1	1284	1.134
1_d	MNTV-CT3 18.00-MNTVIEW 230.00 ck=1	SOCALIF	MNTV-CT1 18.00-MNTVIEW 230.00 ck=1	1284	1.134
1_d	MNTV-CT4 18.00-MNTVIEW 230.00 ck=1	SOCALIF	MNTV-CT1 18.00-MNTVIEW 230.00 ck=1	1284	1.134
1_d	MNTV-CT1 18.00-MNTVIEW 230.00 ck=1	SOCALIF	MNTV-CT2 18.00-MNTVIEW 230.00 ck=1	1285	1.134
1_d	MNTV-CT3 18.00-MNTVIEW 230.00 ck=1	SOCALIF	MNTV-CT2 18.00-MNTVIEW 230.00 ck=1	1285	1.134

Table 4
Lines and Transformer Over Loads Report
w/o PVD2 "Case 1"

1_d	MNTV-CT4	18.00-MNTVIEW	230.00 ck=1	SOCALIF	MNTV-CT2	18.00-MNTVIEW	230.00 ck=1	1285	1.134
1_d	MNTV-CT1	18.00-MNTVIEW	230.00 ck=1	SOCALIF	MNTV-ST1	18.00-MNTVIEW	230.00 ck=1	1286	1.148
1_d	MNTV-CT2	18.00-MNTVIEW	230.00 ck=1	SOCALIF	MNTV-ST1	18.00-MNTVIEW	230.00 ck=1	1286	1.148
1_d	MNTV-CT3	18.00-MNTVIEW	230.00 ck=1	SOCALIF	MNTV-ST1	18.00-MNTVIEW	230.00 ck=1	1286	1.148
1_d	MNTV-CT4	18.00-MNTVIEW	230.00 ck=1	SOCALIF	MNTV-ST1	18.00-MNTVIEW	230.00 ck=1	1286	1.148
1_d	MNTV-CT1	18.00-MNTVIEW	230.00 ck=1	SOCALIF	MNTV-CT3	18.00-MNTVIEW	230.00 ck=1	1287	1.134
1_d	MNTV-CT2	18.00-MNTVIEW	230.00 ck=1	SOCALIF	MNTV-CT3	18.00-MNTVIEW	230.00 ck=1	1287	1.134
1_d	MNTV-CT4	18.00-MNTVIEW	230.00 ck=1	SOCALIF	MNTV-CT3	18.00-MNTVIEW	230.00 ck=1	1287	1.134
1_d	MNTV-CT1	18.00-MNTVIEW	230.00 ck=1	SOCALIF	MNTV-CT4	18.00-MNTVIEW	230.00 ck=1	1288	1.134
1_d	MNTV-CT2	18.00-MNTVIEW	230.00 ck=1	SOCALIF	MNTV-CT4	18.00-MNTVIEW	230.00 ck=1	1288	1.134
1_d	MNTV-CT3	18.00-MNTVIEW	230.00 ck=1	SOCALIF	MNTV-CT4	18.00-MNTVIEW	230.00 ck=1	1288	1.134
1_d	MNTV-CT1	18.00-MNTVIEW	230.00 ck=1	SOCALIF	MNTV-ST2	18.00-MNTVIEW	230.00 ck=1	1289	1.148
1_d	MNTV-CT2	18.00-MNTVIEW	230.00 ck=1	SOCALIF	MNTV-ST2	18.00-MNTVIEW	230.00 ck=1	1289	1.148
1_d	MNTV-CT3	18.00-MNTVIEW	230.00 ck=1	SOCALIF	MNTV-ST2	18.00-MNTVIEW	230.00 ck=1	1289	1.148
1_d	MNTV-CT4	18.00-MNTVIEW	230.00 ck=1	SOCALIF	MNTV-ST2	18.00-MNTVIEW	230.00 ck=1	1289	1.148
1_a	HASSYAMP	500.00-N.GILA	500.00 ck=1	SANDIEGO	MEAD	500.00-PERKINS	500.00 ck=1	272	1.016
1_a	HASSYAMP	500.00-N.GILA	500.00 ck=1	SANDIEGO	DEVERS	500.00-VALLEYSC	500.00 ck=1	601	1.059
1_a	HASSYAMP	500.00-N.GILA	500.00 ck=1	SANDIEGO	PALOVRDE	500.00-MIDPOINX	500.00 ck=1	748	1.296
1_a	HASSYAMP	500.00-N.GILA	500.00 ck=1	SANDIEGO	MIDPOINX	500.00-DEVERS	500.00 ck=1	749	1.263
1_a	HASSYAMP	500.00-N.GILA	500.00 ck=1	SANDIEGO	S.ONOFRE	230.00-S.ONOFR2	22.00 ck=1	1048	1.024
1_a	HASSYAMP	500.00-N.GILA	500.00 ck=1	SANDIEGO	S.ONOFRE	230.00-S.ONOFR3	22.00 ck=1	1049	1.034
1_b	HASSYAMP	500.00-N.GILA	500.00 ck=1	SANDIEGO	MEAD	500.00-PERKINS	500.00 ck=1	272	1.035
1_b	HASSYAMP	500.00-N.GILA	500.00 ck=1	SANDIEGO	SERRANO	500.00-VALLEYSC	500.00 ck=1	390	1.015
1_b	HASSYAMP	500.00-N.GILA	500.00 ck=1	SANDIEGO	DEVERS	500.00-VALLEYSC	500.00 ck=1	601	1.08
1_b	HASSYAMP	500.00-N.GILA	500.00 ck=1	SANDIEGO	MOENKOPI	500.00-ELDORDO	500.00 ck=1	705	1.007
1_b	HASSYAMP	500.00-N.GILA	500.00 ck=1	SANDIEGO	PALOVRDE	500.00-MIDPOINX	500.00 ck=1	748	1.297
1_b	HASSYAMP	500.00-N.GILA	500.00 ck=1	SANDIEGO	MIDPOINX	500.00-DEVERS	500.00 ck=1	749	1.346
1_b	HASSYAMP	500.00-N.GILA	500.00 ck=1	SANDIEGO	S.ONOFRE	230.00-S.ONOFR2	22.00 ck=1	1048	1.042
1_b	HASSYAMP	500.00-N.GILA	500.00 ck=1	SANDIEGO	S.ONOFRE	230.00-S.ONOFR3	22.00 ck=1	1049	1.052
1_c	HASSYAMP	500.00-N.GILA	500.00 ck=1	SANDIEGO	DEVERS	500.00-VALLEYSC	500.00 ck=1	601	1.04
1_c	HASSYAMP	500.00-N.GILA	500.00 ck=1	SANDIEGO	PALOVRDE	500.00-MIDPOINX	500.00 ck=1	748	1.289
1_c	HASSYAMP	500.00-N.GILA	500.00 ck=1	SANDIEGO	S.ONOFRE	230.00-S.ONOFR2	22.00 ck=1	1048	1.003
1_c	HASSYAMP	500.00-N.GILA	500.00 ck=1	SANDIEGO	S.ONOFRE	230.00-S.ONOFR3	22.00 ck=1	1049	1.013
1_d	HASSYAMP	500.00-N.GILA	500.00 ck=1	SANDIEGO	PALOVRDE	500.00-MIDPOINX	500.00 ck=1	748	1.279
1_d	HASSYAMP	500.00-N.GILA	500.00 ck=1	SANDIEGO	MIDPOINX	500.00-DEVERS	500.00 ck=1	749	1.282
1_a	NAVAJO	500.00-CRYSTAL	500.00 ck=1	LADWP	MEAD	500.00-PERKINS	500.00 ck=1	272	1.049
1_a	NAVAJO	500.00-CRYSTAL	500.00 ck=1	LADWP	MOENKOPI	500.00-ELDORDO	500.00 ck=1	705	1.277

Table 4
Lines and Transformer Over Loads Report
w/o PVD2 "Case 1"

1_a	NAVAJO 500.00-CRYSTAL 500.00 ck=1	LADWP	PALOVRDE 500.00-MIDPOINX 500.00 ck=1	748	1.095
1_a	NAVAJO 500.00-CRYSTAL 500.00 ck=1	LADWP	MIDPOINX 500.00-DEVERS 500.00 ck=1	749	1.076
1_b	NAVAJO 500.00-CRYSTAL 500.00 ck=1	LADWP	MEAD 500.00-PERKINS 500.00 ck=1	272	1.069
1_b	NAVAJO 500.00-CRYSTAL 500.00 ck=1	LADWP	MOENKOPI 500.00-ELDORDO 500.00 ck=1	705	1.308
1_b	NAVAJO 500.00-CRYSTAL 500.00 ck=1	LADWP	PALOVRDE 500.00-MIDPOINX 500.00 ck=1	748	1.1
1_b	NAVAJO 500.00-CRYSTAL 500.00 ck=1	LADWP	MIDPOINX 500.00-DEVERS 500.00 ck=1	749	1.145
1_c	NAVAJO 500.00-CRYSTAL 500.00 ck=1	LADWP	MEAD 500.00-PERKINS 500.00 ck=1	272	1.053
1_c	NAVAJO 500.00-CRYSTAL 500.00 ck=1	LADWP	MOENKOPI 500.00-ELDORDO 500.00 ck=1	705	1.281
1_c	NAVAJO 500.00-CRYSTAL 500.00 ck=1	LADWP	PALOVRDE 500.00-MIDPOINX 500.00 ck=1	748	1.111
1_d	NAVAJO 500.00-CRYSTAL 500.00 ck=1	LADWP	MEAD 500.00-PERKINS 500.00 ck=1	272	1.029
1_d	NAVAJO 500.00-CRYSTAL 500.00 ck=1	LADWP	MOENKOPI 500.00-ELDORDO 500.00 ck=1	705	1.243
1_d	NAVAJO 500.00-CRYSTAL 500.00 ck=1	LADWP	PALOVRDE 500.00-MIDPOINX 500.00 ck=1	748	1.128
1_d	NAVAJO 500.00-CRYSTAL 500.00 ck=1	LADWP	MIDPOINX 500.00-DEVERS 500.00 ck=1	749	1.129
1_a	DROP3 34.50-DROP3 6.90 ck=1	IID	DROP3 92.00-DROP4 92.00 ck=1	159	1.407
1_a	DROP3 34.50-DROP3 6.90 ck=1	IID	DROP3 92.00-DROP3 6.90 ck=1	844	1.407
1_a	MIDWAY x 230.00-MIDWAY 92.00 ck=2	IID	MIDWAY x 230.00-MIDWAY 92.00 ck=1	876	1.32
1_a	MIDWAY x 230.00-MIDWAY 92.00 ck=1	IID	MIDWAY x 230.00-MIDWAY 92.00 ck=2	877	1.32
1_b	DROP3 34.50-DROP3 6.90 ck=1	IID	DROP3 92.00-DROP4 92.00 ck=1	159	1.407
1_b	DROP3 34.50-DROP3 6.90 ck=1	IID	DROP3 92.00-DROP3 6.90 ck=1	844	1.407
1_b	MIDWAY x 230.00-MIDWAY 92.00 ck=2	IID	MIDWAY x 230.00-MIDWAY 92.00 ck=1	876	1.318
1_b	MIDWAY x 230.00-MIDWAY 92.00 ck=1	IID	MIDWAY x 230.00-MIDWAY 92.00 ck=2	877	1.318
1_c	DROP3 34.50-DROP3 6.90 ck=1	IID	DROP3 92.00-DROP4 92.00 ck=1	159	1.407
1_c	DROP3 34.50-DROP3 6.90 ck=1	IID	DROP3 92.00-DROP3 6.90 ck=1	844	1.407
1_c	MIDWAY x 230.00-MIDWAY 92.00 ck=2	IID	MIDWAY x 230.00-MIDWAY 92.00 ck=1	876	1.319
1_c	MIDWAY x 230.00-MIDWAY 92.00 ck=1	IID	MIDWAY x 230.00-MIDWAY 92.00 ck=2	877	1.319
1_d	DROP3 34.50-DROP3 6.90 ck=1	IID	DROP3 92.00-DROP4 92.00 ck=1	159	1.407
1_d	NILAND 161.00-BLYTHE 161.00 ck=1	IID	BLYTHESC 161.00-EAGLEMTN 161.00 ck=1	284	1.04
1_d	NILAND 161.00-BLYTHE 161.00 ck=1	IID	BLYTHE 161.00-BLYTHESC 161.00 ck=1	719	1.103
1_d	NILAND 161.00-CVSUB161 161.00 ck=1	IID	PALOVRDE 500.00-MIDPOINX 500.00 ck=1	748	1.111
1_d	NILAND 161.00-BLYTHE 161.00 ck=1	IID	PALOVRDE 500.00-MIDPOINX 500.00 ck=1	748	1.114
1_d	RTAP2 92.00-RTP1 92.00 ck=1	IID	PALOVRDE 500.00-MIDPOINX 500.00 ck=1	748	1.064
1_d	AV58TP1 161.00-BANISTER 161.00 ck=1	IID	PALOVRDE 500.00-MIDPOINX 500.00 ck=1	748	1.072
1_d	HEBERSCE 92.00-HEBERSCE 13.80 ck=1	IID	PALOVRDE 500.00-MIDPOINX 500.00 ck=1	748	1.015
1_d	NILAND 161.00-CVSUB161 161.00 ck=1	IID	MIDPOINX 500.00-DEVERS 500.00 ck=1	749	1.113
1_d	NILAND 161.00-BLYTHE 161.00 ck=1	IID	MIDPOINX 500.00-DEVERS 500.00 ck=1	749	1.108
1_d	RTAP2 92.00-RTP1 92.00 ck=1	IID	MIDPOINX 500.00-DEVERS 500.00 ck=1	749	1.069
1_d	AV58TP1 161.00-BANISTER 161.00 ck=1	IID	MIDPOINX 500.00-DEVERS 500.00 ck=1	749	1.077

Table 4
Lines and Transformer Over Loads Report
w/o PVD2 "Case 1"

1_d	HEBERSCE 92.00-HEBERSCE 13.80 ck=1	IID	MIDPOINX 500.00-DEVERS 500.00 ck=1	749	1.038
1_d	DROP3 34.50-DROP3 6.90 ck=1	IID	DROP3 92.00-DROP3 6.90 ck=1	844	1.407
1_d	NILAND 161.00-BLYTHE 161.00 ck=1	IID	CEUNIT1 16.00-CESUB 161.00 ck=1	873	1.019
1_d	MIDWAY x 230.00-MIDWAY 92.00 ck=2	IID	MIDWAY x 230.00-MIDWAY 92.00 ck=1	876	1.32
1_d	MIDWAY x 230.00-MIDWAY 92.00 ck=1	IID	MIDWAY x 230.00-MIDWAY 92.00 ck=2	877	1.32
1_d	NILAND 161.00-BLYTHE 161.00 ck=1	IID	EAGLEMTN 230.00-EAGLEMTN 161.00 ck=1	1220	1.038
1_a	PALOVRDE 500.00-MIDPOINX 500.00 ck=1	ARIZONA	BEP2500 500.00-BLY500 500.00 ck=1	1	1.096
1_a	PALOVRDE 500.00-MIDPOINX 500.00 ck=1	ARIZONA	BLY500 500.00-DEVERS 500.00 ck=1	3	1.097
1_a	PERKINS 500.00-PERK PS1 500.00 ck=1	ARIZONA	H ALLEN 500.00-MEAD 500.00 ck=1	15	1.044
1_a	PERKINS 500.00-PERK PS2 500.00 ck=1	ARIZONA	H ALLEN 500.00-MEAD 500.00 ck=1	15	1.044
1_a	PERKINS 500.00-PERK PS1 500.00 ck=1	ARIZONA	DAVIS 230.00-MEAD N 230.00 ck=1	30	1.02
1_a	PERKINS 500.00-PERK PS2 500.00 ck=1	ARIZONA	DAVIS 230.00-MEAD N 230.00 ck=1	30	1.02
1_a	PERKINS 500.00-PERK PS1 500.00 ck=1	ARIZONA	HOVRA5A6 230.00-MEAD S 230.00 ck=1	33	1.019
1_a	PERKINS 500.00-PERK PS2 500.00 ck=1	ARIZONA	HOVRA5A6 230.00-MEAD S 230.00 ck=1	33	1.019
1_a	PERKINS 500.00-PERK PS1 500.00 ck=1	ARIZONA	HOVRA7-9 230.00-MEAD S 230.00 ck=1	34	1.019
1_a	PERKINS 500.00-PERK PS2 500.00 ck=1	ARIZONA	HOVRA7-9 230.00-MEAD S 230.00 ck=1	34	1.019
1_a	PALOVRDE 500.00-MIDPOINX 500.00 ck=1	ARIZONA	MEAD 500.00-MARKETPL 500.00 ck=1	35	1.084
1_a	PALOVRDE 500.00-MIDPOINX 500.00 ck=1	ARIZONA	PARKER 230.00-HAVASU 230.00 ck=1	38	1.043
1_a	PERKINS 500.00-PERK PS1 500.00 ck=1	ARIZONA	PARKER 230.00-HAVASU 230.00 ck=1	38	1.019
1_a	PERKINS 500.00-PERK PS2 500.00 ck=1	ARIZONA	PARKER 230.00-HAVASU 230.00 ck=1	38	1.019
1_a	PALOVRDE 500.00-MIDPOINX 500.00 ck=1	ARIZONA	LIBERTY 345.00-PEACOCK 345.00 ck=1	51	1.061
1_a	PERKINS 500.00-PERK PS1 500.00 ck=1	ARIZONA	LIBERTY 345.00-PEACOCK 345.00 ck=1	51	1.081
1_a	PERKINS 500.00-PERK PS2 500.00 ck=1	ARIZONA	LIBERTY 345.00-PEACOCK 345.00 ck=1	51	1.081
1_a	PERKINS 500.00-PERK PS1 500.00 ck=1	ARIZONA	HOVRN7N8 230.00-MEAD S 230.00 ck=1	59	1.02
1_a	PERKINS 500.00-PERK PS2 500.00 ck=1	ARIZONA	HOVRN7N8 230.00-MEAD S 230.00 ck=1	59	1.02
1_a	PERKINS 500.00-PERK PS1 500.00 ck=1	ARIZONA	HOVRN5N6 230.00-MEAD S 230.00 ck=1	60	1.02
1_a	PERKINS 500.00-PERK PS2 500.00 ck=1	ARIZONA	HOVRN5N6 230.00-MEAD S 230.00 ck=1	60	1.02
1_a	PERKINS 500.00-PERK PS1 500.00 ck=1	ARIZONA	HOVRN3N4 230.00-MEAD S 230.00 ck=1	61	1.02
1_a	PERKINS 500.00-PERK PS2 500.00 ck=1	ARIZONA	HOVRN3N4 230.00-MEAD S 230.00 ck=1	61	1.02
1_a	PERKINS 500.00-PERK PS1 500.00 ck=1	ARIZONA	HOVRN1N2 230.00-MEAD S 230.00 ck=1	62	1.019
1_a	PERKINS 500.00-PERK PS2 500.00 ck=1	ARIZONA	HOVRN1N2 230.00-MEAD S 230.00 ck=1	62	1.019
1_a	PERKINS 500.00-PERK PS1 500.00 ck=1	ARIZONA	HOVRA1A2 230.00-MEAD S 230.00 ck=1	63	1.019
1_a	PERKINS 500.00-PERK PS2 500.00 ck=1	ARIZONA	HOVRA1A2 230.00-MEAD S 230.00 ck=1	63	1.019
1_a	PALOVRDE 500.00-MIDPOINX 500.00 ck=1	ARIZONA	PEACOCK 345.00-MEAD 345.00 ck=1	73	1.049
1_a	PERKINS 500.00-PERK PS1 500.00 ck=1	ARIZONA	PEACOCK 345.00-MEAD 345.00 ck=1	73	1.074
1_a	PERKINS 500.00-PERK PS2 500.00 ck=1	ARIZONA	PEACOCK 345.00-MEAD 345.00 ck=1	73	1.074
1_a	PALOVRDE 500.00-MIDPOINX 500.00 ck=1	ARIZONA	BUCK230 230.00-BUCKPST2 230.00 ck=1	77	1.053

Table 4
Lines and Transformer Over Loads Report
w/o PVD2 "Case 1"

1_a	PERKINS 500.00-PERK PS1 500.00 ck=1	ARIZONA	SIGURDPS 230.00-GLENCANY 230.00 ck=1	79	1.018
1_a	PERKINS 500.00-PERK PS2 500.00 ck=1	ARIZONA	SIGURDPS 230.00-GLENCANY 230.00 ck=1	79	1.018
1_a	PALOVRDE 500.00-MIDPOINX 500.00 ck=1	ARIZONA	LEATHERS 92.00-MIDWAY 92.00 ck=1	231	1.038
1_a	PALOVRDE 500.00-MIDPOINX 500.00 ck=1	ARIZONA	MEAD 500.00-PERKINS 500.00 ck=1	272	1.166
1_a	LIBTYPHS 230.00-LIBERTY 230.00 ck=1	ARIZONA	MEAD 500.00-PERKINS 500.00 ck=1	272	1.079
1_a	PALOVRDE 500.00-MIDPOINX 500.00 ck=1	ARIZONA	ELDORDO 500.00-LUGO 500.00 ck=1	303	1.085
1_a	PALOVRDE 500.00-MIDPOINX 500.00 ck=1	ARIZONA	LUGO 500.00-MIRALOMA 500.00 ck=2	331	1.046
1_a	PALOVRDE 500.00-MIDPOINX 500.00 ck=1	ARIZONA	LUGO 500.00-MIRALOMA 500.00 ck=3	332	1.045
1_a	PALOVRDE 500.00-MIDPOINX 500.00 ck=1	ARIZONA	LUGO 500.00-MOHAVE 500.00 ck=1	333	1.086
1_a	PALOVRDE 500.00-MIDPOINX 500.00 ck=1	ARIZONA	LUGO 500.00-MIRALOMA 500.00 ck=1	334	1.044
1_a	PALOVRDE 500.00-MIDPOINX 500.00 ck=1	ARIZONA	MOHAVE 500.00-ELDORDO 500.00 ck=1	355	1.087
1_a	PERKINS 500.00-PERK PS1 500.00 ck=1	ARIZONA	SERRANO 500.00-VALLEYSC 500.00 ck=1	390	1.098
1_a	PERKINS 500.00-PERK PS2 500.00 ck=1	ARIZONA	SERRANO 500.00-VALLEYSC 500.00 ck=1	390	1.098
1_a	PERKINS 500.00-PERK PS1 500.00 ck=1	ARIZONA	DEVERS 500.00-VALLEYSC 500.00 ck=1	601	1.192
1_a	PERKINS 500.00-PERK PS2 500.00 ck=1	ARIZONA	DEVERS 500.00-VALLEYSC 500.00 ck=1	601	1.192
1_a	PERKINS 500.00-PERK PS1 500.00 ck=1	ARIZONA	DEVERS 230.00-OAK_VLLY 230.00 ck=1	603	1.018
1_a	PERKINS 500.00-PERK PS2 500.00 ck=1	ARIZONA	DEVERS 230.00-OAK_VLLY 230.00 ck=1	603	1.018
1_a	PERKINS 500.00-PERK PS1 500.00 ck=1	ARIZONA	DEVERS 230.00-VSTA 230.00 ck=2	605	1.019
1_a	PERKINS 500.00-PERK PS2 500.00 ck=1	ARIZONA	DEVERS 230.00-VSTA 230.00 ck=2	605	1.019
1_a	PALOVRDE 500.00-MIDPOINX 500.00 ck=1	ARIZONA	INDIGO 115.00-TAP817 115.00 ck=1	640	1.041
1_a	PERKINS 500.00-PERK PS1 500.00 ck=1	ARIZONA	VSTA 230.00-DEVERS 230.00 ck=1	643	1.018
1_a	PERKINS 500.00-PERK PS2 500.00 ck=1	ARIZONA	VSTA 230.00-DEVERS 230.00 ck=1	643	1.018
1_a	PALOVRDE 500.00-MIDPOINX 500.00 ck=1	ARIZONA	MOENKOPI 500.00-ELDORDO 500.00 ck=1	705	1.107
1_a	PERKINS 500.00-PERK PS1 500.00 ck=1	ARIZONA	MOENKOPI 500.00-ELDORDO 500.00 ck=1	705	1.184
1_a	PERKINS 500.00-PERK PS2 500.00 ck=1	ARIZONA	MOENKOPI 500.00-ELDORDO 500.00 ck=1	705	1.184
1_a	PALOVRDE 500.00-MIDPOINX 500.00 ck=1	ARIZONA	LUGO 500.00-VICTORVL 500.00 ck=1	723	1.103
1_a	PERKINS 500.00-PERK PS1 500.00 ck=1	ARIZONA	HOVRA3A4 230.00-MEAD N 230.00 ck=1	730	1.021
1_a	PERKINS 500.00-PERK PS2 500.00 ck=1	ARIZONA	HOVRA3A4 230.00-MEAD N 230.00 ck=1	730	1.021
1_a	PERKINS 500.00-PERK PS1 500.00 ck=1	ARIZONA	BUCK230 230.00-J.HINDS 230.00 ck=1	734	1.028
1_a	PERKINS 500.00-PERK PS2 500.00 ck=1	ARIZONA	BUCK230 230.00-J.HINDS 230.00 ck=1	734	1.028
1_a	PERKINPS 500.00-WESTWING 500.00 ck=1	ARIZONA	PALOVRDE 500.00-MIDPOINX 500.00 ck=1	748	1.021
1_a	PERKINS 500.00-PERK PS1 500.00 ck=1	ARIZONA	PALOVRDE 500.00-MIDPOINX 500.00 ck=1	748	1.421
1_a	PERKINS 500.00-PERK PS2 500.00 ck=1	ARIZONA	PALOVRDE 500.00-MIDPOINX 500.00 ck=1	748	1.421
1_a	LIBTYPHS 230.00-LIBERTY 230.00 ck=1	ARIZONA	PALOVRDE 500.00-MIDPOINX 500.00 ck=1	748	1.142
1_a	PERKINS 500.00-PERK PS1 500.00 ck=1	ARIZONA	MIDPOINX 500.00-DEVERS 500.00 ck=1	749	1.384
1_a	PERKINS 500.00-PERK PS2 500.00 ck=1	ARIZONA	MIDPOINX 500.00-DEVERS 500.00 ck=1	749	1.384
1_a	LIBTYPHS 230.00-LIBERTY 230.00 ck=1	ARIZONA	MIDPOINX 500.00-DEVERS 500.00 ck=1	749	1.11

Table 4
Lines and Transformer Over Loads Report
w/o PVD2 "Case 1"

1_a	PALOVRDE 500.00-MIDPOINX 500.00 ck=1	ARIZONA	MIDPOINX 500.00-MIDPXPST 230.00 ck=1	750	1.053
1_a	PERKINS 500.00-PERK PS1 500.00 ck=1	ARIZONA	HOVRA1A2 16.50-HOVRA1A2 230.00 ck=1	768	1.019
1_a	PERKINS 500.00-PERK PS2 500.00 ck=1	ARIZONA	HOVRA1A2 16.50-HOVRA1A2 230.00 ck=1	768	1.019
1_a	PERKINS 500.00-PERK PS1 500.00 ck=1	ARIZONA	HOVRN1N2 16.50-HOVRN1N2 230.00 ck=1	770	1.019
1_a	PERKINS 500.00-PERK PS2 500.00 ck=1	ARIZONA	HOVRN1N2 16.50-HOVRN1N2 230.00 ck=1	770	1.019
1_a	PERKINS 500.00-PERK PS1 500.00 ck=1	ARIZONA	HOVRN3N4 16.50-HOVRN3N4 230.00 ck=1	771	1.02
1_a	PERKINS 500.00-PERK PS2 500.00 ck=1	ARIZONA	HOVRN3N4 16.50-HOVRN3N4 230.00 ck=1	771	1.02
1_a	PERKINS 500.00-PERK PS1 500.00 ck=1	ARIZONA	HOVRN5N6 16.50-HOVRN5N6 230.00 ck=1	772	1.02
1_a	PERKINS 500.00-PERK PS2 500.00 ck=1	ARIZONA	HOVRN5N6 16.50-HOVRN5N6 230.00 ck=1	772	1.02
1_a	PERKINS 500.00-PERK PS1 500.00 ck=1	ARIZONA	HOVRN7N8 16.50-HOVRN7N8 230.00 ck=1	773	1.02
1_a	PERKINS 500.00-PERK PS2 500.00 ck=1	ARIZONA	HOVRN7N8 16.50-HOVRN7N8 230.00 ck=1	773	1.02
1_a	PALOVRDE 500.00-MIDPOINX 500.00 ck=1	ARIZONA	MEAD 345.00-MEAD N 230.00 ck=1	774	1.049
1_a	PERKINS 500.00-PERK PS1 500.00 ck=1	ARIZONA	MEAD 345.00-MEAD N 230.00 ck=1	774	1.074
1_a	PERKINS 500.00-PERK PS2 500.00 ck=1	ARIZONA	MEAD 345.00-MEAD N 230.00 ck=1	774	1.074
1_a	PALOVRDE 500.00-MIDPOINX 500.00 ck=1	ARIZONA	LIBERTY 345.00-LIBTYPHS 230.00 ck=1	780	1.061
1_a	PERKINS 500.00-PERK PS1 500.00 ck=1	ARIZONA	LIBERTY 345.00-LIBTYPHS 230.00 ck=1	780	1.082
1_a	PERKINS 500.00-PERK PS2 500.00 ck=1	ARIZONA	LIBERTY 345.00-LIBTYPHS 230.00 ck=1	780	1.082
1_a	PALOVRDE 500.00-MIDPOINX 500.00 ck=1	ARIZONA	LIBTYPHS 230.00-LIBERTY 230.00 ck=1	781	1.061
1_a	PERKINS 500.00-PERK PS1 500.00 ck=1	ARIZONA	LIBTYPHS 230.00-LIBERTY 230.00 ck=1	781	1.082
1_a	PERKINS 500.00-PERK PS2 500.00 ck=1	ARIZONA	LIBTYPHS 230.00-LIBERTY 230.00 ck=1	781	1.082
1_a	PALOVRDE 500.00-MIDPOINX 500.00 ck=1	ARIZONA	MIDPXPST 230.00-BUCKPST2 230.00 ck=1	782	1.053
1_a	PALOVRDE 500.00-MIDPOINX 500.00 ck=1	ARIZONA	BUCKBLVD 161.00-BUCKST1 16.00 ck=1	789	1.038
1_a	PERKINS 500.00-PERK PS1 500.00 ck=1	ARIZONA	DEVERS 500.00-DEVERS 230.00 ck=1	1189	1.018
1_a	PERKINS 500.00-PERK PS2 500.00 ck=1	ARIZONA	DEVERS 500.00-DEVERS 230.00 ck=1	1189	1.018
1_a	PALOVRDE 500.00-MIDPOINX 500.00 ck=1	ARIZONA	BUCKBLVD 161.00-BUCKPS1 161.00 ck=1	1278	1.048
1_a	PALOVRDE 500.00-MIDPOINX 500.00 ck=1	ARIZONA	BUCK230 230.00-BUCKCT1 16.00 ck=1	1279	1.055
1_a	PALOVRDE 500.00-MIDPOINX 500.00 ck=1	ARIZONA	BUCK230 230.00-BUCKCT2 16.00 ck=1	1280	1.055
1_a	PALOVRDE 500.00-MIDPOINX 500.00 ck=1	ARIZONA	BUCK230 230.00-BUCKPS1 161.00 ck=1	1281	1.048
1_a	PERKINS 500.00-PERK PS1 500.00 ck=1	ARIZONA	DEVERS 500.00-DEVERS 230.00 ck=2	1290	1.018
1_a	PERKINS 500.00-PERK PS2 500.00 ck=1	ARIZONA	DEVERS 500.00-DEVERS 230.00 ck=2	1290	1.018
1_a	PALOVRDE 500.00-MIDPOINX 500.00 ck=1	ARIZONA	BEP2500 500.00-BLY2CT1 16.00 ck=1	1293	1.05
1_a	PALOVRDE 500.00-MIDPOINX 500.00 ck=1	ARIZONA	BEP2500 500.00-BLY2CT2 16.00 ck=1	1294	1.05
1_a	PALOVRDE 500.00-MIDPOINX 500.00 ck=1	ARIZONA	BEP2500 500.00-BLY2ST1 16.00 ck=1	1295	1.049
1_b	PALOVRDE 500.00-MIDPOINX 500.00 ck=1	ARIZONA	BEP2500 500.00-BLY500 500.00 ck=1	1	1.04
1_b	PALOVRDE 500.00-MIDPOINX 500.00 ck=1	ARIZONA	BLY500 500.00-DEVERS 500.00 ck=1	3	1.043
1_b	PERKINS 500.00-PERK PS1 500.00 ck=1	ARIZONA	H ALLEN 500.00-MEAD 500.00 ck=1	15	1.045
1_b	PERKINS 500.00-PERK PS2 500.00 ck=1	ARIZONA	H ALLEN 500.00-MEAD 500.00 ck=1	15	1.045

Table 4
Lines and Transformer Over Loads Report
w/o PVD2 "Case 1"

1_b	PERKINS 500.00-PERK PS1 500.00 ck=1	ARIZONA	DAVIS 230.00-MEAD N 230.00 ck=1	30	1.021
1_b	PERKINS 500.00-PERK PS2 500.00 ck=1	ARIZONA	DAVIS 230.00-MEAD N 230.00 ck=1	30	1.021
1_b	PERKINS 500.00-PERK PS1 500.00 ck=1	ARIZONA	HOVRA5A6 230.00-MEAD S 230.00 ck=1	33	1.02
1_b	PERKINS 500.00-PERK PS2 500.00 ck=1	ARIZONA	HOVRA5A6 230.00-MEAD S 230.00 ck=1	33	1.02
1_b	PERKINS 500.00-PERK PS1 500.00 ck=1	ARIZONA	HOVRA7-9 230.00-MEAD S 230.00 ck=1	34	1.02
1_b	PERKINS 500.00-PERK PS2 500.00 ck=1	ARIZONA	HOVRA7-9 230.00-MEAD S 230.00 ck=1	34	1.02
1_b	PALOVRDE 500.00-MIDPOINX 500.00 ck=1	ARIZONA	MEAD 500.00-MARKETPL 500.00 ck=1	35	1.027
1_b	PERKINS 500.00-PERK PS1 500.00 ck=1	ARIZONA	PARKER 230.00-HAVASU 230.00 ck=1	38	1.02
1_b	PERKINS 500.00-PERK PS2 500.00 ck=1	ARIZONA	PARKER 230.00-HAVASU 230.00 ck=1	38	1.02
1_b	PALOVRDE 500.00-MIDPOINX 500.00 ck=1	ARIZONA	LIBERTY 345.00-PEACOCK 345.00 ck=1	51	1.005
1_b	PERKINS 500.00-PERK PS1 500.00 ck=1	ARIZONA	LIBERTY 345.00-PEACOCK 345.00 ck=1	51	1.083
1_b	PERKINS 500.00-PERK PS2 500.00 ck=1	ARIZONA	LIBERTY 345.00-PEACOCK 345.00 ck=1	51	1.083
1_b	PERKINS 500.00-PERK PS1 500.00 ck=1	ARIZONA	HOVRN7N8 230.00-MEAD S 230.00 ck=1	59	1.021
1_b	PERKINS 500.00-PERK PS2 500.00 ck=1	ARIZONA	HOVRN7N8 230.00-MEAD S 230.00 ck=1	59	1.021
1_b	PERKINS 500.00-PERK PS1 500.00 ck=1	ARIZONA	HOVRN5N6 230.00-MEAD S 230.00 ck=1	60	1.021
1_b	PERKINS 500.00-PERK PS2 500.00 ck=1	ARIZONA	HOVRN5N6 230.00-MEAD S 230.00 ck=1	60	1.021
1_b	PERKINS 500.00-PERK PS1 500.00 ck=1	ARIZONA	HOVRN3N4 230.00-MEAD S 230.00 ck=1	61	1.021
1_b	PERKINS 500.00-PERK PS2 500.00 ck=1	ARIZONA	HOVRN3N4 230.00-MEAD S 230.00 ck=1	61	1.021
1_b	PERKINS 500.00-PERK PS1 500.00 ck=1	ARIZONA	HOVRN1N2 230.00-MEAD S 230.00 ck=1	62	1.02
1_b	PERKINS 500.00-PERK PS2 500.00 ck=1	ARIZONA	HOVRN1N2 230.00-MEAD S 230.00 ck=1	62	1.02
1_b	PERKINS 500.00-PERK PS1 500.00 ck=1	ARIZONA	HOVRA1A2 230.00-MEAD S 230.00 ck=1	63	1.02
1_b	PERKINS 500.00-PERK PS2 500.00 ck=1	ARIZONA	HOVRA1A2 230.00-MEAD S 230.00 ck=1	63	1.02
1_b	PERKINS 500.00-PERK PS1 500.00 ck=1	ARIZONA	PEACOCK 345.00-MEAD 345.00 ck=1	73	1.075
1_b	PERKINS 500.00-PERK PS2 500.00 ck=1	ARIZONA	PEACOCK 345.00-MEAD 345.00 ck=1	73	1.075
1_b	PERKINS 500.00-PERK PS1 500.00 ck=1	ARIZONA	SIGURDPS 230.00-GLENCANY 230.00 ck=1	79	1.019
1_b	PERKINS 500.00-PERK PS2 500.00 ck=1	ARIZONA	SIGURDPS 230.00-GLENCANY 230.00 ck=1	79	1.019
1_b	PALOVRDE 500.00-MIDPOINX 500.00 ck=1	ARIZONA	MEAD 500.00-PERKINS 500.00 ck=1	272	1.107
1_b	LIBTYPHS 230.00-LIBERTY 230.00 ck=1	ARIZONA	MEAD 500.00-PERKINS 500.00 ck=1	272	1.081
1_b	PALOVRDE 500.00-MIDPOINX 500.00 ck=1	ARIZONA	ELDORDO 500.00-LUGO 500.00 ck=1	303	1.03
1_b	PALOVRDE 500.00-MIDPOINX 500.00 ck=1	ARIZONA	LUGO 500.00-MOHAVE 500.00 ck=1	333	1.031
1_b	PALOVRDE 500.00-MIDPOINX 500.00 ck=1	ARIZONA	MOHAVE 500.00-ELDORDO 500.00 ck=1	355	1.032
1_b	PERKINS 500.00-PERK PS1 500.00 ck=1	ARIZONA	SERRANO 500.00-VALLEYSC 500.00 ck=1	390	1.103
1_b	PERKINS 500.00-PERK PS2 500.00 ck=1	ARIZONA	SERRANO 500.00-VALLEYSC 500.00 ck=1	390	1.103
1_b	PERKINS 500.00-PERK PS1 500.00 ck=1	ARIZONA	DEVERS 500.00-VALLEYSC 500.00 ck=1	601	1.198
1_b	PERKINS 500.00-PERK PS2 500.00 ck=1	ARIZONA	DEVERS 500.00-VALLEYSC 500.00 ck=1	601	1.198
1_b	PERKINS 500.00-PERK PS1 500.00 ck=1	ARIZONA	DEVERS 230.00-OAK_VLLY 230.00 ck=1	603	1.018
1_b	PERKINS 500.00-PERK PS2 500.00 ck=1	ARIZONA	DEVERS 230.00-OAK_VLLY 230.00 ck=1	603	1.018

Table 4
Lines and Transformer Over Loads Report
w/o PVD2 "Case 1"

1_b	PERKINS 500.00-PERK PS1 500.00 ck=1	ARIZONA	DEVERS 230.00-VSTA 230.00 ck=2	605	1.019
1_b	PERKINS 500.00-PERK PS2 500.00 ck=1	ARIZONA	DEVERS 230.00-VSTA 230.00 ck=2	605	1.019
1_b	PERKINS 500.00-PERK PS1 500.00 ck=1	ARIZONA	VSTA 230.00-DEVERS 230.00 ck=1	643	1.019
1_b	PERKINS 500.00-PERK PS2 500.00 ck=1	ARIZONA	VSTA 230.00-DEVERS 230.00 ck=1	643	1.019
1_b	PALOVRDE 500.00-MIDPOINX 500.00 ck=1	ARIZONA	MOENKOPI 500.00-ELDORDO 500.00 ck=1	705	1.052
1_b	PERKINS 500.00-PERK PS1 500.00 ck=1	ARIZONA	MOENKOPI 500.00-ELDORDO 500.00 ck=1	705	1.191
1_b	PERKINS 500.00-PERK PS2 500.00 ck=1	ARIZONA	MOENKOPI 500.00-ELDORDO 500.00 ck=1	705	1.191
1_b	PALOVRDE 500.00-MIDPOINX 500.00 ck=1	ARIZONA	LUGO 500.00-VICTORVL 500.00 ck=1	723	1.047
1_b	PERKINS 500.00-PERK PS1 500.00 ck=1	ARIZONA	HOVRA3A4 230.00-MEAD N 230.00 ck=1	730	1.021
1_b	PERKINS 500.00-PERK PS2 500.00 ck=1	ARIZONA	HOVRA3A4 230.00-MEAD N 230.00 ck=1	730	1.021
1_b	PERKINPS 500.00-WESTWING 500.00 ck=1	ARIZONA	PALOVRDE 500.00-MIDPOINX 500.00 ck=1	748	1.005
1_b	PERKINS 500.00-PERK PS1 500.00 ck=1	ARIZONA	PALOVRDE 500.00-MIDPOINX 500.00 ck=1	748	1.4
1_b	PERKINS 500.00-PERK PS2 500.00 ck=1	ARIZONA	PALOVRDE 500.00-MIDPOINX 500.00 ck=1	748	1.4
1_b	LIBTYPHS 230.00-LIBERTY 230.00 ck=1	ARIZONA	PALOVRDE 500.00-MIDPOINX 500.00 ck=1	748	1.128
1_b	PERKINPS 500.00-WESTWING 500.00 ck=1	ARIZONA	MIDPOINX 500.00-DEVERS 500.00 ck=1	749	1.052
1_b	MOENKOPI 500.00-ELDORDO 500.00 ck=1	ARIZONA	MIDPOINX 500.00-DEVERS 500.00 ck=1	749	1.015
1_b	PERKINS 500.00-PERK PS1 500.00 ck=1	ARIZONA	MIDPOINX 500.00-DEVERS 500.00 ck=1	749	1.456
1_b	PERKINS 500.00-PERK PS2 500.00 ck=1	ARIZONA	MIDPOINX 500.00-DEVERS 500.00 ck=1	749	1.456
1_b	LIBTYPHS 230.00-LIBERTY 230.00 ck=1	ARIZONA	MIDPOINX 500.00-DEVERS 500.00 ck=1	749	1.153
1_b	PERKINS 500.00-PERK PS1 500.00 ck=1	ARIZONA	HOVRA1A2 16.50-HOVRA1A2 230.00 ck=1	768	1.021
1_b	PERKINS 500.00-PERK PS2 500.00 ck=1	ARIZONA	HOVRA1A2 16.50-HOVRA1A2 230.00 ck=1	768	1.021
1_b	PERKINS 500.00-PERK PS1 500.00 ck=1	ARIZONA	HOVRN1N2 16.50-HOVRN1N2 230.00 ck=1	770	1.02
1_b	PERKINS 500.00-PERK PS2 500.00 ck=1	ARIZONA	HOVRN1N2 16.50-HOVRN1N2 230.00 ck=1	770	1.02
1_b	PERKINS 500.00-PERK PS1 500.00 ck=1	ARIZONA	HOVRN3N4 16.50-HOVRN3N4 230.00 ck=1	771	1.021
1_b	PERKINS 500.00-PERK PS2 500.00 ck=1	ARIZONA	HOVRN3N4 16.50-HOVRN3N4 230.00 ck=1	771	1.021
1_b	PERKINS 500.00-PERK PS1 500.00 ck=1	ARIZONA	HOVRN5N6 16.50-HOVRN5N6 230.00 ck=1	772	1.021
1_b	PERKINS 500.00-PERK PS2 500.00 ck=1	ARIZONA	HOVRN5N6 16.50-HOVRN5N6 230.00 ck=1	772	1.021
1_b	PERKINS 500.00-PERK PS1 500.00 ck=1	ARIZONA	HOVRN7N8 16.50-HOVRN7N8 230.00 ck=1	773	1.021
1_b	PERKINS 500.00-PERK PS2 500.00 ck=1	ARIZONA	HOVRN7N8 16.50-HOVRN7N8 230.00 ck=1	773	1.021
1_b	PERKINS 500.00-PERK PS1 500.00 ck=1	ARIZONA	MEAD 345.00-MEAD N 230.00 ck=1	774	1.076
1_b	PERKINS 500.00-PERK PS2 500.00 ck=1	ARIZONA	MEAD 345.00-MEAD N 230.00 ck=1	774	1.076
1_b	PALOVRDE 500.00-MIDPOINX 500.00 ck=1	ARIZONA	LIBERTY 345.00-LIBTYPHS 230.00 ck=1	780	1.004
1_b	PERKINS 500.00-PERK PS1 500.00 ck=1	ARIZONA	LIBERTY 345.00-LIBTYPHS 230.00 ck=1	780	1.084
1_b	PERKINS 500.00-PERK PS2 500.00 ck=1	ARIZONA	LIBERTY 345.00-LIBTYPHS 230.00 ck=1	780	1.084
1_b	PALOVRDE 500.00-MIDPOINX 500.00 ck=1	ARIZONA	LIBTYPHS 230.00-LIBERTY 230.00 ck=1	781	1.004
1_b	PERKINS 500.00-PERK PS1 500.00 ck=1	ARIZONA	LIBTYPHS 230.00-LIBERTY 230.00 ck=1	781	1.084
1_b	PERKINS 500.00-PERK PS2 500.00 ck=1	ARIZONA	LIBTYPHS 230.00-LIBERTY 230.00 ck=1	781	1.084

Table 4
Lines and Transformer Over Loads Report
w/o PVD2 "Case 1"

1_b	PERKINS 500.00-PERK PS1 500.00 ck=1	ARIZONA	DEVERS 500.00-DEVERS 230.00 ck=1	1189	1.022
1_b	PERKINS 500.00-PERK PS2 500.00 ck=1	ARIZONA	DEVERS 500.00-DEVERS 230.00 ck=1	1189	1.022
1_b	PALOVRDE 500.00-MIDPOINX 500.00 ck=1	ARIZONA	BUCK230 230.00-BUCKCT1 16.00 ck=1	1279	1.004
1_b	PALOVRDE 500.00-MIDPOINX 500.00 ck=1	ARIZONA	BUCK230 230.00-BUCKCT2 16.00 ck=1	1280	1.004
1_b	PERKINS 500.00-PERK PS1 500.00 ck=1	ARIZONA	DEVERS 500.00-DEVERS 230.00 ck=2	1290	1.022
1_b	PERKINS 500.00-PERK PS2 500.00 ck=1	ARIZONA	DEVERS 500.00-DEVERS 230.00 ck=2	1290	1.022
1_c	PALOVRDE 500.00-MIDPOINX 500.00 ck=1	ARIZONA	BEP2500 500.00-BLY500 500.00 ck=1	1	1.124
1_c	PERKINS 500.00-PERK PS1 500.00 ck=1	ARIZONA	H ALLEN 500.00-MEAD 500.00 ck=1	15	1.046
1_c	PERKINS 500.00-PERK PS2 500.00 ck=1	ARIZONA	H ALLEN 500.00-MEAD 500.00 ck=1	15	1.046
1_c	PERKINS 500.00-PERK PS1 500.00 ck=1	ARIZONA	DAVIS 230.00-MEAD N 230.00 ck=1	30	1.022
1_c	PERKINS 500.00-PERK PS2 500.00 ck=1	ARIZONA	DAVIS 230.00-MEAD N 230.00 ck=1	30	1.022
1_c	PERKINS 500.00-PERK PS1 500.00 ck=1	ARIZONA	HOVRA5A6 230.00-MEAD S 230.00 ck=1	33	1.02
1_c	PERKINS 500.00-PERK PS2 500.00 ck=1	ARIZONA	HOVRA5A6 230.00-MEAD S 230.00 ck=1	33	1.02
1_c	PERKINS 500.00-PERK PS1 500.00 ck=1	ARIZONA	HOVRA7-9 230.00-MEAD S 230.00 ck=1	34	1.021
1_c	PERKINS 500.00-PERK PS2 500.00 ck=1	ARIZONA	HOVRA7-9 230.00-MEAD S 230.00 ck=1	34	1.021
1_c	PALOVRDE 500.00-MIDPOINX 500.00 ck=1	ARIZONA	MEAD 500.00-MARKETPL 500.00 ck=1	35	1.114
1_c	PALOVRDE 500.00-MIDPOINX 500.00 ck=1	ARIZONA	PARKER 230.00-HAVASU 230.00 ck=1	38	1.075
1_c	PERKINS 500.00-PERK PS1 500.00 ck=1	ARIZONA	PARKER 230.00-HAVASU 230.00 ck=1	38	1.02
1_c	PERKINS 500.00-PERK PS2 500.00 ck=1	ARIZONA	PARKER 230.00-HAVASU 230.00 ck=1	38	1.02
1_c	PALOVRDE 500.00-MIDPOINX 500.00 ck=1	ARIZONA	LIBERTY 345.00-PEACOCK 345.00 ck=1	51	1.089
1_c	PERKINS 500.00-PERK PS1 500.00 ck=1	ARIZONA	LIBERTY 345.00-PEACOCK 345.00 ck=1	51	1.083
1_c	PERKINS 500.00-PERK PS2 500.00 ck=1	ARIZONA	LIBERTY 345.00-PEACOCK 345.00 ck=1	51	1.083
1_c	PERKINS 500.00-PERK PS1 500.00 ck=1	ARIZONA	HOVRN7N8 230.00-MEAD S 230.00 ck=1	59	1.022
1_c	PERKINS 500.00-PERK PS2 500.00 ck=1	ARIZONA	HOVRN7N8 230.00-MEAD S 230.00 ck=1	59	1.022
1_c	PERKINS 500.00-PERK PS1 500.00 ck=1	ARIZONA	HOVRN5N6 230.00-MEAD S 230.00 ck=1	60	1.022
1_c	PERKINS 500.00-PERK PS2 500.00 ck=1	ARIZONA	HOVRN5N6 230.00-MEAD S 230.00 ck=1	60	1.022
1_c	PERKINS 500.00-PERK PS1 500.00 ck=1	ARIZONA	HOVRN3N4 230.00-MEAD S 230.00 ck=1	61	1.022
1_c	PERKINS 500.00-PERK PS2 500.00 ck=1	ARIZONA	HOVRN3N4 230.00-MEAD S 230.00 ck=1	61	1.022
1_c	PERKINS 500.00-PERK PS1 500.00 ck=1	ARIZONA	HOVRN1N2 230.00-MEAD S 230.00 ck=1	62	1.02
1_c	PERKINS 500.00-PERK PS2 500.00 ck=1	ARIZONA	HOVRN1N2 230.00-MEAD S 230.00 ck=1	62	1.02
1_c	PERKINS 500.00-PERK PS1 500.00 ck=1	ARIZONA	HOVRA1A2 230.00-MEAD S 230.00 ck=1	63	1.021
1_c	PERKINS 500.00-PERK PS2 500.00 ck=1	ARIZONA	HOVRA1A2 230.00-MEAD S 230.00 ck=1	63	1.021
1_c	PALOVRDE 500.00-MIDPOINX 500.00 ck=1	ARIZONA	PEACOCK 345.00-MEAD 345.00 ck=1	73	1.079
1_c	PERKINS 500.00-PERK PS1 500.00 ck=1	ARIZONA	PEACOCK 345.00-MEAD 345.00 ck=1	73	1.076
1_c	PERKINS 500.00-PERK PS2 500.00 ck=1	ARIZONA	PEACOCK 345.00-MEAD 345.00 ck=1	73	1.076
1_c	PERKINS 500.00-PERK PS1 500.00 ck=1	ARIZONA	SIGURDPS 230.00-GLENCANY 230.00 ck=1	79	1.019
1_c	PERKINS 500.00-PERK PS2 500.00 ck=1	ARIZONA	SIGURDPS 230.00-GLENCANY 230.00 ck=1	79	1.019

Table 4
Lines and Transformer Over Loads Report
w/o PVD2 "Case 1"

1_c	PALOVRDE 500.00-MIDPOINX 500.00 ck=1	ARIZONA	LEATHERS 92.00-MIDWAY 92.00 ck=1	231	1.067
1_c	PALOVRDE 500.00-MIDPOINX 500.00 ck=1	ARIZONA	MEAD 500.00-PERKINS 500.00 ck=1	272	1.191
1_c	LIBTYPHS 230.00-LIBERTY 230.00 ck=1	ARIZONA	MEAD 500.00-PERKINS 500.00 ck=1	272	1.081
1_c	PALOVRDE 500.00-MIDPOINX 500.00 ck=1	ARIZONA	ELDORDO 500.00-LUGO 500.00 ck=1	303	1.116
1_c	PALOVRDE 500.00-MIDPOINX 500.00 ck=1	ARIZONA	LUGO 500.00-MIRALOMA 500.00 ck=2	331	1.076
1_c	PALOVRDE 500.00-MIDPOINX 500.00 ck=1	ARIZONA	LUGO 500.00-MIRALOMA 500.00 ck=3	332	1.075
1_c	PALOVRDE 500.00-MIDPOINX 500.00 ck=1	ARIZONA	LUGO 500.00-MOHAVE 500.00 ck=1	333	1.117
1_c	PALOVRDE 500.00-MIDPOINX 500.00 ck=1	ARIZONA	LUGO 500.00-MIRALOMA 500.00 ck=1	334	1.074
1_c	PALOVRDE 500.00-MIDPOINX 500.00 ck=1	ARIZONA	MOHAVE 500.00-ELDORDO 500.00 ck=1	355	1.118
1_c	PERKINS 500.00-PERK PS1 500.00 ck=1	ARIZONA	SERRANO 500.00-VALLEYSC 500.00 ck=1	390	1.1
1_c	PERKINS 500.00-PERK PS2 500.00 ck=1	ARIZONA	SERRANO 500.00-VALLEYSC 500.00 ck=1	390	1.1
1_c	PERKINS 500.00-PERK PS1 500.00 ck=1	ARIZONA	DEVERS 500.00-VALLEYSC 500.00 ck=1	601	1.195
1_c	PERKINS 500.00-PERK PS2 500.00 ck=1	ARIZONA	DEVERS 500.00-VALLEYSC 500.00 ck=1	601	1.195
1_c	PERKINS 500.00-PERK PS1 500.00 ck=1	ARIZONA	DEVERS 230.00-OAK_VLLY 230.00 ck=1	603	1.019
1_c	PERKINS 500.00-PERK PS2 500.00 ck=1	ARIZONA	DEVERS 230.00-OAK_VLLY 230.00 ck=1	603	1.019
1_c	PERKINS 500.00-PERK PS1 500.00 ck=1	ARIZONA	DEVERS 230.00-VSTA 230.00 ck=2	605	1.02
1_c	PERKINS 500.00-PERK PS2 500.00 ck=1	ARIZONA	DEVERS 230.00-VSTA 230.00 ck=2	605	1.02
1_c	PALOVRDE 500.00-MIDPOINX 500.00 ck=1	ARIZONA	INDIGO 115.00-TAP817 115.00 ck=1	640	1.071
1_c	PERKINS 500.00-PERK PS1 500.00 ck=1	ARIZONA	VSTA 230.00-DEVERS 230.00 ck=1	643	1.02
1_c	PERKINS 500.00-PERK PS2 500.00 ck=1	ARIZONA	VSTA 230.00-DEVERS 230.00 ck=1	643	1.02
1_c	PALOVRDE 500.00-MIDPOINX 500.00 ck=1	ARIZONA	EAGLEMTN 230.00-IRON MTN 230.00 ck=1	663	1.068
1_c	PALOVRDE 500.00-MIDPOINX 500.00 ck=1	ARIZONA	IRON MTN 230.00-CAMINO 230.00 ck=1	664	1.068
1_c	PALOVRDE 500.00-MIDPOINX 500.00 ck=1	ARIZONA	J.HINDS 230.00-MIRAGE 230.00 ck=1	665	1.076
1_c	PALOVRDE 500.00-MIDPOINX 500.00 ck=1	ARIZONA	J.HINDS 230.00-EAGLEMTN 230.00 ck=1	666	1.076
1_c	PALOVRDE 500.00-MIDPOINX 500.00 ck=1	ARIZONA	MOENKOPI 500.00-ELDORDO 500.00 ck=1	705	1.135
1_c	PERKINS 500.00-PERK PS1 500.00 ck=1	ARIZONA	MOENKOPI 500.00-ELDORDO 500.00 ck=1	705	1.187
1_c	PERKINS 500.00-PERK PS2 500.00 ck=1	ARIZONA	MOENKOPI 500.00-ELDORDO 500.00 ck=1	705	1.187
1_c	PERKINS 500.00-PERK PS1 500.00 ck=1	ARIZONA	PARKER 230.00-GENE 230.00 ck=1	718	1.02
1_c	PERKINS 500.00-PERK PS2 500.00 ck=1	ARIZONA	PARKER 230.00-GENE 230.00 ck=1	718	1.02
1_c	PALOVRDE 500.00-MIDPOINX 500.00 ck=1	ARIZONA	LUGO 500.00-VICTORVL 500.00 ck=1	723	1.133
1_c	PERKINS 500.00-PERK PS1 500.00 ck=1	ARIZONA	HOVRA3A4 230.00-MEAD N 230.00 ck=1	730	1.022
1_c	PERKINS 500.00-PERK PS2 500.00 ck=1	ARIZONA	HOVRA3A4 230.00-MEAD N 230.00 ck=1	730	1.022
1_c	PERKINPS 500.00-WESTWING 500.00 ck=1	ARIZONA	PALOVRDE 500.00-MIDPOINX 500.00 ck=1	748	1.035
1_c	PERKINS 500.00-PERK PS1 500.00 ck=1	ARIZONA	PALOVRDE 500.00-MIDPOINX 500.00 ck=1	748	1.438
1_c	PERKINS 500.00-PERK PS2 500.00 ck=1	ARIZONA	PALOVRDE 500.00-MIDPOINX 500.00 ck=1	748	1.438
1_c	LIBTYPHS 230.00-LIBERTY 230.00 ck=1	ARIZONA	PALOVRDE 500.00-MIDPOINX 500.00 ck=1	748	1.146
1_c	PERKINS 500.00-PERK PS1 500.00 ck=1	ARIZONA	HOVRA1A2 16.50-HOVRA1A2 230.00 ck=1	768	1.021

Table 4
Lines and Transformer Over Loads Report
w/o PVD2 "Case 1"

1_c	PERKINS 500.00-PERK PS2 500.00 ck=1	ARIZONA	HOVRA1A2 16.50-HOVRA1A2 230.00 ck=1	768	1.021
1_c	PERKINS 500.00-PERK PS1 500.00 ck=1	ARIZONA	HOVRN1N2 16.50-HOVRN1N2 230.00 ck=1	770	1.02
1_c	PERKINS 500.00-PERK PS2 500.00 ck=1	ARIZONA	HOVRN1N2 16.50-HOVRN1N2 230.00 ck=1	770	1.02
1_c	PERKINS 500.00-PERK PS1 500.00 ck=1	ARIZONA	HOVRN3N4 16.50-HOVRN3N4 230.00 ck=1	771	1.022
1_c	PERKINS 500.00-PERK PS2 500.00 ck=1	ARIZONA	HOVRN3N4 16.50-HOVRN3N4 230.00 ck=1	771	1.022
1_c	PERKINS 500.00-PERK PS1 500.00 ck=1	ARIZONA	HOVRN5N6 16.50-HOVRN5N6 230.00 ck=1	772	1.022
1_c	PERKINS 500.00-PERK PS2 500.00 ck=1	ARIZONA	HOVRN5N6 16.50-HOVRN5N6 230.00 ck=1	772	1.022
1_c	PERKINS 500.00-PERK PS1 500.00 ck=1	ARIZONA	HOVRN7N8 16.50-HOVRN7N8 230.00 ck=1	773	1.022
1_c	PERKINS 500.00-PERK PS2 500.00 ck=1	ARIZONA	HOVRN7N8 16.50-HOVRN7N8 230.00 ck=1	773	1.022
1_c	PALOVRDE 500.00-MIDPOINX 500.00 ck=1	ARIZONA	MEAD 345.00-MEAD N 230.00 ck=1	774	1.079
1_c	PERKINS 500.00-PERK PS1 500.00 ck=1	ARIZONA	MEAD 345.00-MEAD N 230.00 ck=1	774	1.077
1_c	PERKINS 500.00-PERK PS2 500.00 ck=1	ARIZONA	MEAD 345.00-MEAD N 230.00 ck=1	774	1.077
1_c	PALOVRDE 500.00-MIDPOINX 500.00 ck=1	ARIZONA	LIBERTY 345.00-LIBTYPHS 230.00 ck=1	780	1.089
1_c	PERKINS 500.00-PERK PS1 500.00 ck=1	ARIZONA	LIBERTY 345.00-LIBTYPHS 230.00 ck=1	780	1.084
1_c	PERKINS 500.00-PERK PS2 500.00 ck=1	ARIZONA	LIBERTY 345.00-LIBTYPHS 230.00 ck=1	780	1.084
1_c	PALOVRDE 500.00-MIDPOINX 500.00 ck=1	ARIZONA	LIBTYPHS 230.00-LIBERTY 230.00 ck=1	781	1.089
1_c	PERKINS 500.00-PERK PS1 500.00 ck=1	ARIZONA	LIBTYPHS 230.00-LIBERTY 230.00 ck=1	781	1.084
1_c	PERKINS 500.00-PERK PS2 500.00 ck=1	ARIZONA	LIBTYPHS 230.00-LIBERTY 230.00 ck=1	781	1.084
1_c	PERKINS 500.00-PERK PS1 500.00 ck=1	ARIZONA	DEVERS 500.00-DEVERS 230.00 ck=1	1189	1.022
1_c	PERKINS 500.00-PERK PS2 500.00 ck=1	ARIZONA	DEVERS 500.00-DEVERS 230.00 ck=1	1189	1.022
1_c	PALOVRDE 500.00-MIDPOINX 500.00 ck=1	ARIZONA	BUCKBLVD 161.00-BUCKPS1 161.00 ck=1	1278	1.069
1_c	PALOVRDE 500.00-MIDPOINX 500.00 ck=1	ARIZONA	BUCK230 230.00-BUCKPS1 161.00 ck=1	1281	1.069
1_c	PERKINS 500.00-PERK PS1 500.00 ck=1	ARIZONA	DEVERS 500.00-DEVERS 230.00 ck=2	1290	1.022
1_c	PERKINS 500.00-PERK PS2 500.00 ck=1	ARIZONA	DEVERS 500.00-DEVERS 230.00 ck=2	1290	1.022
1_c	PALOVRDE 500.00-MIDPOINX 500.00 ck=1	ARIZONA	BEP2500 500.00-BLY2CT1 16.00 ck=1	1293	1.079
1_c	PALOVRDE 500.00-MIDPOINX 500.00 ck=1	ARIZONA	BEP2500 500.00-BLY2CT2 16.00 ck=1	1294	1.079
1_c	PALOVRDE 500.00-MIDPOINX 500.00 ck=1	ARIZONA	BEP2500 500.00-BLY2ST1 16.00 ck=1	1295	1.079
1_c	PALOVRDE 500.00-MIDPOINX 500.00 ck=1	ARIZONA	BLY500 500.00-BUCKBLVD 161.00 ck=1	1297	1.096
1_d	PERKINS 500.00-PERK PS1 500.00 ck=1	ARIZONA	H ALLEN 500.00-MEAD 500.00 ck=1	15	1.043
1_d	PERKINS 500.00-PERK PS2 500.00 ck=1	ARIZONA	H ALLEN 500.00-MEAD 500.00 ck=1	15	1.043
1_d	PERKINS 500.00-PERK PS1 500.00 ck=1	ARIZONA	DAVIS 230.00-MEAD N 230.00 ck=1	30	1.02
1_d	PERKINS 500.00-PERK PS2 500.00 ck=1	ARIZONA	DAVIS 230.00-MEAD N 230.00 ck=1	30	1.02
1_d	PERKINS 500.00-PERK PS1 500.00 ck=1	ARIZONA	HOVRA5A6 230.00-MEAD S 230.00 ck=1	33	1.018
1_d	PERKINS 500.00-PERK PS2 500.00 ck=1	ARIZONA	HOVRA5A6 230.00-MEAD S 230.00 ck=1	33	1.018
1_d	PERKINS 500.00-PERK PS1 500.00 ck=1	ARIZONA	HOVRA7-9 230.00-MEAD S 230.00 ck=1	34	1.018
1_d	PERKINS 500.00-PERK PS2 500.00 ck=1	ARIZONA	HOVRA7-9 230.00-MEAD S 230.00 ck=1	34	1.018
1_d	PALOVRDE 500.00-MIDPOINX 500.00 ck=1	ARIZONA	MEAD 500.00-MARKETPL 500.00 ck=1	35	1.218

Table 4
Lines and Transformer Over Loads Report
w/o PVD2 "Case 1"

1_d	PALOVRDE 500.00-MIDPOINX 500.00 ck=1	ARIZONA	PARKER 230.00-HAVASU 230.00 ck=1	38	1.182
1_d	PERKINS 500.00-PERK PS1 500.00 ck=1	ARIZONA	PARKER 230.00-HAVASU 230.00 ck=1	38	1.017
1_d	PERKINS 500.00-PERK PS2 500.00 ck=1	ARIZONA	PARKER 230.00-HAVASU 230.00 ck=1	38	1.017
1_d	PALOVRDE 500.00-MIDPOINX 500.00 ck=1	ARIZONA	LIBERTY 345.00-PEACOCK 345.00 ck=1	51	1.19
1_d	PERKINS 500.00-PERK PS1 500.00 ck=1	ARIZONA	LIBERTY 345.00-PEACOCK 345.00 ck=1	51	1.082
1_d	PERKINS 500.00-PERK PS2 500.00 ck=1	ARIZONA	LIBERTY 345.00-PEACOCK 345.00 ck=1	51	1.082
1_d	PERKINS 500.00-PERK PS1 500.00 ck=1	ARIZONA	HOVRN7N8 230.00-MEAD S 230.00 ck=1	59	1.019
1_d	PERKINS 500.00-PERK PS2 500.00 ck=1	ARIZONA	HOVRN7N8 230.00-MEAD S 230.00 ck=1	59	1.019
1_d	PERKINS 500.00-PERK PS1 500.00 ck=1	ARIZONA	HOVRN5N6 230.00-MEAD S 230.00 ck=1	60	1.019
1_d	PERKINS 500.00-PERK PS2 500.00 ck=1	ARIZONA	HOVRN5N6 230.00-MEAD S 230.00 ck=1	60	1.019
1_d	PERKINS 500.00-PERK PS1 500.00 ck=1	ARIZONA	HOVRN3N4 230.00-MEAD S 230.00 ck=1	61	1.02
1_d	PERKINS 500.00-PERK PS2 500.00 ck=1	ARIZONA	HOVRN3N4 230.00-MEAD S 230.00 ck=1	61	1.02
1_d	PERKINS 500.00-PERK PS1 500.00 ck=1	ARIZONA	HOVRN1N2 230.00-MEAD S 230.00 ck=1	62	1.018
1_d	PERKINS 500.00-PERK PS2 500.00 ck=1	ARIZONA	HOVRN1N2 230.00-MEAD S 230.00 ck=1	62	1.018
1_d	PERKINS 500.00-PERK PS1 500.00 ck=1	ARIZONA	HOVRA1A2 230.00-MEAD S 230.00 ck=1	63	1.019
1_d	PERKINS 500.00-PERK PS2 500.00 ck=1	ARIZONA	HOVRA1A2 230.00-MEAD S 230.00 ck=1	63	1.019
1_d	PALOVRDE 500.00-MIDPOINX 500.00 ck=1	ARIZONA	PEACOCK 345.00-MEAD 345.00 ck=1	73	1.182
1_d	PERKINS 500.00-PERK PS1 500.00 ck=1	ARIZONA	PEACOCK 345.00-MEAD 345.00 ck=1	73	1.074
1_d	PERKINS 500.00-PERK PS2 500.00 ck=1	ARIZONA	PEACOCK 345.00-MEAD 345.00 ck=1	73	1.074
1_d	PERKINS 500.00-PERK PS1 500.00 ck=1	ARIZONA	SIGURDPS 230.00-GLENCANY 230.00 ck=1	79	1.017
1_d	PERKINS 500.00-PERK PS2 500.00 ck=1	ARIZONA	SIGURDPS 230.00-GLENCANY 230.00 ck=1	79	1.017
1_d	PALOVRDE 500.00-MIDPOINX 500.00 ck=1	ARIZONA	LEATHERS 92.00-MIDWAY 92.00 ck=1	231	1.168
1_d	PALOVRDE 500.00-MIDPOINX 500.00 ck=1	ARIZONA	MEAD 500.00-PERKINS 500.00 ck=1	272	1.293
1_d	LIBTYPHS 230.00-LIBERTY 230.00 ck=1	ARIZONA	MEAD 500.00-PERKINS 500.00 ck=1	272	1.082
1_d	PALOVRDE 500.00-MIDPOINX 500.00 ck=1	ARIZONA	ELDORDO 500.00-LUGO 500.00 ck=1	303	1.22
1_d	PALOVRDE 500.00-MIDPOINX 500.00 ck=1	ARIZONA	LUGO 500.00-MIRALOMA 500.00 ck=2	331	1.18
1_d	PALOVRDE 500.00-MIDPOINX 500.00 ck=1	ARIZONA	LUGO 500.00-MIRALOMA 500.00 ck=3	332	1.179
1_d	PALOVRDE 500.00-MIDPOINX 500.00 ck=1	ARIZONA	LUGO 500.00-MOHAVE 500.00 ck=1	333	1.221
1_d	PALOVRDE 500.00-MIDPOINX 500.00 ck=1	ARIZONA	LUGO 500.00-MIRALOMA 500.00 ck=1	334	1.177
1_d	PALOVRDE 500.00-MIDPOINX 500.00 ck=1	ARIZONA	MOHAVE 500.00-ELDORDO 500.00 ck=1	355	1.222
1_d	PERKINS 500.00-PERK PS1 500.00 ck=1	ARIZONA	SERRANO 500.00-VALLEYSC 500.00 ck=1	390	1.073
1_d	PERKINS 500.00-PERK PS2 500.00 ck=1	ARIZONA	SERRANO 500.00-VALLEYSC 500.00 ck=1	390	1.073
1_d	PERKINS 500.00-PERK PS1 500.00 ck=1	ARIZONA	DEVERS 500.00-VALLEYSC 500.00 ck=1	601	1.169
1_d	PERKINS 500.00-PERK PS2 500.00 ck=1	ARIZONA	DEVERS 500.00-VALLEYSC 500.00 ck=1	601	1.169
1_d	PALOVRDE 500.00-MIDPOINX 500.00 ck=1	ARIZONA	INDIGO 115.00-TAP817 115.00 ck=1	640	1.174
1_d	PALOVRDE 500.00-MIDPOINX 500.00 ck=1	ARIZONA	J.HINDS 230.00-MIRAGE 230.00 ck=1	665	1.19
1_d	PALOVRDE 500.00-MIDPOINX 500.00 ck=1	ARIZONA	J.HINDS 230.00-EAGLEMTN 230.00 ck=1	666	1.19

Table 4
Lines and Transformer Over Loads Report
w/o PVD2 "Case 1"

1_d	PALOVRDE 500.00-MIDPOINX 500.00 ck=1	ARIZONA	MOENKOPI 500.00-ELDORDO 500.00 ck=1	705	1.235
1_d	PERKINS 500.00-PERK PS1 500.00 ck=1	ARIZONA	MOENKOPI 500.00-ELDORDO 500.00 ck=1	705	1.178
1_d	PERKINS 500.00-PERK PS2 500.00 ck=1	ARIZONA	MOENKOPI 500.00-ELDORDO 500.00 ck=1	705	1.178
1_d	PERKINS 500.00-PERK PS1 500.00 ck=1	ARIZONA	PARKER 230.00-GENE 230.00 ck=1	718	1.018
1_d	PERKINS 500.00-PERK PS2 500.00 ck=1	ARIZONA	PARKER 230.00-GENE 230.00 ck=1	718	1.018
1_d	PALOVRDE 500.00-MIDPOINX 500.00 ck=1	ARIZONA	BLYTHE 161.00-BLYTHESC 161.00 ck=1	719	1.171
1_d	PALOVRDE 500.00-MIDPOINX 500.00 ck=1	ARIZONA	LUGO 500.00-VICTORVL 500.00 ck=1	723	1.24
1_d	PERKINS 500.00-PERK PS1 500.00 ck=1	ARIZONA	HOVRA3A4 230.00-MEAD N 230.00 ck=1	730	1.02
1_d	PERKINS 500.00-PERK PS2 500.00 ck=1	ARIZONA	HOVRA3A4 230.00-MEAD N 230.00 ck=1	730	1.02
1_d	PERKINPS 500.00-WESTWING 500.00 ck=1	ARIZONA	PALOVRDE 500.00-MIDPOINX 500.00 ck=1	748	1.072
1_d	MOENKOPI 500.00-ELDORDO 500.00 ck=1	ARIZONA	PALOVRDE 500.00-MIDPOINX 500.00 ck=1	748	1.001
1_d	PERKINS 500.00-PERK PS1 500.00 ck=1	ARIZONA	PALOVRDE 500.00-MIDPOINX 500.00 ck=1	748	1.483
1_d	PERKINS 500.00-PERK PS2 500.00 ck=1	ARIZONA	PALOVRDE 500.00-MIDPOINX 500.00 ck=1	748	1.483
1_d	LIBTYPHS 230.00-LIBERTY 230.00 ck=1	ARIZONA	PALOVRDE 500.00-MIDPOINX 500.00 ck=1	748	1.165
1_d	PERKINPS 500.00-WESTWING 500.00 ck=1	ARIZONA	MIDPOINX 500.00-DEVERS 500.00 ck=1	749	1.072
1_d	MOENKOPI 500.00-ELDORDO 500.00 ck=1	ARIZONA	MIDPOINX 500.00-DEVERS 500.00 ck=1	749	1.004
1_d	PERKINS 500.00-PERK PS1 500.00 ck=1	ARIZONA	MIDPOINX 500.00-DEVERS 500.00 ck=1	749	1.484
1_d	PERKINS 500.00-PERK PS2 500.00 ck=1	ARIZONA	MIDPOINX 500.00-DEVERS 500.00 ck=1	749	1.484
1_d	LIBTYPHS 230.00-LIBERTY 230.00 ck=1	ARIZONA	MIDPOINX 500.00-DEVERS 500.00 ck=1	749	1.164
1_d	PERKINS 500.00-PERK PS1 500.00 ck=1	ARIZONA	HOVRA1A2 16.50-HOVRA1A2 230.00 ck=1	768	1.019
1_d	PERKINS 500.00-PERK PS2 500.00 ck=1	ARIZONA	HOVRA1A2 16.50-HOVRA1A2 230.00 ck=1	768	1.019
1_d	PERKINS 500.00-PERK PS1 500.00 ck=1	ARIZONA	HOVRN1N2 16.50-HOVRN1N2 230.00 ck=1	770	1.018
1_d	PERKINS 500.00-PERK PS2 500.00 ck=1	ARIZONA	HOVRN1N2 16.50-HOVRN1N2 230.00 ck=1	770	1.018
1_d	PERKINS 500.00-PERK PS1 500.00 ck=1	ARIZONA	HOVRN3N4 16.50-HOVRN3N4 230.00 ck=1	771	1.02
1_d	PERKINS 500.00-PERK PS2 500.00 ck=1	ARIZONA	HOVRN3N4 16.50-HOVRN3N4 230.00 ck=1	771	1.02
1_d	PERKINS 500.00-PERK PS1 500.00 ck=1	ARIZONA	HOVRN5N6 16.50-HOVRN5N6 230.00 ck=1	772	1.019
1_d	PERKINS 500.00-PERK PS2 500.00 ck=1	ARIZONA	HOVRN5N6 16.50-HOVRN5N6 230.00 ck=1	772	1.019
1_d	PERKINS 500.00-PERK PS1 500.00 ck=1	ARIZONA	HOVRN7N8 16.50-HOVRN7N8 230.00 ck=1	773	1.019
1_d	PERKINS 500.00-PERK PS2 500.00 ck=1	ARIZONA	HOVRN7N8 16.50-HOVRN7N8 230.00 ck=1	773	1.019
1_d	PALOVRDE 500.00-MIDPOINX 500.00 ck=1	ARIZONA	MEAD 345.00-MEAD N 230.00 ck=1	774	1.182
1_d	PERKINS 500.00-PERK PS1 500.00 ck=1	ARIZONA	MEAD 345.00-MEAD N 230.00 ck=1	774	1.075
1_d	PERKINS 500.00-PERK PS2 500.00 ck=1	ARIZONA	MEAD 345.00-MEAD N 230.00 ck=1	774	1.075
1_d	PALOVRDE 500.00-MIDPOINX 500.00 ck=1	ARIZONA	LIBERTY 345.00-LIBTYPHS 230.00 ck=1	780	1.19
1_d	PERKINS 500.00-PERK PS1 500.00 ck=1	ARIZONA	LIBERTY 345.00-LIBTYPHS 230.00 ck=1	780	1.082
1_d	PERKINS 500.00-PERK PS2 500.00 ck=1	ARIZONA	LIBERTY 345.00-LIBTYPHS 230.00 ck=1	780	1.082
1_d	PALOVRDE 500.00-MIDPOINX 500.00 ck=1	ARIZONA	LIBTYPHS 230.00-LIBERTY 230.00 ck=1	781	1.19
1_d	PERKINS 500.00-PERK PS1 500.00 ck=1	ARIZONA	LIBTYPHS 230.00-LIBERTY 230.00 ck=1	781	1.082

Table 4
Lines and Transformer Over Loads Report
w/o PVD2 "Case 1"

1_d	PERKINS	500.00-PERK PS2 500.00 ck=1	ARIZONA	LIBTYPHS	230.00-LIBERTY	230.00 ck=1	781	1.082
1_d	PERKINS	500.00-PERK PS1 500.00 ck=1	ARIZONA	DEVERS	500.00-DEVERS	230.00 ck=1	1189	1.017
1_d	PERKINS	500.00-PERK PS2 500.00 ck=1	ARIZONA	DEVERS	500.00-DEVERS	230.00 ck=1	1189	1.017
1_d	PERKINS	500.00-PERK PS1 500.00 ck=1	ARIZONA	DEVERS	500.00-DEVERS	230.00 ck=2	1290	1.017
1_d	PERKINS	500.00-PERK PS2 500.00 ck=1	ARIZONA	DEVERS	500.00-DEVERS	230.00 ck=2	1290	1.017

Sensitivity Case

BEP II connected to the proposed Midpoint Substation

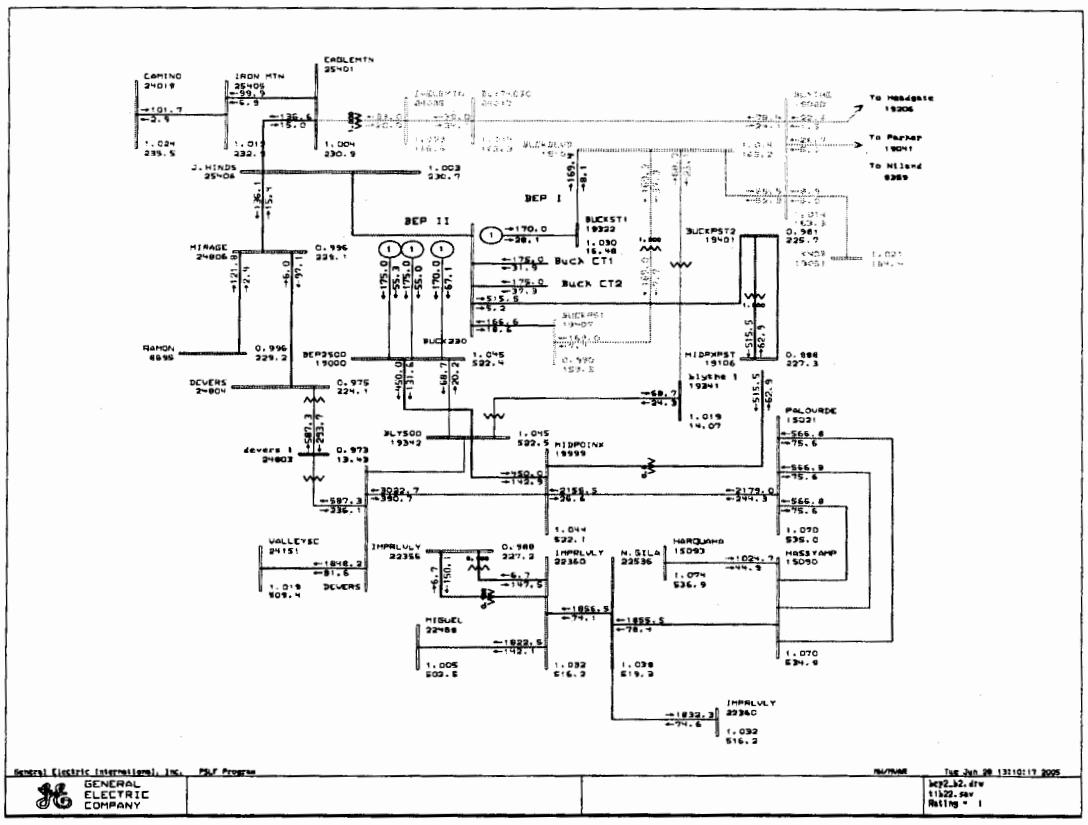

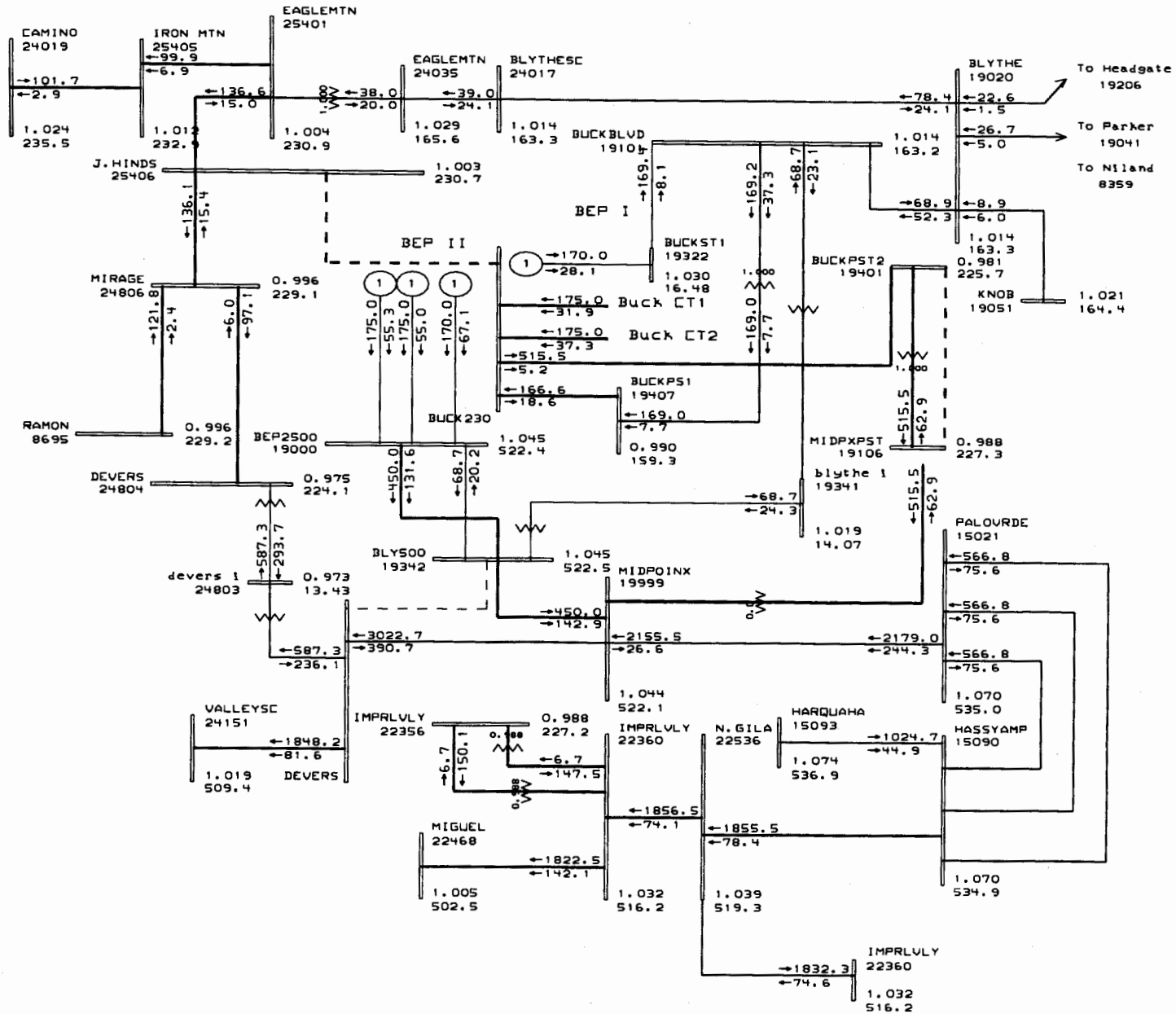

General Electric International, Inc. PSLF Program MW/MVAR Tue Jun 28 13:10:17 2005

GENERAL ELECTRIC COMPANY

bep2_b2.drw
t1b22.sav
Rating = 1

Short-Circuit :

1. The BEP II/DSTP, as configured in this SIS, can be accommodated on Western's system without the need to replace any of existing circuit breakers.

2. Short circuit duty study results, using 2008 system model data, indicate the potential for equipment capability to be exceeded on SCE's, MWD's system. These evaluations should be done concurrently by each utility in order for the project to be able to achieve a timely mitigation, if necessary, and to meet its target operating date. The BEP II project increases three-phase short-circuit duties at several buses, as shown in the table on the following page.

BEP II & DSTP ADDITIONS									
BUS NAME	BUS KV	TOTAL FAULT CURRENTS AND AFTER/BEFORE COMPARISONS							
		THREE PHASE				SINGLE PHASE			
		AMPERES		COMPARISON		AMPERES		COMPARISON	
		AFTER	BEFORE	RATIO	DIFF, AMPS	AFTER	BEFORE	RATIO	DIFF, AMPS
Buck Boulevard	525.0	6,934	---	---	---	7,502	---	---	---
BEP2	525.0	6,841	---	---	---	7,461	---	---	---
Blythe 2 CT1	16.0	71,962	---	---	---	49,070	---	---	---
Blythe 2 CT2	16.0	71,962	---	---	---	49,070	---	---	---
Blythe 2 ST1	16.0	81,496	---	---	---	51,826	---	---	---
Buck Blvd T3	13.8	30,343	---	---	---	0	---	---	---
Buck Boulevard	161.0	21,049	14,817	1.421	6,232	22,499	15,943	1.411	6,556
Blythe	161.0	20,620	14,731	1.400	5,889	21,200	15,420	1.375	5,780
Devers	525.0	14,979	13,046	1.148	1,934	11,695	10,053	1.163	1,641
Blythe Eng 3	16.0	109,972	104,246	1.055	5,726	88,087	85,576	1.029	2,511
Valley	525.0	15,744	15,000	1.050	744	11,128	10,647	1.045	482
Blythe Eng 1	16.0	102,629	98,683	1.040	3,946	84,929	83,095	1.022	1,834
Blythe Eng 2	16.0	102,428	98,526	1.040	3,902	84,837	83,021	1.022	1,816
Devers	230.0	26,417	25,460	1.038	957	25,139	23,958	1.049	1,181
Blythe KY1A	34.5	8,195	7,926	1.034	269	8,215	7,967	1.031	247
Headgate	161.0	6,180	6,010	1.028	169	5,174	5,088	1.017	86
Parker	161.0	9,133	8,909	1.025	224	10,826	10,610	1.020	216
Gold Mine Tap	161.0	5,298	5,169	1.025	129	3,473	3,425	1.014	48
Rainbow	525.0	9,801	9,612	1.020	190	6,980	6,872	1.016	108
Serrano	525.0	29,378	29,013	1.013	365	20,920	20,727	1.009	193
Mirage	230.0	13,510	13,375	1.010	135	11,204	11,109	1.009	95
Ramon	230.0	13,420	13,288	1.010	132	11,084	10,992	1.008	92
Niland	161.0	6,361	6,299	1.010	62	4,393	4,369	1.006	24
Devers	13.8	106,944	106,003	1.009	941	0	0	1.000	0
Knob	161.0	8,602	8,528	1.009	74	6,689	6,656	1.005	33
Rainbow PS	230.0	20,654	20,477	1.009	177	15,387	15,262	1.008	125
Bouse	161.0	4,202	4,167	1.008	35	3,004	2,991	1.004	12
Eagle Mountain	161.0	6,938	6,886	1.008	52	5,900	5,872	1.005	28
Mira Loma	525.0	34,218	33,981	1.007	237	25,575	25,459	1.005	116
Vista	230.0	43,025	42,729	1.007	297	37,156	36,981	1.005	175
Desalter	161.0	6,626	6,582	1.007	44	4,824	4,807	1.004	17
Coachella	230.0	11,518	11,443	1.007	75	9,051	9,004	1.005	47
Parker T6	13.2	46,472	46,173	1.006	299	0	0	1.000	0
Parker T5	13.2	46,465	46,166	1.006	299	0	0	1.000	0
Mira Loma	230.0	70,055	69,620	1.006	435	55,122	54,897	1.004	225
San Bernardino	230.0	34,301	34,097	1.006	204	34,552	34,399	1.004	153
Rainbow	230.0	22,903	22,767	1.006	136	16,491	16,390	1.006	101
Serrano	230.0	57,942	57,601	1.006	342	41,925	41,715	1.005	210
Headgate	69.0	4,352	4,327	1.006	25	4,727	4,707	1.004	21
Pilot Knob	161.0	8,974	8,923	1.006	51	7,882	7,854	1.004	28
Yucca	161.0	8,659	8,615	1.005	44	7,945	7,919	1.003	26
Eagle Mountain	230.0	6,121	6,091	1.005	30	5,987	5,967	1.003	21
Gold Mine	92.0	1,673	1,665	1.005	8	1,597	1,591	1.004	6
Parker	69.0	3,789	3,772	1.005	17	4,515	4,498	1.004	16

BEP2_after_4.sav: 2004_fall_case_r7, wml_gen_1 v29.idv, buck_525 v29.idv, Rainbow-Valley 525 in service

BEP2_before_4.sav: Same as BEP2_after_4.sav except that BEP2 is out of service.

NOTES:

1. The Parker-Blythe-Knob-Gila system is operated at 161-kV.
2. The Wellton-Mohawk Ligurta generation is included.
3. The Rainbow - Valley 525-kV branch is in service.
4. All busses for which the three-phase fault current increased by 0.5% or more are included.
5. The busses are arranged in descending order according to the percent increase of the three-phase fault current.
6. The PTI PSS/E program, version 29, was used using flat conditions and 1.0 p.u. volts.

Stability Studies:

Results of stability studies investigating worst-case N-1 and N-2 outages indicate that the system post Project shows:

1. No stability problems at any other IPP generating plants, or any of the federal hydro plants integrated within the WALC control area. Stability was maintained for all faults studied and contingencies showed damped oscillations.
2. For the DSTP 500 kV line outage between the extended Buck Blvd Substation and Devers the system is found to be marginally stable. The system becomes stable with well damped oscillations when implementing at BEP II two unit generators dropping. Western will require tripping two BEP II units for the outage of the DSTP 500 kV line and a Special Remedial Action Scheme RAS will be prepared. Operating studies using factory data will be conducted to validate the trip requirement.
3. For the N-2 of Coachella – Devers & Ramon – Mirage 230 kV lines outages, the system is marginally stable with the BEP II. However for the same outage without the BEP II, the system is stable. SCE needs to determine their requirements to mitigate this stability concern.

Post-Transient:

The BEP II/DSTP does not result in large changes to the voltage stability characteristics of Western's system and adjacent systems. All single contingencies were within the 7% post-transient limit for percent voltage change. All double contingencies were well within the 10% post-transient limit for percent voltage change.

Study Assumptions

7. STUDY ASSUMPTIONS

Western will conduct the System Impact Study (SIS) using the following assumptions:

1. The development of the new transmission facilities described in this report is funded by Caithness/DSTP.

2. Western determined through the comprehensive progress report prepared for BEP I dated September 2001, that all BEP I output can be accommodated on the Blythe area transmission system under normal system conditions. Also, Western's operating studies for BEP I determined the need for curtailing BEP I generation when any of the lines connecting to the Blythe Substation are monitored with power flow above 100% emergency rating for 20 minutes.

3. This SIS assumes that BEP I is connected to Western's Buck Boulevard 161 KV bus. As an addition to the BEPTL modifications, FPL may decide to complete BEP I Phase II upgrades. In this case, with a 230 kV bus at Buck Boulevard Substation, Western would prefer connecting both power plants to the Buck Boulevard Substation 230 kV bus.

4. MWD pumps are observed in the power flows to be a factor on the amount of overloads found on the lines between Julian Hinds, Mirage and Eagle Mtn. overloads can be observed for system normal conditions when the pumps are not running and the overloads become greater in the cases of N-1 line outage.

5. This SIS assumes, one new 500/230/161 kV transformer is installed at the Buck Boulevard Substation. The new 500 kV DSTP transmission line connecting the Buck Boulevard Expanded Substation 500 kV bus "BEP II 500" is in the SCE control area boundary.

6. If it is decided to add a 161/230 kV phase shifter in series with the DSTP interconnection transformer, a study will be needed to size the phase shifter, prepare a coordination plan for operation with other proposed phase shifters and to determine the need and size of shunt reactors.

7. There are five existing transmission lines connected to Western's 161 kV bus at Blythe; (1) An existing bus-tie connects Western's Blythe 161kV bus to SCE's Blythe 161kV bus (2&3) two Western 161 kV transmission lines to Parker, and (4&5) the tie lines with the IID system the Blythe to Niland and Blythe to Knob lines. Western uses a RAS that curtails BEP I generation for certain operating conditions, see RAS description included in Attachment #1

8. Short Circuit Studies do not include single phase-to-ground cases.

9. Monitored Areas & Zones in power flow runs include: IID, Arizona, Nevada, SCE and MWDP. Pre-contingency and Post–contingency bus voltages less than or greater, or equal to the listed criteria are monitored and recorded for each case run. The report addresses only criteria violations caused by the project.

10. All analyses would be conducted using GE-Positive Sequence Load Flow (GE-PSLF v.13.2) software from GE Power Systems and its programming language, EPCL.

11. This SIS study is not intended to be a transmission line rating study and it will not rate EOR/WOR transfer capability as a result for the change in network topology with the upgrades at the development of the DSTP.

Study Scope

8. Study Scope

1. Identification of transmission upgrades, on Western's DSW system, needed to mitigate any impacted facilities due to adding the Project.
2. Evaluation of the transmission capacity of the area transmission system, as well as, the bulk area transmission system.
3. Identification of overstressed equipment resulting from the addition of the Project on.
4. Determine if the addition of the Project would result in adverse impact on the stable operation of the Transmission System following various contingencies.
5. Steady State Power Flow Study: The SIS will investigate the system reinforcements needed on Western's system, only, to avoid system overloads and determine the amount of generation that would have to be curtailed, if any, to avoid any emergency thermal overload caused by BEP II/DSTP.
6. The SIS will investigate several dispatch scenarios to fully assess the system performance with the BEP II generation. The dispatch scenarios include:
    i. All WALC hydro and IPP generation dispatched to California per SCE/LADWP/SCE 50/35/15 scheduling rights
    ii. BEP I and BEP II dispatched to California
    iii. BEP I 525 MW to Julian Hinds
    iv. BEP I 350 MW to Julian Hinds 170 to Midpoint
7. Run Incremental:
    i. An incremental with + 100 MW from Palo Verde with Buck 161/500 kV closed. Check flow on DSTP
    ii. Run an incremental with + 100 MW from BEP II with Buck 161/500 kV closed. Check flow on DSTP and Palo Verde Devers
    iii. Run an incremental with + 100 MW from Palo Verde with Buck 161/500 kV open. Check flow on DSTP
    iv. Run an incremental with + 100 MW from Palo Verde with Buck 161/500 kV open. Check flow on DSTP

8. Power Flow Cases

This SIS will consider three pre-project starting cases of the interconnected transmission system represented for the following conditions:

1. Pre-Project bench mark cases. There will be three starting cases:

Case 1: Case 08 Light Autumn as modified by CAL-ISO and SCE; present system with Buck Julian Hinds interconnection, without Midpoint and with PVD2 . The PST will direct approximately 520 MW flow on to the 230-kV Buck-Julian Hinds tie.

Case 2: Case 08 Light Autumn as modified by CAL-ISO and SCE; present system with Midpoint – Buck interconnection, without Buck Julian Hinds and with PVD2. The PST will direct approximately 520 MW flow on to the Palo Verde-Devers system. The 230-kV Buck-Julian Hinds tie is modeled open.

Case 3: Case 08 Light Autumn as modified by CAL-ISO and SCE; present system with Midpoint – Buck interconnection, with Buck Julian Hinds and with PVD2. The PST will direct approximately 520 MW flow on to the Palo Verde-Devers system.

2. To ensure adequate stressing of Western's system the following applies:

1. Westerns project use loads in area 14, 19 will be scaled up to summer peak CROD. Westerns embedded system loads and transmission commitments at maximum.
2. WALC hydro power will be at high, IPP's in WALC control area will be at maximum output. The increased generation will be scheduled to Area 24 (SC). Area 24 generation scaled down as necessary, unless directed differently by SCE/CA-ISO.
3. The SCE PVD2 project is assumed in-service.
4. The liberty PST will be set to hold a 450 MW schedule.
5. The SRP EOR + 9000 upgrades will not be included.
6. The amount of series compensation on the PVD1 and PVD2 is to be modeled per SCE instructions.
7. MWDP pumps will be off (Eagle Mtn, Iron Mtn).
8. Western's Blythe area automated RAS scheme is considered as implemented, this means that BEP I generation is curtailed for power flows above 100 % after 20 minutes on any of the five 161-kV lines connected at Blythe.
9. Special Operating Procedures developed as pre-conditions for the Buck to Julian Hinds tie and/or for the Buck to Midpoint tie are assumed in place for control of the PST angles.
10. Additionally:
    An SOP developed to trip the 161/230 PST for loss of any Palo Verde to Midpoint and/or Midpoint to Devers line sections is applied
    An SOP developed to trip the 230-kV Julian Hinds tie for an overload on the Blythe Buck Blvd 161-kV tie is applied.
11. Monitor flows on areas 14 (APS), 24 (SCE), 8 (IID). Cases will document flows on path 42, path 49, and path 9.

3- Post project cases:

1. Re-run the three pre-project cases with BEP II/DSTP modeled as a radial 500-kV transmission line from Buck Blvd (expanded substation) to the Devers 500-kV Substation with a 161/230 to 500 kV transformers at Buck Blvd connecting to the Buck bus. Case 1a_ post, Case 1b_post and Case 1c_post will be with the tie between BEP2500 bus and Buck Blvd open.

2. Case 2 post will be same as case 1 post but with the tie between BEP2500 bus to Buck Blvd closed
3. A third case, case 3 post, will be developed as a sensitivity case. In this case BEP I generation is scheduled on Western's system using its transmission rights and BEP II generation is scheduled to the Phoenix area.
4. The post –project case with the Julian Hinds interconnection only i.e. without Midpoint will be run with PVD2 out and in-service
5. A post-project case with BEP II out put at zero and the Buck Blvd-Devers line thru BEP2500 in-service
6. Western assumes that BEP II generation will be tripped for a scheduled maintenance outage at the Buck Blvd 500-kV Substation or for a forced outage resulting in the loss of a 500 kV path to Devers.
7. Western's studies for the 230-kV Julian Hinds interconnection and the Midpoint interconnection as well as with both interconnections in-service found positive angular damping and no stability problems. This is a starting point for the BEP/DSTP stability evaluations.
8. Perform N-1 and N-2 contingency analysis for study I –III
9. Perform an assessments of system voltages (steady-state and post-transient)

4. Dynamic Stability Study: Dynamic stability study will be conducted to determine if the addition of the BEP II would result in any adverse impact on system stability during the following contingencies:
   1. A three-phase fault, normal 5 cycles clearing, at the Buck Boulevard 500 kV bus followed by loss of the Buck Boulevard – Devers 500 kV line.
   2. A three-phase fault, normal 5 cycles clearing, at the Buck Boulevard 161 kV bus followed by loss of the 500/161 kV transformer.

5. Short Circuit Study: Short Circuit studies will be conducted to determine the fault duties on Western's facilities in the Blythe area before and after the proposed project addition. The fault duty results will then be used to identify any overstressed equipment that results solely from the addition of the BEP II and DSTP. The Short Study results will be used to establish protection requirements and identify protection modifications, if needed, at the nearby transmission substations.

STUDY CASE DEVELOPMENT

9. STUDY CASE DEVELOPMENT

In this report the DSW high voltage transmission system and interconnected transmission system is examined during the period represented in the WECC base cases modified for year 2008-9.

The Report includes a contingency analysis of the high voltage system in the study area including Western, SCE, IID and APS service areas .Pre-contingency and Post – contingency bus voltages less than or greater, or equal to the listed criteria are monitored and recorded for each case run. The report highlights all criteria violations caused by the project. The study is performed in accordance with the WECC Reliability Criteria for System Design. All alternatives were evaluated using worst-case outage (level A, N-1) system configurations

All power flow base case solutions allowed all regulating elements (e.g. transformer LTC's, regulating phase shifters, switchable shunt devices, area interchange regulation) to control their appropriate set points. For outage cases, all regulating elements were fixed at the values set in the base case prior to the outage.

The power flow studies in this report were run using the following Base Case system models:

The base cases representing 2009 Heavy Autumn EOR (2009 HA EOR) with and without Mohave generation were built from the current WATS-approved Path 49 Series Capacitor Upgrade Project 2005 Heavy Autumn study case. Area information including load and generation in SCE, Arizona, LADWP, IID, and SDG&E was projected to 2009 HA system conditions. The pre-project HA base cases with and without Mohave generation each have an EOR flow of 8,055 MW. The line (i.e. Harquahala–Devers 500 kV) and other upgrades associated with DPV2, and related schedules were added to the pre-project base cases to develop the post-project base cases. In the post-project base cases with and without Mohave generation, the EOR flow is 9,255 MW based on SCE/LADWP/SDG&E schedule shares of 55%/30%/15%. Cases modified for this SIS:

Case 1: 2009 HA EOR pre-project case without Mohave generation
Case 2: is the same as case 1 but with the addition of PVD2

DPV2 Transmission Line Project Assumptions by SCE:

a. Path 49 Series Capacitor Upgrade Project: It is assumed that these upgrades are in service in the pre-project condition. The upgrades consist of the following:
   - Series capacitor upgrades on the Palo Verde-Devers and Hassayampa-North Gila-Imperial Valley 500 kV lines.
   - A new 500/230 kV transformer is modeled at Devers Substation.
   - A new 300 MVA 230 kV degree phase shifting transformer is modeled between SDG&E's IV Substation and IID's El Centro Substation.

- Dynamic Voltage Support

b. Centennial Transmission Project is assumed to be in service. The project consists of three new 500 kV lines and associated facilities necessary to deliver 3,000 MW of new generation interconnected at the Harry Allen Substation to the southern Nevada area.

c. Addition of Oak Valley Sub connected to the Devers-San Bernardino 230 kV No. 2 line.

d. Loop the existing Lugo-Serrano 500 kV line into the Mira Loma 500 kV Substation.

e. Addition of a third transformer bank at Sylmar (Path 41).

Case 3: Case received from CAISO for a system base case computer models for 2008 2008 autumn conditions with only the DPV1 line and more stressed flows on Path 49's southern system transmission lines. Case 4 is the same case but with the addition of PVD2

BEP II/DSTP INTEGRATION TO BLYTHE AREA TRANSMISSION SYSTEM – THE EXPANDED BUCK BLVD TO DEVERS CONFIGURATION

Case2 _ a
With PVD2
From case 09hapostdpv2mohoff_aprvd.sav

1. 3013 MW From Arizona into Devers Substation
2. Buck Blvd – Julian Hinds 230 kV tie 351 MW
3. Buck Blvd – Midpoint 230 kV tie 161 MW
4. Extended Buck Blvd – Devers 500 kV line 549 MW
5. EOR 9218 MW
6. WOR 8691 MW
7. WALC area generation 4311 MW

Note:

A. Bus Bly500 # 19342 is a new 500 kV bus located in the Extended Buck Blvd Substation
B. Bus BEP2500 # 19000 is a new 500 kV bus located in the BEP II power plant switchyard
C. Bus MIDPOINX # 19999 is the FPL/SCE Midpoint Substation new 500 kV Bus
D. The tie between Midpoint and Buck Blvd Substations is 230 kV
E. The proposed FPL/SCE Buck Blvd-Julian Hinds 230 kV tie is closed
F. The connections of the existing Blythe Energy power plant (BEP I), owned and operated by Florida Power, are changed as proposed by the Blythe phase II modifications. The two combustion units Buck CT1 & CT2 are connected to a new Buck Blvd 230 kV bus "Buck230" # 19400. The steam unit Buck ST1 stays connected to the Buck Blvd 161 kV bus # 19101
G. The proposed new BEP II power plant units are represented as Bly2CT1 & CT2 and Bly 2St1 bus numbers 19903-19905. These are connected to a 500 kV collector bus BEP2500.
H. The new 500 kV line connecting the Extended Buck Blvd 500 kV bus "Bly500" # 19342 to the Devers Substation is modeled as shown in I below.

I. Line Impedances. Special attention; the series compensation on the Palo Verde – Midpoint- Devers 500 kV line sections are modeled per the Midpoint Interconnection studies. SCE is requested to validate this representation.

FROM-	---FR---	-BKV-	---TO--	---TO---	-BKV-	CK	SE	ST	(-R-- PU-	---X- PU)	--B-PU-	-MVA1-	-MVA2-	-M
14012	HARQJNCT	500	24801	DEVERS	500	1	1	0	0.0005	0.0116	0.8558	3420.8	4615.9	:

14012	HARQJNCT	500	24801	DEVERS	500	1	2	0	0	-0.0104	0	2338.2	3156.7
14012	HARQJNCT	500	24801	DEVERS	500	1	3	0	0.0011	0.0265	1.95	3420.8	4615.9
14012	HARQJNCT	500	24801	DEVERS	500	1	4	0	0	-0.016	0	2338.2	3156.7
14012	HARQJNCT	500	24801	DEVERS	500	1	5	0	0.0006	0.0154	1.137	3420.8	4615.9
15021	PALOVRDE	500	24801	DEVERS	500	1	1	0	0.0006	0.0147	1.081	3420.8	4615.9
15021	PALOVRDE	500	24801	DEVERS	500	1	2	0	0	-0.0104	0	2338.3	3156.7
15021	PALOVRDE	500	24801	DEVERS	500	1	3	0	0.0011	0.0265	1.95	3420.8	4615.9
15021	PALOVRDE	500	24801	DEVERS	500	1	4	0	0	-0.016	0	2338.3	3156.7
15021	PALOVRDE	500	24801	DEVERS	500	1	5	0	0.0006	0.0154	1.137	3420.8	4615.9
15093	HARQUAHA	500	24801	DEVERS	500	1	1	1	0.0006	0.0143	1.0512	3420.8	4615.9
15093	HARQUAHA	500	24801	DEVERS	500	1	2	1	0	-0.0104	0	2338.2	3156.3
15093	HARQUAHA	500	24801	DEVERS	500	1	3	1	0.0009	0.0219	1.6118	3420.8	4615.9
15093	HARQUAHA	500	24801	DEVERS	500	1	4	1	0	-0.016	0	2338.2	3156.3
15093	HARQUAHA	500	24801	DEVERS	500	1	5	1	0.0006	0.0143	1.0512	3420.8	4615.9
19999	MIDPOINX	500	24801	DEVERS	500	1	1	1	0.0005	0.0132	0.975	3420.8	4615
19999	MIDPOINX	500	24801	DEVERS	500	1	2	1	0	-0.0215	0	2338.3	2987.7
19999	MIDPOINX	500	24801	DEVERS	500	1	3	1	0.0006	0.0154	1.137	3420.8	4615
19342	BLY500	500	24801	DEVERS	500	1	1	1	0.0006	0.0132	0.975	3420	0
19342	BLY500	500	24801	DEVERS	500	1	2	1	0	-0.016	0	2338	0
19342	BLY500	500	24801	DEVERS	500	1	3	1	0.0006	0.0154	1.137	3420	0

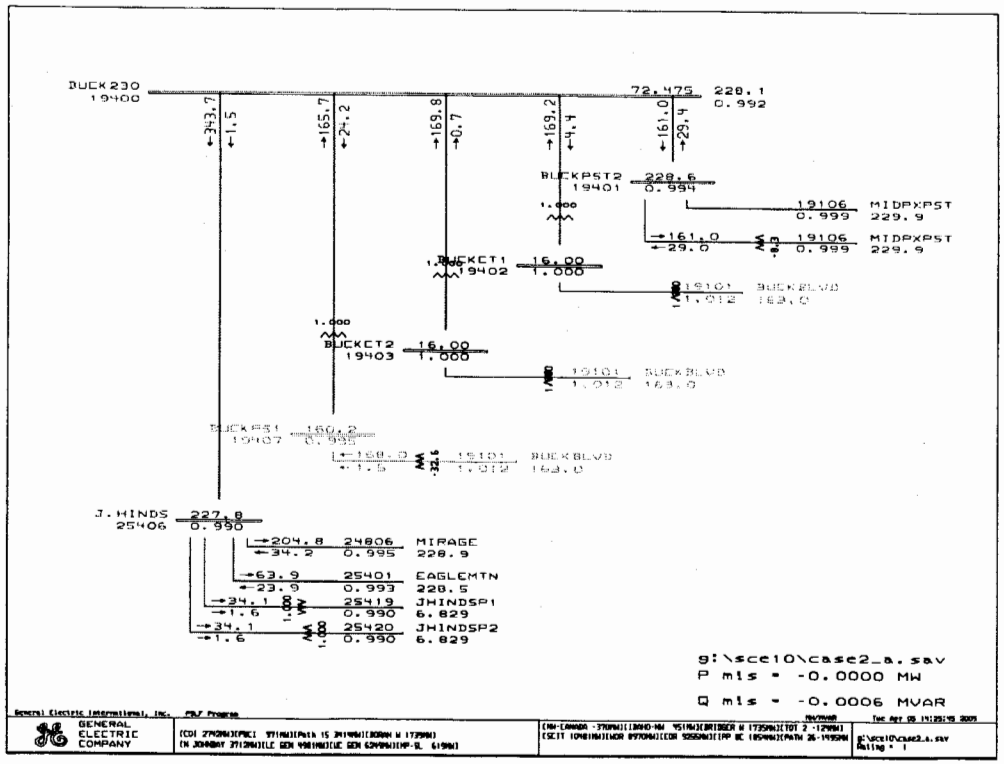
BUCK230
19400
72.475
228.1
0.992
BUCKPST2
19401
228.6
0.994
19106
MIDPXPST
0.999
229.9
BUCKCT1
19402
16.00
1.000
BUCKCT2
19403
16.00
1.000
BUCKPST1
19407
BUCKBLVD
J.HINDS
25406
227.8
0.990
MIRAGE
24806
228.9
EAGLEMTN
25401
228.5
JHINDSP1
25419
6.829
JHINDSP2
25420
6.829
g:\sce10\case2_a.sav
P mis = -0.0000 MW
Q mis = -0.0006 MVAR
GENERAL ELECTRIC COMPANY

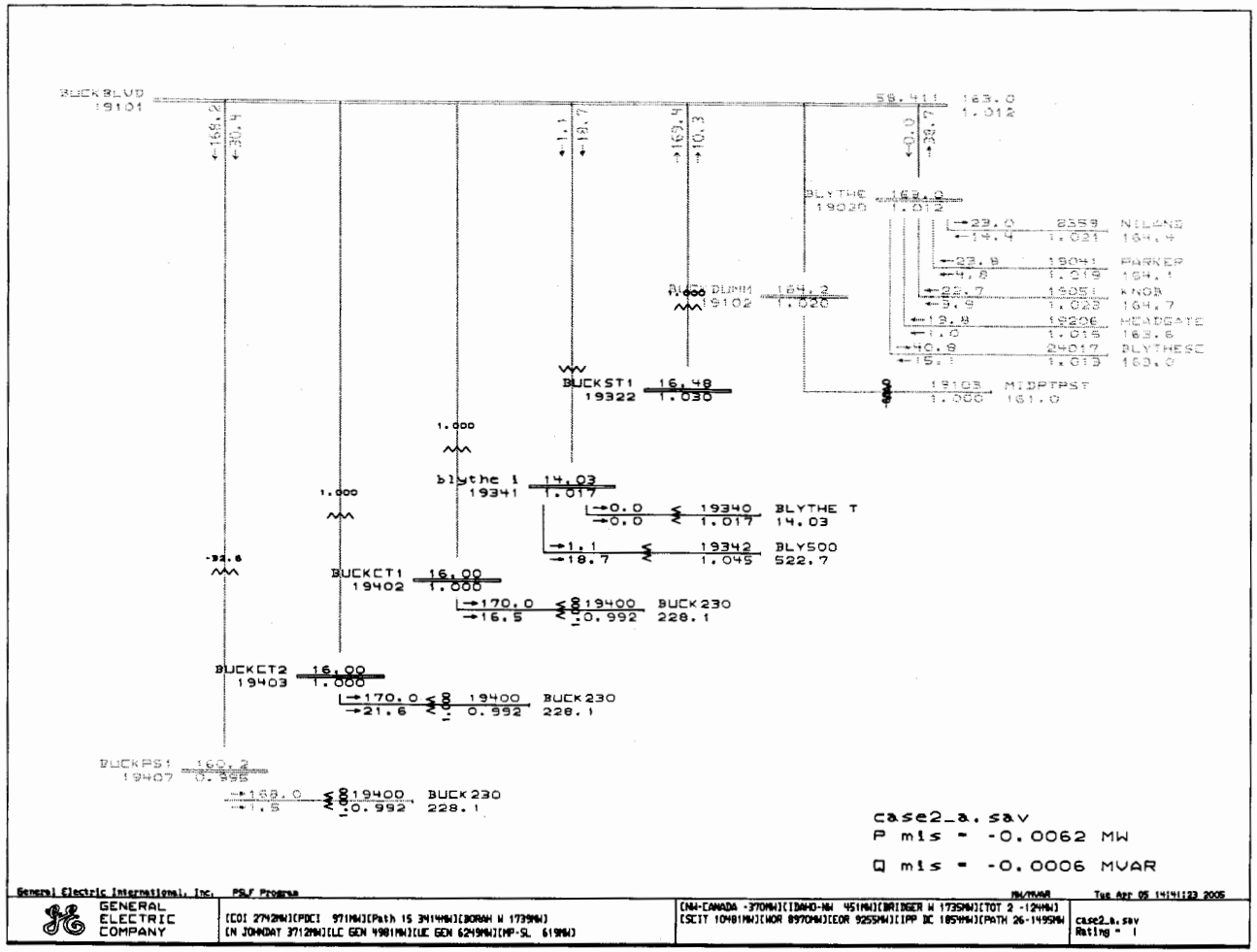
BUCKBLVD
19101
BLYTHE
19020
DUNN
19102
BUCKST1
19322
blythe 1
19341
BLYTHE T
14.03
BLY500
522.7
BUCKCT1
19402
BUCK230
228.1
BUCKCT2
19403
BUCKPS1
19407
NILAND
PARKER
KNOB
HEADGATE
BLYTHESC
MIDPTPST
case2_a.sav
P mis = -0.0062 MW
Q mis = -0.0006 MVAR
General Electric International, Inc.
PSLF Program
GENERAL
ELECTRIC
COMPANY

Case1 _ a
Without PVD2
From case 09hpredpv2mohoff_aprvd.sav

8. 3013 MW From Arizona into Devers
9. Buck Blvd – Julian Hinds 230 kV 351 MW
10. Buck Blvd – Midpoint 230 kV 161 MW
11. Extended Buck Blvd – Devers 500 kV 549 MW
12. EOR 8417 MW
13. WOR 7679 MW
14. WALC area generation 5460 MW

Note:

A. Bus Bly500 # 19342 is a new 500 kV bus located in the Extended Buck Blvd Substation
B. Bus BEP2500 # 19000 is a new 500 kV bus located in the BEP II power plant switchyard
C. Bus MIDPOINX # 19999 is the FPL/SCE Midpoint Substation new 500 kV Bus
D. The tie between Midpoint and Buck Blvd Substations is 230 kV
E. The proposed FPL/SCE Buck Blvd-Julian Hinds 230 kV tie is closed
F. The connections of the existing Blythe Energy power plant (BEP I), owned and operated by Florida Power, are changed as proposed by the Blythe phase II modifications. The two combustion units Buck CT1 & CT2 are connected to a new Buck Blvd 230 kV bus "Buck230" # 19400. The steam unit Buck ST1 stays connected to the Buck Blvd 161 kV bus # 19101

G. The proposed new BEP II power plant units are represented as Bly2CT1 & CT2 and Bly 2St1 bus numbers 19903-19905. These are connected to a 500 kV collector bus BEP2500.

H. The new 500 kV line connecting the Extended Buck Blvd 500 kV bus "Bly500" # 19342 to the Devers Substation is modeled as shown in I below.

I. Line Impedances. Special attention; the series compensation on the Palo Verde – Midpoint- Devers 500 kV line sections are modeled per the Midpoint Interconnection studies. SCE is requested to validate this representation.

FROM-	---FR---	-BKV-	---TO--	---TO---	CK S	E	ST	(-R-- PU-	---X- PU)	--B-PU-	-MVA1-	-MVA2-	-MVA3-	-M
14012	HARQJNCT	500	24801	DEVERS	1	1	0	0.0005	0.0116	0.8558	3420.8	4615.9	3420.8	4
14012	HARQJNCT	500	24801	DEVERS	1	2	0	0	-0.0104	0	2338.2	3156.7	2338.2	3
14012	HARQJNCT	500	24801	DEVERS	1	3	0	0.0011	0.0265	1.95	3420.8	4615.9	3420.8	4
14012	HARQJNCT	500	24801	DEVERS	1	4	0	0	-0.016	0	2338.2	3156.7	2338.2	3
14012	HARQJNCT	500	24801	DEVERS	1	5	0	0.0006	0.0154	1.137	3420.8	4615.9	3420.8	4
15021	PALOVRDE	500	24801	DEVERS	1	1	0	0.0006	0.0147	1.081	3420.8	4615.9	3420.8	4
15021	PALOVRDE	500	24801	DEVERS	1	2	0	0	-0.0104	0	2338.3	3156.7	2338.3	3
15021	PALOVRDE	500	24801	DEVERS	1	3	0	0.0011	0.0265	1.95	3420.8	4615.9	3420.8	4
15021	PALOVRDE	500	24801	DEVERS	1	4	0	0	-0.016	0	2338.3	3156.7	2338.3	3
15021	PALOVRDE	500	24801	DEVERS	1	5	0	0.0006	0.0154	1.137	3420.8	4615.9	3420.8	4
19342	BLY500	500	24801	DEVERS	1	1	1	0.0006	0.0132	0.975	3420	0	0	
19342	BLY500	500	24801	DEVERS	1	2	1	0	-0.016	0	2338	0	0	
19342	BLY500	500	24801	DEVERS	1	3	1	0.0006	0.0154	1.137	3420	0	0	
19999	MIDPOINX	500	24801	DEVERS	1	1	1	0.0006	0.0132	0.975	3420	0	0	
19999	MIDPOINX	500	24801	DEVERS	1	2	1	0	-0.0215	0	2338	0	0	
19999	MIDPOINX	500	24801	DEVERS	1	3	1	0.0005	0.0154	1.137	3420	0	0	

BEP II/DSTP INTEGRATION TO BLYTHE AREA TRANSMISSION SYSTEM – THE EXPANDED BUCK BLVD TO DEVERS CONFIGURATION

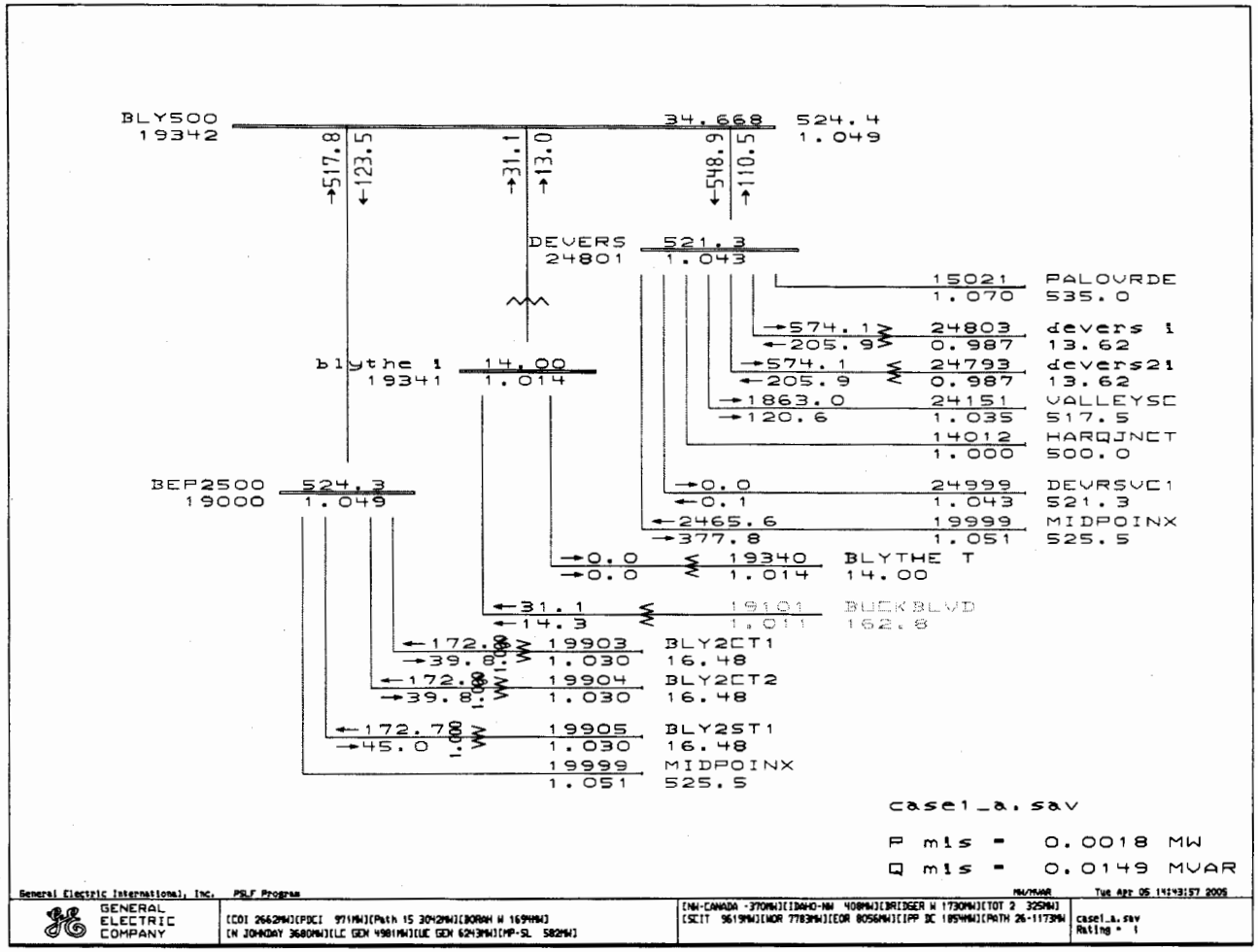

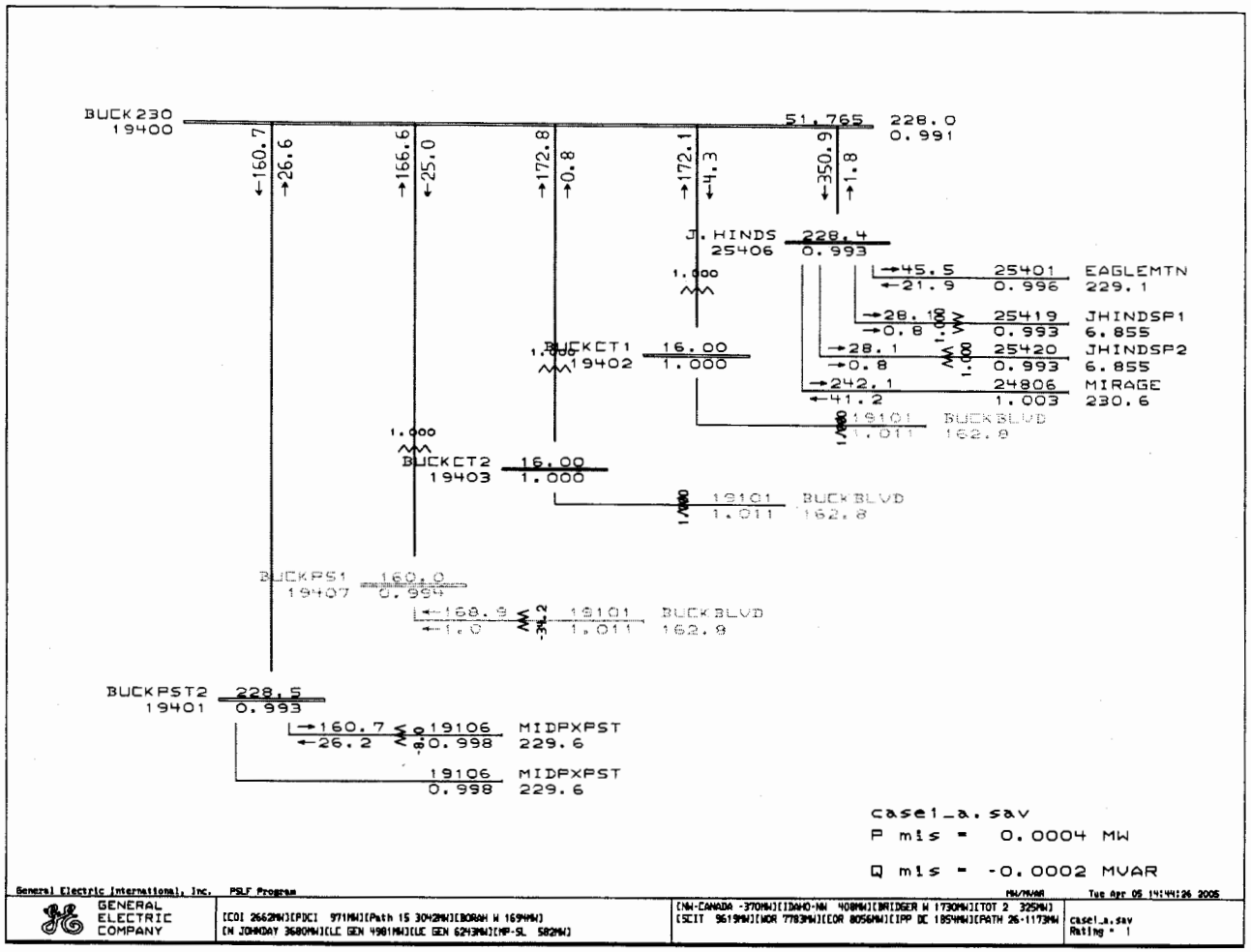
BUCK230
19400
51.765
228.0
0.991
J. HINDS
25406
228.4
0.993
EAGLEMTN
229.1
JHINDSP1
6.855
JHINDSP2
6.855
MIRAGE
230.6
BUCKCT1
19402
16.00
1.000
BUCKCT2
19403
16.00
1.000
BUCKBLVD
162.8
BUCKPS1
19407
160.0
0.994
BUCKPST2
19401
228.5
0.993
MIDPXPST
229.6
case1_a.sav
P mis = 0.0004 MW
Q mis = -0.0002 MVAR
General Electric International, Inc. PSLF Program
GENERAL ELECTRIC COMPANY

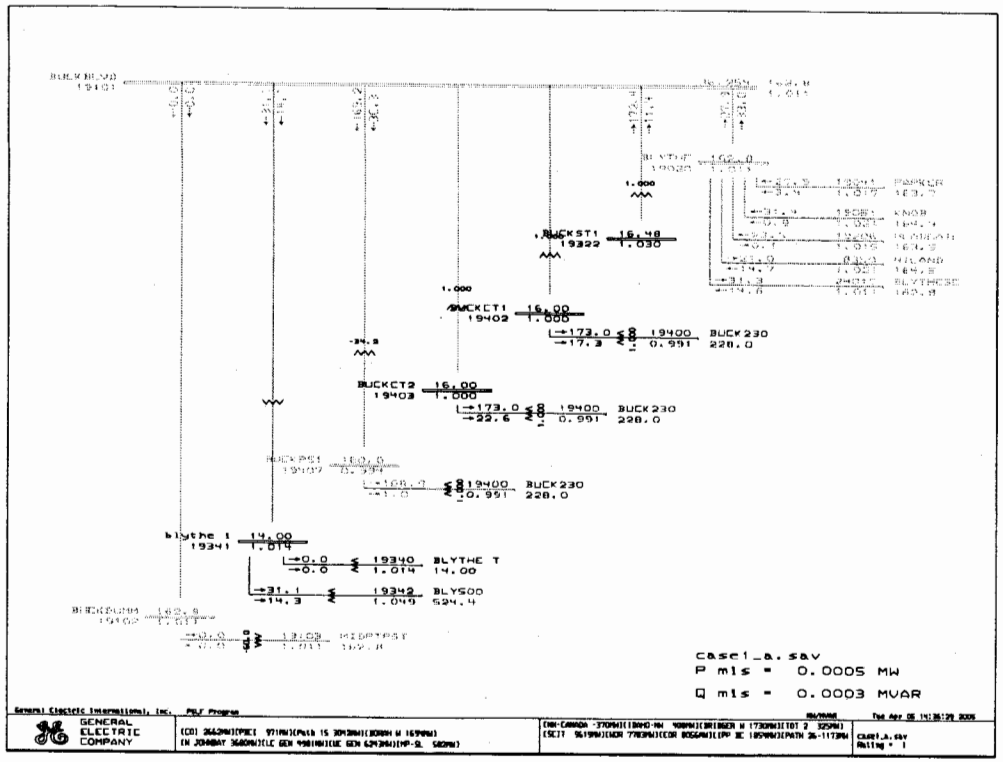
BUCKST1
19322
16.48
1.030
BUCKCT1
19402
16.00
1.000
BUCK230
228.0
BUCKCT2
19403
16.00
1.000
BUCK230
228.0
BUCK230
228.0
blythe 1
19341
14.00
1.014
19340
BLYTHE T
14.00
19342
BLYSOO
524.4
case1_a.sav
P mis = 0.0005 MW
Q mis = 0.0003 MVAR
GENERAL
ELECTRIC
COMPANY

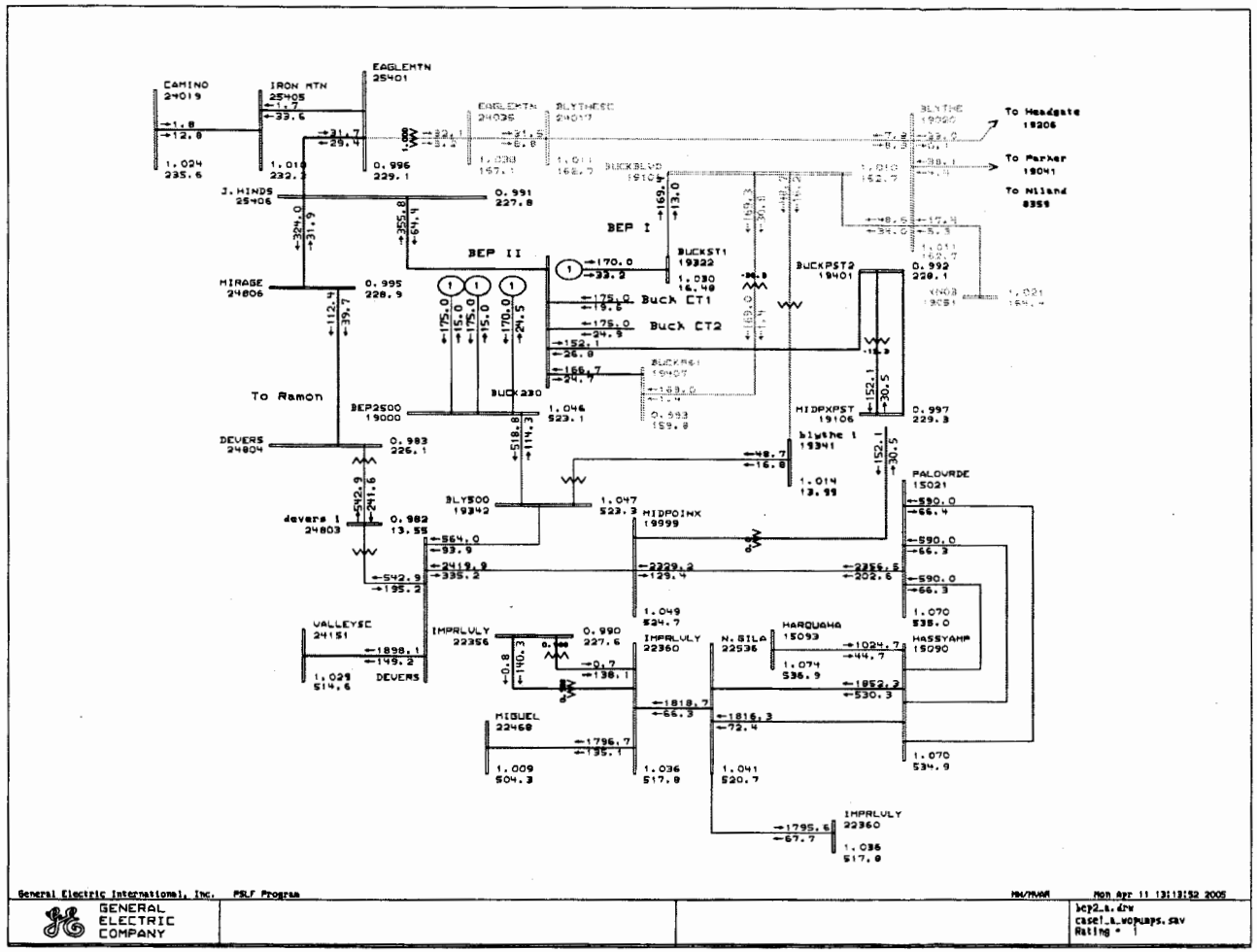

General Electric International, Inc. PSLF Program MW/MVAR Mon Apr 11 13:13:52 2005

GENERAL ELECTRIC COMPANY

bep2_a.drw
case1_a_wopumps.sav
Rating =

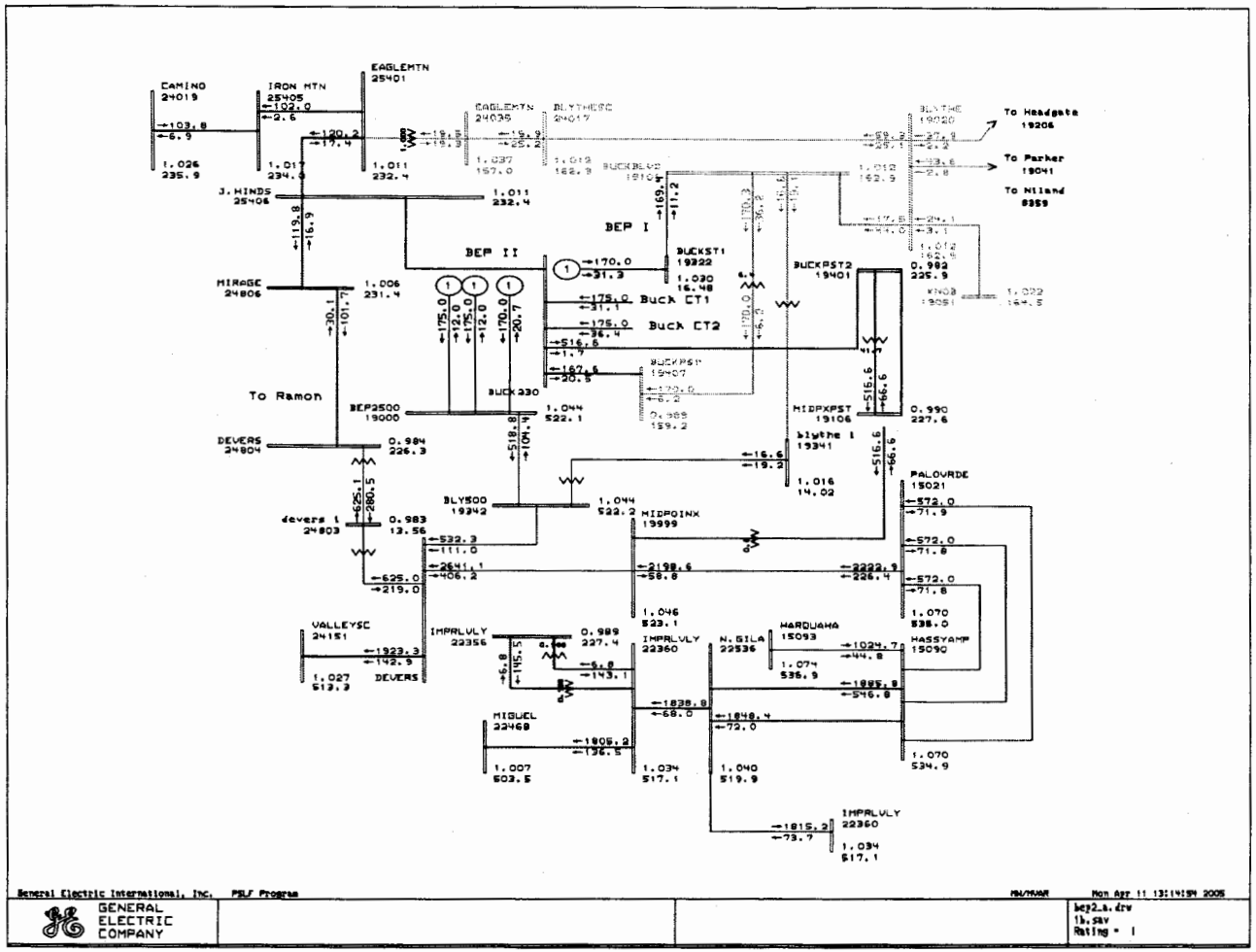
CAMINO
24019
IRON MTN
25405
EAGLEMTN
25401
J. HINDS
25406
MIRAGE
24806
To Ramon
DEVERS
24804
devers 1
24803
VALLEYSC
24151
DEVERS
EAGLEMTN
24035
BLYTHESC
24017
BUCKBLVD
19104
BEP I
BEP II
BUCKST1
19322
Buck CT1
Buck CT2
BUCKPST1
19407
BUCKPST2
19401
BUCK230
BEP2500
19000
BLY500
19342
MIDPOINX
19999
MIDPXPST
19106
blythe 1
19341
PALOVRDE
15021
IMPRLVLY
22356
IMPRLVLY
22360
N. GILA
22536
HARQUAHA
15093
HASSYAMP
15090
MIGUEL
22468
IMPRLVLY
22360
To Headgate
19208
To Parker
19041
To Niland
8359
General Electric International, Inc.
GENERAL
ELECTRIC
COMPANY

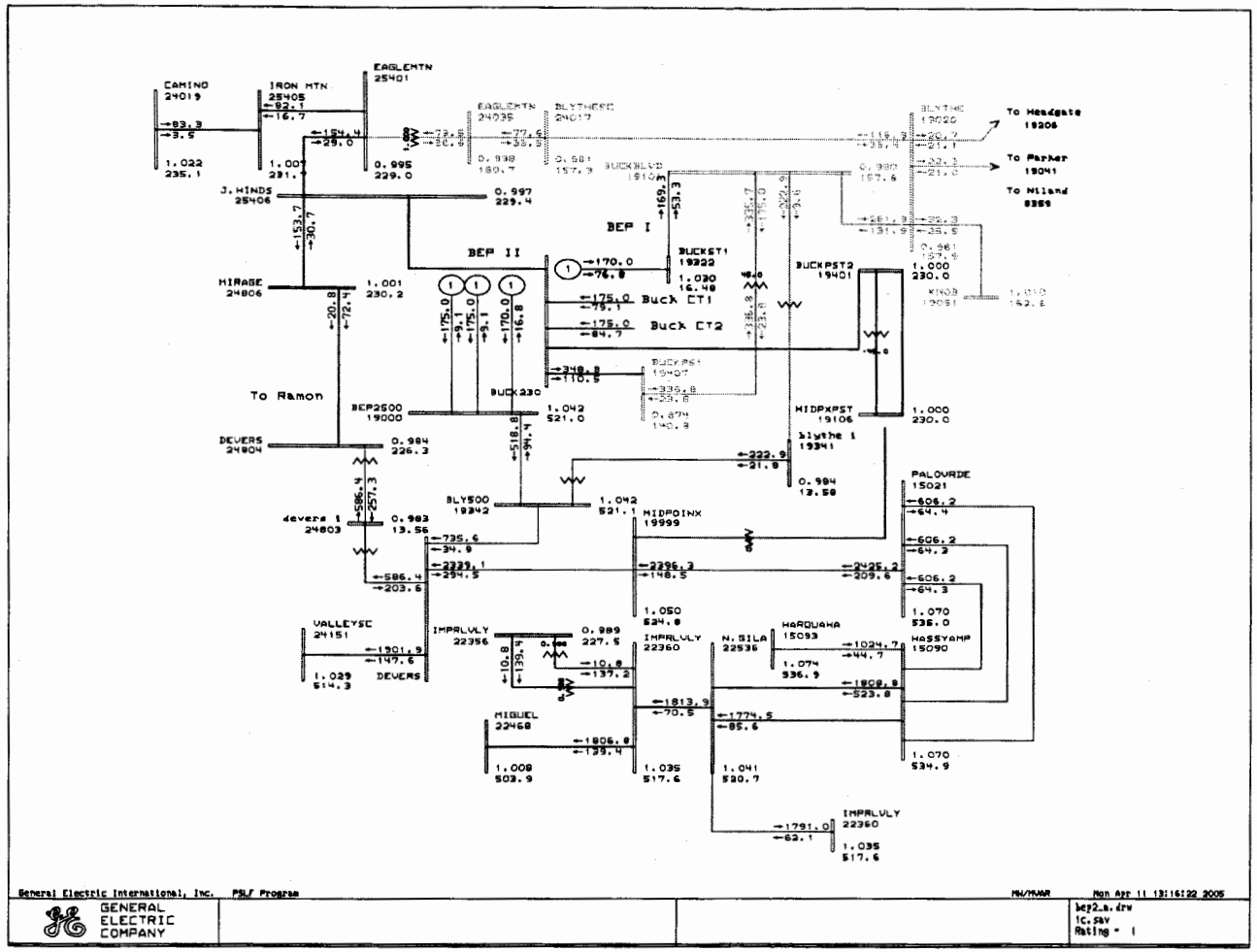

General Electric International, Inc. PSLF Program MW/MVAR Mon Apr 11 13:16:22 2005

GENERAL ELECTRIC COMPANY

bep2_a.drw
1C.sav
Rating - 1

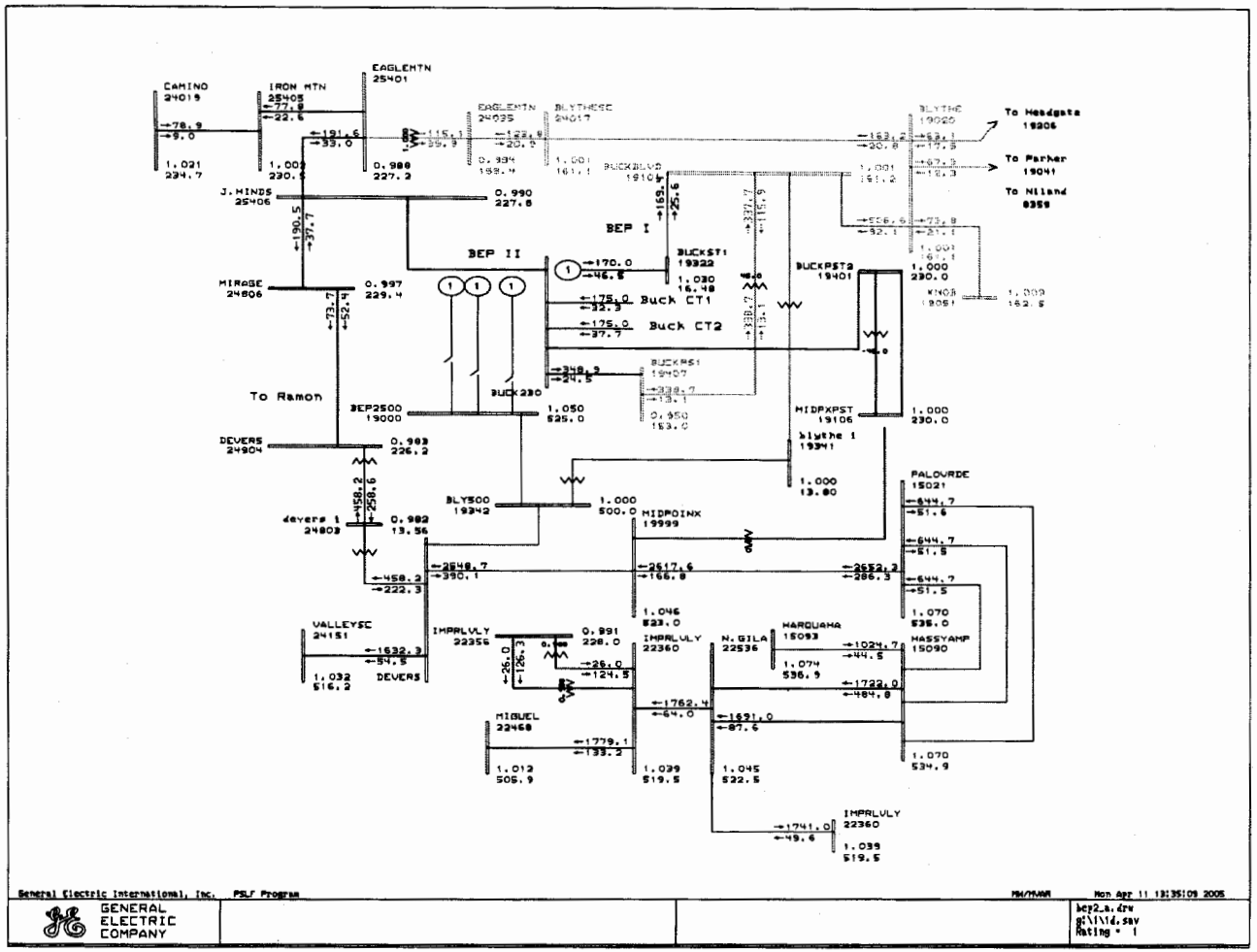
CAMINO
24019
IRON MTN
25405
EAGLEMTN
25401
EAGLEMTN
24035
BLYTHESC
24017
BLYTHE
19020
To Headgate
19206
To Parker
19041
To Niland
8359
J.HINDS
25406
BUCKBLVD
19104
BEP I
BEP II
BUCKST1
19322
BUCKPST2
19401
MIRAGE
24806
Buck CT1
Buck CT2
BUCKPS1
19407
To Ramon
BEP2500
19000
BUCK230
MIDPXPST
19106
blythe 1
19341
DEVERS
24904
PALOVRDE
15021
BLY500
19342
MIDPOINX
19999
devers 1
24803
VALLEYSC
24151
IMPRLVLY
22356
IMPRLVLY
22360
N.GILA
22536
HARQUAHA
15093
HASSYAMP
15090
DEVERS
MIGUEL
22468
IMPRLVLY
22360
General Electric International, Inc.
PSLF Program
Mon Apr 11 13:35:09 2005
GENERAL
ELECTRIC
COMPANY
bep2_a.drw
g:\1\1d.sav
Rating = 1