DOCKET
05-AFC-1
DATE JAN 23 2006
RECD. JAN 23 2006

PASTORIA ENERGY FACILITY, LLC.
PASTORIA ADDITION

TECHNICAL ASSESSMENT STUDY

January 19, 2006

SOUTHERN CALIFORNIA
EDISON
An *EDISON INTERNATIONAL*℠ Company

Prepared by

Jorge Chacon

Southern California Edison Company

for Patricia L. Arons
Manager, Transmission
Interconnection Planning

36224

EXECUTIVE SUMMARY

Southern California Edison Company (SCE) performed and delivered a System Impact Study as requested by Pastoria Energy Facility, LCC (PEF) to identify the impacts associated with interconnection of a new gas fired generator with a net output of 157 MW (PEF Addition). The System Impact Study, titled "Pastoria Energy Facility, LCC - Pastoria Addition" dated May 13, 2005 was performed by adding the proposed project to the system arrangement which included the addition of the SCE Antelope Transmission Project and all generation projects ahead in queue. The SCE Antelope Transmission Project consists of a new Antelope-Pardee 500 kV, Antelope-Vincent 500 kV and new Antelope-Tehachapi 500 kV transmission line all energized at 230 kV. The results of the study identified the need for additional capacity to integrate queued generation projects ahead of the Pastoria Addition.

With the inclusion of the PEF Addition, the need for upgrades was found to be further exacerbated. In particular, the results of the study identified a base case overload problem on the existing Antelope-Mesa and Pastoria-Pardee-Warne 230 kV transmission lines as well as a new Cottonwind-Antelope 230 kV transmission line (formed by looping existing Antelope-Magunden No.2 230 kV into the new Cottonwind Substation). In addition, a number of single and double contingencies were identified to result in overloading numerous existing facilities therefore requiring either a new Special Protection System to be implemented or additional transmission upgrades. The system impact study recommended that technical assessments be undertaken to include transmission upgrades needed to integrate generation projects queued ahead of the PEF Addition. This study provides the study results of the technical assessments.

LOAD FLOW RESULTS

With the additional transmission line upgrades necessary to support generation projects in queue ahead of the PEF Addition modeled in this Technical Assessment, all base case overload problems previously identified in the System Impact Study report were mitigated. In addition, all single contingency overload problems previously identified under heavy summer load conditions were mitigated. Under light spring load conditions, all but four single contingencies were mitigated. To mitigate the four remaining single contingencies impacting two transmission lines, a new special protection system or modification to the existing PEF special protection system will be required. A total of nine likely double contingencies impacting six different 230 kV transmission lines were identified. The maximum amount of generation tripping required to mitigate both stability (tripping Big Creek) and thermal overload (tripping PEF) under loss of two transmission lines was found to be 1,301 MW and is within the CAISO 1,400 MW generation tripping limit. Therefore, the PEF Addition can be accommodated with the addition of all transmission upgrades (estimated operating date of 2011) triggered by queued ahead generation projects and modifications to the existing PEF special protection system to add the PEF Addition for loss of two transmission lines.

SHORT-CIRCUIT DUTY RESULTS

Breakers at the following seven locations should be evaluated by SCE T/S Engineering to determine need for breaker replacement: Antelope 230 kV, Etiwanda 230 kV, Magunden 230 kV, Pardee 230 kV, Pastoria 230 kV, Sylmar 230 kV, and Vincent 230 kV.

FACILITY STUDY

The System Impact Study made nine recommendations in the Conclusion Section of the report to be pursued as part of the Facility Study. This technical report addresses the fifth recommendation made within the PEF Addition's System Impact Study and Section Three of PEF Addition's Facility Study Agreement, which was to perform technical assessments with additional upgrades modeled into the starting base case to mitigate pre-project problems. Based on the results of this technical study, the Facility Study work scope should be modified to include the following:

Upgrades Required by Prior-Queued Projects:

1. Develop cost estimates for transmission upgrades required to mitigate pre-project problems. The following transmission upgrades were identified to be required to eliminate overloads caused by earlier projects placed ahead of the PEF Addition in the application queue. In the event, however, that any of these earlier queued projects withdraw their application, PEF may need to assume responsibility for these Upgrades.

   This information is provided for informational purposes only and should be viewed as a non-binding estimate of what transmission upgrades may be potentially assigned to the PEF Addition.

   a. Antelope-Cottonwind Upgrades

      - New 230 kV switching station to be located approximately 20 miles northwest of the Antelope 230 kV substation adjacent to existing Antelope-Magunden No.2 230 kV transmission line
      - Tear-down approximately 20-mile portion of the existing Antelope-Magunden No.2 230 kV between Antelope and new substation and construct with new double-circuit 230 kV stringing both sides and connecting to new substation and Antelope.
      - Connect the remaining section of the existing Antelope-Magunden No.2 230 kV transmission line to the new substation.

   b. Antelope-Vincent-Rio Hondo-Mesa Upgrades

      - Tear-down both existing Antelope-Mesa 230 kV and Antelope-Vincent 230 kV transmission lines.

- Construct second new Antelope-Vincent 500 kV transmission (initially energized at 230 kV) on right-of-way vacated with tear-down (first new 500 kV energized at 230 kV is assigned to the Antelope Transmission Project).
- Construct a new section of 500 kV transmission line between Vincent and the Rio Hondo area on right-of-way vacated with tear-down of Antelope-Mesa 230 kV transmission line. This section of 500 kV transmission line will ultimately be used as part of a new Vincent-Mira Loma 500 kV transmission line. If for some reason the Vincent-Mira Loma 500 kV transmission line does not materialize, the upgrade of this transmission line section is needed to interconnect generation queued ahead of the PEF Addition.
- Construct new Mesa-Rio Hondo 230 kV transmission line on right-of-way vacated with tear-down. Vincent-Mira Loma 500 kV scope may require double-circuit 500 kV construction standard for a portion of this line section with one of the circuits used for Mesa-Rio Hondo 230 kV and the other circuit used for Vincent-Mira Loma 500 kV.

Additional Facilities Triggered by Interconnection of PEF Addition:

The following additional facilities are triggered by the interconnection of PEF Addition. This information is provided for informational purposes only and may be further refined in the Facilities Study.

2. Modify existing PEF Special Protection System to add proposed new unit to the tripping logic for N-2. Due to hardware limitation, the unit should be tripped for any N-2 outage that would result in tripping the existing 750 PEF generation units. These N-2 outages are summarized in Table 2-1 and Table 2-2. RAS Arming studies will be necessary, to be done as part of preliminary engineering and design, to properly account for changes in system performance resulting from transmission line upgrades.

3. Evaluate circuit breakers at the seven locations identified in Table 3 and develop costs for any breaker replacements as applicable. Evaluation of single-phase-to-ground short-circuit duty will be conducted once the Vincent-Mira Loma 500 kV transmission line design is better identified.

TABLE OF CONTENTS

I. INTRODUCTION 1

II. STUDY CONDITIONS AND ASSUMPTIONS 1

A. Planning Criteria 1
B. Generation and Load Assumptions 4
C. Transmission Projects 7
D. Pastoria Energy Facility Addition 9
E. Big Creek Remedial Action Scheme 10
F. PEF Special Protection System 11
G. Power Flow Study 12
H. Transient Stability Study 14
I. Short-Circuit Duty Study 14

III. POWER FLOW RESULTS 15

IV. SHORT CIRCUIT DUTY 16

V. CONCLUSION 17

FIGURES AND TABLES

TABLE 1-1 – Generation Assumptions 4
TABLE 1-2 – Heavy Summer Load Assumptions 5
TABLE 1-3 – Light Spring Load Assumptions 6
FIGURE 1 – Pastoria Energy Facility Addition One-Line Diagram 9
TABLE 1-4 – South of Magunden Transmission Line Ampacity Values 10
TABLE 1-5 – Power Flow Study Assumptions 14

TABLE 2-1 – Heavy Summer Power Flow Results
TABLE 2-2 – Light Spring Power Flow Results Stressing Antelope Leg
TABLE 3 – Short-Circuit Duty Results 16

APPENDIX – Power Flow Plots

PASTORIA ENERGY FACILITY, LCC
PASOTIRA ADDITION PROJECT
TECHNICAL ASSESSMENT

January 19, 2005

I. INTRODUCTION

Southern California Edison Company (SCE) performed and delivered a System Impact Study as requested by Pastoria Energy Facility, LCC (PEF) to identify the impacts associated with interconnection of a new gas fired generator with a net output of 157 MW (PEF Addition). The System Impact Study, titled "Pastoria Energy Facility, LCC - Pastoria Addition" dated May 13, 2005 was performed by adding the proposed project to the system arrangement which included the addition of the SCE Antelope Transmission Project and all generation projects ahead in queue. The SCE Antelope Transmission Project consists of a new Antelope-Pardee 500 kV, Antelope-Vincent 500 kV and new Antelope-Tehachapi 500 kV transmission line all energized at 230 kV. The results of the study identified the need for additional capacity to integrate queued generation projects ahead of the Pastoria Addition.

With the inclusion of the PEF Addition, the need for upgrades was found to be further exacerbated. In particular, the results of the study identified a base case overload problem on the existing Antelope-Mesa and Pastoria-Pardee-Warne 230 kV transmission lines as well as a new Cottonwind-Antelope 230 kV transmission line (formed by looping existing Antelope-Magunden No.2 230 kV into the new Cottonwind Substation). In addition, a number of single and double contingencies were identified to result in overloading numerous existing facilities therefore requiring either a new Special Protection System to be implemented or additional transmission upgrades.

The system impact study recommended that technical assessments be undertaken to include transmission upgrades needed to integrate generation projects queued ahead of the PEF Addition. The purpose of the Technical study was to determine the adequacy of SCE's transmission system to accommodate all or part of the PEF Addition after inclusion of transmission projects triggered by queued generation projects ahead and to identify need for any additional transmission upgrades. This study provides the study results of the technical assessments.

II. STUDY CONDITIONS AND ASSUMPTION

A. <u>Planning Criteria</u>

The system impact study was conducted by applying the Southern California Edison and California Independent System Operator (CAISO) Reliability Criteria. More specifically, the main criteria applicable to this study are as follows:

Power Flow Assessment

The following contingencies are considered for transmission lines and 500/230 kV transformer banks ("AA-Banks"):

- Single Contingencies (loss of one line **or** one AA-Bank)
- Double Contingencies (loss of two lines **or** one line and one AA-Bank)
- Outages of two AA-Banks is beyond the Planning Criteria

The following loading criteria are used:

Transmission Lines	Base Case	Limiting Component Normal Rating
	N-1	Limiting Component A-Rating
	N-2	Limiting Component B-Rating
500/230 kV Transformer Banks	Base Case	Normal Loading Limit
	Long-Term & Short-Term	As defined by SCE Operating Bulletin No.33

The following principles were used in determining whether congestion management, special protection systems, or facility upgrades are required to mitigate base case, single contingency, or double contingency overloads:

- Congestion management, as a means to mitigate base case overloads, can be used if it is determined to be manageable and the CAISO concurs with the implementation

- Facility upgrades will be required if it is determined that the use of congestion management is unmanageable as defined in the congestion management section

- Special protection systems (SPS), in lieu of facility upgrades, will be recommended if the system is simple and effective, does not jeopardize system integrity, does not exceed the current CAISO single and double contingency tripping limitations, does not adversely effect existing or proposed special protection systems in the area, and can be readily implemented
- Facility upgrades will be required if implementation of a special protection system is determined to be complex, ineffective, or the amount of tripping exceeds the current CAISO single and double contingency tripping limitations

- Facility upgrades will also be required if adverse impacts are identified on existing or currently proposed special protection systems

- Congestion management in preparation for the next contingency will be required, with CAISO concurrence, if no facility upgrades or special protection systems are implemented

Congestion Assessment

The following study method was implemented to assess the extent of possible congestion:

a). Under Base Case with all transmission facilities in service, the system was evaluated with all existing interconnected generation and all generation requests in the area that have a queue position ahead of this request (pre-project) and all transmission upgrades necessary to interconnect these queued ahead projects modeled in service

b). Under Base Case with all transmission facilities in service, the system was reevaluated with the inclusion of the Pastoria Addition (post-project)

If the normal loading limits of facilities including those new ones modeled to interconnect queued ahead generation projects are exceeded in (a), the overload is identified as a "pre-project" overload that was triggered by a project in queue ahead of the Pastoria Addition. If the normal loading limits of facilities are exceeded in (b) and were not exceeded in (a), the overload is identified as triggered with the inclusion of the Pastoria Addition. Overloads identified in (a) should only exist if the CAISO allowed for the use of congestion management as an acceptable means to mitigate identified "pre-project" overloads for queued ahead generation project. The Pastoria Addition and other market participants in the area may be subjected to congestion management, potential upgrade cost and/or participation in any proposed special protection system(s) if the inclusion of the Pastoria Addition aggravates or triggers overloads. Additionally, the Pastoria Addition may have to participate in mitigation of overloads triggered by subsequent projects in queue, subject to FERC protocols and policies.

In order for congestion management to be a feasible alternative to system facilities, all of the following factors need to be satisfied:

- Time requirements necessary for coordination and communication between the CAISO operators, scheduling operators and SCE operators

- Distinct Path/Corridor rating should be adequately defined so monitoring and detecting congestion and implementing congestion of the contributing generation resources can be performed when limits are exceeded

- Sufficient amount of market generation in either side of the congested path/corridor should be available to eliminate market power

- Manageable generation in the affected area is necessary so that operators can implement congestion management if required (i.e. the dispatch schedule is known and controllable).

The results of these studies should be able to identify:

- if capacity is available to accommodate the proposed Pastoria Addition and all projects ahead in queue without the need for congestion management, special protection systems, and/or facility upgrades
- if congestion exists in the area with the inclusion of the Pastoria Addition and all projects ahead in queue under single and double element outage conditions assuming no new special protection systems are in place
- if sufficient capacity is maintained to accommodate all Must-Run and Regulatory Must-Take generation resources with all facilities in service
- if sufficient capacity is maintained to accommodate the total output of any one generation resource which is not classified as Must-Run.

The range of base case congestion will be determined by reducing market generation projects in the various areas within the SCE Big Creek Corridor. For single and double element outage conditions, the same methodology will be used to determine how much generation tripping is required in order to determine if use of special protection systems is appropriate. Use of special protection systems will be deemed inappropriate if the total amount of generation reduction is found to exceed 1,150 MW under loss of one transmission element and 1,400 MW under loss of two transmission elements. These limits are established by the CAISO utilizing the current Spinning Reserve Criteria.

B. Generation and Load Assumptions

To simulate the SCE transmission system for analysis, the study used databases that were used to conduct the SCE Annual CAISO Controlled Facilities Expansion Program. The bulk power study considered scenarios that evaluated maximum Big Creek Corridor generation. The Big Creek Corridor consists of diverse generation resources as summarized below in Table 1.

TABLE 1-1
GENERATION ASSUMPTIONS

Generation	Generation Resource Type	Total MW
Big Creek Hydro	Hydro Generation	1,000
Non-Wind QF Resources	Qualified Facilities	641
Wind QF Resources	Wind Generation	310
CDWR Resources	Hydro Generation	75
Pastoria Energy Facility	Combined Cycle	750
Queued Ahead Project 1	Wind Generation	201
Queued Ahead Project 2	Wind Generation	300
Queued Ahead Project 3	Wind Generation	201
Queued Ahead Project 4	Wind Generation	300

TABLE 1-2
HEAVY SUMMER LOAD ASSUMPTIONS

SUBSTATION	2005	2006	2007	2008	2009	2010	2011	2012	2013	2014	2015
ALAMITOS	192	195	188	190	190	192	192	195	197	199	200
ANTELOPE	553	573	591	609	629	651	672	692	718	737	761
BAILEY	79	82	84	87	90	93	96	99	103	105	109
BARRE	693	700	722	728	794	799	809	815	828	841	860
BLYTHE	55	56	57	58	58	59	60	61	63	64	65
CAMINO	2	2	2	2	2	2	2	2	2	2	2
CENTER	487	502	512	521	523	528	533	537	540	548	556
CHEVMAIN	130	130	130	130	130	130	130	130	130	130	130
CHINO	692	715	731	757	773	929	953	979	998	1004	1047
CIMA	2	2	2	2	2	2	2	2	2	2	2
DEL AMO	500	507	524	533	479	482	495	506	521	531	535
DEVERS - MIRAGE	692	724	752	400	355	374	386	397	411	425	440
EAGLE MT.	4	4	4	4	4	4	4	4	4	4	4
EAGLE ROCK	198	200	211	213	215	219	221	223	218	221	224
ELLIS	631	637	646	654	661	667	672	683	688	699	707
EL NIDO	348	353	357	362	367	369	373	378	384	390	395
ETIWANDA	549	567	587	604	621	641	650	687	710	733	757
ETIWANDA "AMERON"	70	70	70	70	70	70	70	70	70	70	70
GOLETA	252	254	258	260	262	264	266	270	275	278	281
GOULD	116	119	116	118	121	122	125	128	131	134	136
HINSON	503	536	545	551	554	592	595	602	612	620	635
JOHANNA	422	430	440	446	454	462	470	480	538	549	566
JURUPA	0	0	0	294	299	304	310	316	324	332	339
KRAMER	217	219	224	227	229	232	235	238	244	249	253
LA CIENEGA	465	471	467	471	475	478	483	488	506	513	519
LA FRESA	705	709	714	716	716	695	700	705	715	722	724
LAGUNA BELL	640	649	659	667	670	675	682	690	705	716	725
LEWIS	546	558	570	586	601	607	613	625	635	644	651
LIGHTHIPE	549	558	571	580	583	589	590	598	605	615	623
MESA	602	606	630	641	645	646	652	661	673	682	692
MIRAGE	0	0	0	378	387	388	398	409	422	434	444
MIRA LOMA	671	705	743	780	807	696	717	737	777	815	833
MOORPARK	641	661	677	692	704	717	730	747	893	912	949
OAK VALLEY	0	0	0	0	162	171	181	194	203	214	226
OLINDA	363	366	375	391	397	408	410	414	430	438	448
PADUA	655	663	676	684	687	692	706	714	726	743	754
RECTOR	688	720	751	773	792	809	826	858	884	904	932
RIO HONDO	740	753	756	766	777	785	791	803	817	832	843
SAN BERNARDINO	580	600	625	634	644	657	671	684	709	723	741
SANTA CLARA	552	568	586	602	614	626	639	654	672	688	706
SANTIAGO	665	684	704	724	741	765	787	812	836	853	877
SAUGUS	682	703	725	751	773	798	824	847	741	768	779
SPRINGVILLE	225	229	237	242	246	252	258	251	258	264	269
VALLEY	1353	1443	1526	1599	1671	1735	1803	1876	1964	2042	2139
VESTAL	183	187	193	196	196	198	199	203	206	210	213
VICTOR	487	501	517	532	540	553	557	573	589	605	620
VIEJO	327	337	348	364	375	384	392	400	412	424	437
VILLA PARK	750	765	761	760	765	763	773	783	749	763	765
VISTA 66 KV	810	828	848	565	566	577	588	599	613	629	612
VISTA 115 KV	442	451	453	475	393	397	398	405	407	416	420
WALNUT	691	697	710	720	726	728	732	739	749	761	770
Total	**22,402**	**22,989**	**23,573**	**24,107**	**24,533**	**24,977**	**25,422**	**25,964**	**26,604**	**27,195**	**27,787**

TABLE 1-3
LIGHT SPRING LOAD ASSUMPTIONS

SUBSTATION	2005	2006	2007	2008	2009	2010	2011	2012	2013	2014	2015
ALAMITOS	125	127	122	123	124	125	125	127	128	129	130
ANTELOPE	360	373	384	396	409	423	437	450	466	479	495
BAILEY	51	53	55	57	58	60	62	64	67	68	71
BARRE	451	455	469	473	516	519	526	530	538	547	559
BLYTHE	36	36	37	37	38	39	39	40	41	42	42
CAMINO	1	1	1	1	1	1	1	1	1	1	1
CENTER	317	327	333	339	340	343	346	349	351	356	361
CHEVMAIN	85	85	85	85	85	85	85	85	85	85	85
CHINO	450	465	475	492	502	604	620	636	649	653	681
CIMA	1	1	1	1	1	1	1	1	1	1	1
DEL AMO	325	330	341	347	311	313	322	329	338	345	348
DEVERS - MIRAGE	450	471	489	260	231	243	251	258	267	276	286
EAGLE MT.	3	3	3	3	3	3	3	3	3	3	3
EAGLE ROCK	129	130	137	138	140	143	144	145	142	144	146
ELLIS	410	414	420	425	430	433	437	444	447	454	460
EL NIDO	226	229	232	235	238	240	242	245	250	253	257
ETIWANDA	357	369	381	392	404	417	423	447	461	476	492
ETIWANDA "AMERON"	70	70	70	70	70	70	70	70	70	70	70
GOLETA	164	165	167	169	170	171	173	175	179	181	183
GOULD	76	77	76	77	79	80	81	83	85	87	89
HINSON	327	348	354	358	360	385	387	391	398	403	413
JOHANNA	274	279	286	290	295	300	305	312	350	357	368
JURUPA	0	0	0	191	195	198	201	206	211	216	220
KRAMER	141	143	145	147	149	151	153	155	158	162	164
LA CIENEGA	303	306	304	306	309	311	314	317	329	333	337
LA FRESA	458	461	464	465	466	452	455	458	464	469	471
LAGUNA BELL	416	422	429	434	435	439	443	448	458	465	472
LEWIS	355	363	370	381	391	395	398	406	413	419	423
LIGHTHIPE	357	363	371	377	379	383	384	389	393	400	405
MESA	391	394	410	416	419	420	424	430	437	443	450
MIRAGE	0	0	0	246	252	252	258	266	274	282	289
MIRA LOMA	436	458	483	507	524	453	466	479	505	530	542
MOORPARK	417	430	440	450	457	466	475	486	580	593	617
OAK VALLEY	0	0	0	0	105	111	117	126	132	139	147
OLINDA	236	238	244	254	258	265	267	269	279	285	291
PADUA	426	431	440	445	446	450	459	464	472	483	490
RECTOR	447	468	488	502	515	526	537	558	574	588	606
RIO HONDO	481	489	491	498	505	510	514	522	531	541	548
SAN BERNARDINO	377	390	407	412	419	427	436	445	461	470	482
SANTA CLARA	359	369	381	391	399	407	416	425	437	447	459
SANTIAGO	432	445	458	471	482	497	512	527	543	554	570
SAUGUS	443	457	471	488	502	519	536	551	482	499	506
SPRINGVILLE	146	149	154	157	160	164	167	163	168	172	175
VALLEY	880	938	992	1040	1086	1128	1172	1219	1276	1327	1390
VESTAL	119	121	125	127	128	128	130	132	134	136	139
VICTOR	317	326	336	346	351	359	362	373	383	393	403
VIEJO	213	219	226	237	243	250	255	260	268	276	284
VILLA PARK	487	497	494	494	497	496	502	509	487	496	497
VISTA 66 KV	527	538	551	367	368	375	382	389	398	409	398
VISTA 115 KV	287	293	295	309	256	258	258	263	265	270	273
WALNUT	449	453	461	468	472	473	476	481	487	495	500
Total	**14,586**	**14,967**	**15,347**	**15,694**	**15,971**	**16,259**	**16,549**	**16,901**	**17,317**	**17,701**	**18,086**

These conditions were examined to identify loading scenarios that would stress the Big Creek Corridor. In addition, the study considered two load conditions: 2006 heavy summer and 2007 light spring. Heavy summer and light spring load assumptions are provided above in Tables 1-2 and 1-3 respectively.

C. Transmission Projects

Generation interconnection requests in the Antelope Valley and Tehachapi Area ahead of the PEF Addition have triggered the need for additional transmission projects or upgrades in the Big Creek Corridor. These upgrades include the new transmission facilities from the SCE Antelope Substation to the SCE Pardee and SCE Vincent substations as outlined below. An application for a Certificate of Public Convenience and Necessity (CPCN) has been filed for these upgrades by SCE with the California Public Utilities Commission (CPUC).

Pastoria-Pardee Reconductor Project (OD April 2006)

The Pastoria-Pardee Reconductor Project was included into the starting power flow cases of the System Impact Study. This project was identified as an infrastructure replacement project and consists of reconductoring two of the three lines south of Pastoria (Pastoria-Bailey, Bailey-Pardee and Pastoria-Pardee 230 kV 605 ACSR conductored transmission lines) with a new 666.6 ACSS/TW conductor. The new conductor will increase the thermal conductor rating of these two lines from 885 amps up to 1500 amps. The third transmission line south of Pastoria (Pastoria-Pardee-Warne 230 kV) is not part of this project and therefore will be limited to a maximum conductor rating of 1240 amps normal based on conductor type and 1342 amps emergency based on line clearance limitations. This project is currently under construction with the Pastoria-Bailey 230 kV line already upgraded. Upgrades to the remaining lines are currently underway with an estimated completion date of April 2006.

Antelope Transmission Project (OD December 2008)

The Antelope Transmission Project consists of the following transmission facilities for which a CPCN application was filed. These facilities were modeled into the starting power flow cases of the System Impact Study:

- Segment 1 of the Antelope Transmission Project - a new 500 kV transmission line (bundled 2156 ACSR) initially energized at 230 kV from the Antelope substation to Pardee substation (approved by the CAISO for the 201 MW queued generation project)

- Segment 2 of the Antelope Transmission Project - a new 500 kV transmission line (bundled 2156 ACSR) initially energized at 230 kV from the Antelope substation

to Vincent substation (triggered by the 300 MW subsequent queued generation project but not yet approved by the CAISO)

- Segment 3 of the Antelope Transmission Project (triggered by the 201 MW subsequent queued generation project but not yet approved by the CAISO):

    - a new radial 500 kV transmission line (bundled 2156 ACSR) initially energized at 230 kV from the Antelope substation to the potential location of a conceptual substation hub referred to as Tehachapi Substation #1 near Cal Cement

    - a new 230 kV transmission line (bundled 1590 ACSR) from the location of the Tehachapi Substation #1 to the location of a second conceptual substation referred to as Tehachapi Substation #2 near Monolith

    - a new substation near Monolith with two line positions referred to as Tehachapi Substation #2.

<u>Antelope-Cottonwind Upgrades (Estimated OD 2011)</u>

Upgrades between Antelope and a new substation (Tehachapi Substation No.5 also known as Cottonwind) will be required in order to accommodate a 300 MW generation project (the same one triggering the need for new Antelope-Vincent 500 kV transmission line, initially energized at 230 kV), queued ahead of PEF Addition. These upgrades were not included into the original System Impact Study. Studies sufficient to support Proponents Environment Assessment (PEA) needed for filing of a CPCN Application have not been conducted and approval from the CAISO for these upgrades has not been received. These upgrades were added to the starting base cases for the Technical Assessment and are summarized as follows:

- New 230 kV switching station to be located approximately 20 miles northwest of the Antelope 230 kV substation adjacent to existing Antelope-Magunden No.2 230 kV transmission line
- Tear-down approximately 20-mile portion of the existing Antelope-Magunden No.2 230 kV between Antelope and new substation and construct with new double-circuit 230 kV stringing both sides and connecting to new substation.
- Connect the remaining section of the existing Antelope-Magunden No.2 230 kV transmission line to the new substation.

<u>Antelope-Vincent-Rio Hondo-Mesa Upgrades (Estimated OD 2011)</u>

The need for additional transmission upgrades between Antelope and Mesa (located in the Main Los Angeles Basin Area) have been identified in System Impact Studies performed for an additional 300 MW generation project ahead in queue of the PEF Addition. These upgrades were not included into the original System Impact Study. Studies sufficient to support Proponents Environment Assessment (PEA) needed for

filing of a CPCN Application have not been conducted and approval from the CAISO for these upgrades has not been received. These upgrades were added to the starting base cases for the Technical Assessment and are summarized as follows:

- Tear-down both existing Antelope-Mesa 230 kV and Antelope-Vincent 230 kV transmission lines.
- Construct second new Antelope-Vincent 500 kV transmission (initially energized at 230 kV) on right-of-way vacated with tear-down
- Construct a new section of 500 kV transmission line between Vincent and the Rio Hondo area on right-of-way vacated with tear-down which will be used as part of a new Vincent-Mira Loma 500 kV transmission line
- Construct new Mesa-Rio Hondo 230 kV transmission line on right-of-way vacated with tear-down

D. Pastoria Energy Facility Addition

The Pastoria Energy Facility is geographically located east of Interstate 5 north of Lebec, California. The Project Addition is to be connected to the recently constructed Lebec 230 kV Substation. Figure 1 below provides the single line diagram showing the proposed PEF Addition.

The inclusion of the PEF Addition is anticipated to impact flows on the Big Creek Corridor transmission lines south of Magunden. There are currently eleven 230 kV transmission lines south of Magunden that will increase to twelve with the addition of another project in queue ahead of the PEF Addition. Existing amp ratings for these transmission lines are provided below in Table 1-4.

FIGURE 1
PASTORIA ENERGY FACILITY ADDITION

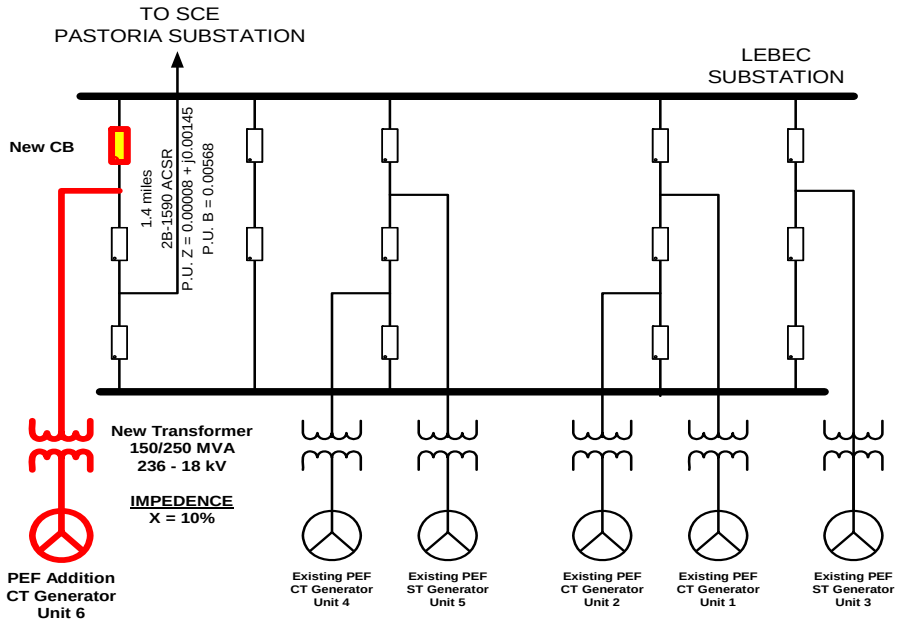

TABLE 1-4
SOUTH OF MAGUNDEN TRANSMISSION LINE AMPACITY VALUES

Transmission Line	Normal	Long-Term Emergency	Short-Term Emergency
Antelope-Mesa 230 kV	Replaced (Antelope-Vincent-Rio Hondo-Mesa Upgrades)		
Antelope-Vincent 230 kV	Replaced (Antelope-Vincent-Rio Hondo-Mesa Upgrades)		
Antelope-Cottonwind 230 kV	Replaced (Antelope-Cottonwind Upgrades)		
Antelope Magunden No.1 230 kV	895	945	945
Cottonwind-Magunden 230 kV	1240	1342	1342
Magunden-Pastoria No.1 230 kV	825	936	936
Magunden-Pastoria No.2 230 kV	825	936	936
Magunden-Pastoria No.3 230 kV	1150	1320	1342
Bailey-Pardee 230 kV	1500	1500	1500
Pardee-Pastoria 230 kV	1500	1500	1500
Pardee-Pastoria-Warne 230 kV	1240	1342	1342
Pardee-*Pastoria*-Warne 230 kV	1240	1342	1342
Bailey-Pastoria 230 kV	1500	1500	1500
New Antelope-Pardee (Segment 1 of Antelope Transmission Project)	3950	4540	5330
New Antelope-Vincent (Segment 2 of Antelope Transmission Project)	3950	4540	5330
New Antelope-Tehachapi 500 kV (Segment 3 of Antelope Transmission Project)	3950	4540	5330
2nd Antelope-Vincent 500 kV (Part of Antelope-Vincent-Rio Hondo-Mesa)	3950	4540	5330
New Vincent-Mira Loma 500 kV	3950	4540	5330
New Rio Hondo-Mesa 230 kV (Antelope-Vincent-Rio Hondo-Mesa)	3230	3710	4360

E. Big Creek Remedial Action Scheme

The Big Creek system has several existing remedial action schemes (RAS) for single and double element outage conditions. The relevant elements of the existing Big Creek RAS that may be impacted by the proposed PEF Addition are as follows:

1. An overload of the following lines will initiate an automatic runback of the generation units at Mammoth Pool and/or Eastwood. Eastwood will not runback if in pump mode.

   - Magunden-Pastoria No.1 230-kV
   - Magunden-Pastoria No.2 230-kV
   - Magunden-Pastoria No.3 230-kV

2. An SEL-68 stability relay located at Magunden will run-back the generation units at Mammoth Pool and/or Eastwood for growing oscillations and trip for unstable power swings. Eastwood will not be tripped if in pump mode.

3. At any time that the Big Creek and San Joaquin Valley RAS is inoperative or if the SEL-68 stability trip relay at Magunden is unavailable, the following limitation will apply:

   - Big Creek Project (Big Creek 1, 2, 3, 4, 8, Mammoth Pool, Portal PH, and Eastwood) net generation output is limited as defined by System Operating Bulleting No.204.
   - The power flow south of the SCE Magunden substation is limited to 1180 MW with all five lines in service.

F. PEF Special Protection System

The initial Pastoria Energy Facility 750 MW project was interconnected with minimal transmission upgrades but required implementation of a Special Protection System (PEF SPS) for loss of one or two transmission facilities. This SPS has is already in service and has operated several times as designed. The following outlines the existing outages that can result in the potential operation of the new PEF SPS:

Single Outages

1. Loss of Antelope-Magunden No.1 230 kV
2. Loss of Antelope-Magunden No.2 230 kV
3. Loss of Pastoria-Edmonston 230 kV
4. Loss of Pastoria-Pardee 230 kV
5. Loss of Pastoria-Pardee-Warne 230 kV
6. Loss of Pardee-Bailey 230 kV
7. Loss of Pastoria-Bailey 230 kV

Double Outages

1. Loss of Antelope-Magunden No.1 and No.2 230 kV lines
2. Loss of Antelope-Vincent and Antelope-Mesa 230 kV lines
3. Loss of Pastoria-Pardee-Warne and Pastoria-Pardee 230 kV lines
4. Loss of Pastoria-Pardee-Warne and Pastoria-Bailey 230 kV lines
5. Loss of Pastoria-Pardee-Warne and Pardee-Bailey 230 kV lines
6. Loss of Pastoria-Pardee and Pastoria-Bailey 230 kV lines
7. Loss of Pastoria-Pardee and Pardee-Bailey 230 kV lines

Maintenance Outages

Under maintenance conditions, the proposed PEF SPS will arm the entire Pastoria Energy Facility (750 MW) to trip for the next outage condition.

The PEF SPS design is by far the most complicated Special Protection System in service to protect the SCE network. The system has a total of 28 arming points, which is the current maximum number of arming points that SCE will consider in implementing an SPS. Twenty-seven of the twenty-eight arming points are utilized to trip individual units at the Pastoria Energy Facility (five units) under the outages outlined above. The design of the system groups the seven single outages into five arming categories in order to limit the number of arming points required for single outages to twenty-five (5 arming buckets x 5 units = 25) in a fashion that provides the most flexibility. For loss of two transmission lines, the entire PEF project is tripped thereby requiring only one arming point. An additional arming point is utilized to handle maintenance outages and overlapping outages.

Upon completion of the Pastoria-Pardee Reconductor Project, the PEF SPS will be redesigned (arming algorithm only) as to minimize the number of outages that require generation tripping. Studies are currently ongoing to determine appropriate arming algorithm. At the time of this study, it is unclear exactly which single contingencies are eliminated and how the arming algorithm will operate.

Generation projects in queue ahead of the PEF addition were identified to potentially require implementation of special protection systems. Since the PEF SPS cannot be expanded beyond the current design, complete redesigned of the RAS may be necessary. Such redesign may involve tripping the proposed PEF Addition for each of the outages previously identified. New facility upgrades will be required if it is determined that use of SPS cannot be implemented for the PEF Addition or if the CAISO does not approve continued reliance of the SPS. Results of this Technical Study will be used to determine if a redesigned of the PEF RAS may be used to accommodate the additional generation unit.

G. Power Flow Study

The technical assessment study evaluated a total of six different power flow study scenarios. Transmission projects were included in order to identify if the need for additional delivery upgrades are necessary. Further description of the additional case assumptions follows:

1. Big Creek Corridor under 2006 heavy summer with all currently planned transmission upgrades, generation projects in queue ahead of the PEF Addition, and transmission upgrades necessary to interconnect these queued generation projects, Case 1.

   Upgraded Big Creek Corridor to include all transmission projects discussed in Section II.C and a 2006 heavy summer load forecast with high internal generation in the SCE northern area electrical system. Generation included: Year 2004 reliability must-run, regulatory must-take, all existing generation in the basin area, and all other proposed generation projects in queue ahead of the proposed Pastoria Addition. Generation patterns were maximized in the SCE northern area in order

to identify extent of potential congestion after the in-service of the proposed project

2. Big Creek Corridor under 2006 heavy summer with all currently planned transmission upgrades, generation projects in queue ahead of the PEF Addition, transmission upgrades necessary to interconnect these queued generation projects and the inclusion of the PEF Addition, Case 2.

   Case 1 was modified to include the PEF Addition.

3. Big Creek Corridor under 2007 light spring with all currently planned transmission upgrades, generation projects in queue ahead of the PEF Addition, and transmission upgrades necessary to interconnect these queued generation projects while stressing the Pardee leg of the Big Creek corridor, Case 3

   Upgraded Big Creek Corridor to include all transmission projects discussed in Section II.C and a 2007 light spring load forecast with high internal generation in the SCE northern area electrical system. Generation included: Year 2004 reliability must-run, regulatory must-take, all existing generation in the basin area, and all other proposed generation projects in queue ahead of the proposed PEF Addition. Generation patterns were maximized in the SCE northern area, except for Ventura Area generation which was assumed off-line, in order to identify the extent of potential congestion after the in-service of the proposed project when stressing the Pardee leg of the Big Creek corridor.

4. Big Creek Corridor under 2007 light spring with all currently planned transmission upgrades, generation projects in queue ahead of the PEF Addition, transmission upgrades necessary to interconnect these queued generation projects and the inclusion of the PEF Addition, Case 4

   Case 3 was modified to include the PEF Addition.

TABLE 1-5
POWER FLOW STUDY ASSUMPTIONS (MW)

	Heavy Summer		Light Spring Stress Pardee	
Area Assumptions	**Case 1 Pre**	**Case 2 Post**	**Case 3 Pre**	**Case 4 Post**
Generation	15,350	15,368	9,797	9,817
Import	8,551	8,551	5,866	5,867
Load	23,274	23,274	15,100	15,100
System Losses	627	646	563	584
Major Flows				
Path 26	3,708	3,708	3,415	3,413
East-of-River	4,863	4,864	2,707	2,708
West-of-River	5,013	5,013	2,197	2,198
South of Magunden	499	499	930	930
North of Lugo	566	566	503	503
South of Lugo	4,901	4,952	4,519	4,569
Vincent-Lugo	1,414	1,435	1,911	1,930
South of Pardee & Vincent	4,421	4,546	4,914	5,050
SCIT	13,749	13,750	10,579	10,578

H. Transient Stability Study

In order to properly ascertain impact of project addition on system transient stability performance, revisions to the PEF SPS resulting from the Pastoria-Pardee Reconductor Project need to be well defined. Such definition is critical in that generation tripping in the Big Creek corridor serves to stabilize any known transient stability problem. Additionally, the effects of new transmission facilities required for interconnecting generation projects queued ahead of the PEF Addition will only diminish the need to trip generation due to transient stability problem. As a result, SCE recommends that the results identified in the original System Impact Study be utilized until these two issues are better defined. SCE anticipates completion of the SPS redesign identification no later than April of 2006. Upon completion of the PEF SPS redesign, SCE will determine if additional sensitivity studies are necessary to determine impact of PEF Addition on transient system performance.

I. Short -Circuit Duty

To determine the impact on short-circuit duty after inclusion of all currently planned transmission upgrades, generation projects in queue ahead of the PEF Addition, and transmission upgrades necessary to interconnect these queued generation projects, the study calculated the maximum symmetrical three-phase-to-ground short-circuit duties at the most critical locations. Bus locations where short-circuit duty is increased with

the PEF Addition by at least 0.1 KA and the duty is in excess of 60% of the minimum breaker nameplate rating are flagged for further review. Generator and transformer data as provided by the customer was used according to the generator and transformer data sheets.

III. POWER FLOW RESULTS

With the additional transmission line upgrades necessary to support generation projects in queue ahead of the PEF Addition modeled in this Technical Assessment, all three base case overload problems identified in the System Impact Study report were mitigated. In addition, a number of single and double contingency overloads were also mitigated. The following presents the power flow study results. Power flow plots are provided in Appendix A (Heavy Summer), Appendix B (Light Spring). Details of heavy summer results are provided in Table 2-1 while Light Spring results are provided in Table 2-2.

SINGLE OUTAGE CONTINGENCY (N-1)

Under light spring conditions, four single contingencies were still identified to result in line loadings that are in excess of the maximum allowable limit on the Pastoria-Pardee-Warne 230 kV and Antelope-Magunden No.1 230 kV transmission lines. As discussed in the assumptions section, the Pastoria-Pardee-Warne 230 kV transmission line is not being reconductored as part of the Pastoria-Pardee Reconductor Project. Consequently, overload of this line under outage conditions will require a special protection system to trip generation. The worst single contingency outage impacting the Pastoria-Pardee-Warne 230 kV transmission line was found to be loss of the Bailey-Pastoria 230 kV. The only outage identified to impact the Antelope-Magunden No.1 was found to be loss of the Magunden-Cottonwind (a.k.a. Tehachapi Substation No.5) 230 kV transmission line (section of existing Antelope-Magunden No.2 230 kV transmission line). With the transmission project additions included into the starting base case, loading on the Pastoria-Pardee-Warne 230 kV transmission line was identified to be at 128% of normal rating which translates to 18% over the emergency limit. Loading on the Magunden-Cottonwind 230 kV transmission line was identified to be at 113% of normal rating which translates to 13% over the emergency limit.

DOUBLE OUTAGE CONTINGENCY (N-2)

The studies identified a total of nine “likely” double contingencies impacting six different 230 kV transmission lines. With the transmission project additions included into the starting base case, loadings on impacted transmission lines south of Pastoria to Pardee were reduced while loadings on impacted transmission lines south of Magunden towards Antelope were increased.

The use of a special protection system to trip the PEF Addition will be required due to SPS design limitations. Evaluation of the worst double contingency outages affecting transmission lines south of Magunden was conducted to determine the maximum amount

of generation tripping required. The worst double contingency impacting the Pardee leg of the Big Creek Corridor was found to be loss of both the Pardee-Bailey 230 kV and Pastoria-Pardee 230 kV transmission lines. The worst double contingency impacting the Antelope leg of the Big Creek Corridor was found to be loss of both the Antelope-Magunden No.1 and Magunden-Cottonwind 230 kV transmission lines. Under both of these outage condition, the maximum amount of generation tripping required for mitigating both stability (tripping Big Creek) and thermal overload (tripping PEF) was 1,301 MW and is within the CAISO 1,400 MW generation tripping limit.

IV. SHORT CIRUIT DUTY STUDY RESULTS

The results of the maximum symmetrical three-phase-to-ground short circuit duty at the critical buses in the SCE bulk transmission system are summarized below in Table 3. The study results indicate that the PEF Addition increases short-circuit duties by an amount equal or greater than 0.1kA at seven locations were duty is in excess of 60% of the minimum breaker nameplate rating. The following summarizes the impact of the PEF addition:

- At Pastoria 230kV substation bus, the short-circuit duty is increased by 1.8kA from 31.4 to 33.2kA

- Breakers at the seven locations listed below in Table 3 should be evaluated by SCE T/S Engineering to determine need for breaker replacement.

Table 3
Three-Phase-to-Ground Short-Circuit Duty Results

Substation	Bus KV	Pre-Project		Post-Project		DELTA KA
		X/R	KA	X/R	KA	
Antelope	230	16.1	28.1	16.0	28.2	0.1
Etiwanda	230	25.7	56.9	25.7	57.0	0.1
Magunden	230	10.2	21.4	10.2	21.7	0.3
Pardee	230	17.5	54.4	17.4	54.7	0.3
Pastoria	230	14.1	31.4	14.9	33.2	1.8
Sylmar S.	230	19.5	57.7	19.4	57.8	0.1
Vincent	230	20.2	56.3	20.2	56.4	0.1

Single-Phase-to-Ground short-circuit duty is dependant on tower design configuration which has not been determined for the Vincent-Mira Loma 500 kV transmission line. As a result, SCE did not process single-phase-to-ground short-circuit duty analysis. Upon completion of tower design for the Vincent-Mira Loma, SCE will review the single-phase-to-ground short-circuit duty results.

V. CONCLUSION

LOAD FLOW RESULTS

With the additional transmission line upgrades necessary to support generation projects in queue ahead of the PEF Addition modeled in this Technical Assessment, all base case overload problems previously identified in the System Impact Study report were mitigated. In addition, all single contingency overload problems previously identified under heavy summer load conditions were mitigated. Under light spring load conditions, all but four single contingencies were mitigated. To mitigate the four remaining single contingencies impacting two transmission lines, a new special protection system or modification to the existing PEF special protection system will be required. A total of nine likely double contingencies impacting six different 230 kV transmission lines were identified. The maximum amount of generation tripping required to mitigate both stability (tripping Big Creek) and thermal overload (tripping PEF) under loss of two transmission lines was found to be 1,301 MW and is within the CAISO 1,400 MW generation tripping limit. Therefore, the PEF Addition can be accommodated with the addition of all transmission upgrades (estimated operating date of 2011) triggered by queued ahead generation projects and modifications to the existing PEF special protection system to add the PEF Addition for loss of two transmission lines.

SHORT-CIRCUIT DUTY RESULTS

Breakers at the following seven locations should be evaluated by SCE T/S Engineering to determine need for breaker replacement: Antelope 230 kV, Etiwanda 230 kV, Magunden 230 kV, Pardee 230 kV, Pastoria 230 kV, Sylmar 230 kV, and Vincent 230 kV.

FACILITY STUDY

The System Impact Study made nine recommendations in the Conclusion Section of the report to be pursued as part of the Facility Study. This technical report addresses the fifth recommendation made within the PEF Addition's System Impact Study and Section Three of PEF Addition's Facility Study Agreement, which was to perform technical assessments with additional upgrades modeled into the starting base case to mitigate pre-project problems. Based on the results of this technical study, the Facility Study work scope should be modified to include the following:

Upgrades Required by Prior-Queued Projects:

1. Develop cost estimates for transmission upgrades required to mitigate pre-project problems. The following transmission upgrades were identified to be required to eliminate overloads caused by earlier projects placed ahead of the PEF Addition in the application queue. In the event, however, that any of these earlier queued projects withdraw their application, PEF may need to assume responsibility for these Upgrades.

This information is provided for informational purposes only and should be viewed as a non-binding estimate of what transmission upgrades may be potentially assigned to the PEF Addition.

a. Antelope-Cottonwind Upgrades

- New 230 kV switching station to be located approximately 20 miles northwest of the Antelope 230 kV substation adjacent to existing Antelope-Magunden No.2 230 kV transmission line
- Tear-down approximately 20-mile portion of the existing Antelope-Magunden No.2 230 kV between Antelope and new substation and construct with new double-circuit 230 kV stringing both sides and connecting to new substation and Antelope.
- Connect the remaining section of the existing Antelope-Magunden No.2 230 kV transmission line to the new substation.

b. Antelope-Vincent-Rio Hondo-Mesa Upgrades

- Tear-down both existing Antelope-Mesa 230 kV and Antelope-Vincent 230 kV transmission lines.
- Construct second new Antelope-Vincent 500 kV transmission (initially energized at 230 kV) on right-of-way vacated with tear-down (first new 500 kV energized at 230 kV is assigned to the Antelope Transmission Project).
- Construct a new section of 500 kV transmission line between Vincent and the Rio Hondo area on right-of-way vacated with tear-down of Antelope-Mesa 230 kV transmission line. This section of 500 kV transmission line will ultimately be used as part of a new Vincent-Mira Loma 500 kV transmission line. If for some reason the Vincent-Mira Loma 500 kV transmission line does not materialize, the upgrade of this transmission line section is needed to interconnect generation queued ahead of the PEF Addition.
- Construct new Mesa-Rio Hondo 230 kV transmission line on right-of-way vacated with tear-down. Vincent-Mira Loma 500 kV scope may require double-circuit 500 kV construction standard for a portion of this line section with one of the circuits used for Mesa-Rio Hondo 230 kV and the other circuit used for Vincent-Mira Loma 500 kV.

<u>Additional Facilities Triggered by Interconnection of PEF Addition:</u>

The following additional facilities are triggered by the interconnection of PEF Addition. This information is provided for informational purposes only and may be further refined in the Facilities Study.

2. Modify existing PEF Special Protection System to add proposed new unit to the tripping logic for N-2. Due to hardware limitation, the unit should be tripped for any N-2 outage that would result in tripping the existing 750 PEF generation units. These

N-2 outages are summarized in Table 2-1 and Table 2-2. RAS Arming studies will be necessary, to be done as part of preliminary engineering and design, to properly account for changes in system performance resulting from transmission line upgrades.

3. Evaluate circuit breakers at the seven locations identified in Table 3 and develop costs for any breaker replacements as applicable. Evaluation of single-phase-to-ground short-circuit duty will be conducted once the Vincent-Mira Loma 500 kV transmission line design is better identified.

POWER FLOW TABLES

Table 2-1
Revised Heavy Summer Study Results

Outage Case	Outage Type	Transmission Outage	Overloaded Transmission Facilities	Rating		Pre-Upgrades			Post-Upgrades		
				Normal	Emerg	Amps	Normal	Emerg	Amps	Normal	Emerg
41	Double	Pardee-Pastoria 230 kV Pardee-Pastoria-Warne 230 kV	Bailey-Pastoria 230 kV	1500	1500	1892	126.1%	126.1%	1917	127.8%	127.8%
			Pardee-Bailey 230 kV	1500	1500	1709	113.9%	113.9%	1735	115.7%	115.7%
42	Double	Bailey-Pastoria 230 kV Pardee-Pastoria-Warne 230 kV	Pardee-Pastoria 230 kV	1500	1500	1820	121.3%	121.3%	1775	118.4%	118.4%
43	Double	Pardee-Bailey 230 kV Pardee-Pastoria-Warne 230 kV	Pardee-Pastoria 230 kV	1500	1500	1704	113.6%	113.6%	1669	111.2%	111.2%
44	Double	Bailey-Pastoria 230 kV Pardee-Pastoria 230 kV	Pardee-Pastoria-Warne 230 kV	1500	1500	2002	133.5%	133.5%	1955	130.3%	130.3%
45	Double	Pardee-Bailey 230 kV Pardee-Pastoria 230 kV	Pardee-Pastoria-Warne 230 kV	1240	1342	1880	151.6%	140.1%	1843	148.6%	137.3%

Table 2-2
Revised Light Spring Study Results

Outage Case	Outage Type	Transmission Outage	Overloaded Transmission Facilities	Rating Normal	Rating Emerg	Pre-Upgrades Amps	Pre-Upgrades Normal	Pre-Upgrades Emerg	Post-Upgrades Amps	Post-Upgrades Normal	Post-Upgrades Emerg
6	Single	Pardee-Pastoria 230 kV	**Pardee**-Pastoria-Warne 230 kV	1240	1342	1596	128.7%	118.9%	1564	126.2%	116.6%
7	Single	Bailey-Pastoria 230 kV	**Pardee**-Pastoria-Warne 230 kV	1240	1342	1618	130.5%	120.6%	1584	127.7%	118.0%
8	Single	Pardee-Bailey 230 kV	**Pardee**-Pastoria-Warne 230 kV	1240	1342		0.0%	0.0%	1569	126.5%	116.9%
13	Single	Magunden-Tehachapi5 230 kV	**Pardee**-Pastoria-Warne 230 kV	1240	1342	1364	110.0%	101.7%	1369	110.4%	102.0%
			Antelope-Magunden No.1 230 kV	885	936	1018	115.0%	108.7%	999	112.8%	106.7%
41	Double	Pardee-Pastoria 230 kV Pardee-Pastoria-Warne 230 kV	Bailey-Pastoria 230 kV	1500	1500	2376	158.4%	158.4%	2302	153.5%	153.5%
			Pardee-Bailey 230 kV	1500	1500	2213	147.6%	147.6%	2152	143.5%	143.5%
			Magunden-Tehachapi5 230 kV	1240	1342	1250	100.8%	93.1%	1390	112.1%	103.6%
42	Double	Bailey-Pastoria 230 kV Pardee-Pastoria-Warne 230 kV	Pardee-Pastoria 230 kV	1500	1500	2300	153.4%	153.4%	2232	148.8%	148.8%
			Magunden-Tehachapi5 230 kV	1240	1342	1287	103.8%	95.9%	1430	115.3%	106.5%
			Magunden-Antelope 230 kV	895	944	1261	140.9%	133.6%	1178	131.6%	124.7%
43	Double	Pardee-Bailey 230 kV Pardee-Pastoria-Warne 230 kV	Pardee-Pastoria 230 kV	1500	1500	2193	146.2%	146.2%	2132	142.1%	142.1%
			Magunden-Tehachapi5 230 kV	1240	1342	1214	97.9%	90.5%	1354	109.2%	100.9%
			Magunden-Antelope 230 kV	895	944	1199	134.0%	127.0%	1120	125.1%	118.6%
44	Double	Bailey-Pastoria 230 kV Pardee-Pastoria 230 kV	Pardee-Pastoria-Warne 230 kV	1500	1500	2503	166.8%	166.8%	2428	161.9%	161.9%
			Magunden-Tehachapi5 230 kV	1240	1342	1308	105.5%	97.4%	1449	116.8%	108.0%
			Magunden-Antelope 230 kV	895	944	1279	142.9%	135.4%	1192	133.2%	126.3%
45	Double	Pardee-Bailey 230 kV Pardee-Pastoria 230 kV	Pardee-Pastoria-Warne 230 kV	1240	1342	2385	192.4%	177.7%	2322	187.3%	173.0%
			Magunden-Tehachapi5 230 kV	1240	1342	1231	99.3%	91.7%	1372	110.6%	102.2%
			Magunden-Antelope 230 kV	895	944	1214	135.6%	128.6%	1133	126.6%	120.1%
46	Double	Magunden-Tehachapi5 230 kV Magunden-Antelope 230 kV	Pardee-Pastoria-Warne 230 kV	1240	1342	1705	137.5%	127.0%	1706	137.6%	127.1%
			Magunden-Tehachapi5 230 kV	1240	1342	1670	134.7%	124.4%	1668	134.5%	124.3%
			Magunden-Antelope 230 kV	895	944	1550	173.1%	164.2%	1551	173.3%	164.3%
			Existing Antelope-Vincent 230 kV	1150	1342	1505	130.8%	112.1%	1507	131.1%	112.3%
47	Double	Antelope-Tehachapi5 No.1 (or 2) 230 kV Magunden-Antelope 230 kV	Pardee-Pastoria-Warne 230 kV	1240	1342	1979	159.6%	147.4%	1376	111.0%	102.5%
49	Double	Antelope-Tehachapi5 No.1 230 kV Antelope-Tehachapi5 No.2 230 kV	Pardee-Pastoria-Warne 230 kV	1240	1342	Contingency Does Not Exist			1551	125.0%	115.5%
			Bailey-Pastoria 230 kV	1500	1500				1502	100.2%	100.2%
			Magunden-Antelope 230 kV	895	944				1249	139.6%	132.3%
51	Double	(Exist or New) Antelope-Vincent 230 kV New Antelope-Vincent 230 kV (Seg 2)	Pardee-Pastoria-Warne 230 kV	1240	1342	1411	113.8%	105.1%	1569	126.5%	116.9%

APPENDIX
POWER FLOW PLOTS

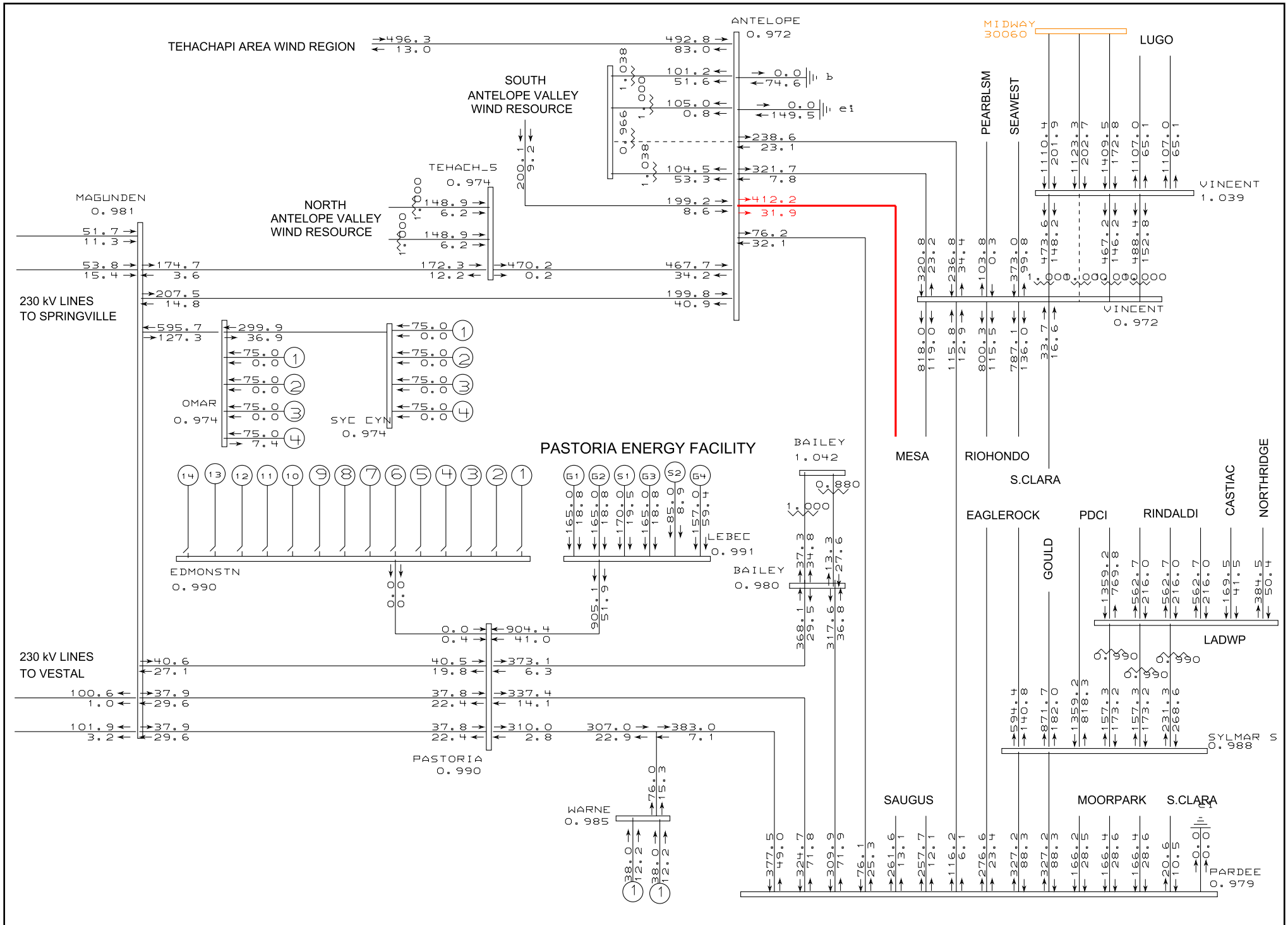

d:\projects143\pef\postpef157-fstr-hs.sav

Fri Dec 23 11:41:51 2005

CALPINE PASTORIA ADDITION: POST PROJECT
TECHNICAL REASSESSMENT WITHOUT ADDITIONAL UPGRADES
CASE STUDY: HEAVY SUMMER LOAD CONDITIONS WITH MAXIMUM

TOPOLOGY : PROPOSED ANTELOPE TRANSMISSION PROJECT (ENERGIZED AT 230)
WIND GENERATION

PSLF Program
pef.drw
Rating =1

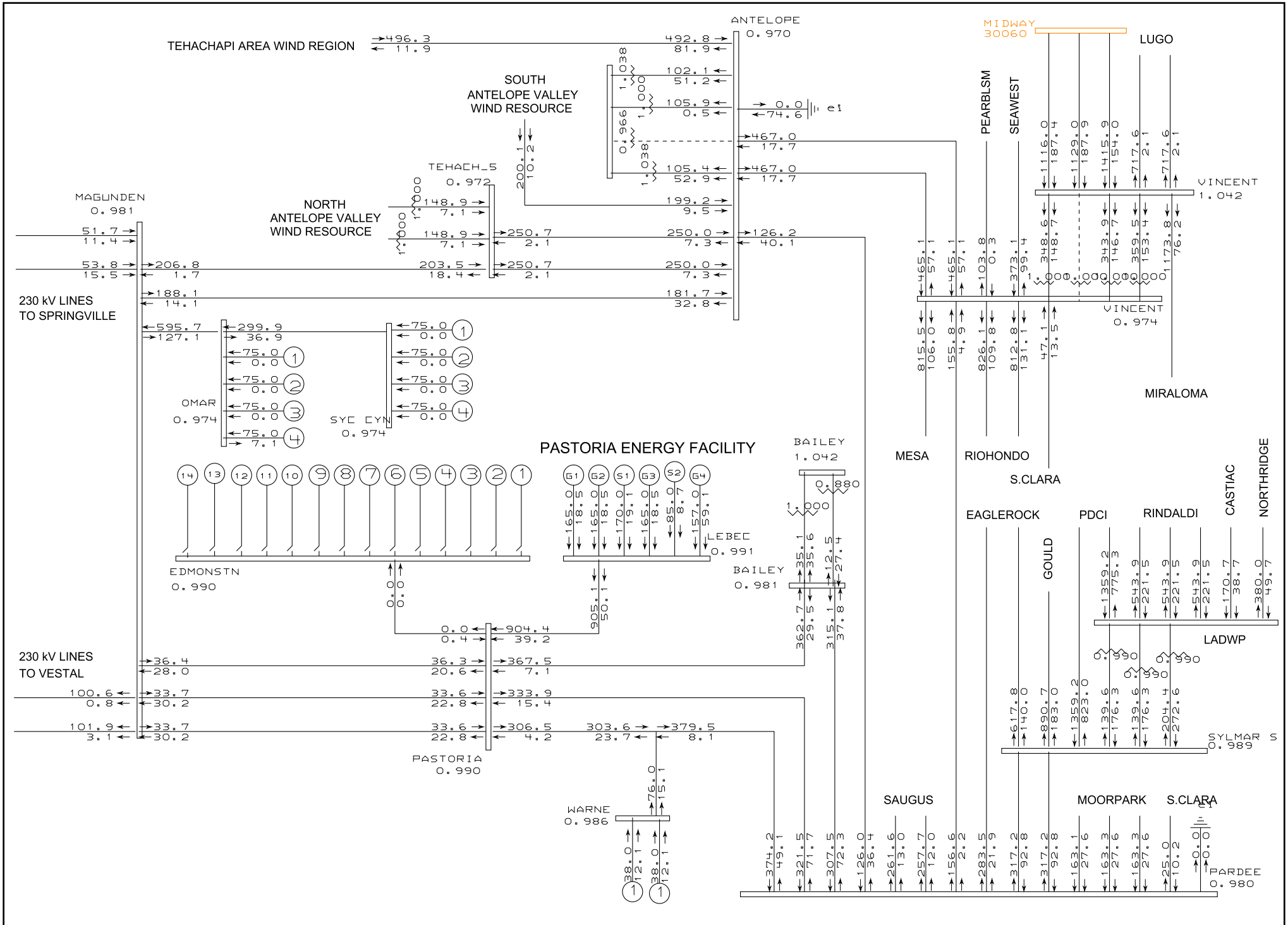

d:\projects143\pef\postpef157-fstr-hs-up.sav

Fri Dec 23 11:42:42 2005

CALPINE PASTORIA ADDITION: POST PROJECT
TECHNICAL REASSESSMENT WITH ADDITIONAL UPGRADES
CASE STUDY: HEAVY SUMMER LOAD CONDITIONS WITH MAXIMUM

TOPOLOGY : PROPOSED ANTELOPE TRANSMISSION PROJECT (ENERGIZED AT 230)
TEHACHAPI PHASE 2 INCLUDING NEW VINCENT-MIRA LOMA 500 KV IN-SERVICE
WIND GENERATION

PSLF Program
pef_up.drw
Rating =1

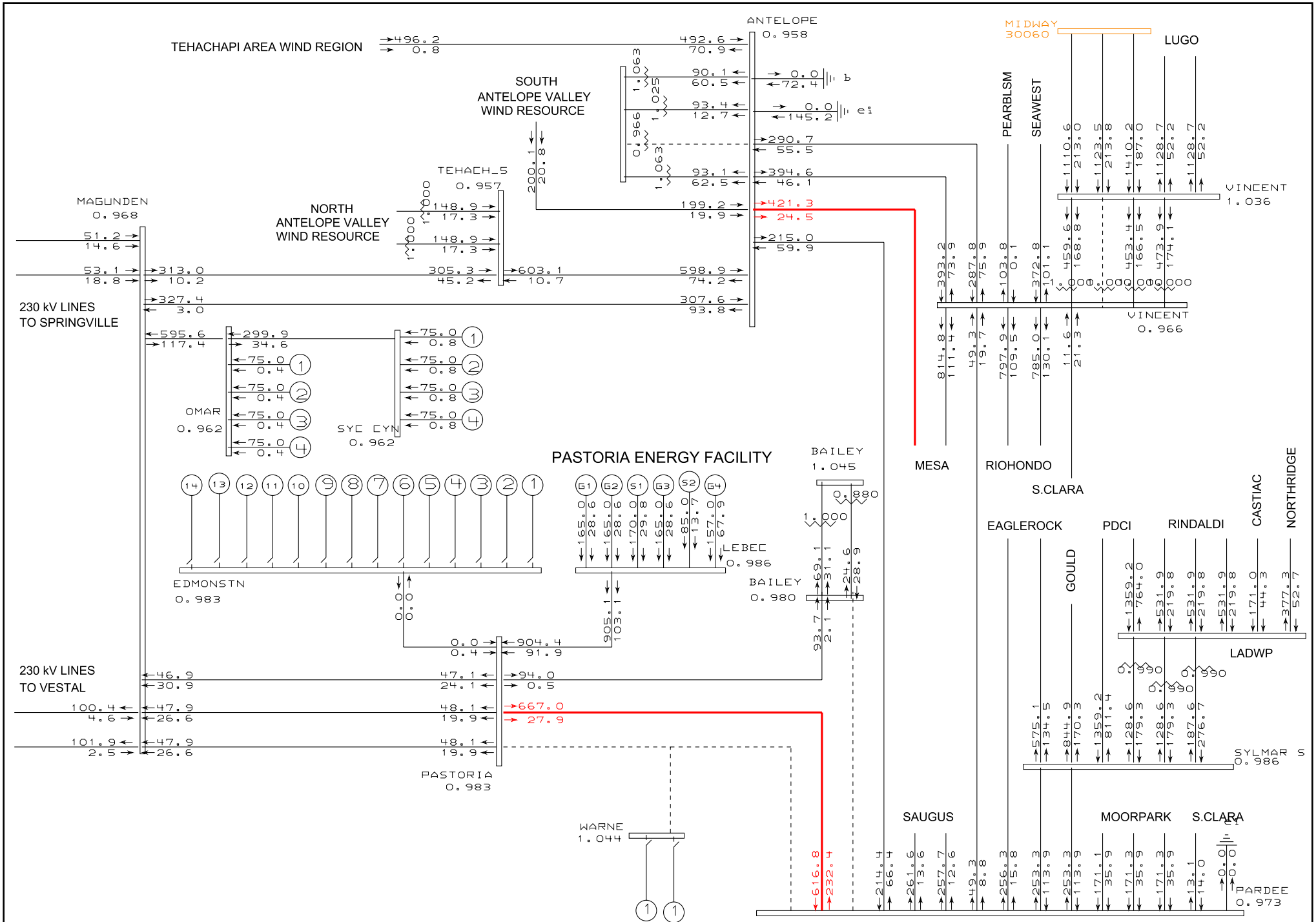

d:\projects143\pef\postpef157-fstr-hs.sav

Fri Dec 23 11:34:31 2005

CALPINE PASTORIA ADDITION: POST PROJECT
TECHNICAL REASSESSMENT WITHOUT ADDITIONAL UPGRADES
CASE STUDY: HEAVY SUMMER LOAD CONDITIONS WITH MAXIMUM WIND GENERATION

TOPOLOGY : PROPOSED ANTELOPE TRANSMISSION PROJECT (ENERGIZED AT 230)

PSLF Program
pef.drw
Rating =1

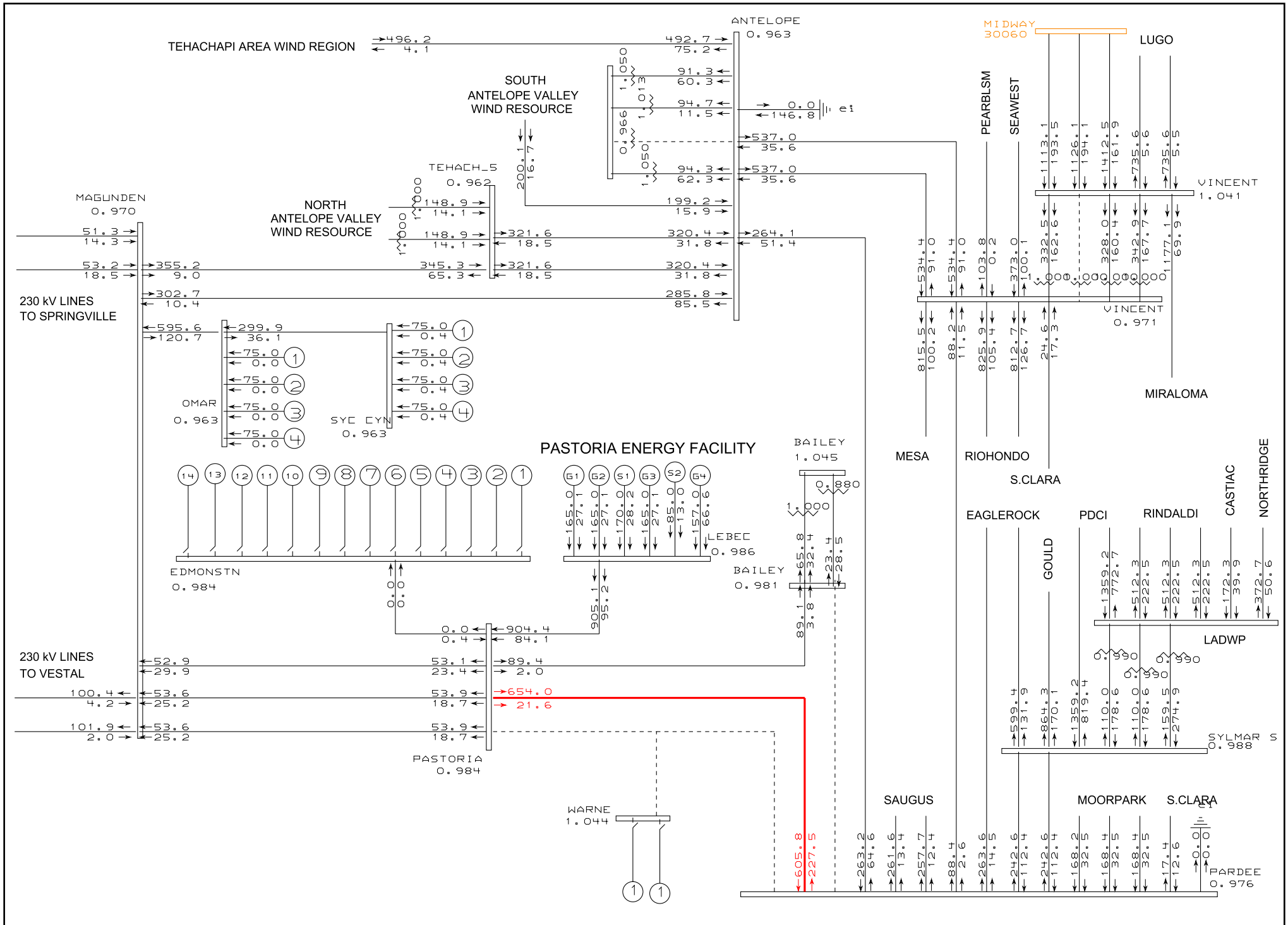

d:\projects143\pef\postpef157-fstr-hs-up.sav

Fri Dec 23 11:25:03 2005

CALPINE PASTORIA ADDITION: POST PROJECT
TECHNICAL REASSESSMENT WITH ADDITIONAL UPGRADES
CASE STUDY: HEAVY SUMMER LOAD CONDITIONS WITH MAXIMUM

TOPOLOGY : PROPOSED ANTELOPE TRANSMISSION PROJECT (ENERGIZED AT 230)
TEHACHAPI PHASE 2 INCLUDING NEW VINCENT-MIRA LOMA 500 KV IN-SERVICE
WIND GENERATION

PSLF Program
pef_up.drw
Rating =1

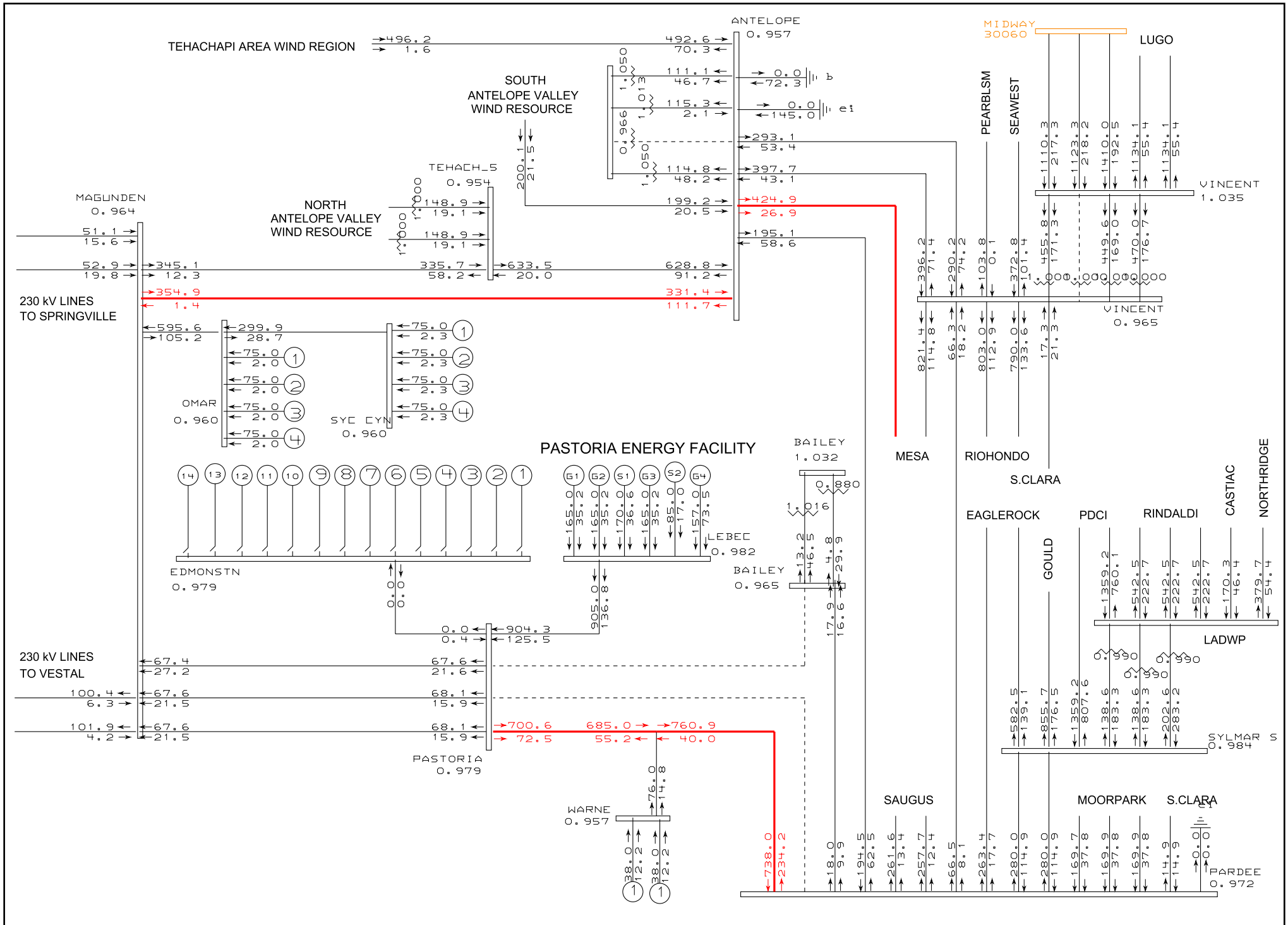

d:\projects143\pef\postpef157-fstr-hs.sav

Fri Dec 23 11:35:40 2005

CALPINE PASTORIA ADDITION: POST PROJECT
TECHNICAL REASSESSMENT WITHOUT ADDITIONAL UPGRADES
CASE STUDY: HEAVY SUMMER LOAD CONDITIONS WITH MAXIMUM

TOPOLOGY : PROPOSED ANTELOPE TRANSMISSION PROJECT (ENERGIZED AT 230)
WIND GENERATION

PSLF Program
pef.drw
Rating =1

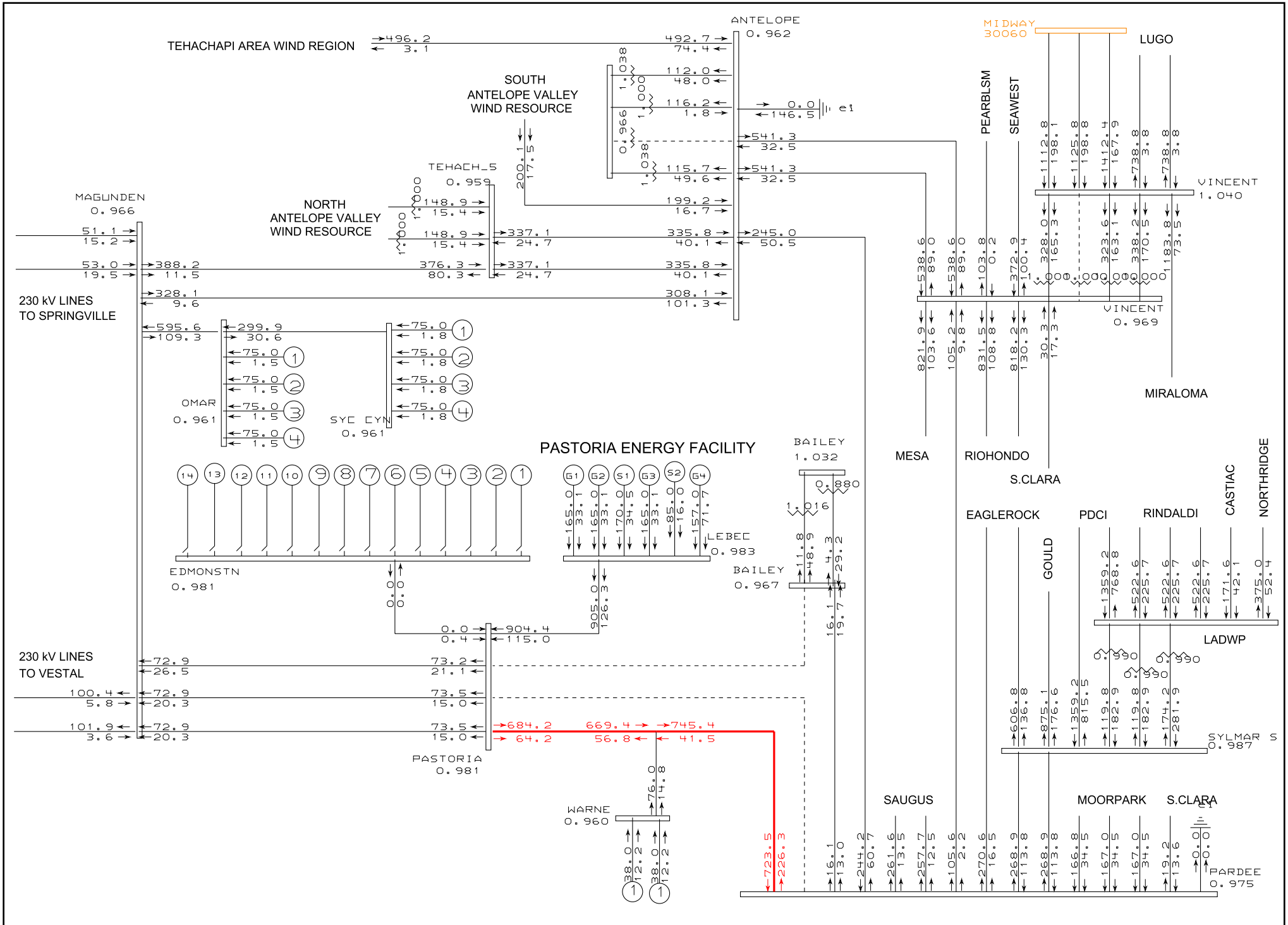

d:\projects143\pef\postpef157-fstr-hs-up.sav

Fri Dec 23 11:28:11 2005

CALPINE PASTORIA ADDITION: POST PROJECT
TECHNICAL REASSESSMENT WITH ADDITIONAL UPGRADES
CASE STUDY: HEAVY SUMMER LOAD CONDITIONS WITH MAXIMUM

TOPOLOGY : PROPOSED ANTELOPE TRANSMISSION PROJECT (ENERGIZED AT 230)
TEHACHAPI PHASE 2 INCLUDING NEW VINCENT-MIRA LOMA 500 KV IN-SERVICE
WIND GENERATION

PSLF Program
pef_up.drw
Rating =1

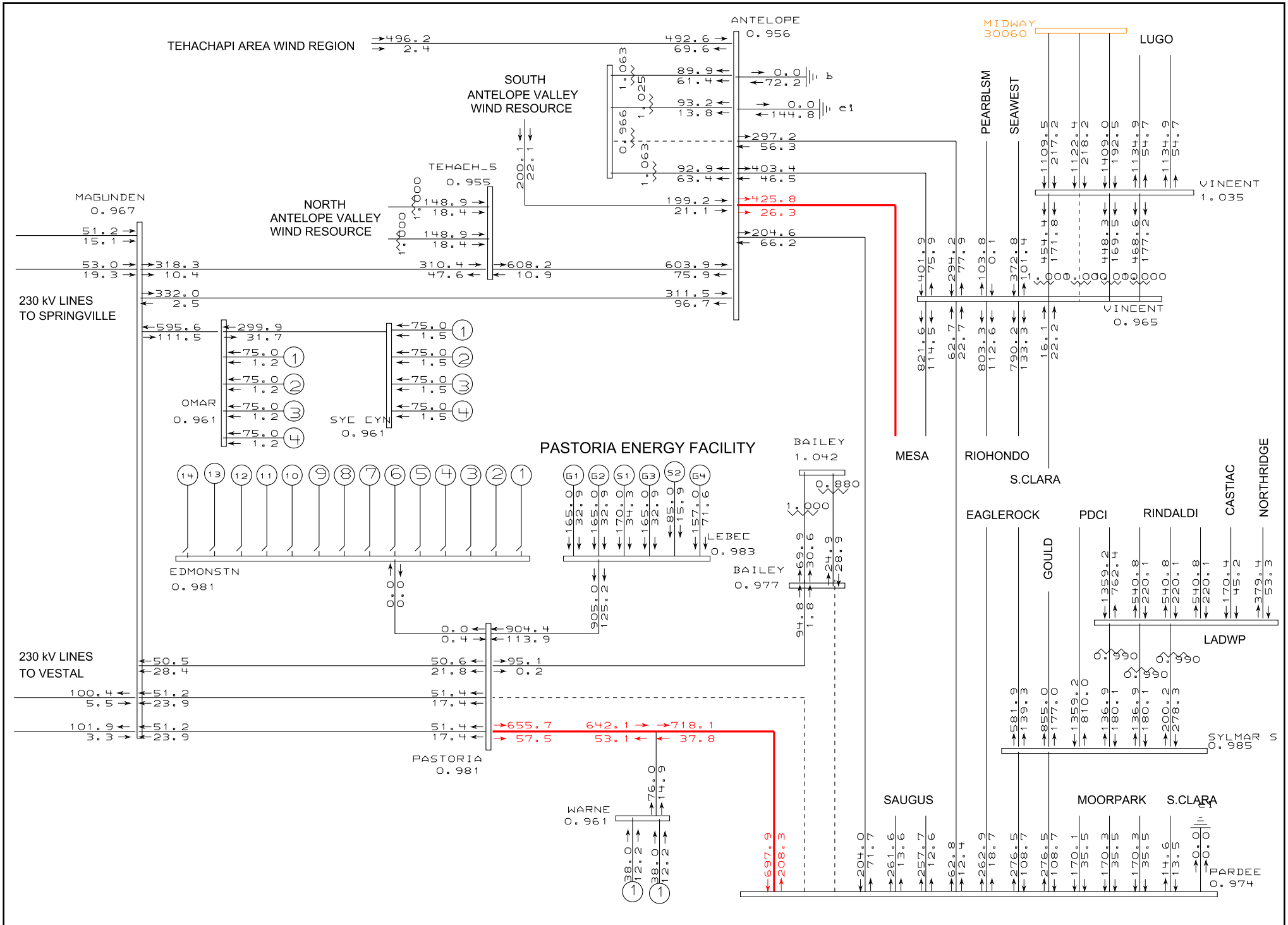

d:\projects143\pef\postpef157-fstr-hs.sav

Fri Dec 23 11:36:27 2005

CALPINE PASTORIA ADDITION: POST PROJECT
TECHNICAL REASSESSMENT WITHOUT ADDITIONAL UPGRADES
CASE STUDY: HEAVY SUMMER LOAD CONDITIONS WITH MAXIMUM WIND GENERATION

TOPOLOGY : PROPOSED ANTELOPE TRANSMISSION PROJECT (ENERGIZED AT 230)

PSLF Program
pef.drw
Rating =1

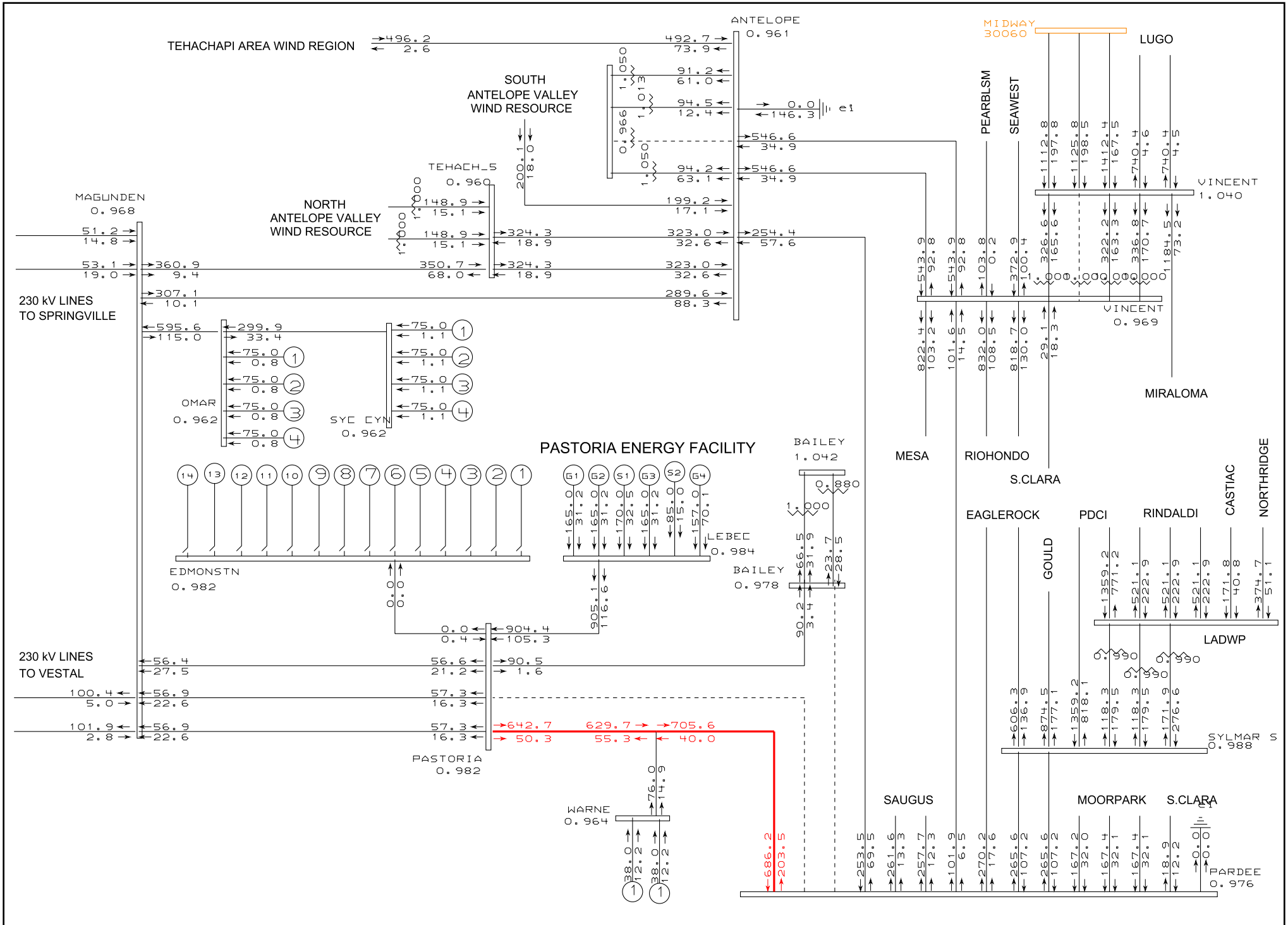

d:\projects143\pef\postpef157-fstr-hs-up.sav

Fri Dec 23 11:29:09 2005

CALPINE PASTORIA ADDITION: POST PROJECT
TECHNICAL REASSESSMENT WITH ADDITIONAL UPGRADES
CASE STUDY: HEAVY SUMMER LOAD CONDITIONS WITH MAXIMUM

TOPOLOGY : PROPOSED ANTELOPE TRANSMISSION PROJECT (ENERGIZED AT 230)
TEHACHAPI PHASE 2 INCLUDING NEW VINCENT-MIRA LOMA 500 KV IN-SERVICE
WIND GENERATION

PSLF Program
pef_up.drw
Rating =1

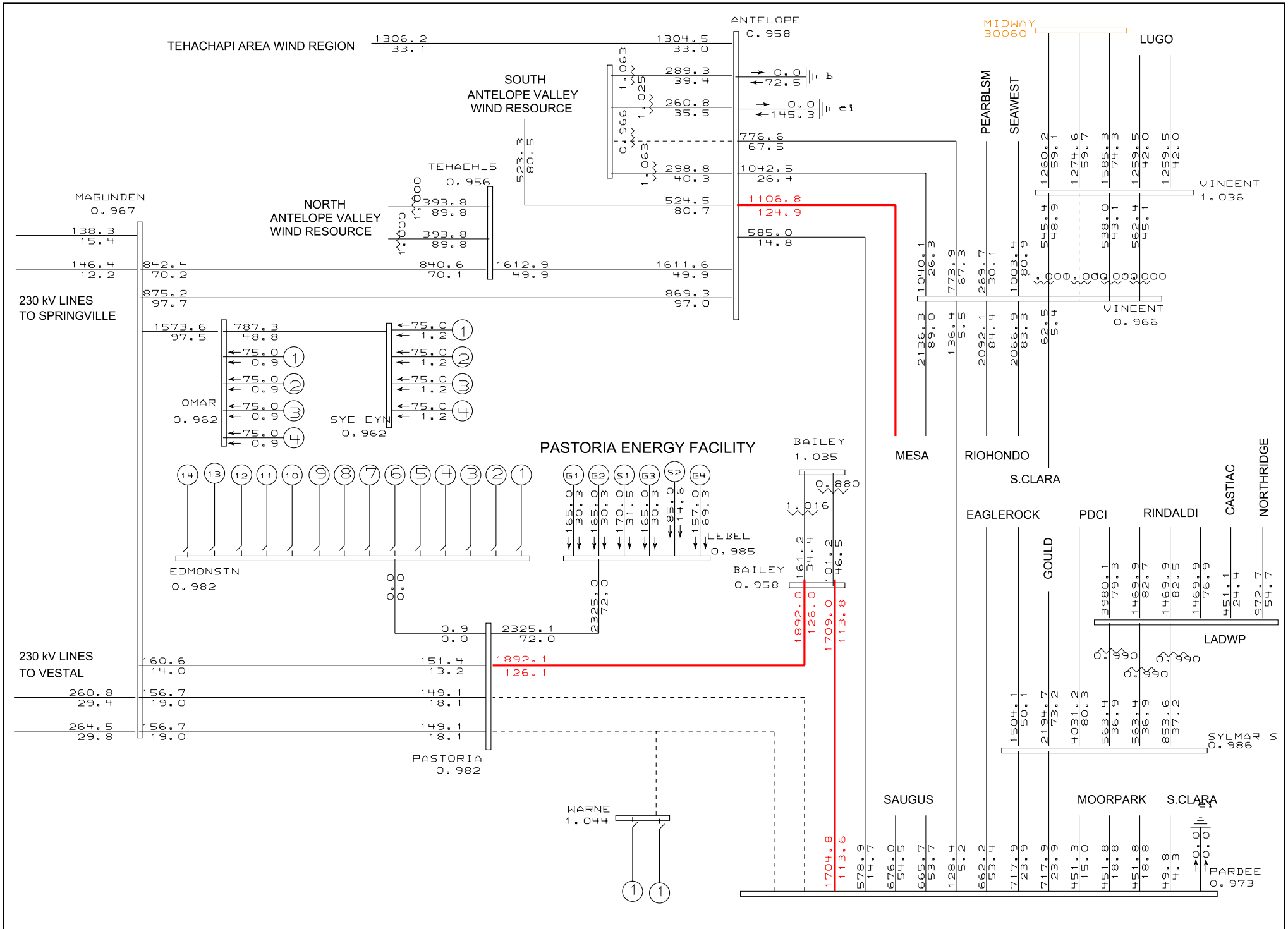

d:\projects143\pef\postpef157-fstr-hs.sav

Fri Dec 23 11:32:10 2005

CALPINE PASTORIA ADDITION: POST PROJECT TECHNICAL REASSESSMENT WITHOUT ADDITIONAL UPGRADES CASE STUDY: HEAVY SUMMER LOAD CONDITIONS WITH MAXIMUM	TOPOLOGY : PROPOSED ANTELOPE TRANSMISSION PROJECT (ENERGIZED AT 230) WIND GENERATION	PSLF Program pef.drw Rating =1

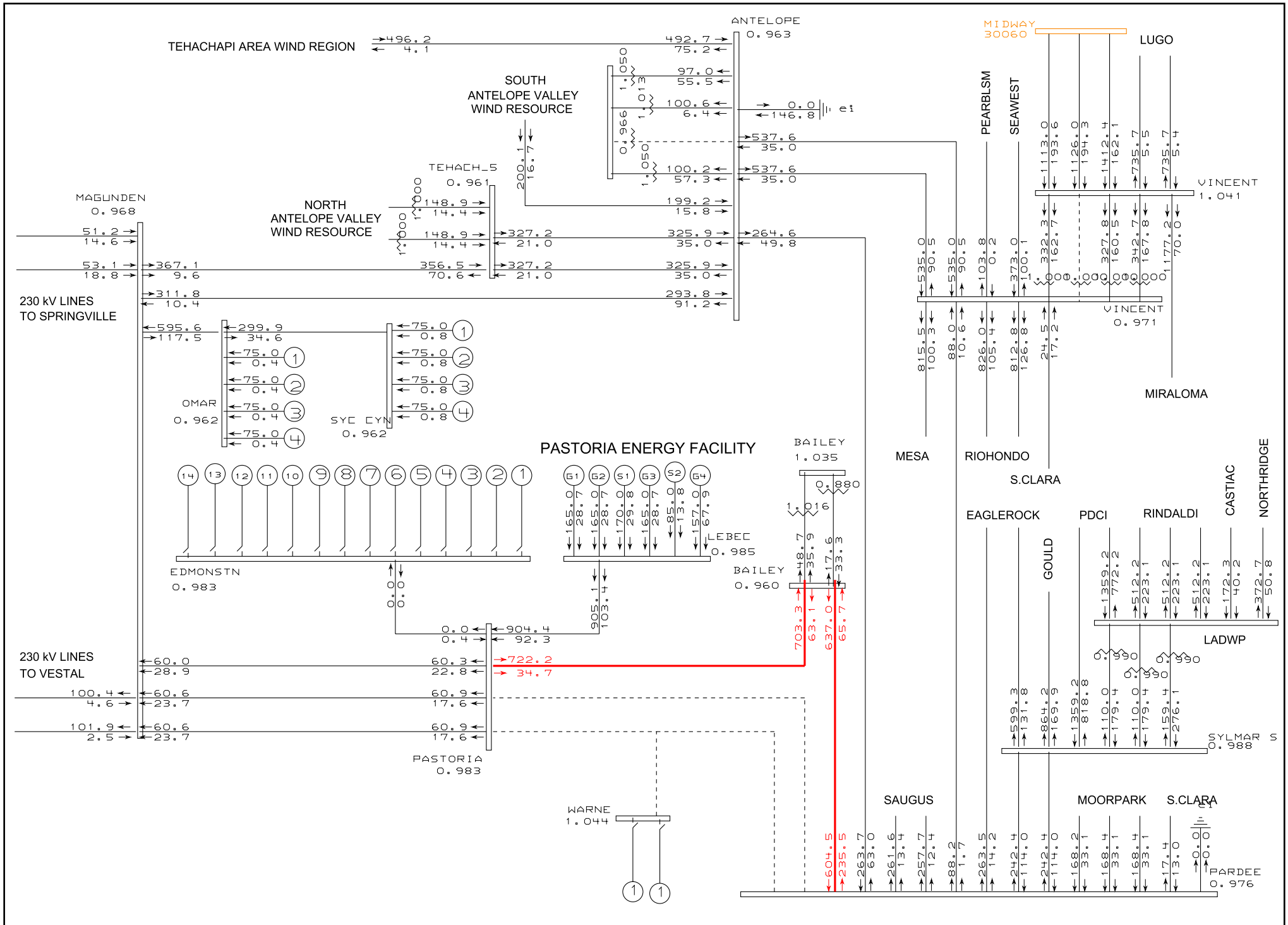

d:\projects143\pef\postpef157-fstr-hs-up.sav

Fri Dec 23 11:26:25 2005

CALPINE PASTORIA ADDITION: POST PROJECT
TECHNICAL REASSESSMENT WITH ADDITIONAL UPGRADES
CASE STUDY: HEAVY SUMMER LOAD CONDITIONS WITH MAXIMUM

TOPOLOGY : PROPOSED ANTELOPE TRANSMISSION PROJECT (ENERGIZED AT 230)
TEHACHAPI PHASE 2 INCLUDING NEW VINCENT-MIRA LOMA 500 KV IN-SERVICE
WIND GENERATION

PSLF Program
pef_up.drw
Rating =1

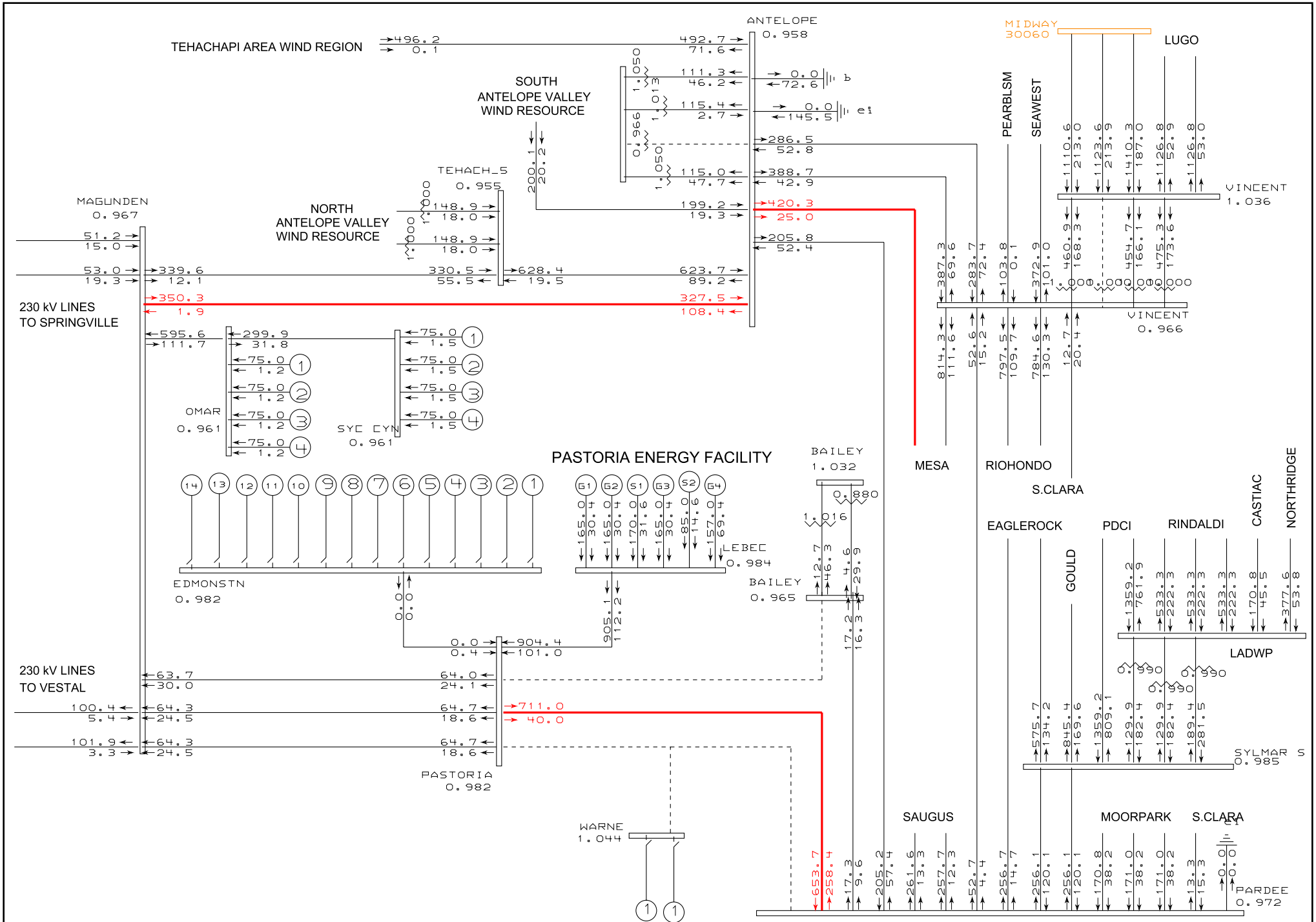

d:\projects143\pef\postpef157-fstr-hs.sav

Fri Dec 23 11:33:50 2005

CALPINE PASTORIA ADDITION: POST PROJECT
TECHNICAL REASSESSMENT WITHOUT ADDITIONAL UPGRADES
CASE STUDY: HEAVY SUMMER LOAD CONDITIONS WITH MAXIMUM

TOPOLOGY : PROPOSED ANTELOPE TRANSMISSION PROJECT (ENERGIZED AT 230)
WIND GENERATION

PSLF Program
pef.drw
Rating =1

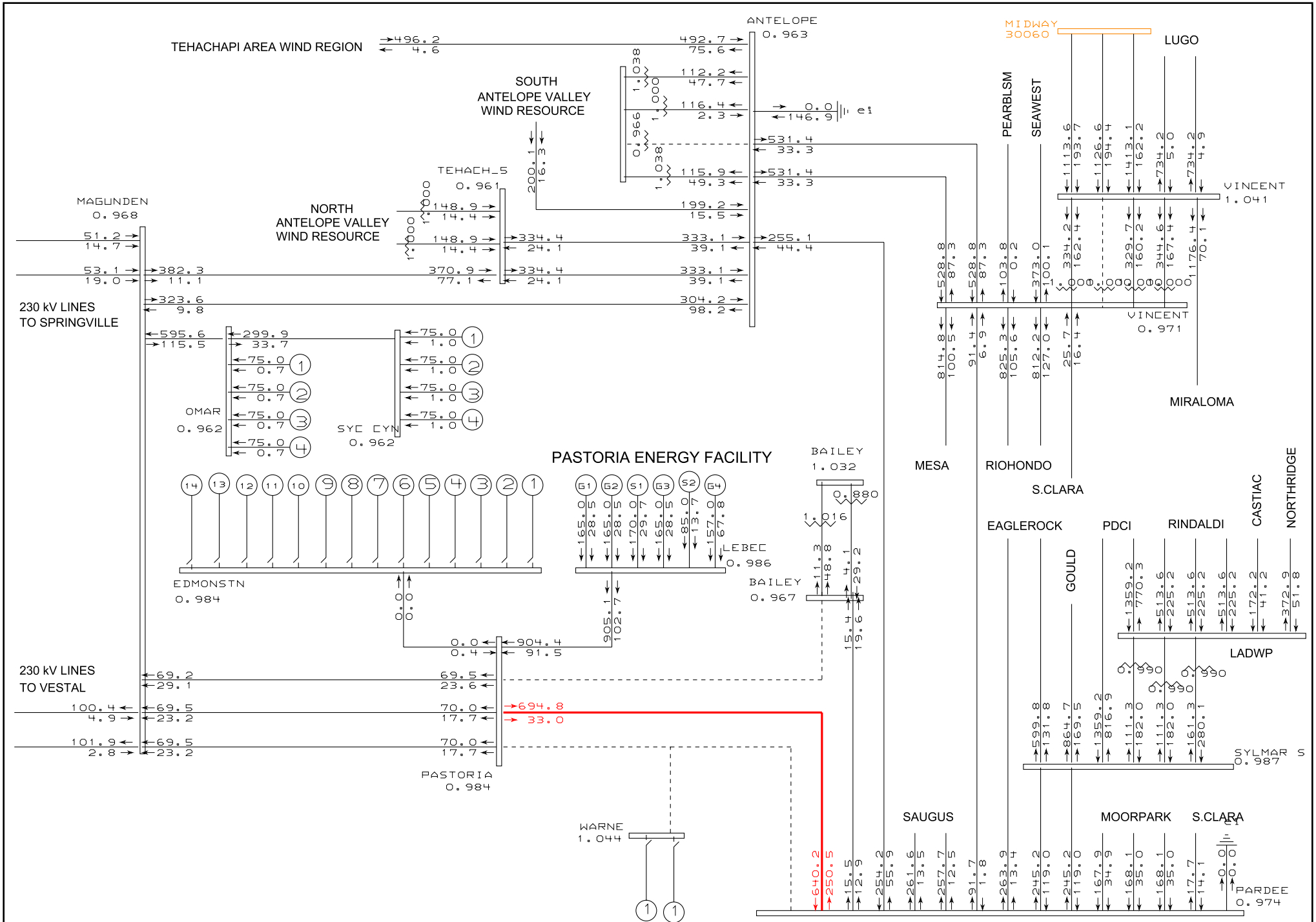

d:\projects143\pef\postpef157-fstr-hs-up.sav

Fri Dec 23 11:25:28 2005

CALPINE PASTORIA ADDITION: POST PROJECT
TECHNICAL REASSESSMENT WITH ADDITIONAL UPGRADES
CASE STUDY: HEAVY SUMMER LOAD CONDITIONS WITH MAXIMUM

TOPOLOGY : PROPOSED ANTELOPE TRANSMISSION PROJECT (ENERGIZED AT 230)
TEHACHAPI PHASE 2 INCLUDING NEW VINCENT-MIRA LOMA 500 KV IN-SERVICE
WIND GENERATION

PSLF Program
pef_up.drw
Rating =1

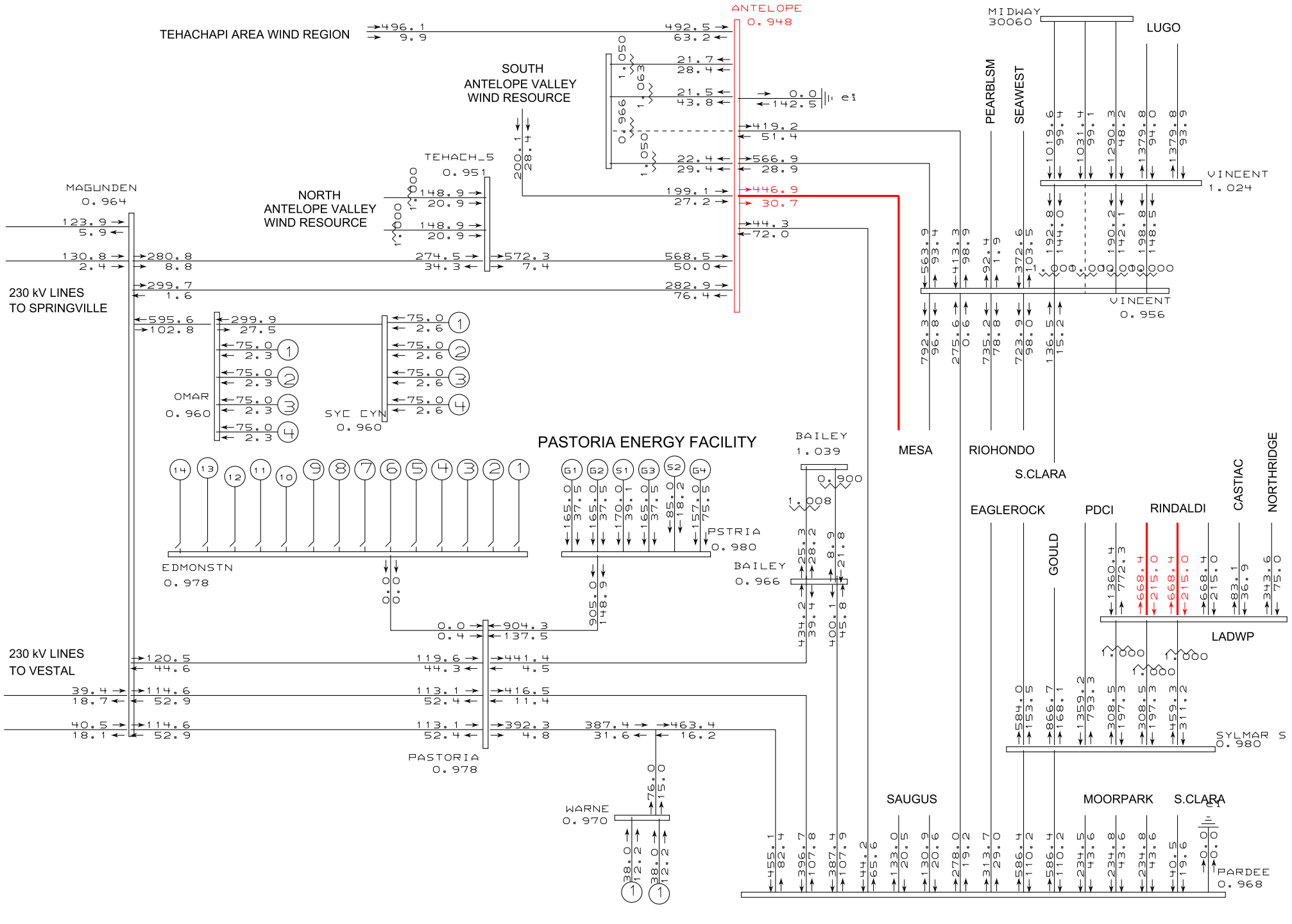

d:\projects143\pef\postpef157-fstr-lsp.sav

Fri Dec 23 11:46:28 2005

CALPINE PASTORIA ADDITION: POST PROJECT
TECHNICAL REASSESSMENT WITH ADDITIONAL UPGRADES
CASE STUDY: LIGHT SPRING LOAD CONDITIONS WITH MAXIMUM

TOPOLOGY : PROPOSED ANTELOPE TRANSMISSION PROJECT (ENERGIZED AT 230)
WIND GENERATION

PSLF Program
pef.drw
Rating =1

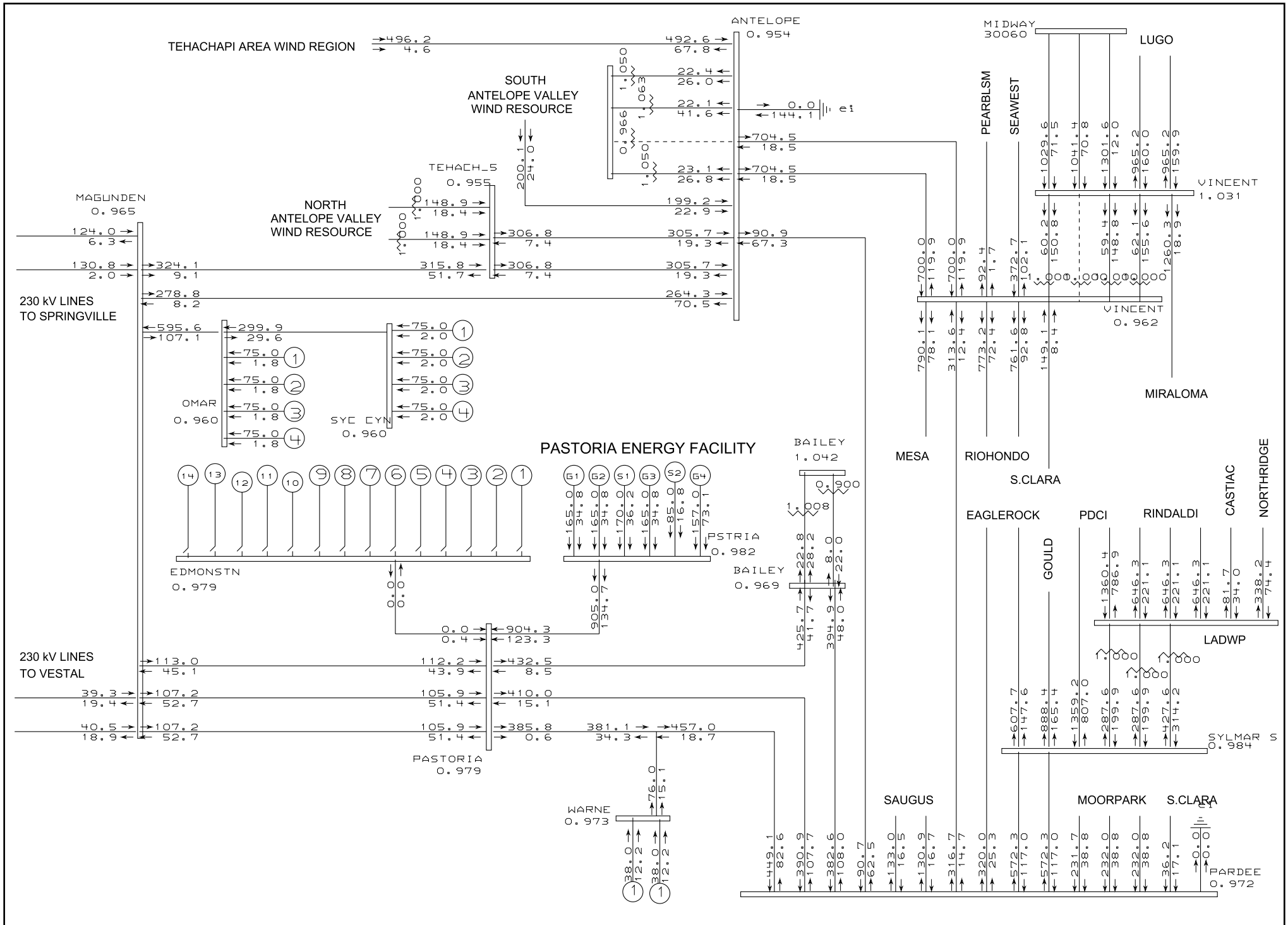

d:\projects143\pef\postpef157-fstr-lsp-up.sav

Fri Dec 23 11:51:57 2005

CALPINE PASTORIA ADDITION: POST PROJECT
TECHNICAL REASSESSMENT WITH ADDITIONAL UPGRADES
CASE STUDY: LIGHT SPRING LOAD CONDITIONS WITH MAXIMUM

TOPOLOGY : PROPOSED ANTELOPE TRANSMISSION PROJECT (ENERGIZED AT 230) I
TEHACHAPI PHASE 2 INCLUDING NEW VINCENT-MIRA LOMA 500 KV IN-SERVICE
WIND GENERATION

PSLF Program
pef_up.drw
Rating =1

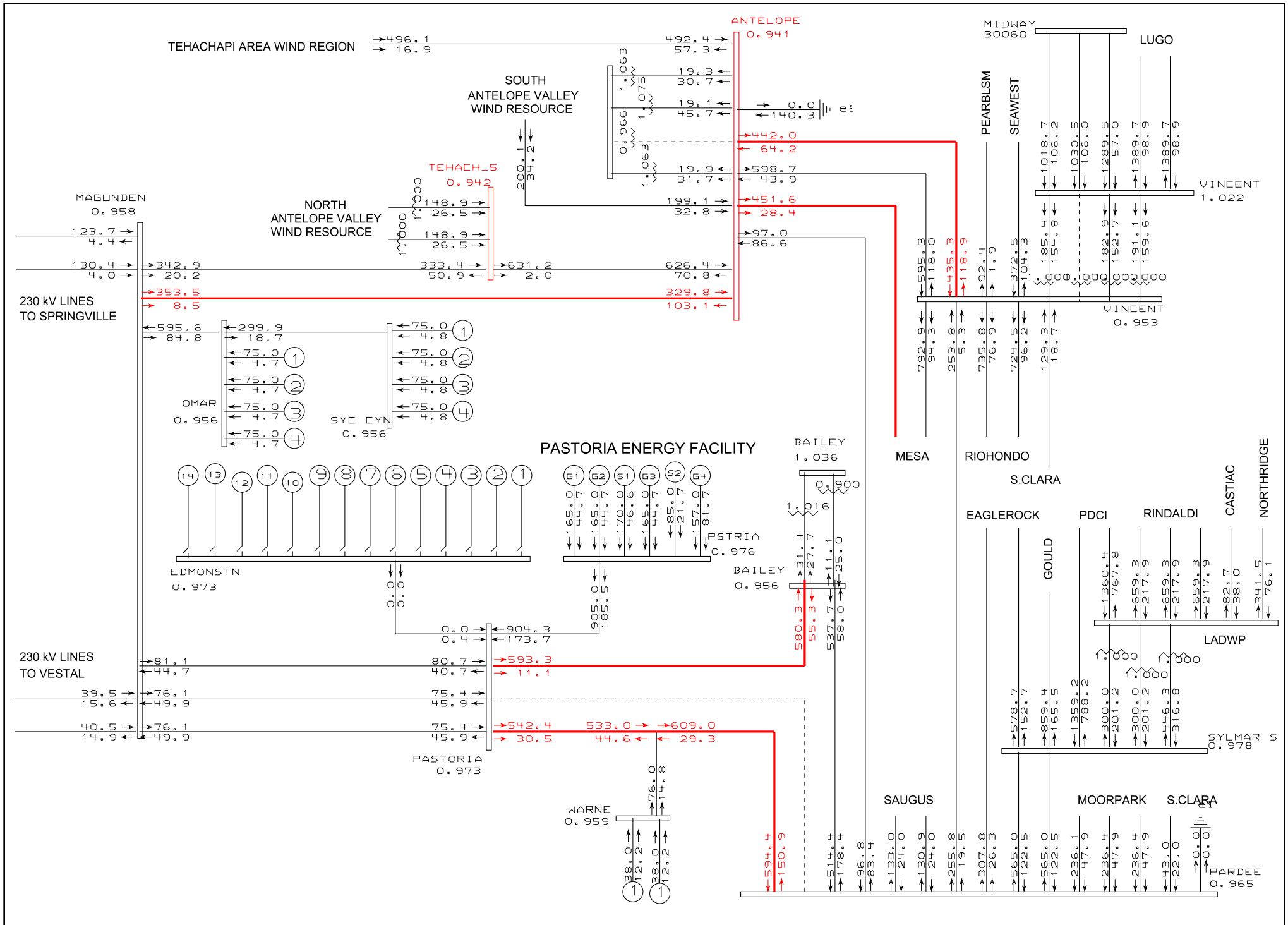

d:\projects143\pef\postpef157-fstr-lsp.sav

Fri Dec 23 11:47:42 2005

CALPINE PASTORIA ADDITION: POST PROJECT
TECHNICAL REASSESSMENT WITH ADDITIONAL UPGRADES
CASE STUDY: LIGHT SPRING LOAD CONDITIONS WITH MAXIMUM

TOPOLOGY : PROPOSED ANTELOPE TRANSMISSION PROJECT (ENERGIZED AT 230) I
WIND GENERATION

PSLF Program
pef.drw
Rating =1

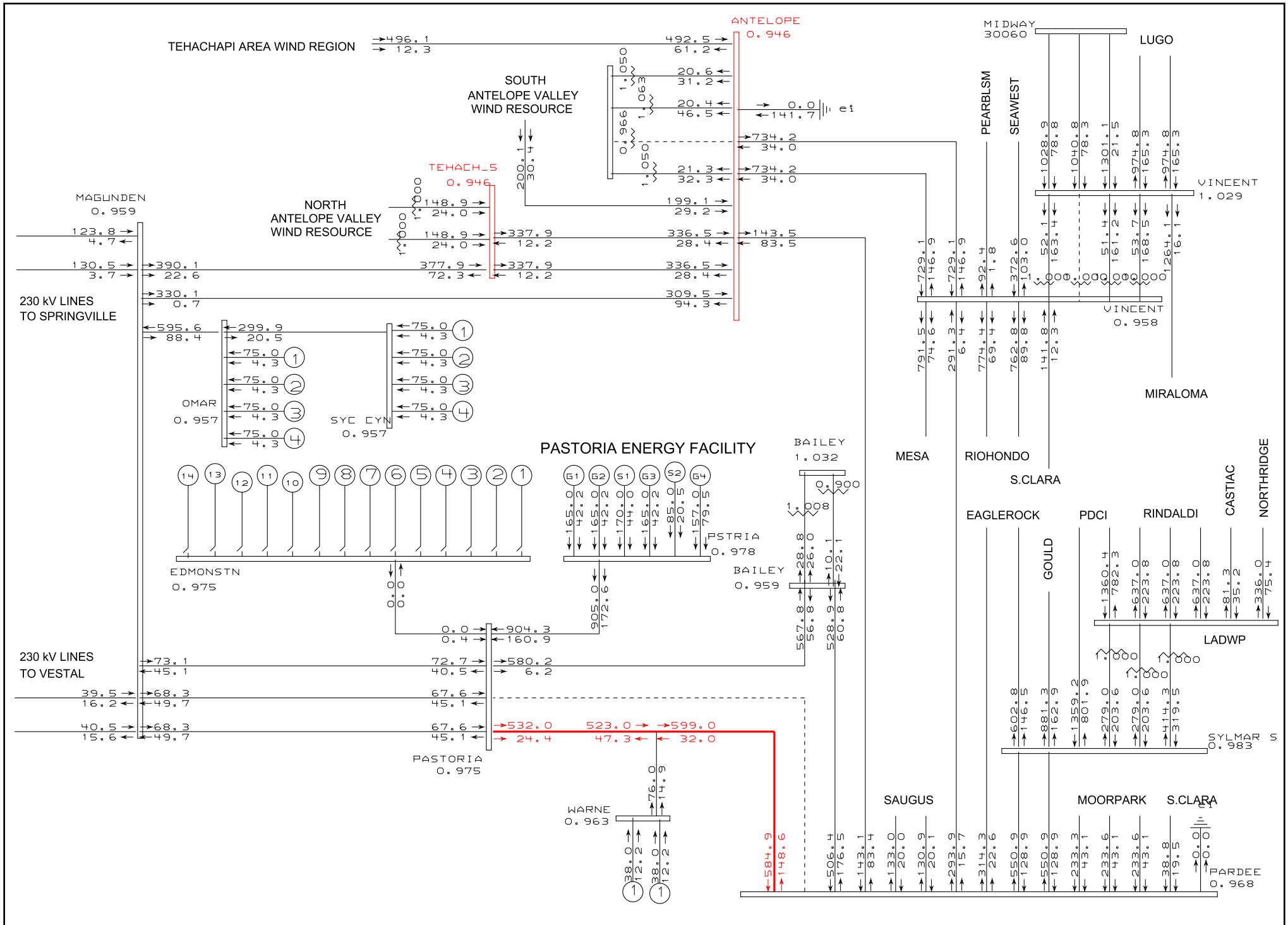

d:\projects143\pef\postpef157-fstr-lsp-up.sav

Fri Dec 23 12:01:59 2005

CALPINE PASTORIA ADDITION: POST PROJECT
TECHNICAL REASSESSMENT WITH ADDITIONAL UPGRADES
CASE STUDY: LIGHT SPRING LOAD CONDITIONS WITH MAXIMUM

TOPOLOGY : PROPOSED ANTELOPE TRANSMISSION PROJECT (ENERGIZED AT 230)
TEHACHAPI PHASE 2 INCLUDING NEW VINCENT-MIRA LOMA 500 KV IN-SERVICE
WIND GENERATION

PSLF Program
pef_up.drw
Rating =1

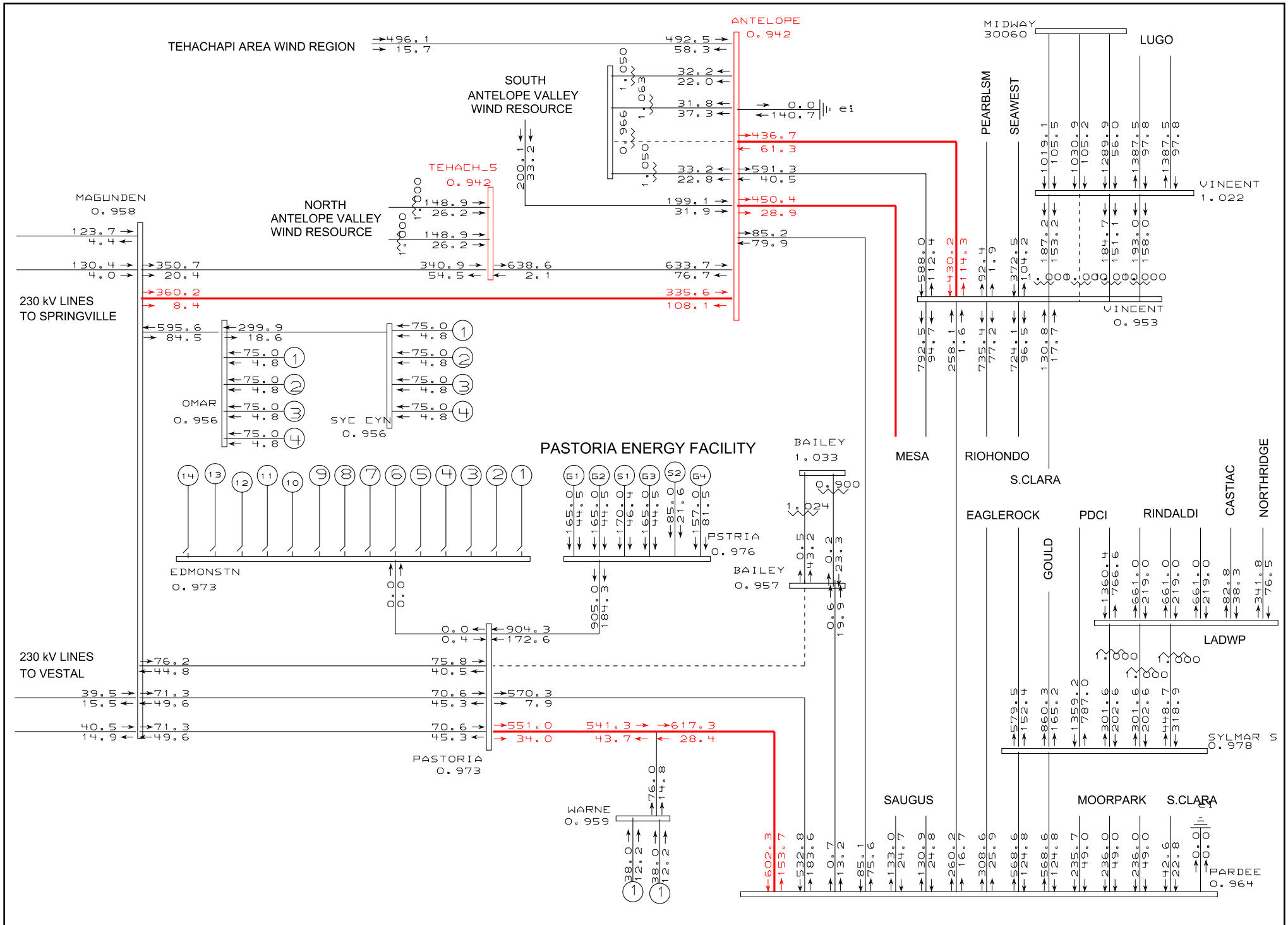

d:\projects143\pef\postpef157-fstr-lsp.sav

Fri Dec 23 11:48:16 2005

CALPINE PASTORIA ADDITION: POST PROJECT
TECHNICAL REASSESSMENT WITH ADDITIONAL UPGRADES
CASE STUDY: LIGHT SPRING LOAD CONDITIONS WITH MAXIMUM

TOPOLOGY : PROPOSED ANTELOPE TRANSMISSION PROJECT (ENERGIZED AT 230)
WIND GENERATION

PSLF Program
pef.drw
Rating =1

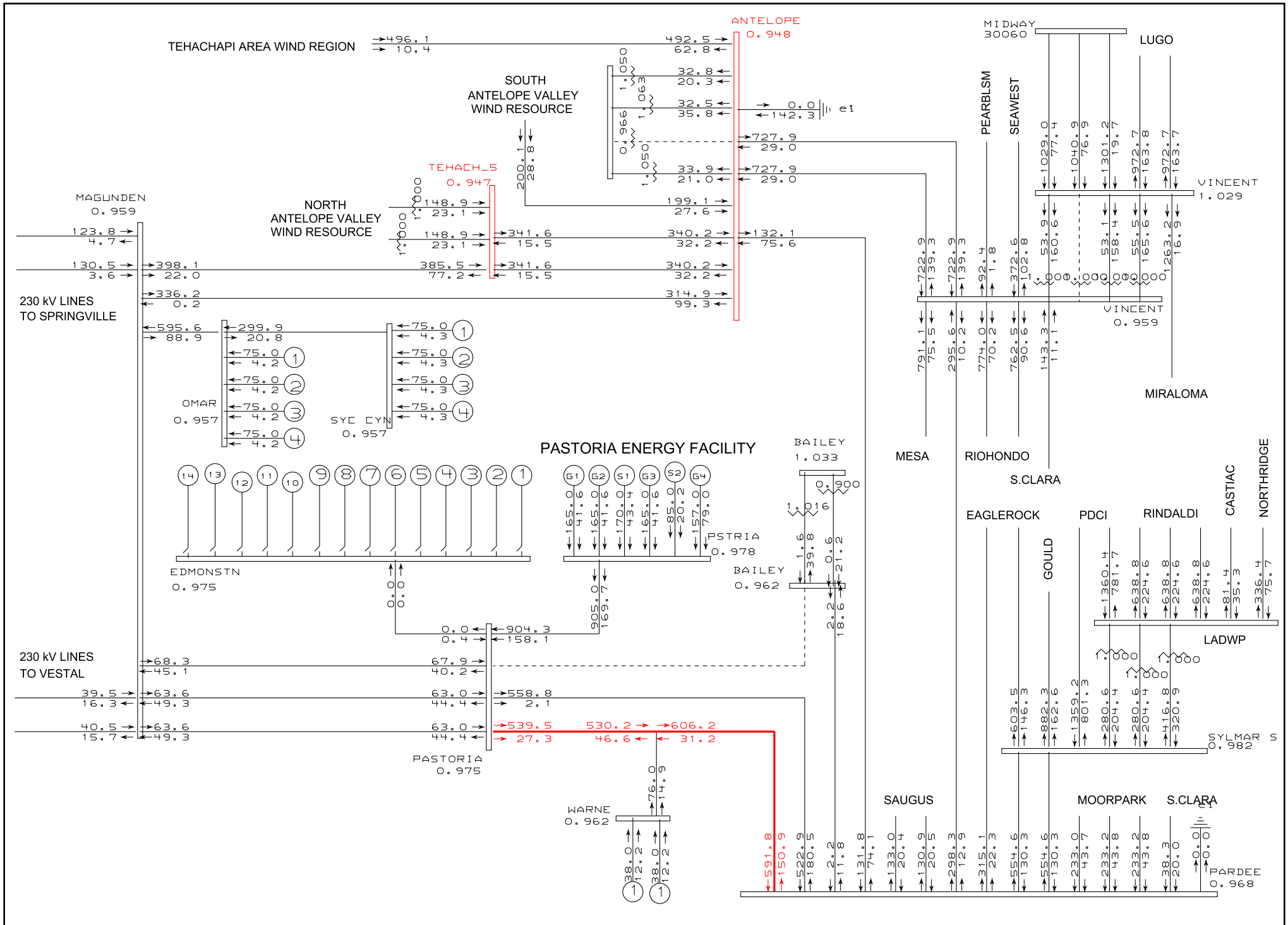

d:\projects143\pef\postpef157-fstr-lsp-up.sav

Fri Dec 23 12:02:28 2005

CALPINE PASTORIA ADDITION: POST PROJECT
TECHNICAL REASSESSMENT WITH ADDITIONAL UPGRADES
CASE STUDY: LIGHT SPRING LOAD CONDITIONS WITH MAXIMUM

TOPOLOGY : PROPOSED ANTELOPE TRANSMISSION PROJECT (ENERGIZED AT 230) I
TEHACHAPI PHASE 2 INCLUDING NEW VINCENT-MIRA LOMA 500 KV IN-SERVICE
WIND GENERATION

PSLF Program
pef_up.drw
Rating =1

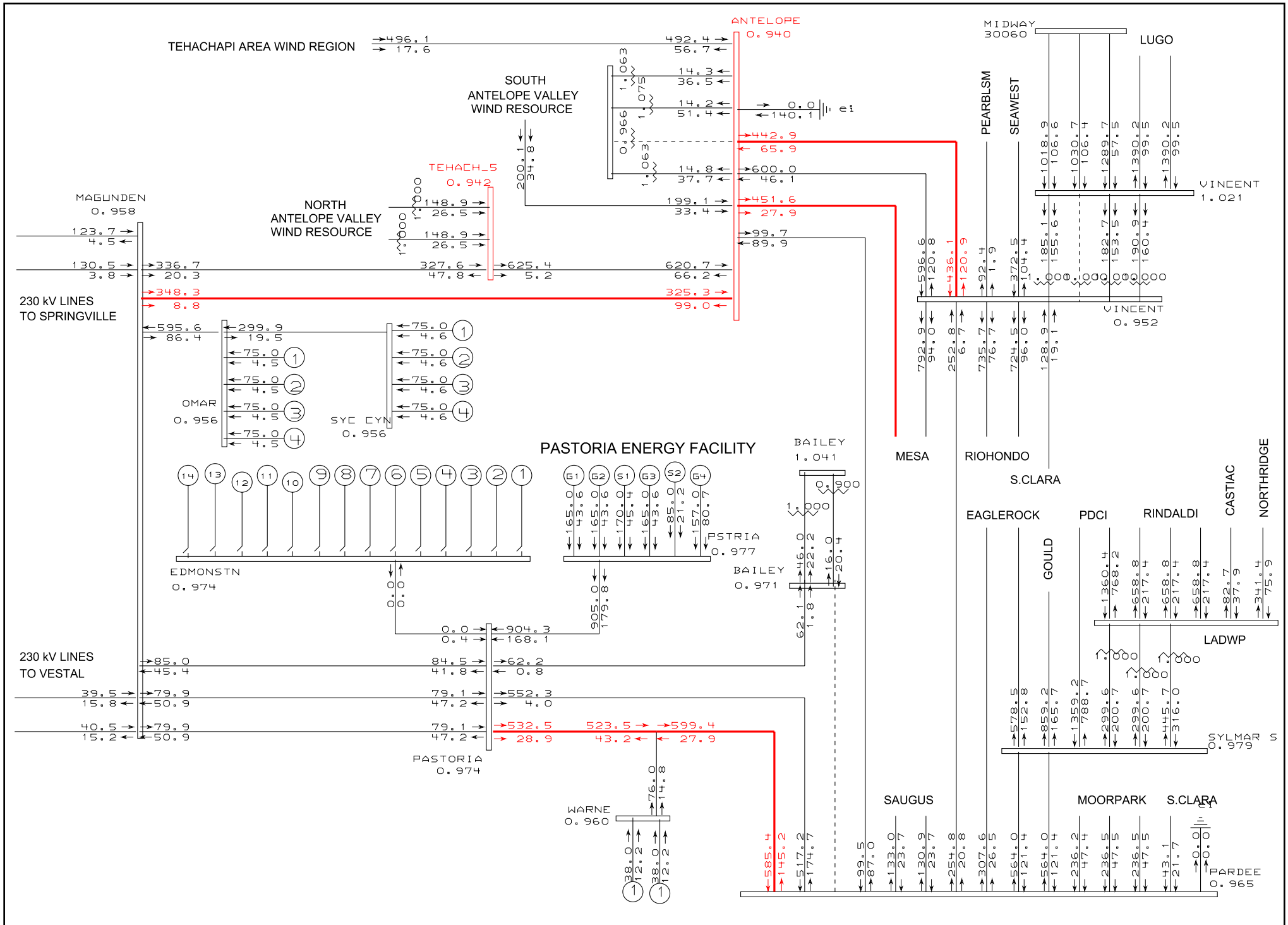

d:\projects143\pef\postpef157-fstr-lsp.sav

Fri Dec 23 11:48:39 2005

CALPINE PASTORIA ADDITION: POST PROJECT
TECHNICAL REASSESSMENT WITH ADDITIONAL UPGRADES
CASE STUDY: LIGHT SPRING LOAD CONDITIONS WITH MAXIMUM

TOPOLOGY : PROPOSED ANTELOPE TRANSMISSION PROJECT (ENERGIZED AT 230) I
WIND GENERATION

PSLF Program
pef.drw
Rating =1

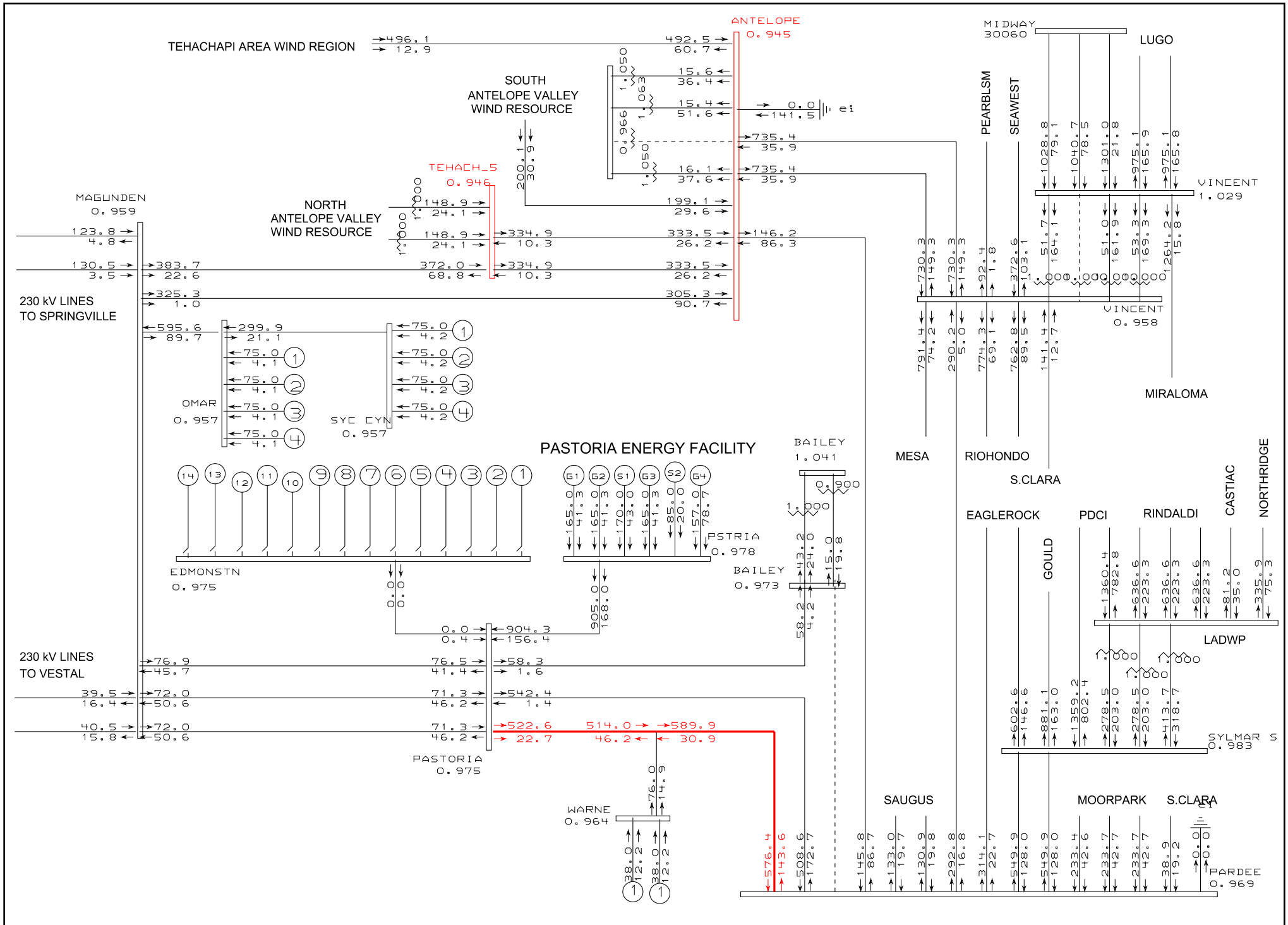

d:\projects143\pef\postpef157-fstr-lsp-up.sav

Fri Dec 23 12:02:57 2005

CALPINE PASTORIA ADDITION: POST PROJECT
TECHNICAL REASSESSMENT WITH ADDITIONAL UPGRADES
CASE STUDY: LIGHT SPRING LOAD CONDITIONS WITH MAXIMUM

TOPOLOGY : PROPOSED ANTELOPE TRANSMISSION PROJECT (ENERGIZED AT 230) I
TEHACHAPI PHASE 2 INCLUDING NEW VINCENT-MIRA LOMA 500 KV IN-SERVICE
WIND GENERATION

PSLF Program
pef_up.drw
Rating =1

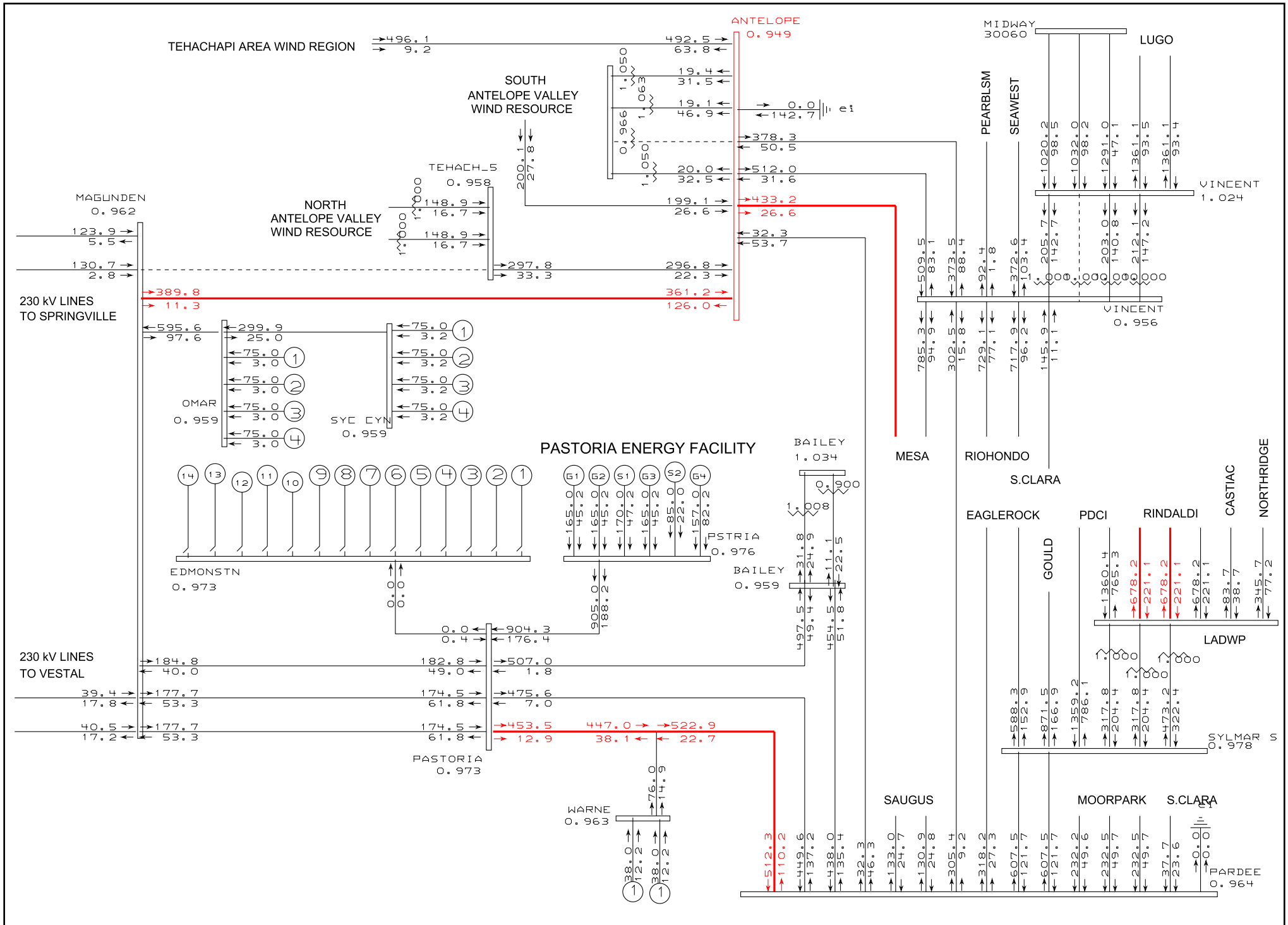

d:\projects143\pef\postpef157-fstr-lsp.sav

Fri Dec 23 11:49:24 2005

CALPINE PASTORIA ADDITION: POST PROJECT
TECHNICAL REASSESSMENT WITH ADDITIONAL UPGRADES
CASE STUDY: LIGHT SPRING LOAD CONDITIONS WITH MAXIMUM

TOPOLOGY : PROPOSED ANTELOPE TRANSMISSION PROJECT (ENERGIZED AT 230) I
WIND GENERATION

PSLF Program
pef.drw
Rating =1

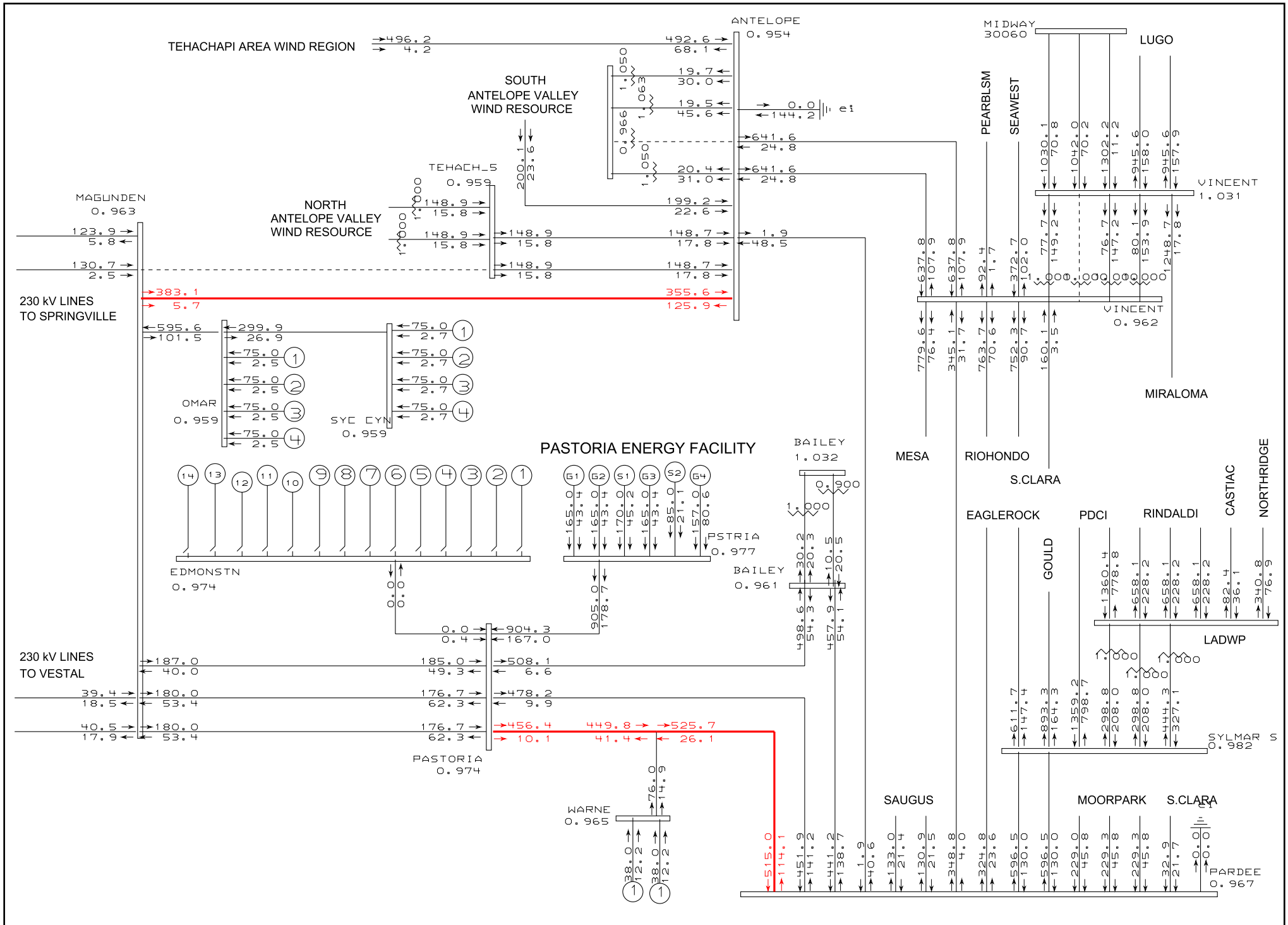

d:\projects143\pef\postpef157-fstr-lsp-up.sav

Fri Dec 23 12:03:34 2005

CALPINE PASTORIA ADDITION: POST PROJECT
TECHNICAL REASSESSMENT WITH ADDITIONAL UPGRADES
CASE STUDY: LIGHT SPRING LOAD CONDITIONS WITH MAXIMUM

TOPOLOGY : PROPOSED ANTELOPE TRANSMISSION PROJECT (ENERGIZED AT 230)
TEHACHAPI PHASE 2 INCLUDING NEW VINCENT-MIRA LOMA 500 KV IN-SERVICE
WIND GENERATION

PSLF Program
pef_up.drw
Rating =1

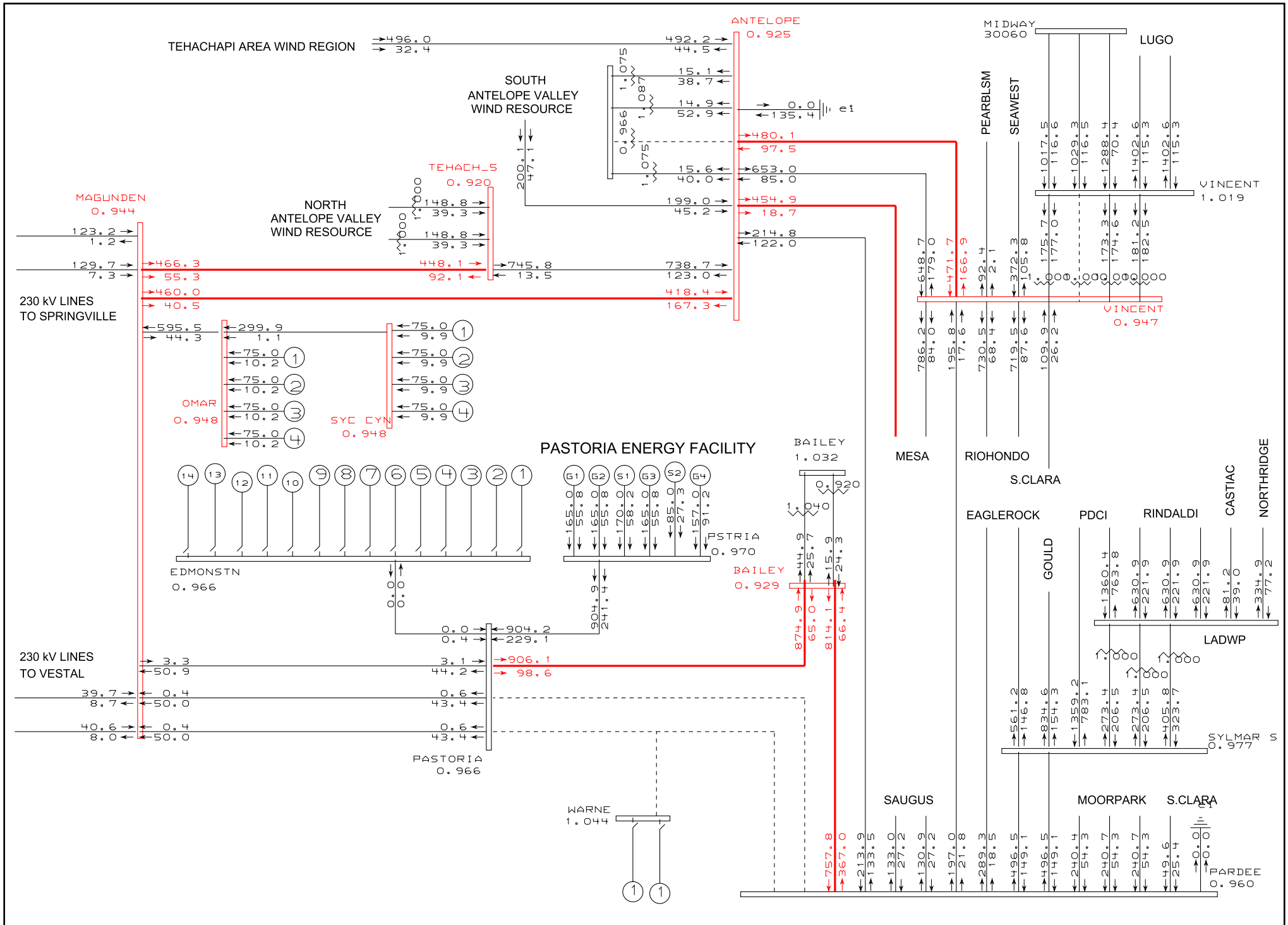

d:\projects143\pef\postpef157-fstr-lsp.sav

Fri Dec 23 12:09:20 2005

CALPINE PASTORIA ADDITION: POST PROJECT
TECHNICAL REASSESSMENT WITH ADDITIONAL UPGRADES
CASE STUDY: LIGHT SPRING LOAD CONDITIONS WITH MAXIMUM

TOPOLOGY : PROPOSED ANTELOPE TRANSMISSION PROJECT (ENERGIZED AT 230) I
WIND GENERATION

PSLF Program
pef.drw
Rating =1

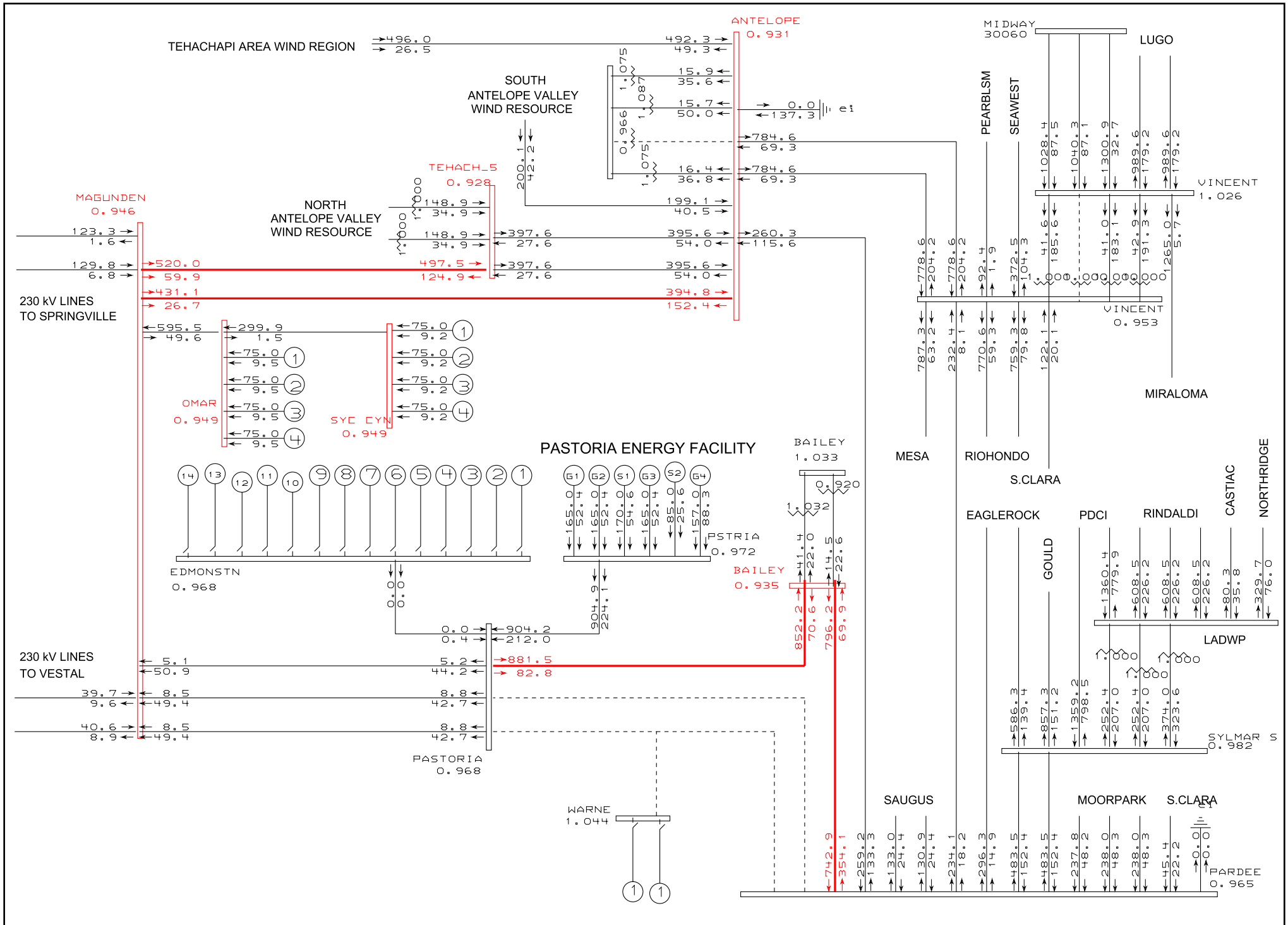

d:\projects143\pef\postpef157-fstr-lsp-up.sav

Fri Dec 23 12:06:42 2005

CALPINE PASTORIA ADDITION: POST PROJECT
TECHNICAL REASSESSMENT WITH ADDITIONAL UPGRADES
CASE STUDY: LIGHT SPRING LOAD CONDITIONS WITH MAXIMUM

TOPOLOGY : PROPOSED ANTELOPE TRANSMISSION PROJECT (ENERGIZED AT 230)
TEHACHAPI PHASE 2 INCLUDING NEW VINCENT-MIRA LOMA 500 kV IN-SERVICE
WIND GENERATION

PSLF Program
pef_up.drw
Rating =1

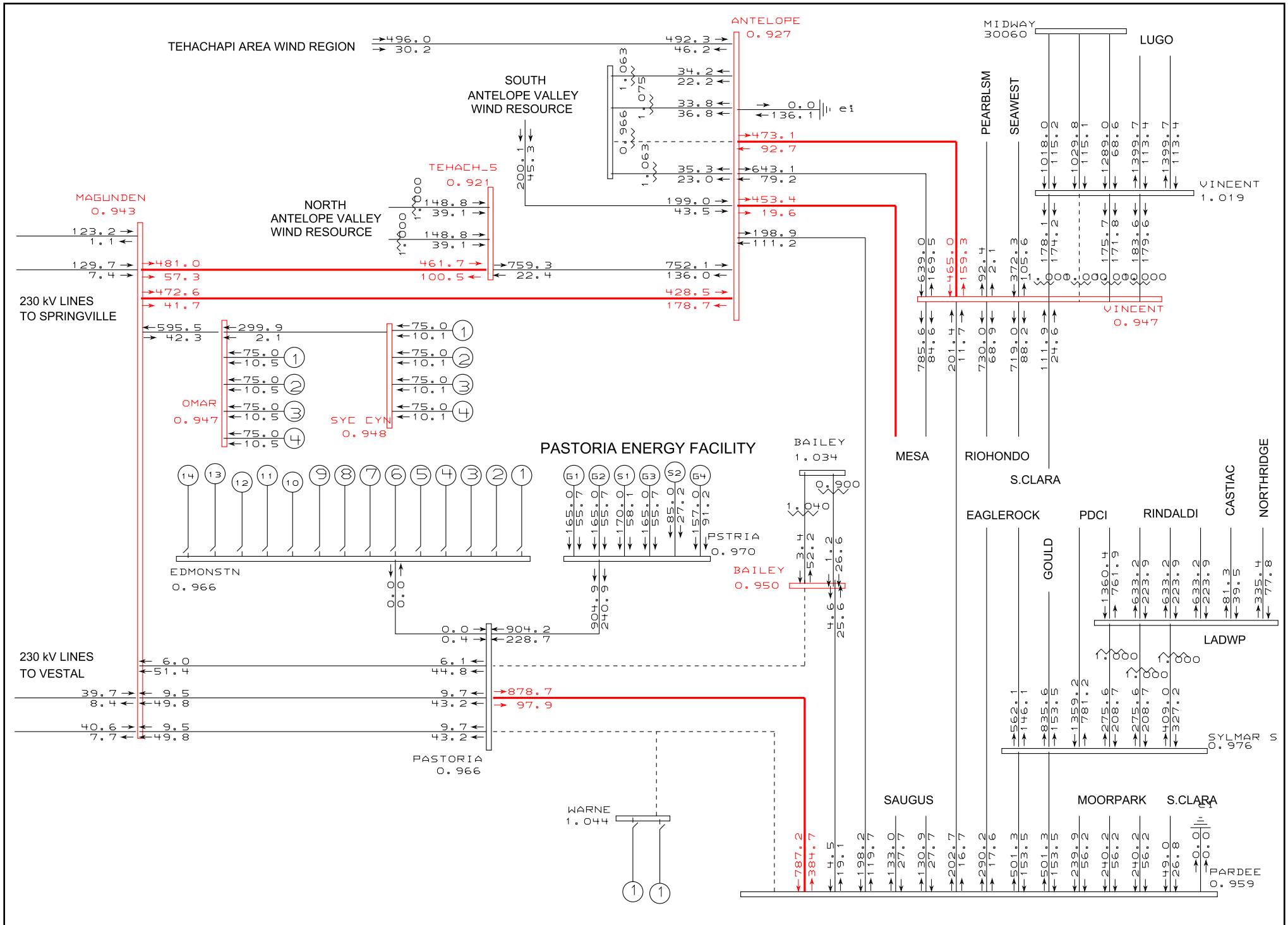

d:\projects143\pef\postpef157-fstr-lsp.sav

Fri Dec 23 12:09:52 2005

CALPINE PASTORIA ADDITION: POST PROJECT
TECHNICAL REASSESSMENT WITH ADDITIONAL UPGRADES
CASE STUDY: LIGHT SPRING LOAD CONDITIONS WITH MAXIMUM

TOPOLOGY : PROPOSED ANTELOPE TRANSMISSION PROJECT (ENERGIZED AT 230)
WIND GENERATION

PSLF Program
pef.drw
Rating =1

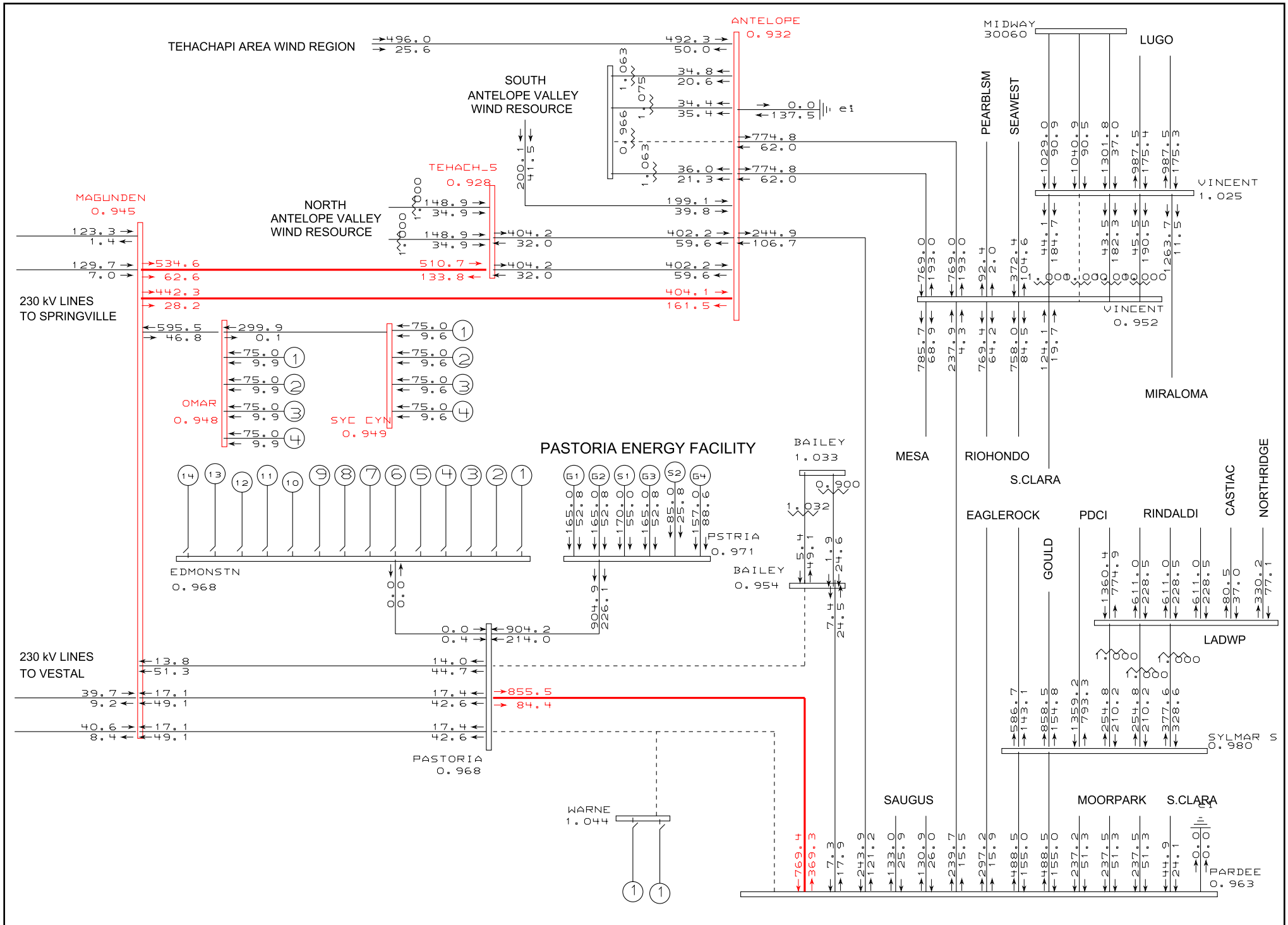

d:\projects143\pef\postpef157-fstr-lsp-up.sav

Fri Dec 23 12:07:14 2005

CALPINE PASTORIA ADDITION: POST PROJECT
TECHNICAL REASSESSMENT WITH ADDITIONAL UPGRADES
CASE STUDY: LIGHT SPRING LOAD CONDITIONS WITH MAXIMUM

TOPOLOGY : PROPOSED ANTELOPE TRANSMISSION PROJECT (ENERGIZED AT 230)
TEHACHAPI PHASE 2 INCLUDING NEW VINCENT-MIRA LOMA 500 KV IN-SERVICE
WIND GENERATION

PSLF Program
pef_up.drw
Rating =1

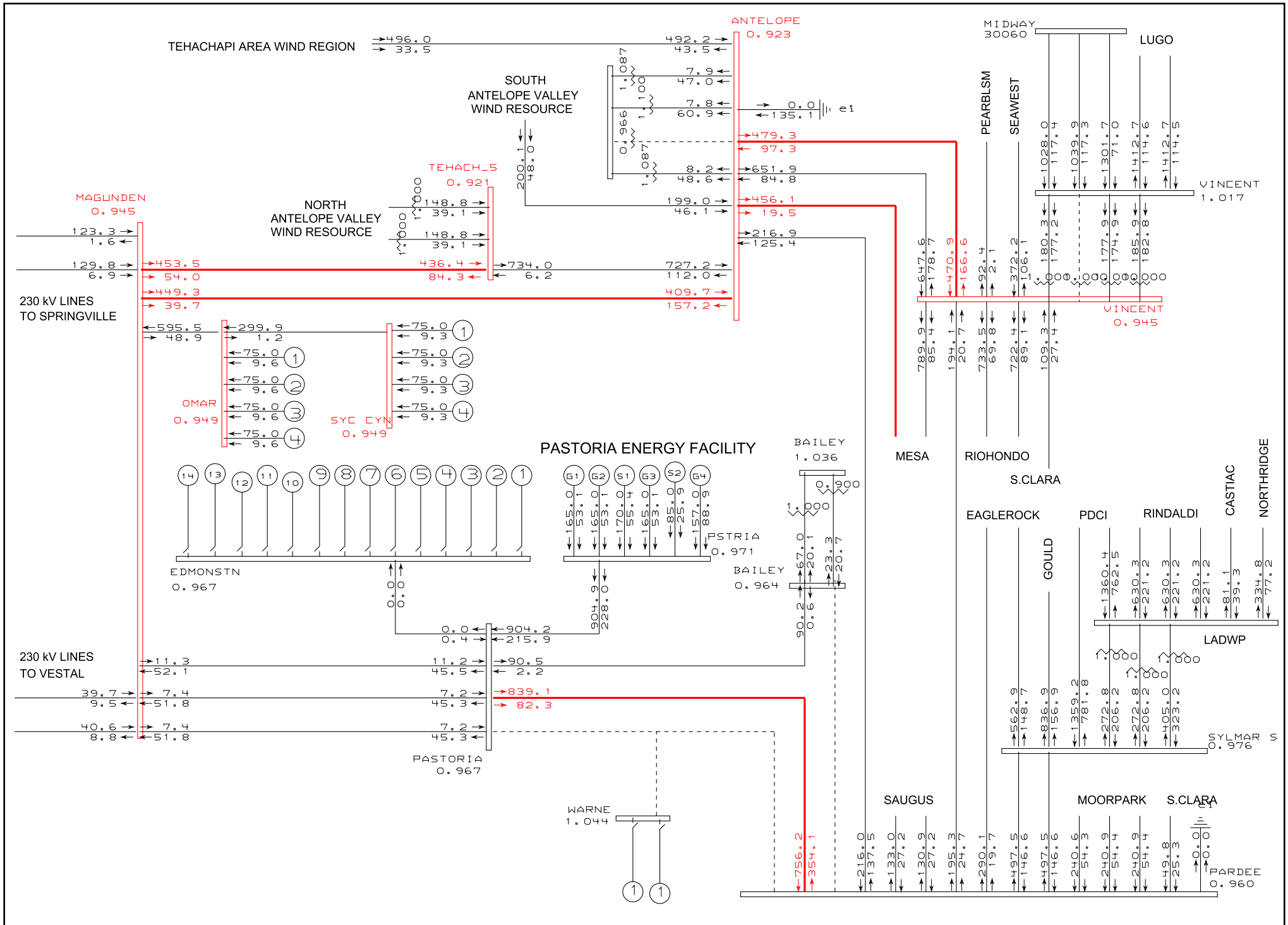

d:\projects143\pef\postpef157-fstr-lsp.sav

Fri Dec 23 12:11:11 2005

CALPINE PASTORIA ADDITION: POST PROJECT
TECHNICAL REASSESSMENT WITH ADDITIONAL UPGRADES
CASE STUDY: LIGHT SPRING LOAD CONDITIONS WITH MAXIMUM WIND GENERATION

TOPOLOGY : PROPOSED ANTELOPE TRANSMISSION PROJECT (ENERGIZED AT 230)

PSLF Program
pef.drw
Rating =1

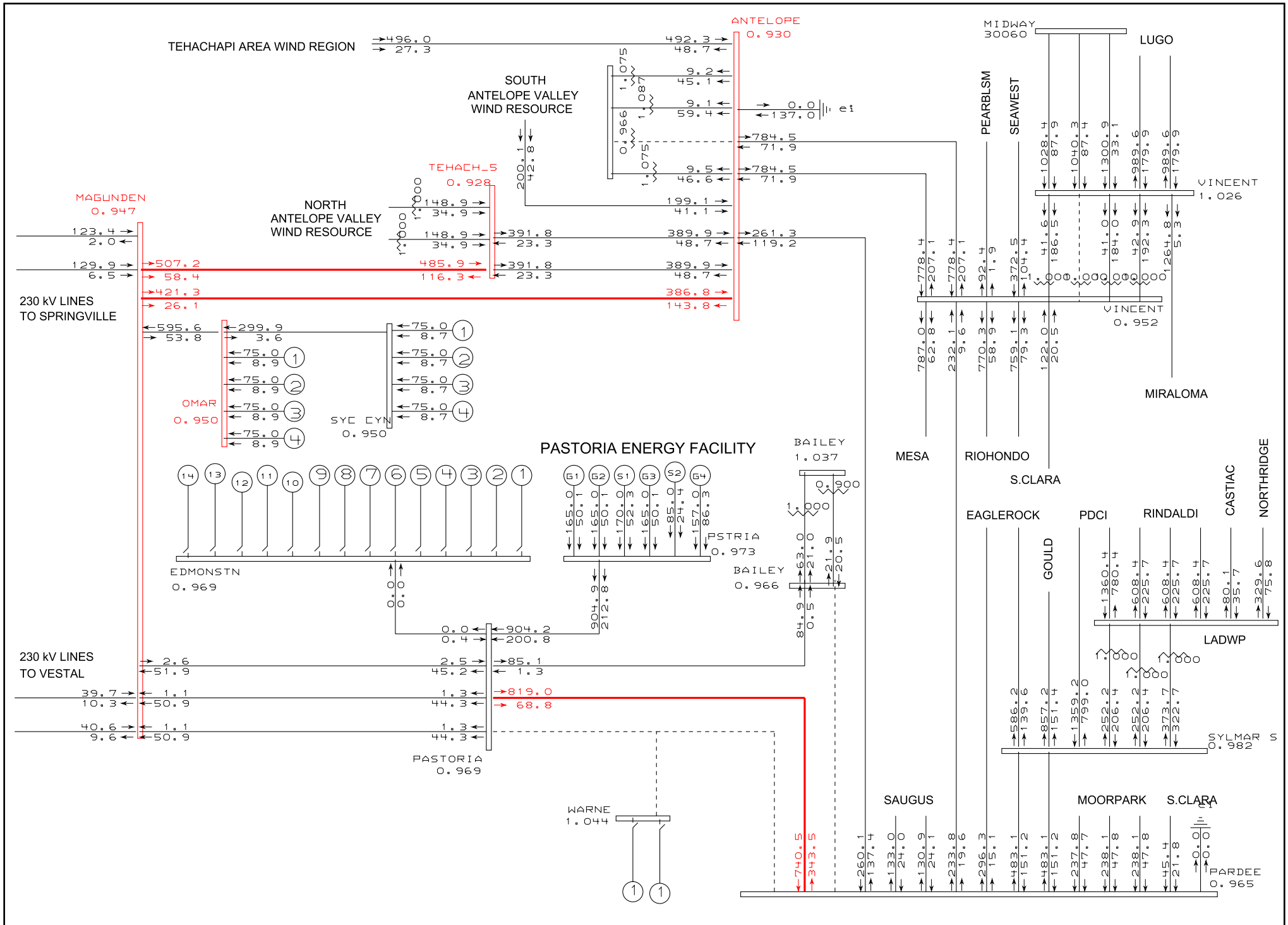

d:\projects143\pef\postpef157-fstr-lsp-up.sav

Fri Dec 23 12:22:14 2005

CALPINE PASTORIA ADDITION: POST PROJECT
TECHNICAL REASSESSMENT WITH ADDITIONAL UPGRADES
CASE STUDY: LIGHT SPRING LOAD CONDITIONS WITH MAXIMUM

TOPOLOGY : PROPOSED ANTELOPE TRANSMISSION PROJECT (ENERGIZED AT 230)
TEHACHAPI PHASE 2 INCLUDING NEW VINCENT-MIRA LOMA 500 KV IN-SERVICE
WIND GENERATION

PSLF Program
pef_up.drw
Rating =1

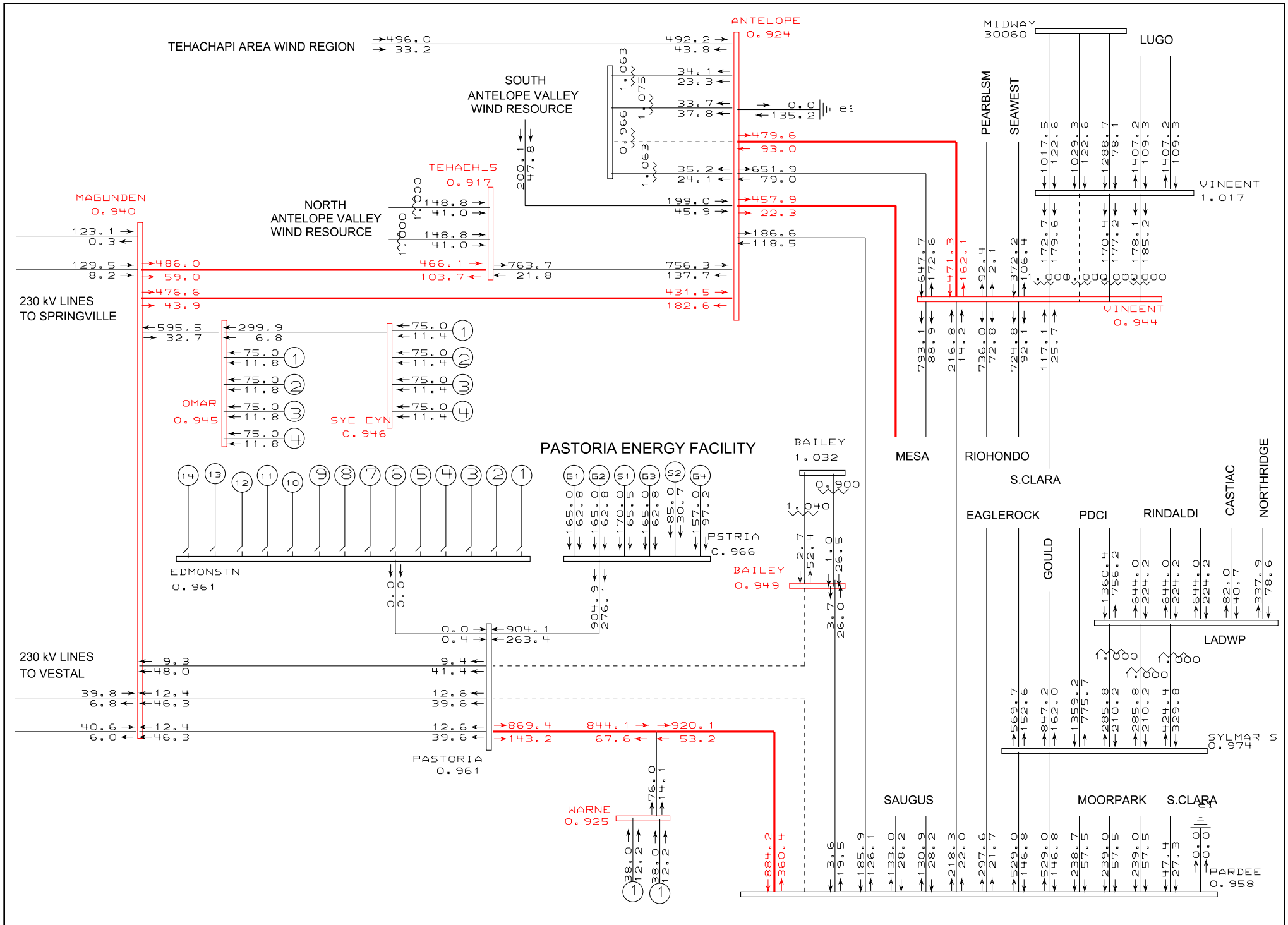

d:\projects143\pef\postpef157-fstr-lsp.sav

Fri Dec 23 12:12:25 2005

CALPINE PASTORIA ADDITION: POST PROJECT
TECHNICAL REASSESSMENT WITH ADDITIONAL UPGRADES
CASE STUDY: LIGHT SPRING LOAD CONDITIONS WITH MAXIMUM

TOPOLOGY : PROPOSED ANTELOPE TRANSMISSION PROJECT (ENERGIZED AT 230) I
WIND GENERATION

PSLF Program
pef.drw
Rating =1

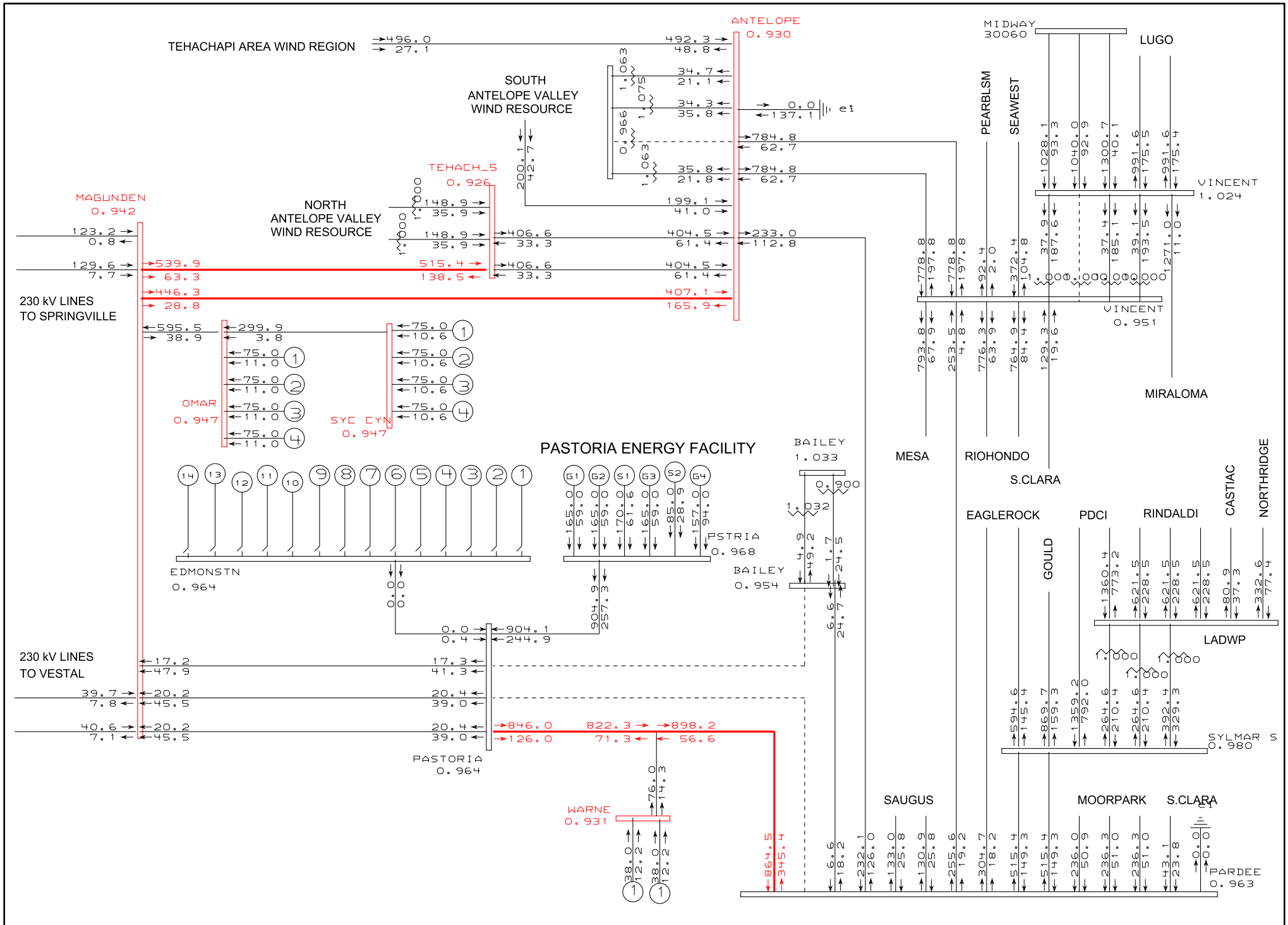

d:\projects143\pef\postpef157-fstr-lsp-up.sav

Fri Dec 23 12:32:27 2005

CALPINE PASTORIA ADDITION: POST PROJECT
TECHNICAL REASSESSMENT WITH ADDITIONAL UPGRADES
CASE STUDY: LIGHT SPRING LOAD CONDITIONS WITH MAXIMUM

TOPOLOGY : PROPOSED ANTELOPE TRANSMISSION PROJECT (ENERGIZED AT 230)
TEHACHAPI PHASE 2 INCLUDING NEW VINCENT-MIRA LOMA 500 KV IN-SERVICE
WIND GENERATION

PSLF Program
pef_up.drw
Rating =1

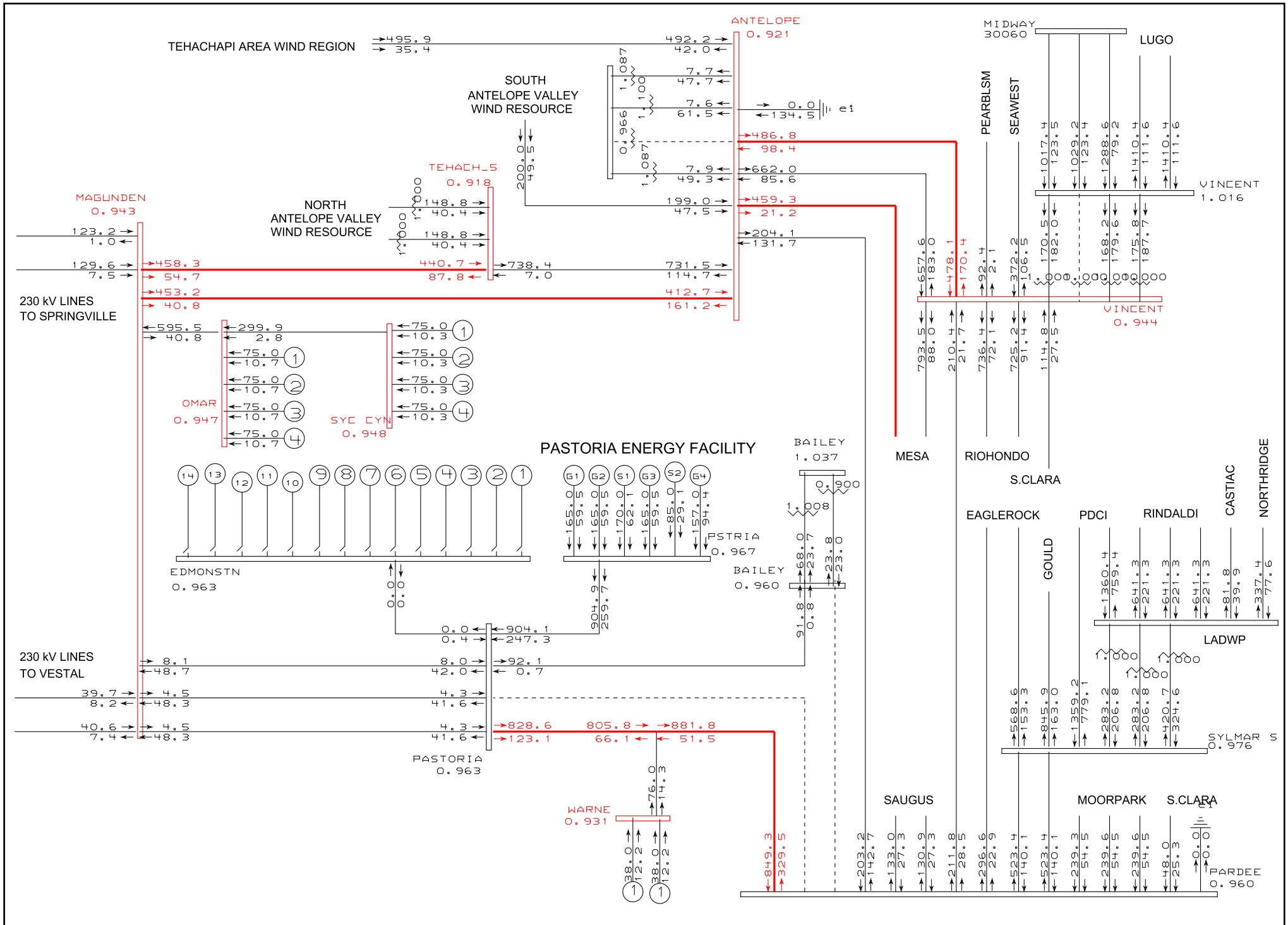

d:\projects143\pef\postpef157-fstr-lsp.sav

Fri Dec 23 12:16:11 2005

CALPINE PASTORIA ADDITION: POST PROJECT
TECHNICAL REASSESSMENT WITH ADDITIONAL UPGRADES
CASE STUDY: LIGHT SPRING LOAD CONDITIONS WITH MAXIMUM

TOPOLOGY : PROPOSED ANTELOPE TRANSMISSION PROJECT (ENERGIZED AT 230) I
WIND GENERATION

PSLF Program
pef.drw
Rating =1

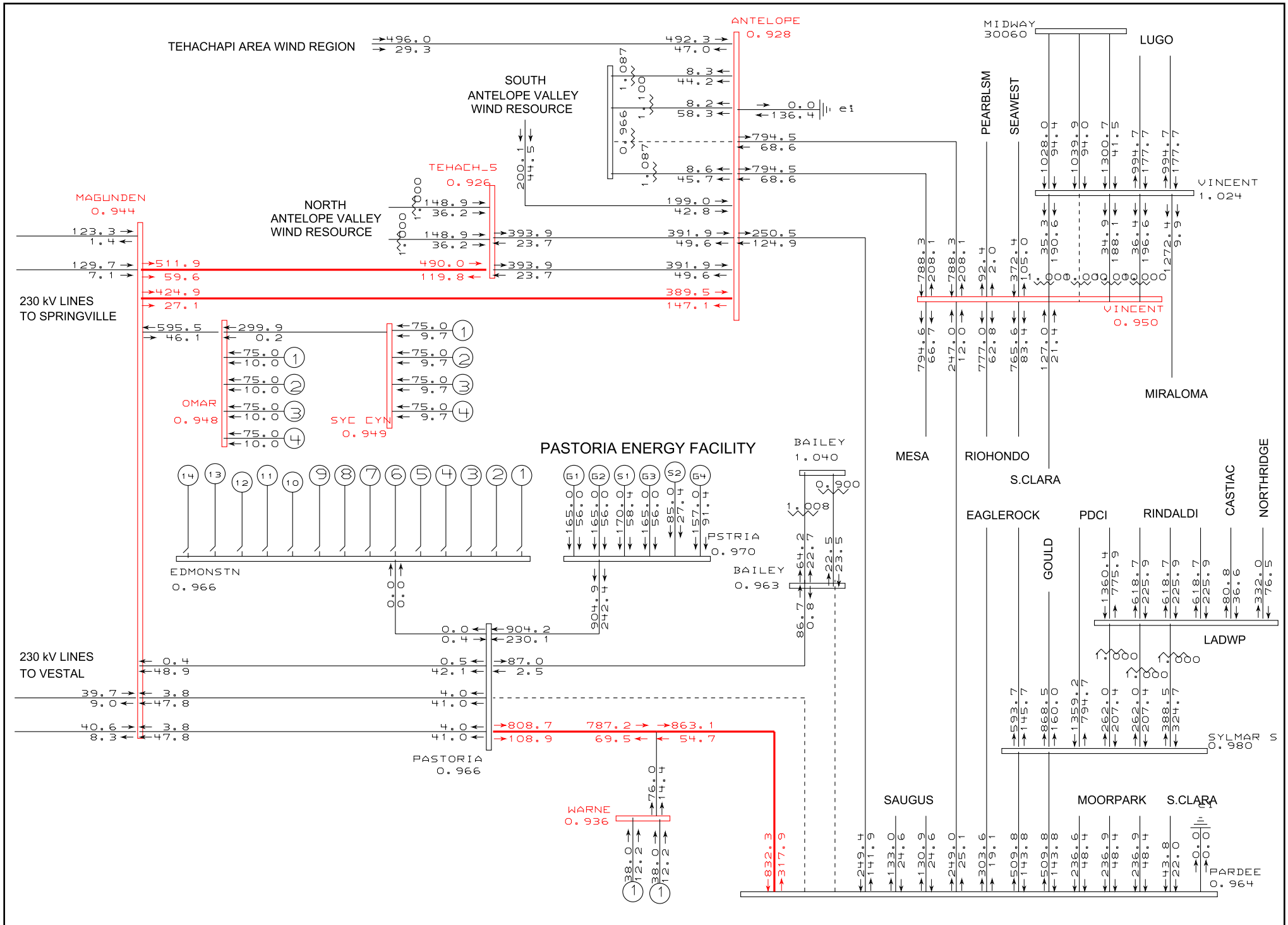

d:\projects143\pef\postpef157-fstr-lsp-up.sav

Fri Dec 23 12:31:54 2005

CALPINE PASTORIA ADDITION: POST PROJECT
TECHNICAL REASSESSMENT WITH ADDITIONAL UPGRADES
CASE STUDY: LIGHT SPRING LOAD CONDITIONS WITH MAXIMUM

TOPOLOGY : PROPOSED ANTELOPE TRANSMISSION PROJECT (ENERGIZED AT 230)
TEHACHAPI PHASE 2 INCLUDING NEW VINCENT-MIRA LOMA 500 KV IN-SERVICE
WIND GENERATION

PSLF Program
pef_up.drw
Rating =1

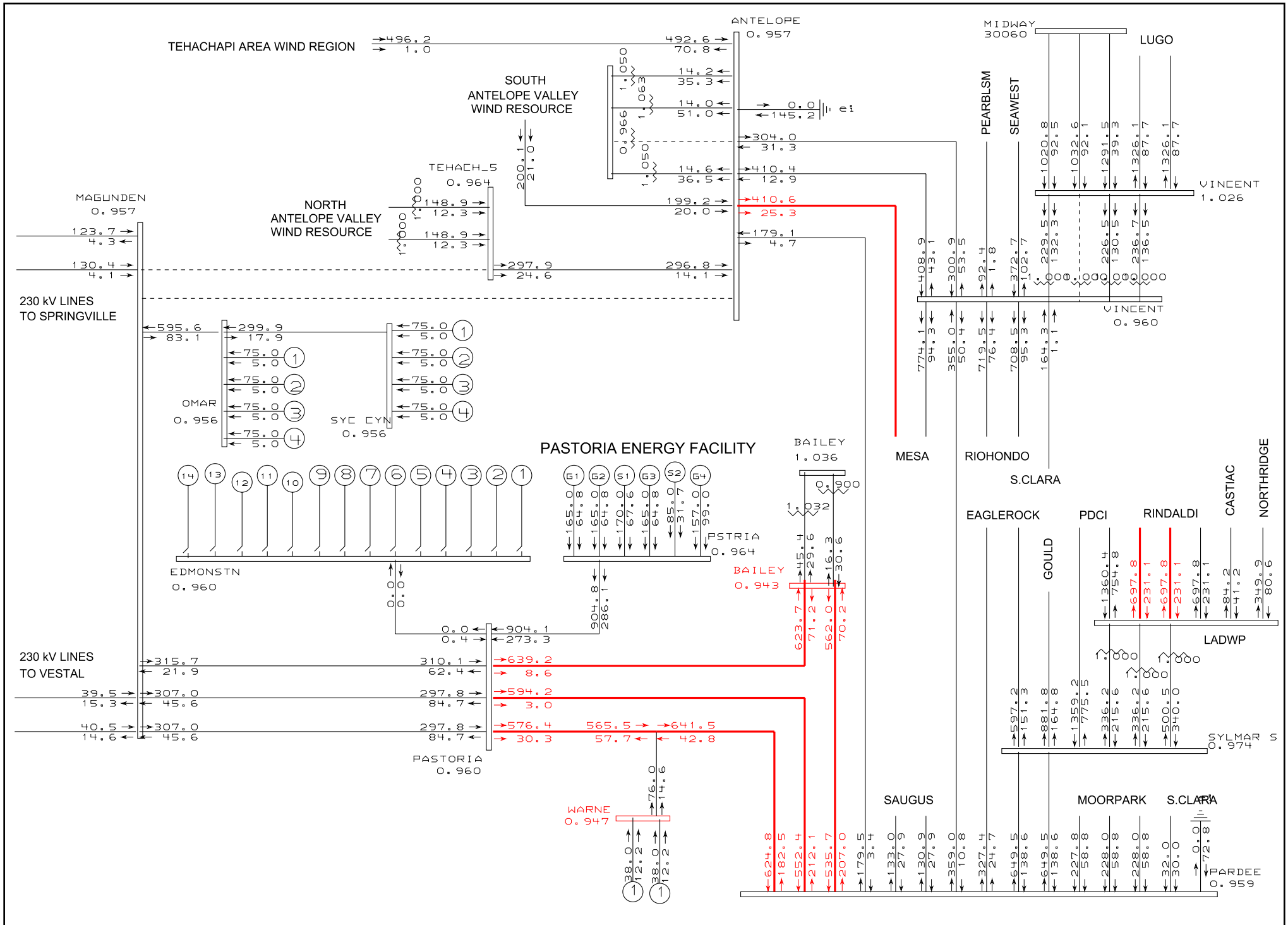

d:\projects143\pef\postpef157-fstr-lsp.sav

Fri Dec 23 12:17:12 2005

CALPINE PASTORIA ADDITION: POST PROJECT
TECHNICAL REASSESSMENT WITH ADDITIONAL UPGRADES
CASE STUDY: LIGHT SPRING LOAD CONDITIONS WITH MAXIMUM

TOPOLOGY : PROPOSED ANTELOPE TRANSMISSION PROJECT (ENERGIZED AT 230)
WIND GENERATION

PSLF Program
pef.drw
Rating =1

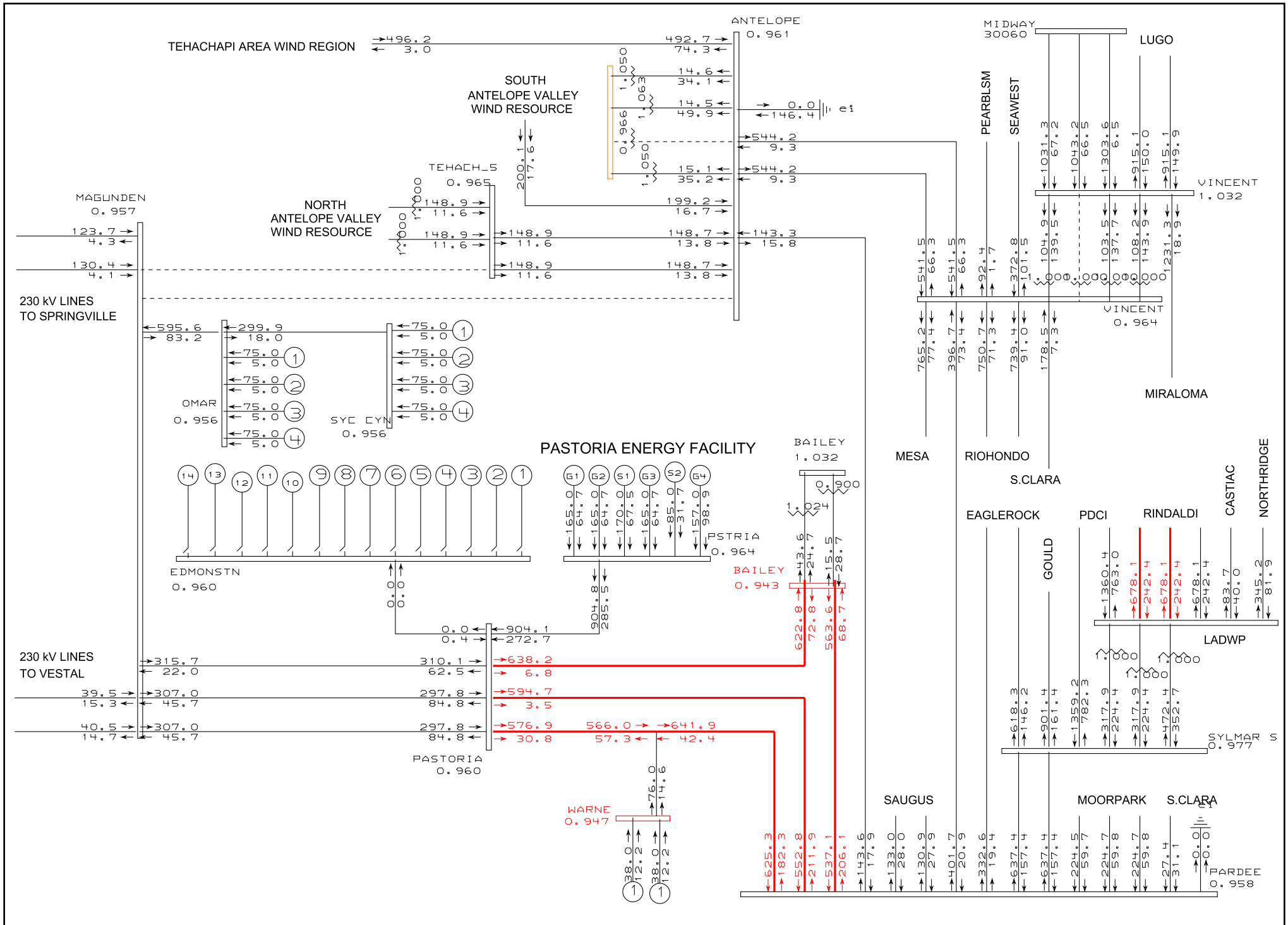

d:\projects143\pef\postpef157-fstr-lsp-up.sav

Fri Dec 23 12:33:19 2005

CALPINE PASTORIA ADDITION: POST PROJECT
TECHNICAL REASSESSMENT WITH ADDITIONAL UPGRADES
CASE STUDY: LIGHT SPRING LOAD CONDITIONS WITH MAXIMUM

TOPOLOGY : PROPOSED ANTELOPE TRANSMISSION PROJECT (ENERGIZED AT 230) I
TEHACHAPI PHASE 2 INCLUDING NEW VINCENT-MIRA LOMA 500 KV IN-SERVICE
WIND GENERATION

PSLF Program
pef_up.drw
Rating =1

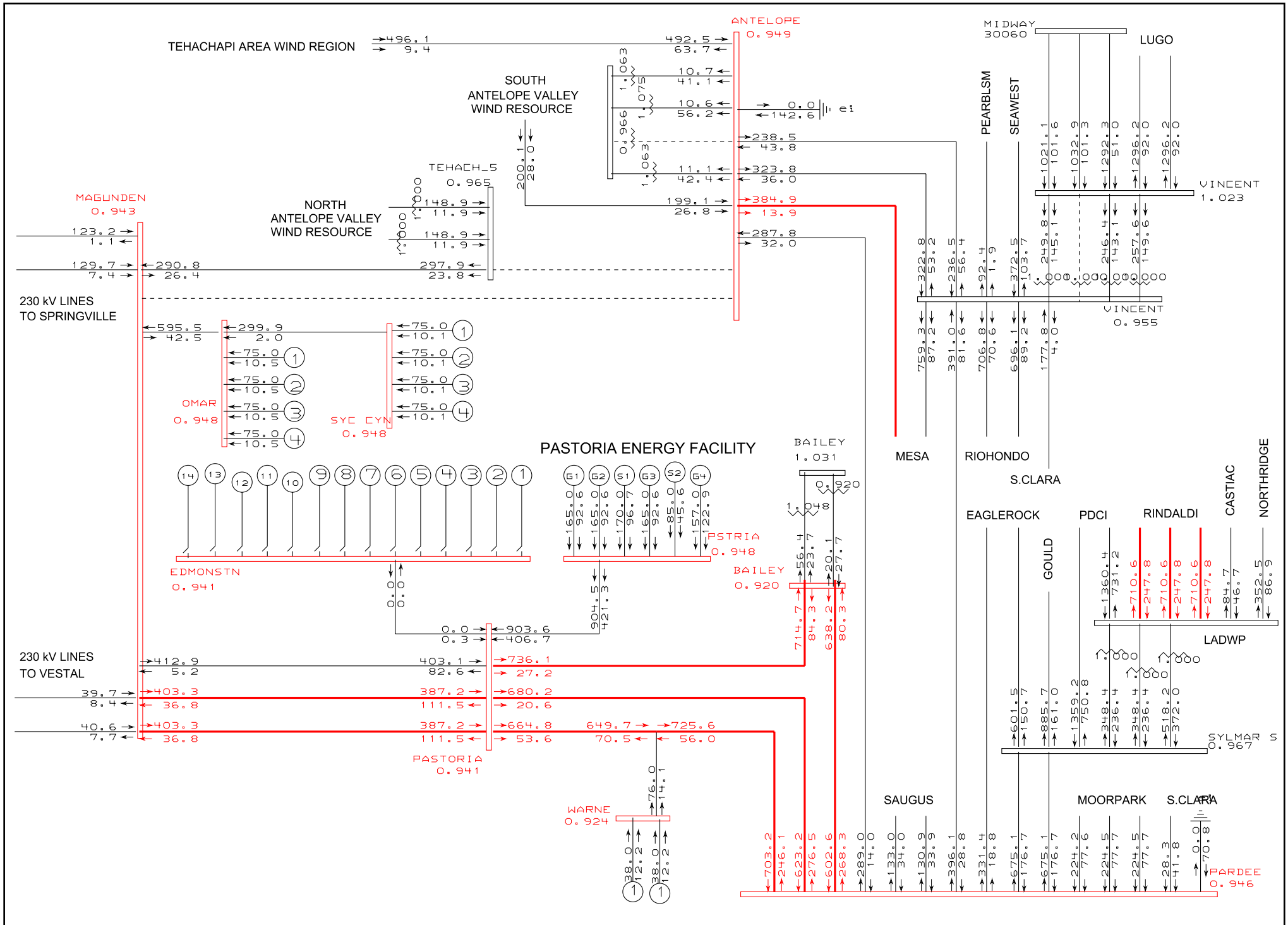

d:\projects143\pef\postpef157-fstr-lsp.sav

Fri Dec 23 12:17:52 2005

CALPINE PASTORIA ADDITION: POST PROJECT
TECHNICAL REASSESSMENT WITH ADDITIONAL UPGRADES
CASE STUDY: LIGHT SPRING LOAD CONDITIONS WITH MAXIMUM

TOPOLOGY : PROPOSED ANTELOPE TRANSMISSION PROJECT (ENERGIZED AT 230)
WIND GENERATION

PSLF Program
pef.drw
Rating =1

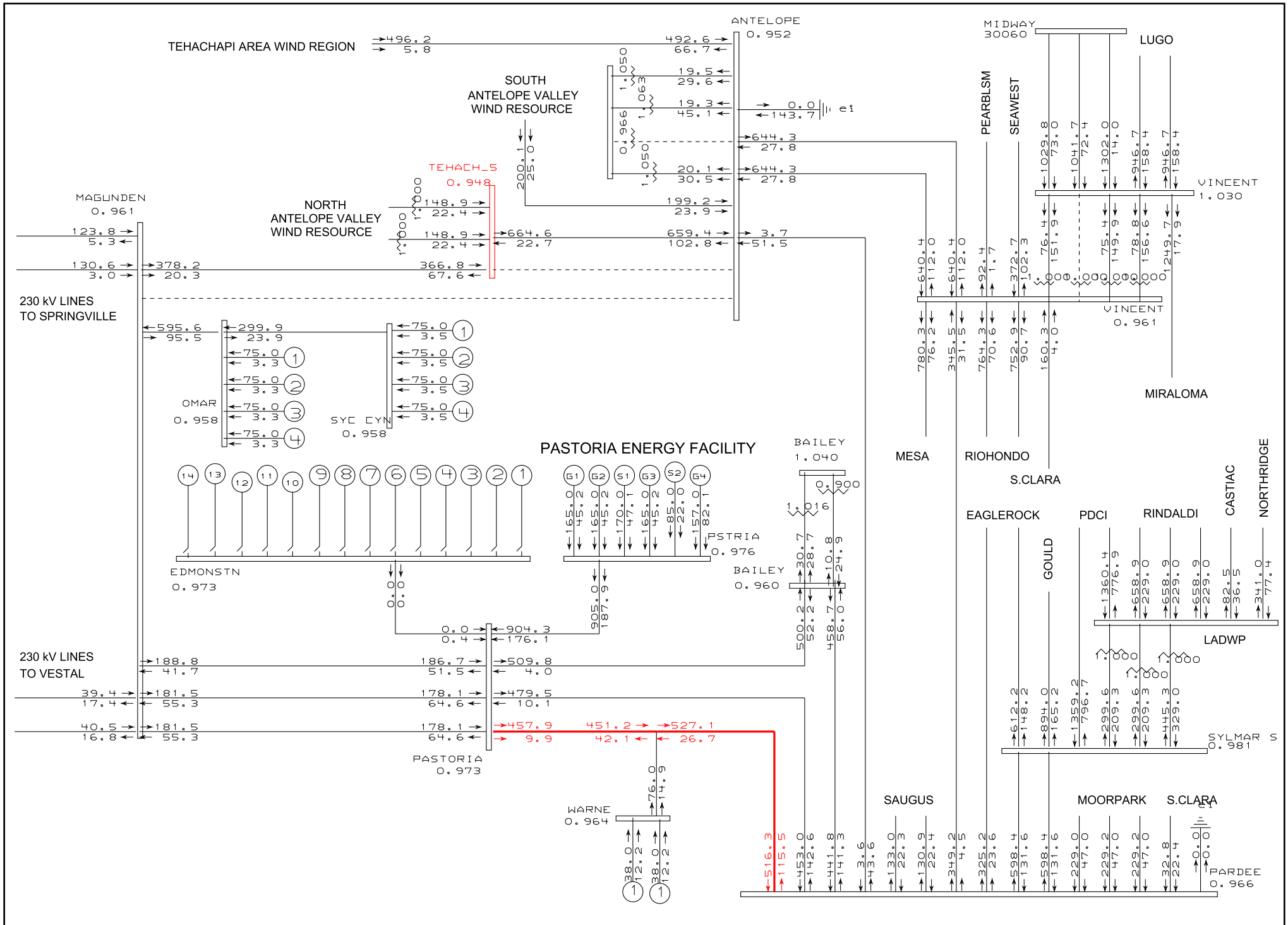

d:\projects143\pef\postpef157-fstr-lsp-up.sav

Fri Dec 23 12:34:10 2005

CALPINE PASTORIA ADDITION: POST PROJECT
TECHNICAL REASSESSMENT WITH ADDITIONAL UPGRADES
CASE STUDY: LIGHT SPRING LOAD CONDITIONS WITH MAXIMUM

TOPOLOGY : PROPOSED ANTELOPE TRANSMISSION PROJECT (ENERGIZED AT 230) I
TEHACHAPI PHASE 2 INCLUDING NEW VINCENT-MIRA LOMA 500 KV IN-SERVICE
WIND GENERATION

PSLF Program
pef_up.drw
Rating =1

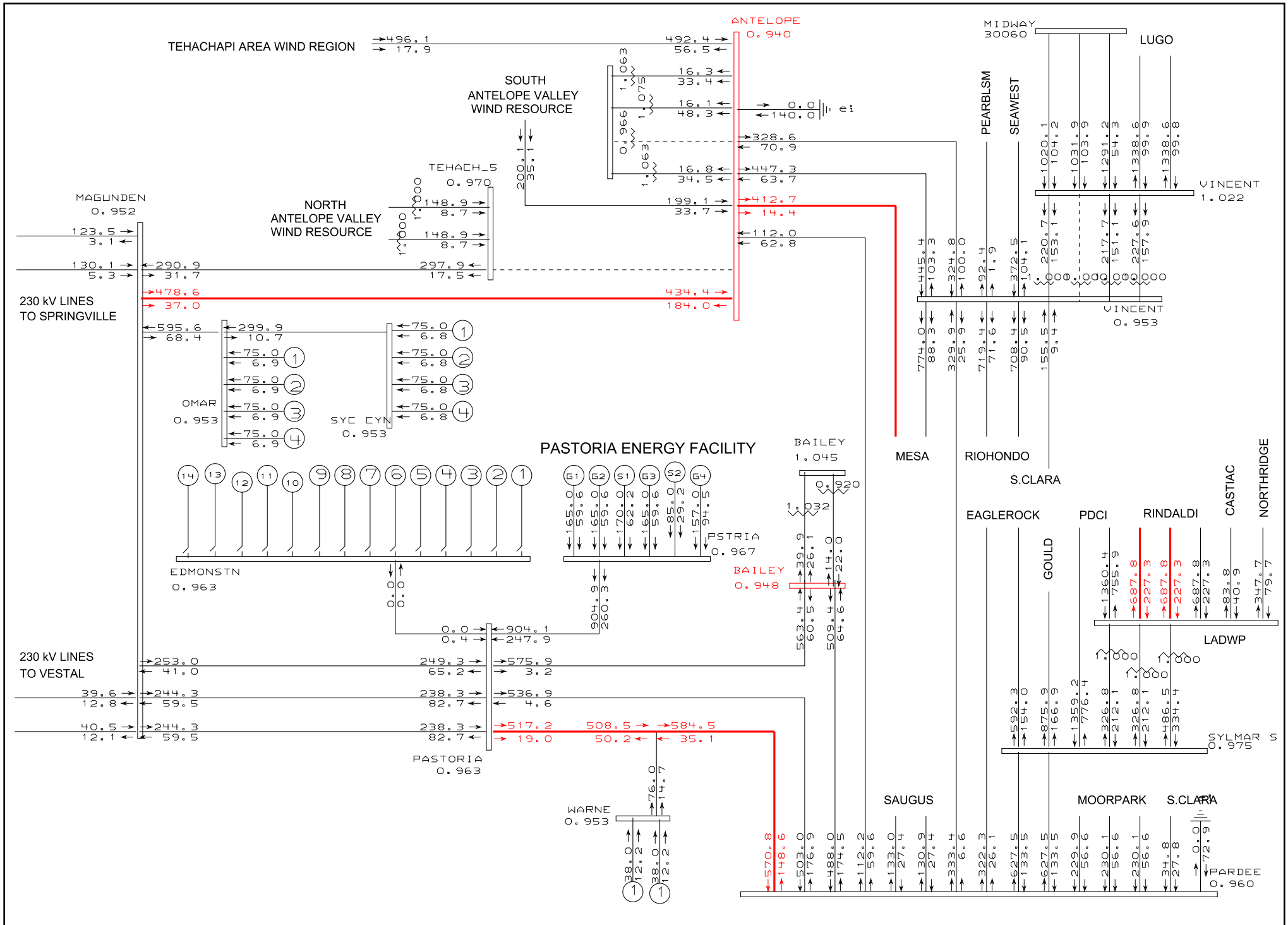

d:\projects143\pef\postpef157-fstr-lsp.sav

Fri Dec 23 12:18:27 2005

CALPINE PASTORIA ADDITION: POST PROJECT
TECHNICAL REASSESSMENT WITH ADDITIONAL UPGRADES
CASE STUDY: LIGHT SPRING LOAD CONDITIONS WITH MAXIMUM

TOPOLOGY : PROPOSED ANTELOPE TRANSMISSION PROJECT (ENERGIZED AT 230) I
WIND GENERATION

PSLF Program
pef.drw
Rating =1

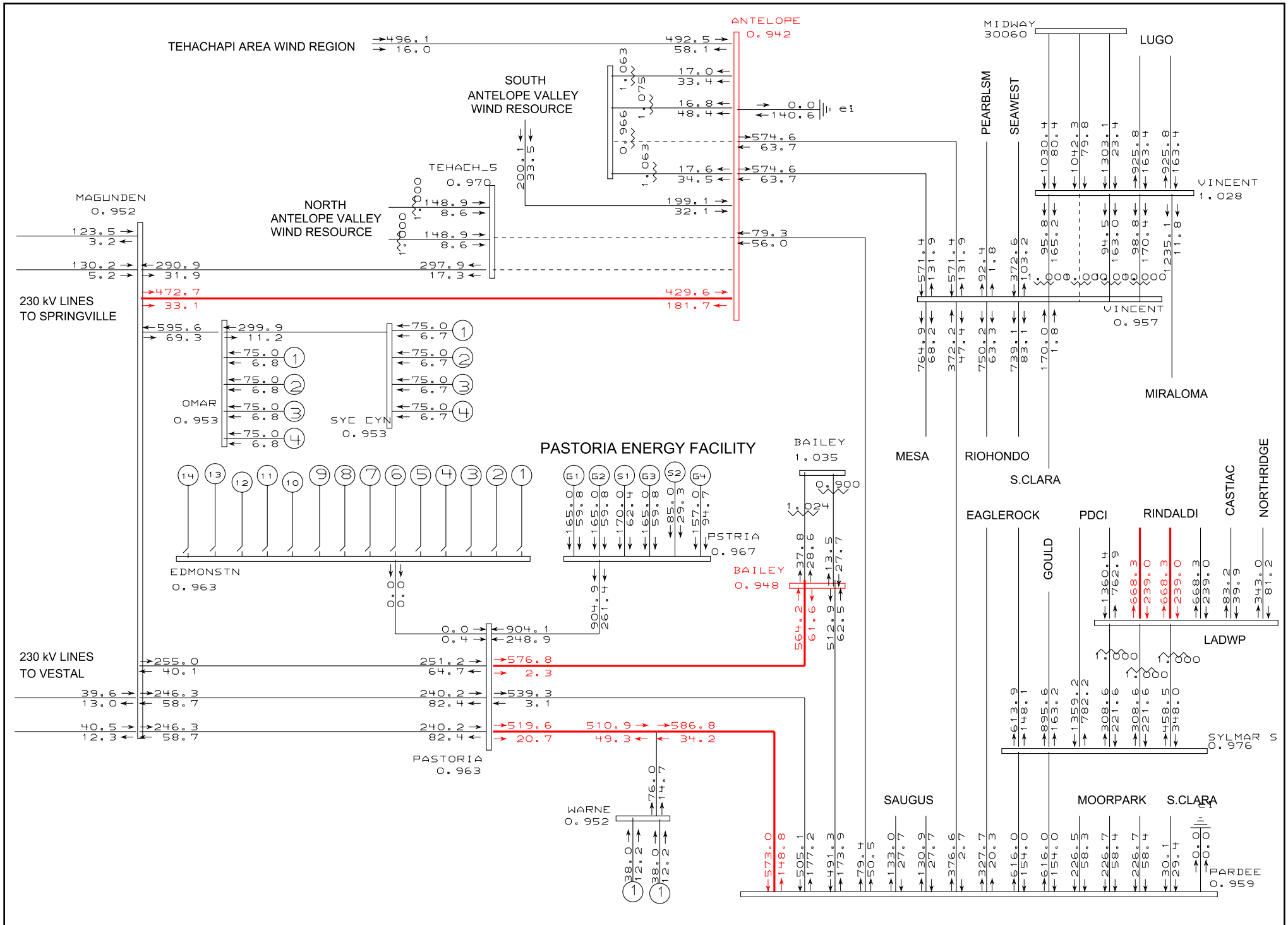

d:\projects143\pef\postpef157-fstr-lsp-up.sav

Fri Dec 23 12:34:40 2005

CALPINE PASTORIA ADDITION: POST PROJECT
TECHNICAL REASSESSMENT WITH ADDITIONAL UPGRADES
CASE STUDY: LIGHT SPRING LOAD CONDITIONS WITH MAXIMUM

TOPOLOGY : PROPOSED ANTELOPE TRANSMISSION PROJECT (ENERGIZED AT 230)
TEHACHAPI PHASE 2 INCLUDING NEW VINCENT-MIRA LOMA 500 KV IN-SERVICE
WIND GENERATION

PSLF Program
pef_up.drw
Rating =1

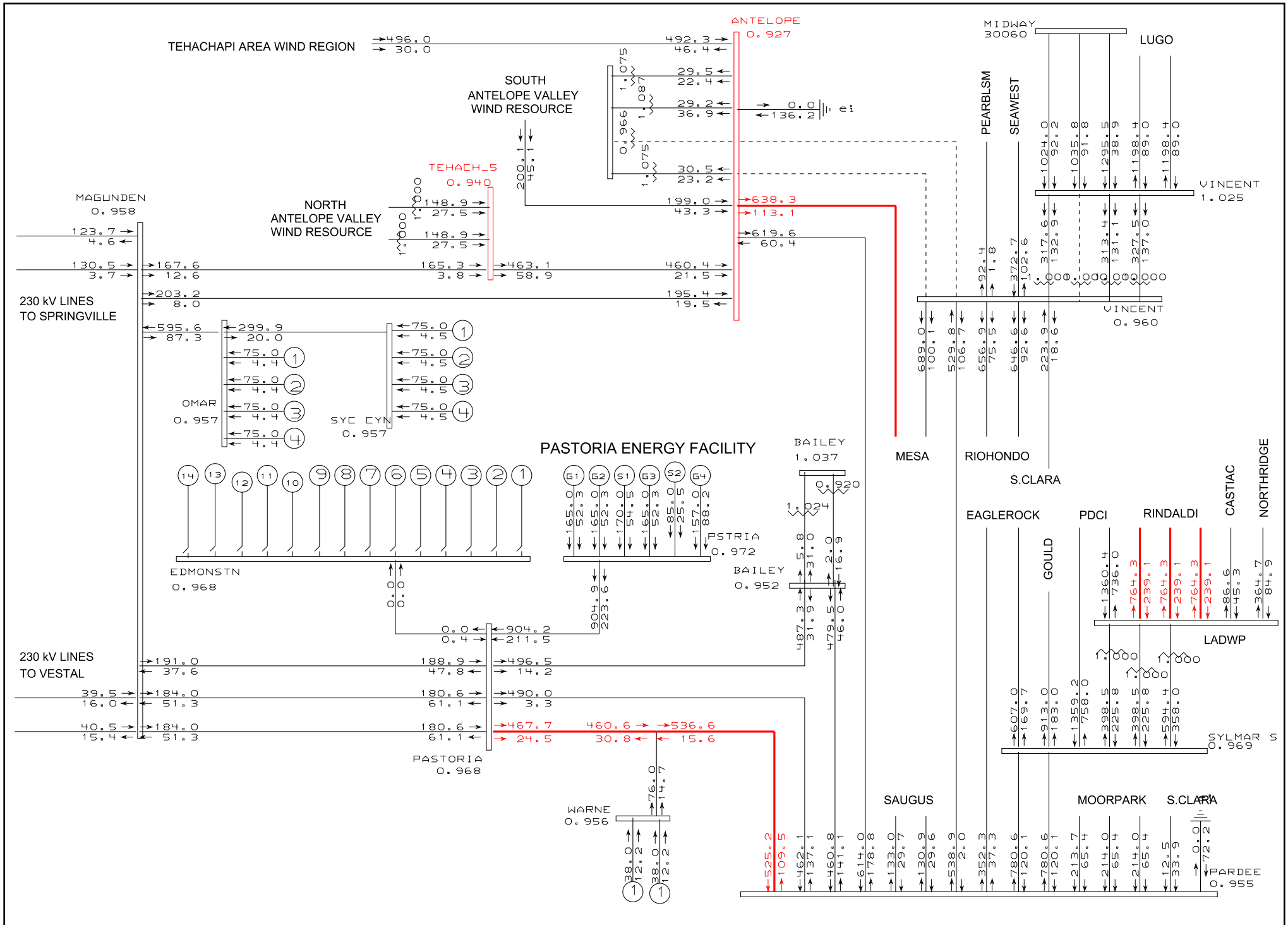

d:\projects143\pef\postpef157-fstr-lsp.sav

Fri Dec 23 12:36:21 2005

CALPINE PASTORIA ADDITION: POST PROJECT
TECHNICAL REASSESSMENT WITH ADDITIONAL UPGRADES
CASE STUDY: LIGHT SPRING LOAD CONDITIONS WITH MAXIMUM WIND GENERATION

TOPOLOGY : PROPOSED ANTELOPE TRANSMISSION PROJECT (ENERGIZED AT 230)

PSLF Program
pef.drw
Rating =1

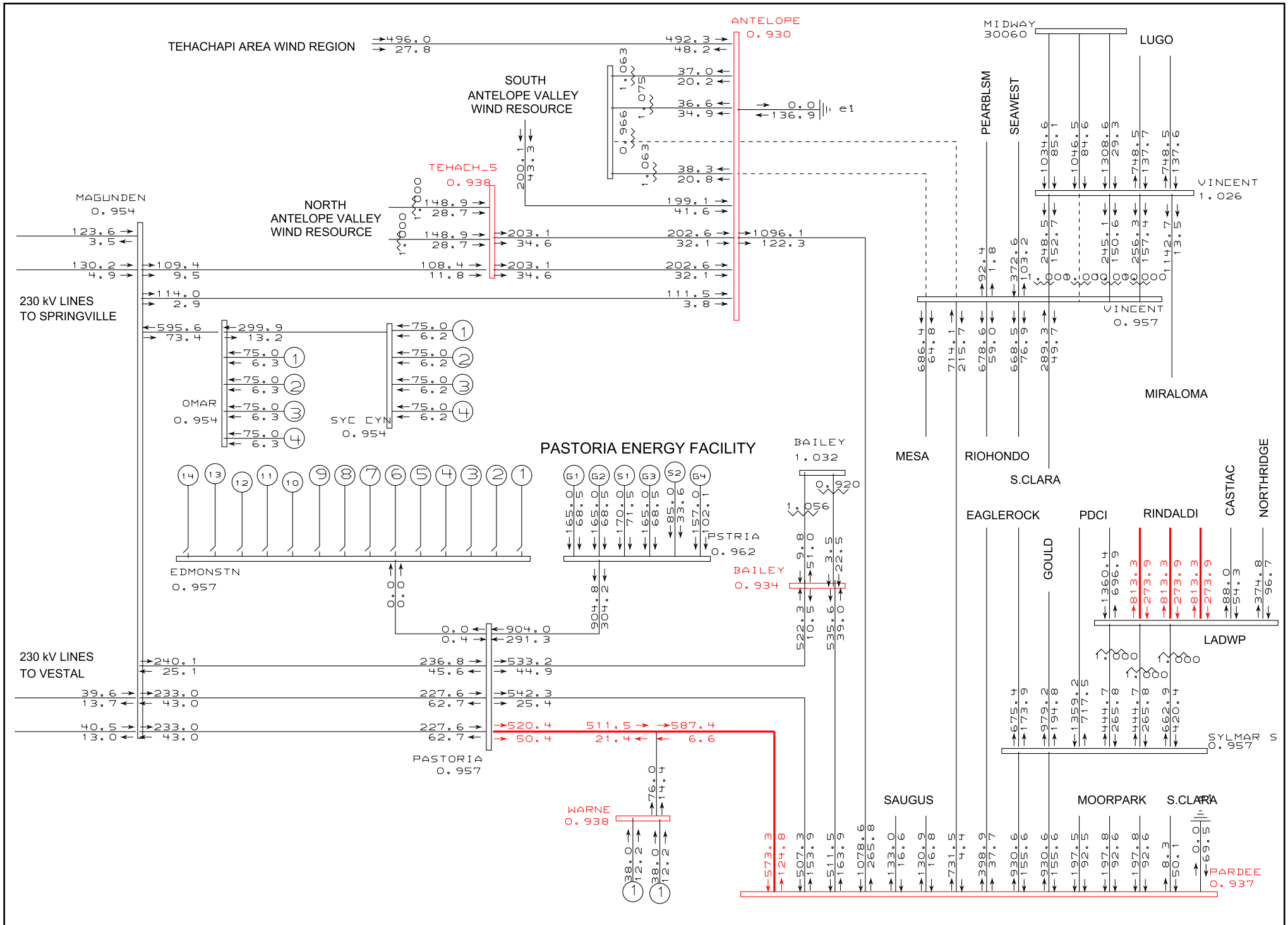

d:\projects143\pef\postpef157-fstr-lsp-up.sav

Fri Dec 23 12:35:22 2005

CALPINE PASTORIA ADDITION: POST PROJECT
TECHNICAL REASSESSMENT WITH ADDITIONAL UPGRADES
CASE STUDY: LIGHT SPRING LOAD CONDITIONS WITH MAXIMUM

TOPOLOGY : PROPOSED ANTELOPE TRANSMISSION PROJECT (ENERGIZED AT 230)
TEHACHAPI PHASE 2 INCLUDING NEW VINCENT-MIRA LOMA 500 KV IN-SERVICE
WIND GENERATION

PSLF Program
pef_up.drw
Rating =1