CALPINE®

4160 DUBLIN BOULEVARD, SUITE 150
DUBLIN, CALIFORNIA 94568-3139
925.479.6600 (MAIN) T# 31582
925.479.7300 (FAX)

June 10, 2005

DOCKET
05-AFC-1
DATE JUN 10 2005
RECD. JUN 13 2005

Dockets Office
Attn: Dr. James W. Reede, Jr.
California Energy Commission
1516 Ninth Street
Sacramento, CA 95814-5512

RE: 05-AFC-1 Pastoria Energy Facility 160 MW Expansion Supplement to 05-AFC-1

Dear Dockets Office staff:

This submittal is intended to accompany the Data Adequacy Response package (Supplement to 05-AFC-1). This transmittal includes:

- 7 hard copies and 3 CD copies of the Cover Letter and the System Impact Study for the Pastoria Energy Facility, LLC

If you have any questions regarding the materials submitted, please feel free to contact Andrew Whittome at (925) 479-6789.

Sincerely,

Marrianna

Marrianna Isaacs, Project Administrator
Calpine Corporation

PASTORIA ENERGY FACILITY, LLC
PASTORIA ADDITION

SYSTEM IMPACT STUDY

May 13, 2005

SOUTHERN CALIFORNIA
EDISON
An *EDISON INTERNATIONAL*℠ Company

Prepared by

Jorge Chacon

Southern California Edison Company

EXECUTIVE SUMMARY

Pastoria Energy Facility (PEF) applied to the California Independent System Operator (CAISO) for Interconnection pursuant to Section 5.7 of the CAISO Tariff. Southern California Edison Company (SCE) performed a System Impact Study, as requested, for additional generation installation to the recently constructed Pastoria Energy Facility. The additional generation installation consists of a new gas fired generator with a net output of 157 MW (PEF Addition). The evaluations included study conditions with all generation projects in queue ahead of the Pastoria Addition.

The purpose of the System Impact Study is to determine the adequacy of SCE's transmission system to accommodate all or part of the requested capacity. This study identified that facility upgrades are necessary to mitigate thermal overload problems identified under base case, single outage, and double outage conditions. The results of the System Impact Study will be used to determine project cost allocation for facility upgrades. The study accuracy and the results from the assessment of the system adequacy are contingent on the accuracy of the technical data provided by the customer as shown in Figure 1 and Appendix H. Any changes to the attached data could invalidate the study results and may require reassessment.

The study includes power flow (steady-state and post-transient), transient stability and short-circuit duty analysis. The study was performed for two system conditions: (a) 2006 heavy summer load forecast (once-in-ten-year heat wave assumption) with very high internal northern area generation and high Midway-Vincent (Path 26) flow, and (b) 2007 spring load forecast (65% of 2006 heavy summer) with very high Big Creek Corridor generation and two Ventura area generation dispatch sensitivities in order to stress the Pardee and Antelope legs of the Big Creek Corridor. The following sections include discussion and study results of the System Impact Study for the PEF Addition.

LOAD FLOW RESULTS

The study identified base case overload problems on the Antelope-Mesa 230 kV T/L, Antelope-Cottonwind 230 kV T/L, and Pardee-Pastoria-Warne 230 kV T/L triggered by a project(s) in queue ahead of the PEF Addition. Under heavy summer conditions with the PEF Addition, loading on the Antelope-Mesa 230 kV T/L and Antelope-Cottonwind 230 kV T/L were found to be 115% and 102% respectively. Under light spring conditions with the PEF Addition, loading on the Antelope-Mesa 230 kV T/L, Antelope-Cottonwind 230 kV T/L, and Pardee-Pastoria-Warne 230 kV T/L were found to be 114%, 112% and 110% respectively.

In addition, the study identified a total of eight single contingencies under heavy summer conditions and nine single contingencies under light spring conditions which resulted in thermal overload problems on transmission facilities in the Big Creek Corridor south of the SCE Magunden 230 kV substation. Under heavy summer conditions with the PEF Addition, five different 230 kV transmission lines were found to be impacted with loadings ranging from 109% to 123%. Under light spring conditions with the PEF

Addition, eight different 230 kV transmission lines were found to be impacted with loadings ranging from 108% to 148%.

Lastly, the study identified a total of fourteen double contingencies under heavy summer conditions and thirteen double contingencies under light spring conditions which resulted in thermal overload problems on transmission facilities in the Big Creek Corridor south of the SCE Magunden 230 kV substation or case non-convergence. Under heavy summer conditions with the PEF Addition, ten different 230 kV transmission lines were found to be impacted with loadings ranging from 102% to 187%. Under light spring conditions with the PEF Addition, nine different 230 kV transmission lines were found to be impacted with loadings ranging from 106% to 230%.

TRANSIENT STABILITY RESULTS

Transient stability studies determined that the system remained stable under both single and double contingency outage conditions with the existing Big Creek and Pastoria Energy Facility Special Protection Schemes (SPS). As a result, the need for the PEF Addition to participate in an SPS requires the entire PEF Addition to be tripped to mitigate the incremental contribution to thermal overload problems identified in this study.

Transient stability studies did not identify a violation of the recently WECC approved Generator Electric Grid Fault Ride-Through Capability Criteria.

SHORT-CIRCUIT DUTY RESULTS

Breakers at the following seven locations should be evaluated by SCE T/S Engineering to determine need for breaker replacement: Lugo 500 kV, Mammoth 230 kV, Magunden 230 kV, Pardee 230 kV, Pastoria 230 kV, Sylmar 230 kV, and Vincent 230 kV.

SPECIAL PROTECTION SCHEME REQUIREMENT

Due to SPS design limitations, the potential for system instability and gross thermal overloads identified under loss of two transmission facilities (N-2) in the Big Creek Corridor south of the Magunden Substation are currently mitigated by tripping the entire 750 MW Pastoria Energy Facility regardless of flow levels. This could result in a maximum potential generation trip of approximately 1,150 MW which corresponds to the sum total of the 750 MW Pastoria Energy Facility and the corresponding Big Creek Hydro Generation trip. In addition, all projects in queue ahead of the PEF Addition who contribute to the identified thermal overloads will need to participate in an SPS to mitigate their corresponding incremental loading contributions. As a result, the total amount of generation tripping potential under double outage contingencies with the inclusion of all queued projects could potentially increase in excess of 2,300 MW.

With the addition of new transmission facilities south of Antelope, Phase 1 and Phase 2 of the Antelope Transmission Project, the total amount of generation tripping could be

reduced down to approximately 1,700 MW which is still in excess of the 1,400 MW CAISO Spinning Reserve limit. As such, SCE will require CAISO Operational approval to exceed the currently established 1,400 MW N-2 generation tripping limit if use of an SPS for the PEF Addition is to be considered. Arming studies necessary to support the SPS design and approval by the WECC RAS Task Force will determine the exact amount of generation tripping requirements once they are completed. However, due to design limitations, the PEF Addition may require complete redesign of the recently installed PEF SPS.

LIMITED OPERATION STUDIES

The proposed in-service date for the PEF Addition is earlier than a number of generation and transmission projects ahead in queue. Due to system limitations, the PEF Addition will not be allowed to generate prior to these upgrades being in service without additional studies. Operational studies will be necessary to identify if the PEF Addition can be placed in-service on a temporary basis, under limited condition (output and period), prior to constructing the currently planned transmission upgrades, except for the Pastoria-Pardee Reconductor Project, and any new transmission upgrades identified for this project during the Facilities Study. The operation of the PEF Addition prior to the in-service date of the transmission projects identified in the Facilities Study will be subject to CAISO approval.

FACILITY STUDY

A **Facilities Study** will be required to determine the facilities and upgrades necessary to interconnect the proposed PEF Addition. The study should:

1. Investigate feasibility and develop cost associated with upgrading the existing Pastoria-Pardee-Warne 230 kV T/L. Thermal base case overload on this transmission line was triggered by a project in queue ahead of the PEF Addition. Prior to the inclusion of the PEF Addition, the overload was found to be marginal and therefore upgrade was not recommended. The transmission upgrade that should be evaluated is the reconductoring with new ACSS/TW class conductor such as a 1334.6 ACSS/TW or other conductor with mechanical properties similar to the existing 1033 ACSR in order to avoid tear-down of existing tower infrastructure.

2. If reconductor with new ACSS/TW class conductor is not feasible, develop cost associated with the complete tear-down and rebuild of the Pastoria-Pardee-Warne 230 kV T/L with bundled 1590 ACSR conductor.

3. For loss of two transmission lines in the Big Creek Corridor south of Magunden, investigate with the CAISO the possibility of tripping generation in excess of the current 1,400 MW limit.

4. If the CAISO does not allow tripping in excess of the current 1,400 MW N-2 Spinning Reserve limit, investigate feasibility and develop costs associated with a new 230 kV T/L from Pastoria to Pardee.

5. Perform Technical Assessments with the following upgrades modeled in the case in order to determine if sufficient capacity is made available with the upgrades in place:

   a. Upgrade to the existing Antelope-Mesa 230 kV T/L. This transmission upgrade was identified in a System Impact Study performed for a project in queue ahead of the PEF Addition. The project upgraded should involve complete tear-down and rebuild with

      i. 500 kV single-circuit construction standards between the SCE Antelope and SCE Rio Hondo substations

      ii. 230 kV double-circuit construction standards with a single bundled 1590 ACSR conductor between the SCE Rio Hondo and SCE Mesa 230 kV substations

   b. Upgrade the existing section of the Antelope-Magunden No.2 230 kV T/L south of the newly proposed Cottonwind 230 kV substation. This transmission upgrade was identified in a System Impact Study performed for a project in queue ahead of the PEF Addition. The project upgraded should involve complete tear-down and rebuild with bundled 1590 ACSR conductor.

   c. Upgrade to the existing Pardee-Pastoria-Warne 230 kV T/L with 1334.6 ACSS/TW.

   d. Path 26 dispatch at 3,700 MW consistent with May 2, 2005 upgraded Path Rating.

6. If the initial technical studies determine that operating the new 500 kV facilities at 230 kV is insufficient, then perform additional studies to reevaluate system operating 500 kV facilities at 500 kV.

7. Determine if a Special Protection Scheme can be utilized to mitigate any remaining single and double contingency overloads.

   a. If a special protection scheme is feasible, develop appropriate remedial action scheme, identify necessary protection requirements and develop cost.

   b. If a special protection scheme is found to be infeasible, identify additional transmission upgrades necessary to mitigate any remaining impacts and develop cost.

8. Evaluate circuit breakers at the seven locations identified in Table 5 and develop costs for any breaker replacements as applicable.

9. Reevaluate single-phase-to-ground and three-phase-to-ground short-circuit duty including transmission upgrades listed in Item 5, review any additional substation locations, and develop cost.

TABLE OF CONTENTS

I. INTRODUCTION 1

II. STUDY CONDITIONS AND ASSUMPTIONS 2

A. Planning Criteria 2
B. Pastoria Energy Facility Addition 4
C. Currently Planned Transmission Project 6
D. System Conditions 7
E. Big Creek Remedial Action Scheme 7
F. New PEF Special Protection Schemes 8
G. Power Flow Study 9
H. Transient Stability Study 11
I. Short-Circuit Duty Study 12

III. GENERATOR ELECTRIC GRID FAULT RIDE-THROUGH CAPABILITY CRITERIA 12

IV. DYNAMIC MODELS 13

V. POWER FLOW RESULTS 14

VI. TRANSIENT STABILITY STUDY RESULTS 16

VII. SHORT CIRCUIT DUTY 18

VIII. CONCLUSION 19

FIGURES AND TABLES

FIGURE 1 – Pastoria Energy Facility Addition One-Line Diagram 5
TABLE 1 – South of Magunden Transmission Line Ampacity Values 5
TABLE 2 – Power Flow Study Assumptions 11
TABLE W-1 – WECC Disturbance Performance Table 13
TABLE 3-1 – Base Case Thermal Overloads 15
TABLE 3-2 – Heavy Summer N-1 Thermal Overloads 15
TABLE 3-3 – Light Spring N-1 Thermal Overloads 16
TABLE 4-1 – Single Contingency Transient Stability Results 17
TABLE 4-2 – Double Contingency Transient Stability Results 18
TABLE 5 – Short-Circuit Duty Results 19

TABLE 6-1 – Heavy Summer Load Forecast
TABLE 6-2 – Light Spring Load Forecast
TABLE 7-1 – Heavy Summer Power Flow Results
TABLE 7-2 – Light Spring Power Flow Results Stressing Antelope Leg
TABLE 7-3 – Light Spring Power Flow Results Stressing Pardee Leg

APPENDIX A – Heavy Summer Power Flow Plots

APPENDIX B – Light Spring Power Flow Plots w/o Ventura Area Generation

APPENDIX C – Light Spring Power Flow Plots with 35% Ventura Area Generation

APPENDIX D – 3Ø Bus Faults Single Outage with Normal Fault Clearing Times Prior to Including the PEF Addition

APPENDIX E – 3Ø Bus Faults Single Outage with Normal Fault Clearing Times With Inclusion of the PEF Addition

APPENDIX F – 1Ø Bus Faults Double Outage with Normal Fault Clearing Times Prior to Including the PEF Addition

APPENDIX G – 1Ø Bus Faults Double Outage with Normal Fault Clearing Times With Inclusion of the PEF Addition

APPENDIX H – Customer Provided Data

PASTORIA ENERGY FACILITY, LLC
PASTORIA ADDITION
SYSTEM IMPACT STUDY

May 13, 2005

I. INTRODUCTION

Pastoria Energy Facility (PEF) applied to the California Independent System Operator (CAISO) for Interconnection pursuant to Section 5.7 of the CAISO Tariff. Southern California Edison Company (SCE) performed a System Impact Study, as requested, for additional generation installation to the recently constructed Pastoria Energy Facility. The additional generation installation consists of a new gas fired generator with a total net output of 157 MW (PEF Addition). The evaluations included study conditions with all generation projects in queue ahead of the Pastoria Addition.

The purpose of the System Impact Study is to determine the adequacy of SCE's transmission system to accommodate all or part of the requested capacity. This study will identify the extent of any congestion and determine if there are any negative impacts to reliability. New special protection schemes (SPS), facilities, or system upgrades will be recommended to maintain system reliability in accordance with the California Independent System Operator's (CAISO) Reliability Criteria. The existing system cannot accommodate the PEF Addition without transmission upgrades.

The results of the System Impact Study will be used to determine project cost allocation for facility upgrades. The study accuracy and the results for the assessment of the system adequacy are contingent on the accuracy of the technical data provided by the customer as shown in Figure 1 and Appendix H. Any changes to the attached data could invalidate the study results and may require reassessment.

The study includes power flow (steady-state and post-transient), transient stability, and short-circuit duty analysis. The study was performed for two system conditions: (a) 2006 heavy summer load forecast (once-in-ten-year heat wave assumption) with very high internal northern area generation and high Midway-Vincent (Path 26) flow, and (b) 2007 spring load forecast (65% of 2006 heavy summer) with very high Big Creek Corridor generation and two Ventura area generation dispatch sensitivities in order to stress the Pardee and Antelope legs of the Big Creek Corridor. The following sections include discussion and study results of the System Impact Study for the PEF Project Addition.

II. STUDY CONDITIONS AND ASSUMPTIONS

A. Planning Criteria

The supplemental study was conducted by applying the California Independent System Operator (CAISO) Reliability Criteria. More specifically, the main criteria applicable to this study are as follows:

Power Flow Assessment

The following contingencies are considered for transmission and subtransmission lines and 500/230 kV transformer banks ("AA-Banks"):

Assuming the largest unit (San Onofre Unit 2 or 3) initially off and then:

- Single Contingencies (loss of one line **or** one AA-Bank)

Assuming both San Onofre Units in service and then:

- Single Contingencies (loss of one line **or** one AA-Bank)
- Double Contingencies (loss of two lines **or** one line and one AA-Bank) (Outages of two AA-Banks are beyond the Planning Criteria)

The following loading criteria are used:

Transmission Lines	Base Case	Limiting Component Normal Rating
	N-1	Limiting Component A-Rating
	N-2	Limiting Component B-Rating
500/230 kV Transformer Banks	Base Case	Normal Loading Limit
	Long-Term & Short-Term	As defined by SCE Operating Bulletin No.33

The following principles were used in determining whether congestion management, special protection schemes, or facility upgrades are required to mitigate base case, single contingency, or double contingency overloads:

- Congestion management, as a means to mitigate base case overloads, can be used if it is determined to be manageable and the CAISO concurs with the implementation.
- Facility upgrades will be required if it is determined that the use of congestion management is unmanageable as defined in the congestion management section that follows.
- Special protection schemes (SPS), in lieu of facility upgrades, will be recommended if the scheme is effective, does not jeopardize system integrity, does not exceed the current CAISO single and double contingency tripping

limitations, does not adversely effect existing or proposed special protection schemes in the area, and can be readily implemented.

- Facility upgrades will be required if use of protection schemes is determined to be ineffective, the amount of tripping exceeds the current CAISO single and double contingency tripping limitations, adverse impacts are identified on existing or currently proposed special protection schemes, or the scheme cannot be readily implemented.

- Congestion management in preparation for the next contingency will be required, with CAISO concurrence, if no facility upgrades or special protection schemes are implemented.

Congestion Assessment

The following study method was implemented to assess the extent of possible congestion:

a). Under Base Case with all transmission facilities in service, the system was evaluated with all existing interconnected generation and all generation requests in the area that have a queue position ahead of this request (pre-project).

b). Under Base Case with all transmission facilities in service, the system was reevaluated with the inclusion of the PEF Addition (post-project).

If the normal loading limits of facilities are exceeded in (a), the overload is identified as an existing overload that was triggered by a project in queue ahead of the PEF Addition. If the normal loading limits of facilities are exceeded in (b) and were not exceeded in (a), the overload is identified as triggered by the addition of the PEF Addition. The PEF Addition and other market participants in the area may be subjected to congestion management, potential upgrade cost and/or participation of any proposed special protection scheme if the project addition aggravates or triggers the overload. Additionally, the PEF Addition may have to participate in mitigation of overloads triggered by subsequent projects in queue, subject to FERC protocols and policies.

In order for congestion management to be a feasible alternative to system facilities, all of the following factors need to be satisfied:

- Time requirements for necessary coordination and communication between the CAISO operators, scheduling operators and SCE operators.

- Distinct Path/Corridor rating should be well defined so monitoring and detecting congestion and implementing congestion of the contributing generation resources can be performed when limits are exceeded.

- Sufficient amount of market generation in either side of the congested path/corridor should be available to eliminate market power.

- Manageable generation in the affected area is necessary so that operators can implement congestion management if required (i.e. the dispatch schedule is known and controllable).

The results of these studies should be able to identify:

a). if capacity is available to accommodate the proposed PEF Addition and all projects ahead in queue without the need for congestion management, special protection schemes, or facility upgrades

b). if congestion still exists in the area with the inclusion of the PEF Addition and all projects ahead in queue under single and double element outage conditions assuming no new special protection schemes are in place

c). if sufficient capacity is maintained to accommodate all Must-Run and Regulatory Must-Take generation resources with all facilities in service

d). if sufficient capacity is maintained to accommodate the total output of any one generation resource which is not classified as Must-Run.

The range of base case congestion will be determined by reducing market generation projects in the various areas within the SCE northern system (i.e. Big Creek corridor, Ventura Area, Path 26, etc.). For single and double element outage conditions, the same methodology will be used to determine how much generation tripping is required in order to determine if use of special protection schemes is appropriate. Use of special protection schemes will be deemed inappropriate if the total amount of generation reduction is found to exceed 1,150 MW under loss of one transmission element and 1,400 MW under loss of two transmission elements. These limits are established by the CAISO utilizing the current Spinning Reserve Criteria.

B. Pastoria Energy Facility Addition

The Pastoria Energy Facility is geographically located east of Interstate 5 north of Lebec, California. The Project Addition is to be connected to the recently constructed Lebec 230 kV Substation. Figure 1 below provides the single line diagram showing the proposed PEF Addition.

The inclusion of the PEF Addition is anticipated to impact flows on the Big Creek Corridor transmission lines south of Magunden. There are currently eleven 230 kV transmission lines south of Magunden that will increase to twelve with the addition of another project in queue ahead of the PEF Addition. Existing amp ratings for these transmission lines are provided below in Table 1.

FIGURE 1
PASTORIA ENERGY FACILITY ADDITION

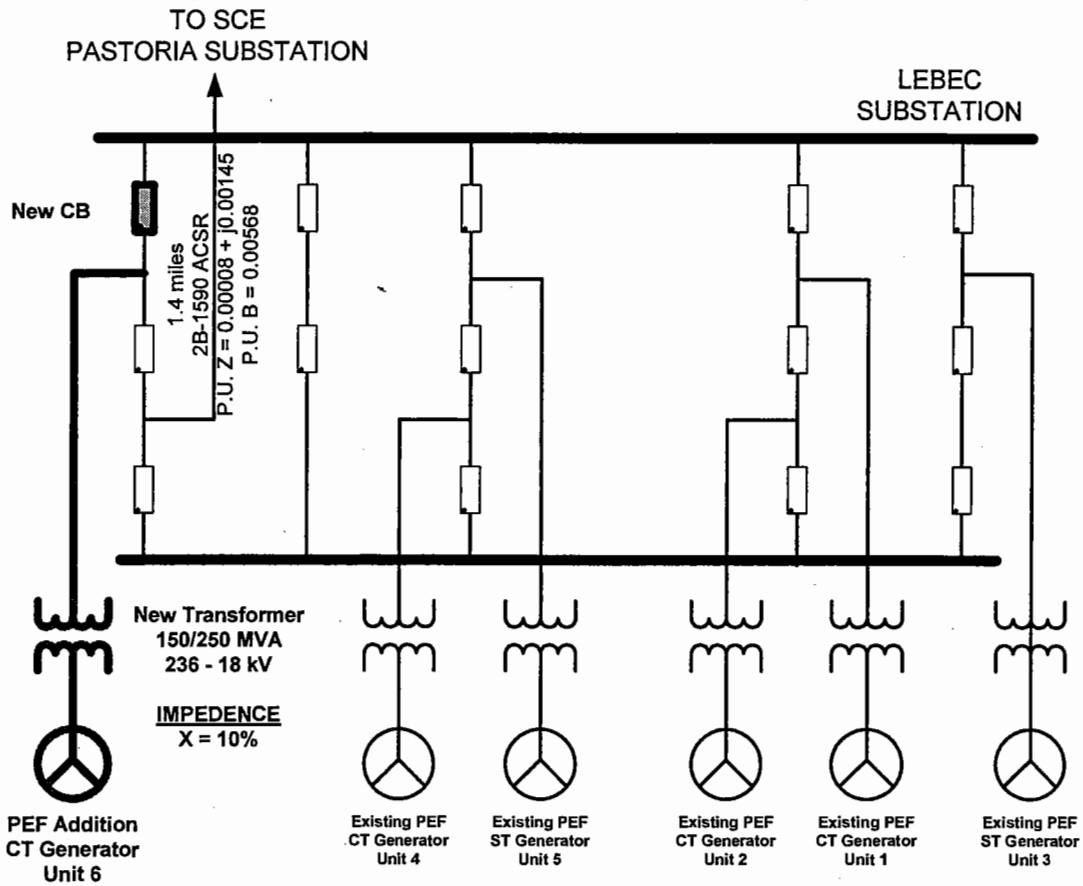

TABLE 1
SOUTH OF MAGUNDEN TRANSMISSION LINE AMPACITY VALUES

Transmission Line	Normal	Long-Term Emergency	Short-Term Emergency
Antelope Magunden No.1 230 kV	895	945	945
Antelope-Mesa 230 kV	895	1020	1190
Antelope-Vincent 230 kV	1240	1342	1342
Antelope-Cottonwind 230 kV	1240	1320	1342
Cottonwind-Magunden 230 kV	1240	1342	1342
Magunden-Pastoria No.1 230 kV	825	936	936
Magunden-Pastoria No.2 230 kV	825	936	936
Magunden-Pastoria No.3 230 kV	1150	1320	1342
Bailey-Pardee 230 kV	1500	1500	1500
Pardee-Pastoria 230 kV	1500	1500	1500
Pardee-Pastoria-Warne 230 kV	1240	1342	1342
Pardee-*Pastoria*-Warne 230 kV	1240	1342	1342
Bailey-Pastoria 230 kV	1500	1500	1500

C. Currently Planned Transmission Projects

Wind generation interconnection requests in the Antelope Valley and Tehachapi Area ahead of the PEF Addition have triggered the need for additional transmission projects or upgrades in the Big Creek Corridor. These upgrades include the new transmission facilities from the SCE Antelope Substation to the SCE Pardee and SCE Vincent substations as outlined below. An application for a Certificate of Public Convenience and Necessity (CPCN) has been filed for these upgrades by SCE with the California Public Utilities Commission (CPUC). The following transmission facilities for which a CPCN application was filed were modeled into the starting power flow cases:

- Segment 1 of the Antelope Transmission Project - a new 500 kV transmission line (bundled 2156 ACSR) initially energized at 230 kV from the Antelope substation to Pardee substation (approved by the CAISO)

- Segment 2 of the Antelope Transmission Project - a new 500 kV transmission line (bundled 2156 ACSR) initially energized at 230 kV from the Antelope substation to Vincent substation (not yet approved by the CAISO)

- Segment 3 of the Antelope Transmission Project (not yet approved by the CAISO):

    - a new radial 500 kV transmission line (bundled 2156 ACSR) initially energized at 230 kV from the Antelope substation to the potential location of a conceptual substation hub referred to as Tehachapi Substation #1 near Cal Cement

    - a new 230 kV transmission line (bundled 1590 ACSR) from the location of the Tehachapi Substation #1 to the location of a second conceptual substation referred to as Tehachapi Substation #2 near Monolith

    - a new substation near Monolith with two line positions (one for line to Antelope and one for line to the Barren Ridge I Wind Project which then continues to the Barren Ridge II Wind Project) referred to as Tehachapi Substation #2.

In addition to the above transmission projects, the Pastoria-Pardee Reconductor Project was also included into the starting power flow cases. This project was identified as an infrastructure replacement project and consists of reconductoring two of the three lines south of Pastoria (Pastoria-Bailey, Bailey-Pardee and Pastoria-Pardee 230 kV 605 ACSR conductored transmission lines) with a new 666.6 ACSS/TW conductor. The new conductor will increase the thermal conductor rating of these two lines from 885 amps up to 1500 amps. The third transmission line south of Pastoria (Pastoria-Pardee-Warne 230 kV) is not part of this project and therefore will be limited to a maximum conductor rating of 1240 amps based on conductor

type. This project is currently under construction with the Pastoria-Bailey 230 kV line already upgraded. Upgrades to the remaining lines will be done commencing on October 2005 and be completed by April 2006.

Need for additional transmission upgrades have been identified in System Impact Studies performed for projects ahead in queue of the PEF Addition. These upgrades are currently being explored as part of the corresponding Facilities Study and may provide additional capacity for the PEF Addition. These potential upgrades include complete tear-down and rebuild of the existing Antelope-Mesa 230 kV transmission line. Neither a CPCN application has not been filed with the CPUC for this transmission upgrade nor has the CAISO granted approval for such an upgrades. As such, these projects were not included into the starting base cases.

D. System Conditions

To simulate the SCE transmission system for analysis, the study used databases that were used to conduct the SCE Annual CAISO Controlled Facilities Expansion Program. The bulk power study considered scenarios that evaluated maximum Midway-Vincent[1] imports[2] and maximum generation from the Big Creek hydro units, Qualified Facilities, and market generation in the Big Creek and Ventura areas. Pump loads were assumed off for both the heavy summer and light spring conditions. These conditions were examined to identify loading scenarios that would stress the SCE 500 kV transmission system network and the 230 kV Big Creek corridor. In addition, the study considered three load conditions: 2006 heavy summer, 2007 light spring stressing the Pardee leg of the Big Creek corridor, and 2007 light spring stressing the Antelope leg of the Big Creek Corridor.

E. Big Creek Remedial Action Scheme

The Big Creek system has several existing remedial action schemes (RAS) for single and double element outage conditions. The relevant elements of the existing Big Creek RAS that may be impacted by the proposed PEF Addition are as follows:

1. An overload of the following lines will initiate an automatic runback of the generation units at Mammoth Pool and/or Eastwood. Eastwood will not runback if in pump mode.

    - Magunden-Pastoria No.1 230-kV
    - Magunden-Pastoria No.2 230-kV
    - Magunden-Pastoria No.3 230-kV

[1] Midway-Vincent lines interconnect Northern California with Southern California and are referred to as Path 26. Maximizing Midway-Vincent flow increases imports through the SCE 500 kV network.
[2] Imports were set to 3,400 MW in accordance with the existing WECC Path Rating at time of application. It should be noted that Path rating studies are currently underway to evaluate further increasing path rating to 3,700 and 4,000 MWs.

2. An SEL-68 stability relay located at Magunden will run-back the generation units at Mammoth Pool and/or Eastwood for growing oscillations and trip for unstable power swings. Eastwood will not be tripped if in pump mode.

3. At any time that the Big Creek and San Joaquin Valley RAS is inoperative or if the SEL-68 stability trip relay at Magunden is unavailable, the following limitation will apply:

   - Big Creek Project (Big Creek 1, 2, 3, 4, 8, Mammoth Pool, Portal PH, and Eastwood) net generation output is limited as defined by System Operating Bulleting No.204.
   - The power flow south of the SCE Magunden substation is limited to 1180 MW with all five lines in service.

F. New PEF Special Protection Schemes

The initial Pastoria Energy Facility 750 MW project required a new Special Protection Scheme (PEF SPS) for loss of one or two transmission facilities. This new SPS has been approved by the WECC RAS Task Force and has already been placed in service. The following outlines the outages that can result in the potential operation of the new PEF SPS:

Single Outages

1. Loss of Antelope-Magunden No.1 230 kV
2. Loss of Antelope-Magunden No.2 230 kV
3. Loss of Pastoria-Edmonston 230 kV
4. Loss of Pastoria-Pardee 230 kV
5. Loss of Pastoria-Pardee-Warne 230 kV
6. Loss of Pardee-Bailey 230 kV
7. Loss of Pastoria-Bailey 230 kV

Double Outages

1. Loss of Antelope-Magunden No.1 and No.2 230 kV lines
2. Loss of Antelope-Vincent and Antelope-Mesa 230 kV lines
3. Loss of Pastoria-Pardee-Warne and Pastoria-Pardee 230 kV lines
4. Loss of Pastoria-Pardee-Warne and Pastoria-Bailey 230 kV lines
5. Loss of Pastoria-Pardee-Warne and Pardee-Bailey 230 kV lines
6. Loss of Pastoria-Pardee and Pastoria-Bailey 230 kV lines
7. Loss of Pastoria-Pardee and Pardee-Bailey 230 kV lines

Maintenance Outages

Under maintenance conditions, the proposed PEF SPS will arm the entire Pastoria Energy Facility (750 MW) to trip for the next outage condition.

The PEF SPS design is by far the most complicated Special Protection Scheme in service to protect the SCE network. The scheme has a total of 28 arming points, which is the current maximum number of arming points that SCE will consider in implementing an SPS. Twenty-seven of the twenty-eight arming points are utilized to trip individual units at the Pastoria Energy Facility (five units) under the outages outlined above. The design of the scheme groups the seven single outages into five arming categories in order to limit the number of arming points required for single outages to twenty-five (5 arming buckets x 5 units = 25) in a fashion that provides the most flexibility. For loss of two transmission lines, the entire PEF project is tripped thereby requiring only one arming point. An additional arming point is utilized to handle maintenance outages and overlapping outages.

Generation projects in queue ahead of the PEF addition were identified to potentially require implementation of special protection schemes. Since the PEF SPS cannot be expanded beyond the current design, complete redesigned of the RAS may be necessary. Such redesign may involve tripping the proposed project addition for each of the outages previously identified. New facility upgrades will be required if it is determined that use of SPS cannot be implemented for the PEF addition. Results of the study will be used to determine if redesigned of the PEF RAS may be used to accommodate the additional generation unit.

G. Power Flow Study

The system impact studies evaluated a total of six different power flow study scenarios. Transmission projects were included in order to identify if the need for additional delivery upgrades are necessary. Further description of the additional case assumptions follows:

1. Big Creek Corridor under 2006 heavy summer with all currently planned transmission upgrades and generation projects in queue ahead of the PEF Addition, Case 1.

   Upgraded Big Creek Corridor to include all transmission projects and a 2006 heavy summer load forecast with high internal generation in the SCE northern area electrical system. Generation included: Year 2004 reliability must-run, regulatory must-take, all existing generation in the basin area, and all other proposed generation projects in queue ahead of the proposed Pastoria Addition. Generation patterns were maximized in the SCE northern area, with the South of Lugo limit enforced, in order to identify extent of potential congestion after the in-service of the proposed project

2. Big Creek Corridor under 2006 heavy summer with all currently planned transmission upgrades and the inclusion of the PEF Addition, Case 2.

   Case 1 was modified to include the PEF Addition. South of Lugo flow was not enforced in order to determine project contribution to the South of Lugo loading problem.

3. Big Creek Corridor under 2007 light spring with all currently planned transmission upgrades and generation projects in queue ahead of the PEF Addition while stressing the Pardee leg of the Big Creek corridor, Case 3

   Upgraded Big Creek Corridor to include all transmission projects and a 2007 light spring load forecast with high internal generation in the SCE northern area electrical system. Generation included: Year 2004 reliability must-run, regulatory must-take, all existing generation in the basin area, and all other proposed generation projects in queue ahead of the proposed PEF Addition. Generation patterns were maximized in the SCE northern area, except for Ventura Area generation which was assumed off-line, in order to identify the extent of potential congestion after the in-service of the proposed project when stressing the Pardee leg of the Big Creek corridor.

4. Big Creek Corridor under 2007 light spring with all currently planned transmission upgrades and the inclusion of the PEF Addition while stressing the Pardee leg of the Big Creek Corridor, Case 4

   Case 3 was modified to include the PEF Addition.

5. Big Creek Corridor under 2007 light spring with all currently planned transmission upgrades and generation projects in queue ahead of the PEF Addition while stressing the Antelope leg of the Big Creek corridor, Case 5.

   Case 3 was modified to adjust interchanges between Arizona and California so that Ventura area generation can be dispatched to reflect 35% of total nameplate capacity available in order to stress the Antelope leg of the Big Creek corridor.

6. Big Creek Corridor under 2007 light spring with all currently planned transmission and the inclusion of the PEF Addition while stressing the Antelope leg of the Big Creek Corridor, Case 6

   Case 5 was modified to include the PEF Addition.

TABLE 2
POWER FLOW STUDY ASSUMPTIONS (MW)

	Heavy Summer		Light Spring Stress Pardee		Light Spring Stress Antelope	
Area Assumptions	**Case 1 Pre**	**Case 2 Post**	**Case 3 Pre**	**Case 4 Post**	**Case 5 Pre**	**Case 6 Post**
Generation	15,679	15,702	7,299	7,322	8,106	8,128
Import	7,462	7,462	6,828	6,827	6,027	6,028
Load	22,553	22,553	13,625	13,625	13,625	13,625
System Losses	588	611	502	524	508	531
Major Flows						
Path 26	3,390	3,388	3,391	3,389	3,371	3,367
East-of-River	3,121	3,121	2,287	2,483	1,785	1,782
West-of-River	3,940	3,944	3,737	3,735	3,069	3,067
South of Magunden	716	716	1,077	1,077	1,077	1,077
North of Lugo	967	967	28	27	26	26
South of Lugo	5,799	5,853	4,542	4,597	4,574	4,630
South of Pardee & Vincent	3,400	3,509	3,007	3,119	3,468	3,579
SCIT	12,787	12,785	10,187	10,181	9,498	9,495

H. Transient Stability Study

The following study conditions were utilized in conducting the transient stability assessment:

- An SEL-68 stability relay located at Magunden that is part of the Big Creek Remedial Action Scheme (RAS) could result in either run back or tripping of the Big Creek hydro generation depending on stable or unstable power swings, which occur under extremely high south of Magunden flows. To examine potential impacts to the existing Special Protection Schemes, all single contingency conditions were evaluated with south of Magunden power flows adjusted prior to adding the PEF Addition so that loss of any one line did not trigger the Big Creek RAS.

- For double contingency conditions, south of Magunden power flows were maximized to determine if additional wind generation adversely aggravates the existing special protection schemes (SPS) in the Big Creek Corridor and triggers need to include additional generation units into the existing Special Protection Schemes.

- Standard fault clearing times were applied for single outage contingencies assuming three-phase-to-ground faulted conditions. These times include 6-cycle fault clearing for 230 kV faults in the Big Creek corridor, 5-cycle fault clearing for 230 kV faults in the main LA Basin (south of the Vincent and Pardee substations), and 4-cycle fault clearing for 500 kV faults.

- Standard fault clearing times were applied for double outage contingencies assuming single-phase-to-ground faulted conditions.

- Delayed fault clearing times were applied for single contingencies assuming single-line-to-ground faulted conditions.

I. Short -Circuit Duty

To determine the impact on short-circuit duty after inclusion of the PEF Addition, the study calculated the maximum symmetrical three-phase-to-ground short-circuit duties at the most critical locations. Bus locations where short-circuit duty is increased with the PEF Addition by at least 0.1 KA and the duty is in excess of 60% of the minimum breaker nameplate rating are flagged for further review in the Facilities Study. Generator and transformer data as provided by the customer was used according to the generator and transformer data sheets.

III. GENERATOR ELECTRIC GRID FAULT RIDE-THROUGH CAPABILITY CRITERIA

WECC has recently adopted a Generator Electrical Grid Fault Ride-Through Capability Criteria. The purpose of this Low Voltage Ride-Through Criteria is to ensure continued reliable service. The Criteria is summarized as follows:

1. Generators are required to remain in-service during system faults (three phase faults with normal clearing and single-line-to-ground with delayed clearing) unless clearing the fault effectively disconnects the generator from the system. This requirement does not apply to faults that would occur between the generator terminals and the high side of the generator step-up transformer or to faults that would result in a voltage lower than 0.15 per unit as measured on the high side of the generator step up transformer.

2. In the post-fault transient period, generators are required to remain in-service for the low voltage excursions specified in WECC Table W-1 (provided below) as applied to load bus constraint. These performance criteria are applied to the generator interconnection point, not the generator terminals.

3. Generators may be tripped after the fault period if this action is intended as part of a special protection scheme.

4. This Standard does not apply to a site where the sum of the installed capabilities of all machines is less than 10MVA, unless it can be proven that reliability concerns exist.

5. This Standard applies to any generation independent of the interconnected voltage level.

6. This standard can be met by the performance of the generators or by installing additional equipment (e.g. SVC, etc.).

7. Existing individual generator units that are, or have been, interconnected to the network at the same location at the time of the adoption of this Standard are exempt from meeting this Standard for the remaining life of the existing generation equipment. Existing individual generator units that are replaced are required to meet this Standard.

Table W-1
WECC DISTURBANCE-PERFORMANCE TABLE
OF ALLOWABLE EFFECTS ON OTHER SYSTEMS

NERC and WECC Categories	Outage Frequency Associated with the Performance Category (Outage/Year)	Transient Voltage Dip Standard	Minimum Transient Frequency Standard	Post-Transient Voltage Deviation Standard (See Note 2)
A	Not Applicable	Nothing in Addition to NERC		
B	≥ 0.33	Not to exceed **25%** at load buses or **30%** at non-load buses. Not to exceed **20% for more than 20 cycles** at load buses.	Not below **59.6 Hz** for 6 cycles or more at a load bus	Not to exceed **5%** at any bus
C	0.033 – 0.33	Not to exceed 30% at any bus. Not to exceed **20% for more than 40 cycles** at load buses.	Not below **59.0 Hz** for 6 cycles or more at a load bus	Not to exceed **10%** at any bus
D	< 0.033	Nothing in Addition to NERC		

Note 2: As an example in applying the WECC Disturbance-Performance Table, Category B disturbance in one system shall not cause a transient voltage dip in another system that is greater than 20% for more than 20 cycles at load buses, or exceed 25% at load buses or 30% at non-load buses at any time other than during the fault.

IV. DYNAMIC MODELS

GE PSLF Version 14.2, adopted by WECC, supports the generation models proposed by for the PEF Addition.

genrou

This model is used for a solid rotor generator that is represented by equal mutual inductance rotor modeling.

ggovl

This model is used to represent a general governor model that is proposed to be used with this generator.

exst4b

This model is used to represent an IEEE type ST4b excitation system proposed to be used with this generator.

pss2a

This model is used to represent a dual input power system stabilizer (IEEE type PSS2A) proposed to be used with this generator.

V. POWER FLOW RESULTS

The need for additional transmission line upgrades south of Antelope was identified with the addition of previous generation projects in queue ahead of the PEF Addition. SCE was ordered to file an application for a Certificate for Public Convenience and Necessity (CPCN) with the California Public Utility Commission (CPUC) for transmission facilities necessary to integrate wind generation pursuing interconnection via the FERC mandated CAISO Interconnection process as well as other conceptual wind generation projects located in the Antelope Valley and Tehachapi Region[3]. As a result, these studies were performed with the assumption that transmission upgrades south of Antelope as discussed in the Assumptions Section were in service prior to inclusion of the PEF Addition. These upgrades are part of the Antelope Transmission Project (ATP) and involve new transmission from the Antelope Substation to the Pardee Substation located in Santa Clarita, from Antelope to Vincent. The Antelope, Pardee, and Vincent Substations are located in the Lancaster area, Santa Clarita, and Acton area respectively.

The following presents the power flow study results. Power flow plots are provided in Appendix A (Heavy Summer), Appendix B (Light Spring w/o Ventura area generation) and Appendix C (Light Spring with 35% Ventura area generation). Details of heavy summer results are provided in Table 7-1 while Light Spring results stressing the Antelope and Pardee Legs of the Big Creek Corridor are provided in Table 7-2 and Table 7-3 respectively.

BASE CASE

With the addition of generation at the existing Pastoria Energy Facility, the study identified two transmission lines with base case overloads during summer conditions and three transmission lines with base case overloads during spring conditions. These overloads are summarized below in Table 3-1.

[3] CPUC Decision 04-06-010

Table 3-1
Base Case Thermal Overloads

Impacted Transmission Lines	Heavy Summer		Light Spring	
	Pre	Post	Pre	Post
Antelope-Cottonwind 230 kV	97.0%	101.7%	107.4%	112.0%
Antelope-Mesa 230 kV	112.5%	114.7%	111.0%	114.3%
Pardee Leg of Pardee-Pastoria-Warne 230 kV	-	-	101.2%	109.7%

It should be noted that the Pardee-Pastoria-Warne 230 kV T/L is not part of the Pastoria-Pardee Reconductor Project and therefore will require mitigation of identified overload problem. In addition, this line is limited due to line clearance so congestion management protocols need to be established such that the loading can be decreased in a short period.

SINGLE OUTAGE CONTINGENCY (N-1)

Under heavy summer conditions, eight single contingencies were identified to result in line loadings that are in excess of the maximum allowable limit on five different transmission lines. Two of the five impacted transmission lines were also identified to experience base case condition thermal loadings in excess of maximum allowable limit. Two of the three single contingency outage impacted transmission lines that are not identified to be a base case overload are triggered by a project in queue ahead of the PEF Addition but are aggravated with the PEF Addition. The remaining transmission line overload identified under heavy summer load conditions is triggered with the PEF Addition. Highest loading on impacted transmission line is summarized below in Table 3-2 with a more detailed summary provided in Table 7-1 located in the Table Section.

Table 3-2
Heavy Summer Thermal Overloads
Under Loss of One Transmission Facility

Impacted Transmission Line	**Worst Single Contingency**	**Pre**	**Post**
Antelope-Cottonwind 230 kV	Antelope-Magunden 230 kV T/L	114.3%	120.4%
Antelope-Magunden 230 kV	Antelope-Cottonwind 230 kV T/L	114.9%	122.6%
Antelope-Mesa 230 kV	Mesa-Vincent 230 kV T/L	130.4%	134.3%
Antelope-Vincent 230 kV (Existing)	New Antelope-Vincent 230 kV T/L	102.3%	108.9%
Pardee-Pastoria-Warne 230 kV	Bailey-Pastoria 230 kV T/L	110.5%	122.0%

Under light spring conditions, a total of nine single contingencies were identified to impact eight transmission lines. Three of these eight impacted transmission lines were also identified as base case overload problems. Overloads on the remaining five impacted transmission lines were found to be triggered by a project in queue ahead of the PEF Addition and are aggravated with the inclusion of the PEF Addition. Of these five transmission lines, two involve overloads on south of Pastoria transmission facilities that are currently being upgraded from 605 ACSR conductor (885 amps) to 666.6 ACSS/TW conductor (1500 amps). The 666.6 ACSS/TW conductor transmission lines do not have

emergency capability due to conductor limitations (normal rating is equal to emergency rating). Since the inclusion of the PEF Addition adversely increases the tripping potential for the 750 MW Pastoria Energy Facility, the PEF Addition will be required to mitigate such incremental impact by either adding new facilities or participating in a new Special Protection Scheme (SPS) that trips the PEF Addition if use of such SPS is found to be acceptable.

Highest loading on impacted transmission line is summarized below in Table 3-3 with a more detailed presentation provided in Table 7-2 and Table 7-3 located in the Table Section

Table 3-3
Light Spring Thermal Overloads
Under Loss of One Transmission Facility

Impacted Transmission Line	Worst Single Contingency	Pre	Post
Antelope-Cottonwind 230 kV	Pardee-Pastoria 230 kV T/L	120.6%	138.1%
Antelope-Magunden 230 kV	Antelope-Cottonwind 230 kV T/L	133.7%	141.4%
Antelope-Mesa 230 kV	Mesa-Vincent 230 kV T/L	127.0%	130.5%
Antelope-Vincent 230 kV (Existing)	New Antelope-Vincent 230 kV T/L	120.6%	126.8%
Bailey-Pardee 230 kV	Pardee-Pastoria 230 kV T/L	99.2%	107.9%
Bailey-Pastoria 230 kV	Pardee-Pastoria 230 kV T/L	106.7%	116.1%
Pardee-Pastoria 230 kV	Bailey-Pastoria 230 kV T/L	102.4%	111.8%
Pardee-Pastoria-Warne 230 kV	Bailey-Pastoria 230 kV T/L	136.4%	148.2%

DOUBLE OUTAGE CONTINGENCY (N-2)

The studies identified a total of fourteen "likely" double contingencies impacting ten different 230 kV transmission lines. All impacted ten different transmission lines were found to be impacted by projects in queue ahead of the PEF Addition. The inclusion of the PEF Addition aggravates these overloads and therefore will be required to participate in mitigation measures. Most incremental impacts are in the order of 10 to 20 percent. In addition, several double outage contingencies did not result in a converging solution indicating a potential voltage collapse. The use of a special protection scheme will only be considered if the CAISO concurs that the current 1,400 MW N-2 maximum generation trip limit can be exceeded. The details of these double outage contingencies are provided in Table 7-1, Table 7-2, and Table 7-3.

VI. TRANSIENT STABILITY STUDY RESULTS

Single Contingencies (N-1)

As discussed in the assumptions section, all single contingency transient stability studies were conducted by applying a three-phase-to-ground bus fault at critical locations. These locations involved substations in the Big Creek corridor between Magunden, Pardee, and Vincent. Results of the transient stability analysis indicate that the system remains stable

under loss of one transmission line and operation of any corresponding special protection schemes. Single contingency transient stability plots prior to including the PEF Addition and after including the PEF Addition are provided in Appendix D and Appendix E respectively. Table 4 below summarizes the critical outages examined and provides study results.

Table 4-1
Single Contingency
Transient Stability Study Results

Type of Outage	Fault Type	Fault Duration	Transmission Line Outage	Stability Results
Single	3Ø	6 cycles	Antelope-Magunden No.1 230 kV	Stable
Single	3Ø	6 cycles	Antelope-Mesa 230 kV	Stable
Single	3Ø	6 cycles	New Antelope-Pardee 230 kV	Stable
Single	3Ø	6 cycles	New Antelope-Vincent 230 kV	Stable
Single	3Ø	6 cycles	Proposed Antelope-Cottonwind 230 kV	Stable
Single	3Ø	6 cycles	Bailey-Pastoria 230 kV	Stable
Single	3Ø	6 cycles	Magunden-Pastoria No.3 230 kV	Stable
Single	3Ø	6 cycles	Proposed Magunden-Cottonwind 230 kV	Stable
Single	3Ø	6 cycles	Pardee-Bailey 230 kV	Stable
Single	3Ø	6 cycles	Pardee-Pastoria 230 kV	Stable
Single	3Ø	6 cycles	Pastoria-Pardee-Warne 230 kV	Stable

Double Contingencies (N-2)

As discussed in the assumptions section, all double contingency studies were conducted by applying a single-phase-to-ground bus fault at critical locations. These locations involved substations in the Big Creek corridor between Magunden, Pardee, and Vincent. Results of the double contingency transient stability analysis indicate that the inclusion of the PEF Addition does not adversely impact system stability. All identified transient stability problems are mitigated by either existing special protection schemes (Big Creek RAS and PEF SPS) or by previously identified need for additional SPS triggered by a project in queue ahead of the PEF Addition. As a result, the need for tripping the PEF Addition is dictated by the incremental thermal loading contribution associated with the PEF Addition. Double contingency transient stability plots prior to the PEF Addition and after including the PEF Addition are provided in Appendix F and Appendix G respectively. Table 4-2 below summarizes the critical outages examined and provides study results.

Table 4-2
Double Contingency
Transient Stability Study Results

Type of Outage	Fault Type	Fault Duration	Transmission Line Outage	Stability Results
Double	1Ø	6 cycles	Antelope-Magunden No.1 230 kV Proposed Antelope-Cottonwind 230 kV	Stable
Double	1Ø	6 cycles	Antelope-Mesa 230 kV Antelope-Vincent 230 kV	Stable
Double	1Ø	6 cycles	New Antelope-Vincent 230 kV Antelope-Vincent 230 kV	Stable
Double	1Ø	6 cycles	Antelope-Magunden No.1 230 kV Proposed Magunden-Cottonwind 230 kV	Stable
Double	1Ø	6 cycles	Magunden-Pastoria No.2 230 kV Magunden-Pastoria No.3 230 kV	Stable
Double	1Ø	6 cycles	Bailey-Pastoria 230 kV Pardee-Pastoria 230 kV	Stable
Double	1Ø	6 cycles	Pardee-Pastoria 230 kV Pardee-Pastoria-Warne 230 kV	Stable
Double	1Ø	6 cycles	Pardee-Bailey 230 kV Pardee-Pastoria 230 kV	Stable
Double	1Ø	6 cycles	Pardee-Bailey 230 kV Pardee-Pastoria-Warne 230 kV	Stable

VII. SHORT CIRCUIT DUTY STUDY RESULTS

The results of the maximum symmetrical three-phase-to-ground short circuit duty at the critical buses in the SCE bulk transmission system are summarized below in Table 6. The study results indicate that the PEF Addition increases short-circuit duties by an amount equal or greater than 0.1kA at seven locations were duty is in excess of 60% of the minimum breaker nameplate rating. The following summarizes the impact of the PEF addition:

- At Pastoria 230kV substation bus, the short-circuit duty is increased by 1.8kA from 31.4 to 33.2kA

- Breakers at the seven locations listed below in Table 5 should be evaluated by SCE T/S Engineering to determine need for breaker replacement.

Table 5
Three-Phase-to-Ground Short-Circuit Duty Results

Substation	Bus KV	Pre-Project		Post-Project		DELTA
		X/R	KA	X/R	KA	KA
Pastoria	230	14.1	31.4	14.8	33.2	1.8
Magunden	230	10	21.2	10	21.5	0.3
Pardee	230	17.3	54.5	17.2	54.7	0.2
Lugo	500	21.7	43.7	21.7	43.8	0.1
Mammoth	230	10.5	7.6	10.5	7.7	0.1
Sylmar S.	230	19.5	57.7	19.4	57.8	0.1
Vincent	230	19.5	54	19.5	54.1	0.1

VIII. CONCLUSION

LOAD FLOW RESULTS

The study identified base case overload problems on the Antelope-Mesa 230 kV T/L, Antelope-Cottonwind 230 kV T/L, and Pardee-Pastoria-Warne 230 kV T/L triggered by a project(s) in queue ahead of the PEF Addition. Under heavy summer conditions with the PEF Addition, loading on the Antelope-Mesa 230 kV T/L and Antelope-Cottonwind 230 kV T/L were found to be 115% and 102% respectively. Under light spring conditions with the PEF Addition, loading on the Antelope-Mesa 230 kV T/L, Antelope-Cottonwind 230 kV T/L, and Pardee-Pastoria-Warne 230 kV T/L were found to be 114%, 112% and 110% respectively.

In addition, the study identified a total of eight single contingencies under heavy summer conditions and nine single contingencies under light spring conditions which resulted in thermal overload problems on transmission facilities in the Big Creek Corridor south of the SCE Magunden 230 kV substation. Under heavy summer conditions with the PEF Addition, five different 230 kV transmission lines were found to be impacted with loadings ranging from 109% to 123%. Under light spring conditions with the PEF Addition, eight different 230 kV transmission lines were found to be impacted with loadings ranging from 108% to 148%.

Lastly, the study identified a total of fourteen double contingencies under heavy summer conditions and thirteen double contingencies under light spring conditions which resulted in thermal overload problems on transmission facilities in the Big Creek Corridor south of the SCE Magunden 230 kV substation or case non-convergence. Under heavy summer conditions with the PEF Addition, ten different 230 kV transmission lines were found to be impacted with loadings ranging from 102% to 187%. Under light spring conditions with the PEF Addition, nine different 230 kV transmission lines were found to be impacted with loadings ranging from 106% to 230%.

TRANSIENT STABILITY RESULTS

Transient stability studies determined that the system remained stable under both single and double contingency outage conditions with the existing Big Creek and Pastoria Energy Facility Special Protection Schemes (SPS). As a result, the need for the PEF Addition to participate in an SPS requires the entire PEF Addition to be tripped to mitigate the incremental contribution to thermal overload problems identified in this study.

Transient stability studies did not identify a violation of the recently WECC approved Generator Electric Grid Fault Ride-Through Capability Criteria.

SHORT-CIRCUIT DUTY RESULTS

Breakers at the following seven locations should be evaluated by SCE T/S Engineering to determine need for breaker replacement: Lugo 500 kV, Mammoth 230 kV, Magunden 230 kV, Pardee 230 kV, Pastoria 230 kV, Sylmar 230 kV, and Vincent 230 kV.

SPECIAL PROTECTION SCHEME REQUIREMENT

Due to SPS design limitations, the potential for system instability and gross thermal overloads identified under loss of two transmission facilities (N-2) in the Big Creek Corridor south of the Magunden Substation are currently mitigated by tripping the entire 750 MW Pastoria Energy Facility regardless of flow levels. This could result in a maximum potential generation trip of approximately 1,150 MW which corresponds to the sum total of the 750 MW Pastoria Energy Facility and the corresponding Big Creek Hydro Generation trip. In addition, all projects in queue ahead of the PEF Addition who contribute to the identified thermal overloads will need to participate in an SPS to mitigate their corresponding incremental loading contributions. As a result, the total amount of generation tripping potential under double outage contingencies with the inclusion of all queued projects could potentially increase in excess of 2,300 MW.

With the addition of new transmission facilities south of Antelope, Phase 1 and Phase 2 of the Antelope Transmission Project, the total amount of generation tripping could be reduced down to approximately 1,700 MW which is still in excess of the 1,400 MW CAISO Spinning Reserve limit. As such, SCE will require CAISO Operational approval to exceed the currently established 1,400 MW N-2 generation tripping limit if use of an SPS for the PEF Addition is to be considered. Arming studies necessary to support the SPS design and approval by the WECC RAS Task Force will determine the exact amount of generation tripping requirements once they are completed. However, due to design limitations, the PEF Addition may require complete redesign of the recently installed PEF SPS.

LIMITED OPERATION STUDIES

The proposed in-service date for the PEF Addition is earlier than a number of generation and transmission projects ahead in queue. Due to system limitations, the PEF Addition will not be allowed to generate prior to these upgrades being in service without additional studies. Operational studies will be necessary to identify if the PEF Addition can be placed in-service on a temporary basis, under limited condition (output and period), prior to constructing the currently planned transmission upgrades, except for the Pastoria-Pardee Reconductor Project, and any new transmission upgrades identified for this project during the Facilities Study. The operation of the PEF Addition prior to the in-service date of the transmission projects identified in the Facilities Study will be subject to CAISO approval.

FACILITY STUDY

A **Facilities Study** will be required to determine the facilities and upgrades necessary to interconnect the proposed PEF Addition. The study should:

1. Investigate feasibility and develop cost associated with upgrading the existing Pastoria-Pardee-Warne 230 kV T/L. Thermal base case overload on this transmission line was triggered by a project in queue ahead of the PEF Addition. Prior to the inclusion of the PEF Addition, the overload was found to be marginal and therefore upgrade was not recommended. The transmission upgrade that should be evaluated is the reconductoring with new ACSS/TW class conductor such as a 1334.6 ACSS/TW or other conductor with mechanical properties similar to the existing 1033 ACSR in order to avoid tear-down of existing tower infrastructure.

2. If reconductor with new ACSS/TW class conductor is not feasible, develop cost associated with the complete tear-down and rebuild of the Pastoria-Pardee-Warne 230 kV T/L with bundled 1590 ACSR conductor.

3. For loss of two transmission lines in the Big Creek Corridor south of Magunden, investigate with the CAISO the possibility of tripping generation in excess of the current 1,400 MW limit.

4. If the CAISO does not allow tripping in excess of the current 1,400 MW N-2 Spinning Reserve limit, investigate feasibility and develop costs associated with a new 230 kV T/L from Pastoria to Pardee.

5. Perform Technical Assessments with the following upgrades modeled in the case in order to determine if sufficient capacity is made available with the upgrades in place:

    a. Upgrade to the existing Antelope-Mesa 230 kV T/L. This transmission upgrade was identified in a System Impact Study performed for a project in queue ahead of the PEF Addition. The project upgraded should involve complete tear-down and rebuild with

i. 500 kV single-circuit construction standards between the SCE Antelope and SCE Rio Hondo substations

ii. 230 kV double-circuit construction standards with a single bundled 1590 ACSR conductor between the SCE Rio Hondo and SCE Mesa 230 kV substations

b. Upgrade the existing section of the Antelope-Magunden No.2 230 kV T/L south of the newly proposed Cottonwind 230 kV substation. This transmission upgrade was identified in a System Impact Study performed for a project in queue ahead of the PEF Addition. The project upgraded should involve complete tear-down and rebuild with bundled 1590 ACSR conductor.

c. Upgrade to the existing Pardee-Pastoria-Warne 230 kV T/L with 1334.6 ACSS/TW.

d. Path 26 dispatch at 3,700 MW consistent with May 2, 2005 upgraded Path Rating.

6. If the initial technical studies determine that operating the new 500 kV facilities at 230 kV is insufficient, then perform additional studies to reevaluate system operating 500 kV facilities at 500 kV.

7. Determine if a Special Protection Scheme can be utilized to mitigate any remaining single and double contingency overloads.

   a. If a special protection scheme is feasible, develop appropriate remedial action scheme, identify necessary protection requirements and develop cost.

   b. If a special protection scheme is found to be infeasible, identify additional transmission upgrades necessary to mitigate any remaining impacts and develop cost.

8. Evaluate circuit breakers at the seven locations identified in Table 5 and develop costs for any breaker replacements as applicable.

9. Reevaluate single-phase-to-ground and three-phase-to-ground short-circuit duty including transmission upgrades listed in Item 5, review any additional substation locations, and develop cost.

TABLES

Table 6-1
SCE A-Bank Substation Load Forecast (MW)
with 1-in-10 Year Heat Wave Adjustment

Substation	2004	2005	2006	2007	2008	2009	2010
Alamitos	151	152	154	155	157	158	158
Antelope-Bailey	592	602	614	623	634	642	650
Barre	660	669	673	733	756	763	769
Blythe	61	62	63	64	64	65	66
Camino	2	2	2	2	2	2	2
Center	474	480	496	500	505	507	510
Chevmain	51	51	51	51	51	51	51
Chino	649	674	694	712	731	745	761
Cima	2	2	2	2	2	2	2
Del Amo	459	475	485	445	452	455	463
Devers-Mirage	776	800	825	847	872	435	400
Eagle Mt.	5	5	5	5	5	5	5
Eagle Rock	184	186	188	189	191	191	192
Ellis	586	598	609	638	645	649	656
El Nido	336	343	350	357	361	363	367
Etiwanda	544	567	581	595	619	630	644
Ameron	57	57	57	57	57	57	57
Goleta	233	236	239	241	244	245	247
Gould	98	100	101	102	104	104	105
Hinson	455	459	405	408	412	410	411
Johanna	394	402	411	418	425	431	436
Kramer	305	309	312	315	318	329	334
La Cienega	392	399	406	410	416	418	421
La Fresa	647	654	661	666	674	675	679
Laguna Bell	549	552	563	576	577	584	588
Lewis	596	603	616	630	644	656	665
Lighthipe	536	545	612	614	623	629	635
Mesa	535	542	547	552	562	563	566
Mirage	0	0	0	0	0	470	476
Mira Loma	570	596	623	648	666	681	697
Moorpark	595	610	624	636	649	677	806
Oak Valley	0	0	0	0	0	0	173
Olinda	354	360	370	377	381	385	388
Padua	595	603	616	627	643	650	658
Rector	514	526	535	543	552	557	563
Rio Hondo	669	678	682	689	694	697	701
San Bernardino	494	501	514	526	530	539	550
Santa Clara	521	534	544	552	559	562	567
Santiago	957	642	664	692	710	728	749
Saugus	575	594	613	631	649	666	581
Springville	173	176	180	182	186	188	189
Valley	1077	1127	1174	1220	1266	1306	1347
Vestal	175	179	184	188	193	196	201
Victor	515	525	538	547	559	565	573
Viejo	0	361	370	374	381	388	397
Villa Park	689	708	717	721	727	732	740
Vista 66kV	671	690	707	727	745	752	766
Vista 115kV	407	428	441	450	474	494	385
Walnut	626	634	648	657	667	672	680
Total	**20,506**	**20,998**	**21,466**	**21,894**	**22,334**	**22,669**	**23,027**

Table 6-2
SCE A-Bank Substation Load Forecast (MW)
60% of 1-in-10 Year Heat Adjusted Forecast

Substation	2004	2005	2006	2007	2008	2009	2010
Alamitos	91	91	92	93	94	95	95
Antelope-Bailey	355	361	368	374	380	385	390
Barre	396	401	404	440	454	458	461
Blythe	37	37	38	38	38	39	40
Camino	1	1	1	1	1	1	1
Center	284	288	298	300	303	304	306
Chevmain	31	31	31	31	31	31	31
Chino	389	404	416	427	439	447	457
Cima	1	1	1	1	1	1	1
Del Amo	275	285	291	267	271	273	278
Devers-Mirage	466	480	495	508	523	261	240
Eagle Mt.	3	3	3	3	3	3	3
Eagle Rock	110	112	113	113	115	115	115
Ellis	352	359	365	383	387	389	394
El Nido	202	206	210	214	217	218	220
Etiwanda	326	340	349	357	371	378	386
Ameron	34	34	34	34	34	34	34
Goleta	140	142	143	145	146	147	148
Gould	59	60	61	61	62	62	63
Hinson	273	275	243	245	247	246	247
Johanna	236	241	247	251	255	259	262
Kramer	183	185	187	189	191	197	200
La Cienega	235	239	244	246	250	251	253
La Fresa	388	392	397	400	404	405	407
Laguna Bell	329	331	338	346	346	350	353
Lewis	358	362	370	378	386	394	399
Lighthipe	322	327	367	368	374	377	381
Mesa	321	325	328	331	337	338	340
Mirage	0	0	0	0	0	282	286
Mira Loma	342	358	374	389	400	409	418
Moorpark	357	366	374	382	389	406	484
Oak Valley	0	0	0	0	0	0	104
Olinda	212	216	222	226	229	231	233
Padua	357	362	370	376	386	390	395
Rector	308	316	321	326	331	334	338
Rio Hondo	401	407	409	413	416	418	421
San Bernardino	296	301	308	316	318	323	330
Santa Clara	313	320	326	331	335	337	340
Santiago	574	385	398	415	426	437	449
Saugus	345	356	368	379	389	400	349
Springville	104	106	108	109	112	113	113
Valley	646	676	704	732	760	784	808
Vestal	105	107	110	113	116	118	121
Victor	309	315	323	328	335	339	344
Viejo	0	217	222	224	229	233	238
Villa Park	413	425	430	433	436	439	444
Vista 66kV	403	414	424	436	447	451	460
Vista 115kV	244	257	265	270	284	296	231
Walnut	376	380	389	394	400	403	408
Total	**12,304**	**12,599**	**12,880**	**13,136**	**13,400**	**13,601**	**13,816**

Table 7-1
Heavy Summer Power Flow Study Results

Outage Case	Outage Type	Transmission Outage	Overloaded Transmission Facilities	Rating MVA	Rating Amp	Pre-Project Amps	Pre-Project Percent	Post Project Amps	Post Project Percent	Project Impact Amps	Project Impact Percent
0	None	Base Case	Antelope-Cottonwind 230 kV	494	1240	1203	97.0%	1261	101.7%	58	4.7%
			Antelope-Mesa 230 kV	357	895	996	111.3%	1026	114.7%	31	3.4%
6	Single	Pardee-Pastoria 230 kV	**Pardee**-Pastoria-Warne 230 kV	494	1240	1331	107.4%	1470	118.6%	139	11.2%
7	Single	Bailey-Pastoria 230 kV	**Pardee**-Pastoria-Warne 230 kV	494	1240	1370	110.5%	1513	122.0%	142	11.5%
			Antelope-Cottonwind 230 kV	494	1240	1370	110.5%	1435	115.7%	65	5.2%
8	Single	Bailey-Pardee 230 kV	**Pardee**-Pastoria-Warne 230 kV	494	1240	1300	104.8%	1437	115.8%	137	11.0%
14	Single	Antelope-Cottonwind 230 kV	**Pardee**-Pastoria-Warne 230 kV	494	1240	1281	103.3%	1398	112.7%	116	9.4%
			Antelope-Magunden No. 1 230 kV	357	895	1028	114.9%	1097	122.6%	69	7.7%
15	Single	Antelope-Magunden No. 1 230kV	Antelope-Cottonwind 230 kV	494	1240	1418	114.3%	1493	120.4%	75	6.0%
19	Single	New Antelope-Vincent 230 kV	Existing Vincent-Antelope 230 kV	494	1240	1268	102.3%	1350	108.9%	82	6.6%
21	Single	Mesa-Vincent 230 kV	Mesa-Antelope 230 kV	357	895	1167	130.4%	1202	134.3%	35	3.9%
27	Single	Eagle Rock-Mesa 230 kV	Antelope-Mesa 230 kV	357	895	1133	126.6%	1169	130.6%	36	4.1%
41	Double	Pardee-Pastoria 230 kV Pardee-Pastoria-Warne 230 kV	Bailey-Pastoria 230 kV	598	1500	1982	132.2%	2210	147.3%	227	15.2%
			Bailey-Pardee 230 kV	598	1500	1764	117.6%	1972	131.5%	208	13.9%
			Antelope-Magunden No. 1 230 kV	357	895	996	111.3%	1092	122.0%	96	10.8%
			Antelope-Cottonwind 230 kV	494	1240	1598	128.8%	1705	137.5%	108	8.7%
42	Double	Bailey-Pastoria-230 kV Pardee-Pastoria-Warne 230 kV	Pardee-Pastoria 230 kV	598	1500	1898	126.5%	2118	141.2%	221	14.7%
			Antelope-Magunden No. 1 230 kV	357	895	1037	115.9%	1139	127.2%	101	11.3%
			Antelope-Cottonwind 230 kV	494	1240	1641	132.3%	1754	141.4%	112	9.1%
43	Double	Bailey-Pastoria 230 kV Pardee-Pastoria 230 kV	**Pardee**-Pastoria-Warne 230 kV	494	1240	2086	168.2%	2315	186.7%	229	18.5%
			Pardee-**Pastoria**-Warne 230 kV	494	1240	1885	152.0%	2111	170.2%	226	18.2%
			Antelope-Magunden No. 1 230 kV	357	895	1055	117.9%	1157	129.3%	102	11.4%
			Antelope-Cottonwind 230 kV	494	1240	1659	133.8%	1771	142.8%	112	9.1%
44	Double	Bailey-Pardee 230 kV Pardee-Pastoria-Warne 230 kV	Pardee-Pastoria 230 kV	598	1500	1763	117.6%	1969	131.3%	206	13.7%
			Antelope-Magunden No. 1 230 kV	357	895	966	107.9%	1059	118.3%	93	10.4%
			Antelope-Cottonwind 230 kV	494	1240	1566	126.3%	1670	134.7%	104	8.3%

Table 7-1
Heavy Summer Power Flow Study Results

Outage Case	Outage Type	Transmission Outage	Overloaded Transmission Facilities	Rating MVA	Rating Amp	Pre-Project Amps	Pre-Project Percent	Post Project Amps	Post Project Percent	Project Impact Amps	Project Impact Percent
45	Double	Bailey-Pardee 230 kV Pardee-Pastoria 230kV	**Pardee**-Pastoria-Warne 230 kV	494	1240	1944	156.8%	2158	174.0%	214	17.3%
			Pardee-**Pastoria**-Warne 230 kV	494	1240	1744	140.6%	1955	157.7%	211	17.0%
			Antelope-Magunden No. 1 230 kV	357	895	983	109.8%	1076	120.2%	93	10.4%
			Antelope-Cottonwind 230 kV	458	1240	1583	127.7%	1687	136.0%	104	8.3%
50	Double	Antelope-Magunden No. 1 230 kV Cottonwind-Magunden 230kV	**Pardee**-Pastoria-Warne 230 kV	494	1240	1367	110.3%	1507	121.5%	140	11.3%
			Bailey-Pastoria 230 kV	598	1500	1376	91.7%	1522	101.5%	146	9.7%
51	Double	Antelope-Cottonwind 230 kV Antelope-Magunden No. 1 230 kV	**Pardee**-Pastoria-Warne 230 kV	494	1240	1631	131.5%	1775	143.1%	144	11.6%
			Pardee-**Pastoria**-Warne 230 kV	494	1240	1430	115.3%	1571	126.7%	141	11.4%
			Bailey-Pastoria 230 kV	598	1500	1662	110.8%	1812	120.8%	151	10.0%
			Pardee-Pastoria 230 kV	598	1500	1478	98.5%	1615	107.7%	137	9.1%
			Bailey-Pardee 230 kV	598	1500	1402	93.5%	1534	102.3%	132	8.8%
53	Double	New Antelope-Vincent 230 kV Antelope-Mesa 230 kV	Existing Antelope-Vincent 230 kV	494	1240	1825	147.2%	1926	155.3%	101	8.2%
54	Double	Existing Antelope-Vincent 230 kV New Antelope-Vincent 230 kV	Antelope-Mesa 230 kV	357	895	1400	156.4%	1457	162.8%	57	6.4%
55	Double	Rio Hondo-Vincent No. 1 230 kV Antelope-Mesa 230 kV	Mesa-Vincent 230 kV	956	2400	2460	102.5%	2512	104.7%	52	2.2%
56	Double	Rio Hondo-Vincent No. 2 230 kV Antelope-Mesa 230 kV	Mesa-Vincent 230 kV	956	2400	2452	102.2%	2504	104.3%	51	2.1%
57	Double	Rio Hondo-Vincent No. 1 230 kV Rio Hondo-Vincent No. 2 230 kV	Antelope-Mesa 230 kV	357	895	1323	147.8%	1360	152.0%	38	4.2%
			Mesa-Vincent 230 kV	956	2400	2844	118.5%	2905	121.0%	61	2.6%
58	Double	Gould-Sylmar 230 kV Eagle Rock-Sylmar S 230 kV	Eagle Rock-Pardee 230 kV	494	1240	1387	111.8%	1432	115.5%	45	3.6%
59	Double	Lugo-Vincent No. 1 500 kV Lugo-Vincent No. 2 500 kV	Failed to converge								

Table 7-2
Light Spring (with Ventura Gen) Power Flow Study Results
Stressing the Antelope leg of the Big Creek Corridor

Outage Case	Transmission Outage	Trasmission Overloaded Facilities	Rating		Pre Project		Post Project		Project Impact	
			MVA	Amps	Amps	Percent	Amps	Percent	Amps	Percent
0	Base Case	Antelope-Cottonwind 230 kV	494	1240	1332	107.4%	1389	112.0%	57	4.6%
		Antelope-Mesa 230 kV	357	895	994	111.0%	1023	114.3%	29	3.3%
5	Pardee-Pastoria-Warne 230 kV	Bailey-Pastoria 230 kV	598	1500	1553	103.5%	1696	113.0%	143	9.5%
		Pardee-Pastoria 230 kV	598	1500	1466	97.7%	1600	106.6%	134	8.9%
		Bailey-Pardee 230 kV	598	1500	1436	95.7%	1566	104.4%	131	8.7%
		Antelope-Magunden No. 1 230 kV	357	895	896	100.1%	960	107.3%	64	7.2%
6	Pardee-Pastoria 230 kV	Antelope-Cottonwind 230 kV	494	1240	1495	120.6%	1712	138.1%	217	17.5%
		Pardee-Pastoria-Warne 230 kV	494	1240	1631	131.6%	1772	142.9%	141	11.4%
		Bailey-Pardee 230 kV	494	1240	1449	116.9%	1580	127.4%	131	10.6%
		Pardee-**Pastoria**-Warne 230 kV	494	1240	1437	115.9%	1567	126.3%	130	10.4%
		Antelope-Magunden No. 1 230 kV	357	895	909	101.6%	974	108.8%	65	7.2%
7	Bailey-Pastoria 230 kV	**Pardee**-Pastoria-Warne 230 kV	494	1240	1655	133.4%	1798	145.0%	144	11.6%
		Pardee-**Pastoria**-Warne 230 kV	494	1240	1460	117.7%	1587	127.9%	127	10.2%
		Pardee-Pastoria 230 kV	598	1500	1502	100.1%	1639	109.3%	137	9.1%
		Antelope-Magunden No. 1 230 kV	357	895	927	103.6%	994	111.1%	67	7.5%
		Antelope-Cottonwind 230 kV	494	1240	1513	122.0%	1601	129.1%	88	7.1%
8	Bailey-Pardee 230 kV	**Pardee**-Pastoria-Warne 230 kV	494	1240	1602	129.2%	1741	140.4%	139	11.2%
		Pardee-**Pastoria**-Warne 230 kV	494	1240	1408	113.5%	1544	124.5%	137	11.0%
		Pardee-Pastoria 230 kV	598	1500	1451	96.8%	1584	105.6%	133	8.8%
		Antelope-Magunden No. 1 230 kV	357	895	893	99.8%	957	106.9%	64	7.1%
13	Magunden-Cottonwind 230 kV	**Pardee**-Pastoria-Warne 230 kV	494	1240	1356	109.4%	1471	118.6%	115	9.2%
		Antelope-Magunden No. 1 230 kV	357	895	945	105.6%	1012	113.1%	67	7.5%
14	Antelope-Conttonwind 230 kV	Bailey-Pastoria 230 kV	494	1240	1492	120.3%	1614	130.1%	122	9.8%
		Pardee-Pastoria-Warne 230 kV	494	1240	1537	123.9%	1655	133.5%	118	9.5%
		Pardee-**Pastoria**-Warne 230 kV	494	1240	1341	108.2%	1457	117.5%	116	9.3%
		Bailey-Pardee 230 kV	494	1240	1350	108.9%	1459	117.7%	109	8.8%
		Antelope-Magunden No. 1 230 kV	357	895	1197	133.7%	1266	141.4%	69	7.7%
		Pardee-Pastoria 230 kV	598	1500	1388	92.5%	1501	100.1%	113	7.5%

Table 7-2
Light Spring (with Ventura Gen) Power Flow Study Results
Stressing the Antelope leg of the Big Creek Corridor

Outage Case	Transmission Outage	Trasmission Overloaded Facilities	Rating		Pre Project		Post Project		Project Impact	
			MVA	Amps	Amps	Percent	Amps	Percent	Amps	Percent
15	Antelope-Magunden No. 1 230 kV	Bailey-Pastoria 230 kV	494	1240	1340	108.1%	1456	117.4%	116	9.4%
		Pardee-Pastoria-Warne 230 kV	494	1240	1394	112.4%	1508	121.6%	113	9.1%
		Antelope-Cottonwind 230 kV	494	1240	1581	127.5%	1652	133.2%	72	5.8%
19	New Antelope-Vincent 230 kV	Existing Antelope-Vincent 230 kV	494	1240	1495	120.6%	1572	126.8%	77	6.2%
		Antelope-Mesa 230 kV	357	895	1126	125.8%	1160	129.6%	34	3.8%
21	Mesa-Vincent 230 kV	Antelope-Mesa 230 kV	357	895	1137	127.0%	1168	130.5%	31	3.5%
38	Magunden-Pastoria No. 1 230 kV Magunden-Pastoria No. 2 230 kV	Antelope-Magunden No. 1 230 kV	357	895	928	103.7%	965	107.8%	37	4.1%
39	Magunden-Pastoria No. 1 230 kV Magunden-Pastoria No.3 230 kV	Antelope-Magunden No.1 230 kV	357	895	931	104.0%	968	108.1%	37	4.1%
40	Magunden-Pastoria No. 2 230 kV Magunden-Pastoria No. 3 230 kV	Antelope-Magunden No.1 230 kV	357	895	931	104.0%	968	108.1%	37	4.1%
41	Pardee-Pastoria 230 kV Pardee-Pastoria-Warne 230 kV	Bailey-Pastoria 230 kV	494	1240	2425	195.6%	2663	214.7%	237	19.1%
		Bailey-Pardee 230 kV	494	1240	2250	181.4%	2466	198.9%	217	17.5%
		Antelope-Magunden No. 1 230 kV	357	895	1227	137.0%	1327	148.3%	100	11.2%
		Antelope-Cottonwind 230 kV	494	1240	1838	148.2%	1950	157.2%	112	9.0%
42	Bailey-Pastoria 230 kV Pardee-Pastoria-Warne 230 kV	Pardee-Pastoria 230 kV	598	1500	2348	156.5%	2579	171.9%	231	15.4%
		Antelope-Magunden No. 1 230 kV	357	895	1264	141.2%	1370	153.0%	106	11.9%
		Antelope-Cottonwind 230 kV	494	1240	1875	151.2%	1993	160.8%	118	9.5%
43	Bailey-Pastoria 230 kV Pardee-Pastoria 230 kV	**Pardee**-Pastoria-Warne 230 kV	494	1240	2555	206.0%	2801	225.9%	246	19.9%
		Pardee-**Pastoria**-Warne 230 kV	494	1240	2353	189.8%	2595	209.3%	242	19.5%
		Antelope-Magunden No. 1 230 kV	357	895	1279	142.9%	1387	155.0%	108	12.1%
		Antelope-Cottonwind 230 kV	494	1240	1891	152.5%	2012	162.3%	121	9.8%
44	Bailey-Pardee 230 kV Pardee-Pastoria-Warne 230 kV	Pardee-Pastoria 230 kV	598	1500	2230	148.7%	2443	162.9%	213	14.2%
		Antelope-Magunden No. 1 230 kV	357	895	1194	133.4%	1289	144.0%	96	10.7%
		Antelope-Cottonwind 230 kV	494	1240	1805	145.5%	1911	154.1%	106	8.6%
45	Bailey-Pardee 230 kV Pardee-Pastoria 230kV	**Pardee**-Pastoria-Warne 230 kV	494	1240	2430	196.0%	2655	214.1%	225	18.2%
		Pardee-**Pastoria**-Warne 230 kV	494	1240	2230	179.8%	2451	197.7%	221	17.9%
		Antelope-Magunden No. 1 230 kV	357	895	1208	135.0%	1305	145.8%	97	10.8%
		Antelope-Cottonwind 230 kV	494	1240	1820	146.7%	1928	155.5%	108	8.7%

Table 7-2
Light Spring (with Ventura Gen) Power Flow Study Results
Stressing the Antelope leg of the Big Creek Corridor

Outage Case	Transmission Outage	Trasmission Overloaded Facilities	Rating		Pre Project		Post Project		Project Impact	
			MVA	Amps	Amps	Percent	Amps	Percent	Amps	Percent
50	Antelope-Magunden No.1 230 kV Cottonwind-Magunden 230kV	Bailey-Pastoria 230 kV	494	1240	1647	132.8%	1792	144.5%	146	11.8%
		Pardee-Pastoria-Warne 230 kV	494	1240	1682	135.6%	1823	147.0%	141	11.3%
		Pardee-**Pastoria**-Warne 230 kV	494	1240	1486	119.8%	1624	131.0%	138	11.1%
		Bailey-Pardee 230 kV	494	1240	1483	119.6%	1613	130.0%	129	10.4%
		Pardee-Pastoria 230 kV	598	1500	1527	101.8%	1662	110.8%	134	8.9%
51	Antelope-Cottonwind 230 kV Antelope-Magunden No. 1 230 kV	Bailey-Pastoria 230 kV	494	1240	1939	156.4%	2088	168.4%	149	12.0%
		Pardee-Pastoria-Warne 230 kV	494	1240	1956	157.7%	2099	169.3%	143	11.6%
		Pardee-**Pastoria**-Warne 230 kV	494	1240	1756	141.6%	1897	153.0%	141	11.4%
		Bailey-Pardee 230 kV	494	1240	1731	139.6%	1862.8	150.2%	132	10.6%
		Pardee-Pastoria 230 kV	598	1500	1788	119.2%	1925	128.3%	137	9.1%
		Existing Antelope-Vincent 230 kV	494	1240	2059	166.1%	2158	174.0%	99	7.9%
54	Existing Antelope-Vincent 230 kV New Antelope-Vincent 230 kV	**Pardee**-Pastoria-Warne 230 kV	494	1240	1395	112.5%	1510	121.8%	115	9.3%
		Antelope-Mesa 230 kV	357	895	1466	163.8%	1520	169.8%	54	6.0%
57	Rio Hondo-Vincent No. 1 230 kV Rio Hondo-Vincent No. 2 230 kV	Mesa-Vincent 230 kV	956	2400	2562	106.7%	2614	108.9%	52	2.2%
59	Lugo-Vincent No. 1 500 kV Lugo-Vincent No. 2 500 kV	Failure to converge								

Table 7-3
Light Spring NoVgen Power Flow Study Results
Stressing the Pardee leg of the Big Creek corridor (NoVgen)

Outage Case	Outage Type	Transmission Outage	Overloaded Transmission Facilities	Rating MVA	Rating Amps	Pre-Project Amps	Pre-Project Percent	Post-Project Amps	Post-Project Percent	Project Impact Amps	Project Impact Percent
0	Single	Base Case	**Pardee**-Pastoria-Warne 230 kV	494	1240	1255	101.2%	1360	109.7%	106	8.5%
			Antelope-Cottonwind 230 kV	494	1240	1294	104.4%	1354	109.2%	60	4.8%
			Antelope-Mesa 230 kV	357	895	954	106.5%	984	109.9%	31	3.4%
5	Single	Pardee-Pastoria-Warne 230 kV	Bailey-Pastoria 230 kV	598	1500	1584	105.6%	1729	115.3%	146	9.7%
			Pardee-Pastoria 230 kV	598	1500	1502	100.1%	1639	109.2%	137	9.1%
			Bailey-Pardee 230 kV	598	1500	1475	98.3%	1608	107.2%	133	8.9%
6	Single	Pardee-Pastoria 230 kV	**Pardee**-Pastoria-Warne 230 kV	494	1240	1670	134.7%	1809	145.9%	139	11.2%
			Pardee-**Pastoria**-Warne 230 kV	494	1240	1475	118.9%	1611	129.9%	137	11.0%
			Bailey-Pastoria 230 kV	598	1500	1600	106.7%	1742	116.1%	141	9.4%
			Bailey-Pardee 230 kV	598	1500	1488	99.2%	1618	107.9%	129	8.6%
			Antelope-Cottonwind 230 kV	494	1240	1465	118.1%	1536	123.8%	71	5.7%
7	Single	Bailey-Pastoria 230 kV	**Pardee**-Pastoria-Warne 230 kV	494	1240	1691	136.4%	1838	148.2%	147	11.8%
			Pardee-**Pastoria**-Warne 230 kV	494	1240	1495	120.6%	1639	132.2%	144	11.6%
			Pardee-Pastoria 230 kV	598	1500	1537	102.4%	1676	111.8%	140	9.3%
			Antelope-Magunden No. 1 230 kV	357	895	897	100.2%	965	107.8%	68	7.6%
			Antelope-Cottonwind 230 kV	494	1240	1482	119.5%	1559	125.7%	77	6.2%
8	Single	Bailey-Pardee 230 kV	**Pardee**-Pastoria-Warne 230 kV	494	1240	1641	132.3%	1781	143.7%	141	11.4%
			Pardee-**Pastoria**-Warne 230 kV	494	1240	1445	116.6%	1584	127.7%	138	11.1%
			Pardee-Pastoria 230 kV	598	1500	1488	99.2%	1623	108.2%	134	8.9%
13	Single	Cottonwind-Magunden 230 kV	**Pardee**-Pastoria-Warne 230 kV	494	1240	1376	110.9%	1492	120.3%	116	9.4%
			Pardee-**Pastoria**-Warne 230 kV	494	1240	1182	95.3%	1296	104.5%	114	9.2%
			Antelope-Magunden No. 1 230 kV	357	895	900	100.5%	967	108.1%	67	7.5%
14	Single	Antelope-Cottonwind 230 kV	**Pardee**-Pastoria-Warne 230 kV	494	1240	1558	125.7%	1673	134.9%	115	9.3%
			Pardee-**Pastoria**-Warne 230 kV	494	1240	1361	109.8%	1475	119.0%	114	9.2%
			Bailey-Pastoria 230 kV	598	1500	1505	100.3%	1624	108.2%	119	7.9%
			Antelope-Magunden No. 1 230 kV	357	895	1153	128.9%	1219	136.2%	65	7.3%
			Pardee-Pastoria 230 kV	598	1500	1408	93.9%	1518	101.2%	110	7.3%
15	Single	Antelope-Magunden No. 1 230 kV	**Pardee**-Pastoria-Warne 230 kV	494	1240	1414	114.1%	1531	123.4%	116	9.4%
			Pardee-**Pastoria**-Warne 230 kV	494	1240	1220	98.4%	1334	107.6%	114	9.2%
			Antelope-Cottonwind 230 kV	494	1240	1534	123.7%	1607	129.6%	74	6.0%
21	Single	Mesa-Vincent 230 kV	Antelope-Mesa 230 kV	357	895	1095	122.4%	1127	125.9%	32	3.6%
41	Double	Pardee-Pastoria 230 kV Pardee-Pastoria-Warne 230 kV	Bailey-Pastoria 230 kV	598	1500	2478	165.2%	2709	180.6%	231	15.4%
			Bailey-Pardee 230 kV	598	1500	2310	154.0%	2521	168.1%	211	14.1%
			Antelope-Magunden No. 1 230 kV	357	895	1207	134.9%	1303	145.6%	96	10.7%
			Antelope-Cottonwind 230 kV	494	1240	1820	146.8%	1923	155.1%	103	8.3%

Table 7-3
Light Spring NoVgen Power Flow Study Results
Stressing the Pardee leg of the Big Creek corridor (NoVgen)

Outage Case	Outage Type	Transmission Outage	Overloaded Transmission Facilities	Rating MVA	Rating Amps	Pre-Project Amps	Pre-Project Percent	Post-Project Amps	Post-Project Percent	Project Impact Amps	Project Impact Percent
42	Double	Bailey-Pastoria 230 kV Pardee-Pastoria-Warne 230 kV	Antelope-Cottonwind 230 kV	494	1240	1851	149.3%	2626	211.8%	775	62.5%
			Pardee-Pastoria 230 kV	598	1500	2398	159.9%	2626.2	175.1%	228	15.2%
			Antelope-Magunden No. 1 230 kV	357	895	1241	138.6%	1345	150.2%	104	11.6%
43	Double	Bailey-Pastoria 230 kV Pardee-Pastoria 230 kV	**Pardee**-Pastoria-Warne 230 kV	598	1240	2615	210.8%	2849	229.7%	234	18.9%
			Pardee-**Pastoria**-Warne 230 kV	494	1240	2410	194.4%	2643	213.1%	233	18.8%
			Antelope-Magunden No. 1 230 kV	357	895	1261	140.8%	1362	152.2%	101	11.3%
			Antelope-Cottonwind 230 kV	494	1240	1874	151.1%	1983	159.9%	109	8.8%
50	Double	Antelope-Magunden No. 1 230 kV Cottonwind-Magunden 230kV	**Pardee**-Pastoria-Warne 230 kV	494	1240	1688	136.1%	1826	147.2%	138	11.1%
			Bailey-Pastoria 230 kV	598	1500	1643	109.6%	1786	119.1%	143	9.5%
			Pardee-**Pastoria**-Warne 230 kV	494	1240	1491	120.3%	1627	131.2%	136	11.0%
			Bailey-Pardee 230 kV	598	1500	1493	99.5%	1620	108.0%	127	8.5%
			Pardee-Pastoria 230 kV	598	1500	1533	102.2%	1665	111.0%	132	8.8%
51	Double	Antelope-Cottonwind 230 kV Antelope-Magunden No. 1 230 kV	Bailey-Pastoria 230 kV	598	1500	1933	128.8%	2102	140.1%	169	11.3%
			Pardee-Pastoria-Warne 230 kV	494	1240	1959	158.0%	2121	171.0%	162	13.0%
			Pardee-**Pastoria**-Warne 230 kV	494	1240	1759	141.9%	1914	154.4%	155	12.5%
			Bailey-Pardee 230 kV	598	1500	1739	115.9%	1884.6	125.6%	146	9.7%
			Pardee-Pastoria 230 kV	598	1500	1792	119.4%	1944	129.6%	153	10.2%
53	Double	New Antelope-Vincent 230 kV Mesa-Antelope 230 kV	Existing Antelope-Vincent 230 kV	494	1240	1859	149.9%	1957	157.8%	98	7.9%
54	Double	Existing Antelope-Vincent 230 kV New Antelope-Vincent 230 kV	**Pardee**-Pastoria-Warne 230 kV	494	1240	1405	113.3%	1516	122.2%	110	8.9%
			Pardee-**Pastoria**-Warne 230 kV	494	1240	1208	97.4%	1317	106.2%	109	8.8%
			Antelope-Mesa 230 kV	357	895	1373	153.4%	1421	158.7%	48	5.4%
57	Double	Rio Hondo-Vincent No. 1 230 kV Rio Hondo-Vincent No. 2 230 kV	Mesa -Vincent 230 kV	956	2400	2528	105.3%	2582	107.6%	54	2.3%
44	Double	Bailey-Pardee 230 kV Pardee-Pastoria-Warne 230 kV	Failed to converge								
45	Double	Bailey-Pardee 230 kV Pardee-Pastoria 230kV	Failed to converge								
59	Double	Lugo-Vincent No. 1 230 kV Lugo-Vincent No. 2 230 kV	Failed to converge								

APPENDIX A

HEAVY SUMMER POWER FLOW PLOTS

APPENDIX A

HEAVY SUMMER POWER FLOW PLOTS

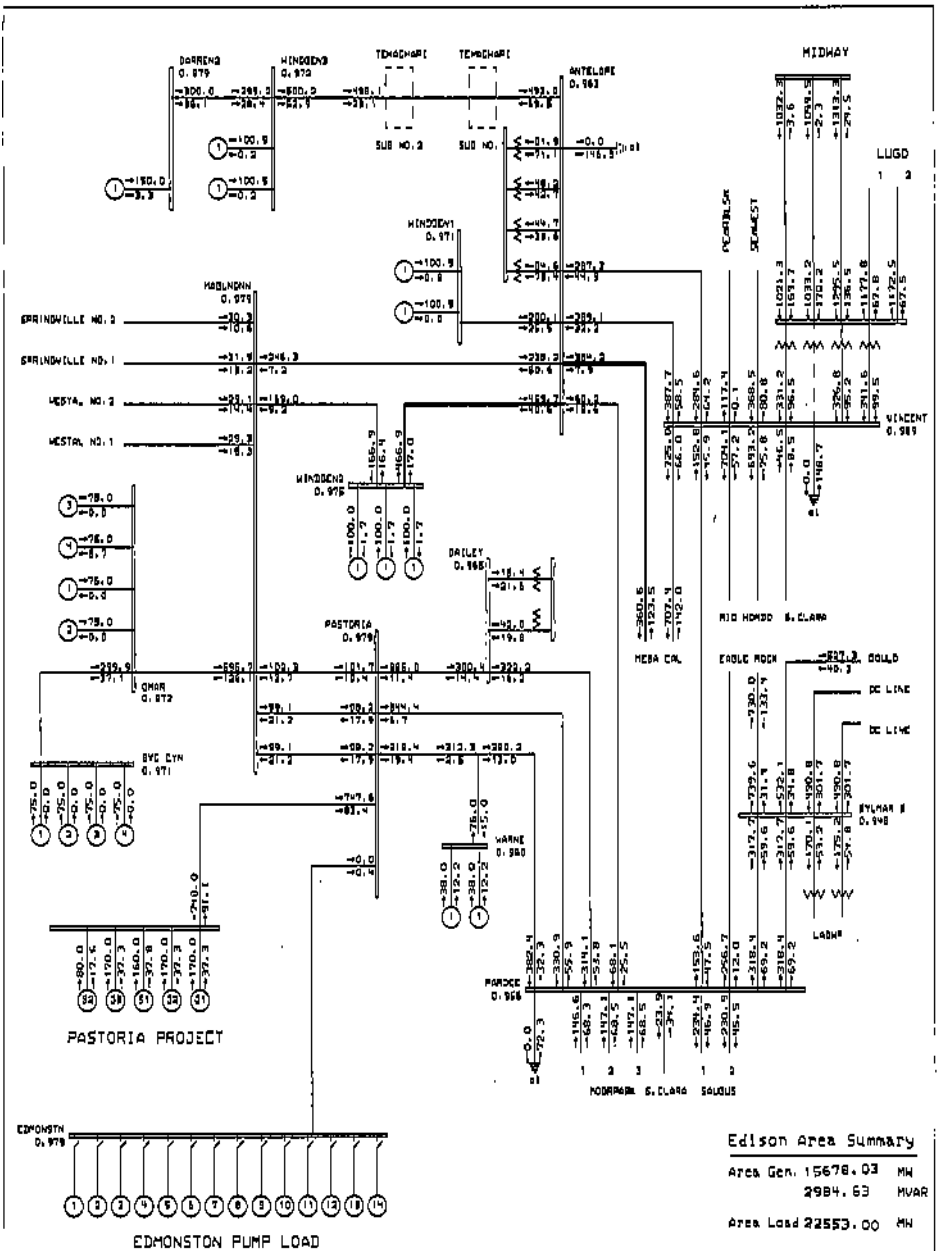

Edison Area Summary

Area Gen. 15678.03 MW
2984.63 MVAR

Area Load 22553.00 MW

BIG CREEK CORRIDOR

230 SYSTEM

General Electric International, Inc. PSLF Program

PSAVER Tue May 03 12:13:43 2005

GENERAL ELECTRIC COMPANY

DALPINE PASTORIA ADDITION - SYSTEM IMPACT STUDY
PROPOSED IN-SERVICE DATE: JULY 2006
CASE STUDY 1: HEAVY SUMMER PRE-PROJECT

H-CC BASE CASE

c:\ge\pf13\calpine\jet expand
c:\ge\pf13\calpine\jet expand
Rating = 1

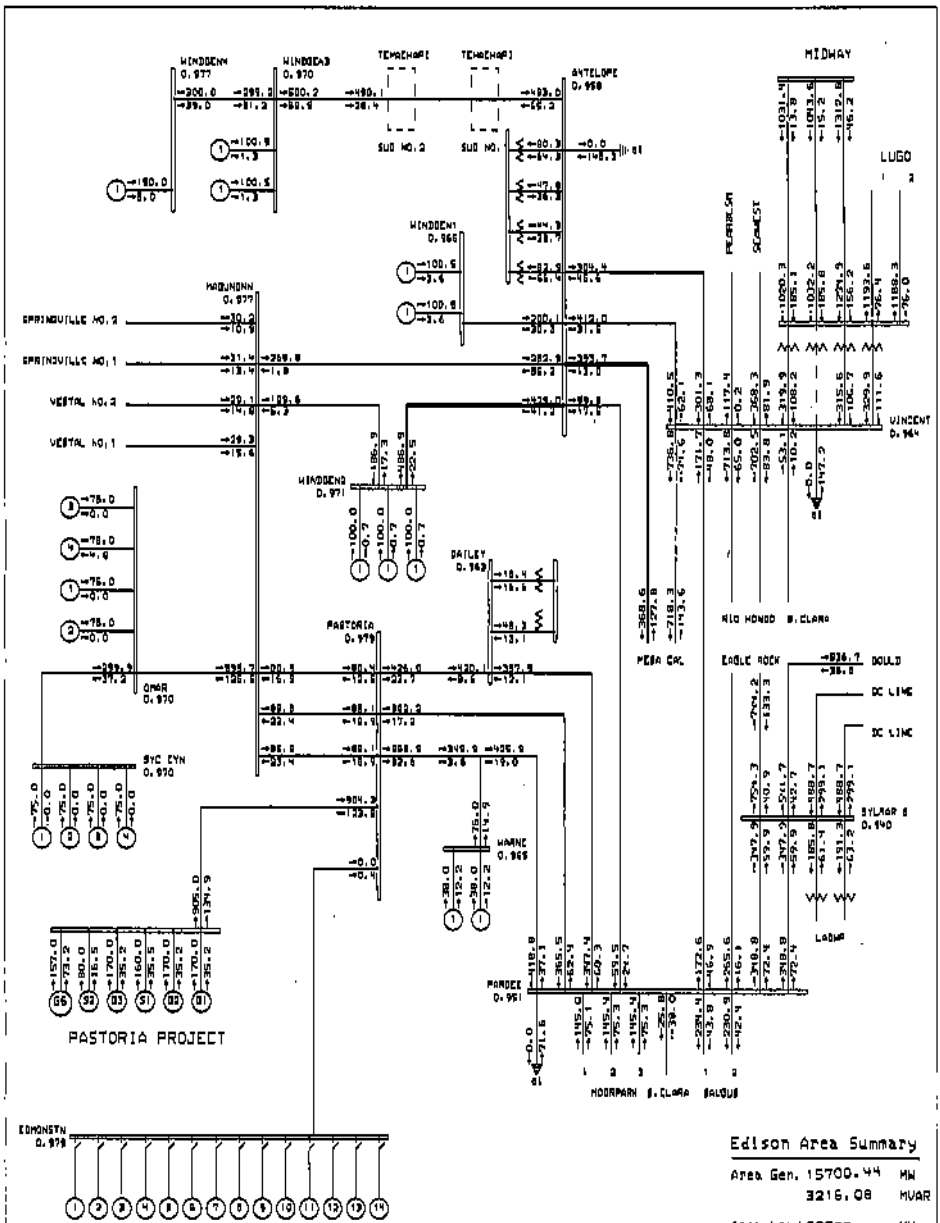

Edison Area Summary

Area Gen. 15700.44 MW
3216.08 MVAR

Area Load 22553.00 MW

BIG CREEK CORRIDOR
230 SYSTEM

KGW/MAP Sat May 03 15:11:58 2005

General Electric International, Inc. PSLF Program

GENERAL ELECTRIC COMPANY

CALPINE PASTORIA ADDITION - SYSTEM IMPACT STUDY
PROPOSED IN-SERVICE DATE: JULY 2006
CASE STUDY: HEAVY SUMMER POST- PROJECT

N-0: BASE CASE

c:\pslf\17\ckl\pnc\per expand
c:\pslf\17\ckl\pnc\per expand
Rating = 1

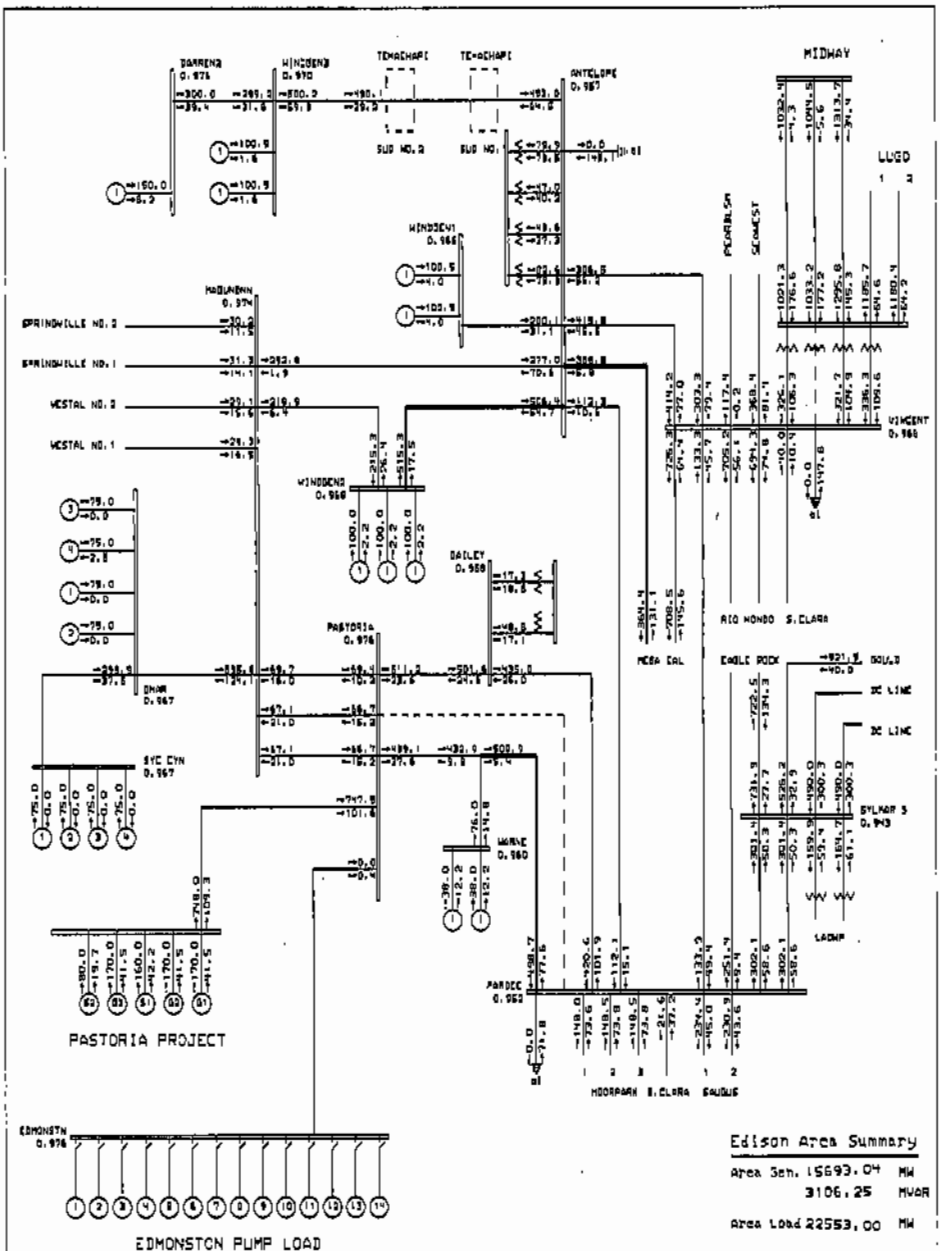
DARRENB 0.974
WINDBENB 0.970
TEHACHAPI
TEHACHAPI
ANTELOPE 0.987
MIDWAY
LUGO
SUB NO. 2
SUB NO. 1
WINDBENH 0.968
PEARBLSM
SCHMCST
HADLYBNH 0.974
SPRINGVILLE NO. 2
SPRINGVILLE NO. 1
VESTAL NO. 2
VESTAL NO. 1
WINDBENB 0.960
VINCENT 0.968
DAILEY 0.968
PASTORIA 0.976
RIO HONDO
S.CLARA
MESA CAL
EAGLE ROCK
SOULD
DC LINE
DC LINE
DHAR 0.967
SYC CYN 0.967
SYLMAR S 0.943
LADWP
WARNE 0.960
PARDEE 0.952
HOORPARK
S.CLARA
SAUGUS
PASTORIA PROJECT
EDMONSTN 0.976
EDMONSTON PUMP LOAD
Edison Area Summary
Area Gen. 15693.04 MW
3106.25 MVAR
Area Load 22553.00 MW
BIG CREEK CORRIDOR
230 SYSTEM
General Electric International, Inc. PSLF Program
GENERAL ELECTRIC COMPANY
CALPINE PASTORIA ADDITION - SYSTEM IMPACT STUDY
PROPOSED IN-SERVICE DATE: 2 JULY 2008
CASE STUDY 1: HEAVY SUMMER PRE-PROJECT
N-1: PARDEE-PASTORIA 230KV
Rating = 1

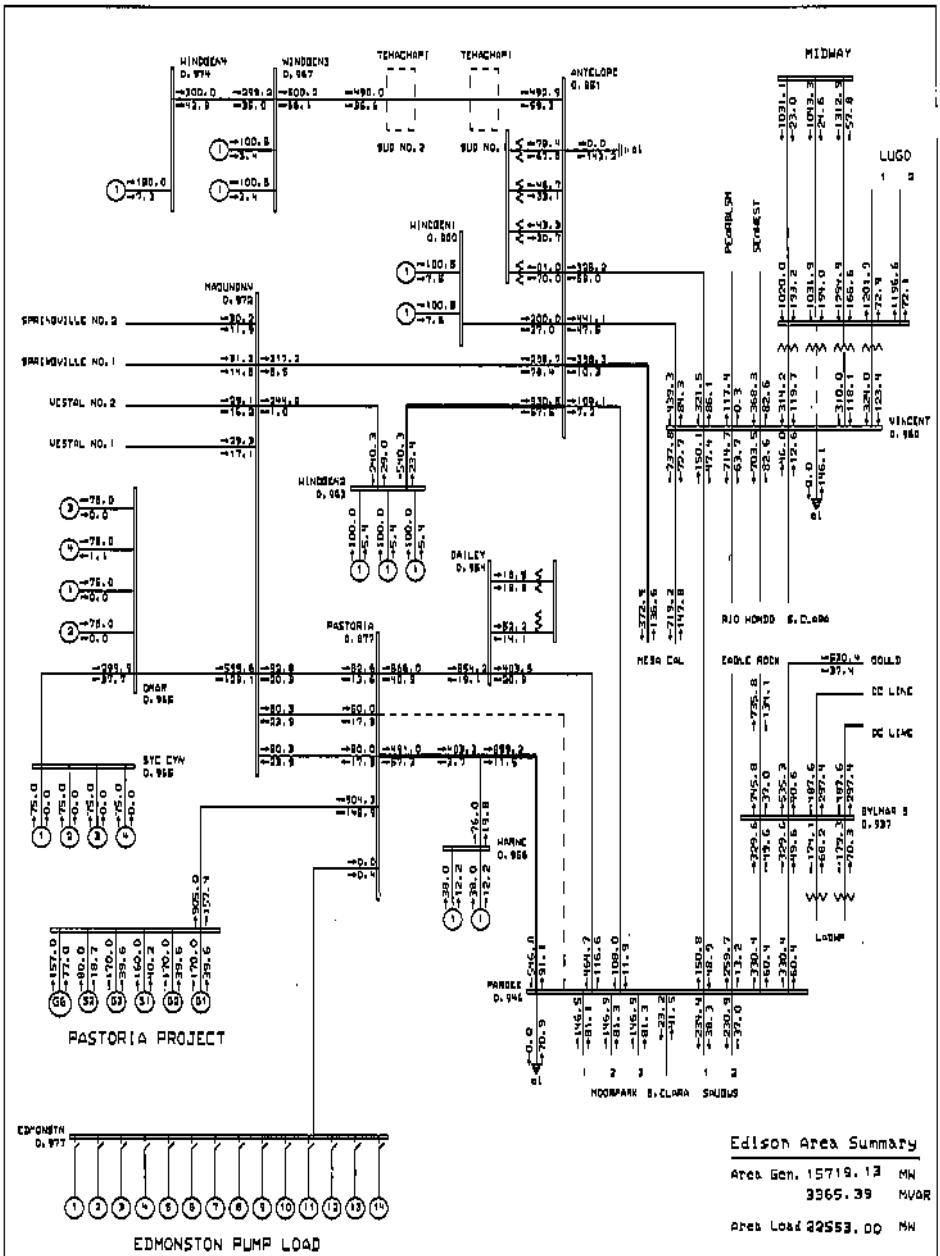
WINDGEN4
WINDGEN3
TEHACHAPI
TEHACHAPI
ANTELOPE
MIDWAY
LUGO
SUB NO. 2
SUB NO. 1
WINDGEN1
MAGUNDEN
SPRINGVILLE NO. 2
SPRINGVILLE NO. 1
VESTAL NO. 2
VESTAL NO. 1
WINDGEN2
DAILEY
PASTORIA
OMAR
SYC CYN
HARNE
PANDOE
MOOMPARK
S.CLARA
SAUGUS
PCGRBLSM
SCHAEST
VINCENT
RIO HONDO
MESA CAL
EAGLE ROCK
GOLLD
DC LINE
DC LINE
SYLMAR S
LOSMP
EDMONSTN
PASTORIA PROJECT
EDMONSTON PUMP LOAD
Edison Area Summary
Area Gen. 15719.13 MW
3365.39 MVAR
Area Load 22553.00 MW
BIG CREEK CORRIDOR
230 SYSTEM
General Electric International, Inc. PSLF Program
GENERAL ELECTRIC COMPANY
CALPINE PASTORIA ADDITION - SYSTEM IMPACT STUDY
PROPOSED IN-SERVICE DATE: JULY 2006
CASE STUDY: HEAVY SUMMER POST- PROJECT
N-1: PANDOE-PASTORIA 230 KV

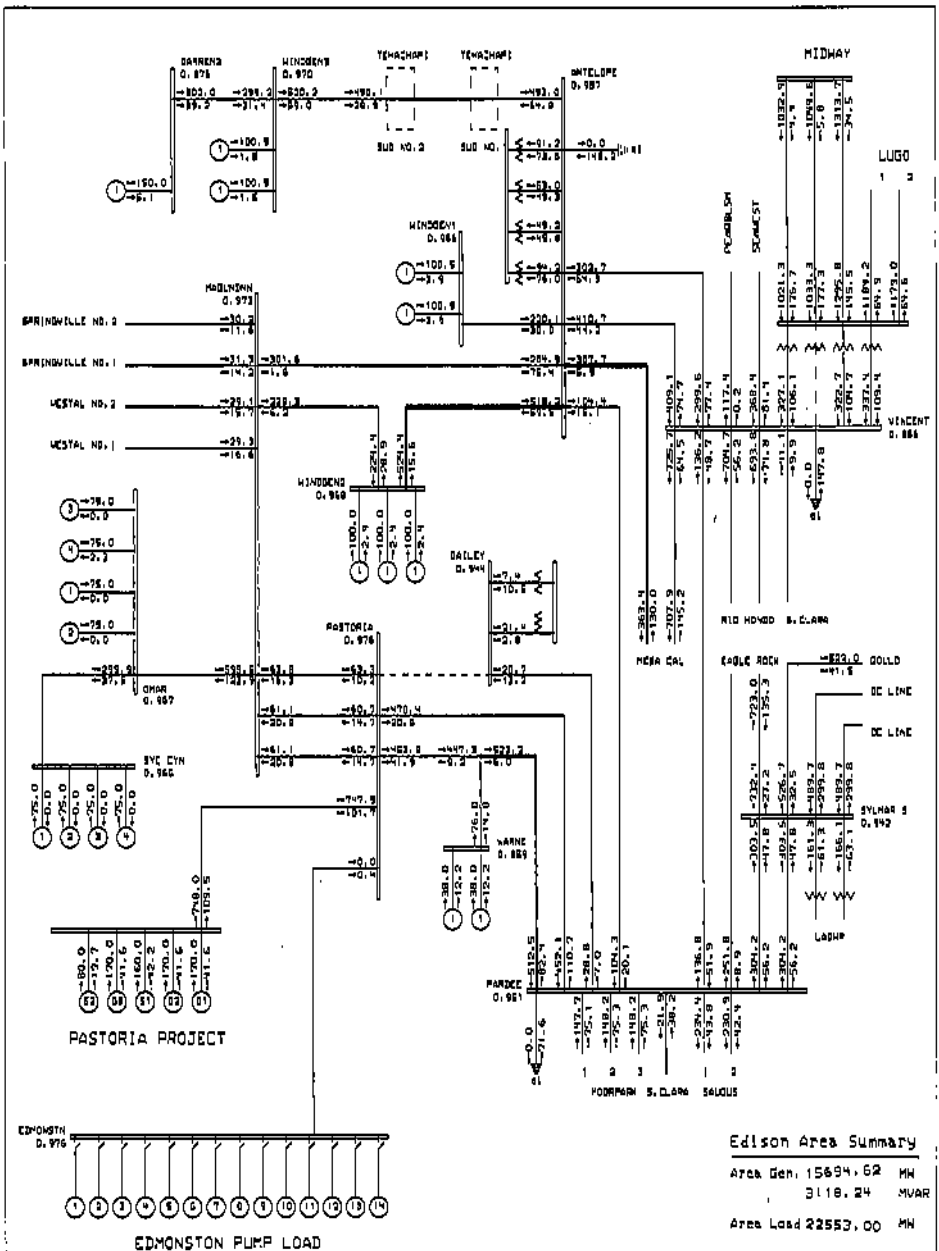

Edison Area Summary

Area Gen. 15694.62 MW
3118.24 MVAR

Area Load 22553.00 MW

BIG CREEK CORRIDOR
230 SYSTEM

MW/MVAR Tue May 03 12:25:41 2005

General Electric International, Inc. PSLF Program

GENERAL ELECTRIC COMPANY

DALPINE PASTORIA ADDITION - SYSTEM IMPACT STUDY
PROPOSED IN-SERVICE DATE: JULY 2006
CASE STUDY 1: HEAVY SUMMER PRE-PROJECT

H-1: DAILEY-PASTORIA 230KV

c:\wpsl\f3\calpine\ref expand
c:\wpsl\f3\calpine\ref expand
Rating = 1

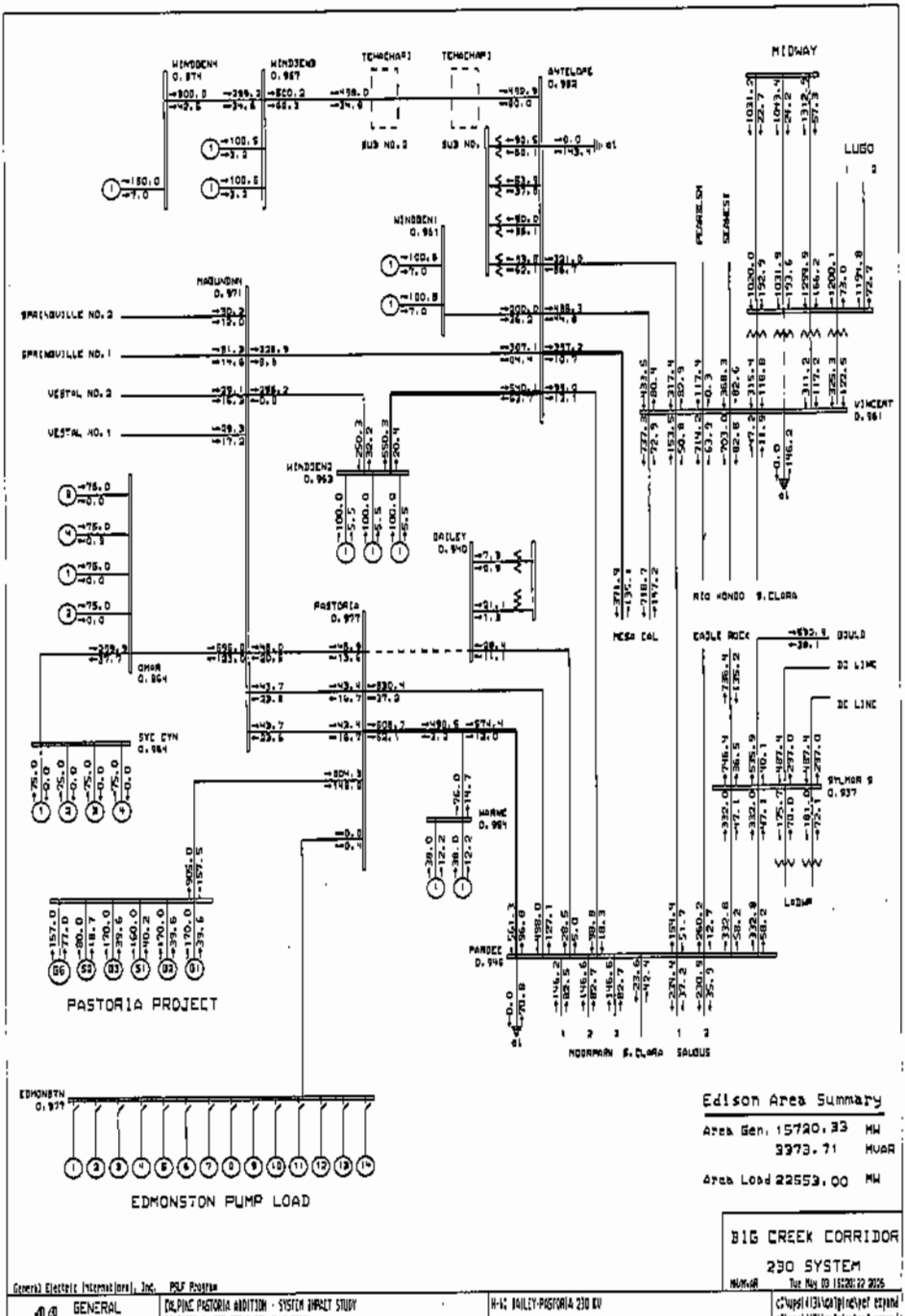
WINDDEN4
0.974
WINDDEN0
0.967
TEHACHAP1
TEHACHAP1
SUB NO.2
SUB NO.
ANTELOPE
0.982
MIDWAY
LUGO
WINDDEN1
0.961
MADWOWN4
0.971
SPRINGVILLE NO.2
SPRINGVILLE NO.1
VESTAL NO.2
VESTAL NO.1
VINCENT
0.961
WINDDEN2
0.963
DAILEY
0.940
PASTORIA
0.977
OMAR
0.964
SYC CYN
0.964
MARNE
0.964
PANDEE
0.946
SYLMAR S
0.937
EDMONSTN
0.979
PASTORIA PROJECT
EDMONSTON PUMP LOAD
MOORPARK
S.CLARA
SALGUS
RIO HONDO
S.CLARA
MESA CAL
EAGLE ROCK
DSULD
DC LINE
DC LINE
LADWP
Edison Area Summary
Area Gen. 15720.33 MW
3373.71 MVAR
Area Load 22553.00 MW
BIG CREEK CORRIDOR
230 SYSTEM
General Electric International, Inc. PSLF Program
GENERAL ELECTRIC COMPANY
DELPINC PASTORIA ADDITION - SYSTEM IMPACT STUDY
PROPOSED IN-SERVICE DATE: JULY 2006
CASE STUDY 2: HEAVY SUMMER POST- PROJECT
H-1C BAILEY-PASTORIA 230 KV

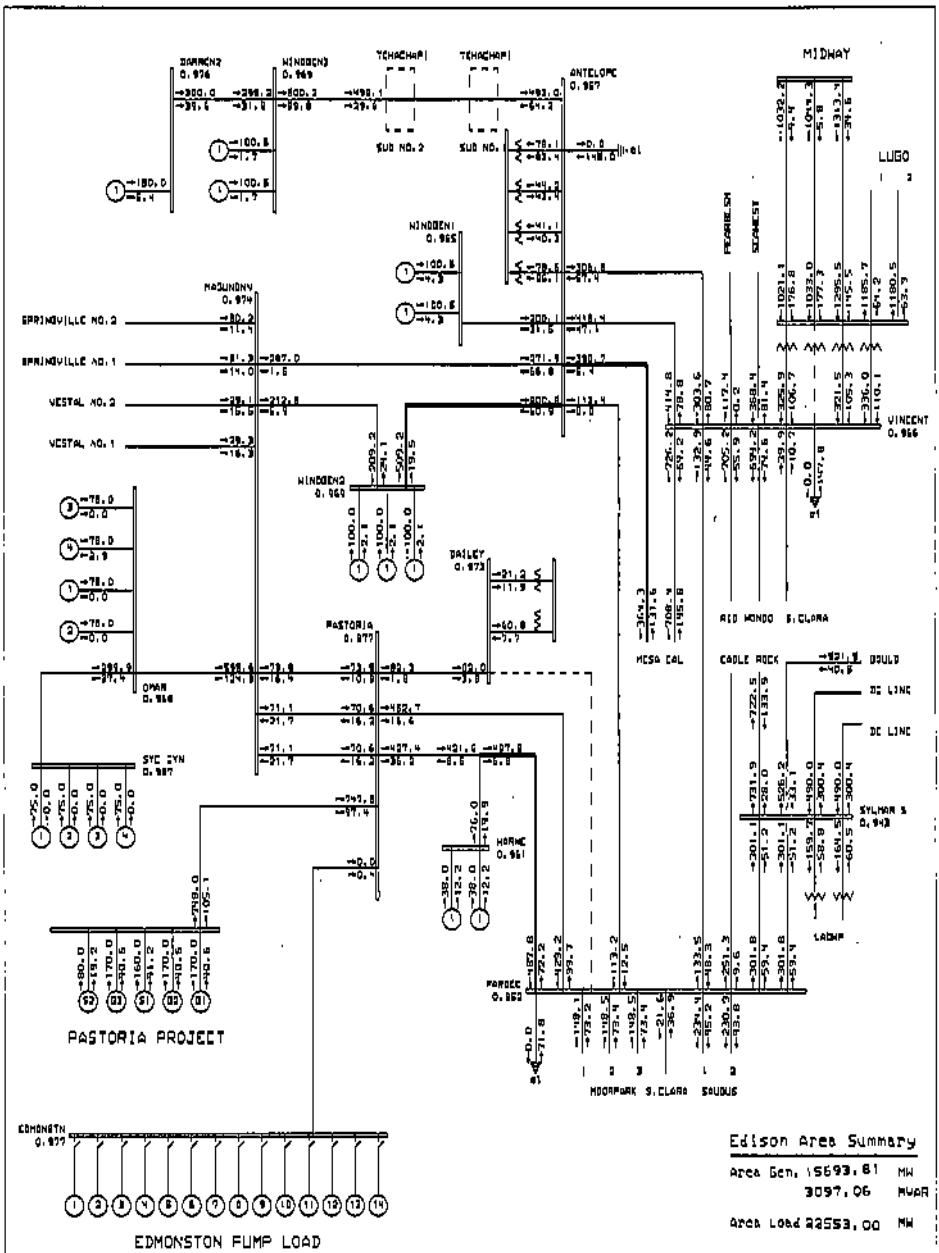
MIDWAY
LUGO
VINCENT
0.966
TEHACHAPI
SUB NO. 2
SUB NO. 1
ANTELOPE
0.987
WINDGEN3
0.969
WINDGEN1
0.965
WINDGEN2
0.969
MASUNDNV
0.974
SPRINGVILLE NO. 2
SPRINGVILLE NO. 1
VESTAL NO. 2
VESTAL NO. 1
BAILEY
0.973
PASTORIA
0.977
OMAR
0.956
SYC SYN
0.987
HORNE
0.951
PARDEE
0.952
MOORPARK
S.CLARA
SOUDUS
MESA CAL
CADLE ROCK
RIO MONDO
S.CLARA
SYLMAR S
0.943
LADWP
EDMONSTN
0.977
PASTORIA PROJECT
EDMONSTON PUMP LOAD
Edison Area Summary
Area Gen. 15693.81 MW
3097.06 MVAR
Area Load 22553.00 MW
BIG CREEK CORRIDOR
230 SYSTEM
General Electric International, Inc. PSLF Program
GENERAL ELECTRIC COMPANY
CALPINE PASTORIA ADDITION - SYSTEM IMPACT STUDY
PROPOSED IN-SERVICE DATE: JULY 2006
CASE STUDY 1: HEAVY SUMMER PRE-PROJECT
N-1: BAILEY-PARDEE 230KV

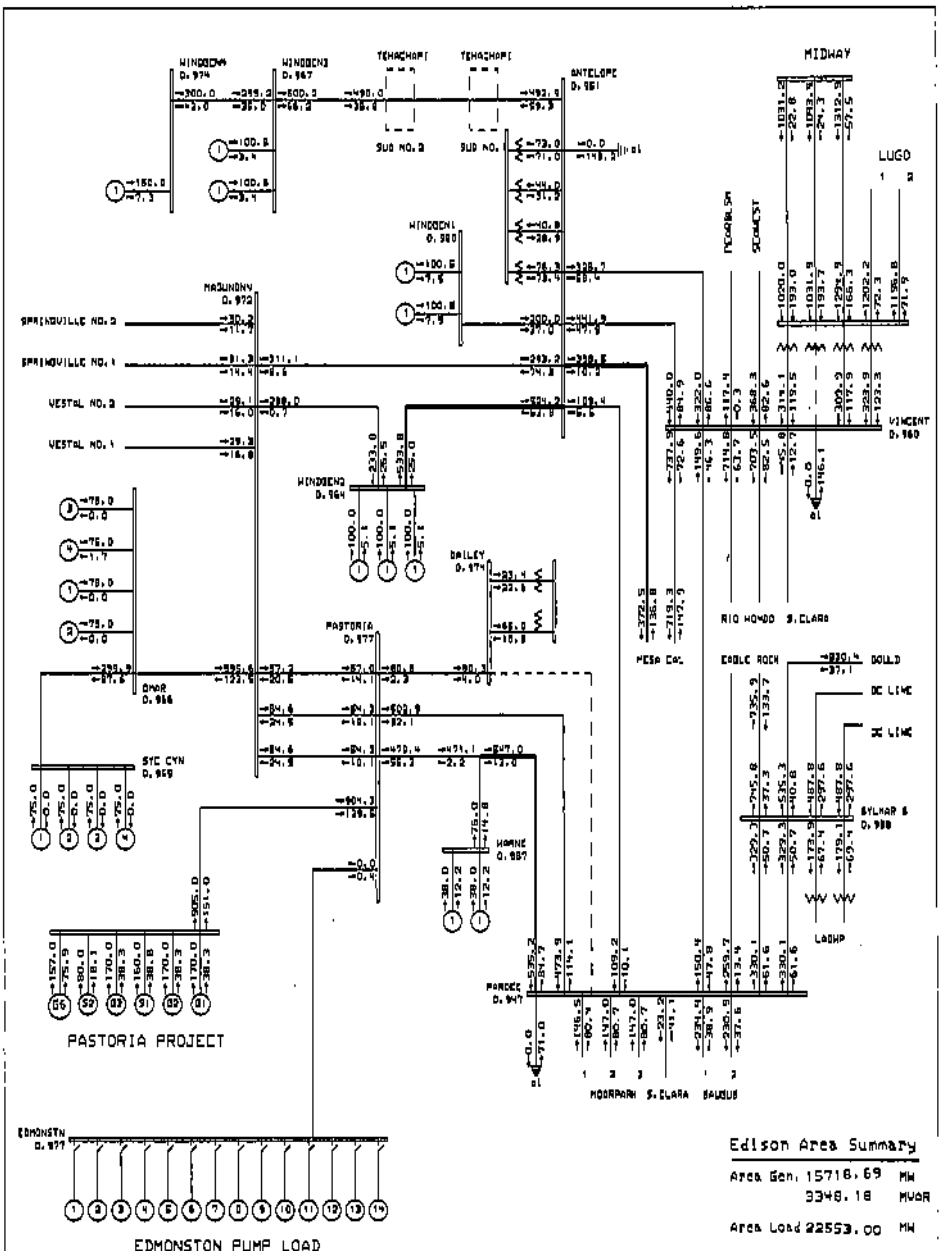

Edison Area Summary

Area Gen. 15716.69 MW
3348.18 MVAR

Area Load 22553.00 MW

BIG CREEK CORRIDOR
230 SYSTEM

MAPMAR Tue May 03 15:12:24:3 2005

General Electric International, Inc. PSLF Program

GENERAL ELECTRIC COMPANY

CALPINE PASTORIA ADDITION - SYSTEM IMPACT STUDY
PROPOSED IN-SERVICE DATE: JULY 2006
CASE STUDY #: HEAVY SUMMER POST- PROJECT

N-1: BAILEY-PARDEE 230 KV

c:\ways\fi3\cal\fnc\jet expand
c:\ways\fi3\cal\fnc\jet expand
Rating: 1

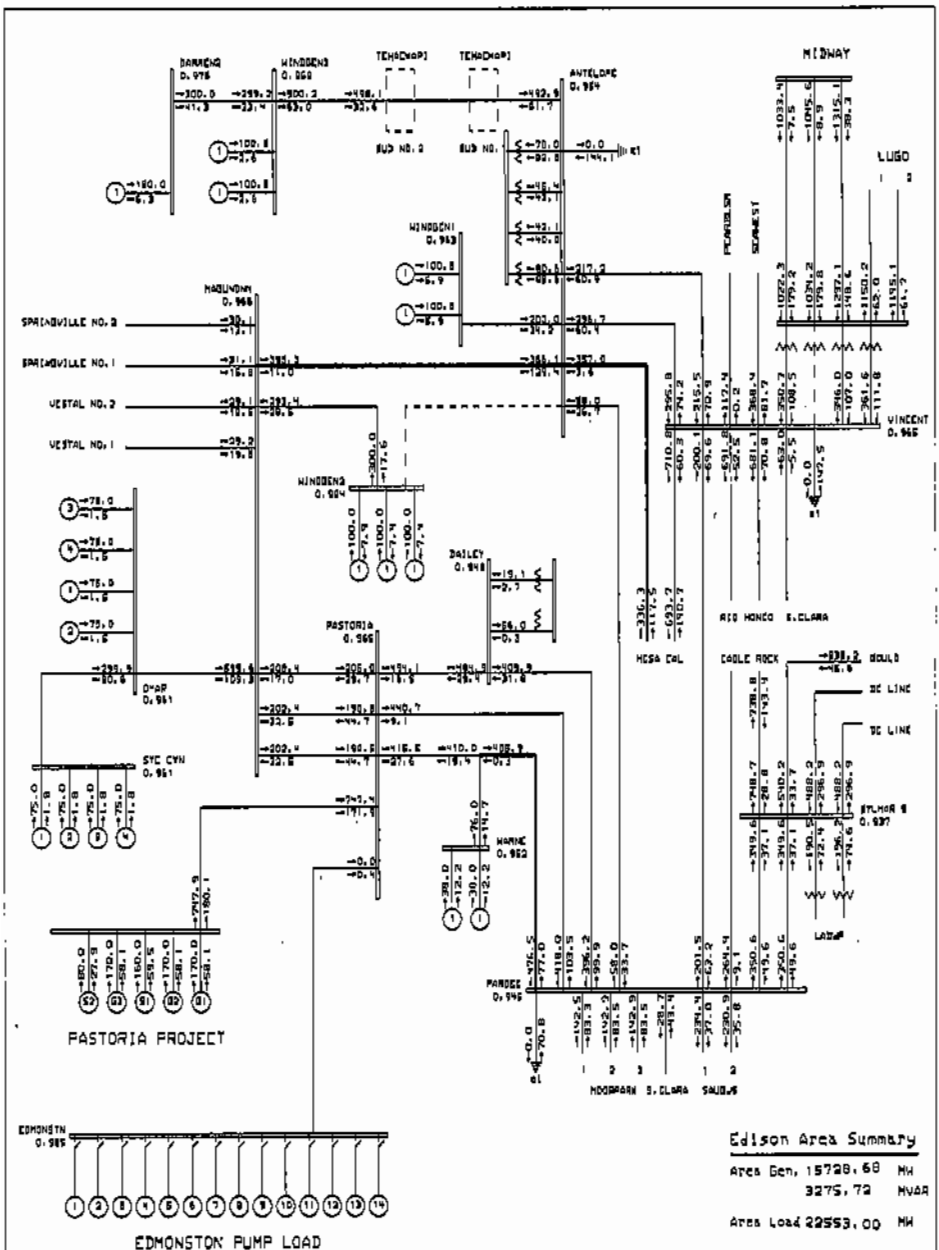

Edison Area Summary

Area Gen, 15728.68 MW
3275.72 MVAR

Area Load 22553.00 MW

BIG CREEK CORRIDOR
230 SYSTEM

General Electric International, Inc. PSLF Program

GENERAL ELECTRIC COMPANY

CALPINE PASTORIA ADDITION - SYSTEM IMPACT STUDY
PROPOSED IN-SERVICE DATE: JULY 2006
CASE STUDY 1: HEAVY SUMMER PRE-PROJECT

SA-1: ANTELOPE-CONTRABAND 230KV

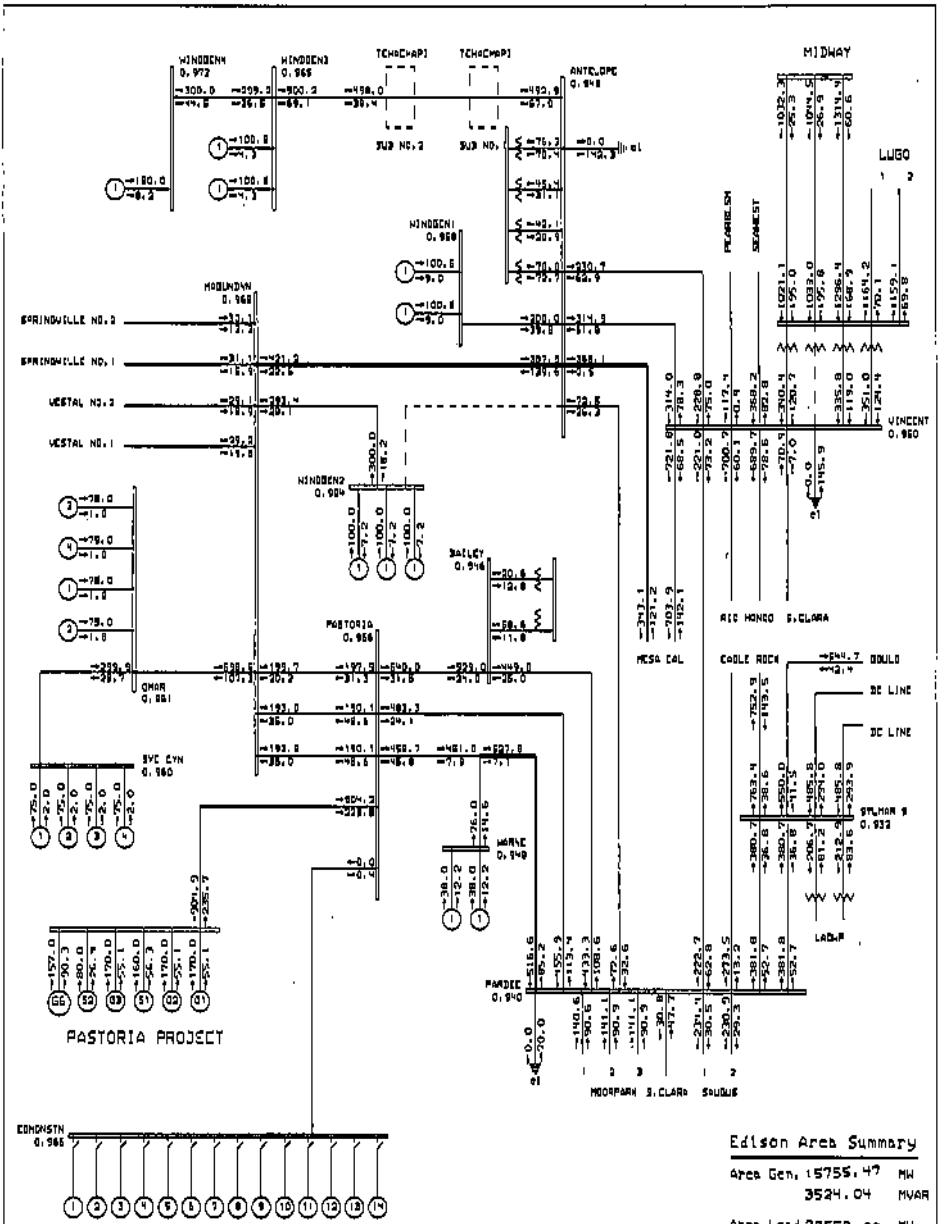

Edison Area Summary

Area Gen. 15755.47 MW
3524.04 MVAR

Area Load 22553.00 MW

31G CREEK CORRIDOR

230 SYSTEM

PAMYNAR Tue May 09 13:21:51 2006

General Electric International, Inc. PSLF Program

GENERAL ELECTRIC COMPANY

COLPINE PASTORIA ADDITION - SYSTEM IMPACT STUDY
PROPOSED IN-SERVICE DATE: JULY 2006
CASE STUDY: HEAVY SUMMER POST- PROJECT

H-1: ANTELOPE-COTTONWOOD 230 KV

c:\wpsf\13\ca3p1ncyef expand
c:\wpsf\13\ca3p1ncyef expand
Rating = 1

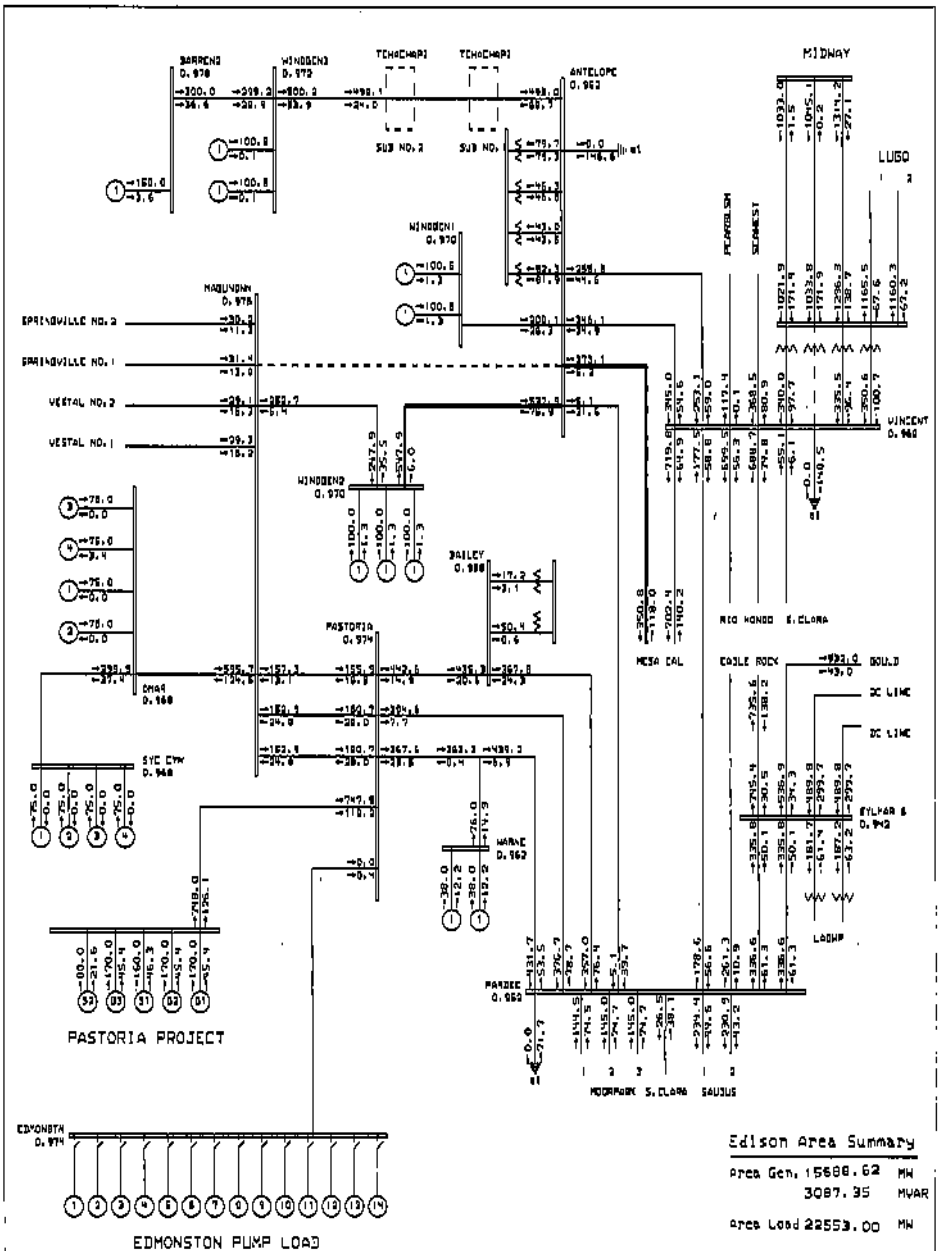

Edison Area Summary

Area Gen. 15688.62 MW
3087.35 MVAR

Area Load 22553.00 MW

BIG CREEK CORRIDOR
230 SYSTEM

General Electric International, Inc. PSLF Program

GENERAL ELECTRIC COMPANY

CALPINE PASTORIA ADDITION - SYSTEM IMPACT STUDY
PROPOSED IN-SERVICE DATE: JULY 2006
CASE STUDY 1: SUMMER PRE-PROJECT

N-1: ANTELOPE-MOORPARK 230 KV

Tue May 03 12:29:06 2005

Rating 1

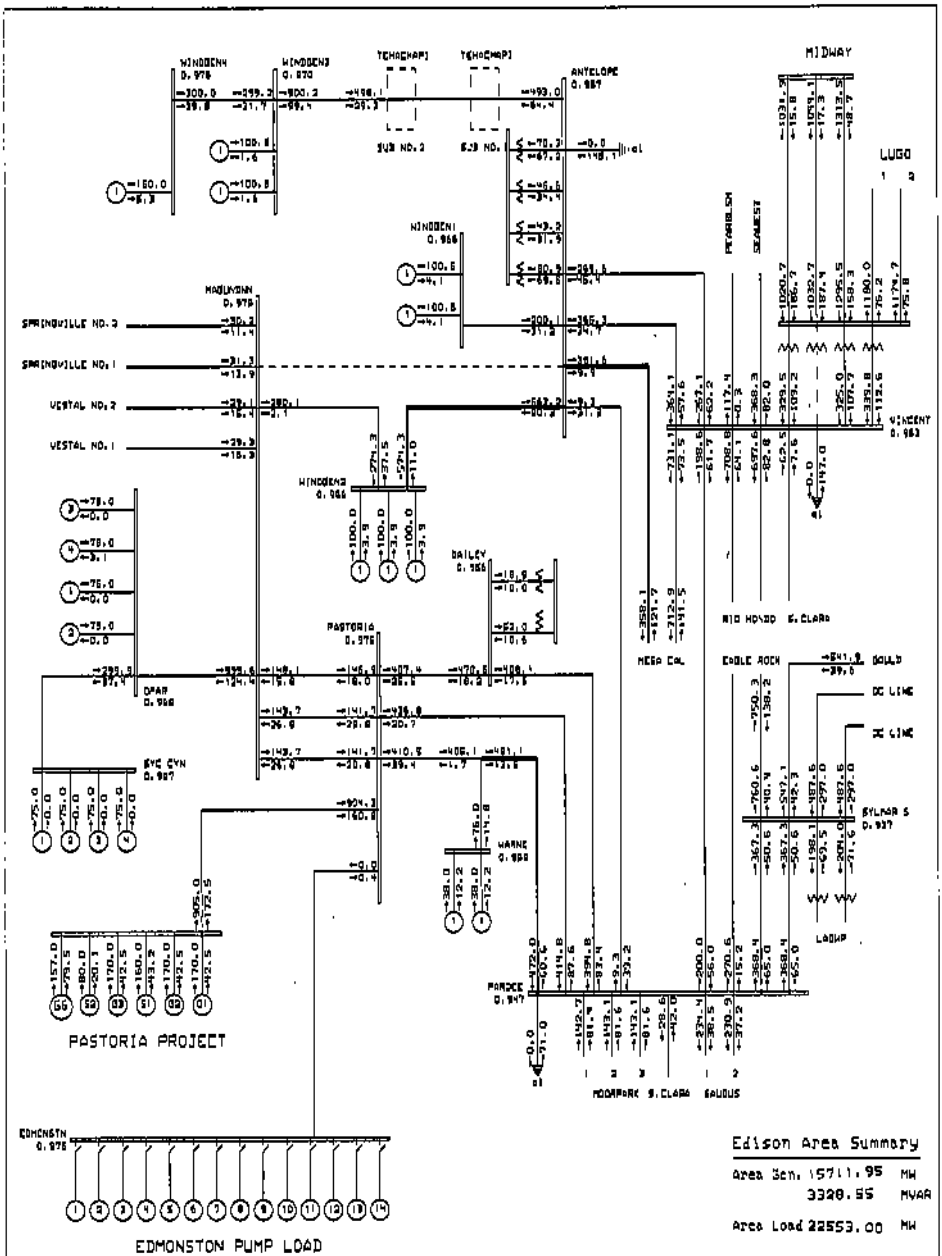

Edison Area Summary

Area Gen. 15711.95 MW
3328.55 MVAR

Area Load 22553.00 MW

BIG CREEK CORRIDOR

230 SYSTEM

MW/MVAR Tue May 03 15:30:10 2005

General Electric International, Inc. PSLF Program

GENERAL ELECTRIC COMPANY

DOLPHIN PASTORIA ADDITION - SYSTEM IMPACT STUDY
PROPOSED IN-SERVICE DATE: JULY 2006
CASE STUDY: HEAVY SUMMER POST-PROJECT

H-11 ANTELOPE-MADUKDNN NO. 1 230 KV

c:\ups\131\cap\pslrelyef expand
c:\ups\131\cap\pslrelyef expand
Rating = 1

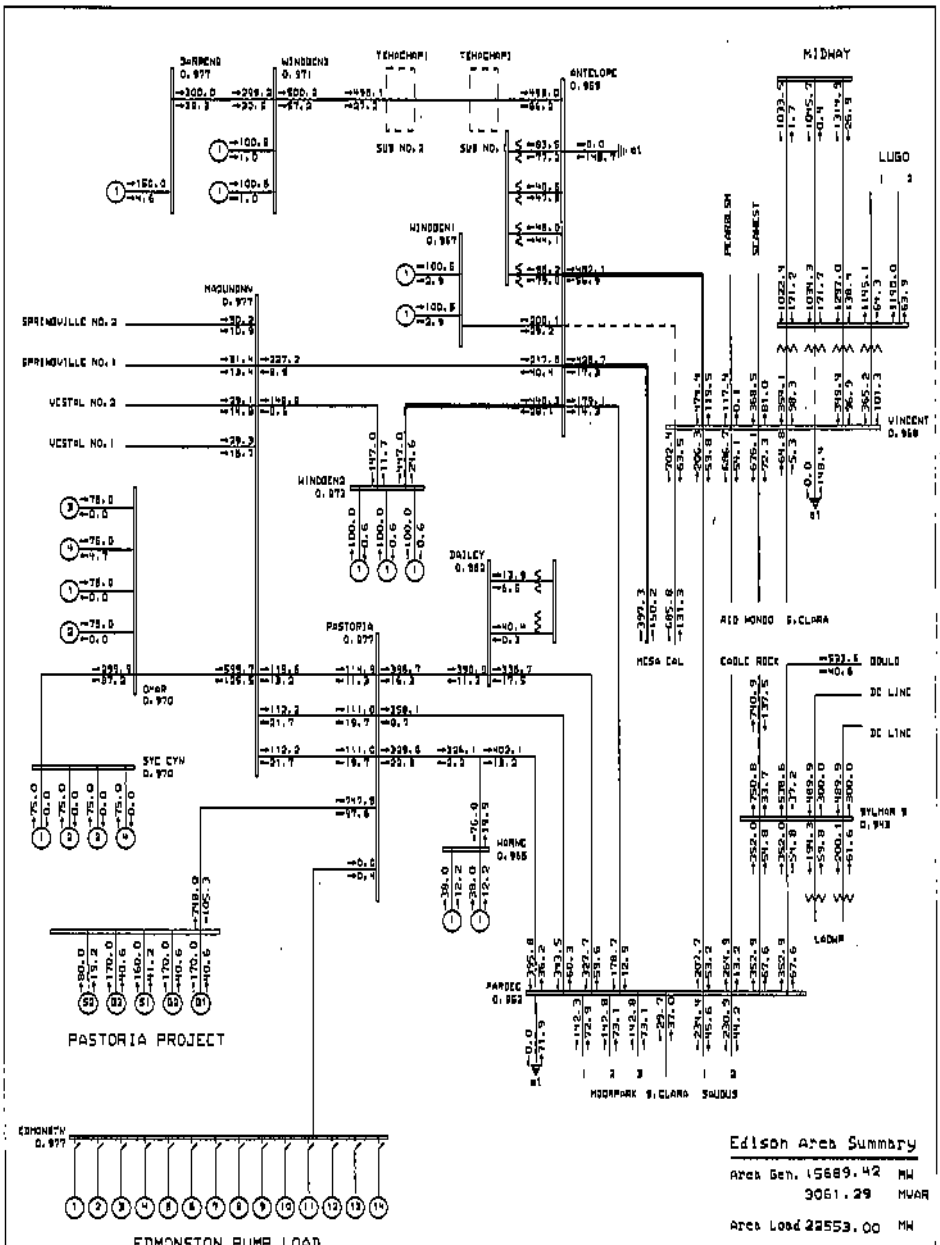

Edison Area Summary

Area Gen. 15689.42 MW
3061.29 MVAR

Area Load 22553.00 MW

BIG CREEK CORRIDOR
230 SYSTEM

General Electric International, Inc. PSLF Program

GENERAL ELECTRIC COMPANY

CALPINE PASTORIA ADDITION - SYSTEM IMPACT STUDY
PROPOSED IN-SERVICE DATE: JULY 2006
CASE STUDY 1: HEAVY SUMMER PRE-PROJECT

H-1: NEW ANTELOPE-VINCENT 230KV

Rating = 1

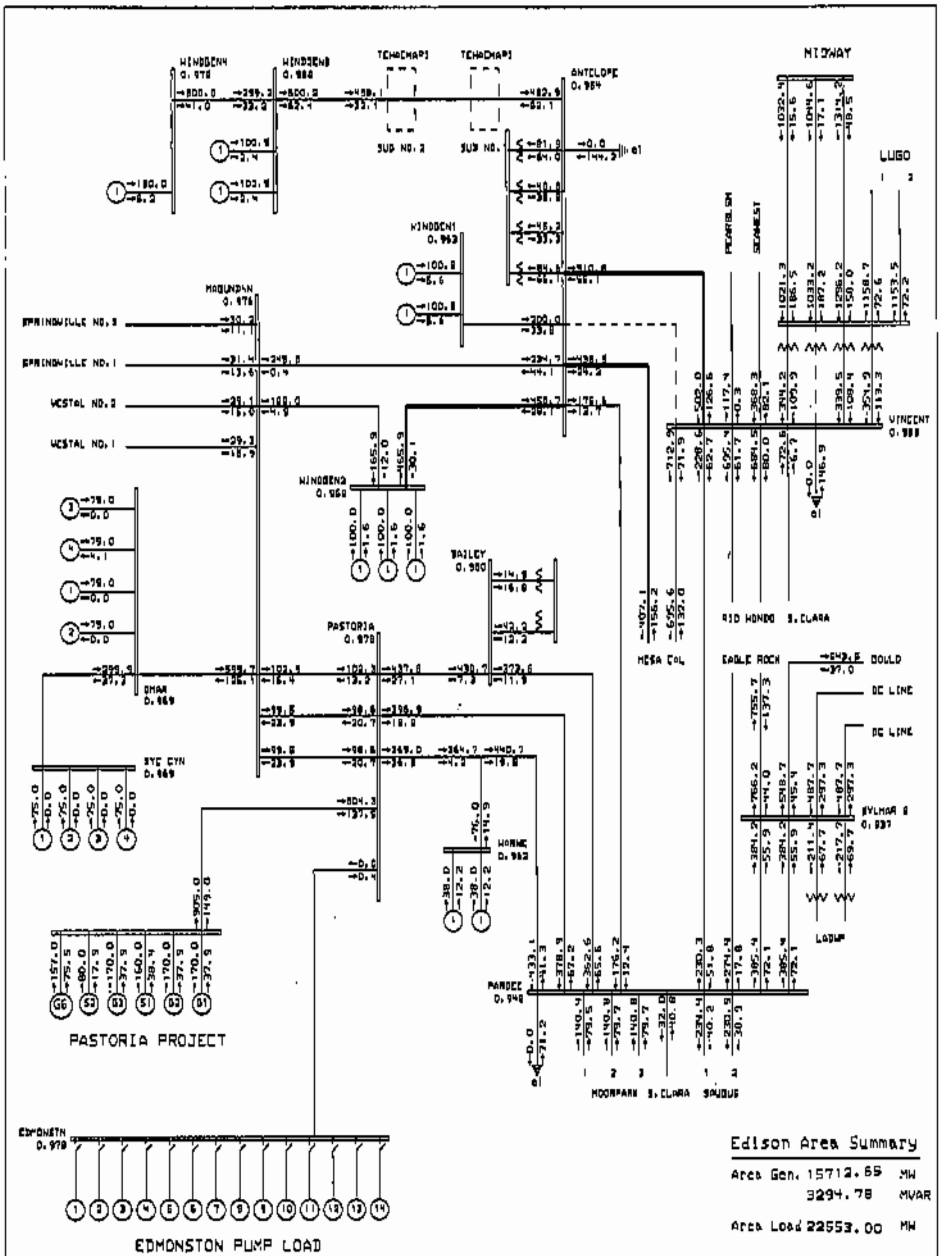

Edison Area Summary

Area Gen. 15712.65 MW
3294.78 MVAR

Area Load 22553.00 MW

BIG CREEK CORRIDOR

230 SYSTEM

HAYWARD Tue May 03 15:45:05 2005

General Electric International, Inc. PSLF Program

GENERAL ELECTRIC COMPANY

CALPINE PASTORIA ADDITION - SYSTEM IMPACT STUDY
PROPOSED IN-SERVICE DATE: JULY 2006
CASE STUDY: HEAVY SUMMER POST- PROJECT

N-1: NEW ANTELOPE-VINCENT 230 KV

c:\psls\13\local\bigcp expand
c:\psls\13\local\bigcp expand
Rating = 1

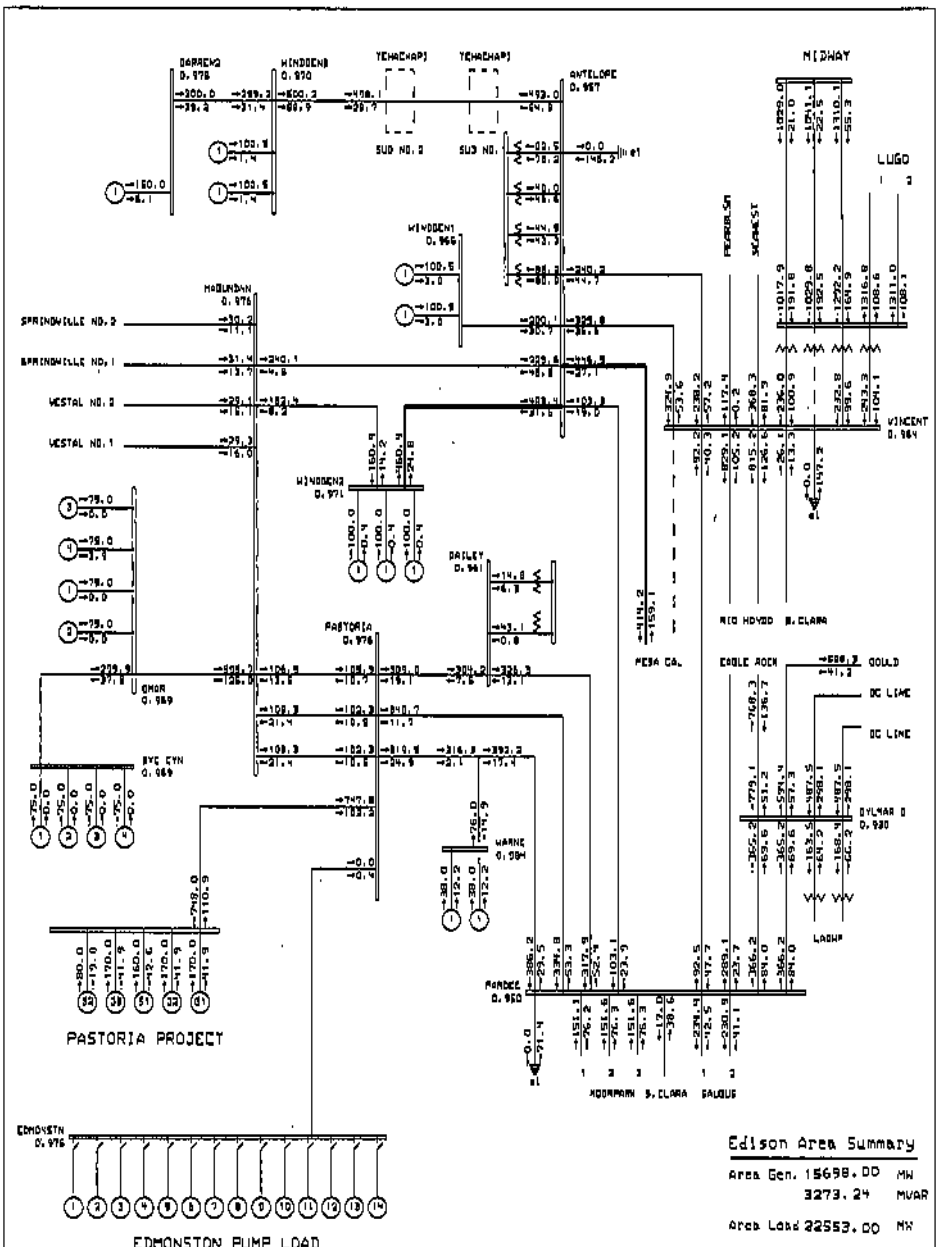

Edison Area Summary

Area Gen. 15698.00 MW
3273.24 MVAR

Area Load 22553.00 MW

BIG CREEK CORRIDOR
230 SYSTEM
MW/MVAR Tue May 03 12:41:46 2005

General Electric International, Inc. PSLF Program

GENERAL ELECTRIC COMPANY

CALPINE PASTORIA ADDITION - SYSTEM IMPACT STUDY
PROPOSED IN-SERVICE DATE: JULY 2006
CASE STUDY 1: HEAVY SUMMER PRE-PROJECT

A-1: MESA-VINCENT 230kV

c:\wpsf\13\cal\ptw\pgd expsd
c:\wpsf\13\cal\ptw\pgd expsd
Rating: 1

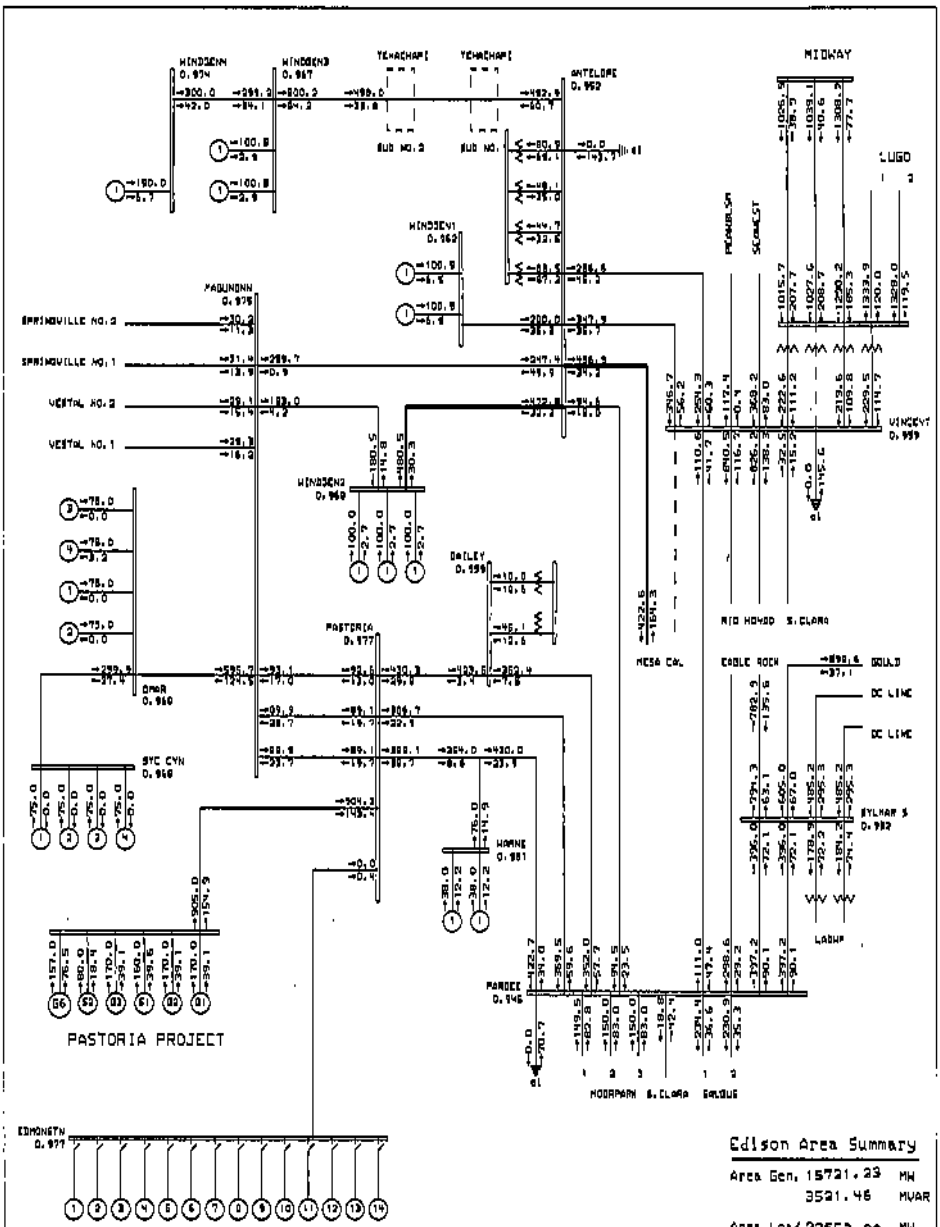
MIDWAY
LUGO
VINCENT
MESA COL
RIO HONDO
S.CLARA
EAGLE ROCK
GOLD.D
DC LINE
DC LINE
SYLMAR S
LADWP
MOORPARK
S.CLARA
EAGLE
PARDEE
HORNE
BAILEY
PASTORIA
OMAR
SYC CYN
SPRINGVILLE NO.2
SPRINGVILLE NO.1
VESTAL NO.2
VESTAL NO.1
WINDSCN
WINDSCN2
WINDSCN1
WINDCNN
WINDCKN
YEHACHAPI
SUB NO.2
SUB NO.1
ANTELOPE
PASTORIA PROJECT
EDMONSTN
EDMONSTON PUMP LOAD
Edison Area Summary
Area Gen. 15721.23 MW
3521.46 MVAR
Area Load 22553.00 MW
DIG CREEK CORRIDOR
230 SYSTEM
General Electric International, Inc. PSLF Program
GENERAL ELECTRIC COMPANY
CALPINE PASTORIA ADDITION - SYSTEM IMPACT STUDY
PROPOSED IN-SERVICE DATE: JULY 2006
CASE STUDY: HEAVY SUMMER POST- PROJECT
N-1: MESA-VINCENT 230 KV

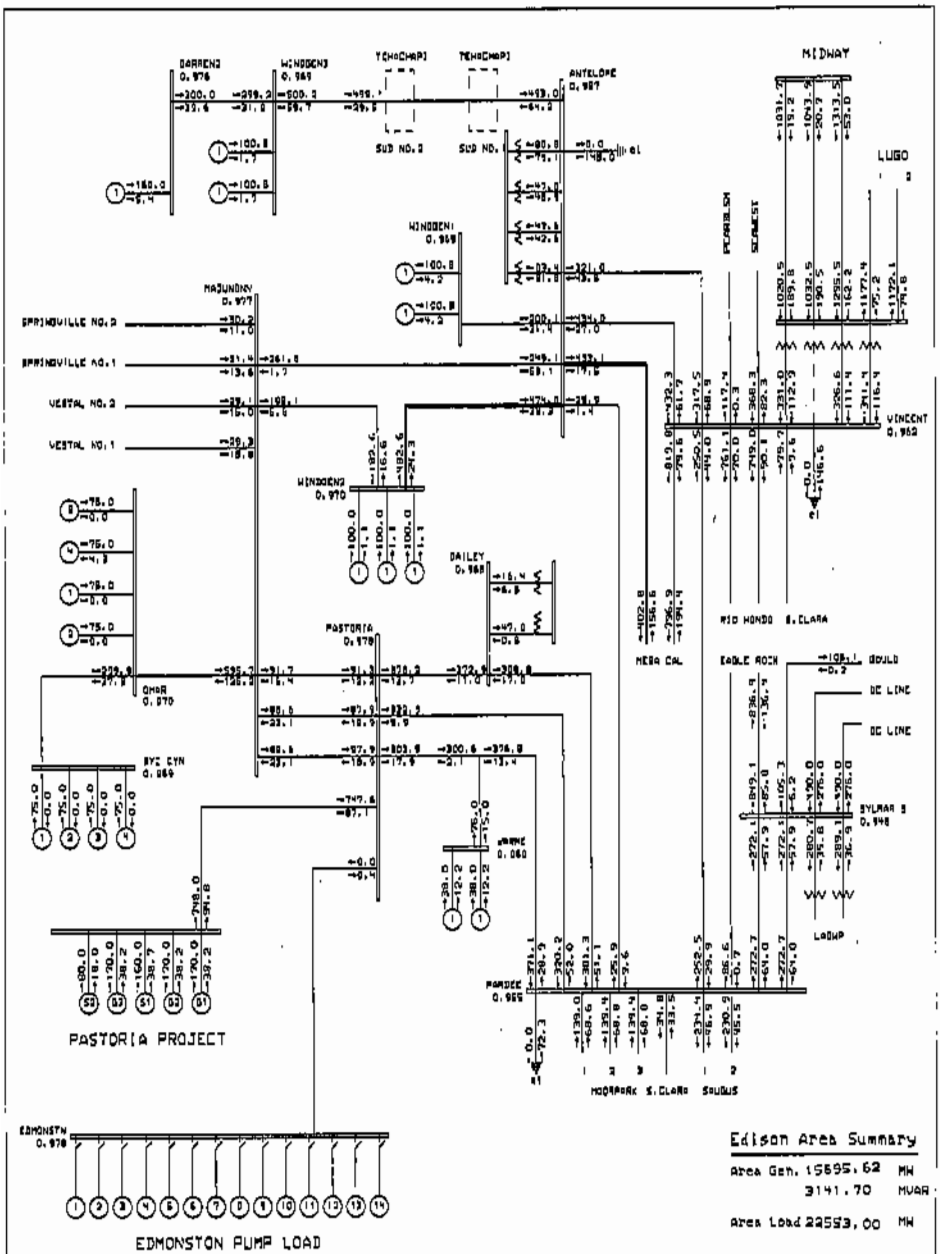

Edison Area Summary

Area Gen. 15695.62 MW
3141.70 MVAR

Area Load 22553.00 MW

BIG CREEK CORRIDOR
230 SYSTEM

General Electric International, Inc. PSLF Program

GENERAL ELECTRIC COMPANY

CALPINE PASTORIA ADDITION - SYSTEM IMPACT STUDY
PROPOSED IN-SERVICE DATE: JULY 2006
CASE STUDY 1: HEAVY SUMMER PRE-PROJECT

N-1: EAGLE ROCK-MESA 230KV

c:\psls\1131\cal\heavyf expand
c:\psls\1131\cal\heavyf expand
Rating = 1

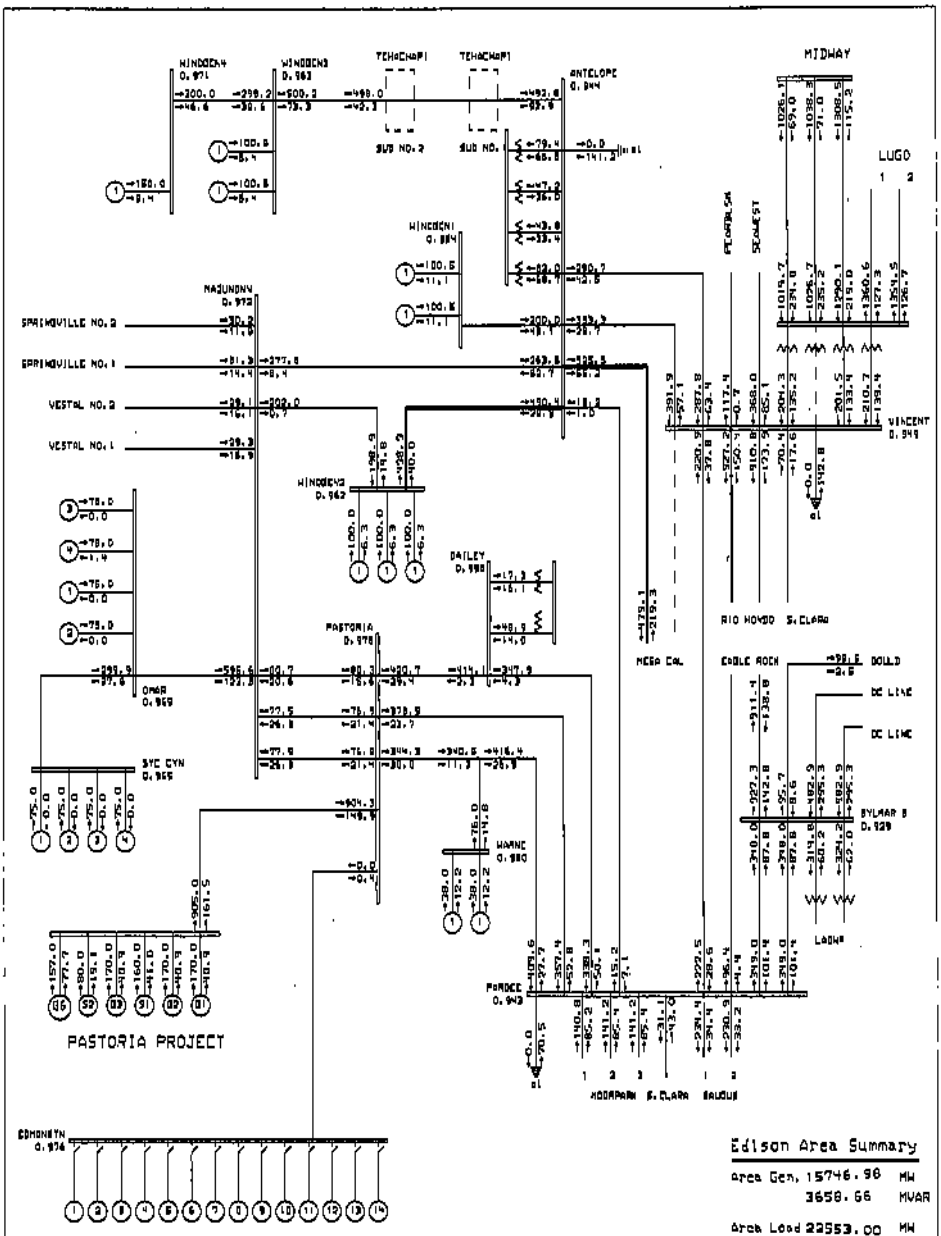

Edison Area Summary

Area Gen, 15746.96 MW
3658.66 MVAR

Area Load 22553.00 MW

BIG CREEK CORRIDOR
230 SYSTEM

General Electric International, Inc. PSLF Program

GENERAL ELECTRIC COMPANY

CALPINE PASTORIA ADDITION - SYSTEM IMPACT STUDY
PROPOSED IN-SERVICE DATE: JULY 2006
CASE STUDIED: HEAVY SUMMER POST- PROJECT

W-12 EAGLE ROCK - MESA 230 CU

c:\ge\pslf\cal\fnl\ge\pf expand
c:\ge\pslf\cal\fnl\ge\pf expand
Rating: 1

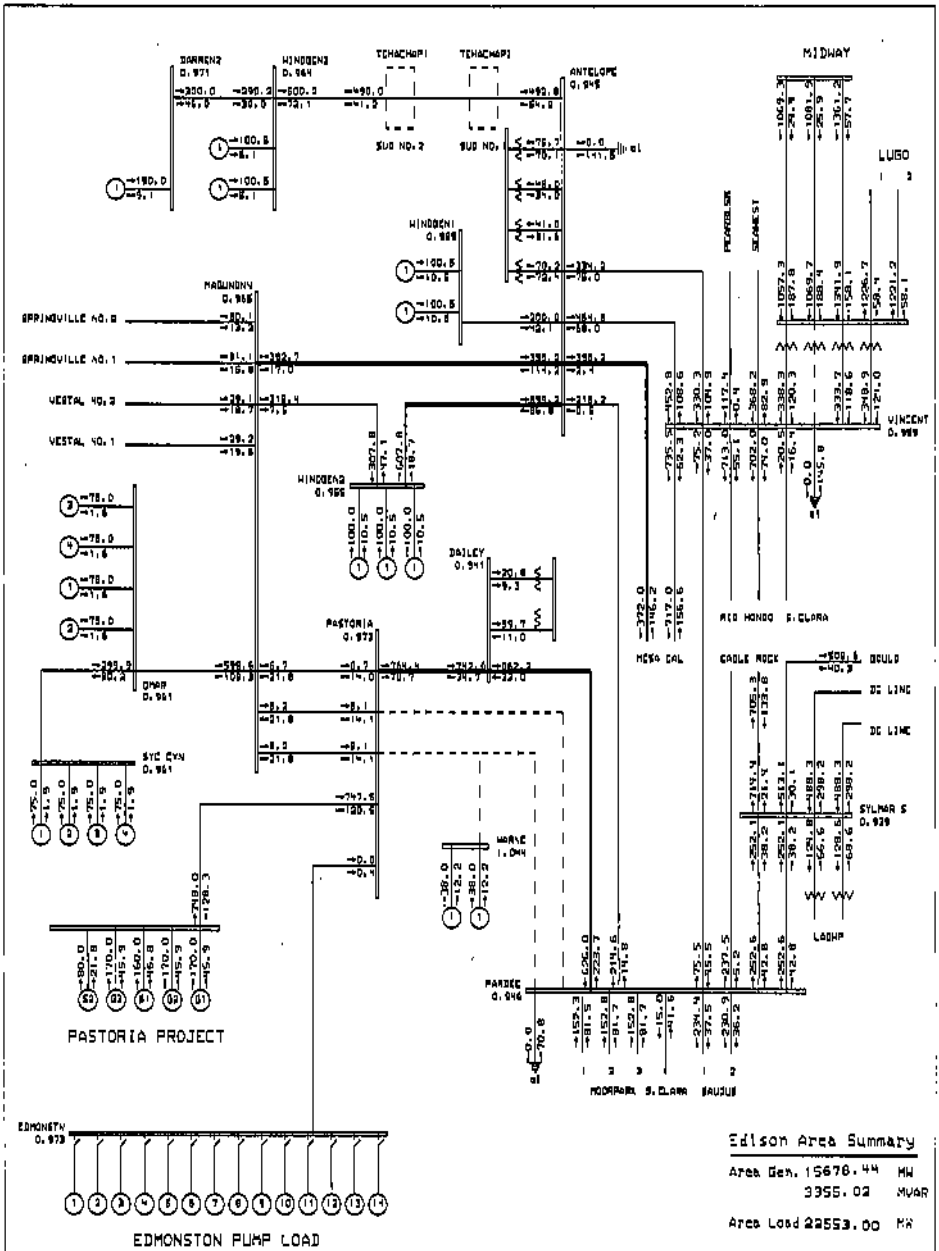

Edison Area Summary

Area Gen. 15678.44 MW
3355.02 MVAR

Area Load 22553.00 MW

BIG CREEK CORRIDOR
230 SYSTEM

General Electric International, Inc. PSLF Program

GENERAL ELECTRIC COMPANY

CALPINE PASTORIA ADDITION - SYSTEM IMPACT STUDY
PROPOSED IN-SERVICE DATE: JULY 2006
CASE STUDY 1: SUMMER PRE-PROJECT

H-2: Pardee-Pastoria 230kV
Pardee-Pastoria-Morve 230kV

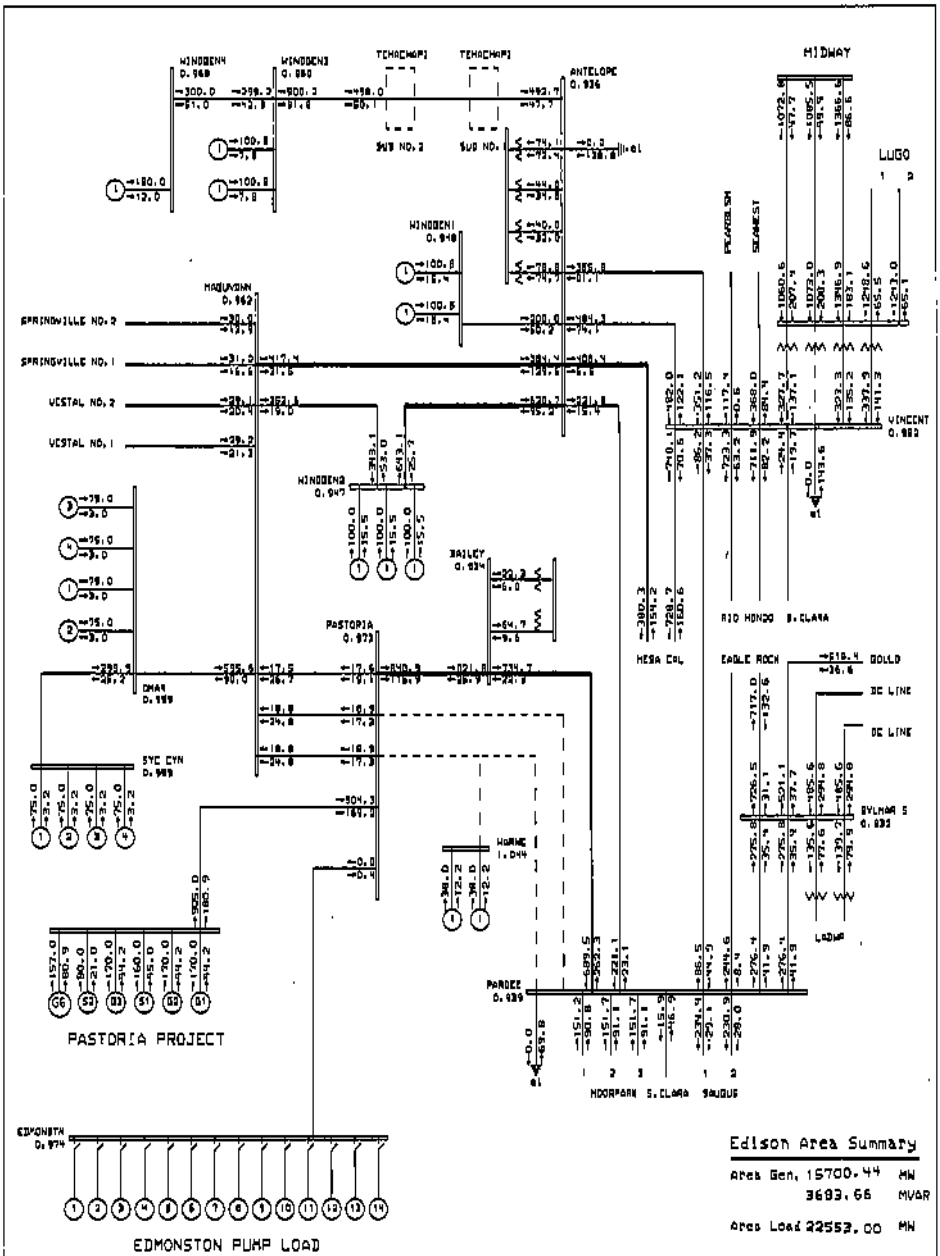

Edison Area Summary

Area Gen. 15700.44 MW
3693.66 MVAR

Area Load 22553.00 MW

BIG CREEK CORRIDOR

230 SYSTEM

MW/MVAR Tue May 03 15:51:50 2005

General Electric International, Inc. PSLF Program

GENERAL ELECTRIC COMPANY

CALPINE PASTORIA ADDITION - SYSTEM IMPACT STUDY
PROPOSED IN-SERVICE DATE: JULY 2006
CASE STUDY 2: HEAVY SUMMER 2014 - PROJECT

N-2: PARDEE-PASTORIA 230 KV
PARDEE-PASTORIA+WORME 230 KV

c:\psfi\13\bcd\project expand
c:\psfi\13\bcd\project expand
Rating = 1

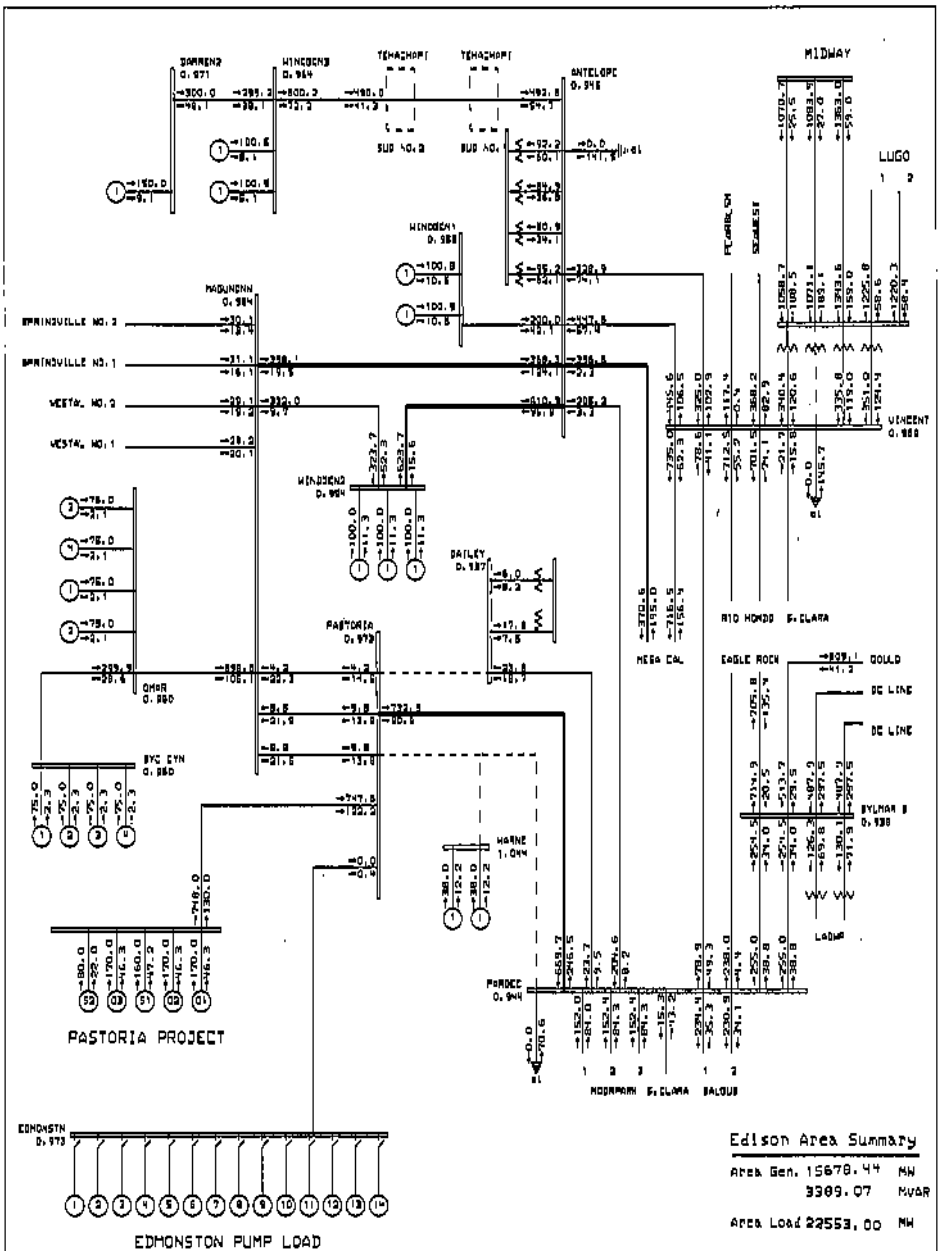

Edison Area Summary

Area Gen. 15670.44 MW
3309.07 MVAR

Area Load 22553.00 MW

BIG CREEK CORRIDOR
230 SYSTEM

MW/MVAR Tue Nov 03 11:00:50M 2005

General Electric International, Inc. PSLF Program

GENERAL ELECTRIC COMPANY

CALPINE PASTORIA ADDITION - SYSTEM IMPACT STUDY
PROPOSED IN-SERVICE DATE: JULY 2006
CASE STUDY 1: HEAVY SUMMER PRE-PROJECT

4-21 Bailey- Pastoria 230kV
Pardee-Pastoria-Horne 230kV

c:\psfi\fi3\cal\finelyer expand
c:\psfi\fi3\cal\finelyer expand
Rating: 1

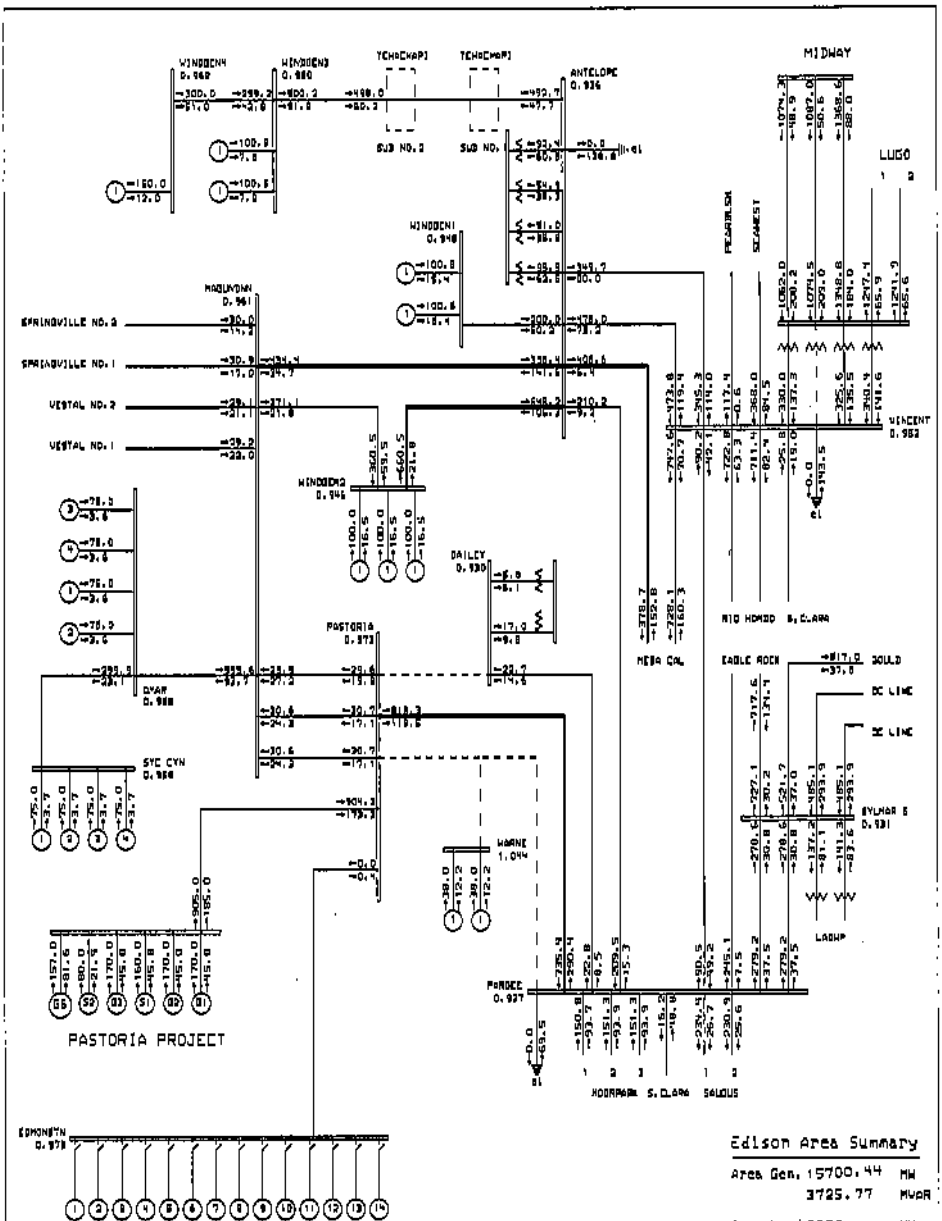

Edison Area Summary

Area Gen. 15700.44 MW
3725.77 MVAR

Area Load 22553.00 MW

BIG CREEK CORRIDOR
230 SYSTEM

General Electric International, Inc. PSLF Program

GENERAL ELECTRIC COMPANY

SALPINE PASTORIA ADDITION - SYSTEM IMPACT STUDY
PROPOSED IN-SERVICE DATE: JULY 2006
CASE STUDY: HEAVY SUMMER POST-PROJECT

W-2: DAILEY-PASTORIA 230 KV
PARDEE-PASTORIA-WARNE 230 KV

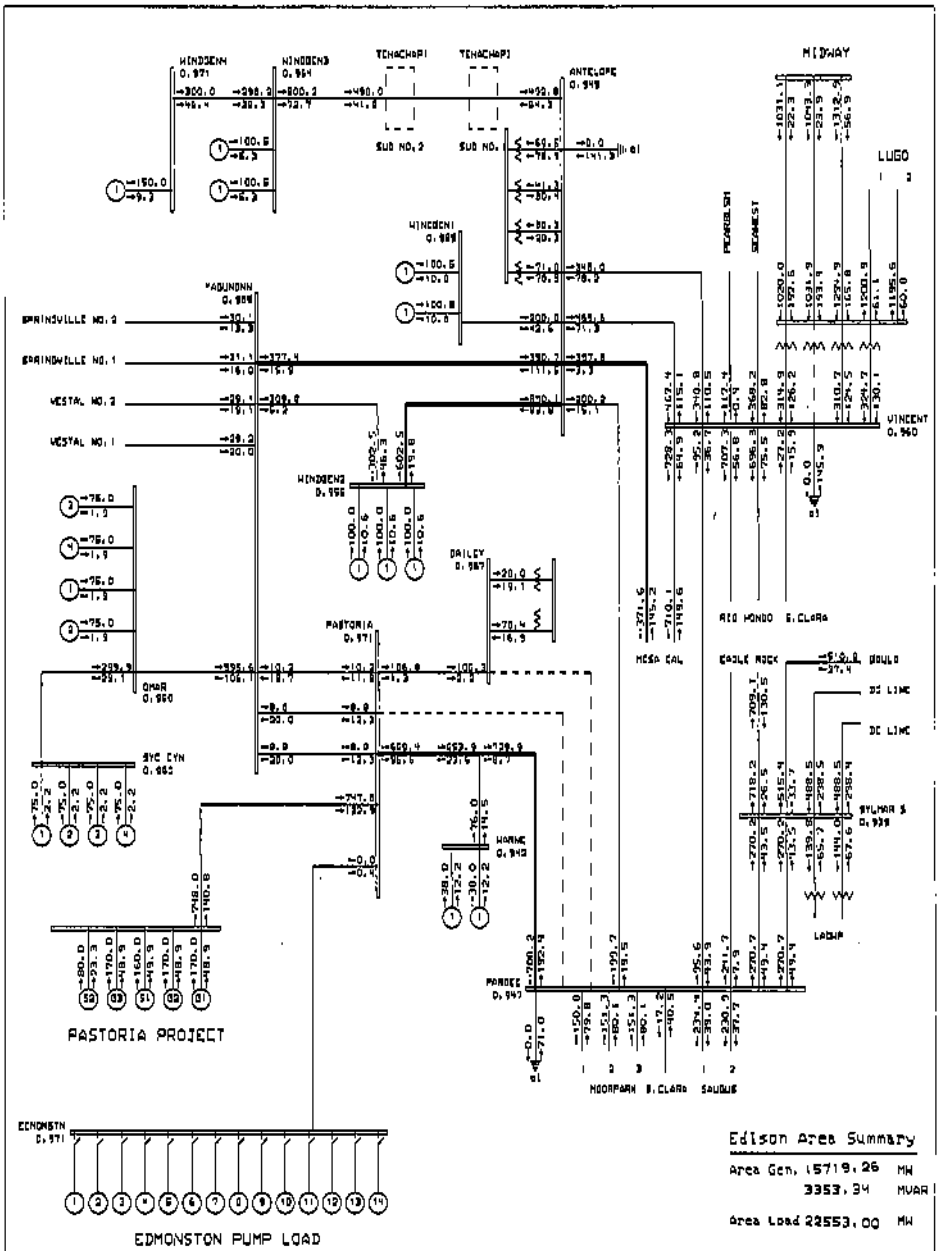

Edison Area Summary

Area Gen. 15719.26 MW
3353.34 MVAR

Area Load 22553.00 MW

BIG CREEK CORRIDOR
230 SYSTEM

General Electric International, Inc. PSLF Program

GENERAL ELECTRIC COMPANY

CALPINE PASTORIA ADDITION - SYSTEM IMPACT STUDY
PROPOSED IN-SERVICE DATE: JULY 2006
CASE STUDY 1: HEAVY SUMMER PRE-PROJECT

N-2: DAILEY-PARDEE 230 KV
PARDEE-PASTORIA 230 KV

Fri May 06 21:59:39 2005

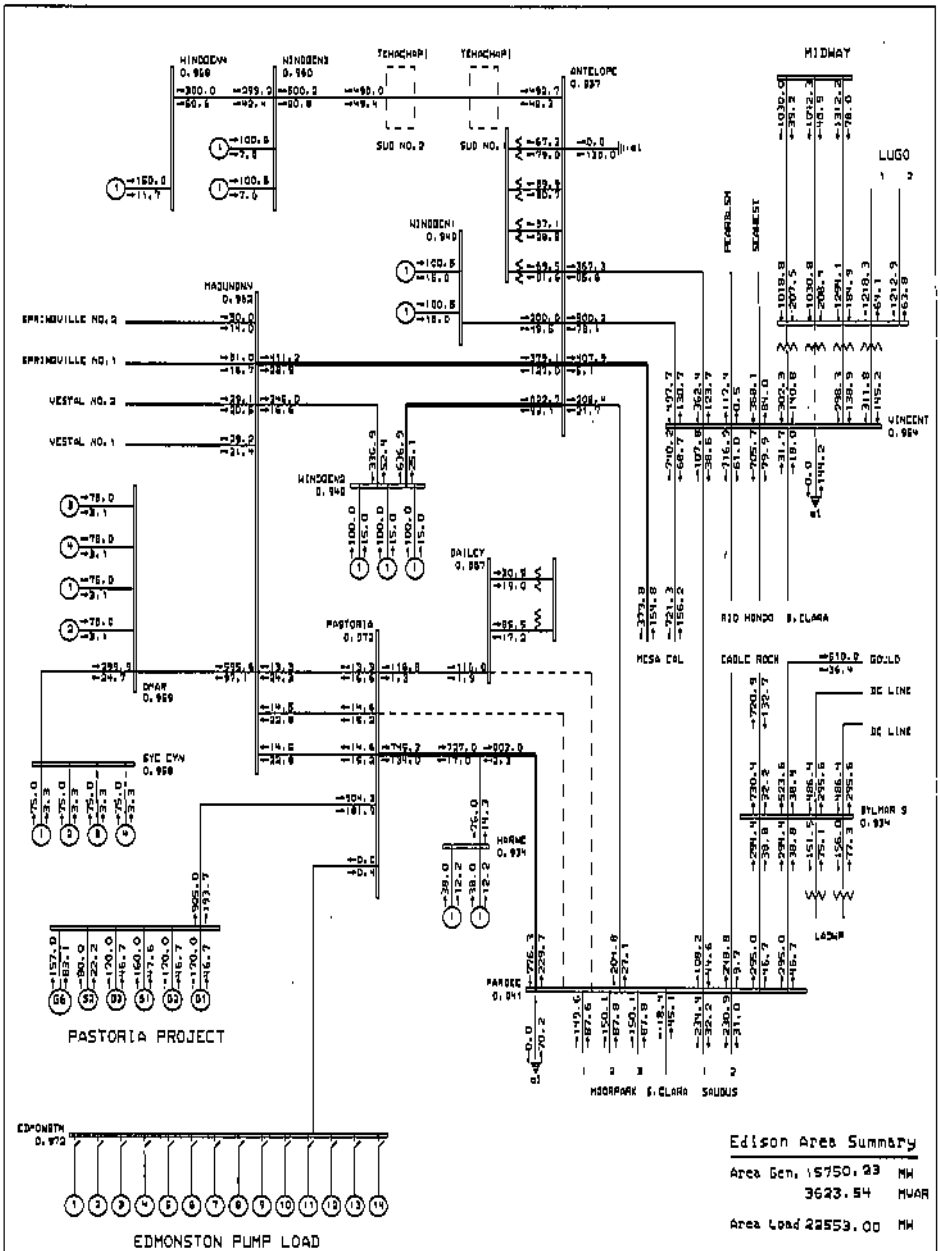

Edison Area Summary

Area Gen. 15750.23 MW
3623.54 MVAR

Area Load 22553.00 MW

BIG CREEK CORRIDOR
230 SYSTEM

Fri May 06 01:59:10 2005

General Electric International, Inc. PSLF Program

GENERAL ELECTRIC COMPANY

CALPINE PASTORIA ADDITION - SYSTEM IMPACT STUDY
PROPOSED IN-SERVICE DATE: JULY 2005
CASE STUDY 2: HEAVY SUMMER POST- PROJECT

N-2: DAILEY-PARDEE 230 KV
PARDEE-PASTORIA 230 KV

c:\ws\si\2\scalpine\pr expand
c:\ws\si\2\scalpine\pr expand
Rating = 1

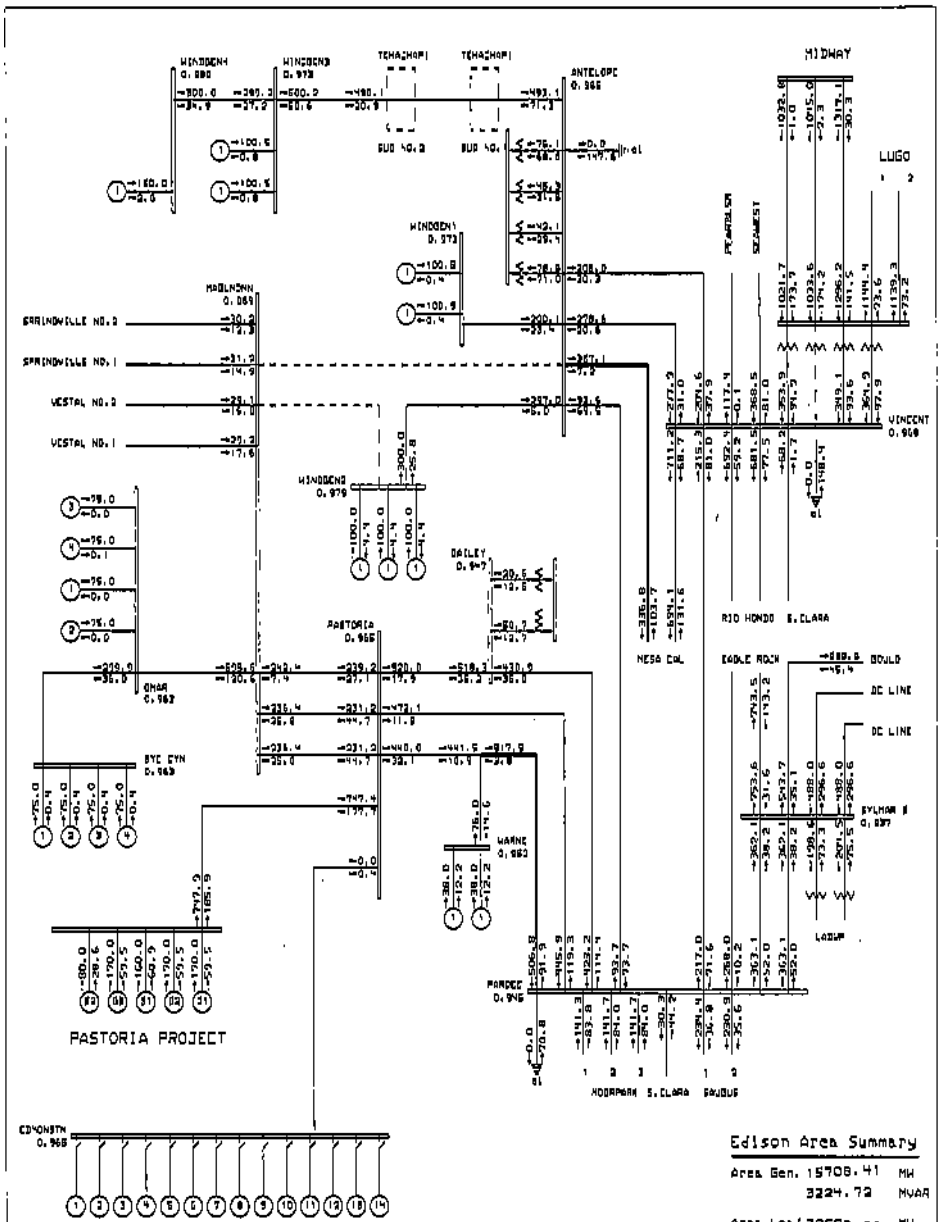

Edison Area Summary

Area Gen. 15708.41 MW
3224.72 MVAR

Area Load 22553.00 MW

BIG CREEK CORRIDOR
230 SYSTEM

General Electric International, Inc. PSLF Program

GENERAL ELECTRIC COMPANY

DALPINE PASTORIA ADDITION - SYSTEM IMPACT STUDY
PROPOSED IN-SERVICE DATE: JULY 2005
CASE STUDY 1: HEAVY SUMMER PRE-PROJECT

H-23 ANTELOPE-WINDMILL NO. 1 230 KV
COTTONWOOD-MAGUNDEN 230 KV

Fri May 06 09:03:16 2005

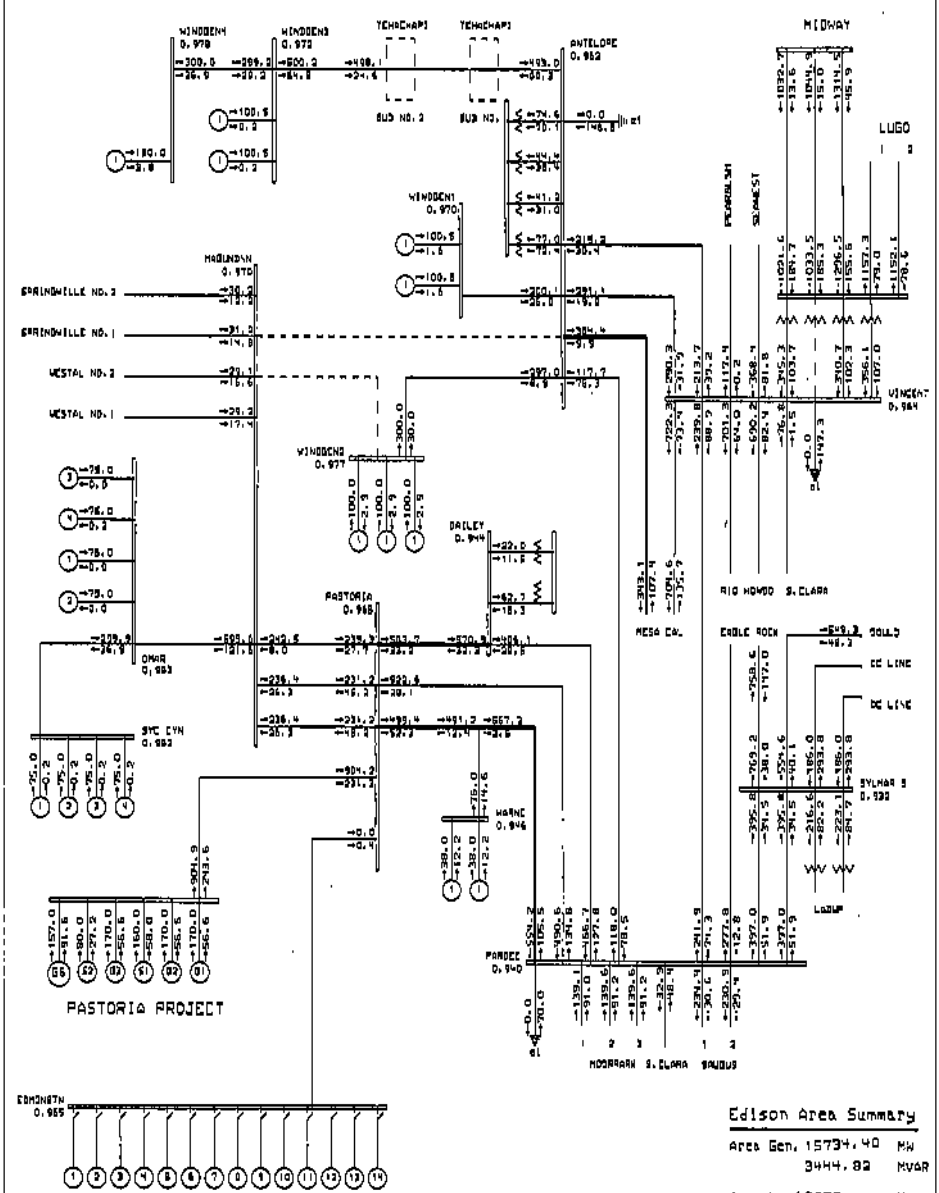
WINDDEN4
WINDDEN3
TEHACHAP1
TEHACHAP3
ANTELOPE
MIDWAY
LUGO
BUS NO. 2
BUS NO. 1
WINDDEN1
MADUNDAN
GRANDVILLE NO. 2
GRANDVILLE NO. 1
WESTAL NO. 2
WESTAL NO. 1
WINDDEN2
DAILEY
PASTORIA
OMAR
SYC CYN
MESA CAL
RIO HONDO
S. CLARA
EAGLE ROCK
GOULD
CC LINE
DC LINE
SYLMAR S
LADWP
WARNE
PANDEE
MOORPARK
S. CLARA
SAUGUS
VINCENT
PASTORIA PROJECT
EDMONSTN
EDMONSTON PUMP LOAD
Edison Area Summary
Area Gen. 15734.40 MW
3444.82 MVAR
Area Load 22553.00 MW
BIG CREEK CORRIDOR
230 SYSTEM
General Electric International, Inc. PSLF Program
GENERAL ELECTRIC COMPANY
CALPINE PASTORIA ADDITION - SYSTEM IMPACT STUDY
PROPOSED IN-SERVICE DATE: JULY 2006
CASE STUDY 2: HEAVY SUMMER PGAE - PROJECT
N-2: ANTELOPE-MADUNDAN NO.1 230 KV
COTTONWOOD-MADUNDAN 230 KV

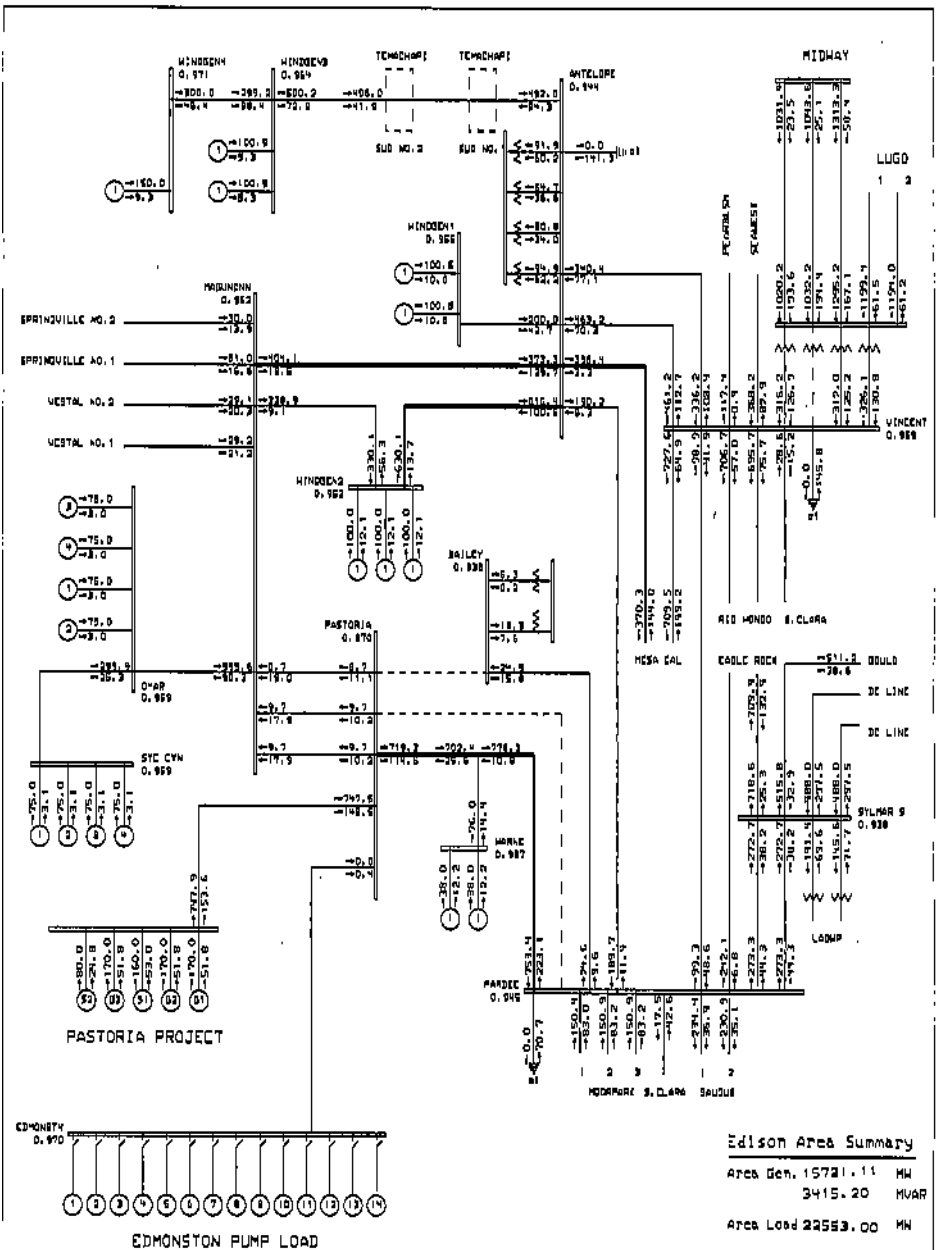

Edison Area Summary

Area Gen. 15721.11 MW
3415.20 MVAR

Area Load 22553.00 MW

BIG CREEK CORRIDOR
230 SYSTEM

General Electric International, Inc. PSLF Program

GENERAL ELECTRIC COMPANY

CALPINE PASTORIA ADDITION - SYSTEM IMPACT STUDY
PROPOSED IN-SERVICE DATE: JULY 2005
CASE STUDY 1: HEAVY SUMMER PRE-PROJECT

N-2: BAILEY-PASTORIA 230 KV
PARDEE-PASTORIA 230 KV

c:\psls\13\calpine\pt expand
c:\psls\13\calpine\pt expand
Rating = 1

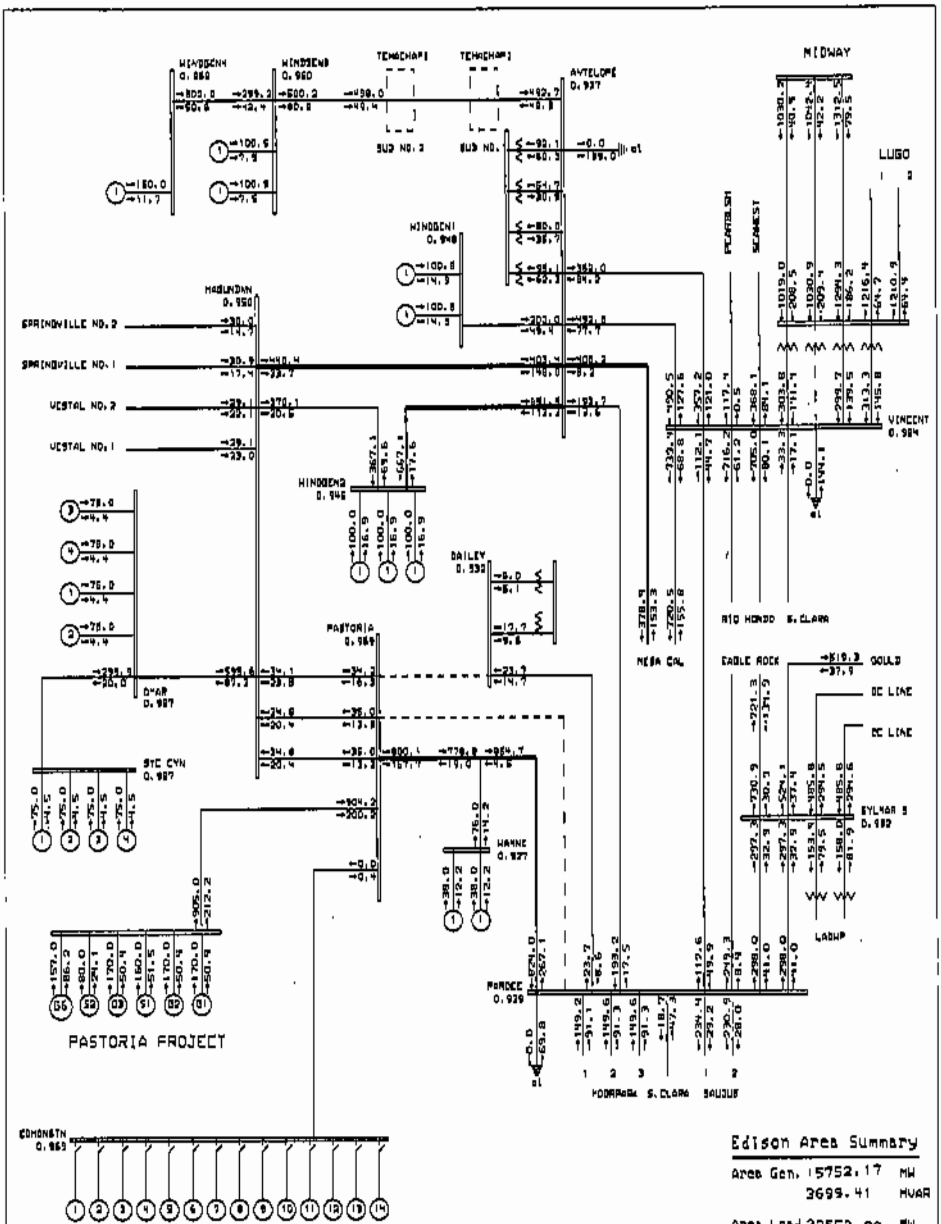

Edison Area Summary

Area Gen. 15752.17 MW
3699.41 MVAR

Area Load 22553.00 MW

BIG CREEK CORRIDOR

230 SYSTEM

MW/MVAR Thu May 05 16:23:31 2005

General Electric International, Inc. PSLF Program

GENERAL ELECTRIC COMPANY	COLPINE PASTORIA ADDITION - SYSTEM IMPACT STUDY PROPOSED IN-SERVICE DATE: JULY 2005 CASE STUDY 2: HEAVY SUMMER POST- PROJECT	H-2: BAILEY-PASTORIA 230 KV MANDEE-PASTORIA 230 KV	c:\wpsf\31\colpi\rev\ref expand c:\wpsf\31\colpi\rev\ref expand fdtlrg - 1

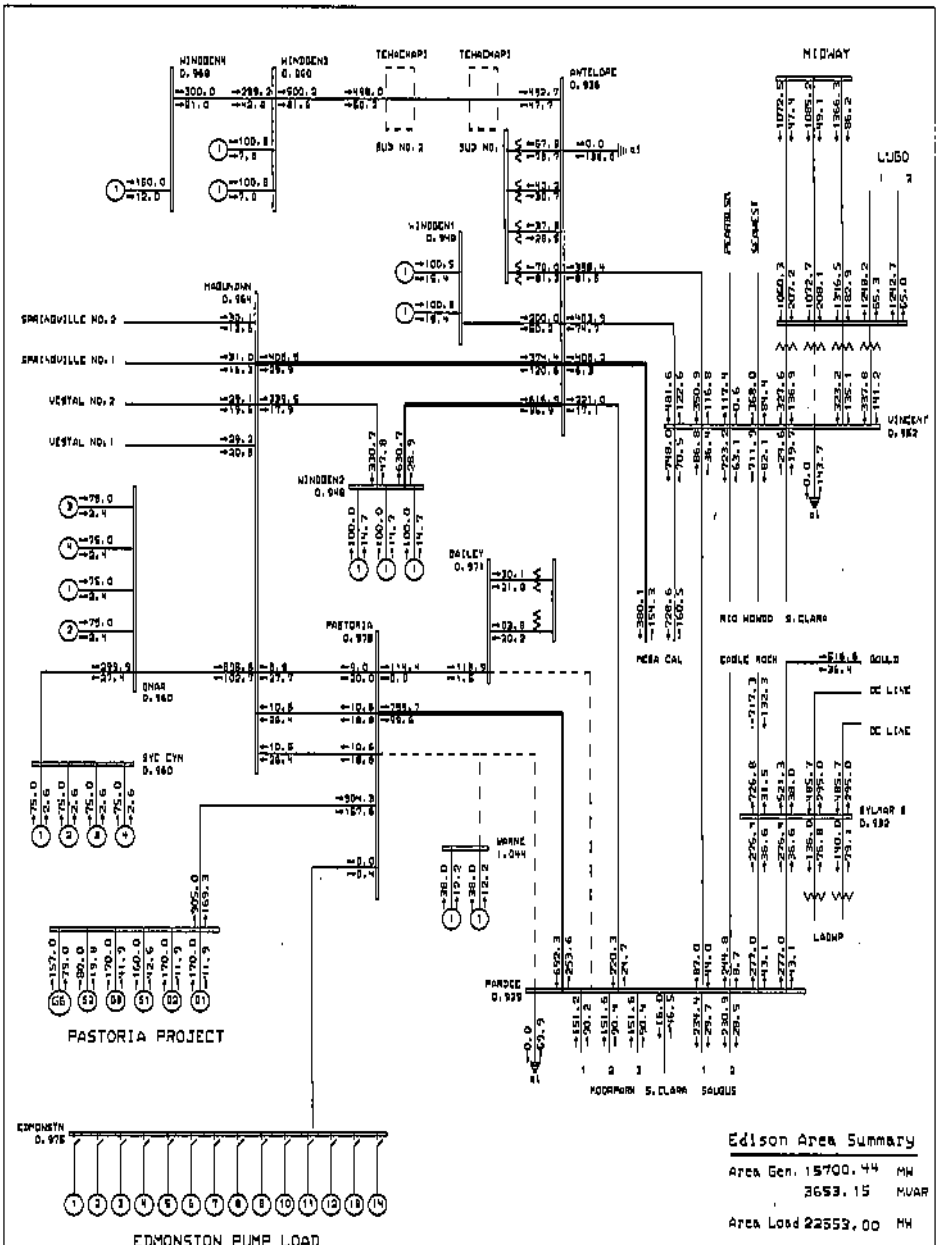
WINDDEN4
0.960
WINDDEN3
0.950
TEHACHAP3
TEHACHAP1
ANTELOPE
0.936
MIDWAY
LUGO
SUB NO. 2
SUB NO. 1
WINDDEN1
0.949
MADUNDAN
0.964
SPRINGVILLE NO. 2
SPRINGVILLE NO. 1
VESTAL NO. 2
VESTAL NO. 1
WINDDEN2
0.948
BAILEY
0.971
PASTORIA
0.978
PICARDIA
SCHEMEST
VINCENT
0.952
RIO HONDO
S. CLARA
MESA CAL
EAGLE ROCK
GOULD
DC LINE
DC LINE
SYLMAR 8
0.932
LADWP
DNAR
0.960
SYC CYN
0.960
WARNE
1.044
PARDEE
0.929
MOORPARK
S. CLARA
SAUGUS
PASTORIA PROJECT
EDMONSTN
0.976
EDMONSTON PUMP LOAD
Edison Area Summary
Area Gen. 15700.44 MW
3653.15 MVAR
Area Load 22553.00 MW
BIG CREEK CORRIDOR
230 SYSTEM
MOORPARK
Tue May 03 15:57:10 2005
General Electric International, Inc. PSLF Program
GENERAL ELECTRIC COMPANY
DALPINE PASTORIA ADDITION - SYSTEM IMPACT STUDY
PROPOSED IN-SERVICE DATE: JULY 2005
CASE STUDY 2: HEAVY SUMMER POST- PROJECT
H-2: BAILEY-PARDEE 230 KV
PARDEE-PASTORIA-WARNE 230 KV

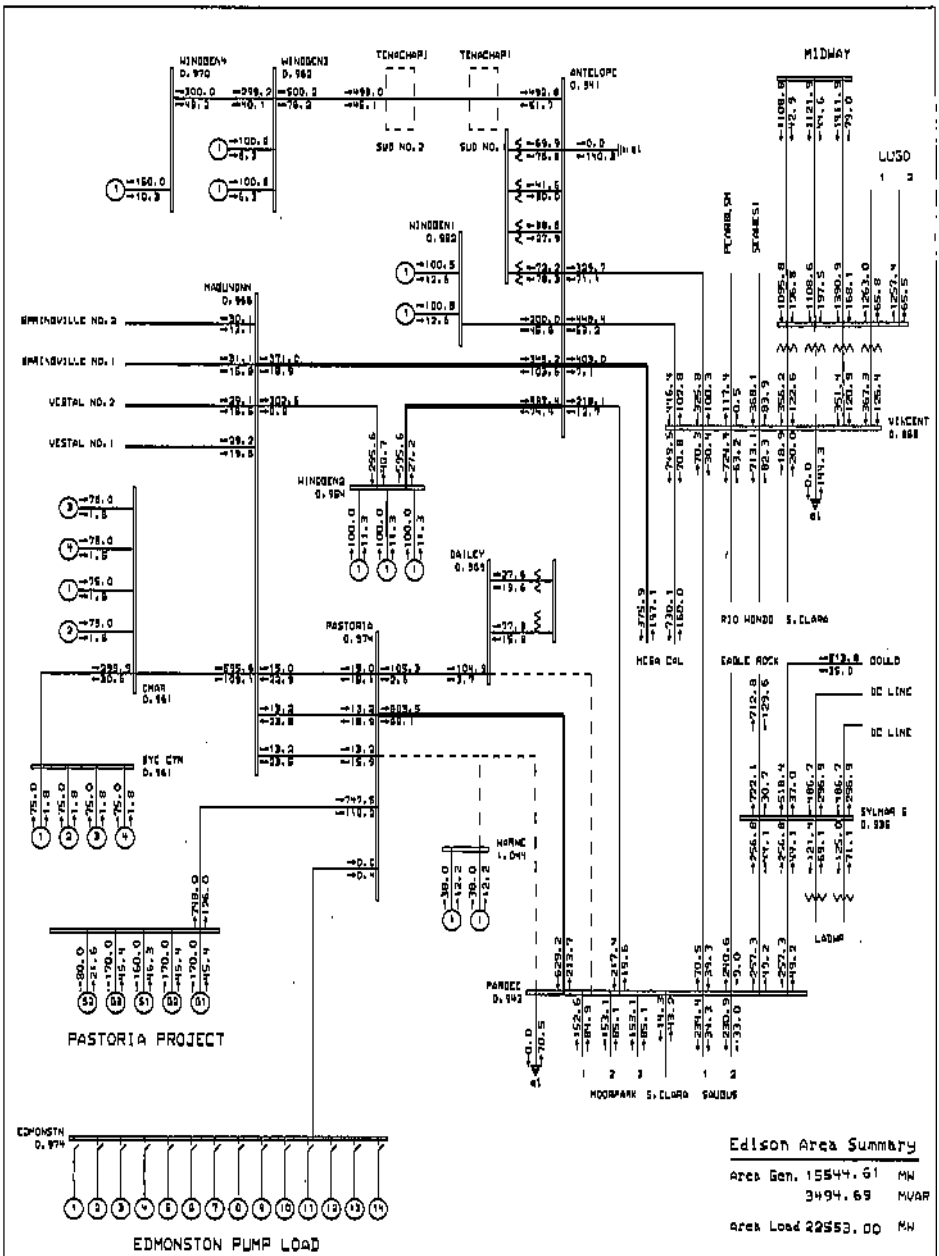
WINDGEN4
WINDGEN3
TEHACHAPI
TEHACHAPI
ANTELOPE
MIDWAY
SUB NO. 2
SUB NO.
LUGO
WINDGEN1
MAGUNDNN
BARIMOVILLE NO. 2
BARIMOVILLE NO. 1
VESTAL NO. 2
VESTAL NO. 1
WINDGEN2
DAILEY
PASTORIA
CHAR
BYC CTN
HORNE
PANDEE
MOORPARK
S.CLARA
SAUGUS
VINCENT
RIO HONDO
S.CLARA
MESA CAL
EAGLE ROCK
GOULD
DC LINE
DC LINE
SYLMAR E
LADWP
PASTORIA PROJECT
EDMONSTN
EDMONSTON PUMP LOAD
Edison Area Summary
Area Gen. 15544.61 MW
3494.69 MVAR
Area Load 22553.00 MW
BIG CREEK CORRIDOR
230 SYSTEM
GENERAL ELECTRIC COMPANY
CALPINE PASTORIA ADDITION - SYSTEM IMPACT STUDY
PROPOSED IN-SERVICE DATE: JULY 2006
CASE STUDY 1: HEAVY SUMMER PRE-PROJECT
h-2: DAILEY-PANDEE 230 KV
PANDEE-PASTORIA-HORNE 230 KV

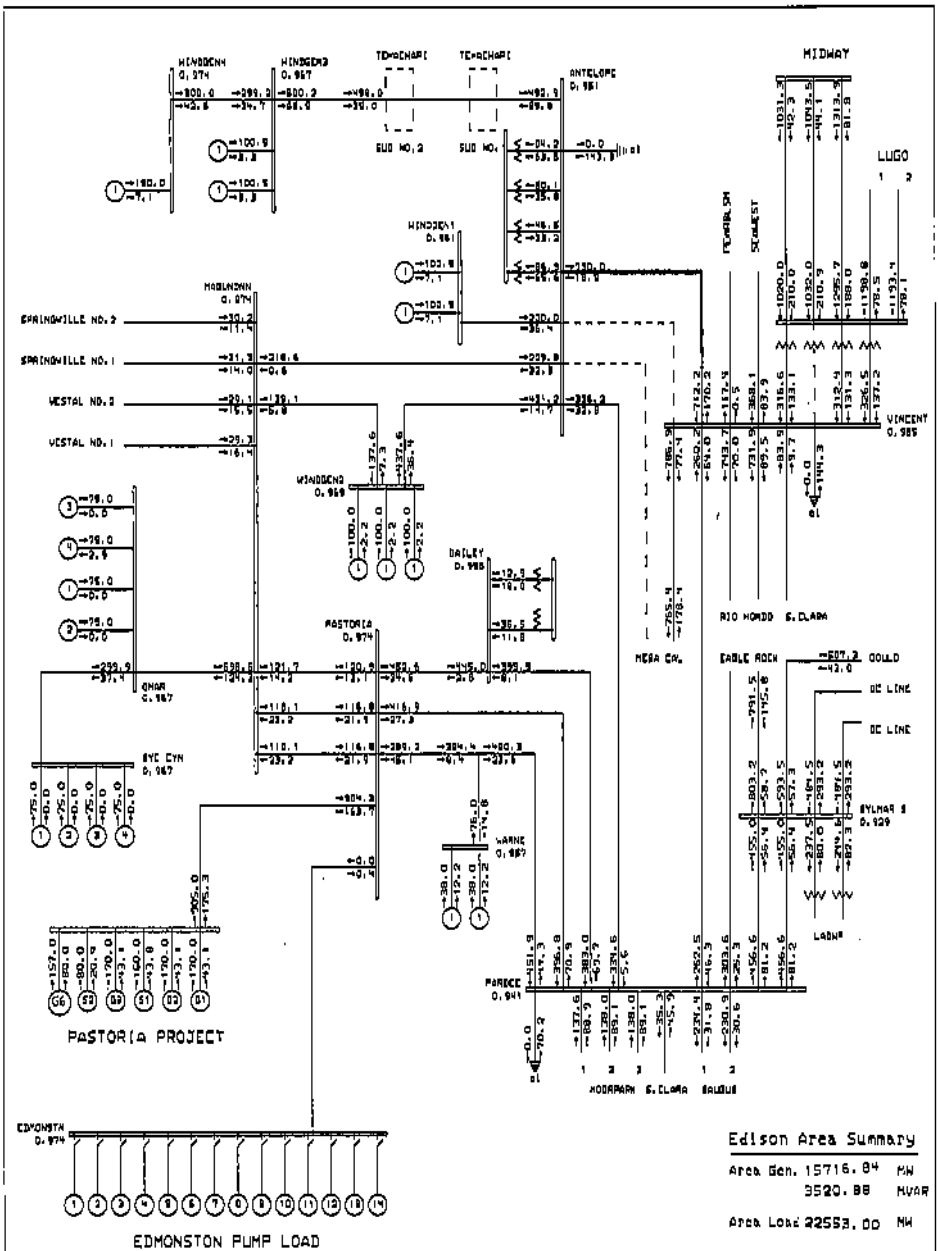

Edison Area Summary

Area Gen. 15716.84 MW
3520.88 MVAR

Area Load 22553.00 MW

BIG CREEK CORRIDOR

230 SYSTEM

PSAVANAR Thu May 05 16:02:58 2005

General Electric International, Inc. PSLF Program

GENERAL ELECTRIC COMPANY

CALPINE PASTORIA ACCLITIBW - SYSTEM IMPACT STUDY
PROPOSED IN-SERVICE DATE: JULY 2006
CASE STUDY 2: HEAVY SUMMER POST- PROJECT

N-2: NEW ANTELOPE-VINCENT 230 KV
ANTELOPE-MESA 230 KV

c:\ups\fl31\cal\pfnet\pef ezpsyd
c:\ups\fl31\cal\pfnet\pef ezpsyd
Rating = 1

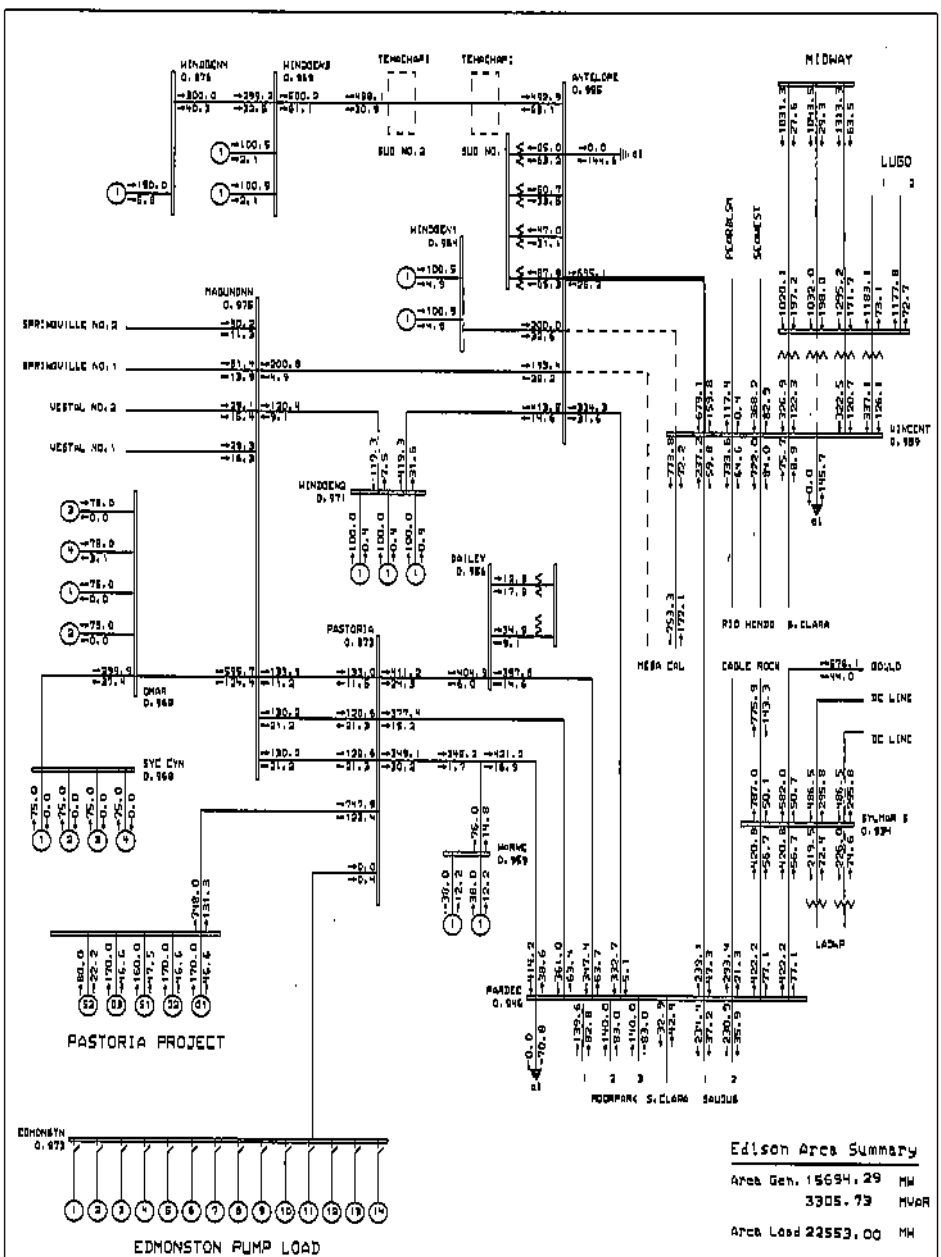

Edison Area Summary

Area Gen. 15694.29 MW
3305.73 MVAR

Area Load 22553.00 MW

BIG CREEK CORRIDOR
230 SYSTEM

General Electric International, Inc. PSLF Program

GENERAL ELECTRIC COMPANY

CALPINE PASTORIA ADDITION - SYSTEM IMPACT STUDY
PROPOSED IN-SERVICE DATE: JULY 2006
CASE STUDY 1: HEAVY SUMMER PRE-PROJECT

N-2: NEW ANTELOPE-VINCENT 230 KV
ANTELOPE-MESA 230 KV

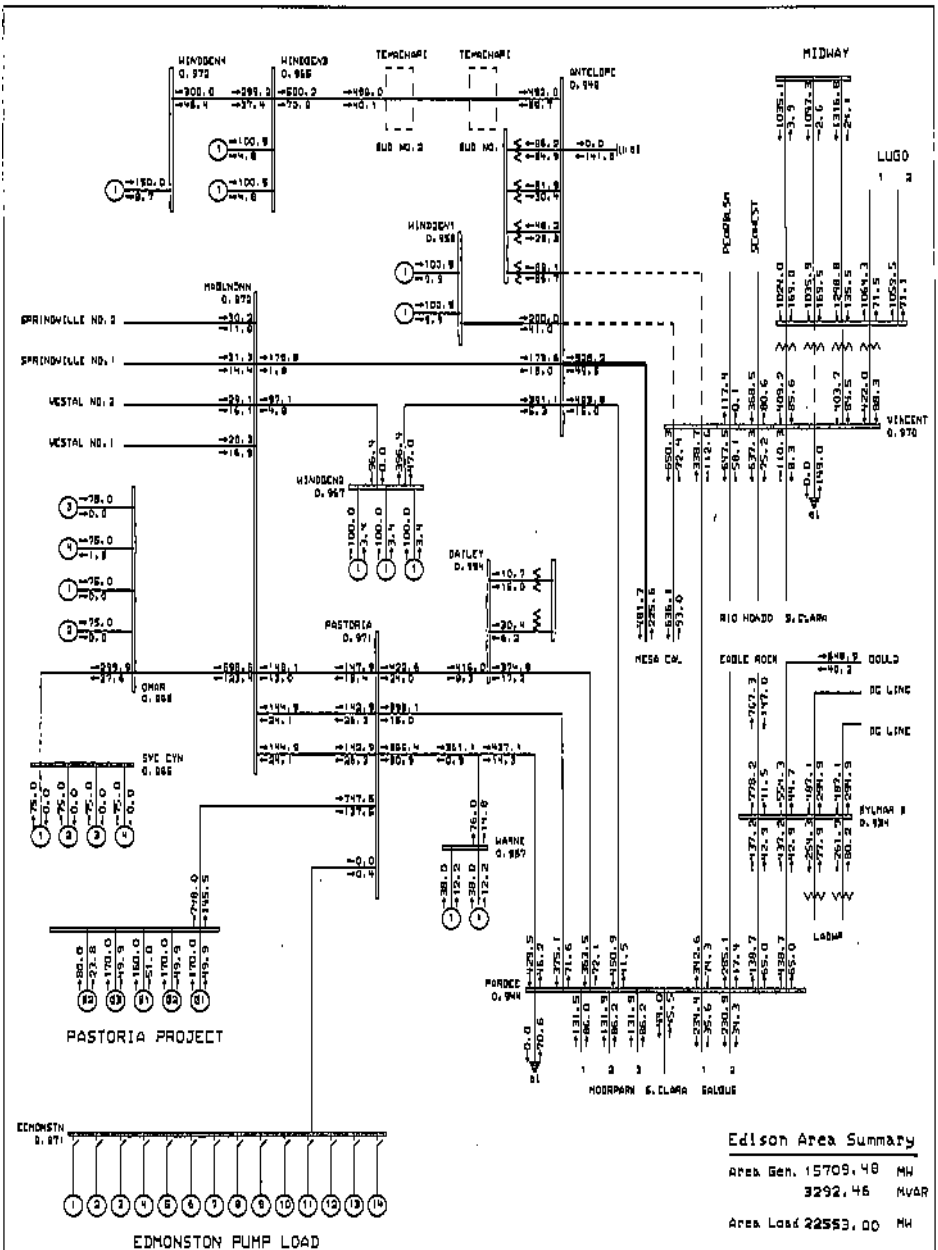

Edison Area Summary

Area Gen. 15709.48 MW
3292.46 MVAR

Area Load 22553.00 MW

BIG CREEK CORRIDOR
230 SYSTEM

General Electric International, Inc. PSLF Program

GENERAL ELECTRIC COMPANY

SALPINE PASTORIA ADDITION - SYSTEM IMPACT STUDY
PROPOSED IN-SERVICE DATE: JULY 2006
CASE STUDY 1: HEAVY SUMMER PRE-PROJECT

W-2: EXISTING ANTELOPE-VINCENT 230 KV
NEW ANTELOPE-VINCENT 230 KV

Tue May 03 14:23:16 2005

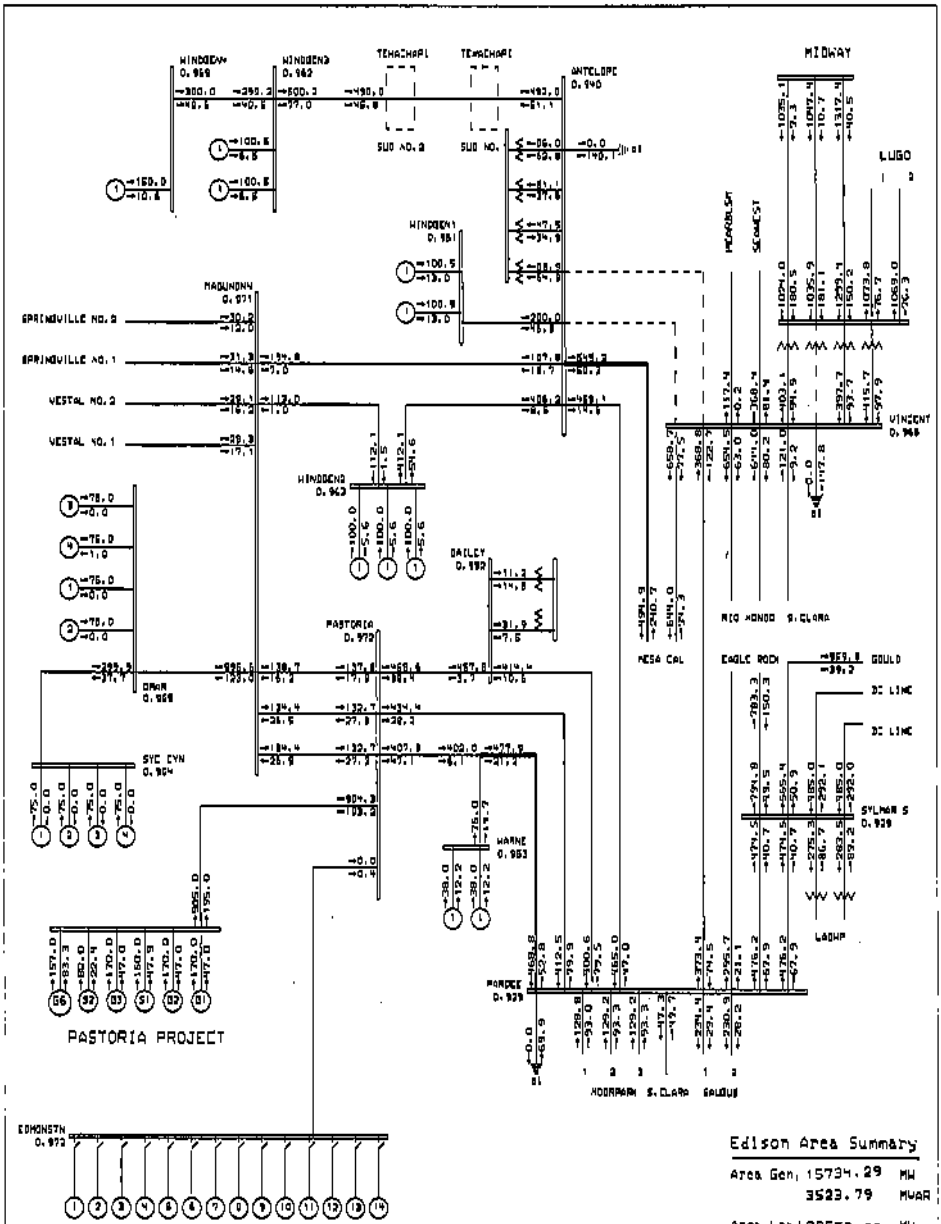
WINDCAN
WINDCEN3
TEHACHAPI
TEHACHAPI
ANTELOPE
MIDWAY
SUB NO. 2
SUB NO.
LUGO
WINDCEN1
MADUNDNY
SPRINGVILLE NO. 2
SPRINGVILLE NO. 1
VESTAL NO. 2
VESTAL NO. 1
WINDCEN2
DAILEY
PASTORIA
MCKINLEY ST
SEGNE ST
VINCENT
RIO HONDO
S. CLARA
MESA CAL
EAGLE ROCK
GOULD
DC LINE
DC LINE
SYLMAR S
LADWP
SYC CYN
WARNE
PANDEE
HOORPARK
S. CLARA
SALGUS
PASTORIA PROJECT
EDMONSTN
EDMONSTON PUMP LOAD
Edison Area Summary
Area Gen; 15734.29 MW
3523.79 MVAR
Area Load 22553.00 MW
BIG CREEK CORRIDOR
230 SYSTEM
GENERAL ELECTRIC COMPANY
CALPINE PASTORIA ADDITION - SYSTEM IMPACT STUDY
PROPOSED IN-SERVICE DATE: JULY 2006
CASE STUDY: NOMW SUMMER PRE1- PROJECT
IN-2: EXISTING ANTELOPE-VINCENT 230 KV
NEW ANTELOPE-VINCENT 230 KV

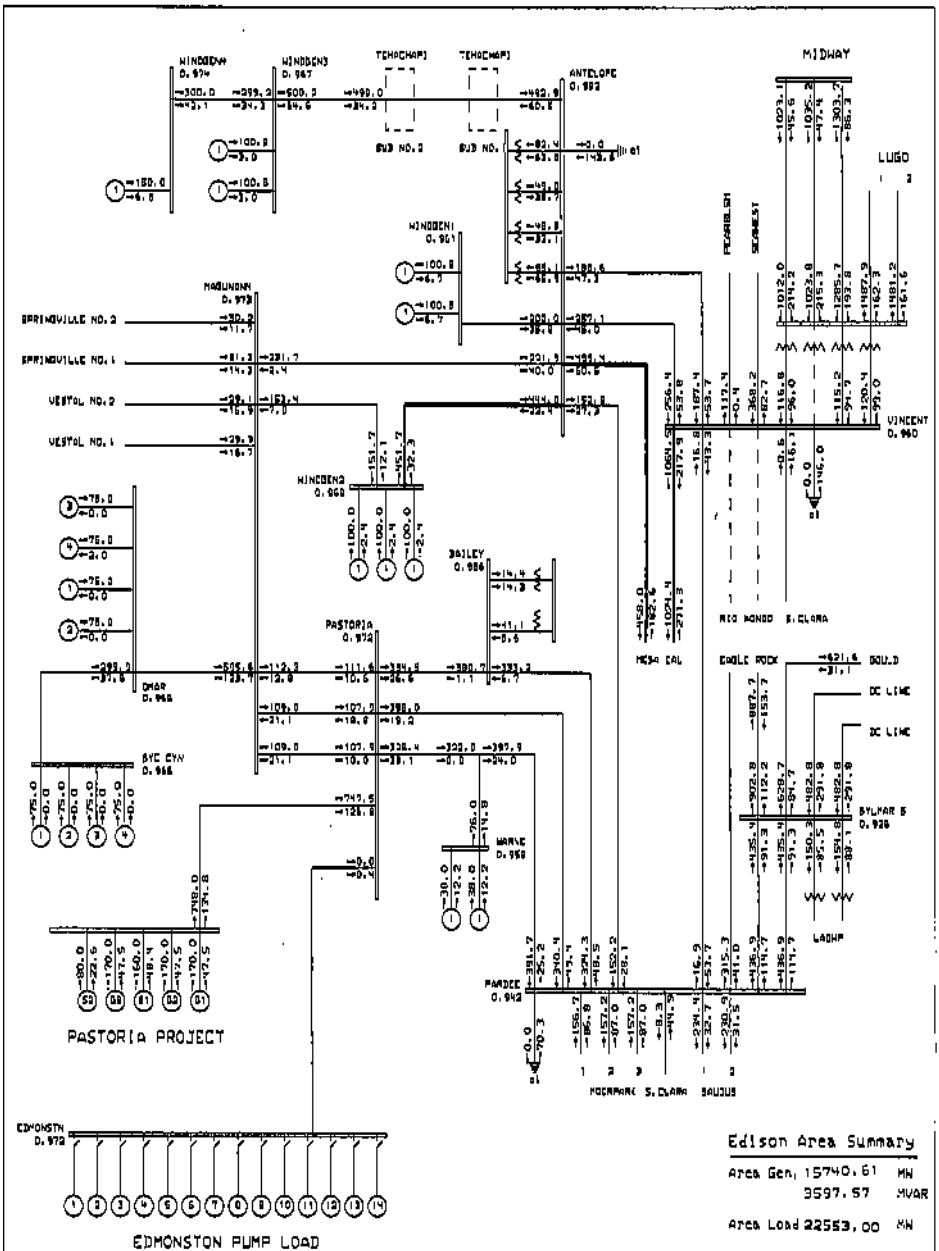
WINDDEN4
0.974
WINDDEN3
0.967
TEHACHAP1
TEHACHAP1
ANTELOPE
0.992
MIDWAY
SUB NO. 2
SUB NO.
LUGO
WINDDEN1
0.961
MOJUNDN4
0.973
SPRINGVILLE NO. 2
SPRINGVILLE NO. 1
VESTAL NO. 2
VESTAL NO. 1
PEARBLSM
SCHMEST
VINCENT
0.990
WINDDEN2
0.969
BAILEY
0.986
PASTORIA
0.972
RIO HONDO
S.CLARA
MESA CAL
EAGLE ROCK
DC LINE
DC LINE
DMAR
0.968
SYC CYN
0.968
BYLNAR 5
0.926
WARVE
0.958
LADWP
PARDEE
0.942
MOORPARK
S.CLARA
SAUGUS
PASTORIA PROJECT
EDMONSTN
0.972
EDMONSTON PUMP LOAD
Edison Area Summary
Area Gen, 15740.61 MW
3597.57 MVAR
Area Load 22553.00 MW
BIG CREEK CORRIDOR
230 SYSTEM
MW/MVAR
Tue May 03 14:35:02 2005
General Electric International, Inc. PSLF Program
GENERAL ELECTRIC COMPANY
CALPINE PASTORIA 400110X - SYSTEM IMPACT STUDY
PROPOSED IN-SERVICE DATE: JULY 2005
CASE STUDY 1: HIGHWY SUMMER PRE-PROJECT
H-2: RIO HONDO-VINCENT NO. 1 230 KV
RIO HONDO-VINCENT NO. 2 230 KV
c:\wpsf\13\calpi\rel\pf export
c:\wpsf\13\calpi\rel\pf export
Rating - 1

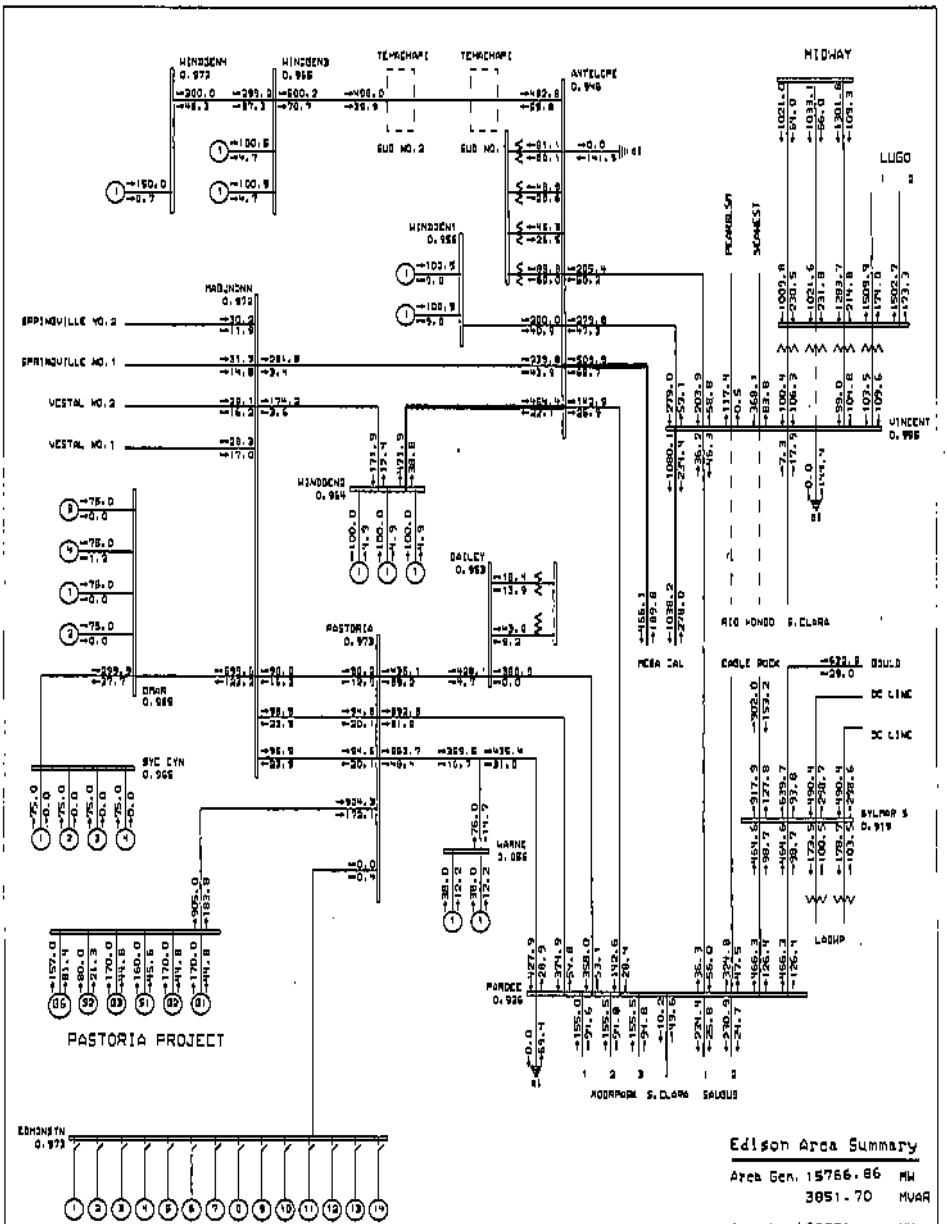
WINDSENN 0.972
WINDSEN3 0.955
TEMACHAPI
TEMACHAPI
ANTELOPE 0.946
SUB NO.2
SUB NO.
MIDWAY
LUGO
WINDSEN1 0.956
MADJCNNN 0.972
SPRINGVILLE NO.2
SPRINGVILLE NO.1
VESTAL NO.2
VESTAL NO.1
WINDSEN2 0.964
DAILEY 0.953
PASTORIA 0.973
OMAR 0.989
SYC CYN 0.969
WARNE 0.986
PANDEE 0.926
VINCENT 0.996
RIO HONDO S.CLARA
EAGLE ROCK
BOUL.D
DC LINE
DC LINE
SYLMAR S 0.919
LADWP
MOORPARK S.CLARA
SAUGUS
PASTORIA PROJECT
EDMONSTN 0.973
EDMONSTON PUMP LOAD
Edison Area Summary
Area Gen. 15766.86 MW
3851.70 MVAR
Area Load 22553.00 MW
BIG CREEK CORRIDOR
230 SYSTEM
GENERAL ELECTRIC COMPANY
CALPINE PASTORIA ADDITION - SYSTEM IMPACT STUDY
PROPOSED IN-SERVICE DATE: JULY 2006
CASE STUDY 2: HEAVY SUMMER POST-PROJECT
RIO HONDO-VINCENT NO.1 230 KV
RIO HONDO-VINCENT NO.2 230 KV

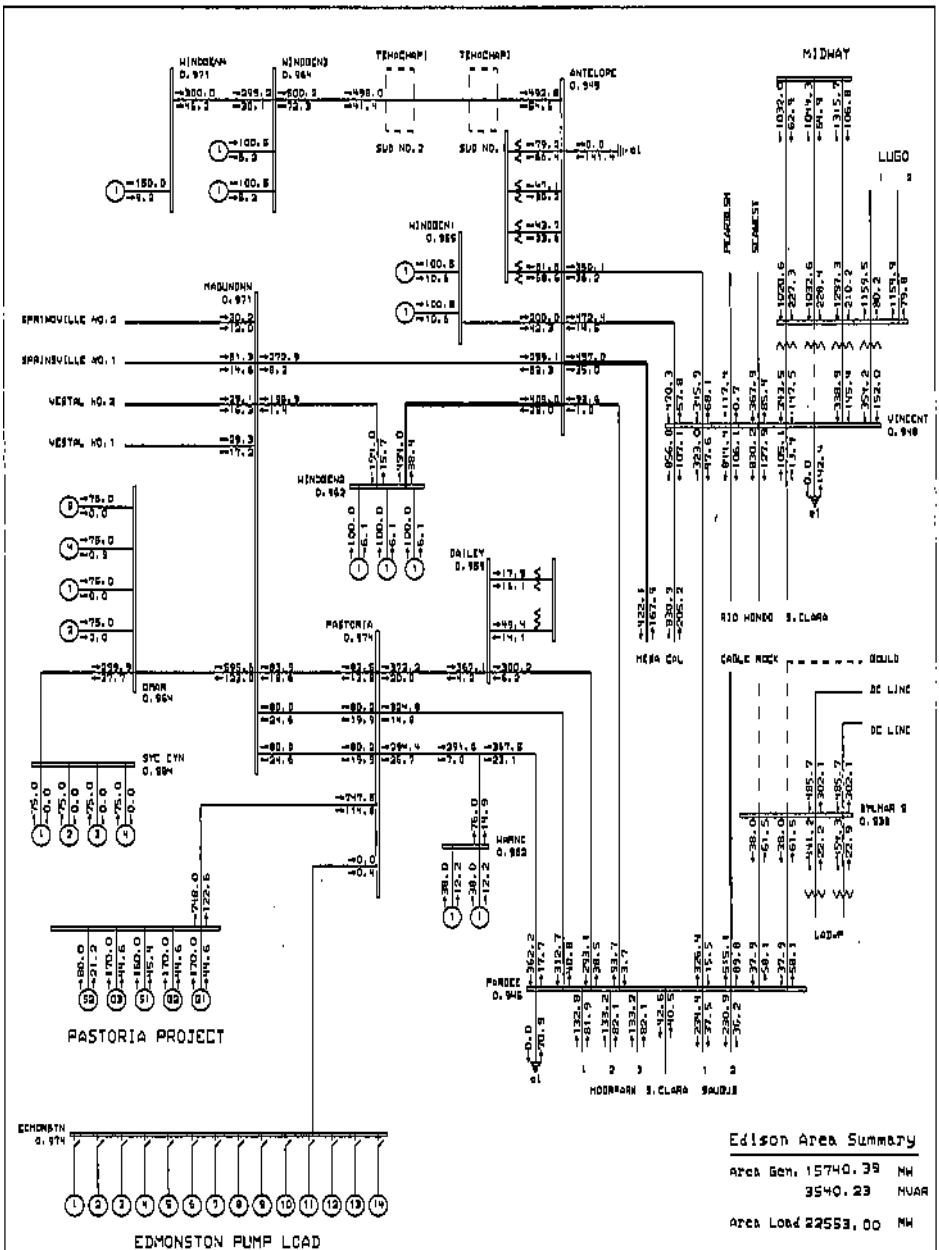

Edison Area Summary

Area Gen. 15740.39 MW
3540.23 MVAR

Area Load 22553.00 MW

BIG CREEK CORRIDOR
230 SYSTEM

General Electric International, Inc. PSLF Program

MAPMAKER Tue May 03 15:01:17 2005

GENERAL ELECTRIC COMPANY

CALPINE PASTORIA ADDITION - SYSTEM IMPACT STUDY
PROPOSED IN-SERVICE DATE: JULY 2006
CASE STUDY 1: HEAVY SUMMER PRE-PROJECT

4-21 GOULD-BYLNAR 230 KV
EAGLE ROCK-BYLNAR 230 KV

c:\slpf\f93\local\pastpjct expand
c:\slpf\f93\local\pastpjct expand
Rating = 1

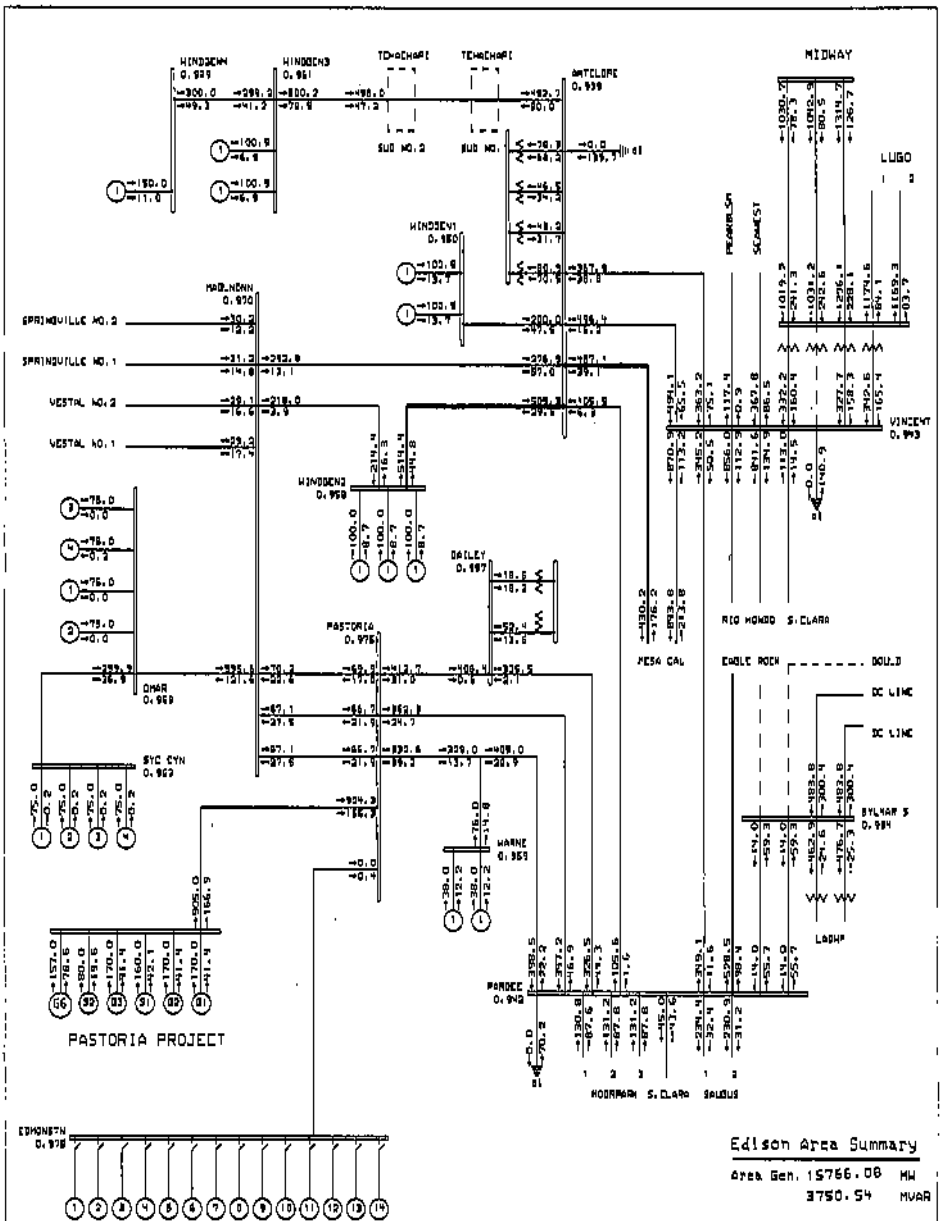
MIDWAY
LUGO
SPRINGVILLE NO.2
SPRINGVILLE NO.1
VESTAL NO.2
VESTAL NO.1
VINCENT
RIO HONDO
S.CLARA
MESA CAL
EAGLE ROCK
DOUD
DC LINE
DC LINE
SYLMAR S
LADWP
PASTORIA PROJECT
EDMONSTON PUMP LOAD
Edison Area Summary
Area Gen. 15766.08 MW
3750.54 MVAR
Area Load 22553.00 MW
BIG CREEK CORRIDOR
230 SYSTEM
GENERAL ELECTRIC COMPANY

APPENDIX B

LIGHT SPRING
POWER FLOW PLOTS

WITHOUT VENTURA
AREA GENERATION

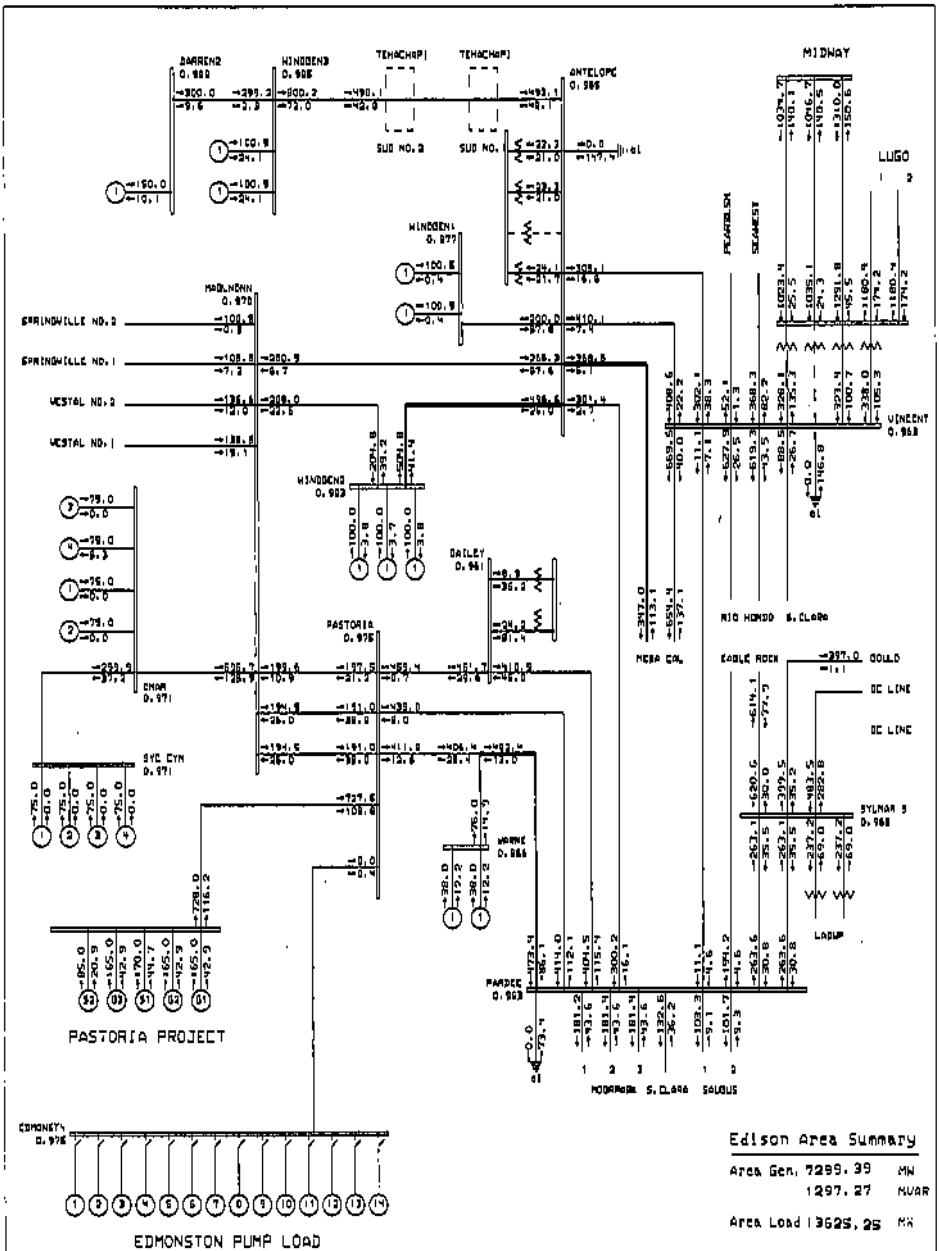
BARREN2
0.980
WINDDEN3
0.985
TEHACHAP1
TEHACHAP1
ANTELOPE
0.986
MIDWAY
SUB NO. 2
SUB NO. 1
LUGO
WINDDEN1
0.977
MADONNA
0.970
SPRINGVILLE NO. 2
SPRINGVILLE NO. 1
VESTAL NO. 2
VESTAL NO. 1
PEARLSOX
SEAWEST
VINCENT
0.958
WINDDEN2
0.983
DAILEY
0.961
PASTORIA
0.975
MIO HONDO
S. CLARA
MESA CAL
EAGLE ROCK
GOULD
DC LINE
DC LINE
CMAR
0.971
SYC CYN
0.971
SYLMAR 5
0.968
LADWP
MORNE
0.986
PARDEE
0.983
MOORPARK
S. CLARA
SOLDUS
PASTORIA PROJECT
EDMONSTON
0.978
EDMONSTON PUMP LOAD
Edison Area Summary
Area Gen. 7299.39 MW
1297.27 MVAR
Area Load 13625.25 MW
BIG CREEK CORRIDOR
230 SYSTEM
General Electric International, Inc. PSLF Program
GENERAL ELECTRIC COMPANY
CALPINE PASTORIA ADDITION- SYSTEM IMPACT STUDY
PROPOSED IN-SERVICE DATE: JULY 2007
CASE STUDY 3 PRE-PROJECT LSP WITHOUT VSCNI
N-00 BASE CASE

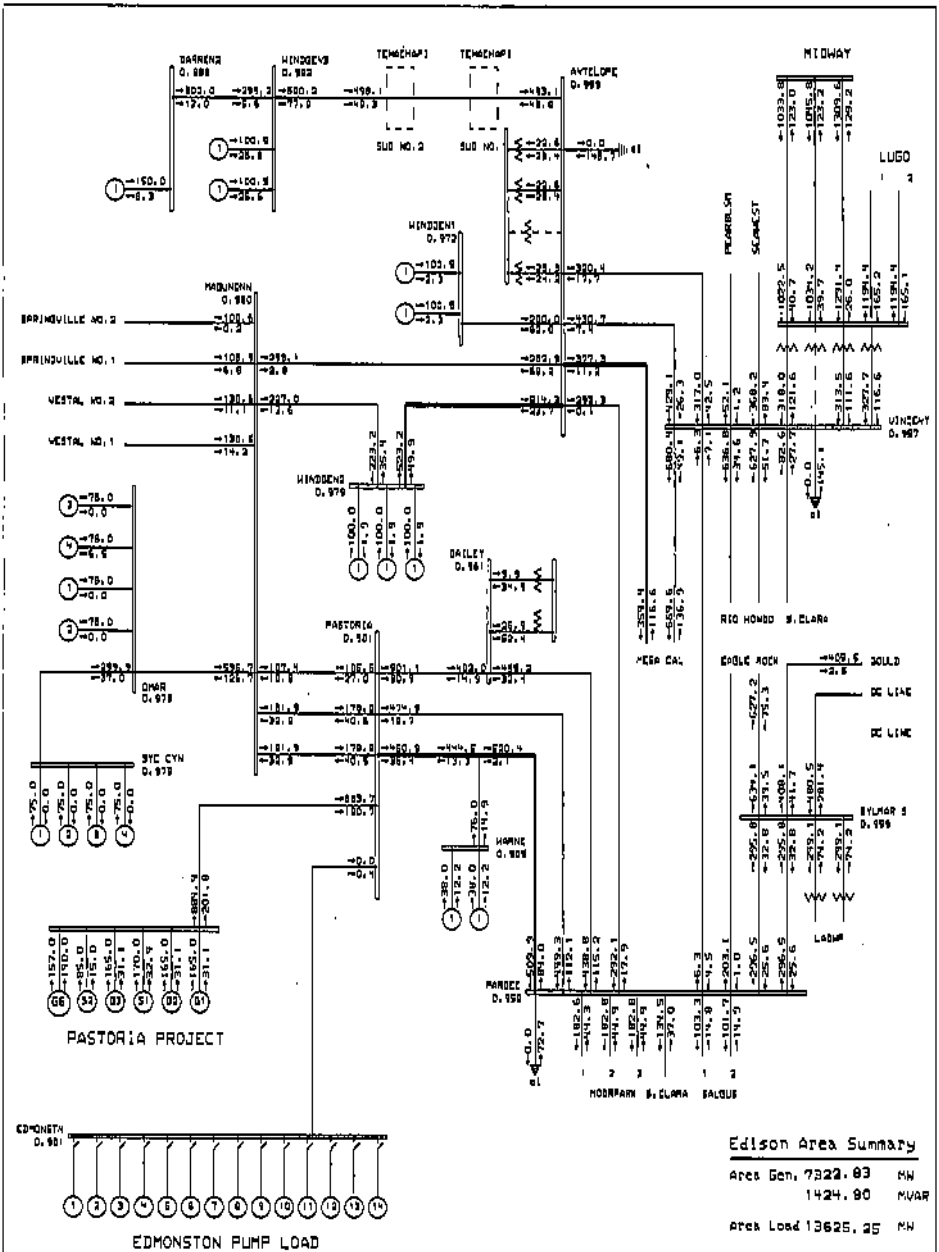
BARRENR
WINDDEN3
TEHACHAP1
TEHACHAP1
ANTELOPE
MIDWAY
LUGO
SUB NO.2
SUB NO.1
WINDDEN1
MADUNENN
BARINDVILLE NO.2
BARINDVILLE NO.1
WESTAL NO.2
WESTAL NO.1
WINDDEN2
DAILEY
PASTORIA
DINAR
SYC CYN
HAMNE
PANDEE
MOORPARK
S.CLARA
SALGUS
PEARBLSM
SCANCST
VINCENT
RIO HONDO
S.CLARA
MESA CAL
EAGLE ROCK
SOLLD
DC LINE
DC LINE
SYLMAR S
LADWP
PASTORIA PROJECT
EDMONSTN
EDMONSTON PUMP LOAD
Edison Area Summary
Area Gen. 7322.03 MW
1424.90 MVAR
Area Load 13625.25 MW
BIG CREEK CORRIDOR
230 SYSTEM
General Electric International, Inc. PSLF Program
GENERAL ELECTRIC COMPANY
CALPINE PASTORIA ADDITION- SYSTEM IMPACT STUDY
PROPOSED IN SERVICE DATE: JULY 2006
CASE STUDY 4: POST-PROJECT LSP (WITHOUT VENTURA GENERATION)
BASE CASE

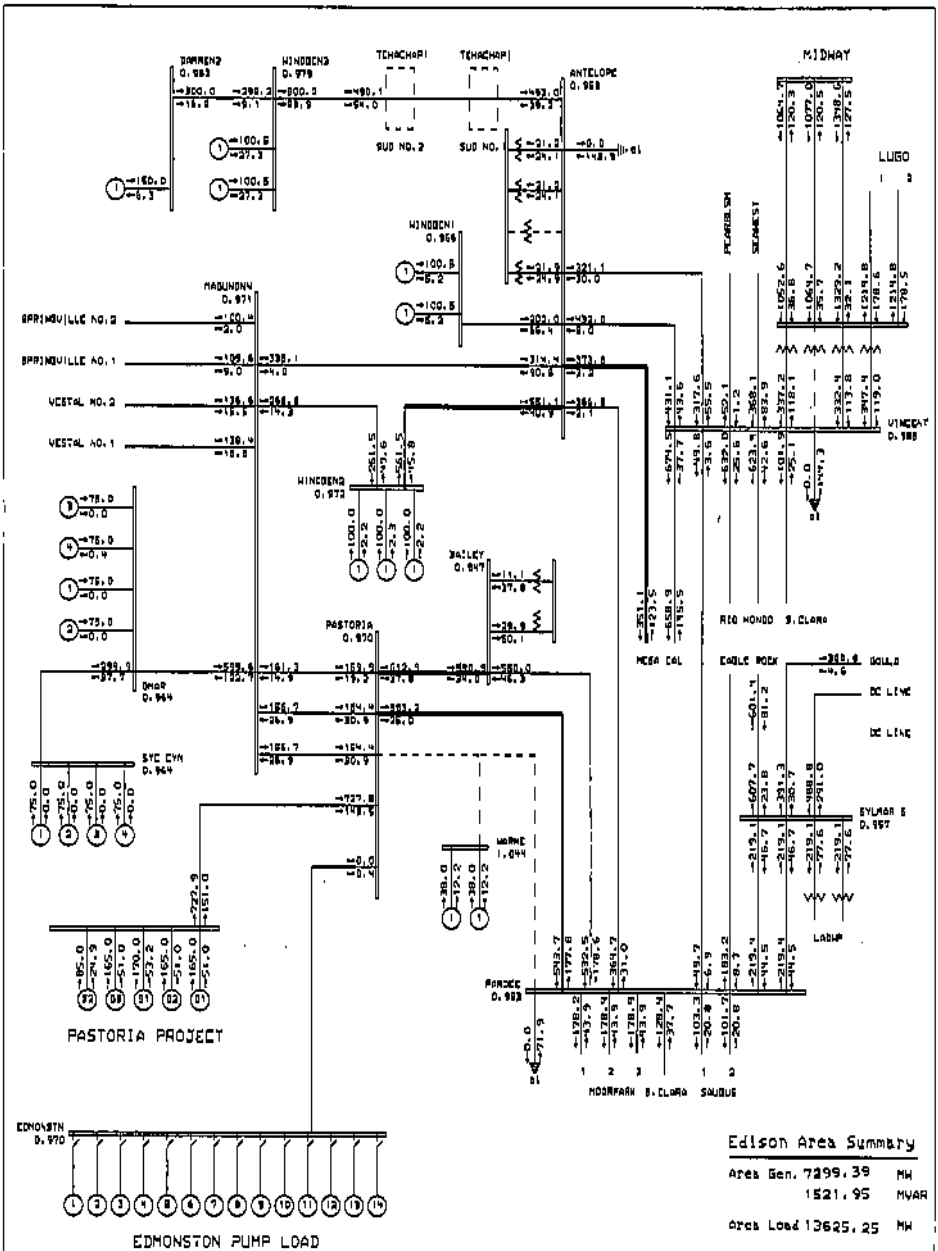

Edison Area Summary

Area Gen. 7299.39 MW
1521.95 MVAR

Area Load 13625.25 MW

BIG CREEK CORRIDOR
230 SYSTEM
MAINMAP Wed May 04 09:31:56 2005

General Electric International, Inc. PSLF Program

GENERAL ELECTRIC COMPANY

CALPINE PASTORIA ADDITION- SYSTEM IMPACT STUDY
PROPOSED IN-SERVICE DATE: JULY 2006
CASE STUDY: PRE-PROJECT LSP WITHOUT VENTURA GEN

N-1: PARDEE-PASTORIA-WARNE 230 KV

c:\psfs\f3\bkal\pfnelper expand
c:\psfs\f3\bkal\pfnelper expand
Rating = 1

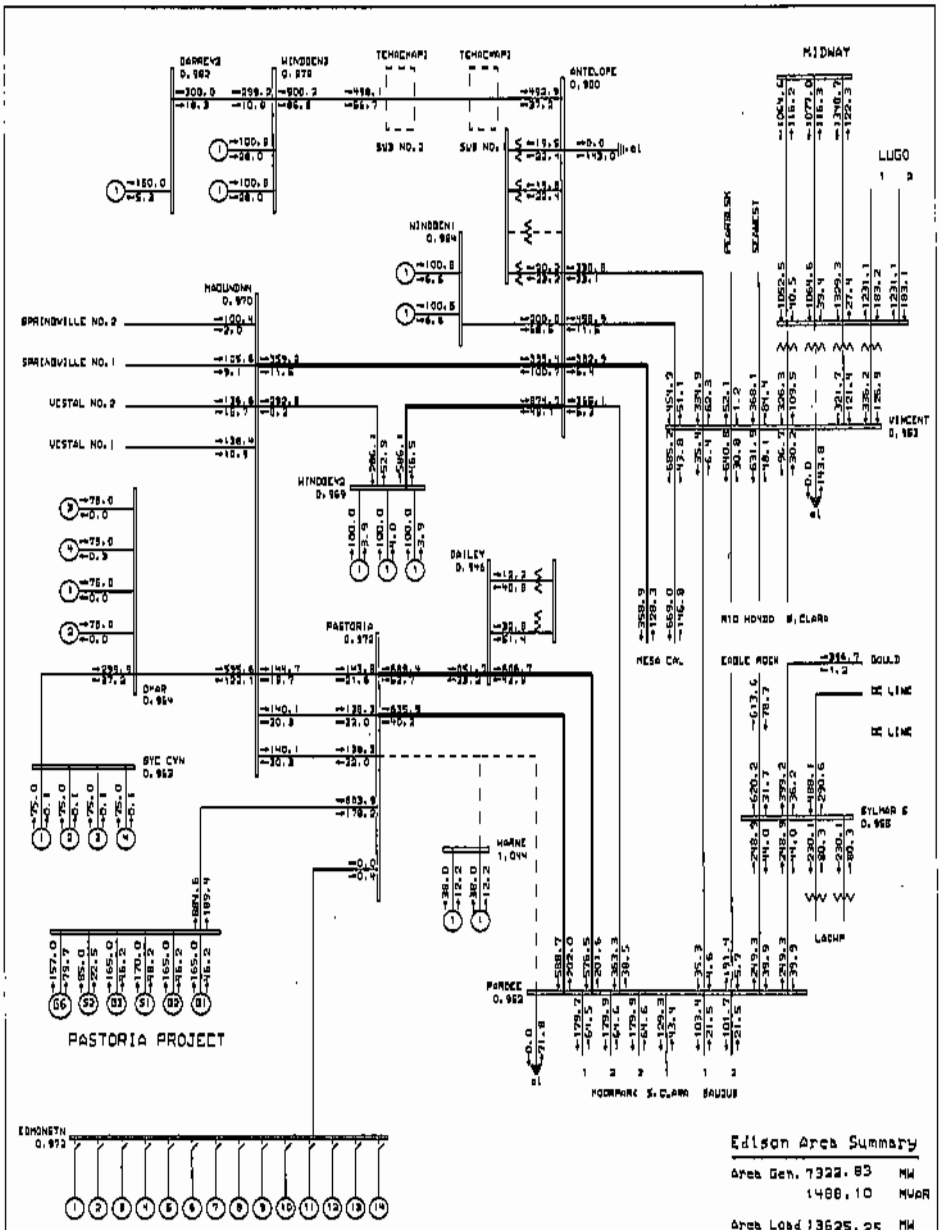
MIDWAY
LUGO
VINCENT
SPRINGVILLE NO. 2
SPRINGVILLE NO. 1
VESTAL NO. 2
VESTAL NO. 1
PASTORIA
MESA CA.
EAGLE ROCK
SYLMAR
LADWP
PARDEE
PASTORIA PROJECT
EDMONSTON PUMP LOAD
Edison Area Summary
Area Gen. 7322.83 MW
1488.10 MVAR
Area Load 13625.25 MW
BIG CREEK CORRIDOR
230 SYSTEM
GENERAL ELECTRIC COMPANY

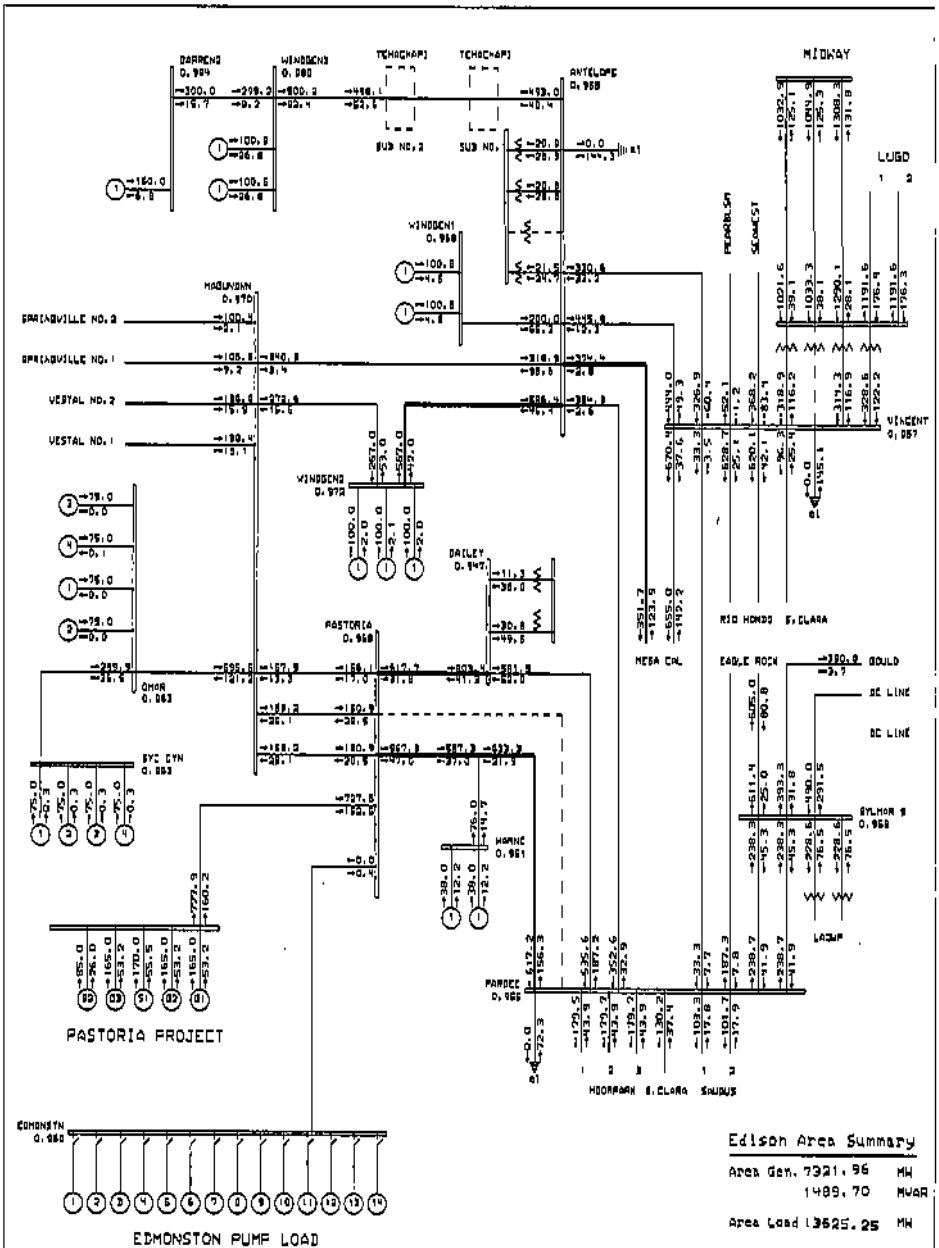
DARRENB 0.924
WINDDEN3 0.980
TEHACHAP1
TEHACHAP1
ANTELOPE 0.958
MIDWAY
SUB NO. 2
SUB NO. 1
LUGO
WINDDEN1 0.950
PEARDLSN
SEGMEST
MAGUNDAN 0.970
SPRINGVILLE NO. 2
SPRINGVILLE NO. 1
VESTAL NO. 2
VESTAL NO. 1
VINCENT 0.957
WINDDEN2 0.972
DAILEY 0.947
RIO HONDO
S.CLARA
PASTORIA 0.958
MESA CAL
EAGLE ROCK
GOULD
DC LINE
DC LINE
OMAR 0.963
SYC CYN 0.953
HAMNC 0.951
SYLMAR 3 0.958
LADWP
PARDEE 0.965
HOORNAN
S.CLARA
SOUDUS
PASTORIA PROJECT
EDMONSTN 0.950
EDMONSTON PUMP LOAD
Edison Area Summary
Area Gen. 7321.96 MW
1489.70 MVAR
Area Load 13625.25 MW
BIG CREEK CORRIDOR
230 SYSTEM
General Electric International, Inc. PSLF Program
GENERAL ELECTRIC COMPANY
CALPINE PASTORIA ADDITION- SYSTEM IMPACT STUDY
PROPOSED IN-SERVICE DATE: JULY 2006
CASE STUDY 2: PRE-PROJECT LSP (WITHOUT VENTURA GEN)
H-1: PARDEE-PASTORIA 230 KV

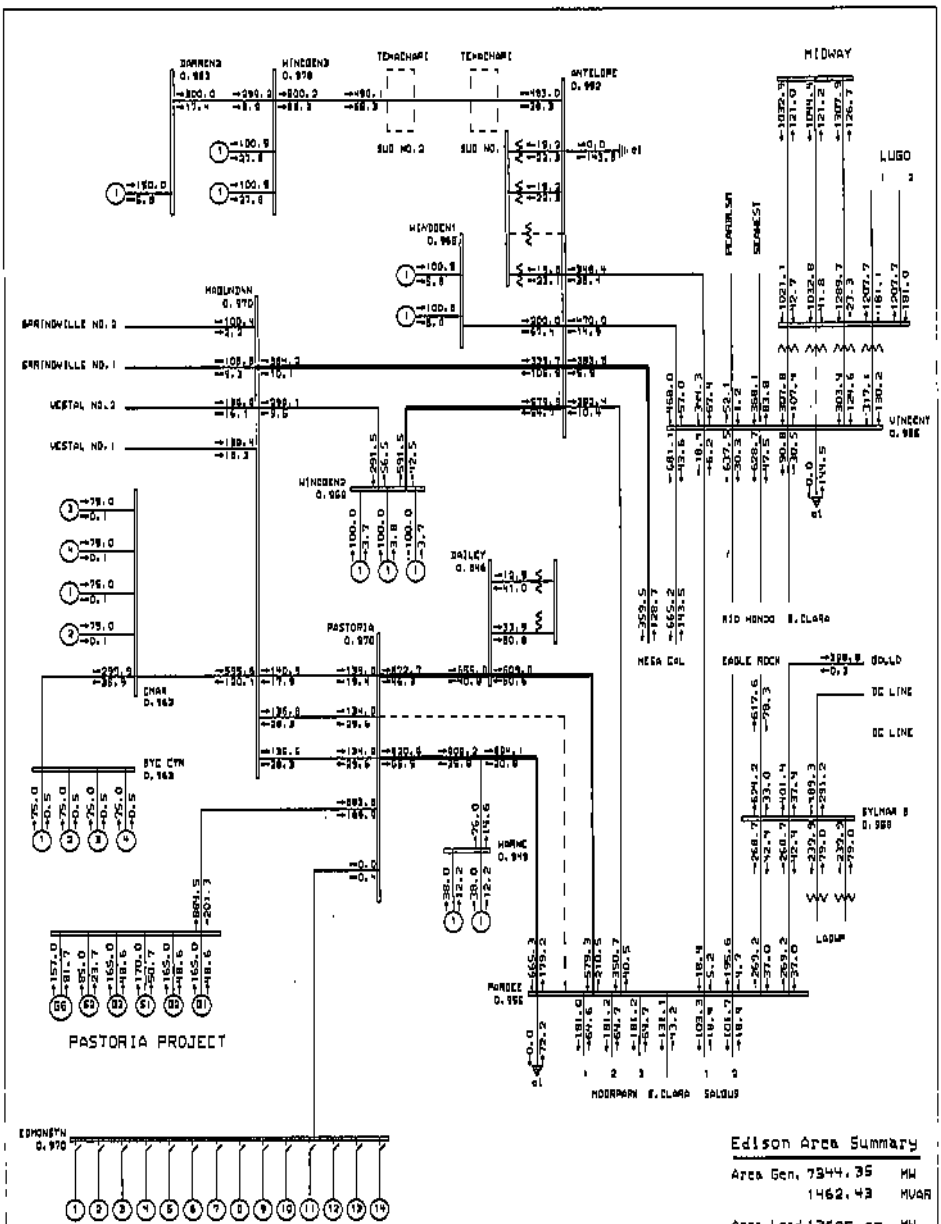

Edison Area Summary

Area Gen. 7344.35 MW
1462.43 MVAR

Area Load 13625.25 MW

BIG CREEK CORRIDOR
230 SYSTEM

MSUMMAR Wed May 04 11:10:52 2005

General Electric International, Inc. PSLF Program

GENERAL ELECTRIC COMPANY

CALPINE PASTORIA ADDITION SYSTEM IMPACT STUDY
PROPOSED IN SERVICE DATE: JULY 2006
CASE STUDY 4: POST-PROJECT LSP WITHOUT VENTURA GENERATION

W-11: MORDEE-PASTORIA 230 KV

c:\ups\f13\cal\proj\p7 expand
c:\ups\f13\cal\proj\p7 expand
Rating: 1

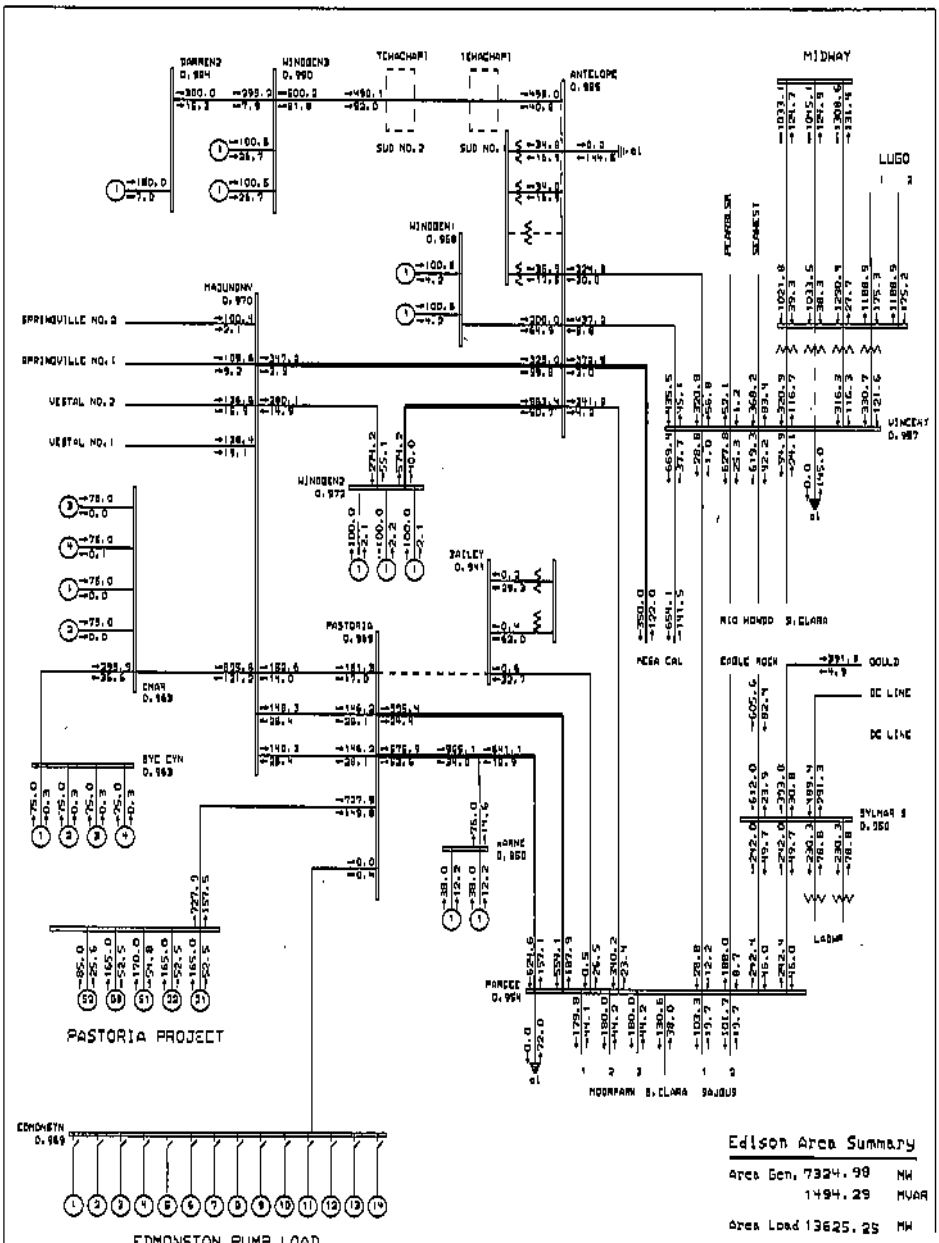

Edison Area Summary

Area Gen. 7324.99 MW
1494.29 MVAR

Area Load 13625.25 MW

BIG CREEK CORRIDOR
230 SYSTEM

MAYVAR Wed May 04 08:40:51 2005

General Electric International, Inc. PSLF Program

GENERAL ELECTRIC COMPANY

CALPINE PASTORIA ADDITION- SYSTEM IMPACT STUDY
PROPOSED IN-SERVICE DATE: JULY 2006
CASE STUDY: PRE-PROJECT CSP WITHOUT VENTURA ECHO

N-1: BAILEY-PASTORIA 230 KV

c:\wpsf\fbl\calpine\pjt expand
c:\wpsf\fbl\calpine\pjt expand
Rating = 1

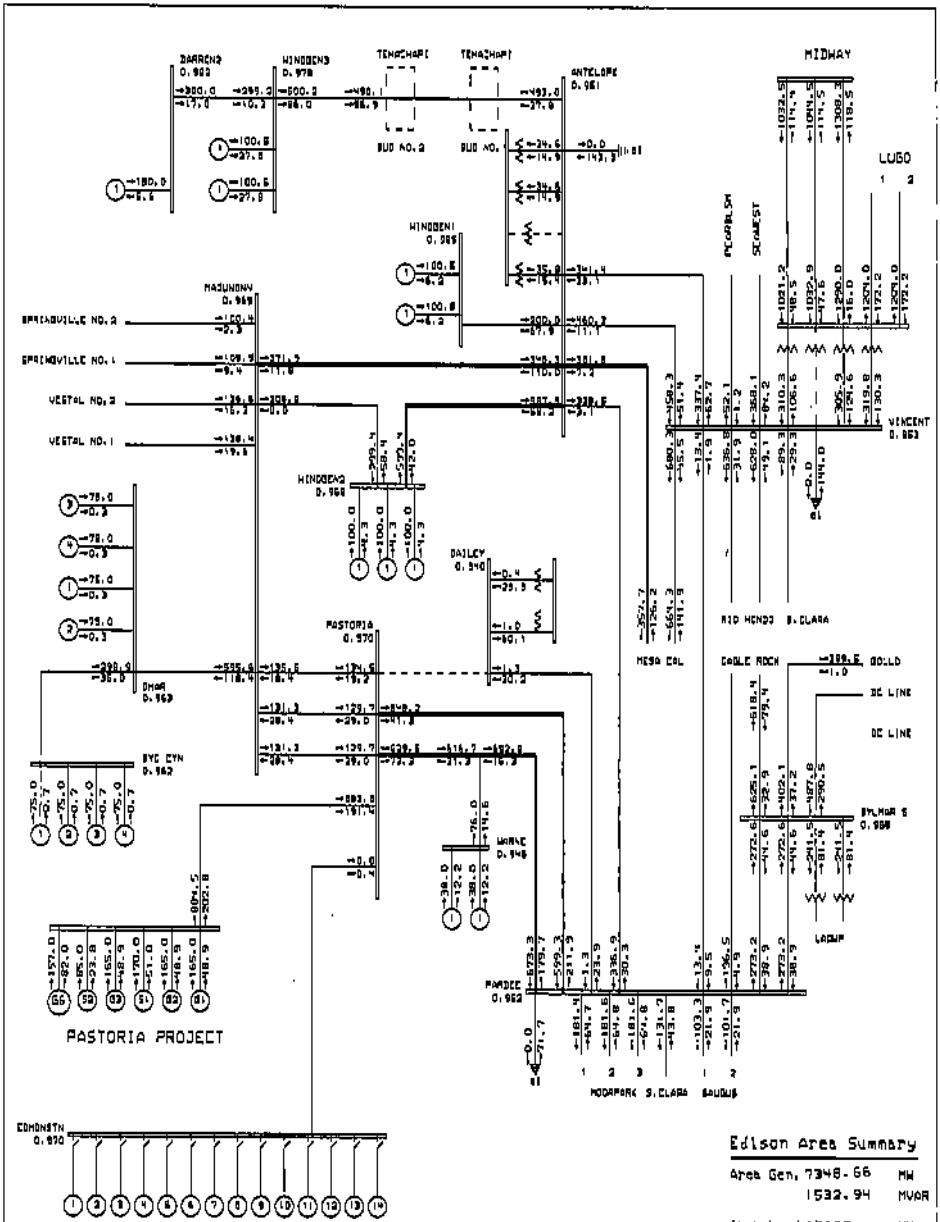

Edison Area Summary

Area Gen. 7348.66 MW
1532.94 MVAR

Area Load 13625.25 MW

BIG CREEK CORRIDOR
230 SYSTEM

General Electric International, Inc. PSLF Program

GENERAL ELECTRIC COMPANY

CALPINE PASTORIA ADDITION SYSTEM IMPACT STUDY
PROPOSED IN SERVICE DATE: JULY 2006
CASE STUDY 1: POST-PROJECT LSP WITHOUT VENTURA GENERATION

N-1: DAILEY-PASTORIA 230 KV

c:\psfi\fi\local\pfile\pf expand
c:\psfi\fi\local\pfile\pf expand
Rating = 1

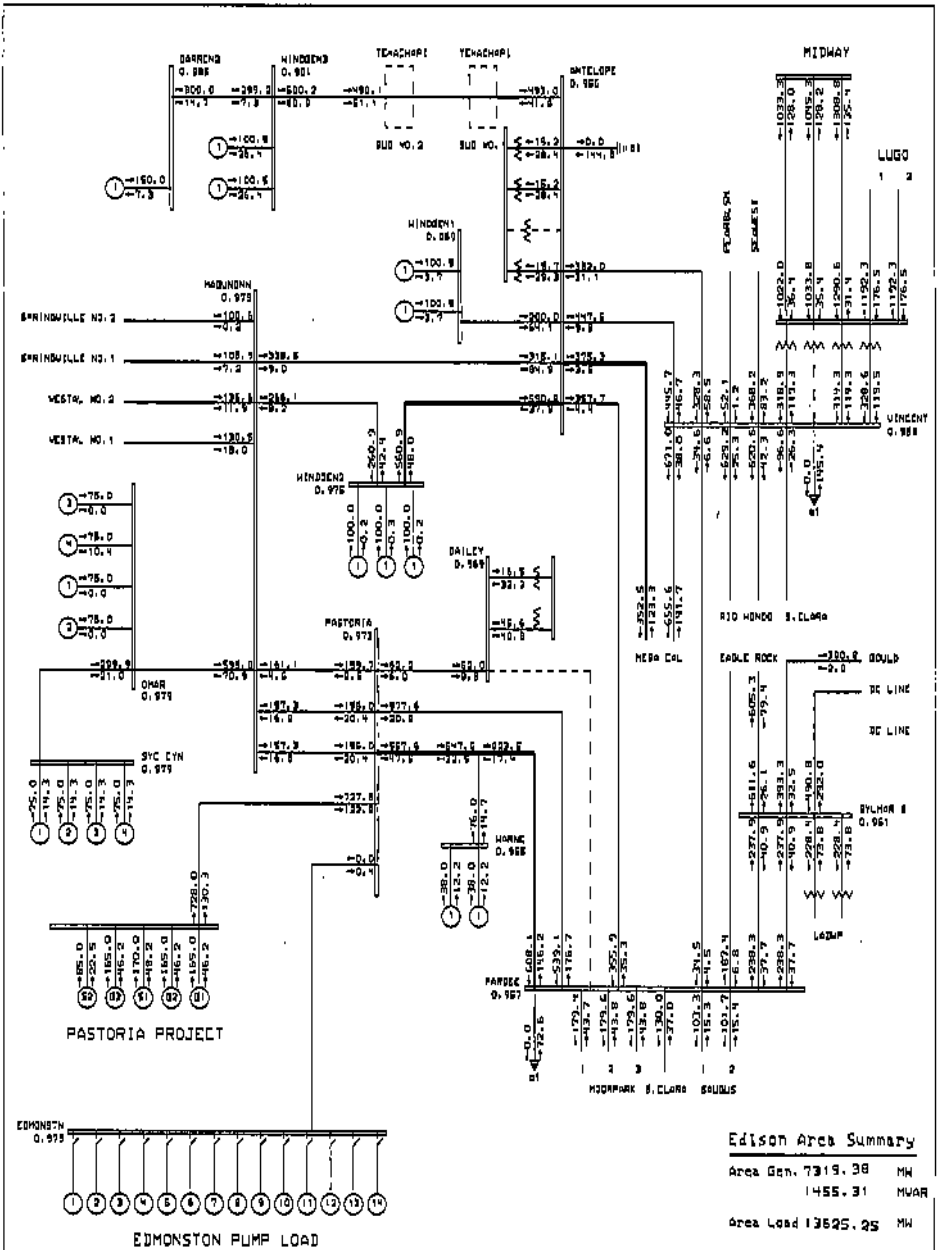
MIDWAY
LUGO
VINCENT
ANTELOPE
TEHACHAPI
BARRENDO
WINDGEN3
WINDGEN1
WINDGEN2
MADUNDNN
SPRINGVILLE NO. 2
SPRINGVILLE NO. 1
VESTAL NO. 2
VESTAL NO. 1
DAILEY
PASTORIA
OMAR
SYC CYN
HORNE
PARDEE
EDMONSTN
BYLMOR 8
EAGLE ROCK
GOULD
DC LINE
DC LINE
RIO HONDO
S.CLARA
MESA COL
MOORPARK
S.CLARA
SAUGUS
PASTORIA PROJECT
EDMONSTON PUMP LOAD
Edison Area Summary
Area Gen. 7319.38 MW
1455.31 MVAR
Area Load 13625.25 MW
BIG CREEK CORRIDOR
230 SYSTEM
General Electric International, Inc. PSLF Program
GENERAL ELECTRIC COMPANY
DALPINE PASTORIA ADDITION- SYSTEM IMPACT STUDY
PROPOSED IN-SERVICE DATE: JULY 2006
CASE STUDY: PRE-PROJECT LSP WITHOUT VENTURA GEN1
H-11 BAILEY-PARDEE 230 KV

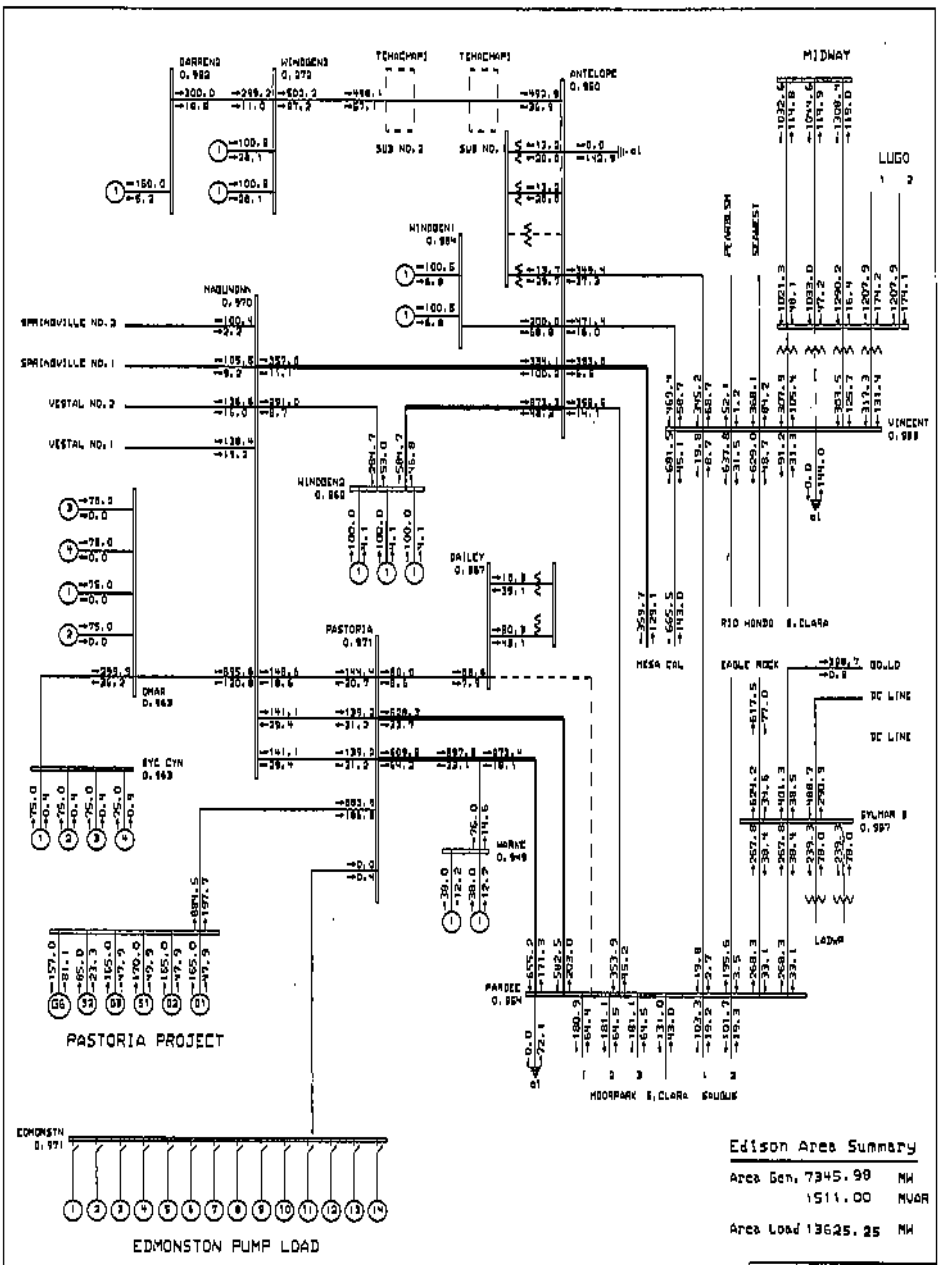

Edison Area Summary

Area Gen. 7345.98 MW
1511.00 MVAR

Area Load 13625.25 MW

BIG CREEK CORRIDOR
230 SYSTEM

General Electric International, Inc. PSLF Program

GENERAL ELECTRIC COMPANY

COLPINE PASTORIA ADDITION- SYSTEM IMPACT STUDY
PROPOSED IN SERVICE DATE: JULY 2006
CASE STUDY 4: POST-PROJECT LSP WITHOUT VENTURA GENERATION

H-12 BAILEY-PARDEE 230 KV

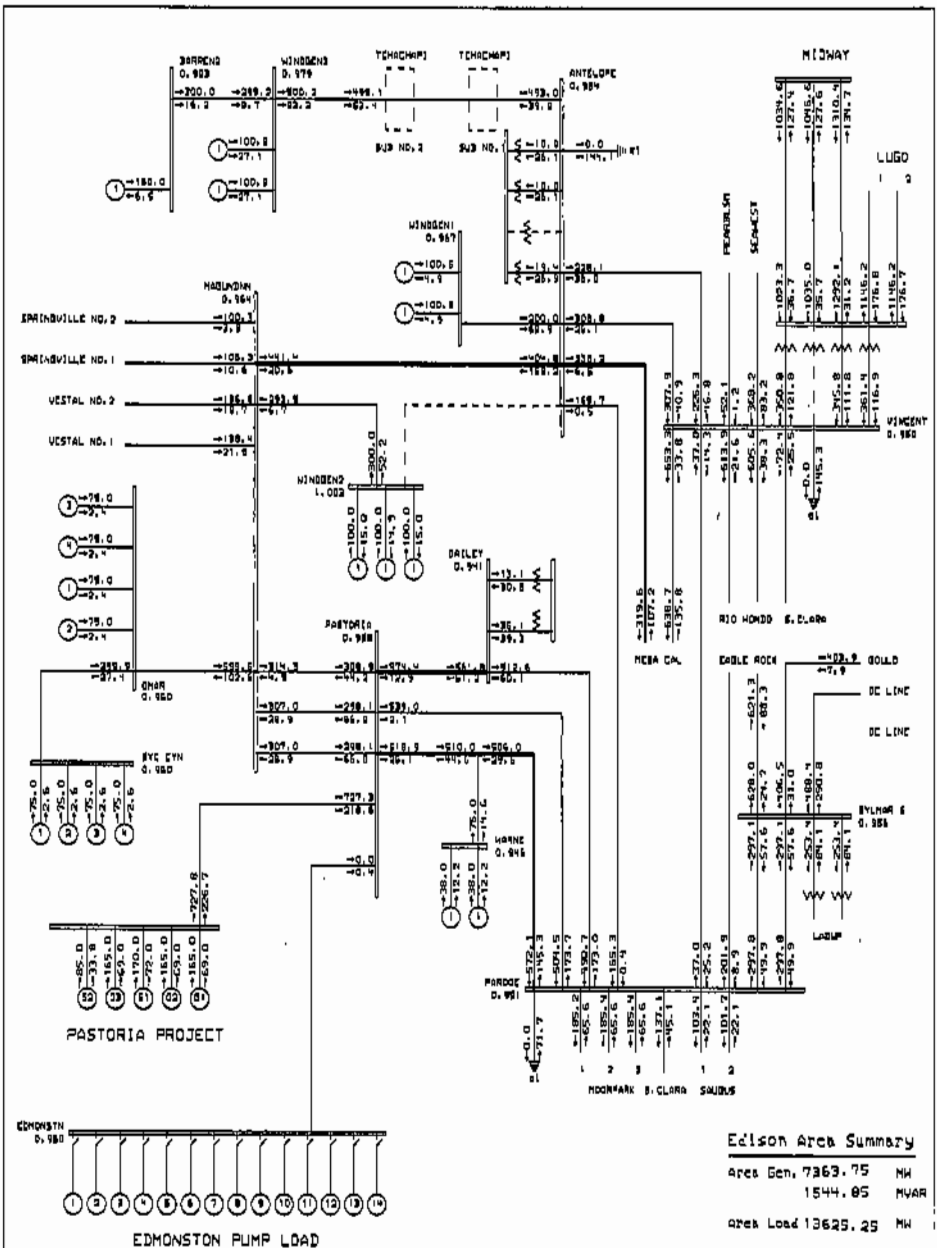
BARREND
0.903
WINDGEN3
0.979
TEHACHAPI
TEHACHAPI
ANTELOPE
0.984
MIDWAY
LUGO
SUB NO. 2
SUB NO. 1
WINDGEN1
0.967
HAGUNDAN
0.964
SPRINGVILLE NO. 2
SPRINGVILLE NO. 1
VESTAL NO. 2
VESTAL NO. 1
PEARSON
SCHAEST
VINCENT
0.950
WINDGEN2
1.002
DAILEY
0.941
PASTORIA
0.988
MESA CAL.
RIO HONDO
S. CLARA
EAGLE ROCK
GOULD
DC LINE
DC LINE
OMAR
0.980
BYE CYN
0.980
HARNE
0.946
EYLMAR 6
0.986
LAGUN
PARDEE
0.951
MOONPARK
S. CLARA
SAUGUS
PASTORIA PROJECT
EDMONSTN
0.980
EDMONSTON PUMP LOAD
Edison Area Summary
Area Gen. 7363.75 MW
1544.85 MVAR
Area Load 13625.25 MW
BIG CREEK CORRIDOR
230 SYSTEM
General Electric International, Inc. PSLF Program
GENERAL ELECTRIC COMPANY
CALPINE PASTORIA ADDITION- SYSTEM IMPACT STUDY
PROPOSED IN-SERVICE DATE: JULY 2006
CASE STUDY 3: PRE-PROJECT LSP WITHOUT VENTURA BCMS
N-1: COTTONWOOD-HAGUNDAH 230 KV

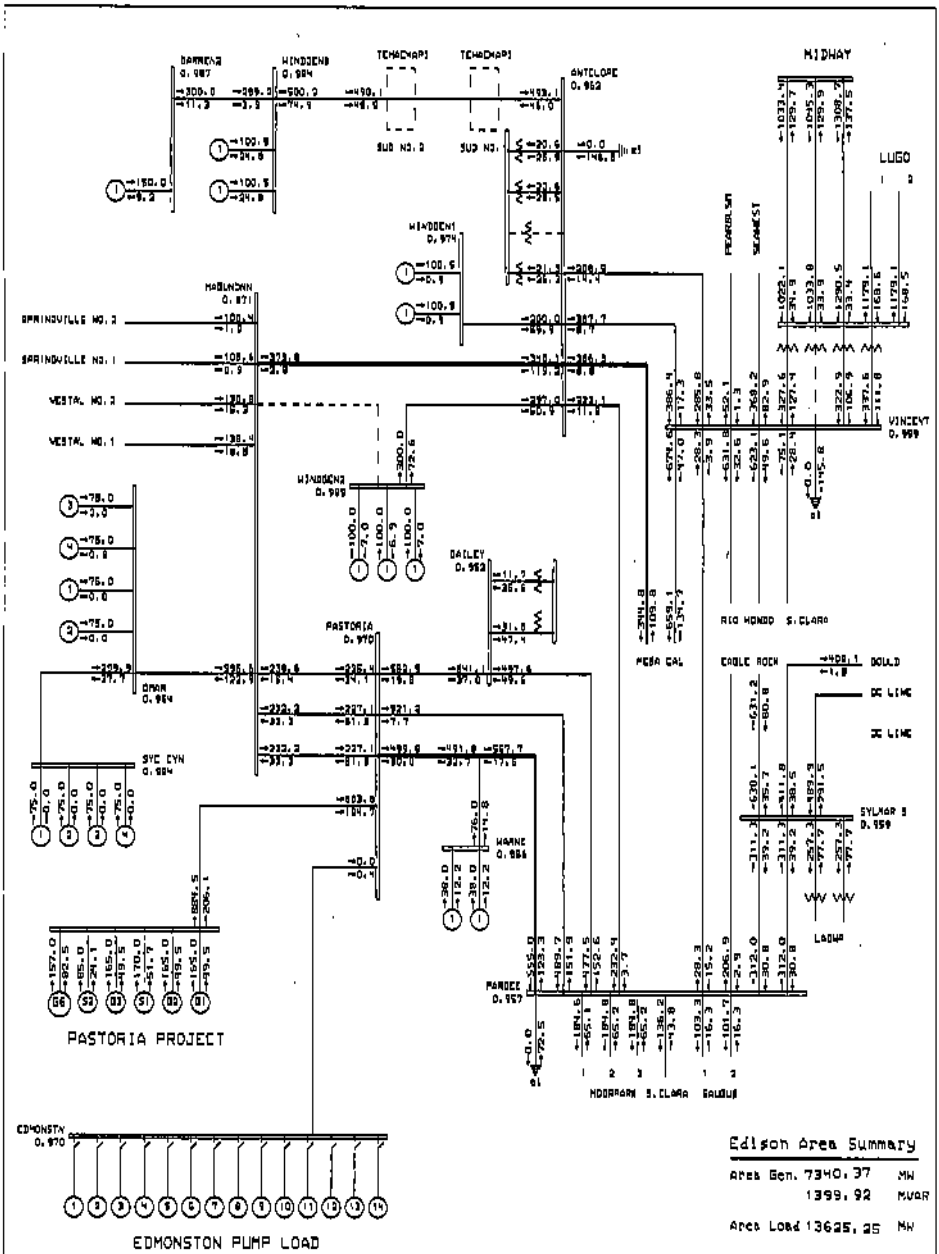

Edison Area Summary

Area Gen. 7340.37 MW
1399.92 MVAR

Area Load 13625.25 MW

BIG CREEK CORRIDOR
230 SYSTEM

General Electric International, Inc. PSLF Program

GENERAL ELECTRIC COMPANY

CALPINE PASTORIA ADDITION- SYSTEM IMPACT STUDY
PROPOSED IN SERVICE DATE: JULY 2006
CASE STUDY 4: POST-PROJECT LSP (WITHOUT VENTURA EXPORTATION)

H-1: COTTONWOOD-MOORPARK 230 KV

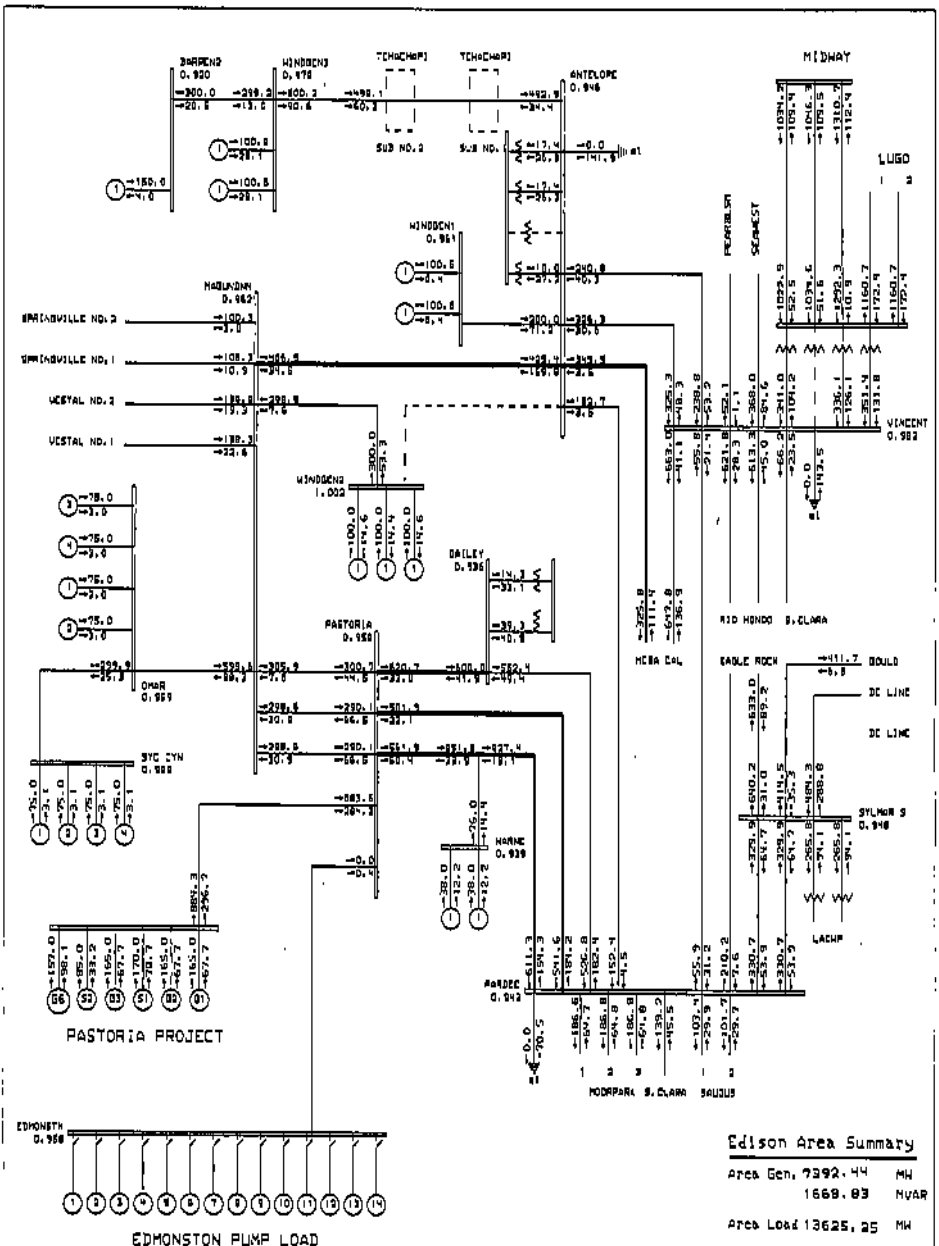
BARRENS 0.920
WINDGEN3 0.976
TEHACHAPI
ANTELOPE 0.946
MIDWAY
LUGO
WINDGEN1 0.951
MADUNNN 0.962
SPRINGVILLE NO. 2
SPRINGVILLE NO. 1
VESTAL NO. 2
VESTAL NO. 1
WINDGEN2 1.002
DAILEY 0.936
PASTORIA 0.958
OMAR 0.959
SYC CYN 0.988
HANNE 0.939
MOORPARK 0.942
VINCENT 0.982
RIO HONDO
S.CLARA
MESA CAL
EAGLE ROCK
GOULD
DC LINE
SYLMAR S 0.948
LACHF
PEARSON
SEGMEST
SUB NO. 2
PASTORIA PROJECT
EDMONSTN 0.958
EDMONSTON PUMP LOAD
Edison Area Summary
Area Gen. 7392.44 MW
1669.83 MVAR
Area Load 13625.25 MW
BIG CREEK CORRIDOR
230 SYSTEM
General Electric International, Inc. PSLF Program
GENERAL ELECTRIC COMPANY
CALPINE PASTORIA ADDITION- SYSTEM IMPACT STUDY
PROPOSED IN SERVICE DATE: JULY 2006
CASE STUDY #: POST-PROJECT LSP (WITHOUT NEVADA GENERATION)
4-11: ANTELOPE-COSTOWIND 230 KV

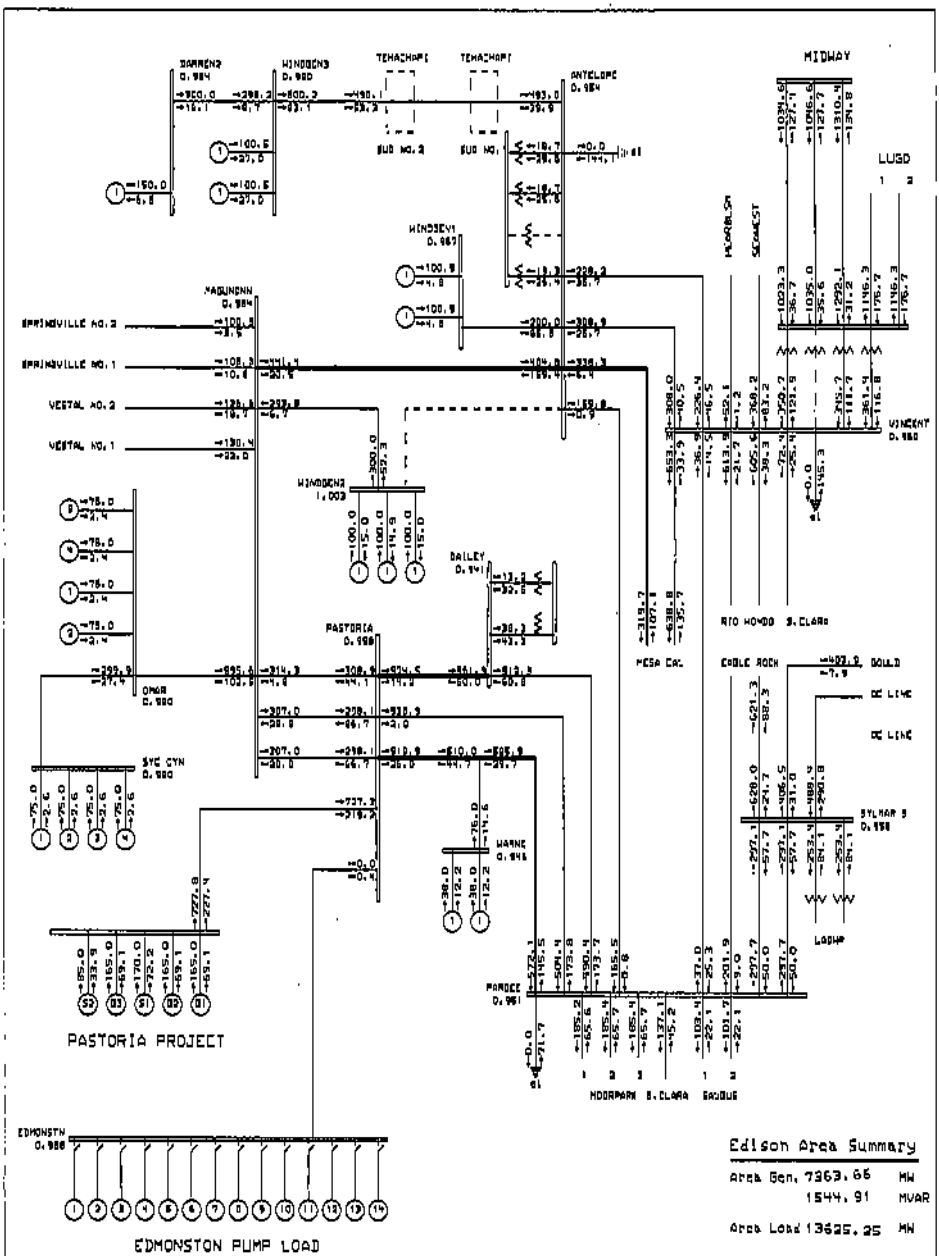
DAMREN2
0.984
WINDGEN3
0.980
TEHACHAPI
TEHACHAPI
ANTELOPE
0.984
SUB NO.2
SUB NO.1
MIDWAY
LUGO
WINDGEN1
0.969
MAGUNDNN
0.984
SPRINGVILLE NO.2
SPRINGVILLE NO.1
VESTAL NO.2
VESTAL NO.1
WINDGEN2
1.003
DALLEY
0.941
PASTORIA
0.998
OMAR
0.980
SYC CYN
0.980
WARNE
0.941
PANOCE
0.961
MOORPARK
S.CLARA
SAUGUS
HOARLSON
SEGANCST
VINCENT
0.980
RIO HONDO
S.CLARA
MESA CAL
EAGLE ROCK
BOULD
DC LINE
DC LINE
SYLMAR 5
0.998
LADWP
PASTORIA PROJECT
EDMONSTN
0.986
EDMONSTON PUMP LOAD
Edison Area Summary
Area Gen. 7363.65 MW
1544.91 MVAR
Area Load 13625.25 MW
BIG CREEK CORRIDOR
230 SYSTEM
MW/MVAR
Wed May 04 15:57:31 2005
General Electric International, Inc. PSLF Program
GENERAL ELECTRIC COMPANY
CALPINE PASTORIA 2003T104 SYSTEM IMPACT STUDY
PROPOSED IN-SERVICE DATE: JULY 2006
CASE STUDY 3: PRE-PROJECT LGP (WITHOUT VENTURA 2CH)
N-1: ANTELOPE-COTTONWOOD 230 KV
c:\ngs\17131\cal\finalgrf expand
c:\ngs\17131\cal\finalgrf expand
Rating = 1

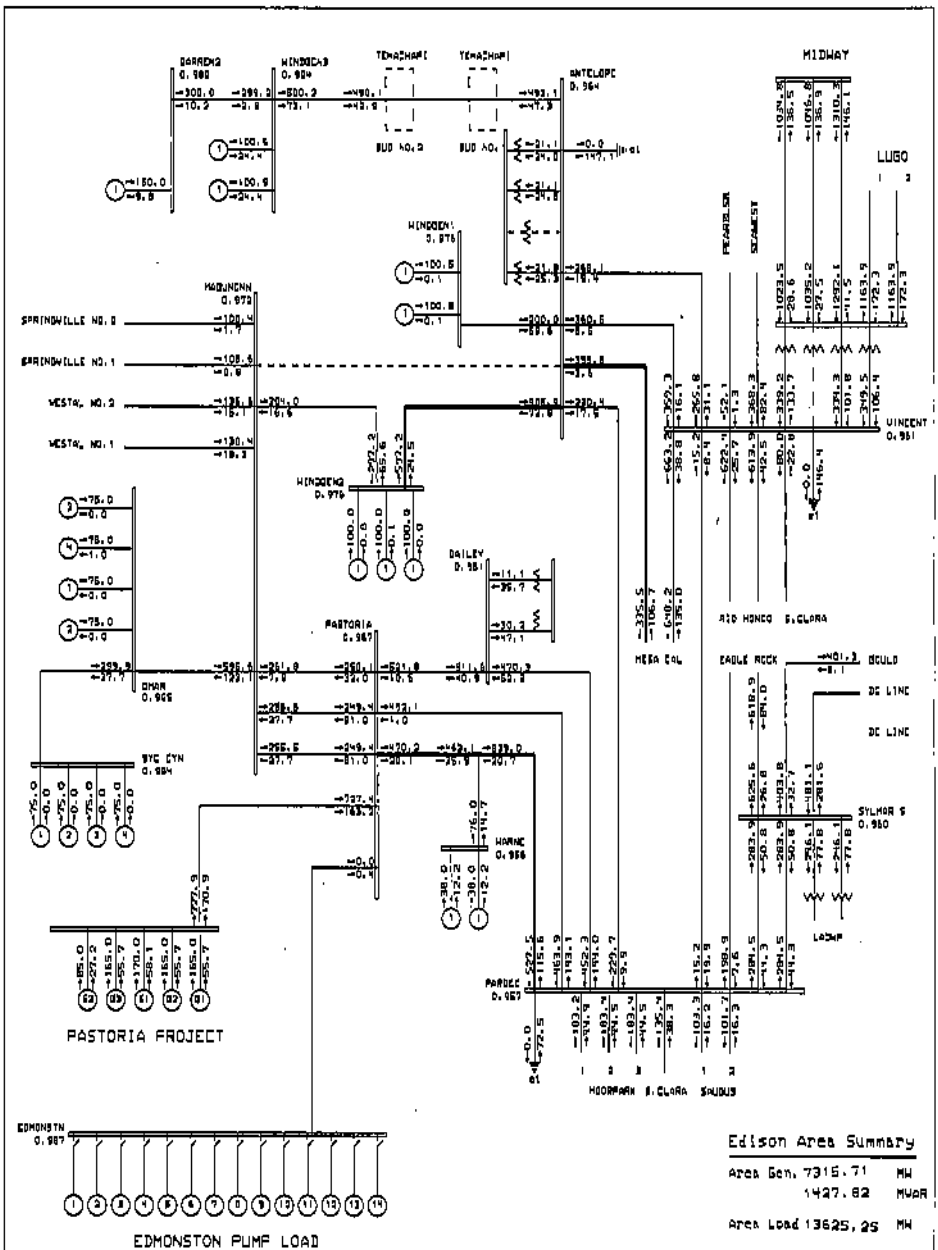
MIDWAY
LUGO
ANTELOPE
TEHACHAPI
WINDCH3
WINDCH4
WINDCH1
WINDCH2
MADUNCHN
SPRINGVILLE NO. 2
SPRINGVILLE NO. 1
WESTAL NO. 2
WESTAL NO. 1
VINCENT
DAILEY
PASTORIA
OMAR
SYC CYN
HAMNE
PARDEE
HOORPARK S.CLARA SAUGUS
MESA COL
EAGLE ROCK
SYLMAR S
EDMONSTN
PASTORIA PROJECT
EDMONSTON PUMP LOAD
Edison Area Summary
Area Gen. 7315.71 MW
1427.82 MVAR
Area Load 13625.25 MW
BIG CREEK CORRIDOR
230 SYSTEM
GENERAL ELECTRIC COMPANY

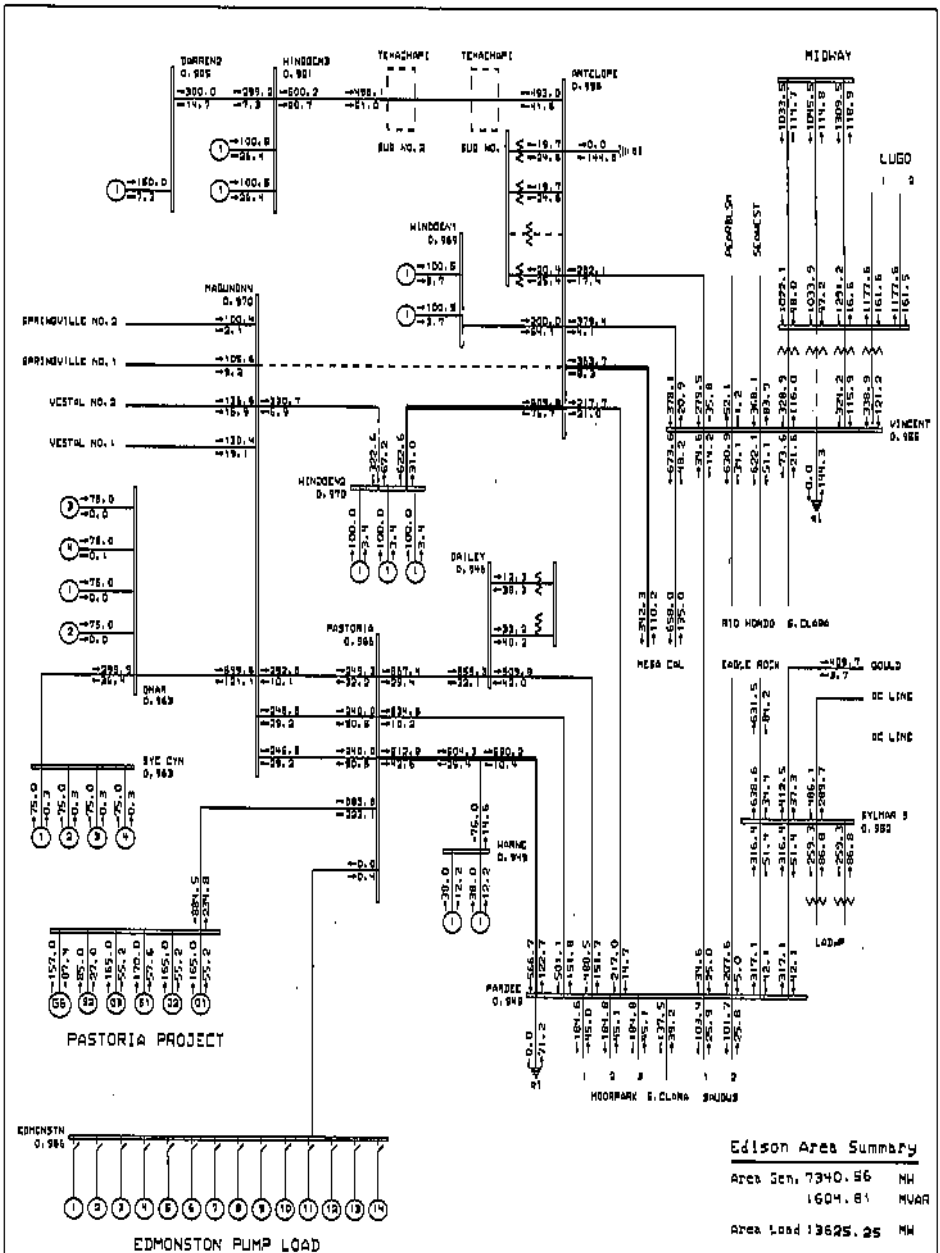
DARREN2
0.985
HINDCEN3
0.981
TEHACHAP1
TEHACHAP2
ANTELOPE
0.995
MIDWAY
LUGO
SUB NO.2
SUB NO.
HINDCEN1
0.969
HAWUNONN
0.970
SPRINGVILLE NO.2
SPRINGVILLE NO.1
VESTAL NO.2
VESTAL NO.1
HINDCEN2
0.979
DAILEY
0.946
PASTORIA
0.965
OMAR
0.963
EVE CYN
0.963
HORNE
0.949
PARDEE
0.949
MOORPARK
EL CLONA
SAUGUS
VINCENT
0.985
RIO HONDO
MESA CAL
EAGLE ROCK
GOULD
DC LINE
DC LINE
SYLMAR 5
0.982
LADWP
PASTORIA PROJECT
EDMONSTN
0.986
EDMONSTON PUMP LOAD
Edison Area Summary
Area Gen. 7340.56 MW
1604.81 MVAR
Area Load 13625.25 MW
BIG CREEK CORRIDOR
230 SYSTEM
Wed May 04 11:29:51 2005
General Electric International, Inc. PSLF Program
GENERAL ELECTRIC COMPANY
CALPINE PASTORIA ADDITION- SYSTEM IMPACT STUDY
PROPOSED IN SERVICE DATE: JULY 2006
CASE STUDY 4: POST-PROJECT LSP WITHOUT VENTURA GENERATION
H-1: ANTELOPE-HAWUNONN 230 KV

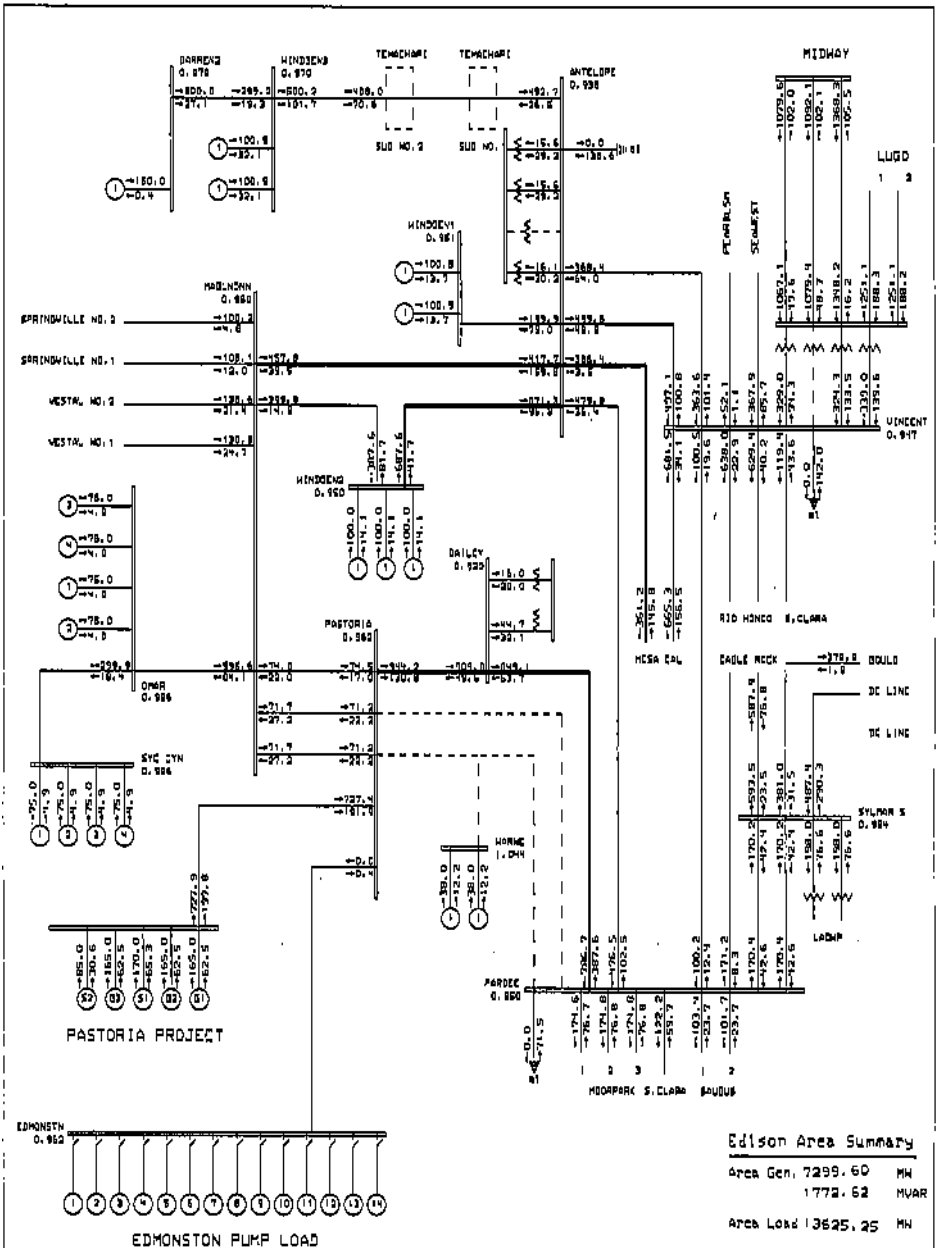

Edison Area Summary

Area Gen. 7299.60 MW
1772.62 MVAR

Area Load 13625.25 MW

BIG CREEK CORRIDOR
230 SYSTEM

General Electric International, Inc. PSLF Program

GENERAL ELECTRIC COMPANY

CALPINE PASTORIA ADDITION- SYSTEM IMPACT STUDY
PROPOSED IN-SERVICE DATE: JULY 2006
CASE STUDY 3: PDC-PROJECT LSP 4W(THROUGH VENTURA GEN)

H-2: PARDEE-PASTORIA 230 KV
PARDEE-PASTORIA-MOORE 230 KV

c:\psfi\fi\cal\fi\ej\ej expand
c:\psfi\fi\cal\fi\ej\ej expand
Rating = 1

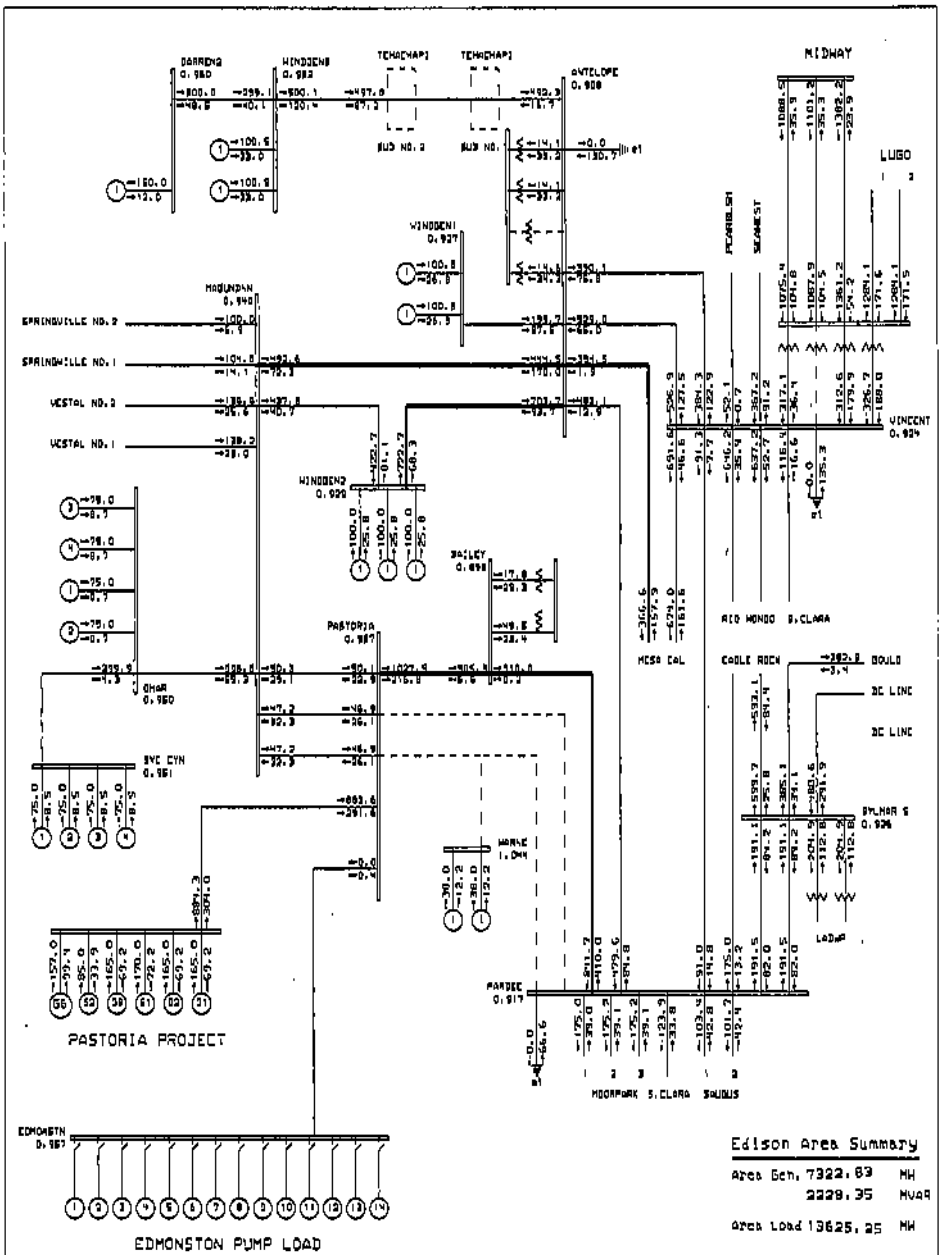
DARRING 0.980
WINDGEN1 0.982
TEHACHAP1
TEHACHAP2
ANTELOPE 0.980
MIDWAY
LUGO
BUS NO. 2
BUS NO. 1
WINDGEN1 0.937
MOUNDAN 0.940
SPRINGVILLE NO. 2
SPRINGVILLE NO. 1
VESTAL NO. 2
VESTAL NO. 1
WINDGEN2 0.929
BAILEY 0.898
PASTORIA 0.987
OMAR 0.960
SVC CYN 0.951
WORLE 1.044
PARDEE 0.917
MOORPARK S.CLARA SOUTHS
PEARBLSH
SEAWEST
VINCENT 0.934
RIO MONDO S.CLARA
MESA CAL
CADLE ROCK
BOULD
DC LINE
DC LINE
DYLNAR S 0.936
LADWP
PASTORIA PROJECT
EDMONSTN 0.987
EDMONSTON PUMP LOAD
Edison Area Summary
Area Gen. 7322.83 MW
2229.35 MVAR
Area Load 13625.25 MW
BIG CREEK CORRIDOR
230 SYSTEM
General Electric International, Inc. PSLF Program
GENERAL ELECTRIC COMPANY
DALPINE PASTORIA ADDITION- SYSTEM IMPACT STUDY
PROPOSED IN SERVICE DATE: JULY 2006
CASE STUDY 4: POST-PROJECT LSP (WITHOUT VENTURA GENERATION)
H-2: PARDEE-PASTORIA 230 KV
PARDEE-PASTORIA-WORLE 230 KV

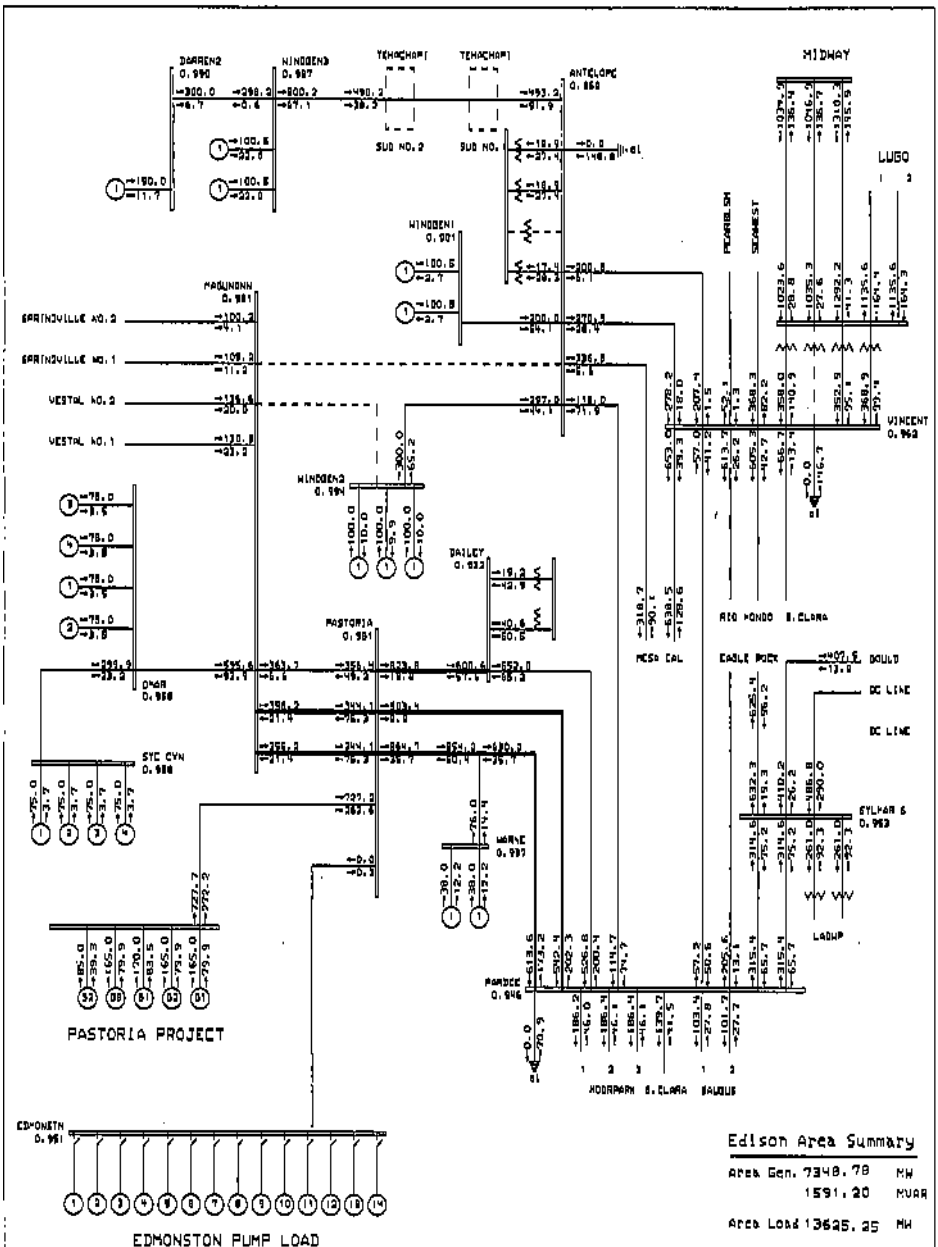

Edison Area Summary

Area Gen. 7348.78 MW
1591.20 MVAR

Area Load 13625.25 MW

BIG CREEK CORRIDOR
230 SYSTEM
MAPMAP Wed May 04 10:11:15 2005

General Electric International, Inc. PSLF Program

GENERAL ELECTRIC COMPANY

CALPINE PASTORIA ADDITION: SYSTEM IMPACT STUDY
PROPOSED IN-SERVICE DATE: JULY 2006
CASE STUDY 3: PRE-PROJECT LSP WITHOUT VENTURA GEAR

4-21 DAILEY-PARDEE 230 KV
PARDEE-PASTORIA-WARNE 230 KV

c:\psfi\13\cal\pastor expand
c:\psfi\13\cal\pastor expand
Rating = 1

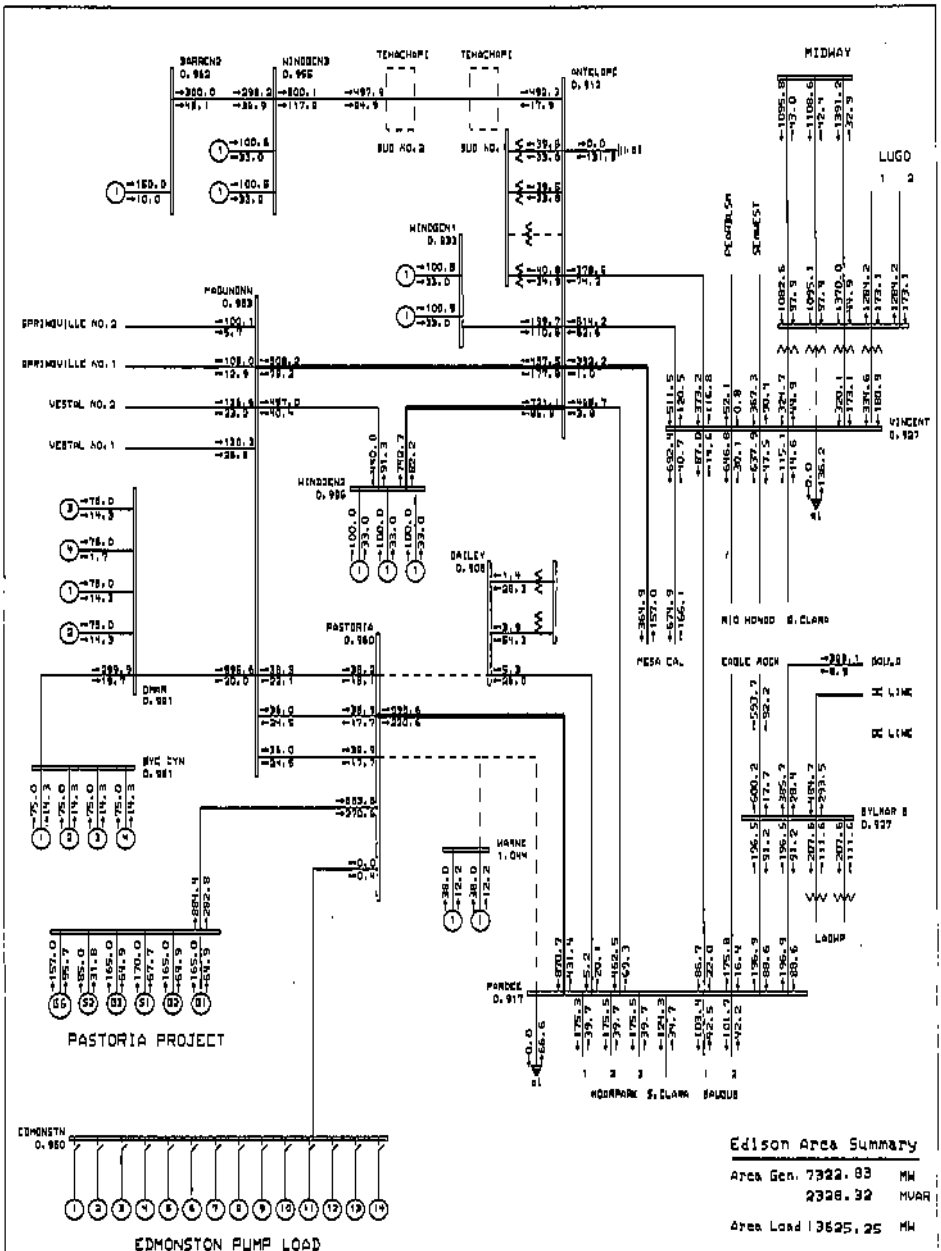

Edison Area Summary

Area Gen. 7322.83 MW
2328.32 MVAR

Area Load 13625.25 MW

BIG CREEK CORRIDOR

230 SYSTEM

MUNWAR Wed May 04 11:35:42 2005

General Electric International, Inc. PSLF Program

GENERAL ELECTRIC COMPANY

CALPINE PASTORIA ADDITION- SYSTEM IMPACT STUDY
PROPOSED IN SERVICE DATE: JULY 2006
CASE STUDY 4: POST-PROJECT LSP (WITHOUT NEWTURN GENERATION)

N-2: DAILEY-PASTORIA 230 KV
PANDEE-PASTORIA-HARNE 230 KV

c:\ups\f13\fcal\ptrk\pf.xpwd
c:\ups\f13\fcal\ptrk\pf.xpwd
Rel Pg 1

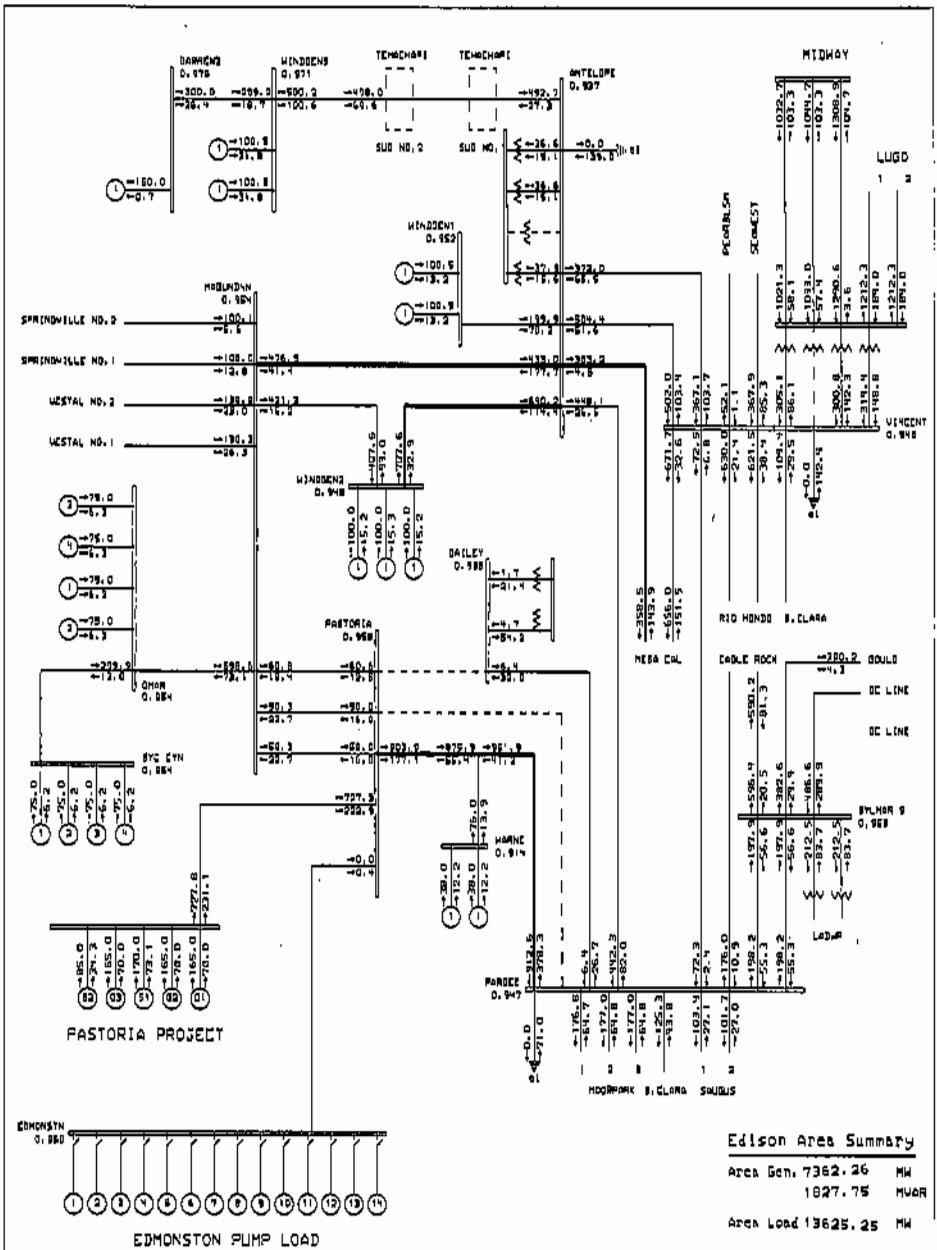
DARRENW
WINDDENS
TEHACHAPI
ANTELOPE
MIDWAY
LUGO
SUB NO. 2
SUB NO. 1
WINDDENW
MOUNDVW
SPRINDVILLE NO. 2
SPRINDVILLE NO. 1
WESTAL NO. 2
WESTAL NO. 1
VINCENT
RIO HONDO
S. CLARA
MESA CAL
CADLE ROCK
GOULD
DC LINE
DC LINE
BYLHAR 9
LADWP
DAILEY
PASTORIA
OMAR
SYC CYN
HAMNE
PARDEE
MOORPARK
S. CLARA
SAUGUS
PASTORIA PROJECT
EDMONSTN
EDMONSTON PUMP LOAD
Edison Area Summary
Area Gen. 7362.26 MW
1827.75 MVAR
Area Load 13625.25 MW
BIG CREEK CORRIDOR
230 SYSTEM
General Electric International, Inc. PSLF Program
GENERAL ELECTRIC COMPANY
CALPINE PASTORIA ADDITION- SYSTEM IMPACT STUDY
PROPOSED IN-SERVICE DATE: JULY 2006
CASE STUDY 3: PRE-PROJECT 1SP (WITHOUT VENTURA GEN)
N-2: DAILEY-PASTORIA 230 KV
PARDEE-PASTORIA 230 KV

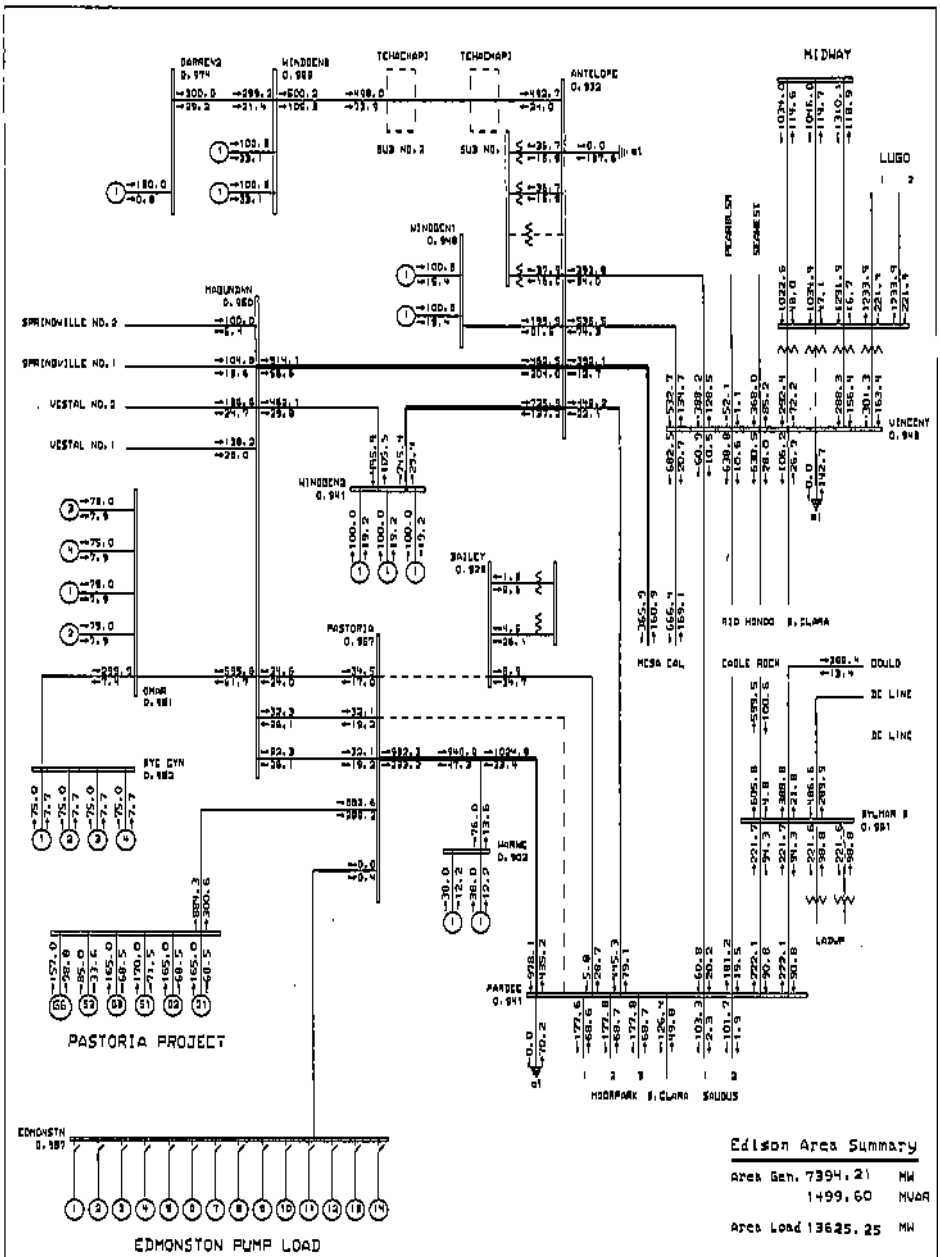

Edison Area Summary

Area Gen. 7394.21 MW
1499.60 MVAR

Area Load 13625.25 MW

BIG CREEK CORRIDOR

230 SYSTEM

General Electric International, Inc. PSLF Program

GENERAL ELECTRIC COMPANY

CALPINE PASTORIA ADDITION- SYSTEM IMPACT STUDY
PROPOSED IN SERVICE DATE: JULY 2006
CASE STUDY #: POST-PROJECT LSP (WITHOUT VENTURA GENERATION)

H-2: BAILEY-PASTORIA 230 kV
PARDEE-PASTORIA 230 kV

c:\wpsl\13\calpinelyef expand
c:\wpsl\13\calpinelyef expand
Rating # 1

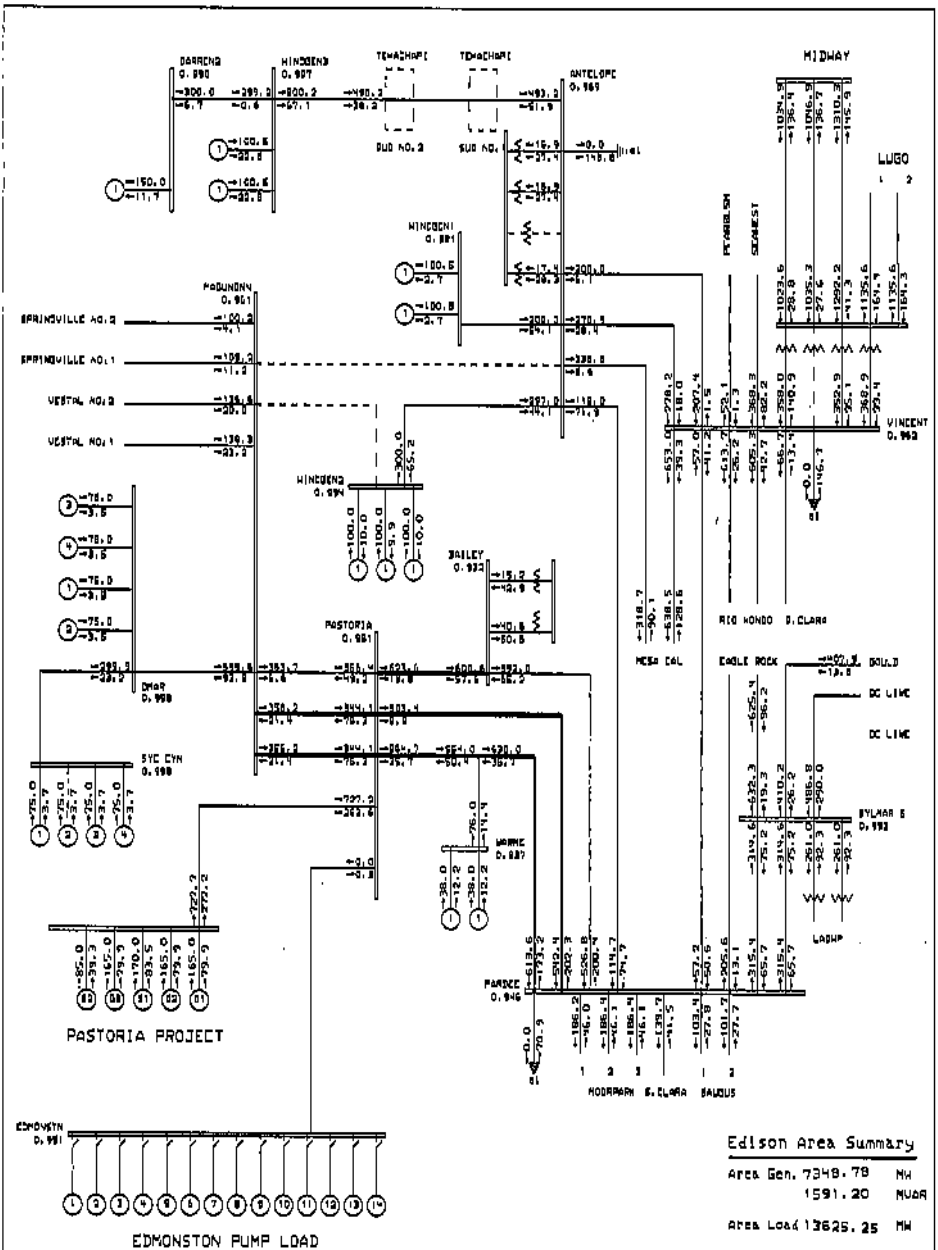

General Electric International, Inc. PSLF Program

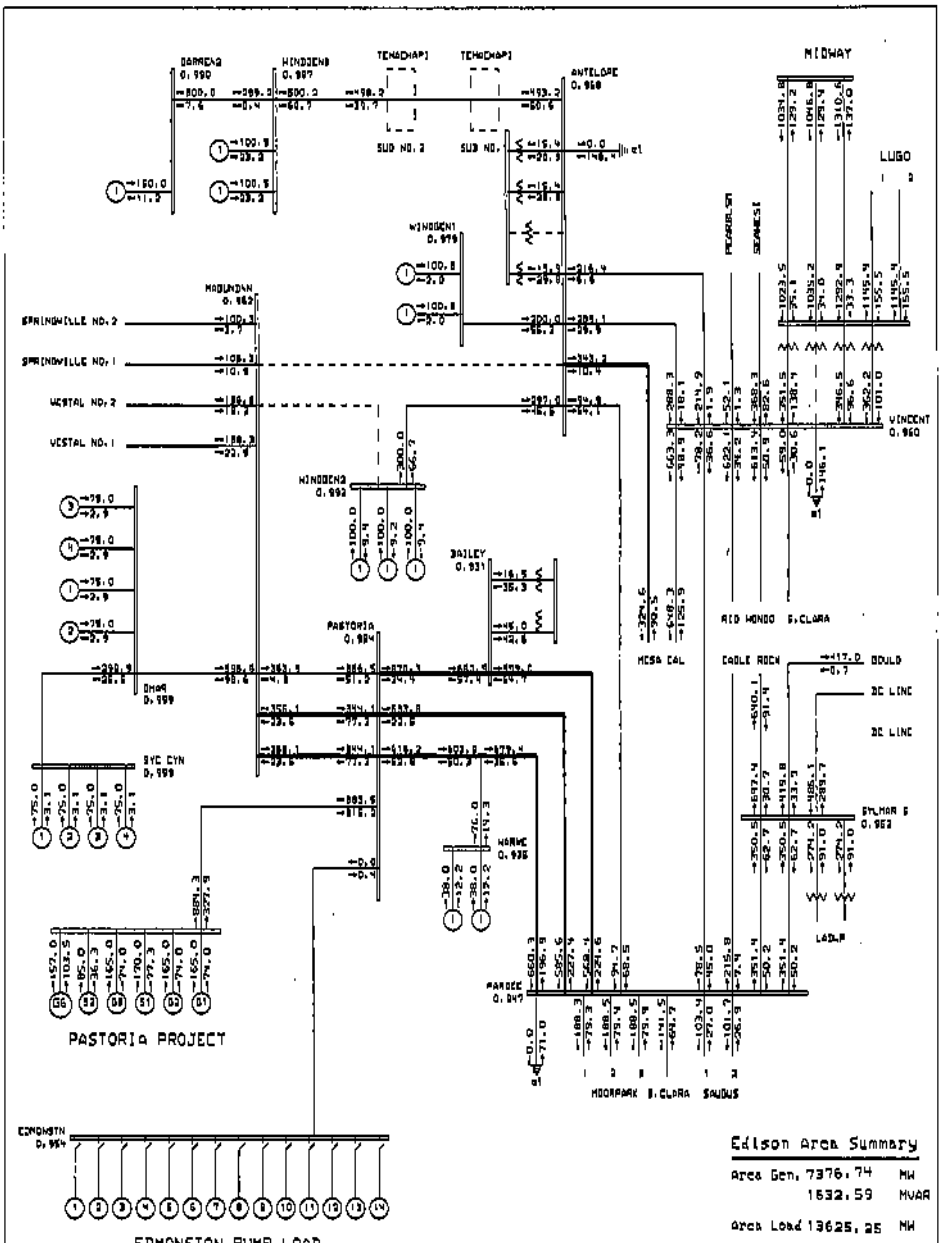
DARWIN2
0.990
WINDDEN3
0.987
TEHACHAP1
TEHACHAP1
ANTELOPE
0.960
MIDWAY
SUD NO. 2
SUD NO.
LUGO
WINDDEN1
0.979
MOUNDAN
0.962
SPRINGVILLE NO. 2
SPRINGVILLE NO. 1
VESTAL NO. 2
VESTAL NO. 1
VINCENT
0.960
WINDDEN2
0.992
DAILEY
0.931
PASTORIA
0.984
RED MONDO S.CLARA
MESA CAL
EAGLE ROCK
GOULD
DC LINE
DC LINE
DHAR
0.999
SYC CYN
0.999
STLMAR S
0.982
LADWP
NORWE
0.935
PARDEE
0.947
MOORPARK S.CLARA SAUGUS
PASTORIA PROJECT
EDMONSTN
0.954
EDMONSTON PUMP LOAD
Edison Area Summary
Area Gen. 7376.74 MW
1632.59 MVAR
Area Load 13625.25 MW
BIG CREEK CORRIDOR
230 SYSTEM
General Electric International, Inc. PSLF Program
GENERAL ELECTRIC COMPANY
CALPINE PASTORIA ADDITION- SYSTEM IMPACT STUDY
PROPOSED IN SERVICE DATE: JULY 2006
CASE STUDY 4: POST-PROJECT LSP (WITHOUT VENTURA GENERATION)
N-2: ANTELOPE-MOUNDAIN NO. 1 230 KV
CONTINGWIND-MOUNDAIN 230 KV

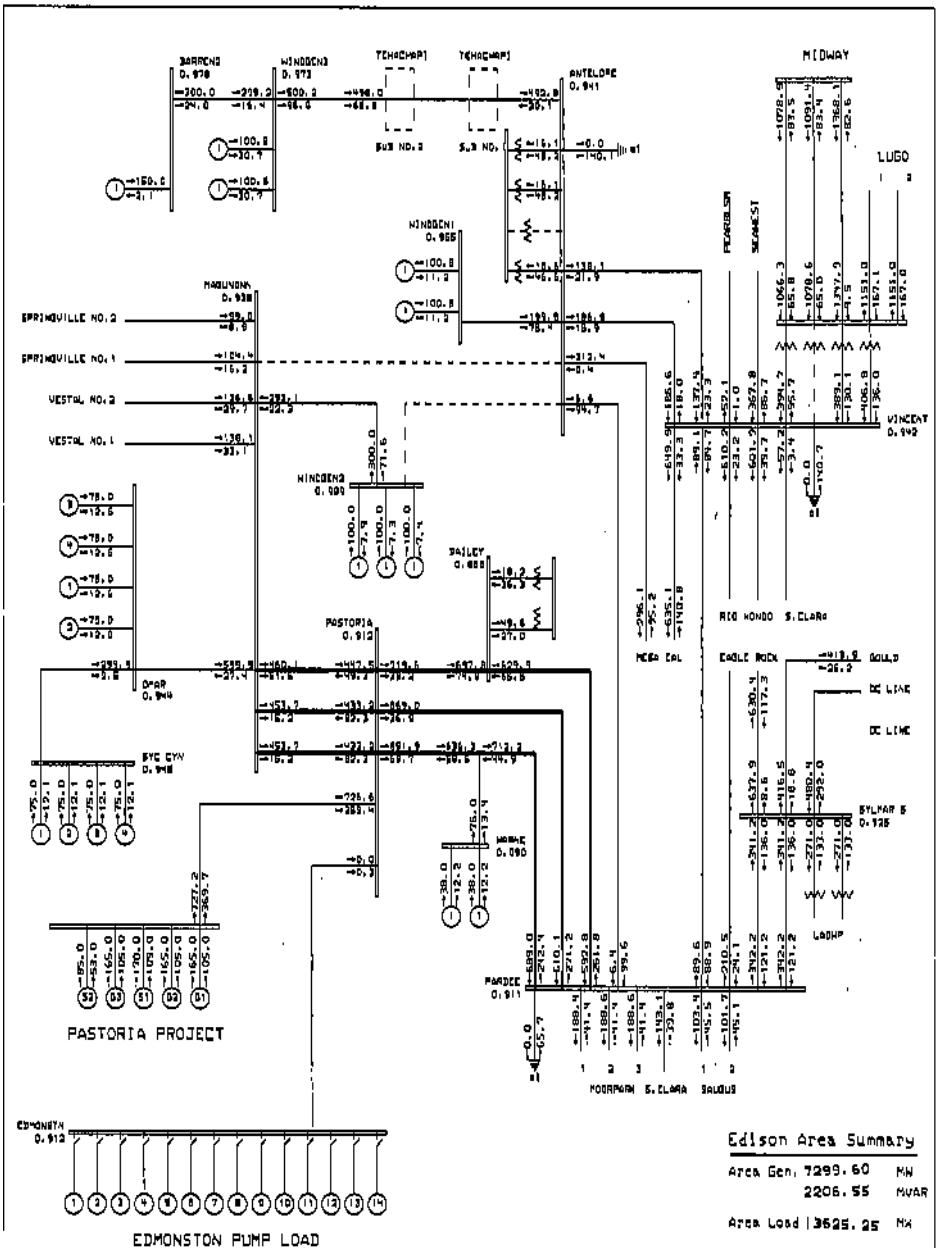
BARRENS
WINDDEN3
TEHACHAP1
TEHACHAP1
ANTELOPE
MIDWAY
LUGO
WINDDEN1
MAGUNDNA
SPRINGVILLE NO.2
SPRINGVILLE NO.1
VESTAL NO.2
VESTAL NO.1
WINDDEN2
BAILEY
PASTORIA
DPAR
SYC GYN
PASTORIA PROJECT
PEARDLSN
SEAWEST
VINCENT
RIO HONDO
S.CLARA
MESA CAL
EAGLE ROCK
GOULD
DC LINE
DC LINE
SYLMAR 5
LADWP
MOORPARK
S.CLARA
SALGUS
PARDEE
EDMONSTN
EDMONSTON PUMP LOAD
Edison Area Summary
Area Gen. 7299.60 MW
2206.55 MVAR
Area Load 3625.25 MW
BIG CREEK CORRIDOR
230 SYSTEM
General Electric International, Inc. PSLF Program
GENERAL ELECTRIC COMPANY
CALPINE PASTORIA ADDITION- SYSTEM IMPACT STUDY
PROPOSED IN-SERVICE DATE: JULY 2006
CASE STUDY 3: PRE-PROJECT LSP WITHOUT VENTURA GEN
N-2: ANTELOPE-COTTONWOOD 230 KV
ANTELOPE-MAGUNDEN NO.1 230 KV

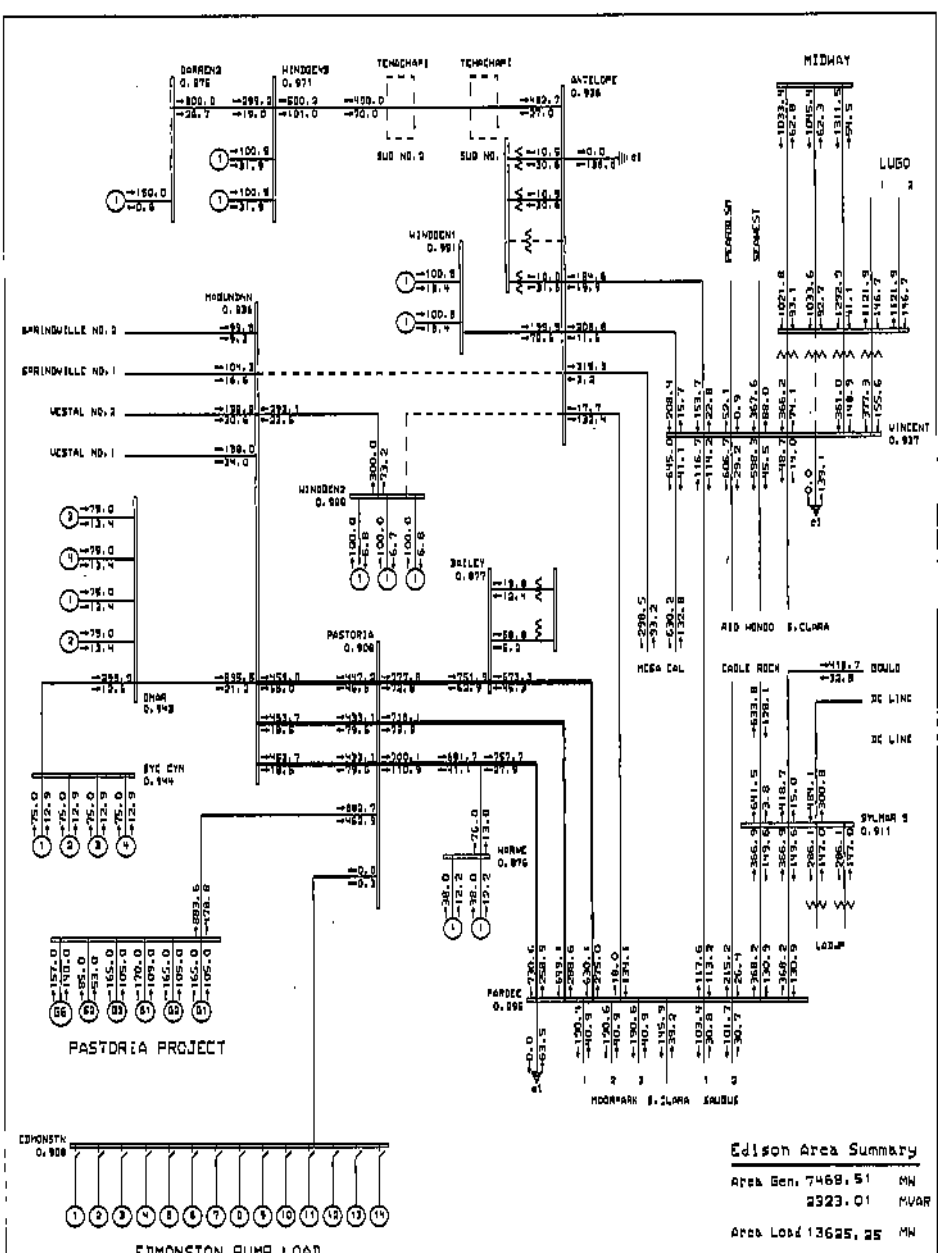

Edison Area Summary

Area Gen. 7469.51 MW
2323.01 MVAR

Area Load 13625.25 MW

BIG CREEK CORRIDOR

230 SYSTEM

NGWMAX Wed May 04 11:57:18 2005

General Electric International, Inc. PSLF Program

GENERAL ELECTRIC COMPANY

DALFINE PASTORIA ADDITION- SYSTEM IMPACT STUDY
PROPOSED IN SERVICE DATE: JULY 2006
CASE STUDY 4: POST-PROJECT LSP (WITHOUT VONTURA GENERATION)

N-2: ANTELOPE-COTTONWOOD 230 KV
ANTELOPE-MOUNDAIN NO. 1 230 KV

c:\psd\7137\cd\pinchpt expand
c:\psd\7137\cd\pinchpt expand
Rating = 1

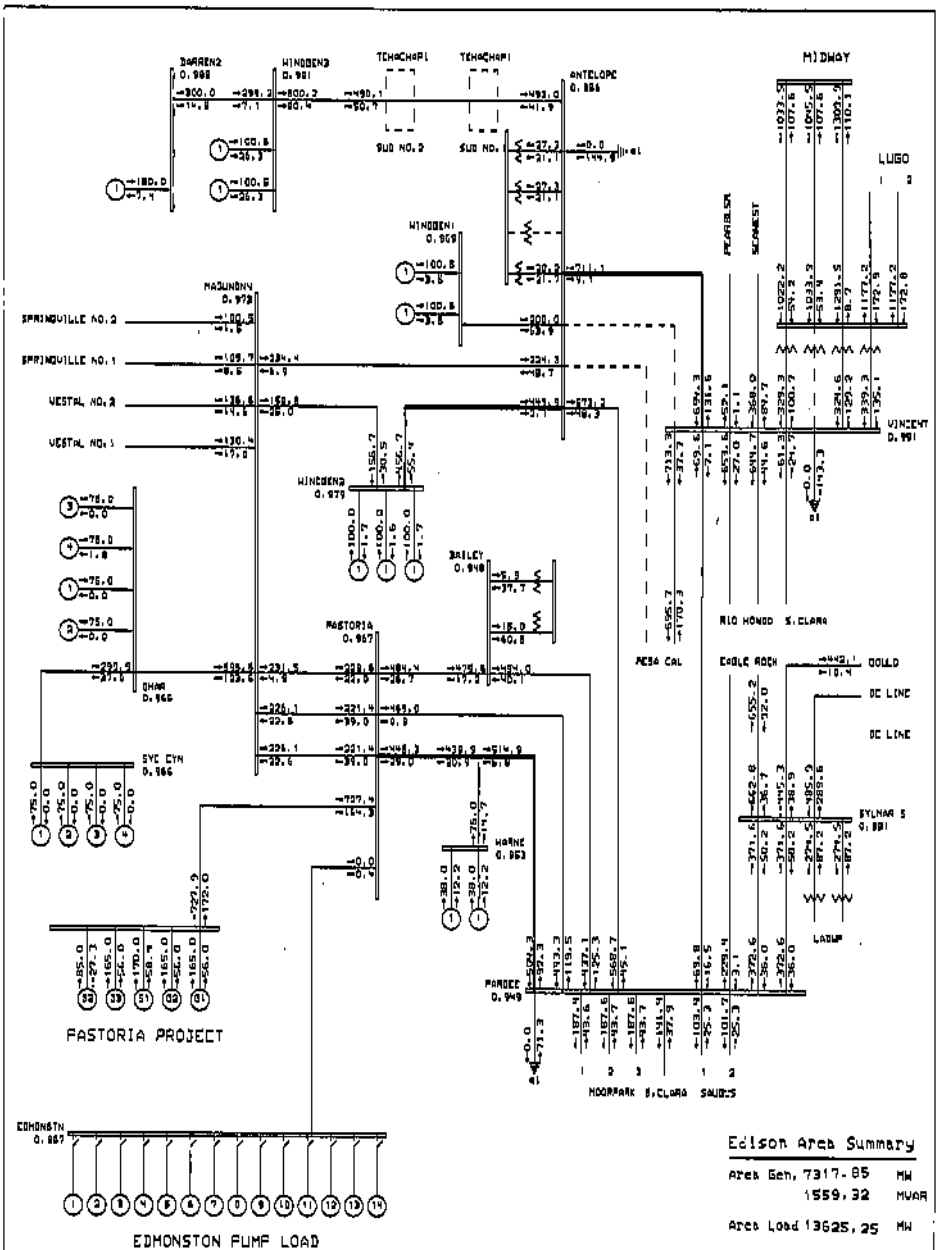

Edison Area Summary

Area Gen, 7317.85 MW
1559.32 MVAR

Area Load 13625.25 MW

BIG CREEK CORRIDOR
230 SYSTEM

General Electric International, Inc. PSLF Program

GENERAL ELECTRIC COMPANY

CALPINE PASTORIA ADDITION- SYSTEM IMPACT STUDY
PROPOSED IN-SERVICE DATE: JULY 2006
CASE STUDY 2: PAC+PROJECT LSP (WITHOUT SYLMAR GEN)

N-2: ANTELOPE-VINCENT 230 KV
MESA-ANTELOPE 230 KV

c:\wpsf\13\calpine\pc\ expand
c:\wpsf\13\calpine\pc\ expand
Rating: 1

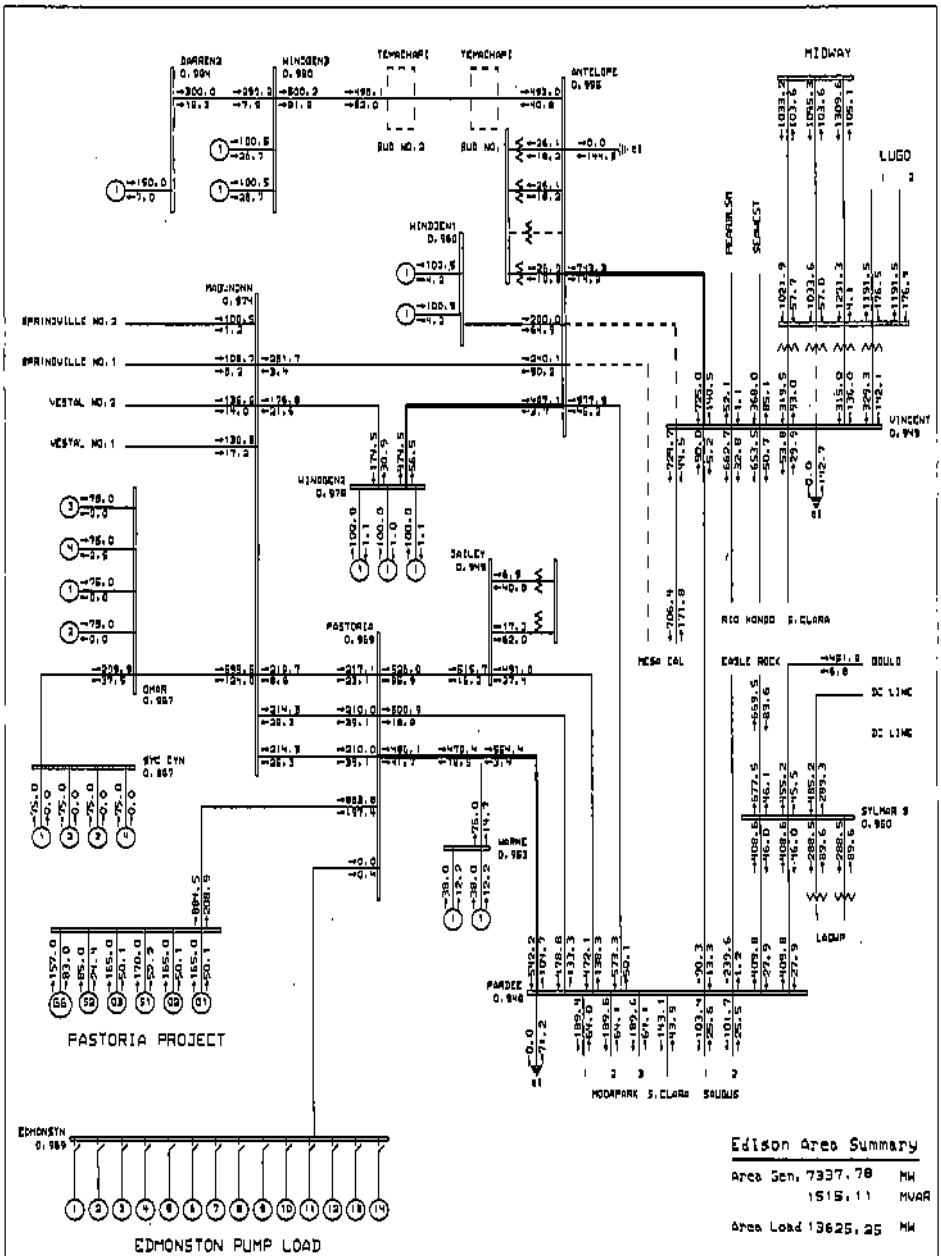

Edison Area Summary

Area Gen. 7337.78 MW
1515.11 MVAR

Area Load 13625.25 MW

BIG CREEK CORRIDOR
230 SYSTEM

General Electric International, Inc. PSLF Program

GENERAL ELECTRIC COMPANY

CALPINE PASTORIA ADDITION- SYSTEM IMPACT STUDY
PROPOSED IN SERVICE DATE: JULY 2005
CASE STUDY 4: POST-PROJECT LSP (WITHOUT VENTURA GENERATION)

H-22 NEW ANTELOPE-VINCENT 230 KV
ANTELOPE-MESA 230 KV

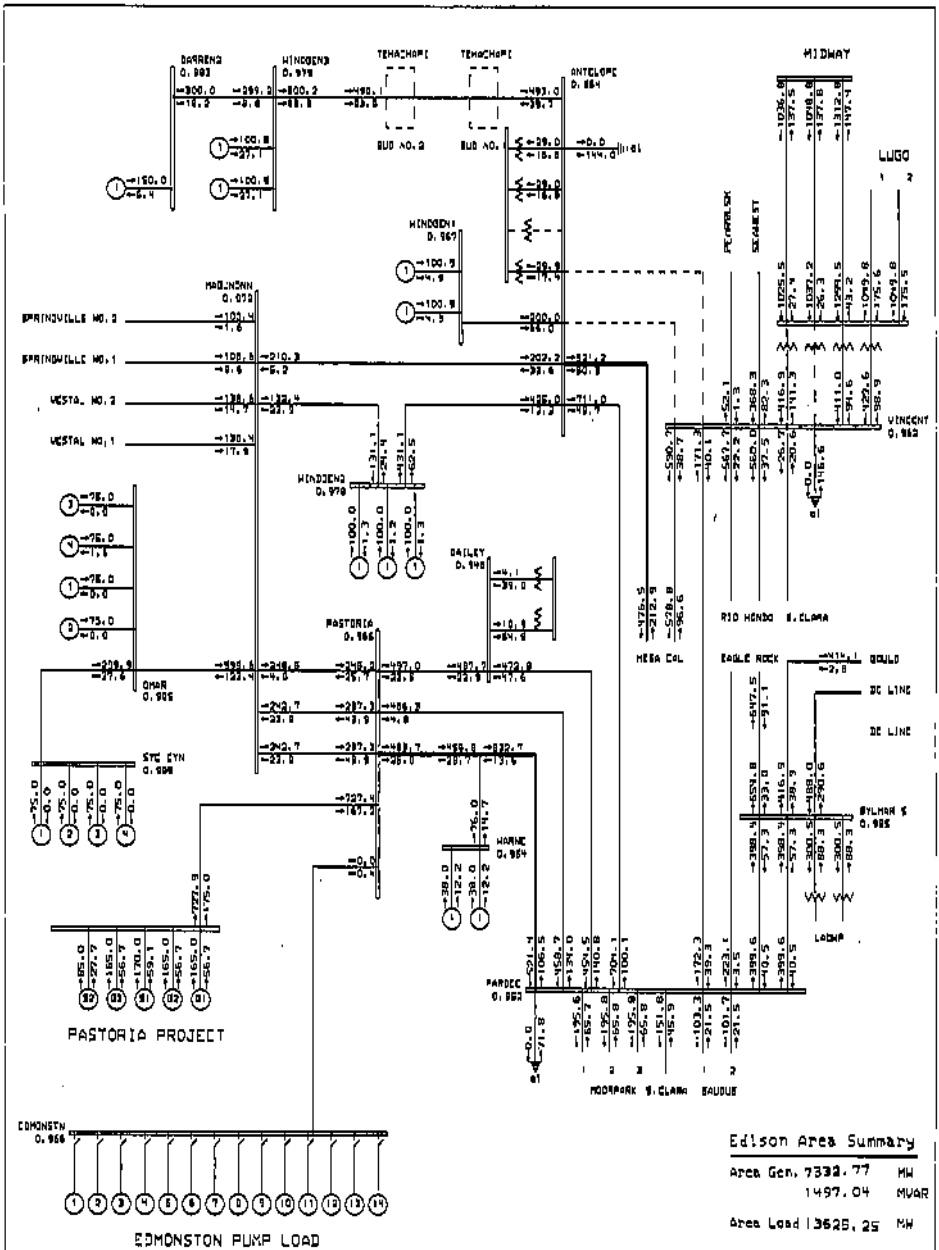
BARRENS 0.983
WINDGENS 0.979
TEHACHAPI
TEHACHAPI
ANTELOPE 0.984
BUS NO. 2
BUS NO. 1
MIDWAY
LUGO
PEARBLOSSOM
SEAMIST
WINDGEN1 0.967
MADIGENN 0.972
SPRINGVILLE NO. 2
SPRINGVILLE NO. 1
VESTAL NO. 2
VESTAL NO. 1
VINCENT 0.962
WINDGEN2 0.970
BAILEY 0.948
PASTORIA 0.966
OMAR 0.985
STC CYN 0.998
MESA CAL
RIO HONDO
S.CLARA
EAGLE ROCK
GOULD
DC LINE
DC LINE
SYLMAR S 0.985
LADWP
WARNE 0.954
PARDEE 0.952
MOORPARK
S.CLARA
SAUGUS
PASTORIA PROJECT
EDMONSTON 0.966
EDMONSTON PUMP LOAD
Edison Area Summary
Area Gen. 7332.77 MW
1497.04 MVAR
Area Load 13625.25 MW
BIG CREEK CORRIDOR
230 SYSTEM
GENERAL ELECTRIC COMPANY
EXPANDE PASTORIA ADDITION: SYSTEM IMPACT STUDY
PROPOSED IN-SERVICE DATE: JULY 2006
CASE STUDY 3: PRE-PROJECT LSP CONTINUOUS MONITORING GEN1
H-22 EXISTING ANTELOPE-VINCENT 230 KV
NEW ANTELOPE-VINCENT 230 KV

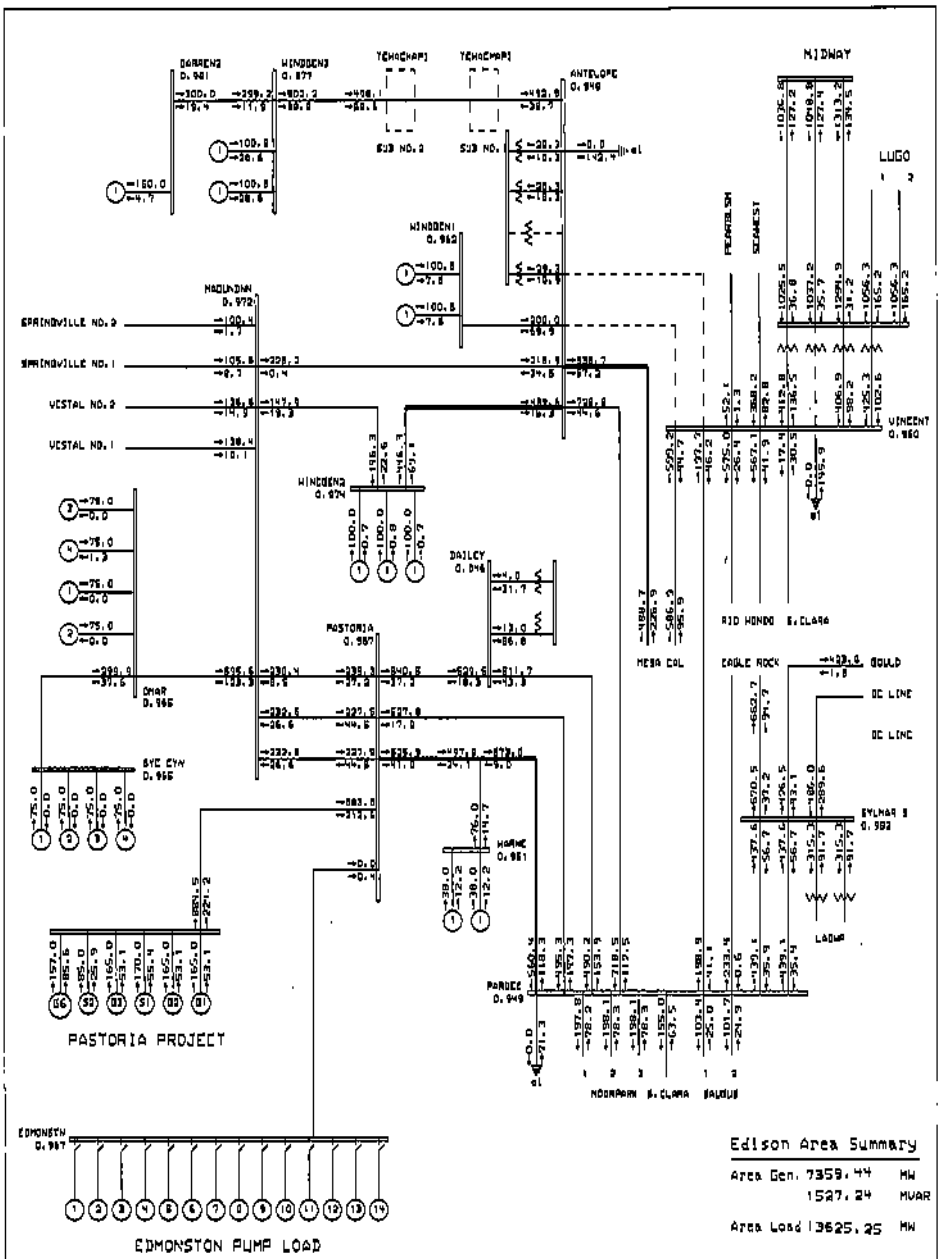

Edison Area Summary

Area Gen. 7359.44 MW
1527.24 MVAR

Area Load 13625.25 MW

BIG CREEK CORRIDOR
230 SYSTEM

General Electric International, Inc. PSLF Program

GENERAL ELECTRIC COMPANY

CALPINE PASTORIA ADDITION: SYSTEM IMPACT STUDY
PROPOSED IN SERVICE DATE: JULY 2006
CASE STUDY #1 POST-PROJECT LSP (WITHOUT VENTURA GENERATION)

IN-21 EXISTING ANTELOPE-VINCENT 230 KV
NEW ANTELOPE-VINCENT 230 KV

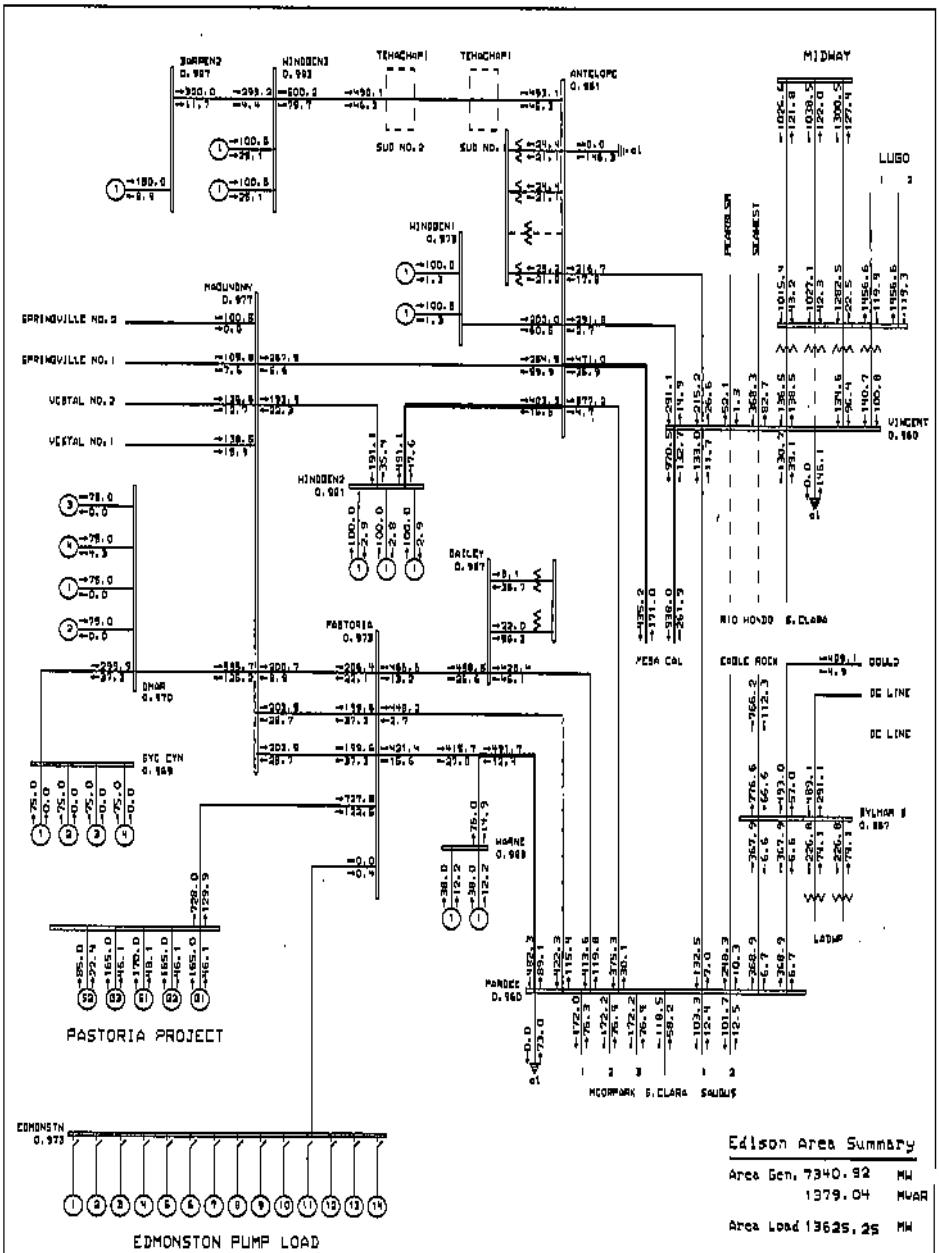
BARREN2
0.927
WINDDEN3
0.993
TEHACHAPI
TEHACHAPI
ANTELOPE
0.951
MIDWAY
LUGO
SUB NO. 2
SUB NO. 1
WINDDEN1
0.979
MAGUNDAY
0.977
SPRINGVILLE NO. 2
SPRINGVILLE NO. 1
VESTAL NO. 2
VESTAL NO. 1
WINDDEN2
0.981
BAILEY
0.987
PASTORIA
0.979
DNAR
0.970
SYC CYN
0.969
HOANE
0.989
MARDEE
0.960
VINCENT
0.960
RIO HONDO
S.CLARA
MESA CAL
EAGLE ROCK
GOULD
DC LINE
DC LINE
SYLMAR 8
0.987
LADWP
MCCORMARK
S.CLARA
SAUGUS
PASTORIA PROJECT
EDMONSTN
0.973
EDMONSTON PUMP LOAD
Edison Area Summary
Area Gen. 7340.92 MW
1379.04 MVAR
Area Load 13625.25 MW
BIG CREEK CORRIDOR
230 SYSTEM
General Electric International, Inc. PSLF Program
GENERAL ELECTRIC COMPANY
CALPINE PASTORIA ADDITION- SYSTEM IMPACT STUDY
PROPOSED IN-SERVICE DATE: JULY 2006
CASE STUDY 1: PRE-PROJECT LSP WITHOUT MENTONE GEN
H-21 RIO HONDO-VINCENT NO.1 230 KV
RIO HONDO-VINCENT NO.2 230 KV
Rating = 1

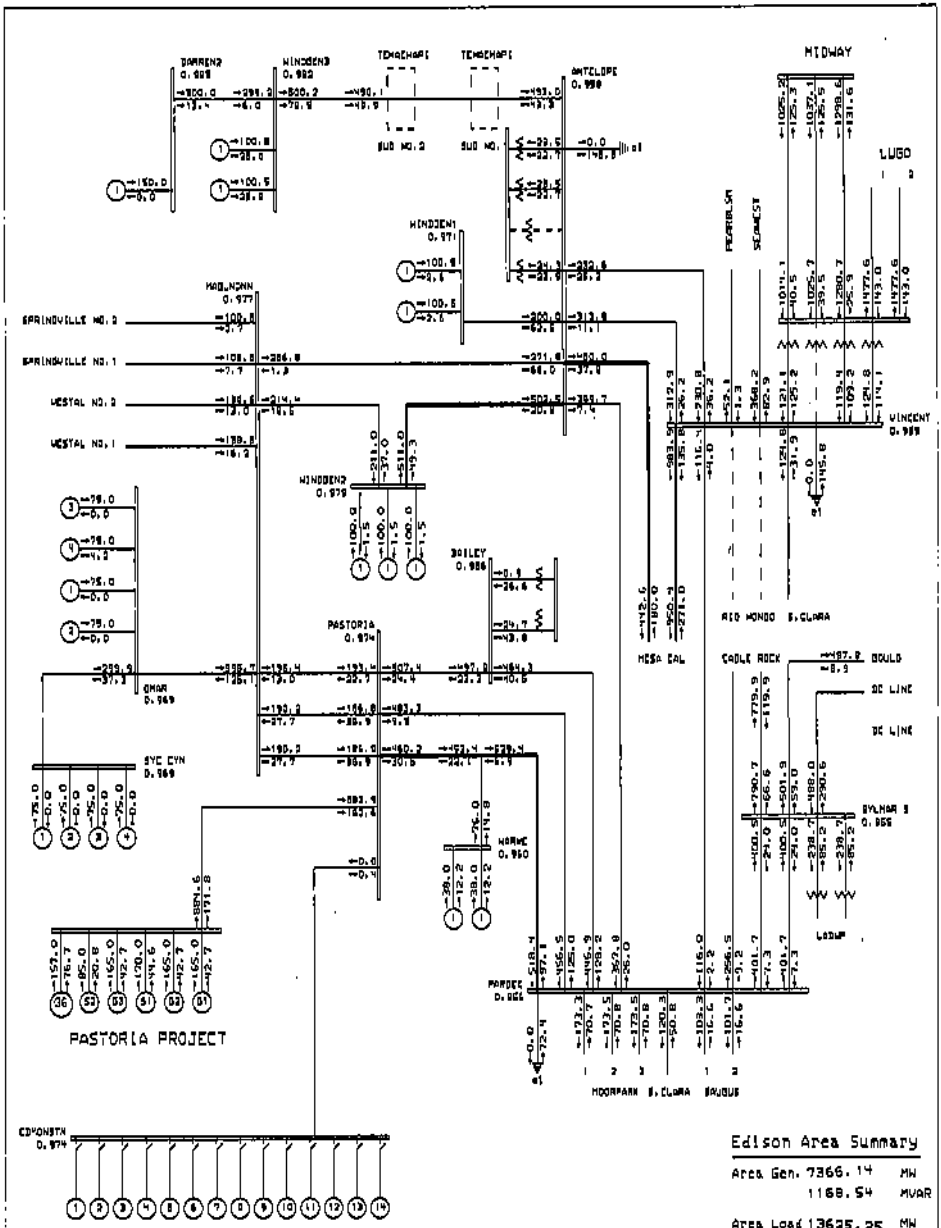
MIDWAY
LUGO
VINCENT
RED MOND S.CLARA
MESA CAL
CADLE ROCK
GOULD
DC LINE
DC LINE
SYLMAR S
LADWP
MOORPARK S.CLARA
BAUGUS
PARDEE
MORME
BOILEY
PASTORIA
OMAR
SYC CYN
MAD.MONN
WINDDEN2
WINDDEN1
ANTELOPE
SUB NO.2
SUB NO.1
TEHACHAPI
TEHACHAPI
DARRENS
ERINDVILLE NO.2
ERINDVILLE NO.1
VESTAL NO.2
VESTAL NO.1
PASTORIA PROJECT
EDMONSTON PUMP LOAD
Edison Area Summary
Area Gen. 7366.14 MW
1168.54 MVAR
Area Load 13625.25 MW
BIG CREEK CORRIDOR
230 SYSTEM
GENERAL ELECTRIC COMPANY
CALPINE PASTORIA ADDITION: SYSTEM IMPACT STUDY
PROPOSED IN SERVICE DATE: JULY 2006
CASE STUDY 1: POST-PROJECT LSP (WITHOUT VENTURA GENERATION)
SI-21 RED MOND-VINCENT NO. 1 230 KV
RED MOND-VINCENT NO. 2 230 KV

APPENDIX C

LIGHT SPRING
POWER FLOW PLOTS

WITH VENTURA
AREA GENERATION

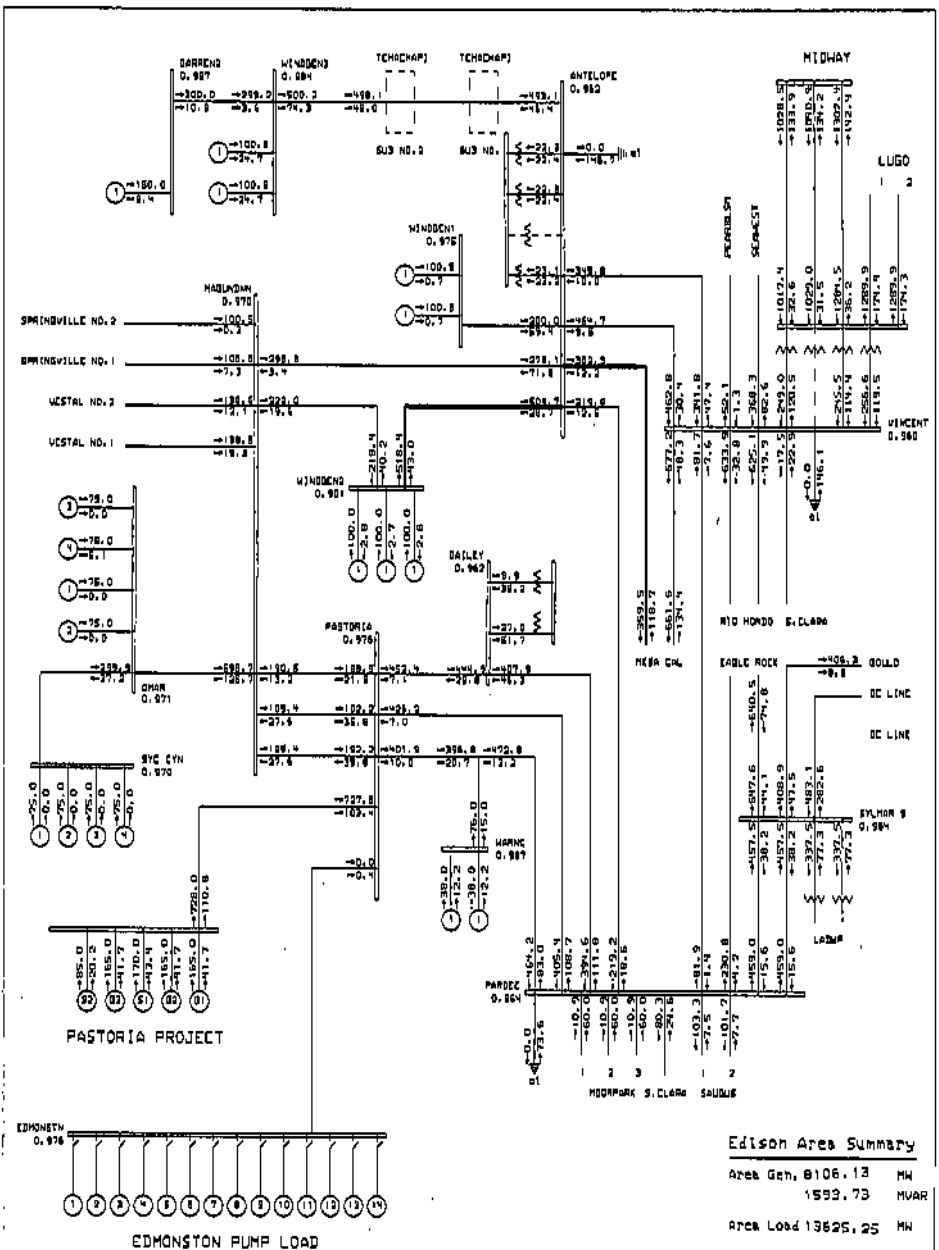

Edison Area Summary

Area Gen. 8106.13 MW
1553.73 MVAR

Area Load 13625.25 MW

BIG CREEK CORRIDOR
230 SYSTEM

General Electric International, Inc. PSL/ Program

GENERAL ELECTRIC COMPANY

CALPINE PASTORIA ADDITION-SYSTEM IMPACT STUDY
PROPOSED IN-SERVICE DATE: JULY 2006
CASE STUDY S1 PRE-PROJECT LSP (WITH WINDUB GENERATION)

N-G2 BASE CASE

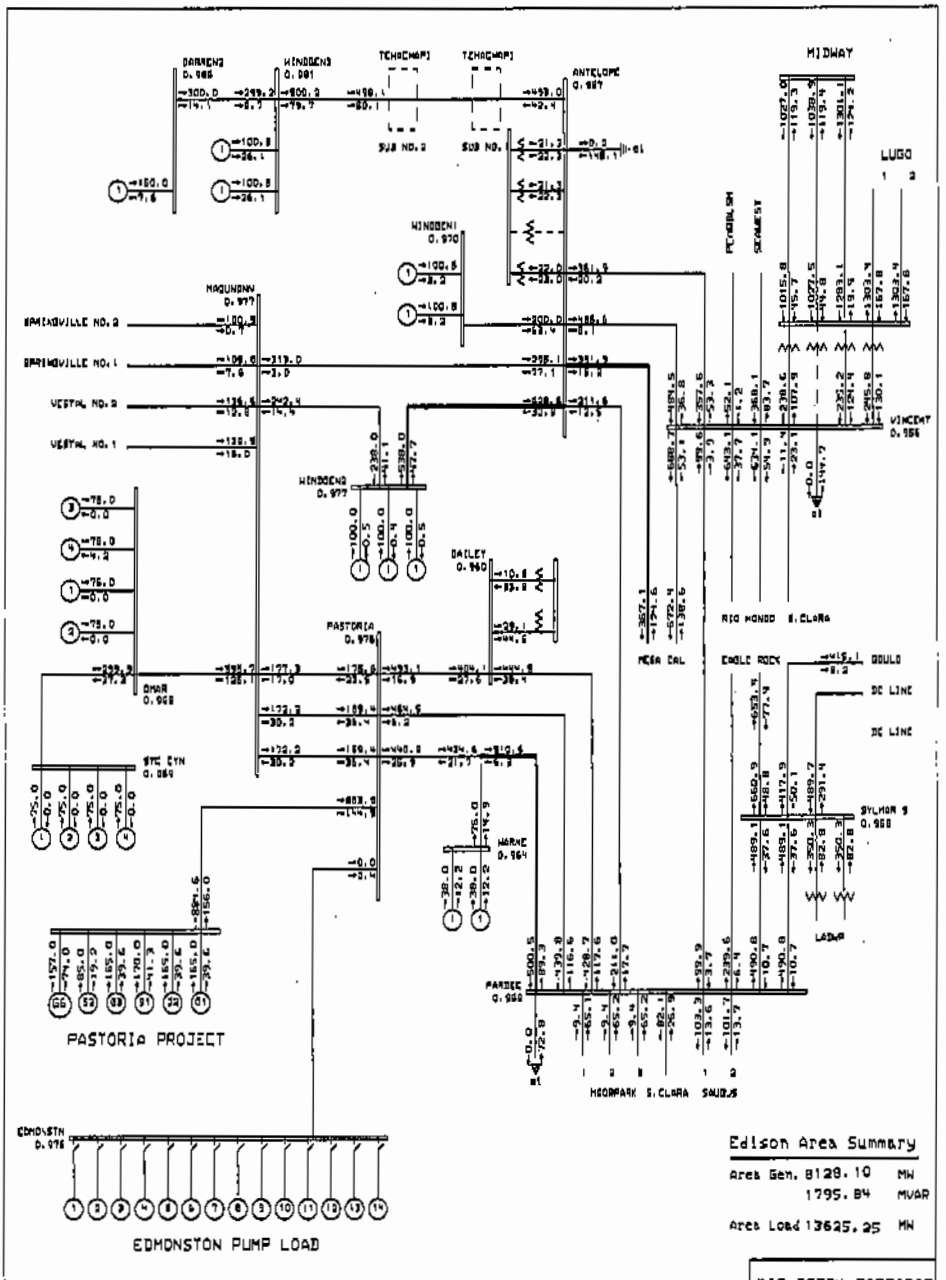
DARRENG
WINDDENG
TEHACHAPI
TEHACHAPI
ANTELOPE
MIDWAY
LUGO
SUB NO. 2
SUB NO. 1
WINDDENI
MAGUNNAY
BAKERSFIELD NO. 2
BAKERSFIELD NO. 1
VESTAL NO. 2
VESTAL NO. 1
WINDDENG
DAILEY
PASTORIA
OMAR
STC CYN
MARNE
PARDEE
MEADOWPARK
S.CLARA
SAUGUS
MESA CAL
EAGLE ROCK
RIO HONDO
S.CLARA
GOULD
DC LINE
DC LINE
SYLMAR 9
LADWP
VINCENT
EDMONSTN
PASTORIA PROJECT
EDMONSTON PUMP LOAD
Edison Area Summary
Area Gen. 8128.10 MW
1795.84 MVAR
Area Load 13625.25 MW
BIG CREEK CORRIDOR
230 SYSTEM
General Electric International, Inc. PSLF Program
GENERAL ELECTRIC COMPANY
CALPINE PASTORIA ADDITION- SYSTEM IMPACT STUDY
PROPOSED IN SERVICE DATE: JULY 2005
CASE STUDY 6: POST-PROJECT LSA WITH VENTURA GENERATION
N-01 BASE CASE

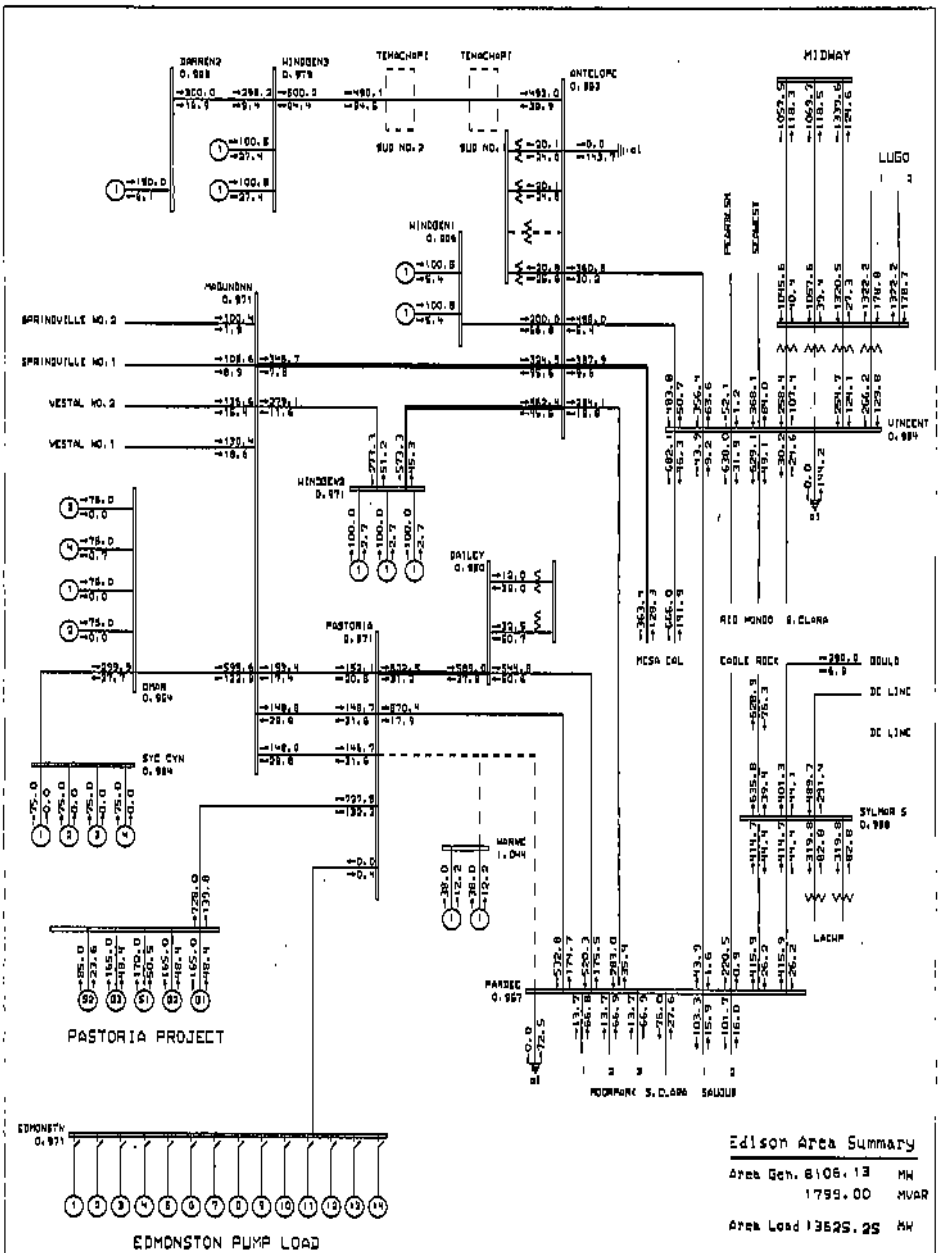
BARREN2
0.988
WINDGEN3
0.979
TEHACHAPI
TEHACHAPI
SUB NO. 2
SUB NO. 1
ANTELOPE
0.993
MIDWAY
LUGO
PEARLSX
SEARMEST
WINDGEN1
0.986
MADUNDNN
0.971
SPRINGVILLE NO. 2
SPRINGVILLE NO. 1
VESTAL NO. 2
VESTAL NO. 1
VINCENT
0.984
WINDGEN2
0.971
DAILEY
0.980
PASTORIA
0.971
RIO MONDO
S. CLARA
MESA COL
EAGLE ROCK
DOULS
DC LINE
DC LINE
OMAR
0.964
SYC CYN
0.984
SYLMAR S
0.988
LACHP
MORNNE
1.044
PARSEC
0.957
MOORPARK
S. CLARA
SAUGUS
PASTORIA PROJECT
EDMONSTN
0.971
EDMONSTON PUMP LOAD
Edison Area Summary
Area Gen. 8106.13 MW
1799.00 MVAR
Area Load 13625.25 MW
BIG CREEK CORRIDOR
230 SYSTEM
General Electric International, Inc. PSLF Program
GENERAL ELECTRIC COMPANY
CALPINE PASTORIA ADDITION-SYSTEM IMPACT STUDY
PROPOSED IN-SERVICE DATE: JULY 2005
CASE STUDY 5: PRE-PROJECT LSP (WITH MENTOR GENERATION)
H-32 PARSEC-PASTORIA MARNE 230 KV

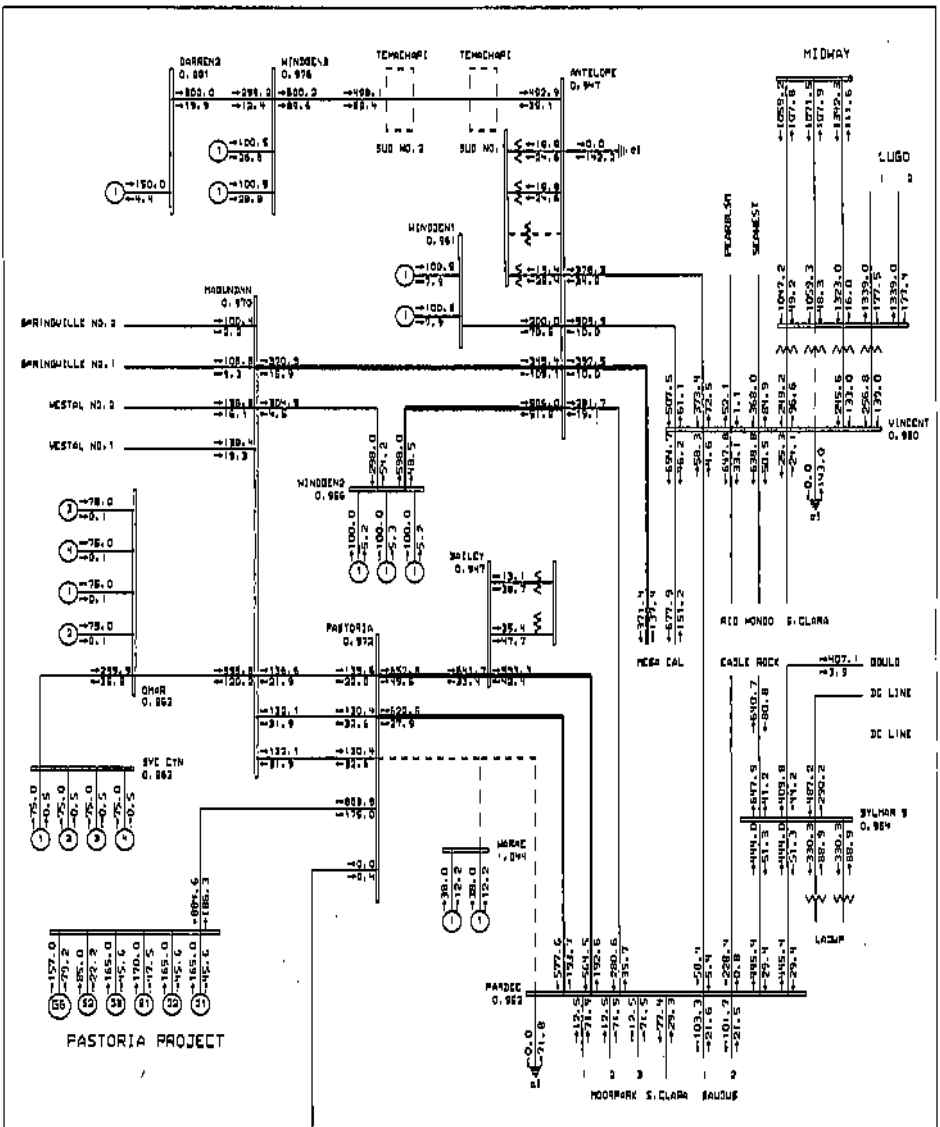

Edison Area Summary

Area Gen. 8128.10 MW
1955.20 MVAR

Area Load 13625.25 MW

DIG CREEK CORRIDOR

230 SYSTEM

General Electric International, Inc. PSLF Program

GENERAL ELECTRIC COMPANY

CALPINE PASTORIA ADDITION- SYSTEM IMPACT STUDY
PROPOSED IN SERVICE DATE: JULY 2006
CASE STUDY 6: POST-PROJECT LSP (WITH VENTURA GENERATION)

H-13 PARDEE-PASTORIA-MOORPARK 230 KV

c:\pslf\131\cal\plnetyer expand
c:\pslf\131\cal\plnetyer expand
Rating = 1

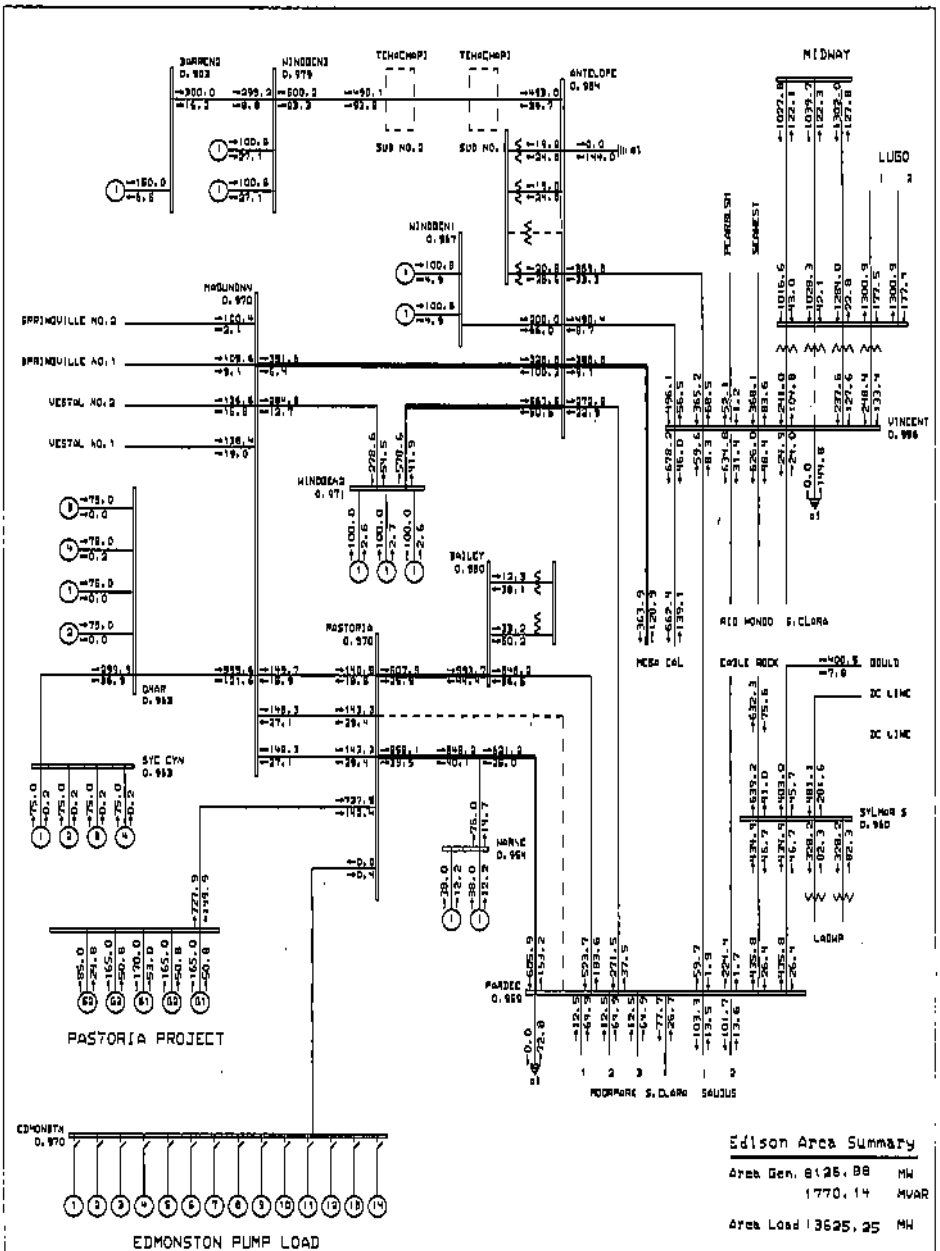
BARRENS
WINDBENS
TEHACHAPI
TEHACHAPI
ANTELOPE
MIDWAY
LUGO
SUB NO. 2
SUB NO. 1
WINDBENI
MOJUNONV
SPRINGVILLE NO. 2
SPRINGVILLE NO. 1
VESTAL NO. 2
VESTAL NO. 1
PEARDS 91
SEAWEST
VINCENT
WINDBEN2
BAILEY
PASTORIA
MESA CAL
RIO HONDO
S. CLARA
EAGLE ROCK
DOULD
DC LINE
DC LINE
DHAR
SYC CYN
MARVE
SYLMAR S
LADWP
PARDEC
MOORPARK
S. CLARA
SAUGUS
PASTORIA PROJECT
EDMONSTON
EDMONSTON PUMP LOAD
Edison Area Summary
Area Gen. 8125.88 MW
1770.14 MVAR
Area Load 13625.25 MW
BIG CREEK CORRIDOR
230 SYSTEM
General Electric International, Inc. PSLF Program
GENERAL ELECTRIC COMPANY
CALPINE PASTORIA ADDITION-SYSTEM IMPACT STUDY
PROPOSED IN-SERVICE DATE: JULY 2005
CASE STUDY 5: PRE-PROJECT LSP (WITH VENTURA GENERATION)
H-15 PARDEE-PASTORIA 230 KV

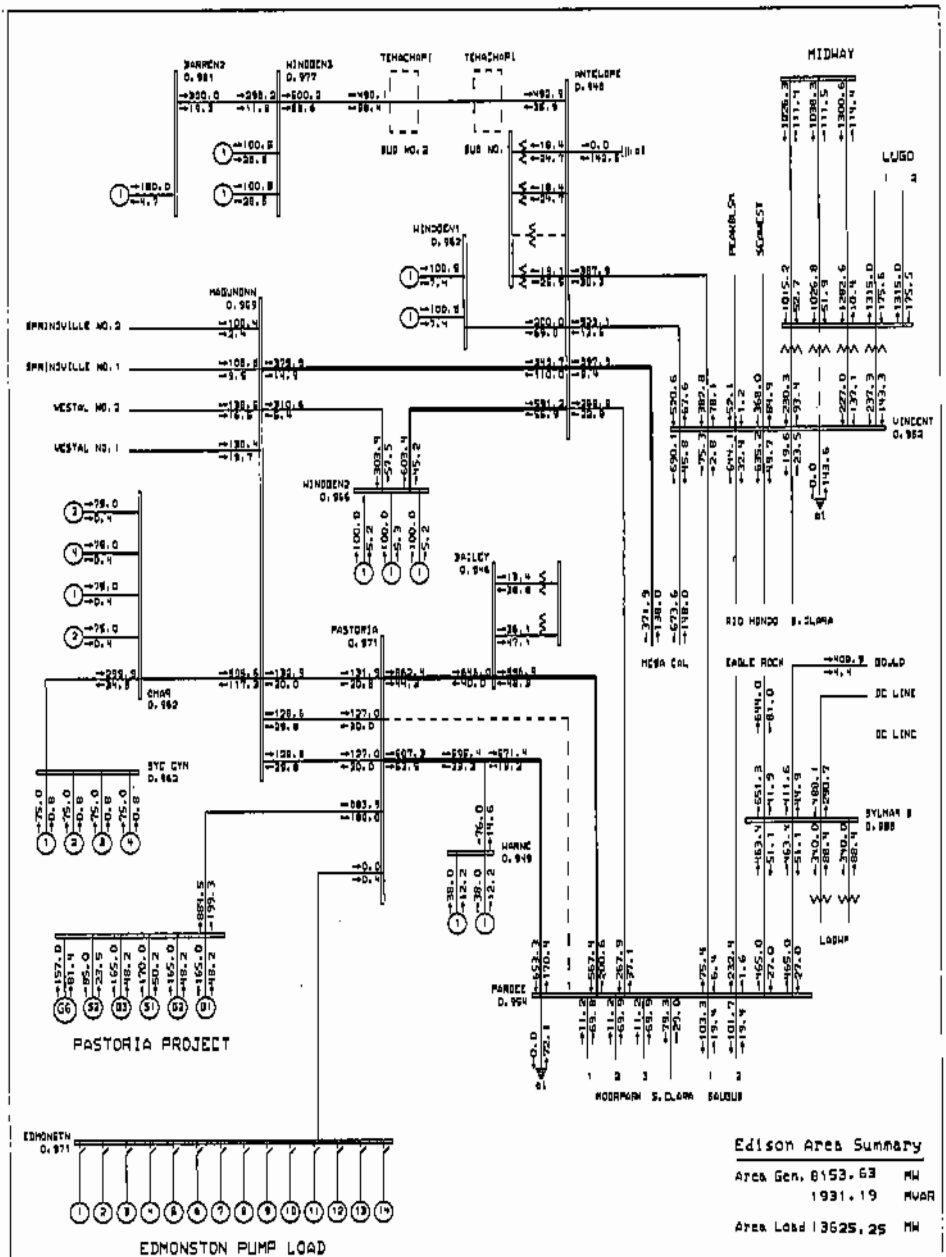
BARRENS2
0.981
WINDDEN3
0.977
TEHACHAPI
TEHACHAPI
ANTELOPE
0.948
MIDWAY
LUGO
SUB NO.2
SUB NO.1
WINDDEN1
0.962
MADUNONN
0.969
SPRINSVILLE NO.2
SPRINSVILLE NO.1
VESTAL NO.2
VESTAL NO.1
WINDDEN2
0.966
BAILEY
0.946
PASTORIA
0.971
CHAR
0.962
SYC GYN
0.962
WARNE
0.949
MARDEE
0.954
VINCENT
0.952
PEARDLSN
SCHMCST
RIO HONDO
S.CLARA
MESA CAL
EAGLE ROCK
BOULD
DC LINE
DC LINE
SYLMAR B
0.988
LADWP
MODRAPAN
S.CLARA
SOLDUS
PASTORIA PROJECT
EDMONSTN
0.971
EDMONSTON PUMP LOAD
Edison Area Summary
Area Gen. 8153.63 MW
1931.19 MVAR
Area Load 13625.25 MW
BIG CREEK CORRIDOR
230 SYSTEM
General Electric International, Inc. PSLF Program
GENERAL ELECTRIC COMPANY
CALPINE PASTORIA ADDITION: SYSTEM IMPACT STUDY
PROPOSED IN SERVICE DATE: JULY 2006
CASE STUDY G: POST-PROJECT LSP (WITH VENTURA GENERATION)
H-1: PARDEE-PASTORIA 230 KV

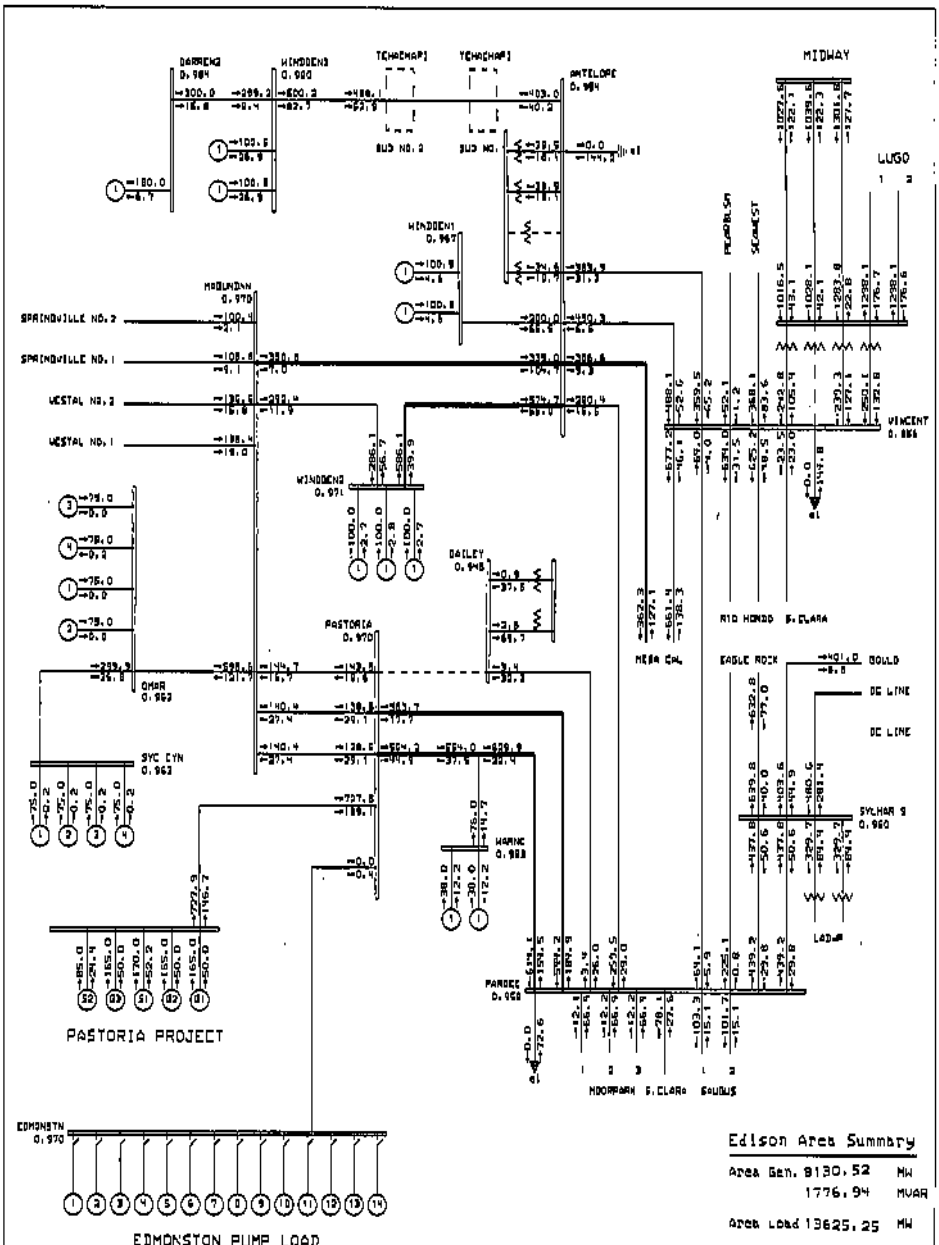
DARRECK 0.984
WINDDEN3 0.980
TEHACHAP1
TEHACHAP1
BUS NO. 2
BUS NO. 1
ANTELOPE 0.984
MIDWAY
LUGO
WINDDEN1 0.987
MOUNDAN 0.970
SPRINDVILLE NO. 2
SPRINDVILLE NO. 1
WESTAL NO. 2
WESTAL NO. 1
WINDDEN2 0.971
VINCENT 0.986
BAILEY 0.948
PASTORIA 0.970
OMAR 0.963
SYC CYN 0.963
MEGA CAL
RIO HONDO
S.CLARA
EAGLE ROCK
GOULD
DC LINE
DC LINE
SYLMAR S 0.980
LADWP
MAHNE 0.988
PARDEE 0.959
MOORPARK
S.CLARA
SAUGUS
PASTORIA PROJECT
EDMONSTN 0.970
EDMONSTON PUMP LOAD
Edison Area Summary
Area Gen. 8130.52 MW
1776.94 MVAR
Area Load 13625.25 MW
BIG CREEK CORRIDOR
230 SYSTEM
General Electric International, Inc. PSLF Program
GENERAL ELECTRIC COMPANY
CALPINE PASTORIA ADDITION-SYSTEM IMPACT STUDY
PROPOSED IN-SERVICE DATE: JULY 2006
CASE STUDY S1 PRE-PROJECT LSP (WITH VENTURA GENERATION)
N-1: BAILEY-PASTORIA 230 KV

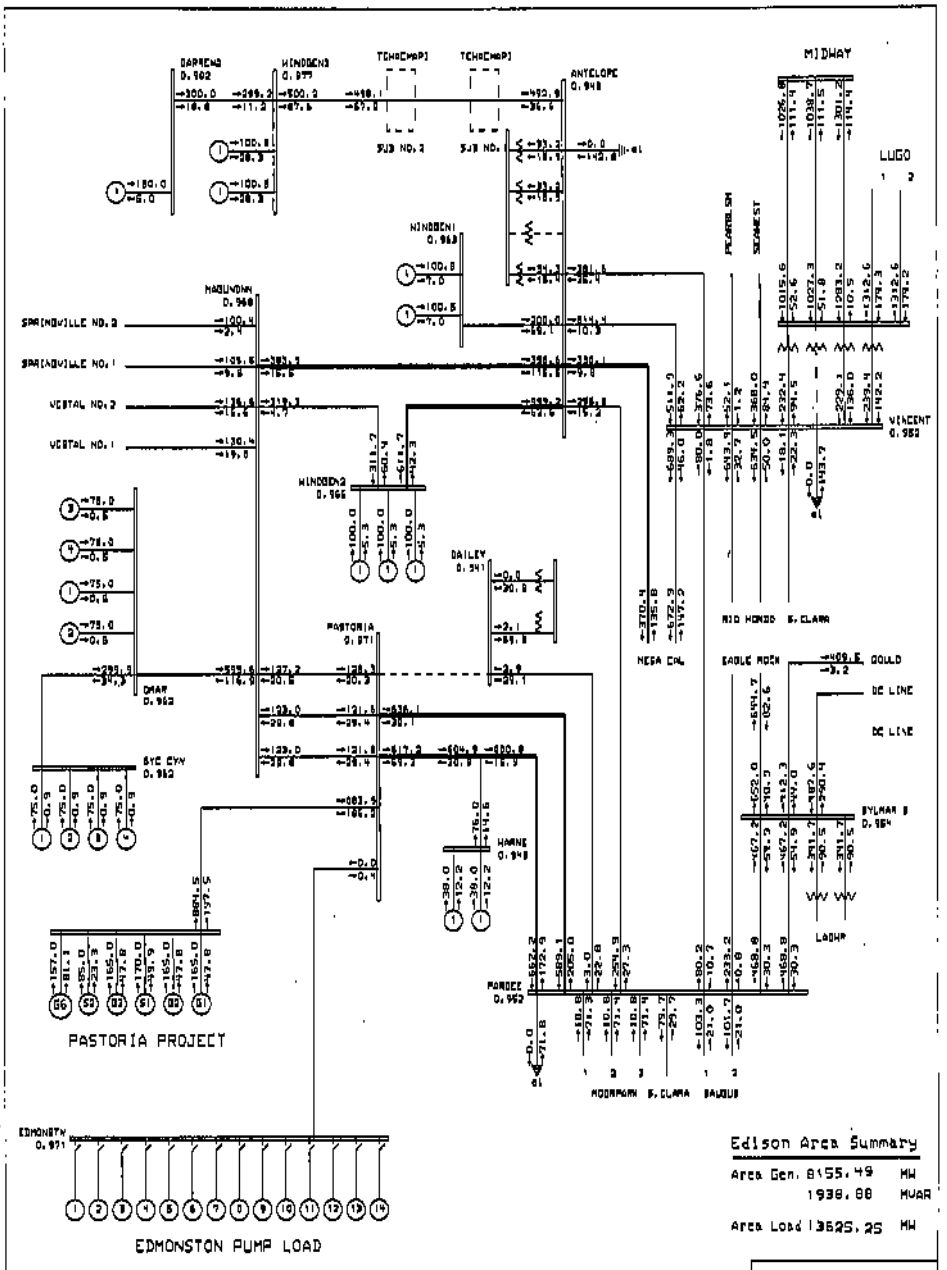

Edison Area Summary

Area Gen. 8155.49 MW
1938.88 MVAR

Area Load 13625.25 MW

BIG CREEK CORRIDOR
230 SYSTEM

General Electric International, Inc. PSLF Program

GENERAL ELECTRIC COMPANY

CALPINE PASTORIA GENERATION SYSTEM IMPACT STUDY
PROPOSED IN SERVICE DATE: JULY 2006
CASE STUDY 6: POST-PROJECT LSP (WITH MONTANA GENERATION)

4-1: DAILEY-PASTORIA 230 kV

c:\wpsif13\calpine\ref expand
c:\wpsif13\calpine\ref expand
Rating = 1

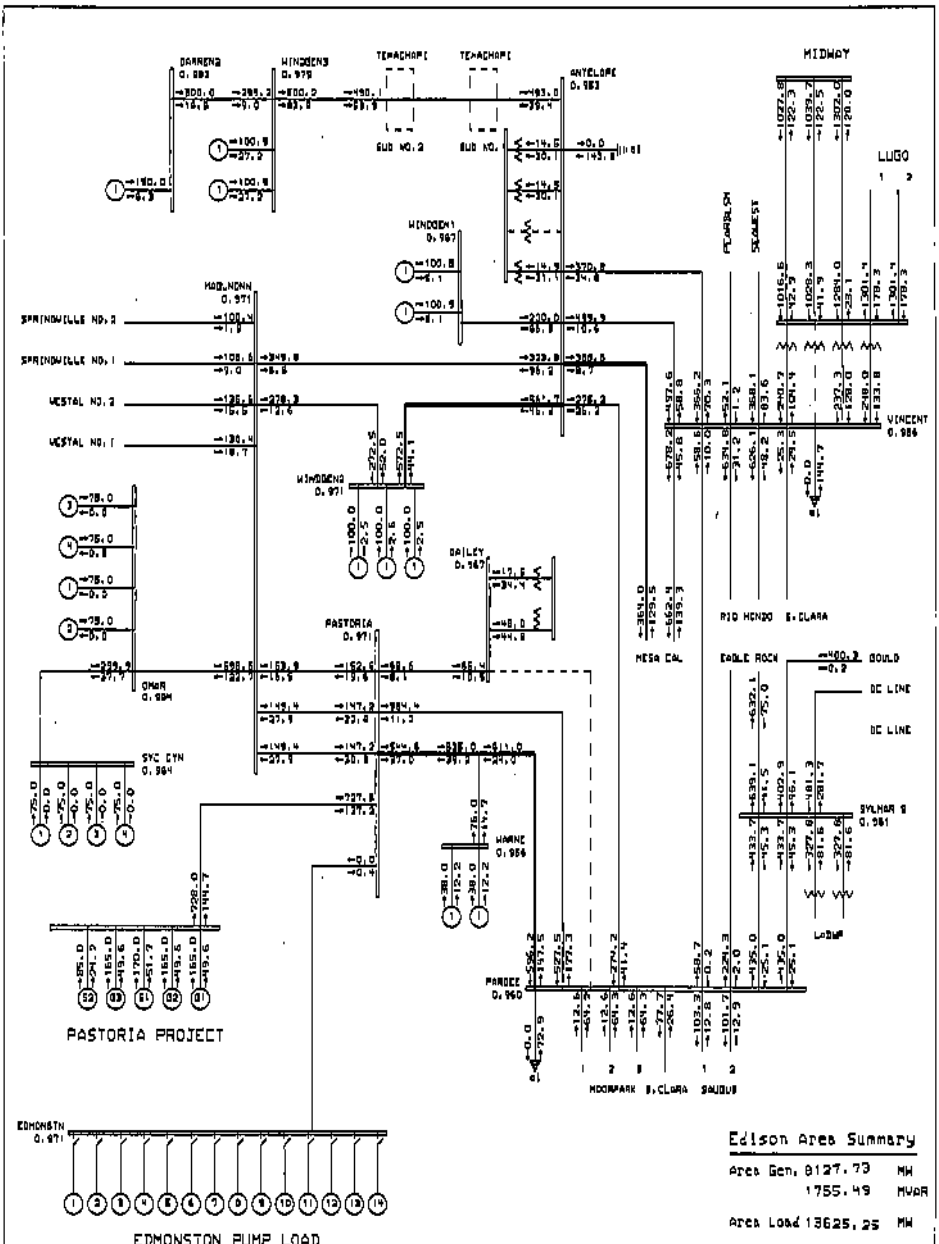

Edison Area Summary

Area Gen. 8127.73 MW
1755.49 MVAR

Area Load 13625.25 MW

DIG CREEK CORRIDOR

230 SYSTEM

General Electric International, Inc. PSLF Program

Net Key On 13:59:52 2005

GENERAL ELECTRIC COMPANY

CALPINE PASTORIA ADDITION-SYSTEM IMPACT STUDY
PROPOSED ON-SERVICE DATE: JULY 2006
CASE STUDY 5: PRE-PROJECT LSP (WITH VENTURA EXCEPTIONS)

N-1: BAILEY-PARDEE 230 KV

c:\psdi11\cai\pline\ref expand
c:\psdi11\cai\pline\ref expand
Rating = 1

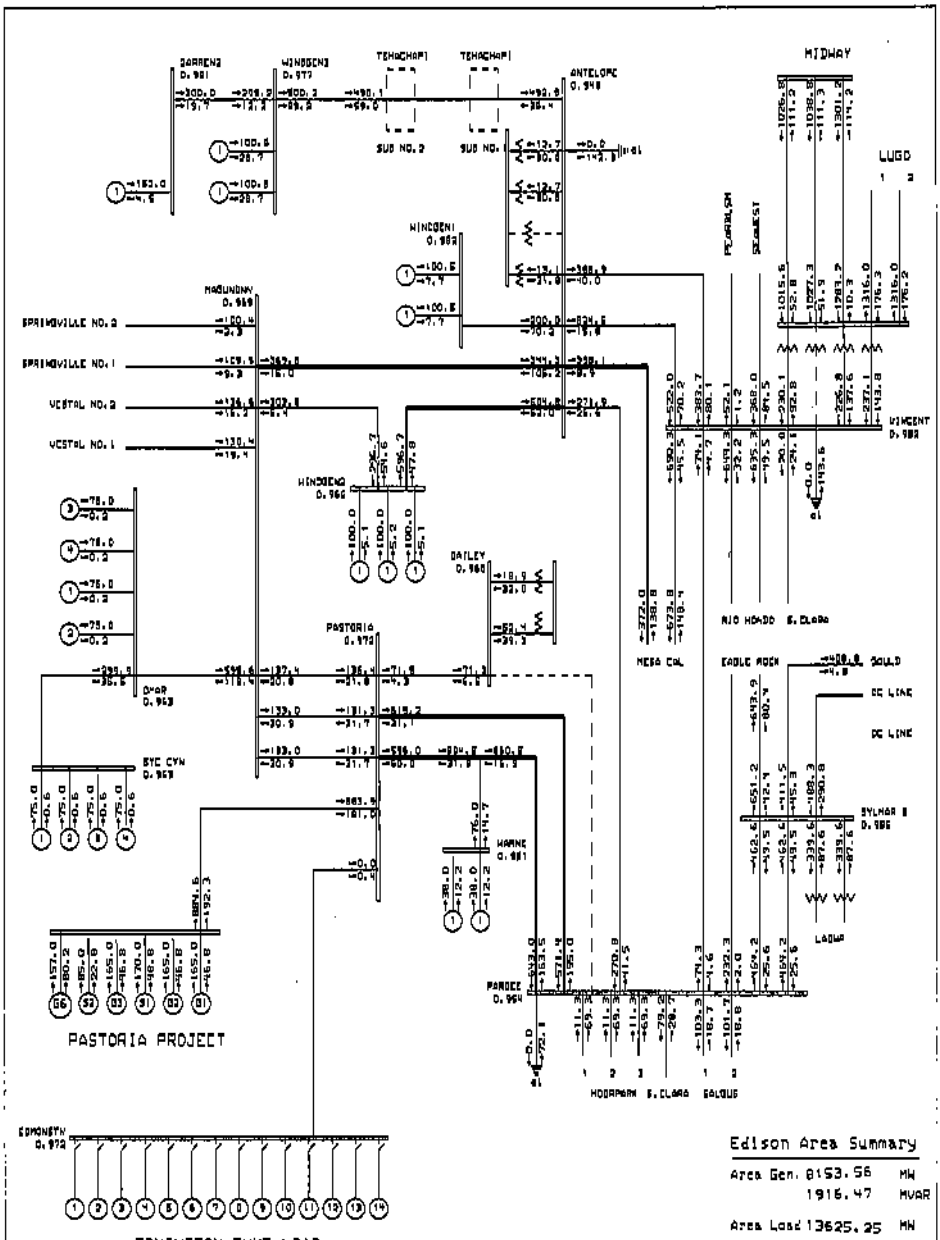

Edison Area Summary

Area Gen. 8153.56 MW
1916.47 MVAR

Area Load 13625.25 MW

BIG CREEK CORRIDOR

230 SYSTEM

MW/MVAR Wed May 04 13:55:21 2005

General Electric International, Inc. PSLF Program

GENERAL ELECTRIC COMPANY

CALPINE PASTORIA ADDITION: SYSTEM IMPACT STUDY
PROPOSED L4 SERVICE DATE: JULY 2006
CASE STUDY 6: POST-PROJECT LSP (WITH VENTURA GENERATION)

N-1: DAILEY-PARDEE 230 kV

c:\ge\pf13\calpine\pf expand
c:\ge\pf13\calpine\pf expand
Rating: 1

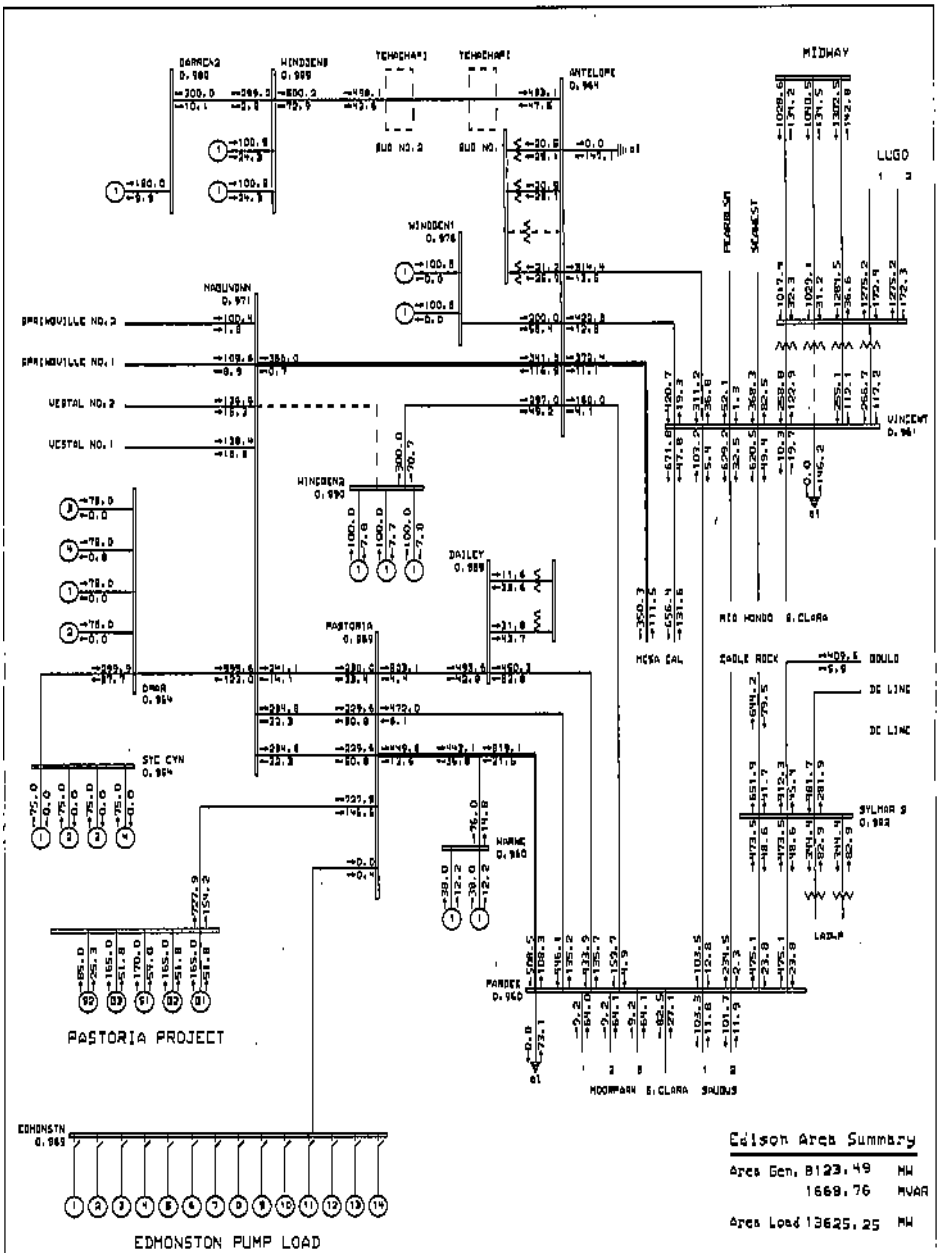
BARRCK2
0.980
WINDSENB
0.989
TEHACHAP1
TEHACHAP2
ANTELOPE
0.964
MIDWAY
LUGO
BUS NO. 2
BUS NO. 1
WINDDEN1
0.976
NAGUVAN
0.971
SPRINGVILLE NO. 2
SPRINGVILLE NO. 1
VESTAL NO. 2
VESTAL NO. 1
PEARDLSN
SEAWEST
VINCENT
0.961
WINCDEN2
0.990
DAILEY
0.989
PASTORIA
0.989
MESA CAL
RIO MONDO
S.CLARA
EAGLE ROCK
GOULD
DC LINE
DC LINE
DMBR
0.954
SYC CYN
0.954
WARNE
0.960
SYLMAR S
0.982
LADWP
PANDER
0.960
MOORPARK
S.CLARA
SAUGUS
PASTORIA PROJECT
EDMONSTN
0.969
EDMONSTON PUMP LOAD
Edison Area Summary
Area Gen. 8123.49 MW
1668.76 MVAR
Area Load 13625.25 MW
BIG CREEK CORRIDOR
230 SYSTEM
General Electric International, Inc. PSLF Program
GENERAL ELECTRIC COMPANY
CALPINE PASTORIA ADDITION-SYSTEM IMPACT STUDY
PROPOSED IN-SERVICE DATE: JULY 2006
CASE STUDY 5: PRE-PROJECT LSP (WITH VENTURA GENERATION)
N-1: NAGUVAN-COTTONWOOD 230 KV

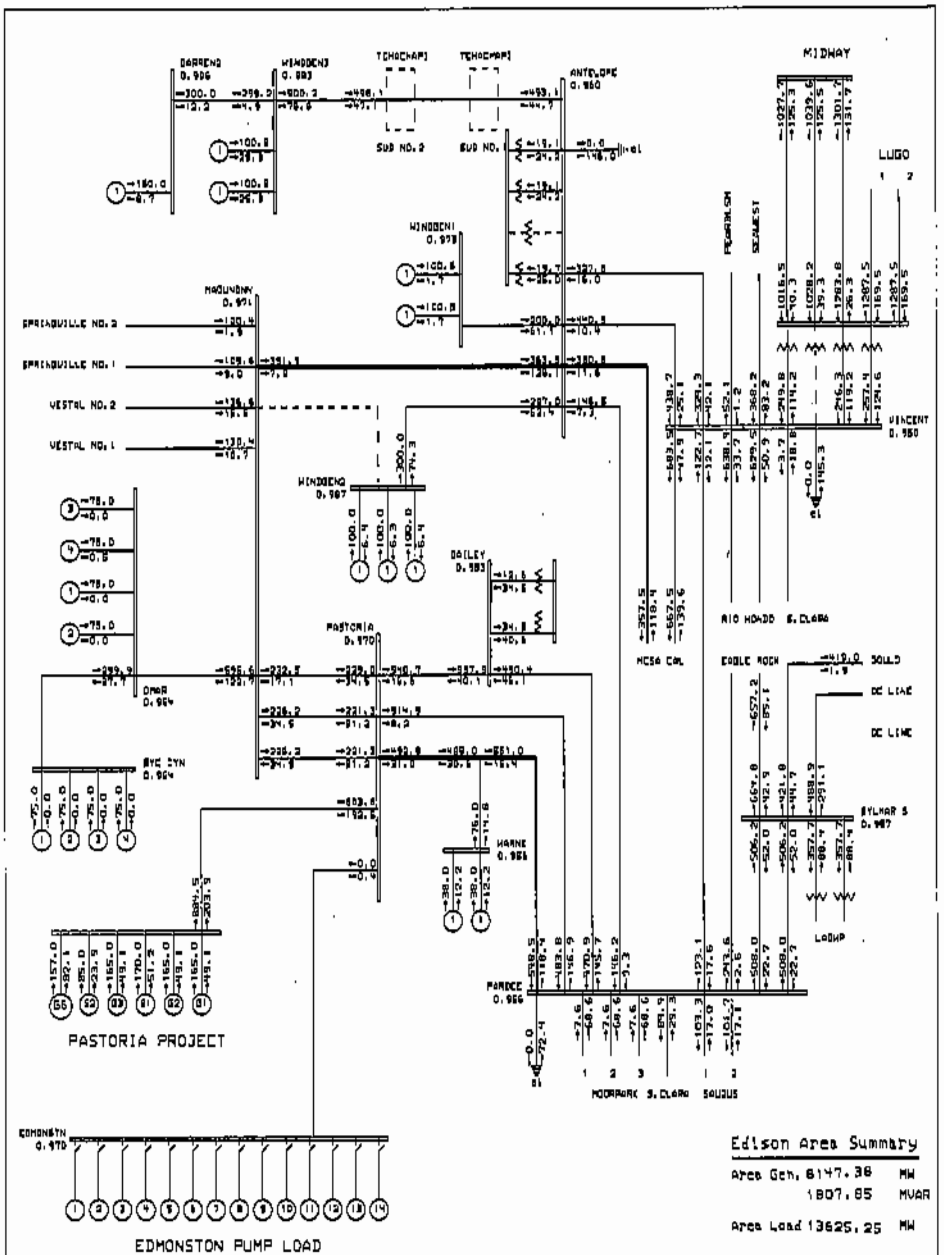
BARRENS
0.996
WINDDENS
0.983
TEHACHAPI
TEHACHAPI
ANTELOPE
0.960
SUB NO. 2
SUB NO. 1
MIDWAY
LUGO
WINDDENI
0.978
MAGUNDNY
0.991
SPRINGVILLE NO. 2
SPRINGVILLE NO. 1
VESTAL NO. 2
VESTAL NO. 1
PEARBLOSSOM
SEMAFOR
VINCENT
0.950
WINDDENQ
0.987
DAILEY
0.983
PASTORIA
0.970
RIO HONDO
S. CLARA
MESA CAL
EAGLE ROCK
SOLLD
DC LINE
DC LINE
OMAR
0.984
BYE SYN
0.984
SYLMAR S
0.987
LOADMP
HARNE
0.981
PARDEE
0.966
MOORPARK
S. CLARA
SOUSUS
PASTORIA PROJECT
EDMONSTN
0.970
EDMONSTON PUMP LOAD
Edison Area Summary
Area Gen. 8147.38 MW
1807.85 MVAR
Area Load 13625.25 MW
DIG CREEK CORRIDOR
230 SYSTEM
General Electric International, Inc. PSLF Program
GENERAL ELECTRIC COMPANY
CALPINE PASTORIA ADDITION- SYSTEM IMPACT STUDY
PROPOSED IN SERVICE DATE: JULY 2006
CASE STUDY 6: POST-PROJECT LSP (WITH VENTURA SCENARIOS)
H-1: WINDDENQ-COTTONWND 230 TV

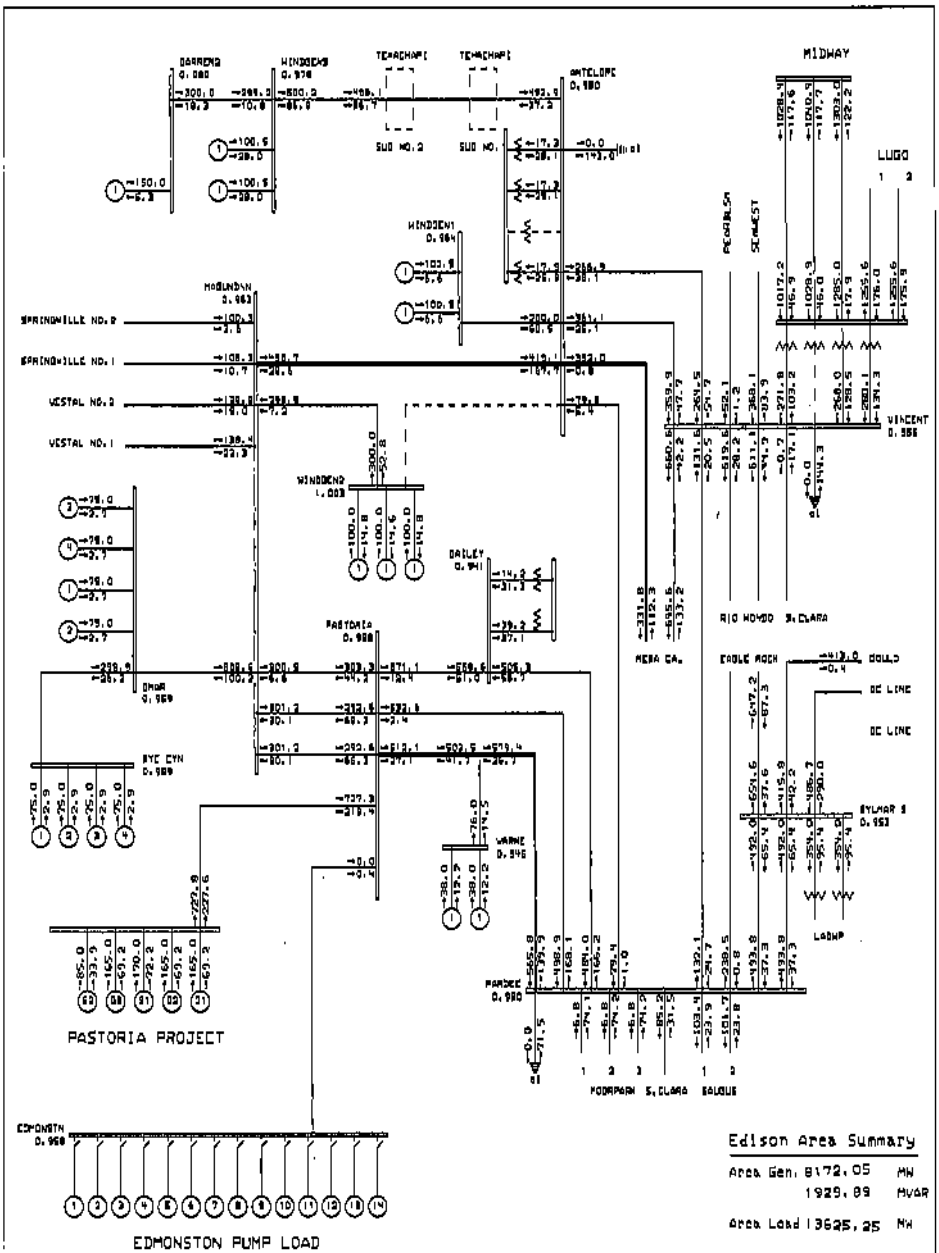
DARRENO
WINDDEN2
TEHACHAPI
ANTELOPE
MIDWAY
LUGO
SUB NO.2
SUB NO.1
WINDDEN1
MOBLUNDN
SPRINGVILLE NO.2
SPRINGVILLE NO.1
VESTAL NO.2
VESTAL NO.1
VINCENT
WINDDEN2
DAILEY
PASTORIA
RIO HONDO
S.CLARA
MESA CA.
EAGLE ROCK
DOULD
DC LINE
DC LINE
BYE CYN
SYLMAR 1
LADWP
WARNE
PARDEE
MOORPARK
S.CLARA
EAGLUS
PASTORIA PROJECT
EDMONSTN
EDMONSTON PUMP LOAD
Edison Area Summary
Area Gen. 8172.05 MW
1929.09 MVAR
Area Load 13625.25 MW
BIG CREEK CORRIDOR
230 SYSTEM
General Electric International, Inc. PSLF Program
GENERAL ELECTRIC COMPANY
DALPINE PASTORIA ADDITION-SYSTEM IMPACT STUDY
PROPOSED IN-SERVICE DATE: JULY 2006
CASE STUDY 5: PAYE-PROJECT LSP (WITH VENTURA GENERATION)
H-1: ANTELOPE-CONTOWMIND 230 KV

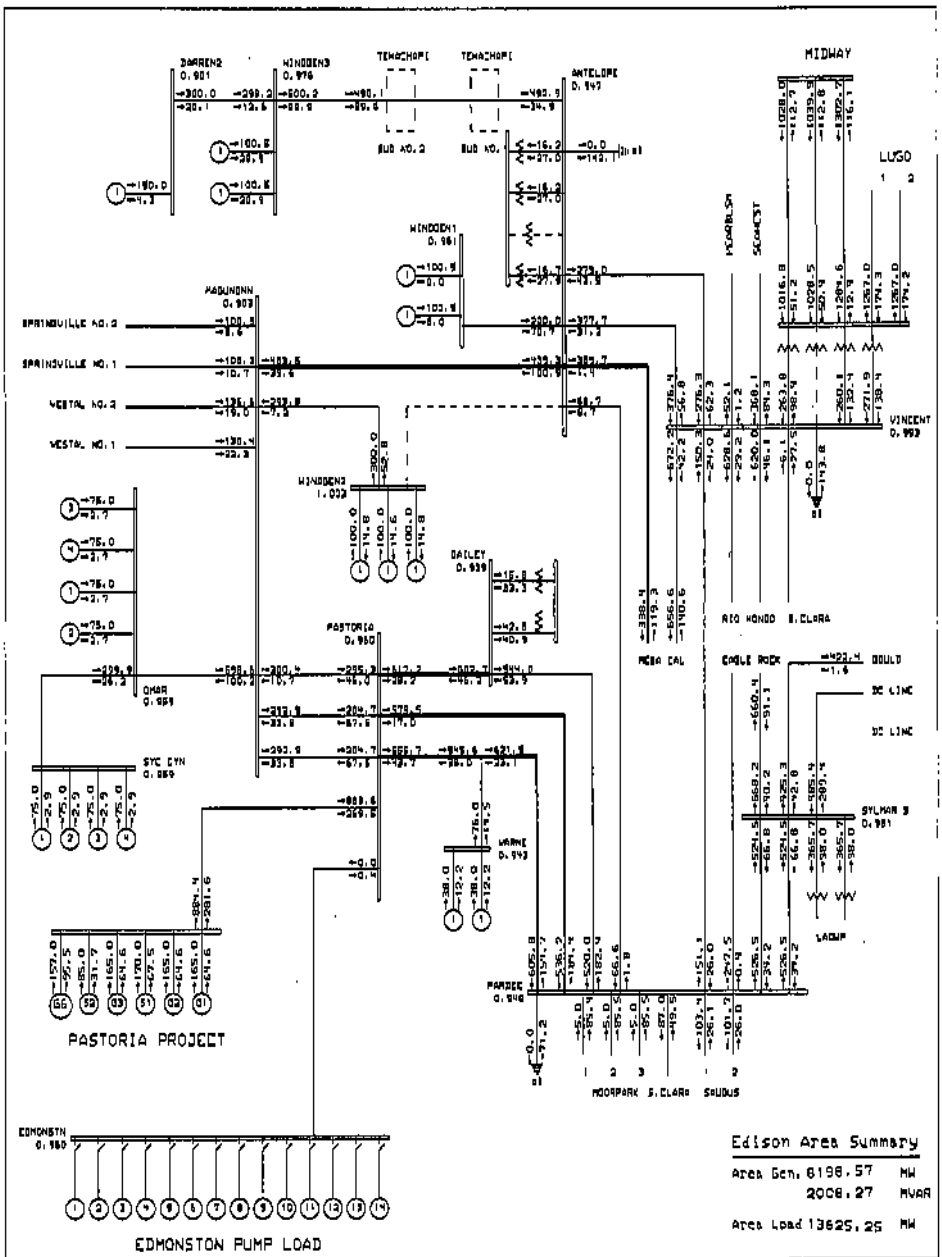
DARREN2
WINDDEN3
TEHACHAPI
TEHACHAPI
ANTELOPE
MIDWAY
LUGO
SUB NO.2
SUB NO.
WINDDEN1
MOJUNION
SPRINGVILLE NO.2
SPRINGVILLE NO.1
WESTAL NO.2
WESTAL NO.1
WINDDEN2
DAILEY
PASTORIA
OMAR
SYC CYN
WARNE
PANDEE
MOORPARK
S.CLARA
SOLDUS
MESA CAL
EAGLE ROCK
RIO HONDO
S.CLARA
VINCENT
SYLMAR 3
LADWP
GOULD
DC LINE
DC LINE
EDMONSTN
PASTORIA PROJECT
EDMONSTON PUMP LOAD
Edison Area Summary
Area Gen. 6198.57 MW
2008.27 MVAR
Area Load 13625.25 MW
BIG CREEK CORRIDOR
230 SYSTEM
General Electric International, Inc. PSLF Program
GENERAL ELECTRIC COMPANY
CALPINE PASTORIA ADDITION- SYSTEM IMPACT STUDY
PROPOSED IN SERVICE DATE: JULY 2005
CASE STUDY G: POST-PROJECT LSP (WITH VENTURA GENERATION)
H-1: ANTELOPE-CONTOWN 230 KV

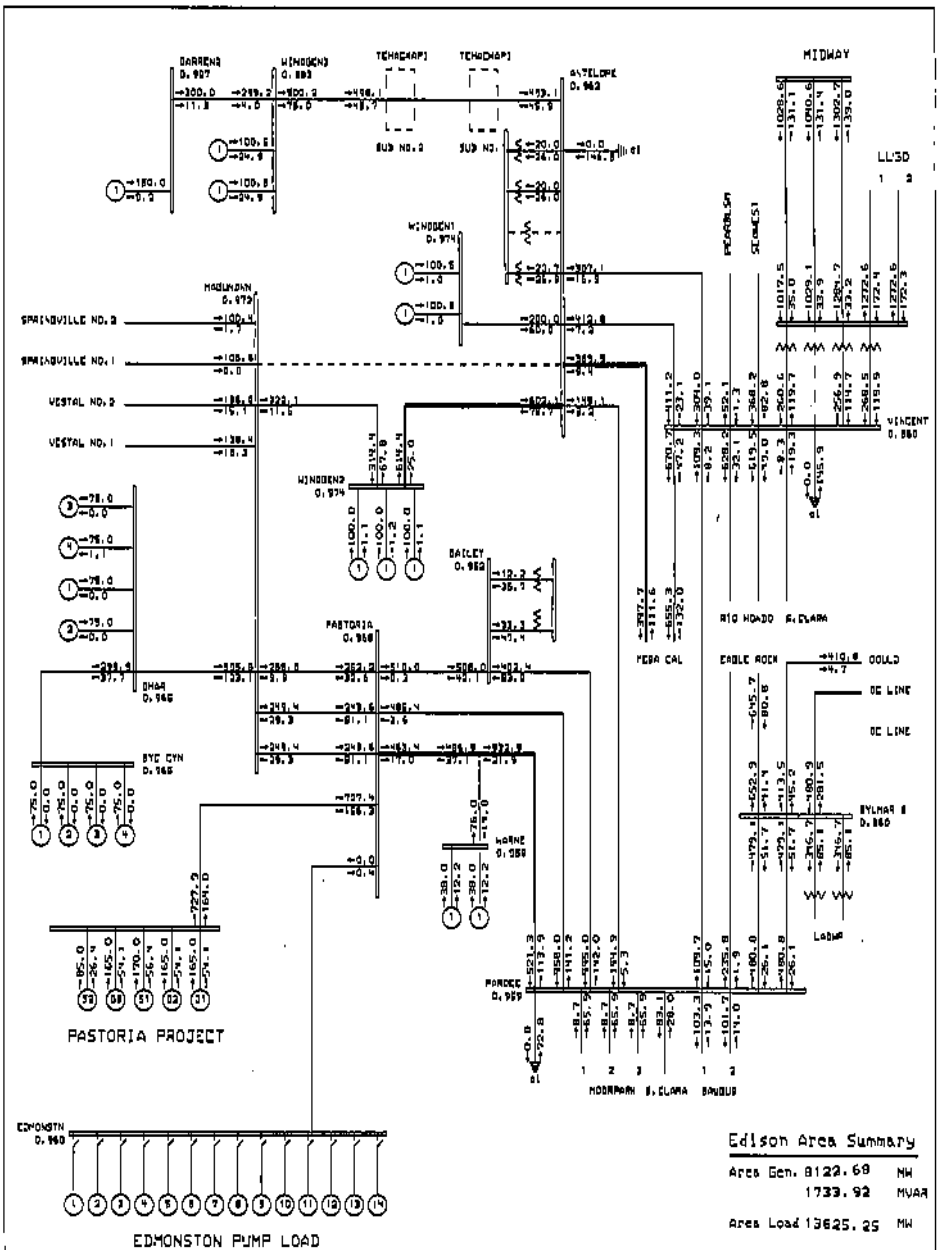
DARRENS
WINDGEN3
TEHACHAPI
TEHACHAPI
ANTELOPE
MIDWAY
SUB NO. 2
SUB NO. 1
LL130
WINDGEN1
MOUNTAIN
SPRINGVILLE NO. 2
SPRINGVILLE NO. 1
VESTAL NO. 2
VESTAL NO. 1
WINDGEN2
BAILEY
PASTORIA
DHAR
SYC CYN
HORNE
PORTER
MOORPARK
EDMONSTN
VINCENT
RIO HONDO
MESA CAL
EAGLE ROCK
GOULD
OC LINE
OC LINE
SYLMAR
LADWP
PASTORIA PROJECT
EDMONSTON PUMP LOAD
Edison Area Summary
Area Gen. 8122.69 MW
1733.92 MVAR
Area Load 13625.25 MW
BIG CREEK CORRIDOR
230 SYSTEM
GENERAL ELECTRIC COMPANY
PASTORIA ADDITION-SYSTEM IMPACT STUDY
PROPOSED IN-SERVICE DATE: JULY 2005
CASE STUDY 5: PRE-PROJECT LSP WITH VENTURA GENERATION

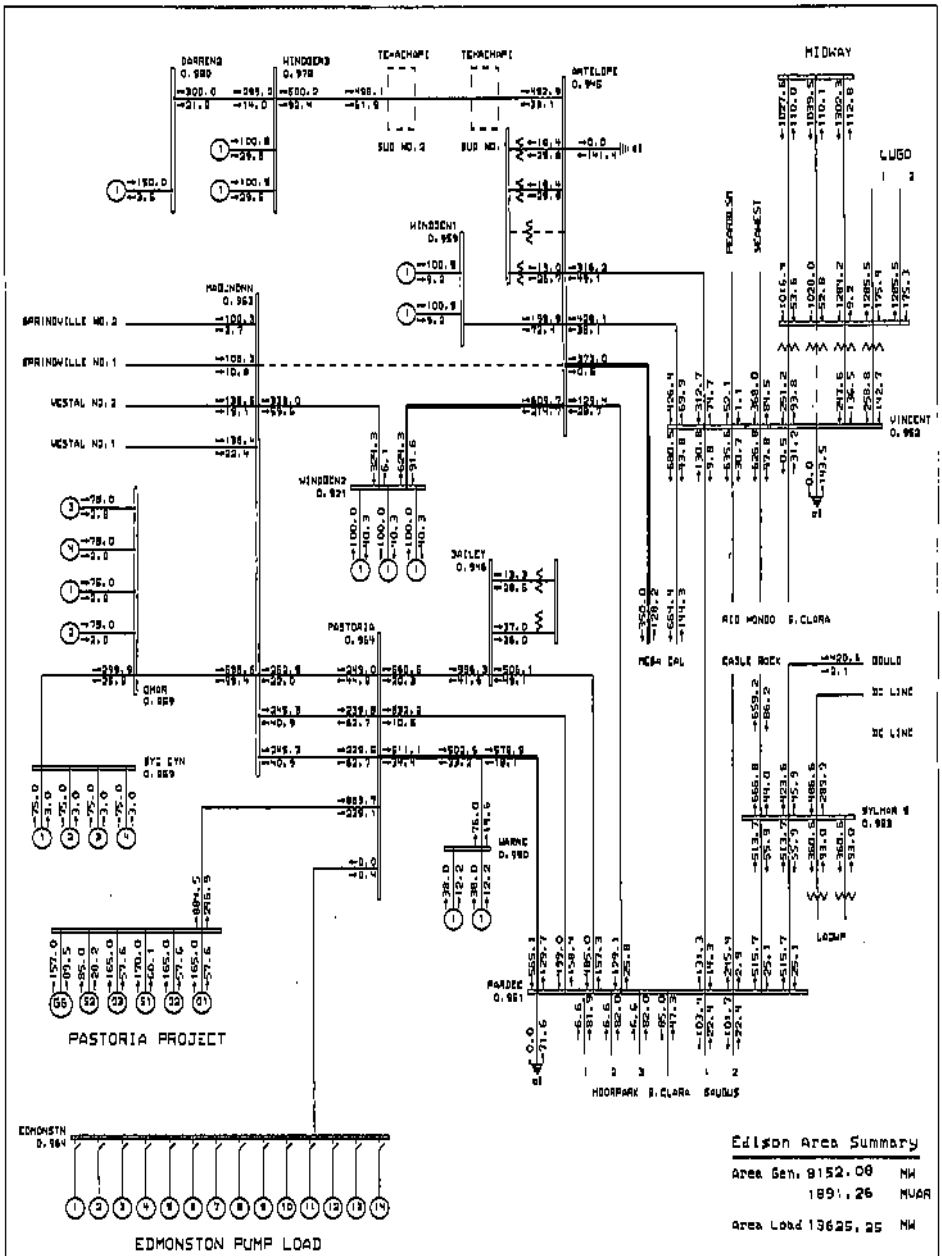

Edison Area Summary

Area Gen. 8152.08 MW
1891.26 MVAR

Area Load 13625.25 MW

BIG CREEK CORRIDOR
230 SYSTEM

MAXVAR Wed May 04 12:57:23 2005

General Electric International, Inc. PSLF Program

GENERAL ELECTRIC COMPANY

CALPINE PASTORIA ADDITION- SYSTEM IMPACT STUDY
PROPOSED IN SERVICE DATE: JULY 2006
CASE STUDY 6: POST-PROJECT LSP (WITH VENTURA GENERATION)

H-1: ANTELOPE-MAGUNDEN 230 KV

c:\ups\d\3\cal\pl\ref expand
c:\ups\d\3\cal\pl\ref expand
Rating = 1

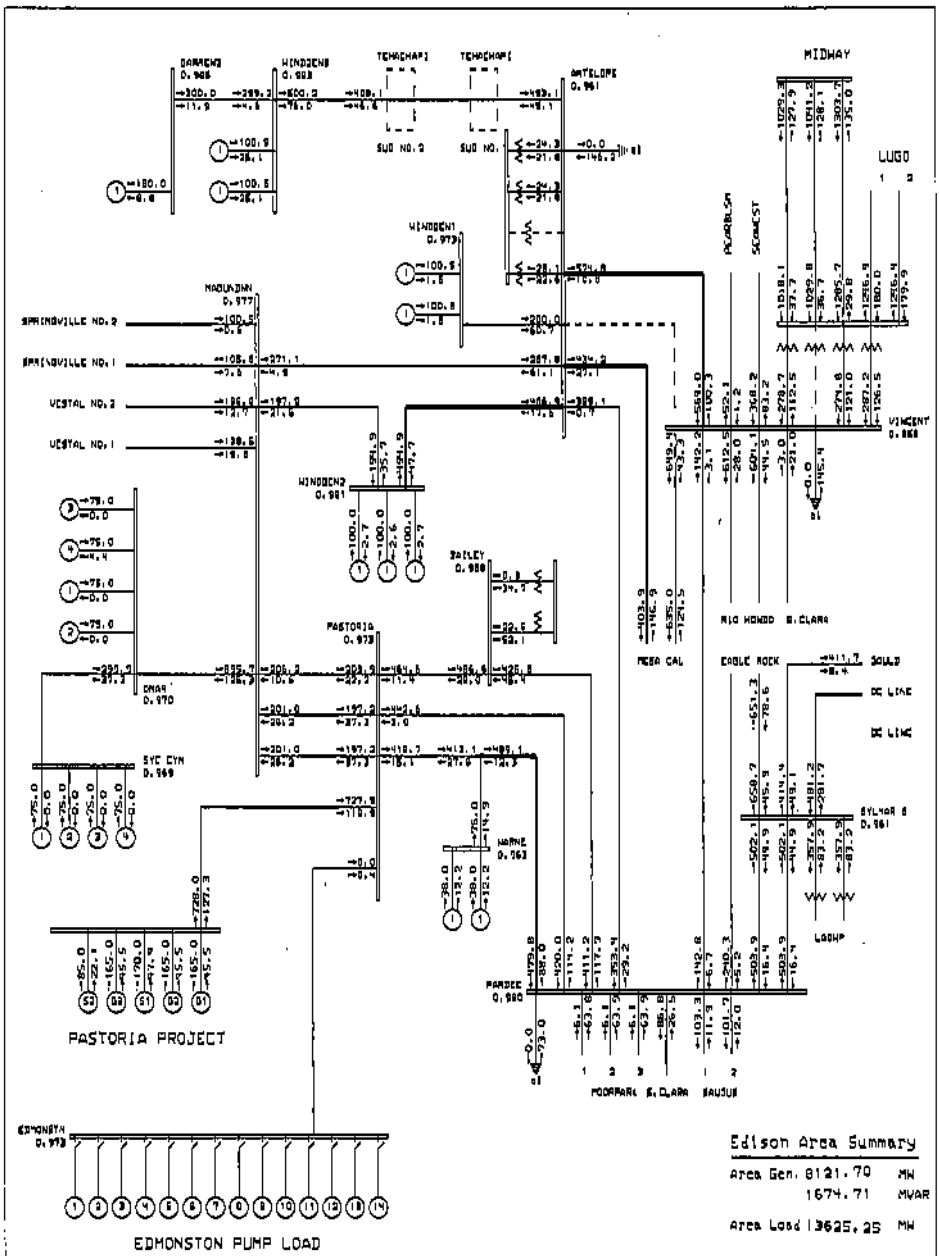
DARWIN 0.985
WINDSENS 0.983
TEHACHAPI
TEHACHAPI
ANTELOPE 0.961
MIDWAY
LUGO
SUD NO. 2
SUD NO. 1
WINDSENT 0.979
MADUA-INN 0.977
SPRINGVILLE NO. 2
SPRINGVILLE NO. 1
VESTAL NO. 2
VESTAL NO. 1
WINDSENS 0.981
BAILEY 0.980
PASTORIA 0.973
CMAR 0.970
SYC CYN 0.969
MARNE 0.963
PARDEE 0.980
MOORPARK
S. CLARA
SAUGUS
PEARDS.SM
SCENICST
VINCENT 0.958
RIO HONDO
S. CLARA
MESA CAL
EAGLE ROCK
SOLID
DC LINE
DC LINE
SYLMAR S 0.961
LADWP
PASTORIA PROJECT
EDMONSTON 0.973
EDMONSTON PUMP LOAD
Edison Area Summary
Area Gen. 8121.70 MW
1674.71 MVAR
Area Load 13625.25 MW
BIG CREEK CORRIDOR
230 SYSTEM
General Electric International, Inc. PSLF Program
GENERAL ELECTRIC COMPANY
CALPINE PASTORIA ADDITION-SYSTEM IMPACT STUDY
PROPOSED IN-SERVICE DATE: JULY 2006
CASE STUDY S4 PRE-PROJECT LSP (WITH NEWOAK GENERATION)
H-1: NEW ANTELOPE-VINCENT 230 KV

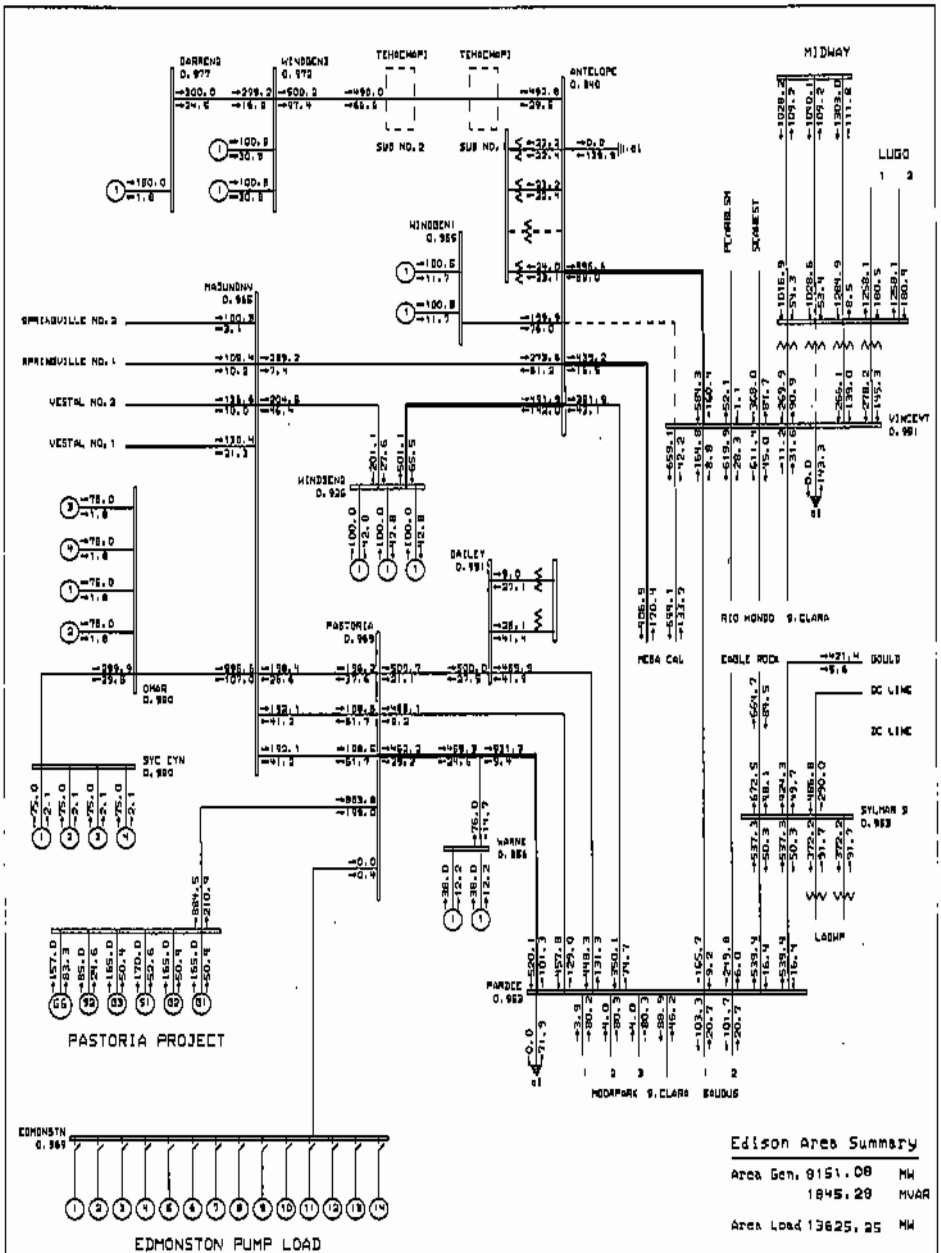
DARRENO
0.977
WINDDENI
0.972
TEHACHAPI
TEHACHAPI
ANTELOPE
0.940
MIDWAY
LUGO
SUB NO. 2
SUB NO.
WINDDENI
0.969
MASUNDAY
0.965
SPRINGVILLE NO. 2
SPRINGVILLE NO. 1
VESTAL NO. 2
VESTAL NO. 1
WINDDENO
0.926
BAILEY
0.991
PASTORIA
0.969
OMAR
0.980
SYC CYN
0.980
WARNE
0.986
MANDCE
0.983
MOORPARK
S.CLARA
EOUDUS
PCHERLSN
SCHMEST
VINCENT
0.991
RIO MONDO
S.CLARA
MESA CAL
EAGLE ROCK
BOULD
DC LINE
DC LINE
SYLMAR S
0.983
LADWP
PASTORIA PROJECT
EDMONSTN
0.969
EDMONSTON PUMP LOAD
Edison Area Summary
Area Gen. 9151.08 MW
1845.29 MVAR
Area Load 13625.25 MW
BIG CREEK CORRIDOR
230 SYSTEM
General Electric International, Inc. PSLF Program
GENERAL ELECTRIC COMPANY
CALPINE PASTORIA ADDITION- SYSTEM IMPACT STUDY
PROPOSED IN SERVICE DATE: JULY 2006
CASE STUDY G: POST-PROJECT LSP (WITH VENTURA GENERATION)
H-1: NEW ANTELOPE-VINCENT 230 KV

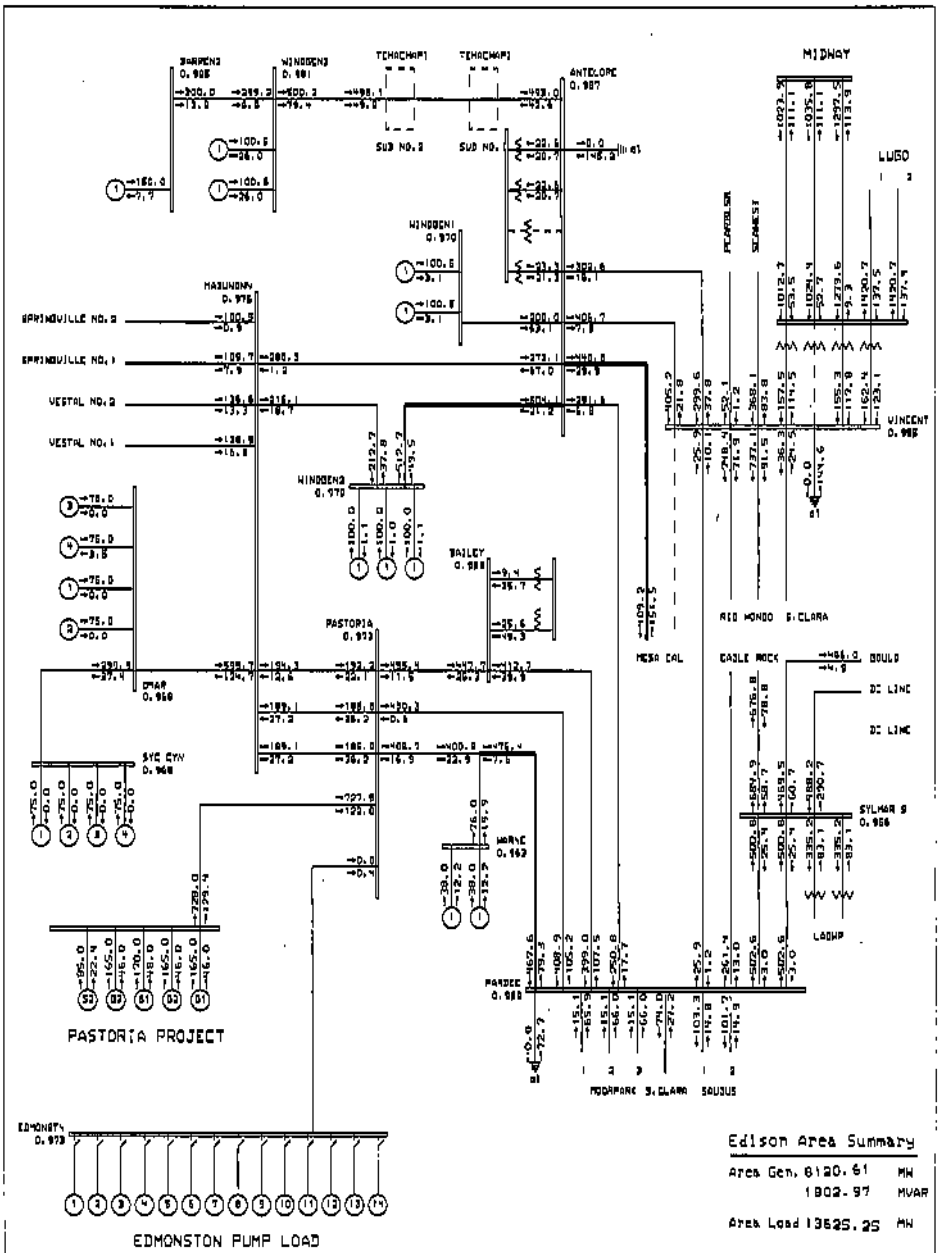
BARRENS
WINDGEN3
TEHACHAPI
ANTELOPE
MIDWAY
LUGO
SUB NO. 2
SUB NO.
WINDGEN1
MASONRY
SPRINGVILLE NO. 2
SPRINGVILLE NO. 1
VESTAL NO. 2
VESTAL NO. 1
WINDGEN2
BAILEY
PASTORIA
DMAR
SYE CYN
MORNE
PEARDEE
EDMONSTON
PEARLSON
SEAWEST
VINCENT
RIO HONDO
S.CLARA
MESA CAL
EAGLE ROCK
BOULD
DC LINE
DC LINE
SYLMAR S
LADWP
MOORPARK
S.CLARA
SOUSUS
PASTORIA PROJECT
EDMONSTON PUMP LOAD
Edison Area Summary
Area Gen. 8120.61 MW
1902.97 MVAR
Area Load 13625.25 MW
BIG CREEK CORRIDOR
230 SYSTEM
General Electric International, Inc. PSLF Program
GENERAL ELECTRIC COMPANY
DALPINE PASTORIA ADDITION-SYSTEM IMPACT STUDY
PROPOSED IN-SERVICE DATE: JULY 2006
CASE STUDY 5: PRE-PROJECT LSP (WITH VENTURA GENERATION)
H-33 MESA-VINCENT 230 KV

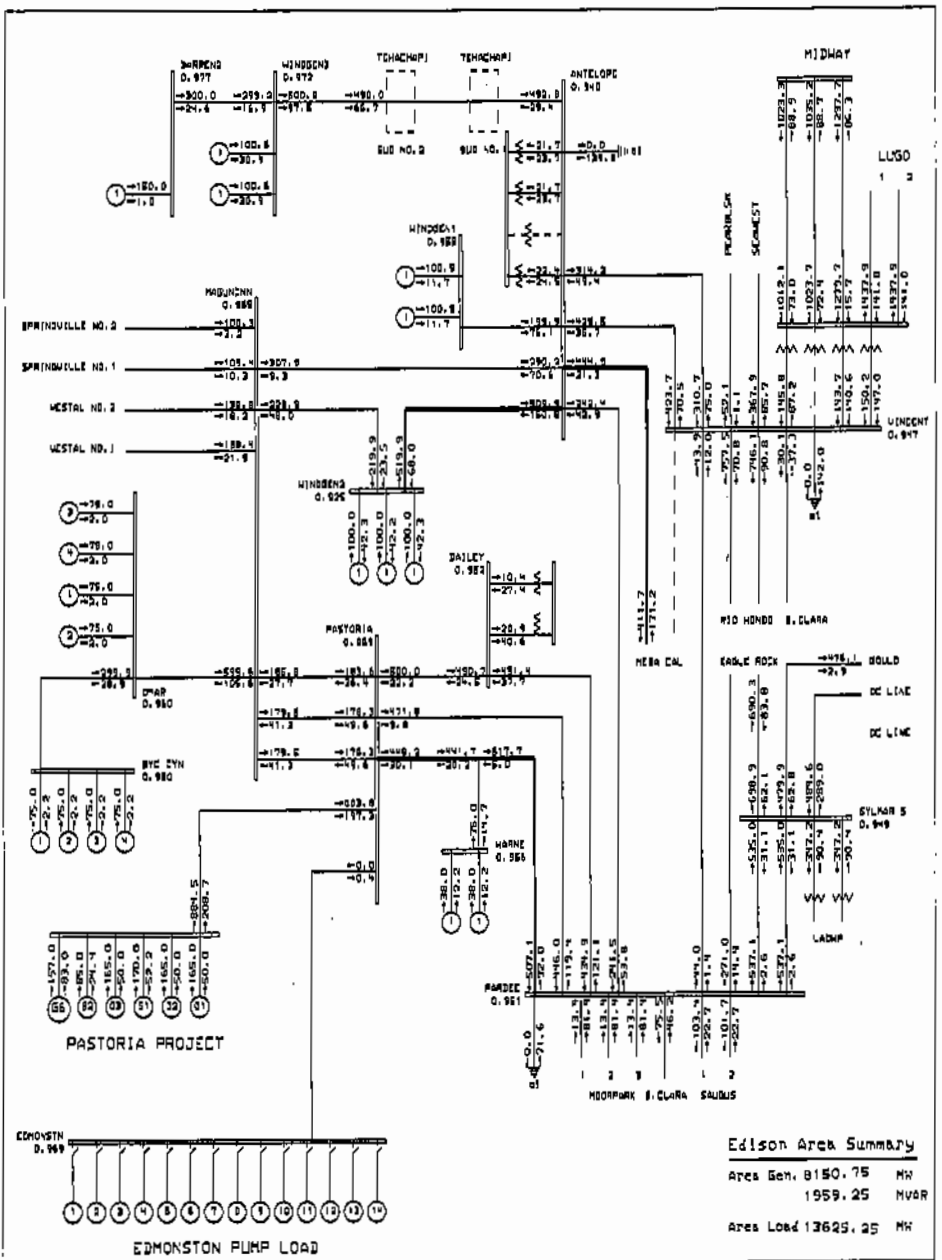
MIDWAY
LUGO
VINCENT
MESA CAL
EAGLE ROCK
GOULD
DC LINE
DC LINE
SYLMAR 5
LADWP
RIO HONDO
S.CLARA
MOORPARK
S.CLARA
SAUGUS
PARDEE
HARNE
PASTORIA
WINDGEN
TEHACHAPI
ANTELOPE
SUB NO.2
SUB NO.1
SPRINGVILLE NO.2
SPRINGVILLE NO.1
WESTAL NO.2
WESTAL NO.1
DAILEY
CMAR
BYE SYN
PASTORIA PROJECT
EDMONSTN
EDMONSTON PUMP LOAD
Edison Area Summary
Area Gen. 8150.75 MW
1959.25 MVAR
Area Load 13625.25 MW
BIG CREEK CORRIDOR
230 SYSTEM
GENERAL ELECTRIC COMPANY
COLPINE PASTORIA ADDITION- SYSTEM IMPACT STUDY
PROPOSED IN SERVICE DATE: JULY 2006
CASE STUDY 5: POST-PROJECT LSF (WITH VENTURA GENERATION)
IN-1: MESA-VINCENT 230 KV

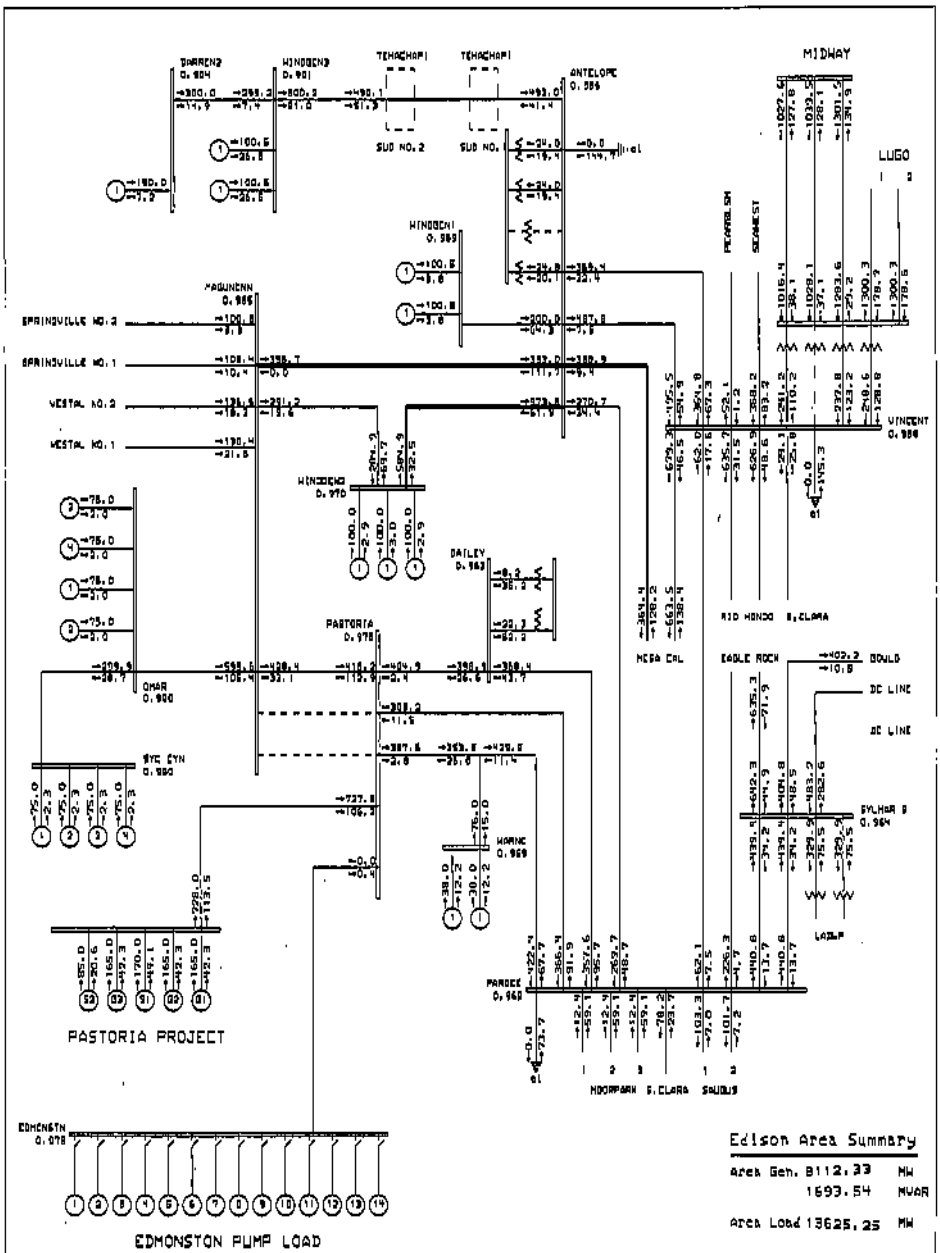
MIDWAY
LUGO
VINCENT
ANTELOPE
TEHACHAPI
SUB NO. 2
SUB NO. 1
WINDGEN2
WINDGEN3
WINDGEN1
WINDGEN4
MAGUNCNN
SPRINGVILLE NO.2
SPRINGVILLE NO.1
WESTAL NO.2
WESTAL NO.1
DAILEY
PASTORIA
OMAR
SYC CYN
MORNC
PANOCE
MOORPARK
S.CLARA
SAUGUS
MESA CAL
EAGLE ROCK
GOULD
DC LINE
SYLMAR B
LADWP
PEARSON
SEAMEST
RIO HONDO
EDMONSTN
PASTORIA PROJECT
EDMONSTON PUMP LOAD
Edison Area Summary
Area Gen. 8112.33 MW
1693.54 MVAR
Area Load 13625.25 MW
BIG CREEK CORRIDOR
230 SYSTEM
General Electric International, Inc. PSLF Program
GENERAL ELECTRIC COMPANY
CALPINE PASTORIA ADDITION-SYSTEM IMPACT STUDY
PROPOSED IN-SERVICE DATE: JULY 2006
CASE STUDY 5: PRE-PROJECT LSP WITH VENTURA GENERATION
N-2: MAGUNCN-PASTORIA NO.1 230 KV
MAGUNCN-PASTORIA NO.2 230 KV

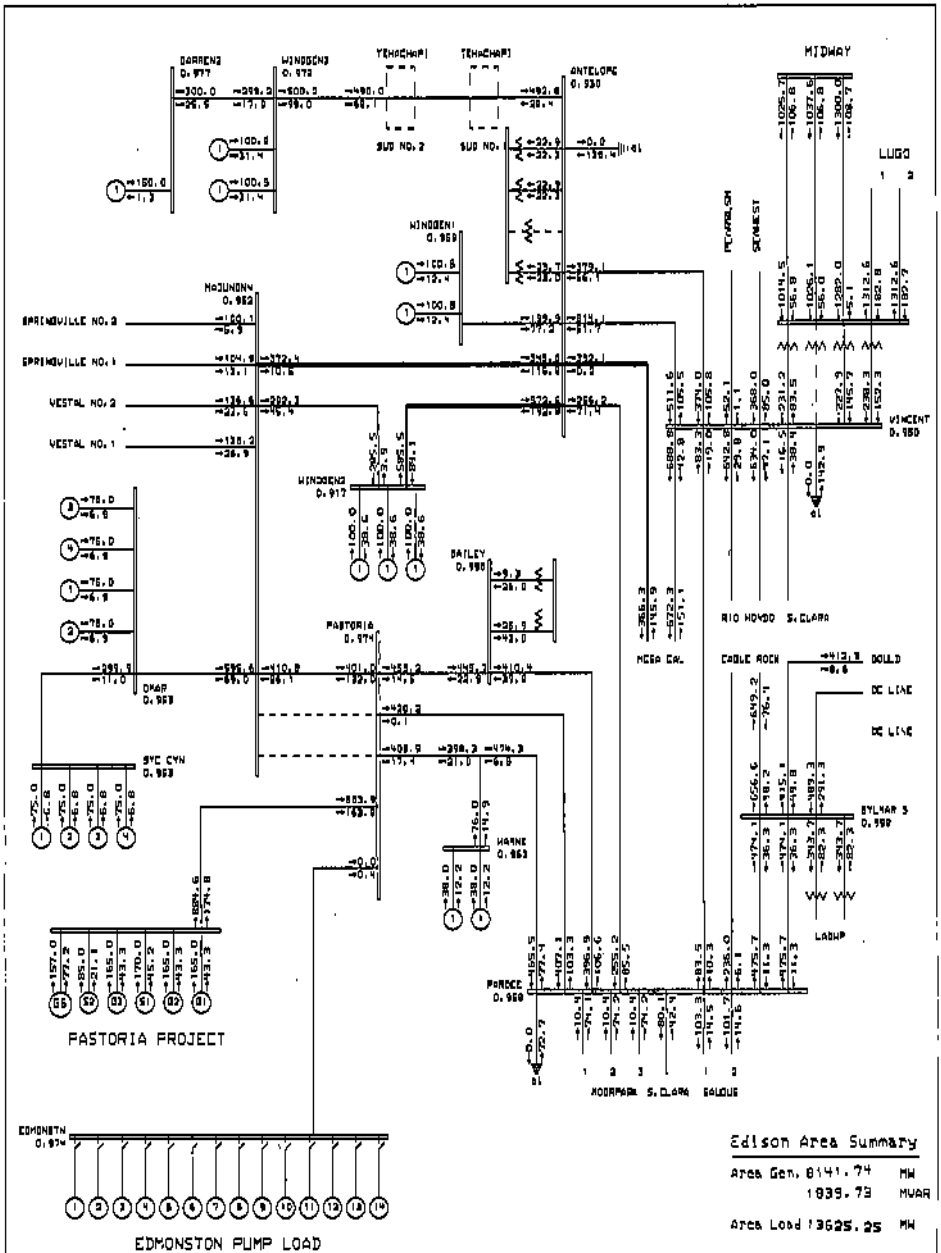
DARRENS
WINDGEN3
YEHACHAPI
TEHACHAPI
ANTELOPE
MIDWAY
LUGO
SUB NO. 2
SUB NO. 1
WINDGEN1
MOJUNDNV
SPRINGVILLE NO. 2
SPRINGVILLE NO. 1
VESTAL NO. 2
VESTAL NO. 1
WINDGEN2
BAILEY
PASTORIA
OMAR
SYC CYN
WARNE
FORECE
MOORPARK
S. CLARA
GALOUS
MCARTHUR
SCENIC
VINCENT
RIO HONDO
S. CLARA
MESA CA.
CABLE ROCK
BOULD
DC LINE
DC LINE
SYLMAR S
LADWP
PASTORIA PROJECT
EDMONSTN
EDMONSTON PUMP LOAD
Edison Area Summary
Area Gen. 8141.74 MW
1839.72 MVAR
Area Load 13625.25 MW
BIG CREEK CORRIDOR
230 SYSTEM
General Electric International, Inc. PSLF Program
GENERAL ELECTRIC COMPANY
DALPINE PASTORIA ADDITION- SYSTEM IMPACT STUDY
PROPOSED IN SERVICE DATE: JULY 2006
CASE STUDY 6: POST-PROJECT LSP (WITH VENTURA GENERATION)
H-2: MARUNDEN-PASTORIA NO. 1 230 KV
MARUNDEN-PASTORIA NO. 2 230 KV

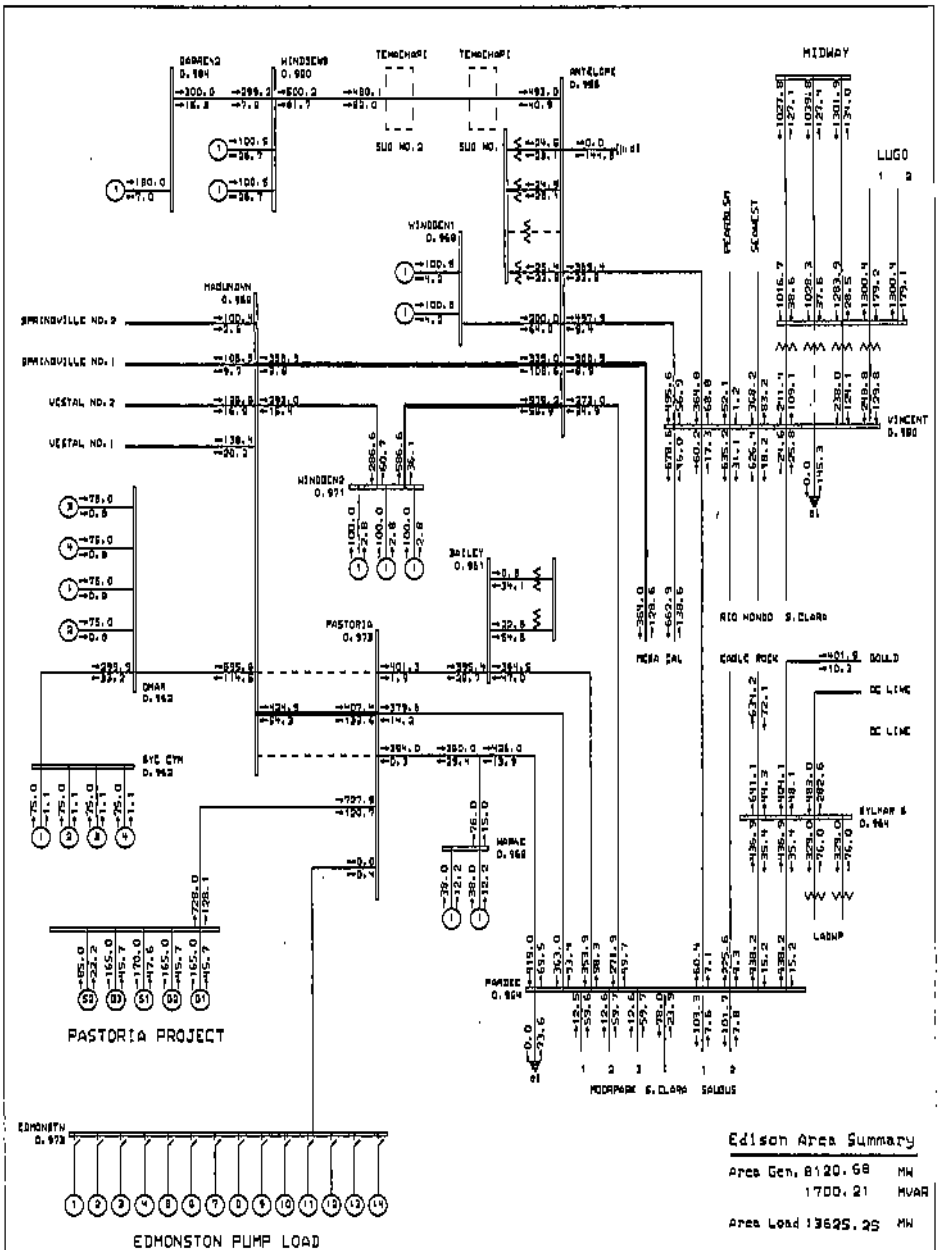

Edison Area Summary

Area Gen. 8120.68 MW
1700.21 MVAR

Area Load 13625.25 MW

BIG CREEK CORRIDOR
230 SYSTEM

General Electric International, Inc. PSLF Program

GENERAL ELECTRIC COMPANY

CALPINE PASTORIA ADDITION-SYSTEM IMPACT STUDY
PROPOSED IN-SERVICE DATE: JULY 2006
CASE STUDY 5: PRE-PROJECT LSP WITH VENTURA GENERATION

H-22 MADUNDWN-PASTORIA NO.1 230 KV
MADUNDWN-PASTORIA NO.3 230 KV

Wed May 04 13:11:43 2005

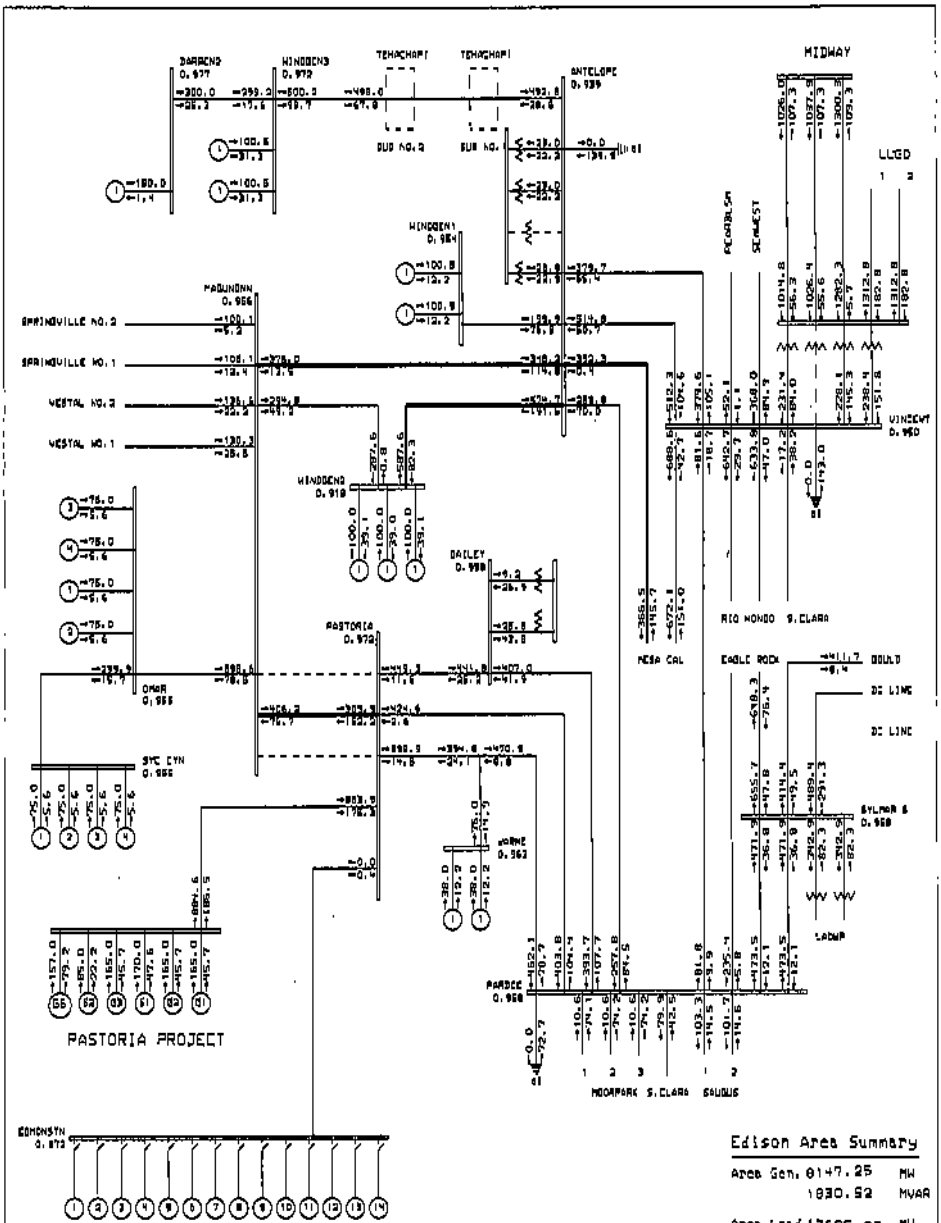
DARBEND
0.977
WINDBEN3
0.972
TEHACHAPI
TEHACHAPI
ANTELOPE
0.939
MIDWAY
LUGO
SUB NO.2
SUB NO.1
WINDBEN1
0.984
MAGUNDNN
0.966
SPRINGVILLE NO.2
SPRINGVILLE NO.1
VESTAL NO.2
VESTAL NO.1
WINDBEN2
0.919
DAILEY
0.998
PASTORIA
0.972
OMAR
0.955
SYC DYN
0.956
WORNE
0.962
PARDEE
0.958
VINCENT
0.960
RIO HONDO
S.CLARA
MESA CAL
EAGLE ROCK
GOULD
DC LINE
DC LINE
SYLMAR S
0.958
LADWP
MOORPARK
S.CLARA
SAUGUS
PASTORIA PROJECT
EDMONSYN
0.972
EDMONSTON PUMP LOAD
Edison Area Summary
Area Gen. 8147.25 MW
1830.92 MVAR
Area Load 13625.25 MW
BIG CREEK CORRIDOR
230 SYSTEM
General Electric International, Inc. PSLF Program
GENERAL ELECTRIC COMPANY
DALPINE PASTORIA ADDITION- SYSTEM IMPACT STUDY
PROPOSED IN SERVICE DATE: JULY 2006
CASE STUDY 6: POST-PROJECT LSP (WITH VENTURA GENERATION)
N-2: MAGUNDEN-PASTORIA NO.1 230 KV
MAGUNDEN-PASTORIA NO.2 230 KV

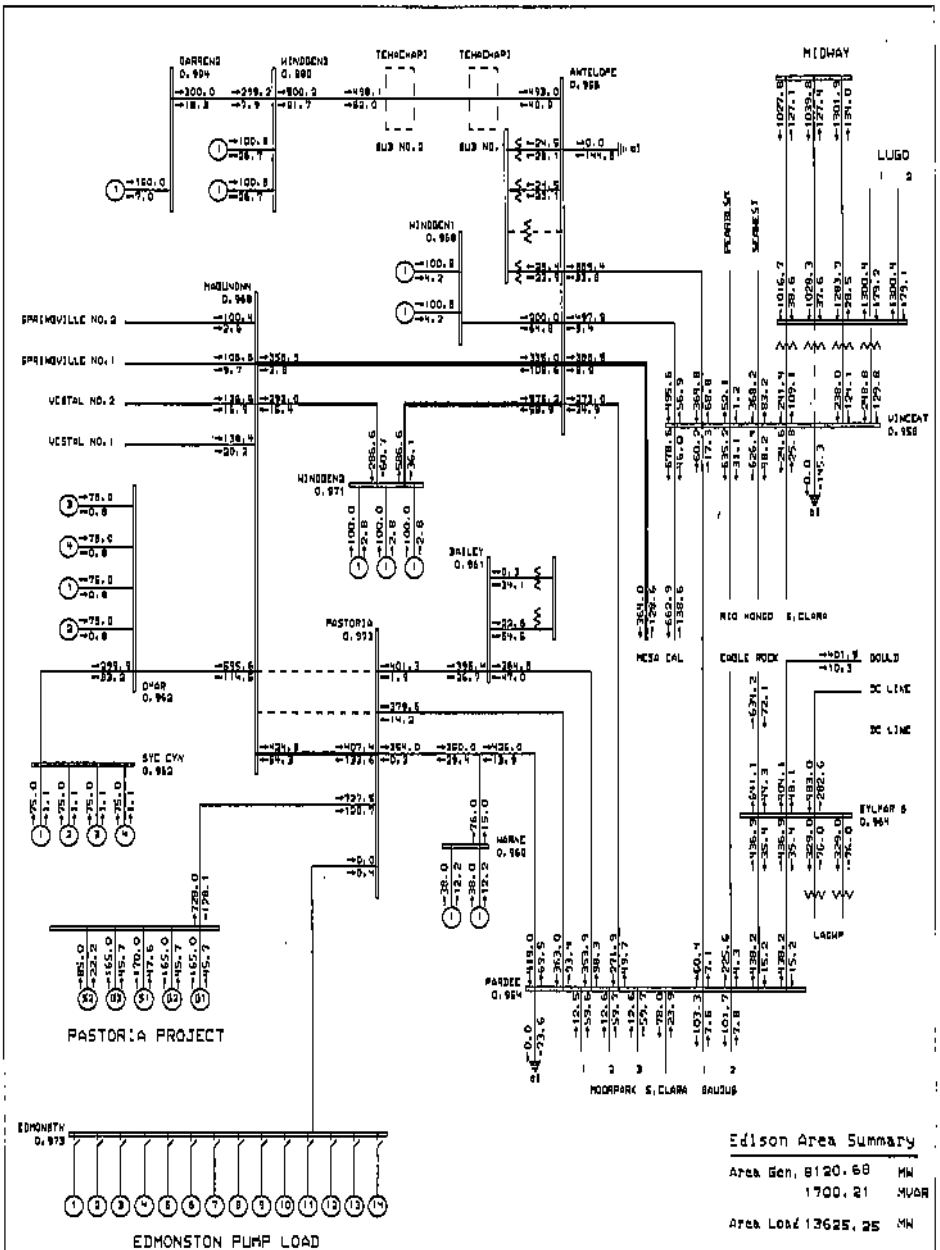
GARRENS
0.904
WINDGEN3
0.880
TEHACHAPI
TEHACHAPI
ANTELOPE
0.958
SUB NO. 2
SUB NO. 1
MIDWAY
LUGO
WINDGEN1
0.958
MAGUNDAY
0.948
SPRINGVILLE NO. 2
SPRINGVILLE NO. 1
VESTAL NO. 2
VESTAL NO. 1
PORTER SC
SERRES ST
VINCENT
0.958
WINDGEN2
0.971
BAILEY
0.961
PASTORIA
0.973
RIO HONDO
S. CLARA
MESA CAL
EAGLE ROCK
DOULD
DC LINE
DC LINE
O'HAR
0.962
SYC CYN
0.952
WARNE
0.960
EYLNAR S
0.964
LAGUN
PARDEE
0.954
MOORPARK
S. CLARA
SAUGUS
PASTORIA PROJECT
EDMONSTN
0.973
EDMONSTON PUMP LOAD
Edison Area Summary
Area Gen. 8120.68 MW
1700.21 MVAR
Area Load 13625.25 MW
BIG CREEK CORRIDOR
230 SYSTEM
General Electric International, Inc. PSLF Program
GENERAL ELECTRIC COMPANY
CALPINE PASTORIA ADDITION-SYSTEM IMPACT STUDY
PROPOSED IN-SERVICE DATE: JULY 2006
CASE STUDY S4 PRE-PROJECT LSP (WITH MENTOR GENERATION)
MAGUNDAY-PASTORIA NO. 2 230 KV
MAGUNDAY-PASTORIA NO. 3 230 KV

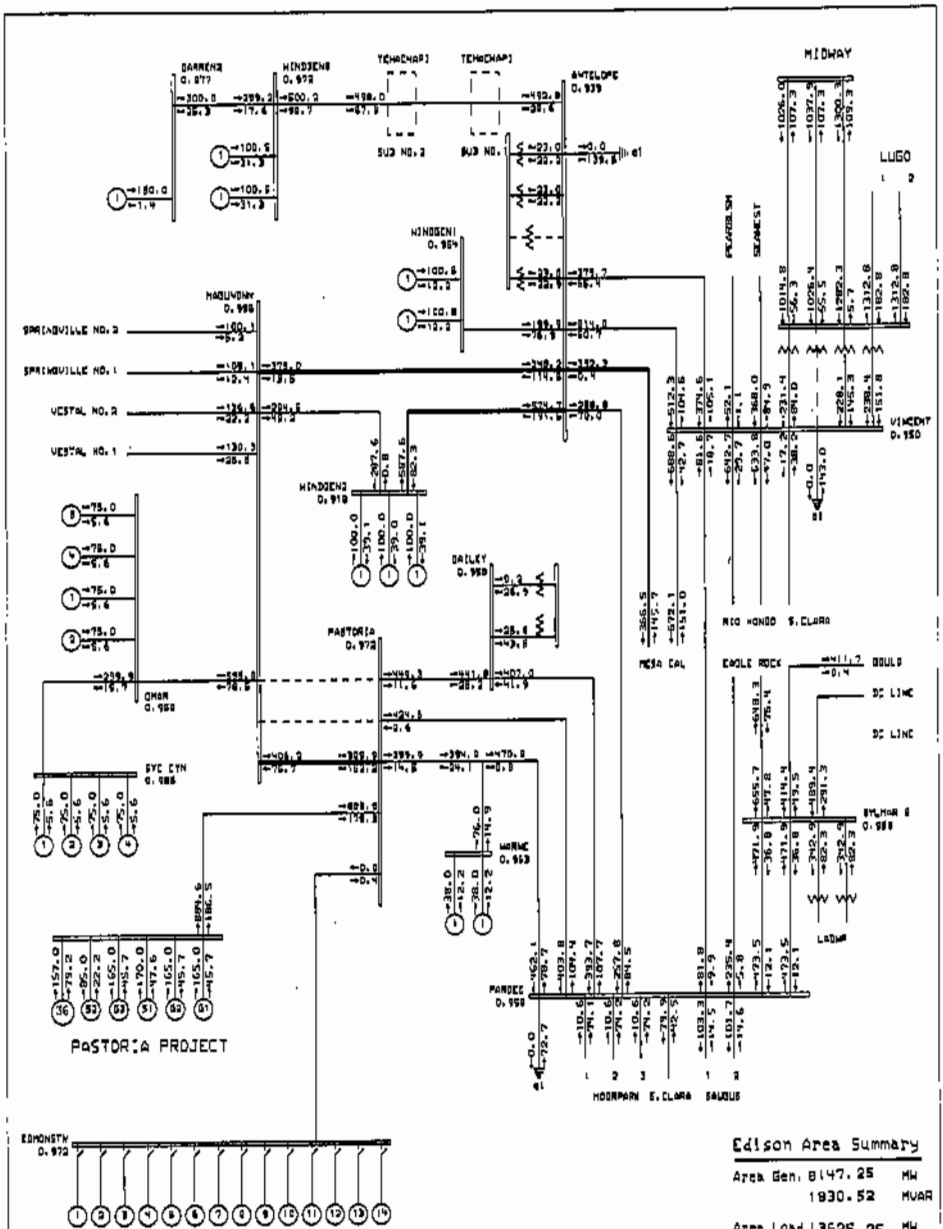
DARWIN2
WINDGEN2
TEHACHAPI
ANTELOPE
MIDWAY
LUGO
SUB NO.2
SUB NO.1
WINDGEN1
MAGUNDNY
SPRINGVILLE NO.2
SPRINGVILLE NO.1
VESTAL NO.2
VESTAL NO.1
WINDGEN3
BAILEY
PASTORIA
OMAR
SYC CYN
WRIME
MANDEE
EDMONSTN
PLACERITA
SEAWEST
VINCENT
RIO HONDO
S.CLARA
MESA CAL
EAGLE ROCK
BOULD
DC LINE
DC LINE
BYLMAR 6
LADWP
MOORPARK
S.CLARA
SAUGUS
PASTORIA PROJECT
EDMONSTN PUMP LOAD
Edison Area Summary
Area Gen. 8147.25 MW
1930.52 MVAR
Area Load 13625.25 MW
BIG CREEK CORRIDOR
230 SYSTEM
GENERAL ELECTRIC COMPANY
CALPINE PASTORIA ADDITION- SYSTEM IMPACT STUDY
PROPOSED IN SERVICE DATE: JULY 2006
CASE STUDY G: POST-PROJECT LIP (WITH VENTURA GENERATION)
H-2: MAGUNDEN-PASTORIA NO.2 230 KV
MAGUNDEN-PASTORIA NO.3 230 KV

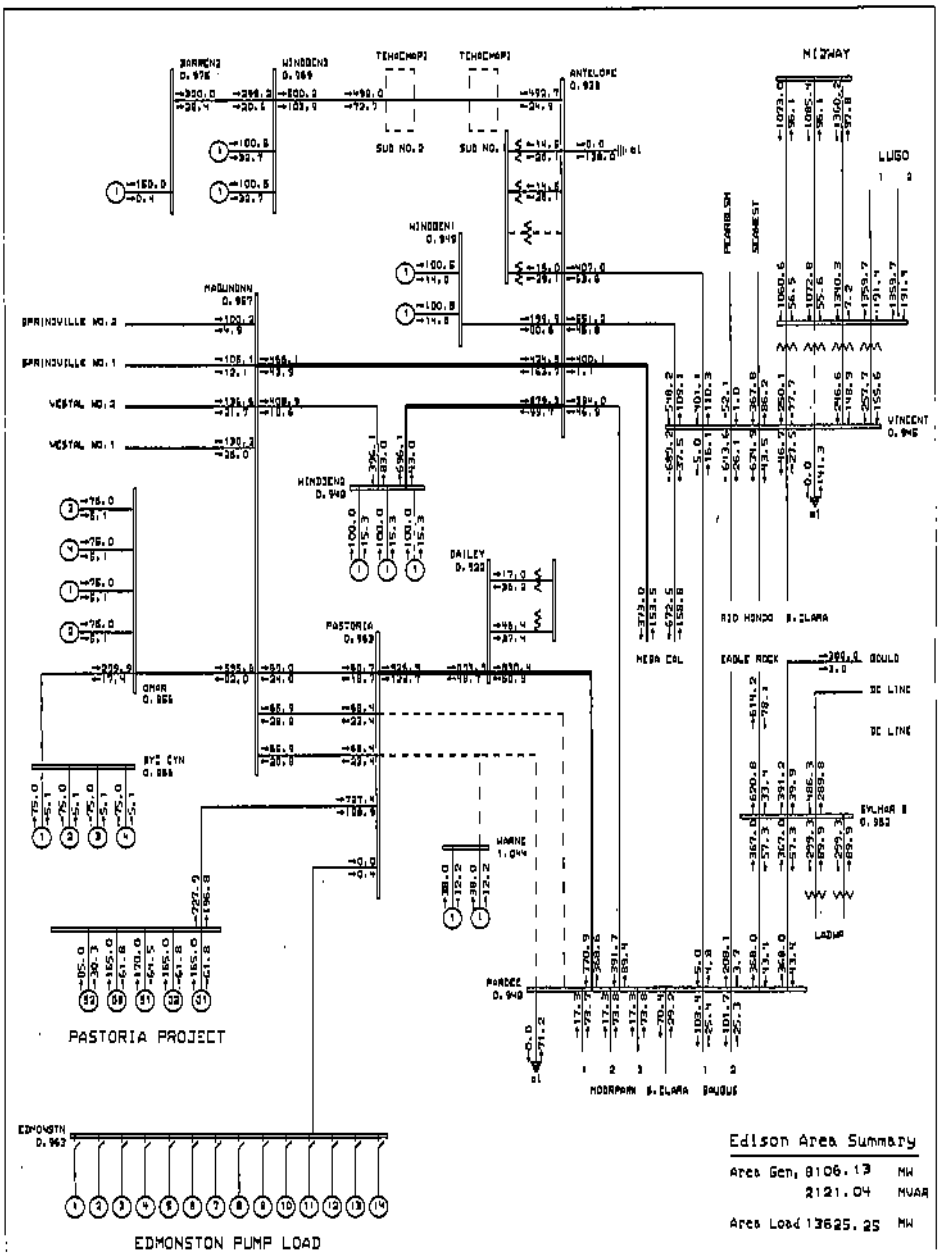
BARREN2
0.976
WINDDEN3
0.969
TEHACHAP1
TEHACHAP1
ANTELOPE
0.938
SUB NO. 2
SUB NO.
MIDWAY
LUGO
PEARBLSN
SEAWEST
WINDDEN1
0.949
MAGUNDNN
0.987
SPRINGVILLE NO. 2
SPRINGVILLE NO. 1
VESTAL NO. 2
VESTAL NO. 1
VINCENT
0.946
WINDDEN2
0.949
DAILEY
0.933
PASTORIA
0.963
RID HONDO
S.CLARA
MESA COL
EAGLE ROCK
GOULD
DC LINE
DC LINE
OMAR
0.955
BYE CYN
0.954
EVLHAR 2
0.952
LADWP
WARNE
1.044
PARDEE
0.949
MOORPARK
S.CLARA
BAYUGS
EDMONSTN
0.962
PASTORIA PROJECT
EDMONSTON PUMP LOAD
Edison Area Summary
Area Gen, 8106.13 MW
2121.04 MVAR
Area Load 13625.25 MW
BIG CREEK CORRIDOR
230 SYSTEM
General Electric International, Inc. PSLF Program
GENERAL ELECTRIC COMPANY
CALPINE PASTORIA ADDITION-SYSTEM IMPACT STUDY
PROPOSED IN-SERVICE DATE: JULY 2006
CASE STUDY 5: PRE-PROJECT LSP (WITH VENTURA GENERATION)
N-2: PARDEE-PASTORIA 230 KV
PARDEE-PASTORIA-WARNE 230 KV

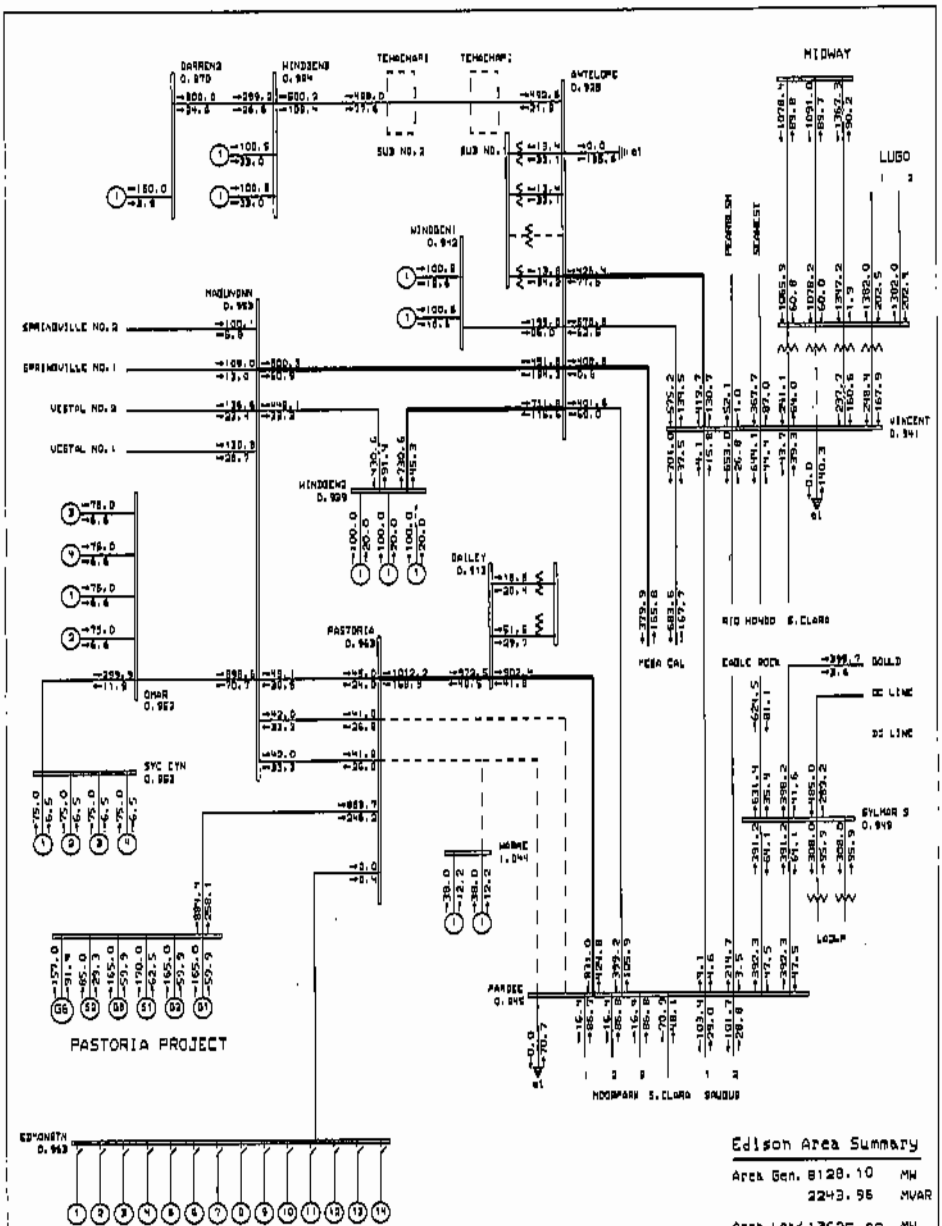
DARRENS
WINDGENS
TEHACHAPI
TEHACHAPI
ANTELOPE
MIDWAY
LUGO
SUB NO. 2
SUB NO. 1
WINDGEN1
MAGUNDNN
SPRINGVILLE NO. 2
SPRINGVILLE NO. 1
VESTAL NO. 2
VESTAL NO. 1
WINDGEN3
DAILEY
PASTORIA
OMAR
SYC CYN
MOHAVE
PARDEE
EDMONSTN
PEARBLSM
SCHAEST
VINCENT
RIO HONDO
S.CLARA
MESA CAL
EAGLE ROCK
BOULD
DC LINE
DC LINE
SYLMAR S
LOZAN
MOORPARK
S.CLARA
SAUGUS
PASTORIA PROJECT
EDMONSTON PUMP LOAD
Edison Area Summary
Area Gen. 8128.10 MW
2243.95 MVAR
Area Load 13625.25 MW
BIG CREEK CORRIDOR
230 SYSTEM
General Electric International, Inc. PSLF Program
GENERAL ELECTRIC COMPANY
CALPINE PASTORIA ADDITION: SYSTEM IMPACT STUDY
PROPOSED IN SERVICE DATE: JULY 2006
CASE STUDY 6: POST-PROJECT LSP (WITH VENTURA GENERATION)
N-2: PARDEE-PASTORIA 230 KV
PARDEE-PASTORIA-MOHAVE 230 KV

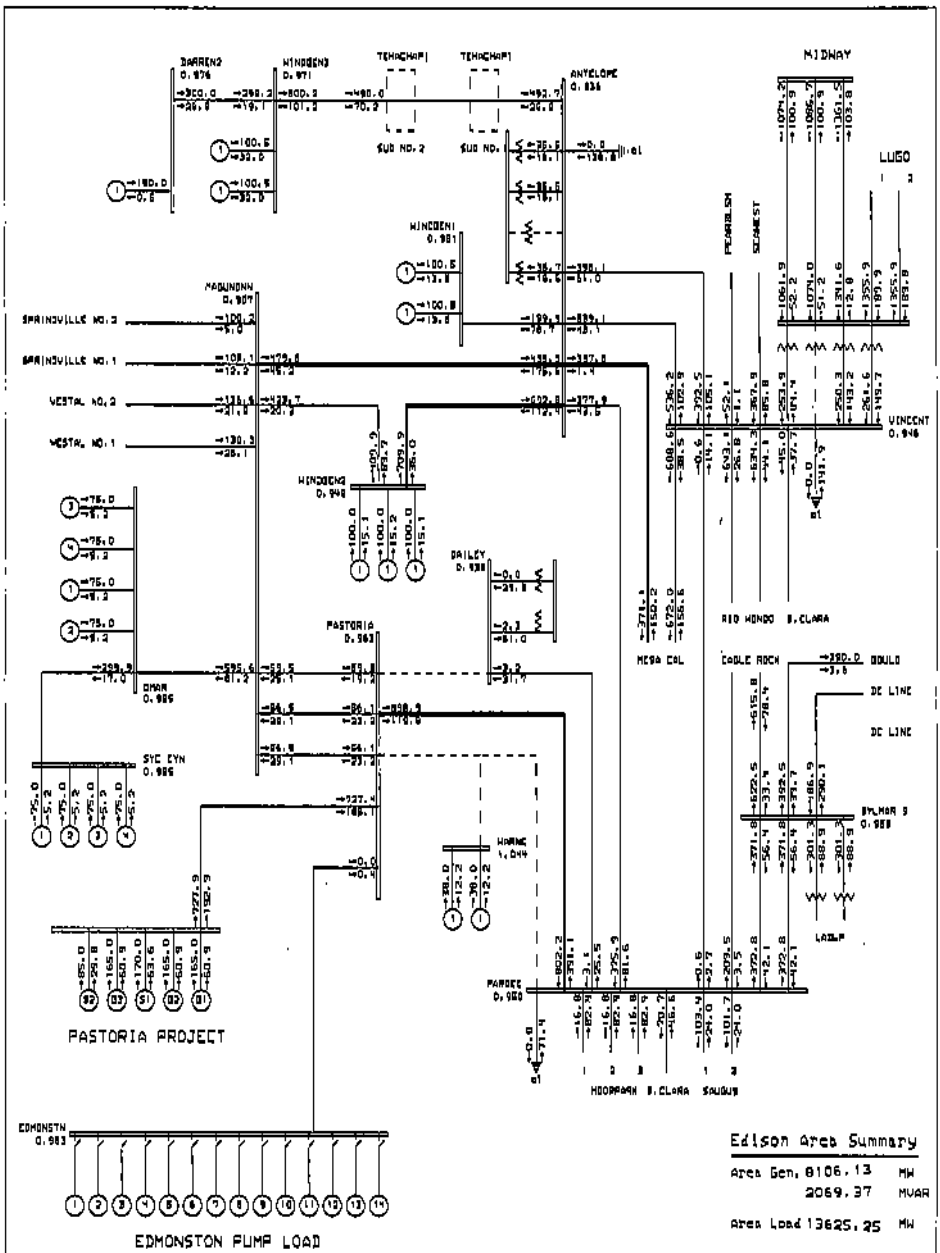

Edison Area Summary

Area Gen. 8106.13 MW
2069.37 MVAR

Area Load 13625.25 MW

BIG CREEK CORRIDOR
230 SYSTEM

General Electric International, Inc. PSLF Program

GENERAL ELECTRIC COMPANY

CALPINE PASTORIA ADDITION-SYSTEM IMPACT STUDY
PROPOSED IN-SERVICE DATE: JULY 2006
CASE STUDY S1 PRE-PROJECT LSP (WITH VENTURA GENERATION)

K-21 DAILEY-PASTORIA 230 KV
PARDEE-PASTORIA-WARNE 230 KV

Rating = 1

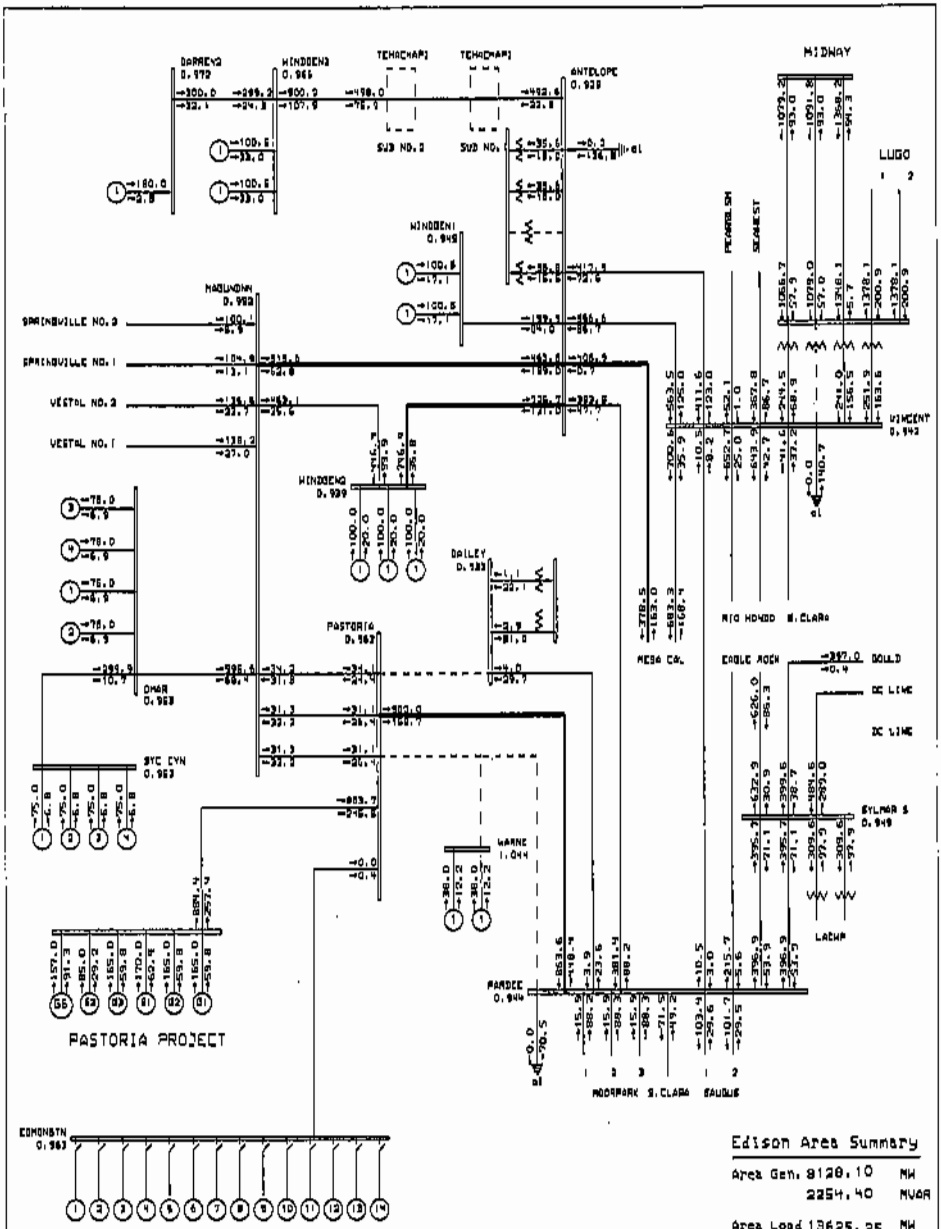
DARREYD
0.972
WINDDEN3
0.965
TEHACHAP1
TEHACHAP1
ANTELOPE
0.939
SUB NO. 2
SUB NO. 1
MIDWAY
LUGO
WINDDEN1
0.942
MADLUNDN
0.992
SPRINGVILLE NO. 2
SPRINGVILLE NO. 1
VESTAL NO. 2
VESTAL NO. 1
WINDDEN4
0.939
DALLEY
0.933
PASTORIA
0.962
DMAR
0.963
SYC CYN
0.963
WARNE
1.044
PARDEE
0.944
MOORPARK
S.CLARA
SAUGUS
MEGA CO.
EAGLE ROCK
BOULD
DC LINE
DC LINE
SYLMAR S
0.949
LADWP
PASTORIA PROJECT
EDMONSTN
0.963
EDMONSTON PUMP LOAD
Edison Area Summary
Area Gen. 8128.10 MW
2254.40 MVAR
Area Load 13625.25 MW
BIG CREEK CORRIDOR
230 SYSTEM
General Electric International, Inc. PSA/ Program
GENERAL ELECTRIC COMPANY
DALPINE PASTORIA ADDITION- SYSTEM IMPACT STUDY
PROPOSED IN SERVICE DATE: JULY 2005
CASE STUDY G: POST-PROJECT LSP (WITH VENTURA EXPORTATION)
H-21 DALLEY-PASTORIA 230 KV
PARDEE-PASTORIA-WARNE 230 KV
Rating = 1

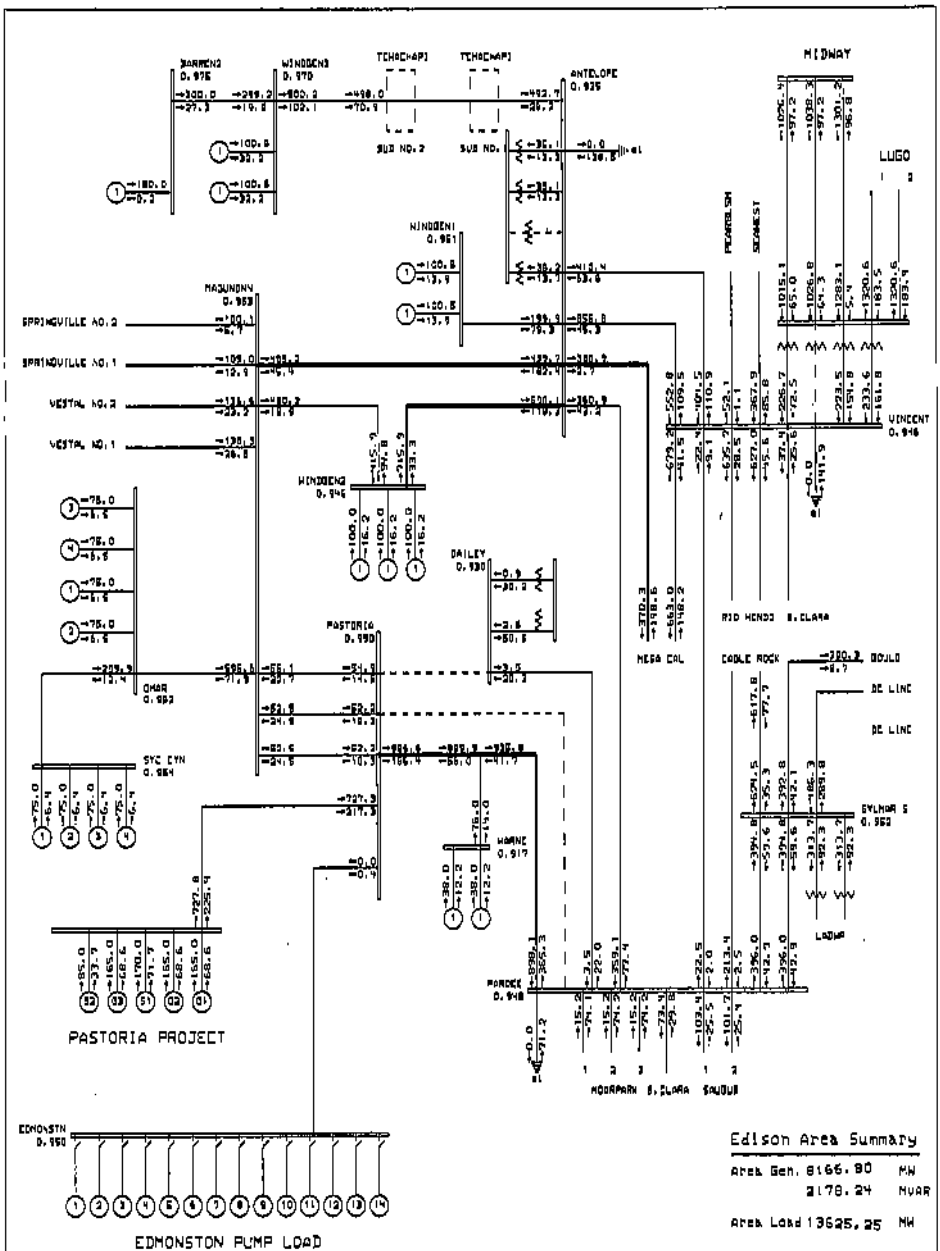

Edison Area Summary

Area Gen. 8166.80 MW
2178.24 MVAR

Area Load 13625.25 MW

BIG CREEK CORRIDOR

230 SYSTEM

General Electric International, Inc. PSLF Program

GENERAL ELECTRIC COMPANY

CALPINE PASTORIA ACCI1104-SYSTEM IMPACT STUDY
PROPOSED IN-SERVICE DATE: JULY 2006
CASE STUDY S: PDC-PROJECT LSP (WITH MENTORA GENERATION)

H-22 BAILEY-PASTORIA 230 KV
PARDEE-PASTORIA 230 KV

c:\wpsi\131\calpine\el expand
c:\wpsi\131\calpine\el expand
Rating = 1

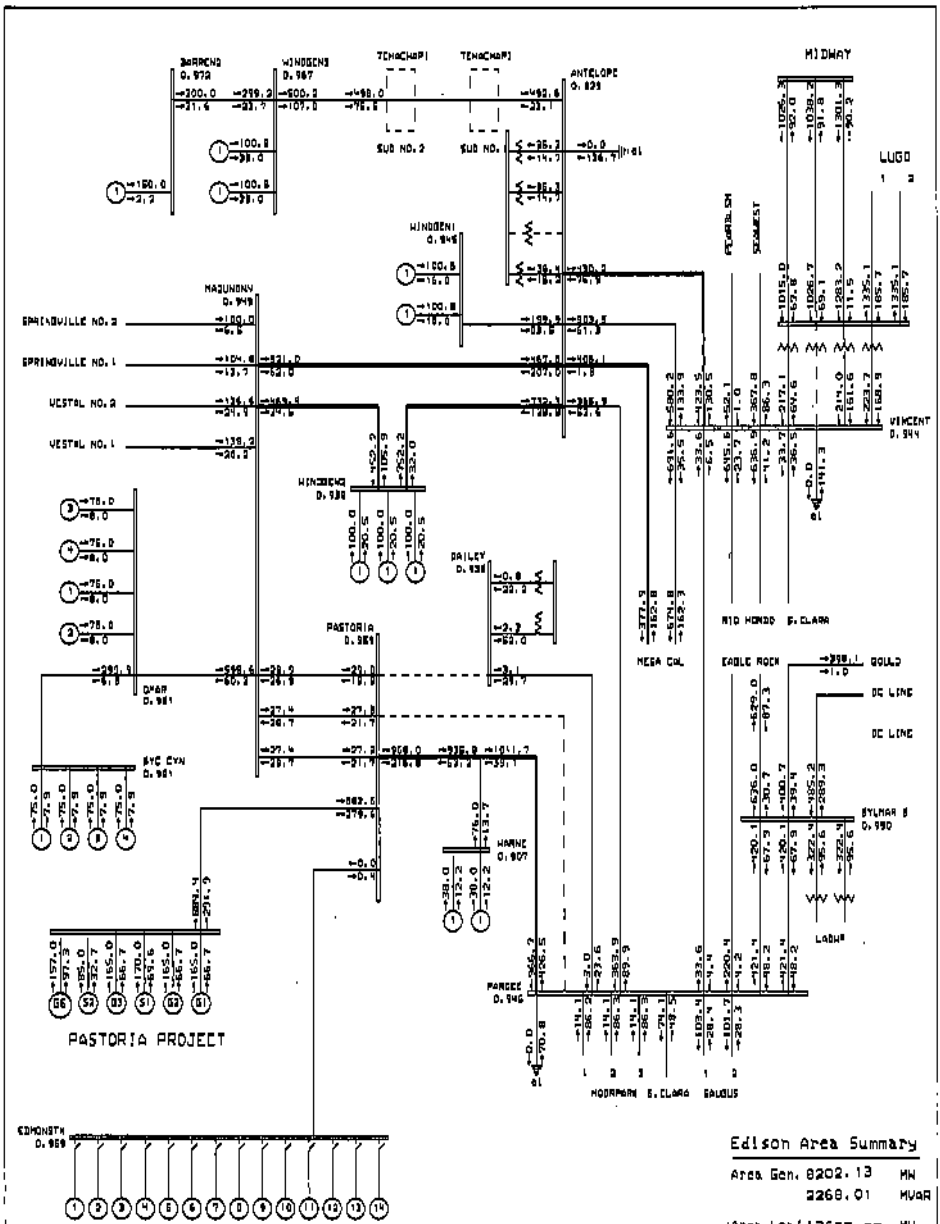

Edison Area Summary

Area Gen. 8202.13 MW
2268.01 MVAR

Area Load 13625.25 MW

BIG CREEK CORRIDOR

230 SYSTEM

General Electric International, Inc. PSLF Program

GENERAL ELECTRIC COMPANY

CALPINE PASTORIA ADDITION- SYSTEM IMPACT STUDY
PROPOSED IN SERVICE DATE: JULY 2006
CASE STUDY E: POST-PROJECT 6SP (WITH VENTURA GENERATION)

N-2: BAILEY-PASTORIA 230 KV
PARDEE-PASTORIA 230 KV

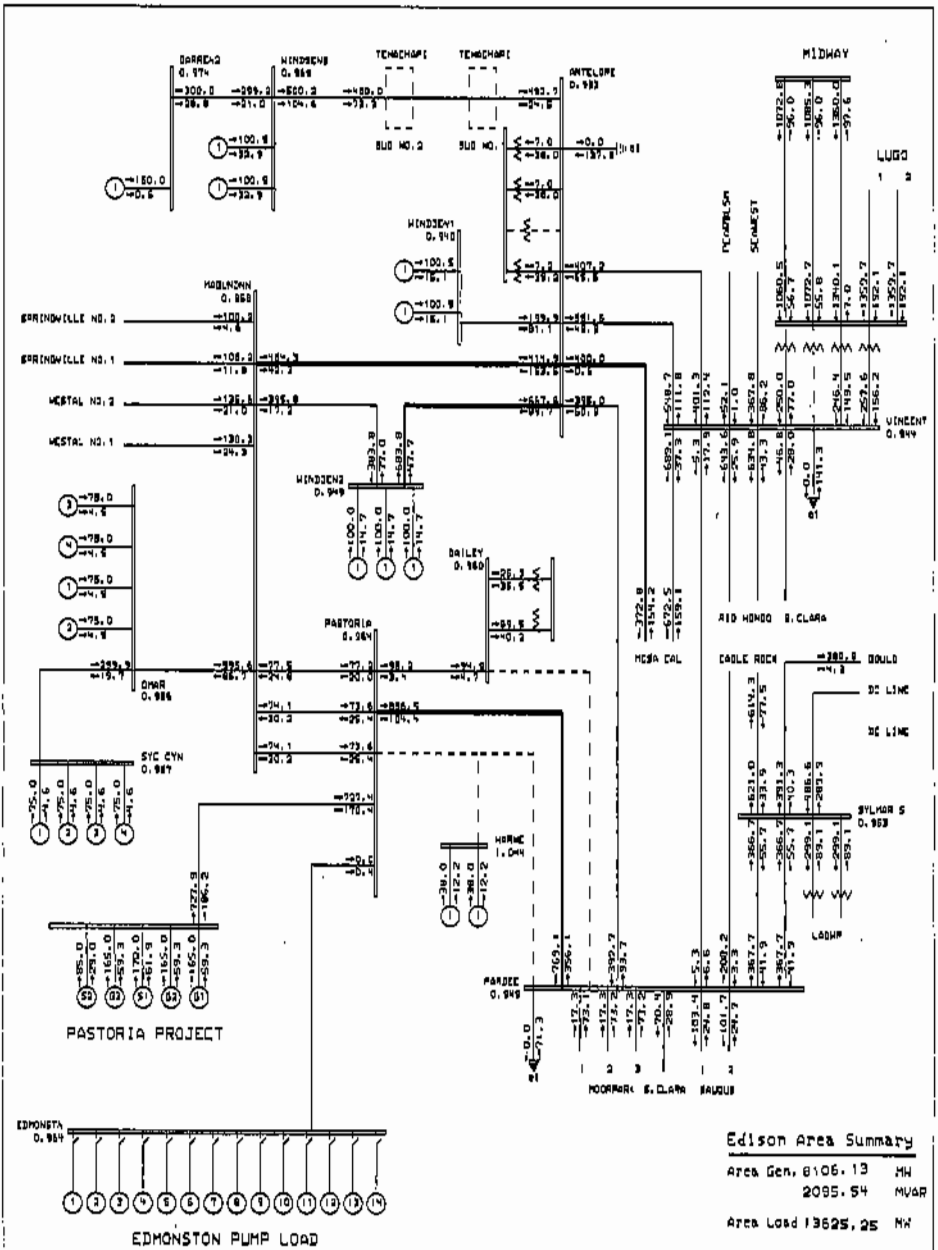
DARREL2
0.974
WINDSEW8
0.969
TEHACHAP1
TEHACHAP1
ANTELOPE
0.933
MIDWAY
LUGO
SUB NO.2
SUB NO.1
WINDSEW1
0.940
MOBLINOWN
0.958
SPRINGVILLE NO.2
SPRINGVILLE NO.1
WESTAL NO.2
WESTAL NO.1
WINDSEW2
0.949
DAILEY
0.960
PASTORIA
0.964
OMAR
0.986
SYC CYN
0.987
HERNE
1.044
PARDEE
0.949
EDMONSTA
0.954
VINCENT
0.944
RIO HONDO
S.CLARA
MESA CAL
EAGLE ROCK
GOULD
DC LINE
DC LINE
SYLMAR S
0.953
LADWP
MOORPARK
S.CLARA
SAUGUS
PASTORIA PROJECT
EDMONSTON PUMP LOAD
Edison Area Summary
Area Gen. 8106.13 MW
2095.54 MVAR
Area Load 13625.25 MW
BIG CREEK CORRIDOR
230 SYSTEM
General Electric International, Inc. PSLF Program
GENERAL ELECTRIC COMPANY
CALPINE PASTORIA ADDITION-SYSTEM IMPACT STUDY
PROPOSED IN-SERVICE DATE: JUN 2006
CASE STUDY 5: PRE-PROJECT LSP (WITH NEWPORT GENERATION)
N-2: DAILEY-PARDEE 230 KV
PARDEE-PASTORIA-HERNE 230 KV

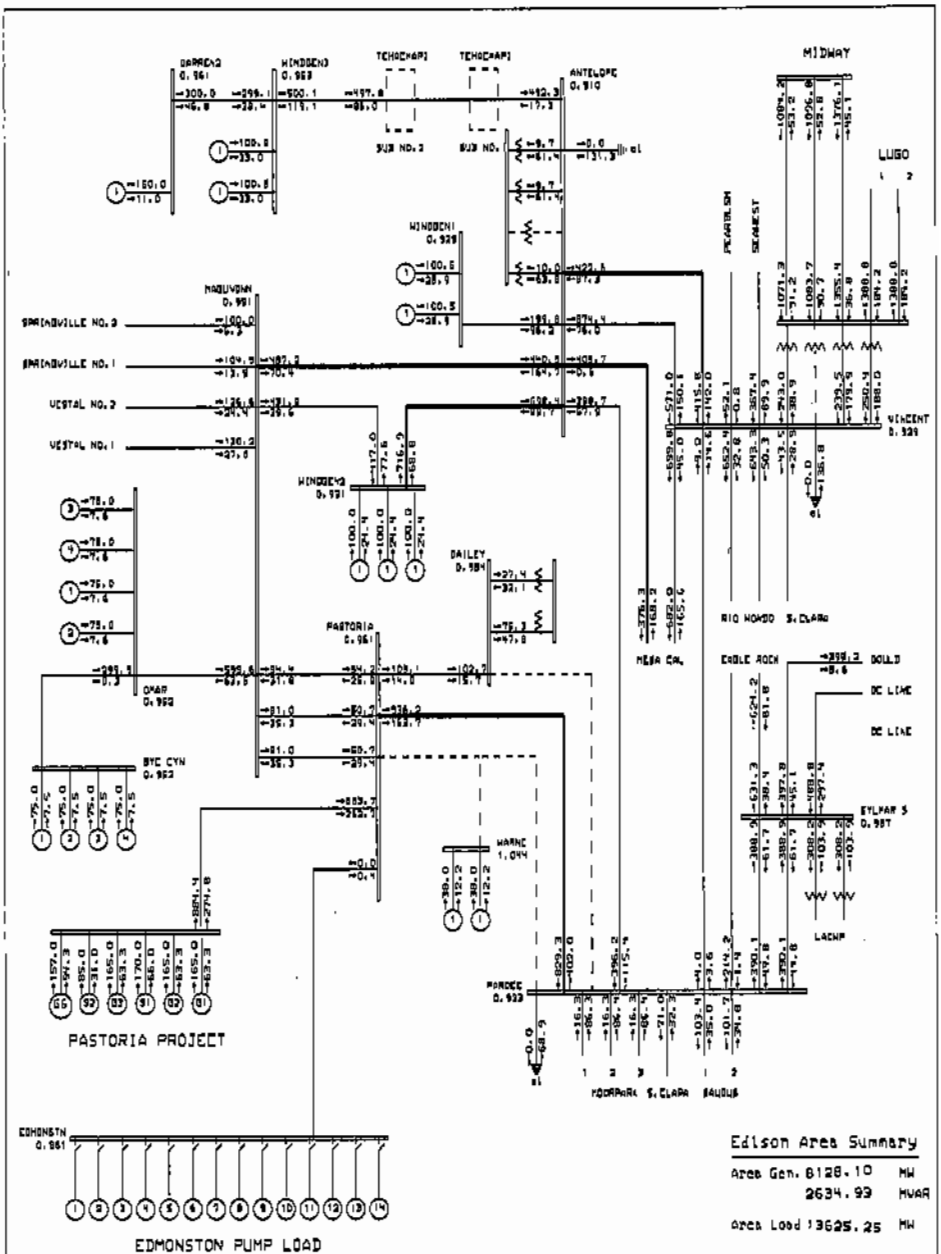
BARREA2
0.961
WINDCEN3
0.969
TEHACHAP1
TEHACHAP1
ANTELOPE
0.910
MIDWAY
SUB NO. 2
SUB NO.
LUGO
WINDCEN1
0.929
PEARLSN
SKAMEST
MADUVDN
0.991
SPRINGVILLE NO. 2
SPRINGVILLE NO. 1
VESTAL NO. 2
VESTAL NO. 1
VINCENT
0.929
WINDCEN2
0.931
DAILEY
0.984
PASTORIA
0.961
RIO HONDO
S. CLARA
MESA CAL
EAGLE ROCK
BOULD
DC LINE
DC LINE
OMAR
0.992
BYE CYN
0.992
EYLPAR S
0.987
WARNE
1.044
LACHP
PARDEC
0.922
PARDEC
S. CLARA
BAUDIS
PASTORIA PROJECT
EDMONSTN
0.961
EDMONSTON PUMP LOAD
Edison Area Summary
Area Gen. 8128.10 MW
2634.93 MVAR
Area Load 13625.25 MW
BIG CREEK CORRIDOR
230 SYSTEM
General Electric International, Inc. PSLF Program
GENERAL ELECTRIC COMPANY
CALPINE PASTORIA ADDITION- SYSTEM IMPACT STUDY
PROPOSED IN SERVICE DATE: JULY 2006
CASE STUDY 6: POST-PROJECT LSP (WITH VENTURA GENERATION)
W-2: DAILEY-PARDEC 230 KV
PARDEC-PASTORIA-WARNE 230 KV

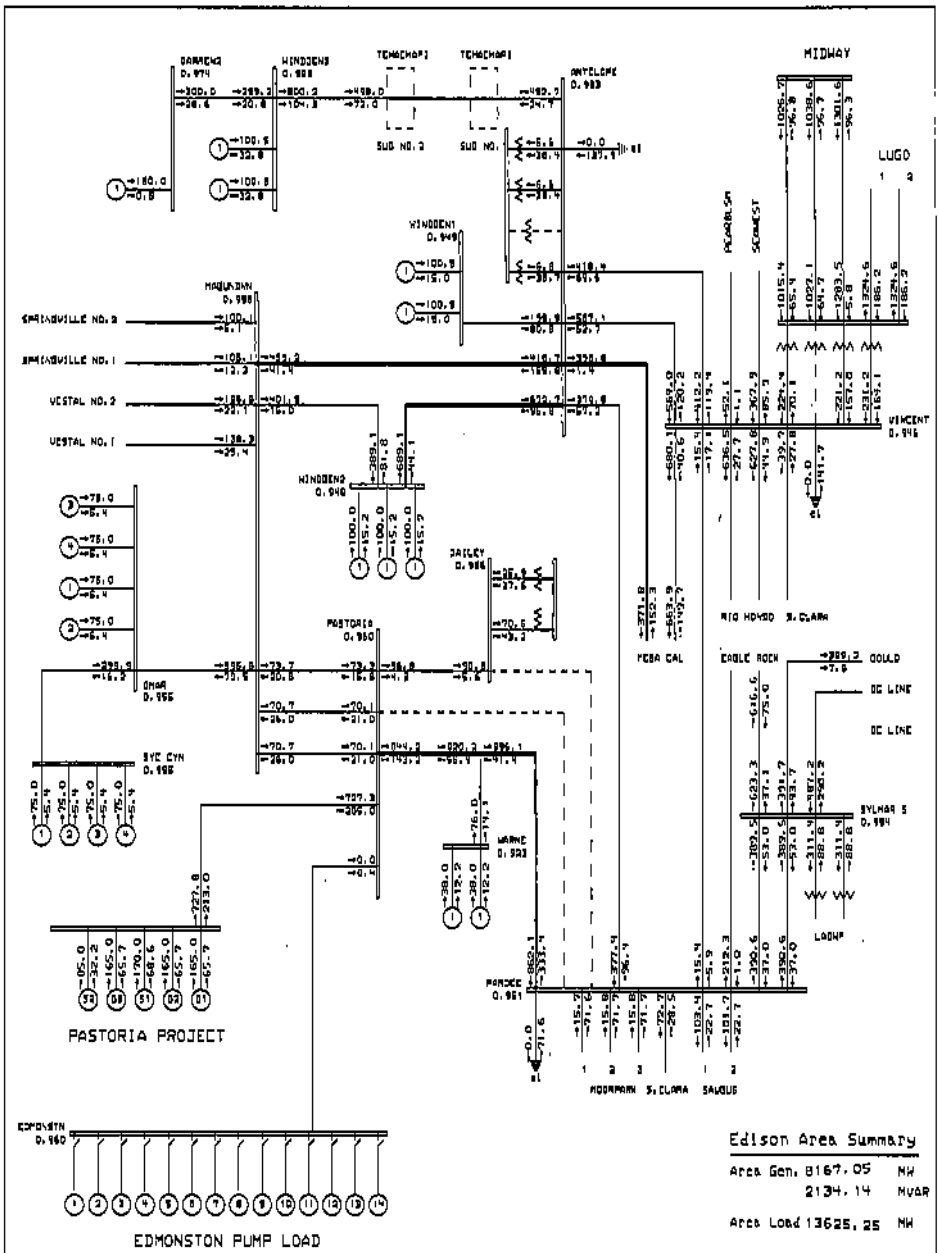

Edison Area Summary

Area Gen. 8167.05 MW
2134.14 MVAR

Area Load 13625.25 MW

DIG CREEK CORRIDOR

230 SYSTEM

RAJMAR Wed May 04 13:33:20 2005

General Electric International, Inc. PSLF Program

GENERAL ELECTRIC COMPANY

CALPINE PASTORIA ADDITION-SYSTEM IMPACT STUDY
PROPOSED IN-SERVICE DATE: JULY 2005
CASE STUDY S1 PRE-PROJECT LSP (WITH VENTURA GENERATION)

W-2: BAILEY-PARDEE 230 KV
PARDEE-PASTORIA 230 KV

c:\pslf\fltlvca\pfnetwpf expand
c:\pslf\fltlvca\pfnetwpf expand
Rating = 1

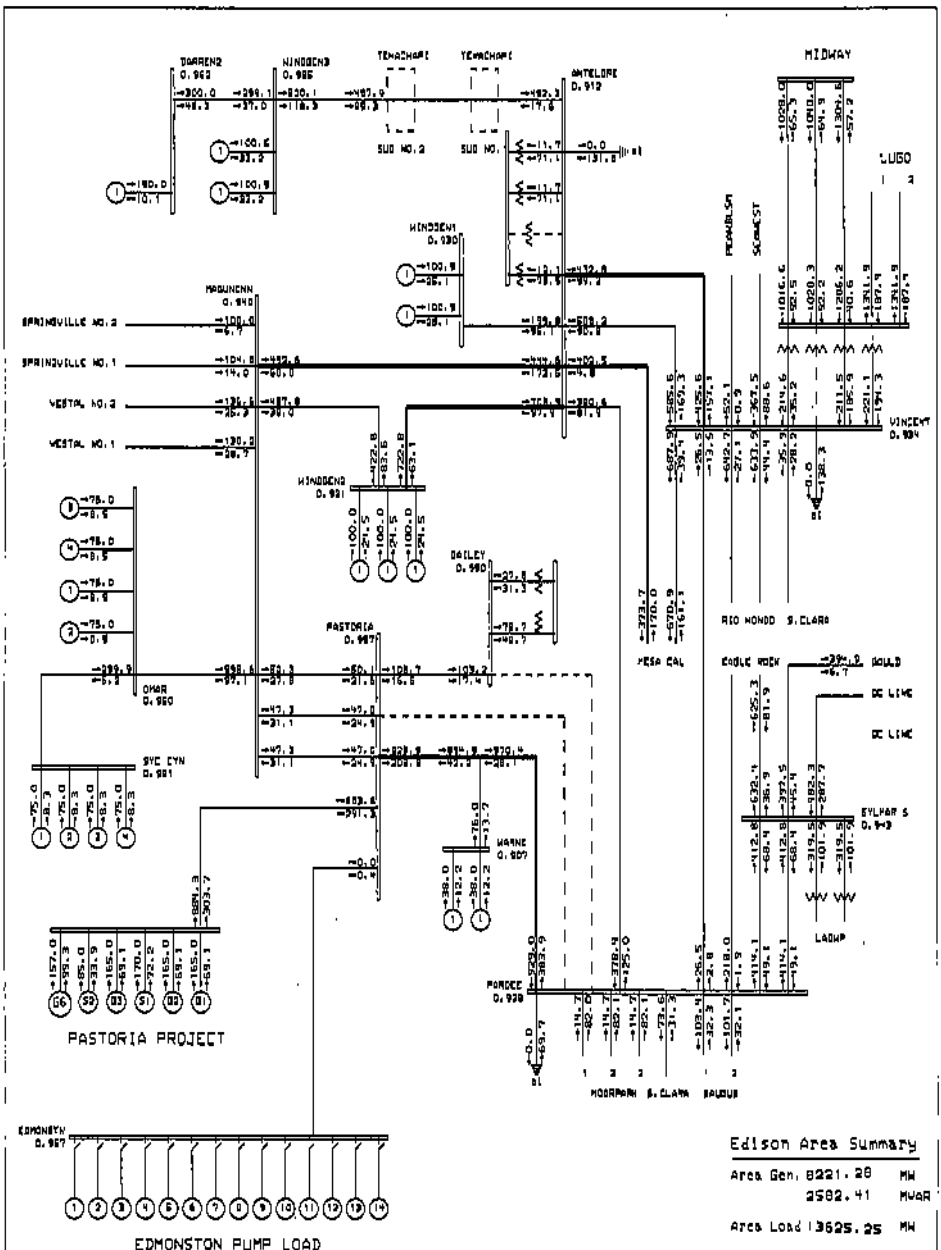

Edison Area Summary

Area Gen. 8221.28 MW
2582.41 MVAR

Area Load 13625.25 MW

BIG CREEK CORRIDOR

230 SYSTEM

MAPMAKER Wed May 04 14:15:42 2005

General Electric International, Inc. PSLF Program

GENERAL ELECTRIC COMPANY

CALPINE PASTORIA ADDITION: SYSTEM IMPACT STUDY
PROPOSED IN SERVICE DATE: JULY 2006
CASE STUDY S1: POST-PROJECT LSP (WITH VENTURA GENERATION)

N-2: DAILEY-PARDEE 230 KV
PARDEE-PASTORIA 230 KV

c:\psfi\13\calpine\yet expand
c:\psfi\13\calpine\yet expand
Rating: 1

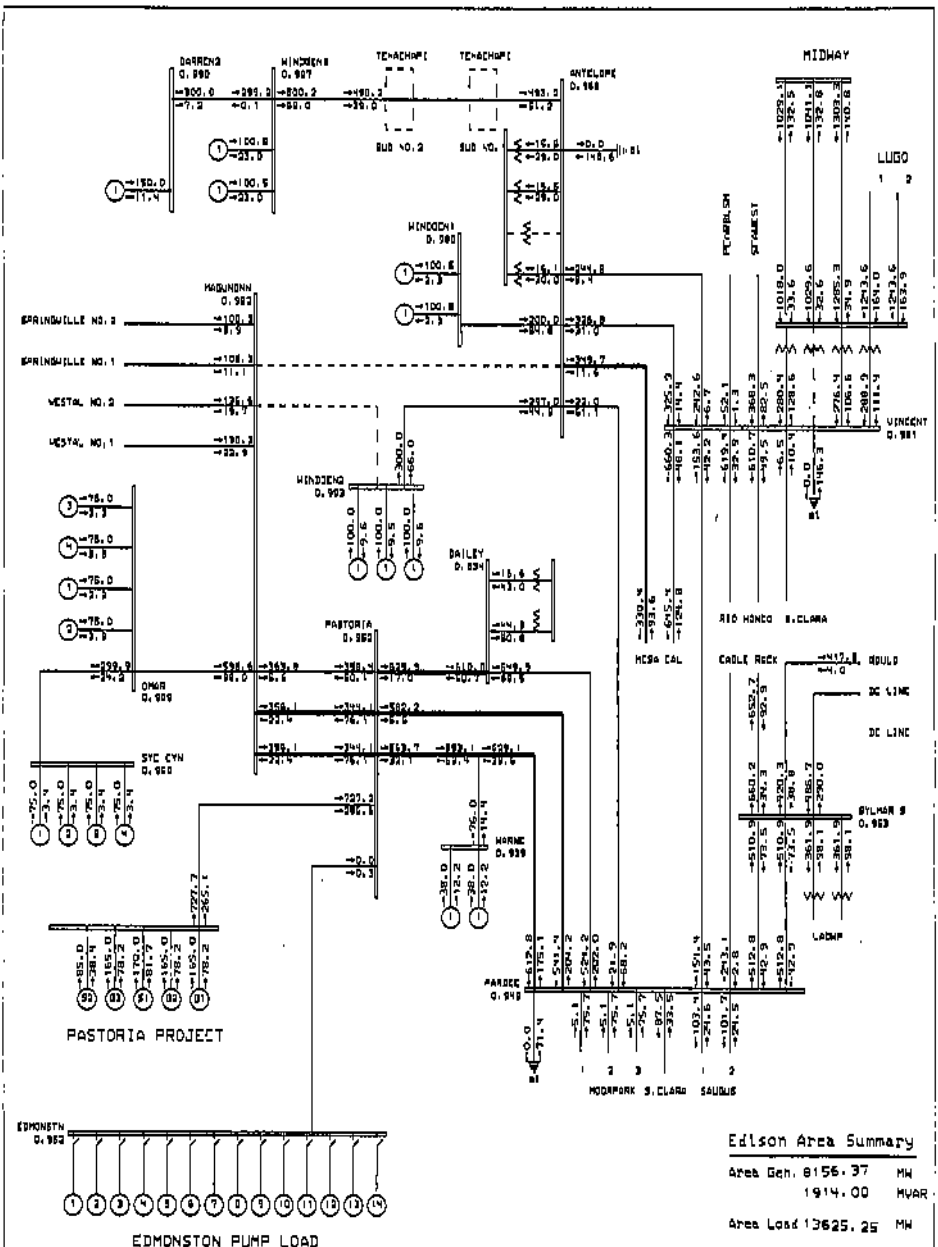
DARREN2
0.990
WINDGEN8
0.907
TEHACHAPI
TEHACHAPI
ANTELOPE
0.968
MIDWAY
LUGO
1
2
SUB NO.2
SUB NO.
WINDGEN1
0.980
MAGUNDN1
0.982
SPRINGVILLE NO.2
SPRINGVILLE NO.1
WESTAL NO.2
WESTAL NO.1
WINDGEN2
0.993
DAILEY
0.934
PASTORIA
0.982
OMAR
0.989
SYC CYN
0.950
HORNE
0.939
PARDEE
0.948
MOORPARK
S.CLARA
SAUGUS
RIO HONDO
S.CLARA
MESA CAL
CABLE ROCK
GOULD
DC LINE
DC LINE
SYLMAR S
0.953
LADWP
POWERLSM
SPRAMEST
VINCENT
0.981
PASTORIA PROJECT
EDMONSTN
0.952
EDMONSTON PUMP LOAD
Edison Area Summary
Area Gen. 8156.37 MW
1914.00 MVAR
Area Load 13625.25 MW
BIG CREEK CORRIDOR
230 SYSTEM
General Electric International, Inc. PSLF Program
GENERAL ELECTRIC COMPANY
: CALPINE PASTORIA ADDITION-SYSTEM IMPACT STUDY
: PROPOSED IN-SERVICE DATE: JULY 2006
CASE STUDY 5: PRE-PROJECT LSP (WITH VENTURA GENERATION)
N-2: ANTELOPE-MAGUNDEN NO. 1 230 KV
COTTONWOOD-MAGUNDEN 230 KV

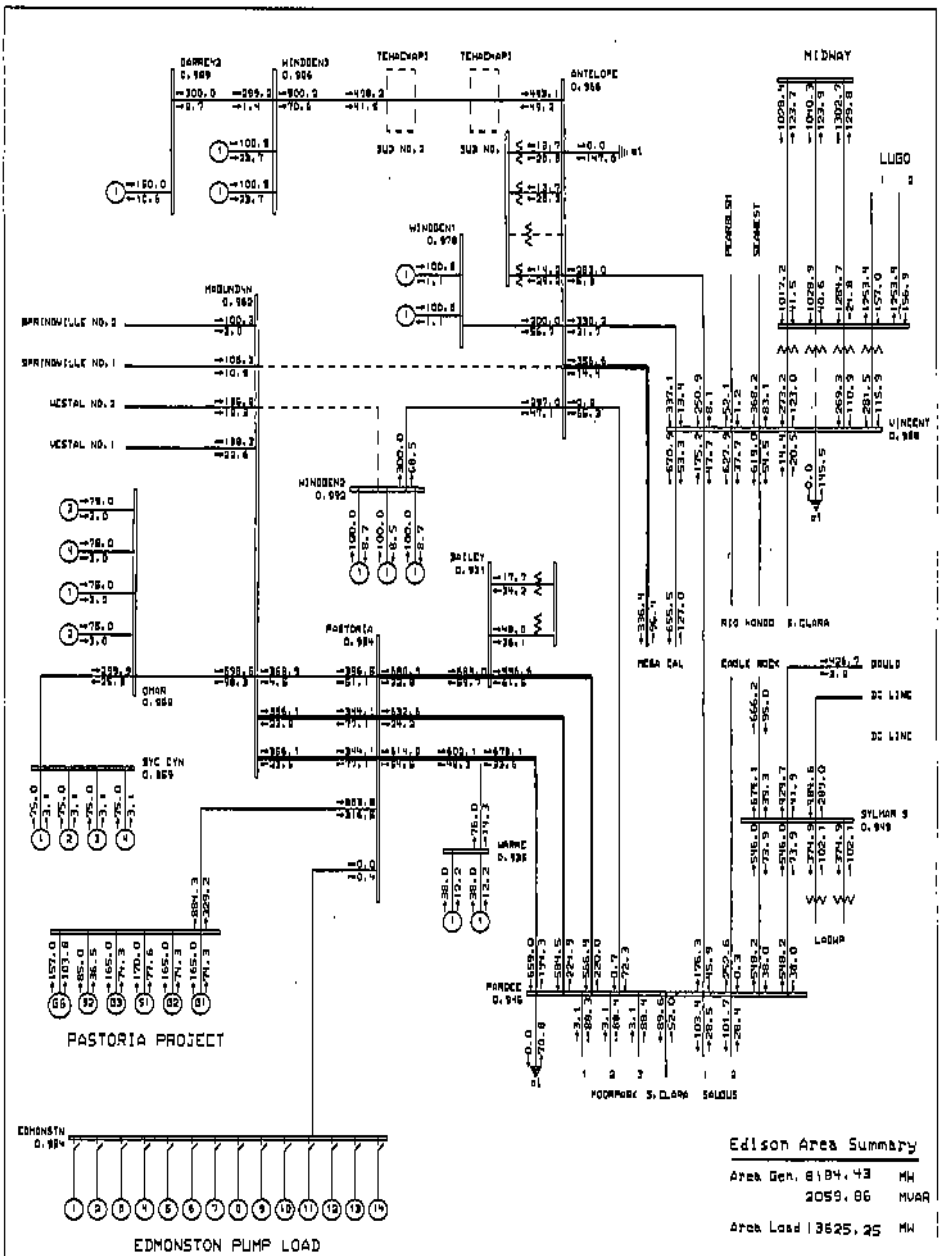
BARRE42
0.969
WINDDEN3
0.906
TEHACHAP1
TEHACHAP1
ANTELOPE
0.966
SUB NO. 2
SUB NO. 1
MIDWAY
LUGO
WINDDEN1
0.978
MOUNDAN
0.962
SPRINGVILLE NO. 2
SPRINGVILLE NO. 1
VESTAL NO. 2
VESTAL NO. 1
POLARIS 31
SOLANEST
VINCENT
0.988
WINDDEN3
0.992
BAILEY
0.931
PASTORIA
0.984
OMAR
0.958
SYC DYN
0.859
MEGA CAL
RIO HONDO
S. CLARA
EAGLE ROCK
GOULD
DC LINE
DC LINE
SYLMAR 5
0.949
LADWP
WARNE
0.935
PORDOCE
0.946
PORDOCE
S. CLARA
SOLDUS
PASTORIA PROJECT
EDMONSTN
0.984
EDMONSTON PUMP LOAD
Edison Area Summary
Area Gen. 8184.43 MW
2059.86 MVAR
Area Load 13625.25 MW
BIG CREEK CORRIDOR
230 SYSTEM
General Electric International, Inc. PSLF Program
GENERAL ELECTRIC COMPANY
CALPINE PASTORIA ADDITION: SYSTEM IMPACT STUDY
PROPOSED IN SERVICE DATE: JULY 2006
CASE STUDY G1 POST-PROJECT LSP (WITH VENTURA GENERATION)
W-21 ANTELOPE-MOUNDAN NO. 1 230 KV
CONTRAMICO-MOUNDAN 230 KV
Page 1

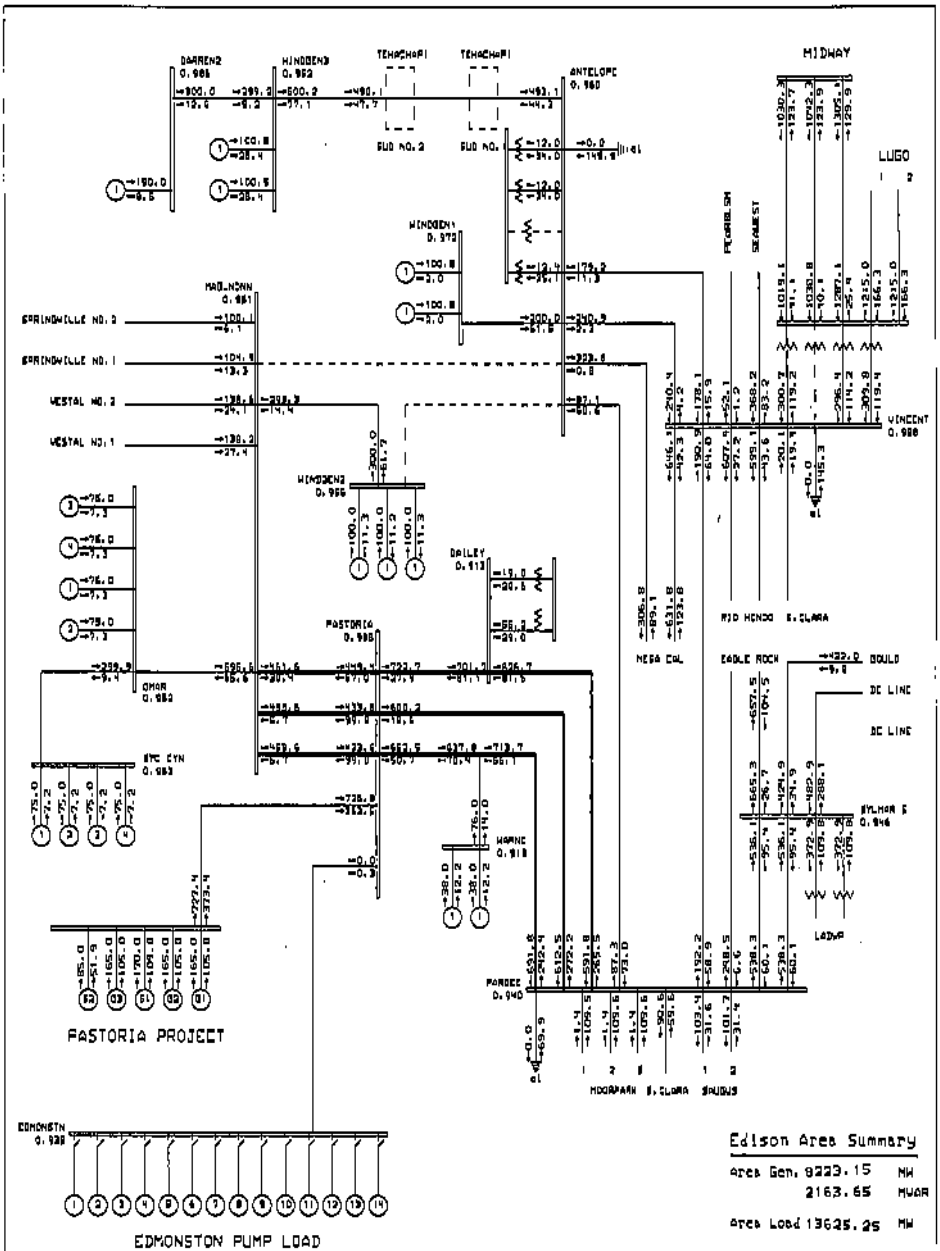

Edison Area Summary

Area Gen. 8223.15 MW
2163.65 MVAR

Area Load 13625.25 MW

BIG CREEK CORRIDOR
230 SYSTEM

General Electric International, Inc. PSLF Program

GENERAL ELECTRIC COMPANY

DALPINE PASTORIA ADDITION-SYSTEM IMPACT STUDY
PROPOSED IN-SERVICE DATE: JULY 2006
BASE STUDY S1 PRE-PROJECT LSP WITH VENTURA GENERATION

N-2: ANTELOPE-COTTONWOOD 230 KV
ANTELOPE-MAGUNDEN NO. 1 230 KV

c:\psla\31\caldpire\yet expand
c:\psla\31\caldpire\yet expand
Rating = 1

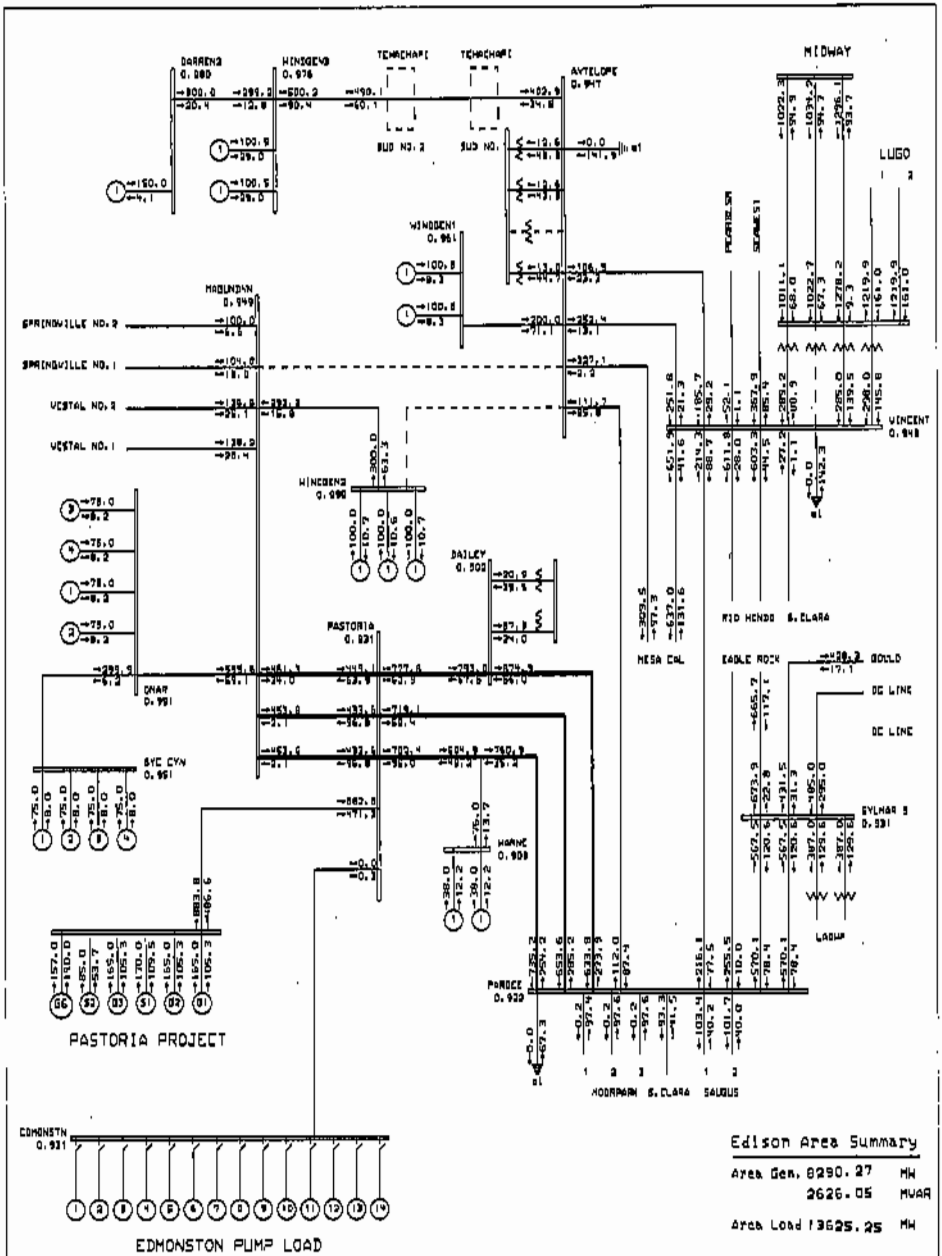
DARREN2
0.980
HINSDEV3
0.976
TEHACHAP1
TEHACHAP2
ANTELOPE
0.947
SUB NO. 2
SUB NO. 1
MIDWAY
LUGO
WINDDEV1
0.961
MAGUNDAN
0.949
SPRINGVILLE NO. 2
SPRINGVILLE NO. 1
VESTAL NO. 2
VESTAL NO. 1
WINCENT
0.948
WINCDEV2
0.990
BAILEY
0.902
PASTORIA
0.921
RIO HONDO
S. CLARA
MESA CAL
EAGLE ROCK
GOLD
DC LINE
DC LINE
SYLMAR 5
0.931
LADWP
GNAR
0.991
SYC CYN
0.951
MOHAVE
0.909
PONDOE
0.922
MODRAPAN
S. CLARA
SALGUS
PASTORIA PROJECT
COMONSTN
0.931
EDMONSTON PUMP LOAD
Edison Area Summary
Area Gen. 8290.27 MW
2626.05 MVAR
Area Load 13625.25 MW
BIG CREEK CORRIDOR
230 SYSTEM
General Electric International, Inc. PSLF Program
GENERAL ELECTRIC COMPANY
CALPINE PASTORIA ADDITION- SYSTEM IMPACT STUDY
PROPOSED IN SERVICE DATE: JULY 2006
CASE STUDY 6: POST-PROJECT LSP (WITH NEWLOAD GENERATION)
N-2: ANTELOPE-COTTONWOOD 230 KV
ANTELOPE-INGLEWOOD NO. 1 230 KV

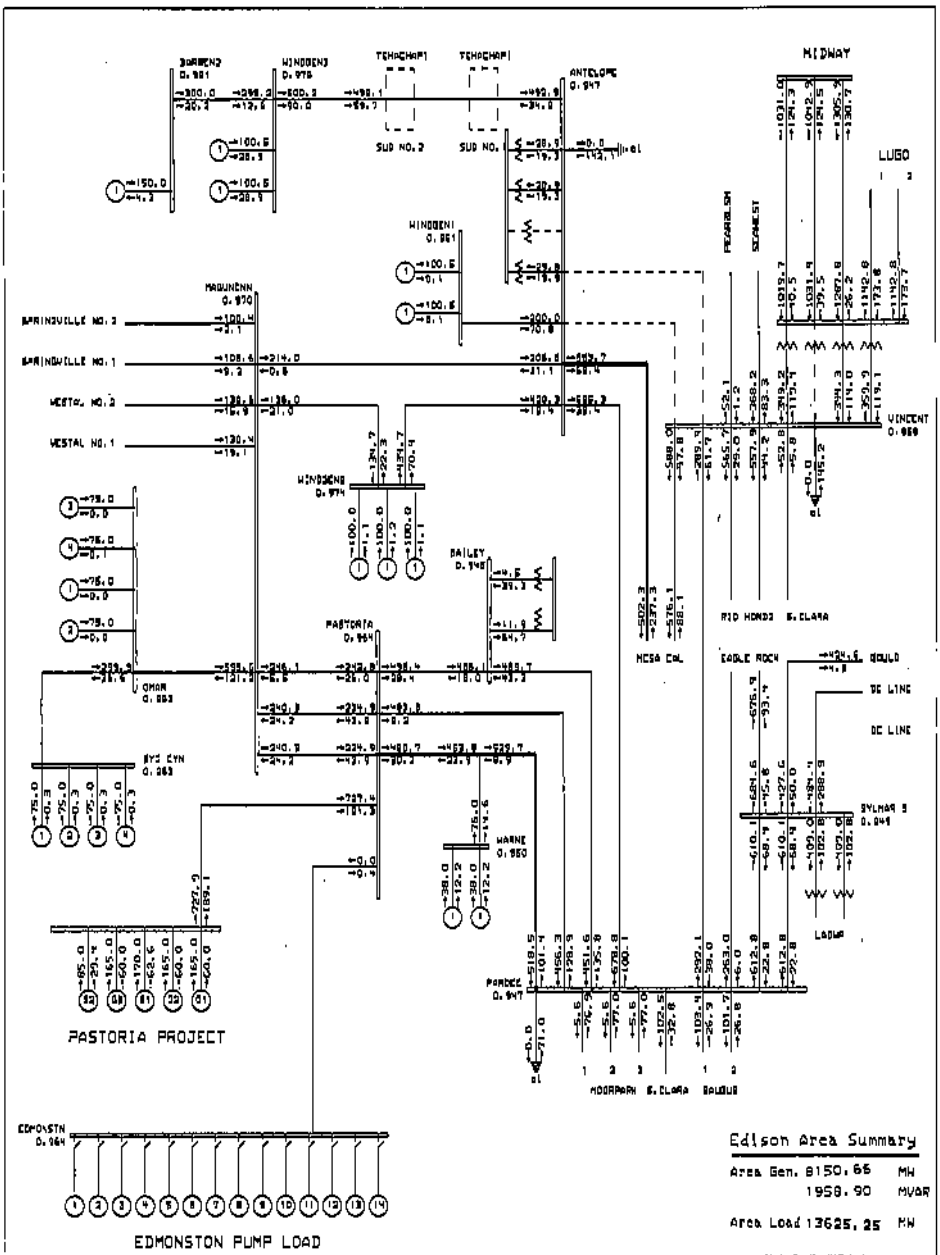
BORREN2
0.981
WINDDEN3
0.975
TEHACHAP1
TEHACHAP1
SUB NO. 2
SUB NO. 1
ANTELOPE
0.947
MIDWAY
LUGO
PEARLSN
SEAWEST
WINDDEN1
0.981
MADUNENN
0.970
BARINDVILLE NO. 2
BARINDVILLE NO. 1
WESTAL NO. 2
WESTAL NO. 1
VINCENT
0.959
WINDDEN8
0.974
BAILEY
0.948
PASTORIA
0.964
MID HONDO
S.CLARA
MESA CAL
EAGLE ROCK
GOULD
DC LINE
DC LINE
OMAR
0.953
SYS CYN
0.263
SYLMAR 3
0.949
LADWP
MARNE
0.950
PARDEE
0.947
MOORPARK
S.CLARA
BALDUE
PASTORIA PROJECT
EDMONSTN
0.964
EDMONSTON PUMP LOAD
Edison Area Summary
Area Gen. 8150.65 MW
1958.90 MVAR
Area Load 13625.25 MW
DIG CREEK CORRIDOR
230 SYSTEM
General Electric International, Inc. PSLF Program
GENERAL ELECTRIC COMPANY
CA:PHASE PASTORIA ADDITION-SYSTEM IMPACT STUDY
PROPOSED IN-SERVICE DATE: JULY 2006
CASE STUDY 5: PRE-PROJECT LSP (WITH HENRIKA GENERATION)
N-2: EXISTING ANTELOPE-VINCENT 230 KV
NEW ANTELOPE-VINCENT 230 KV
Rating = 1

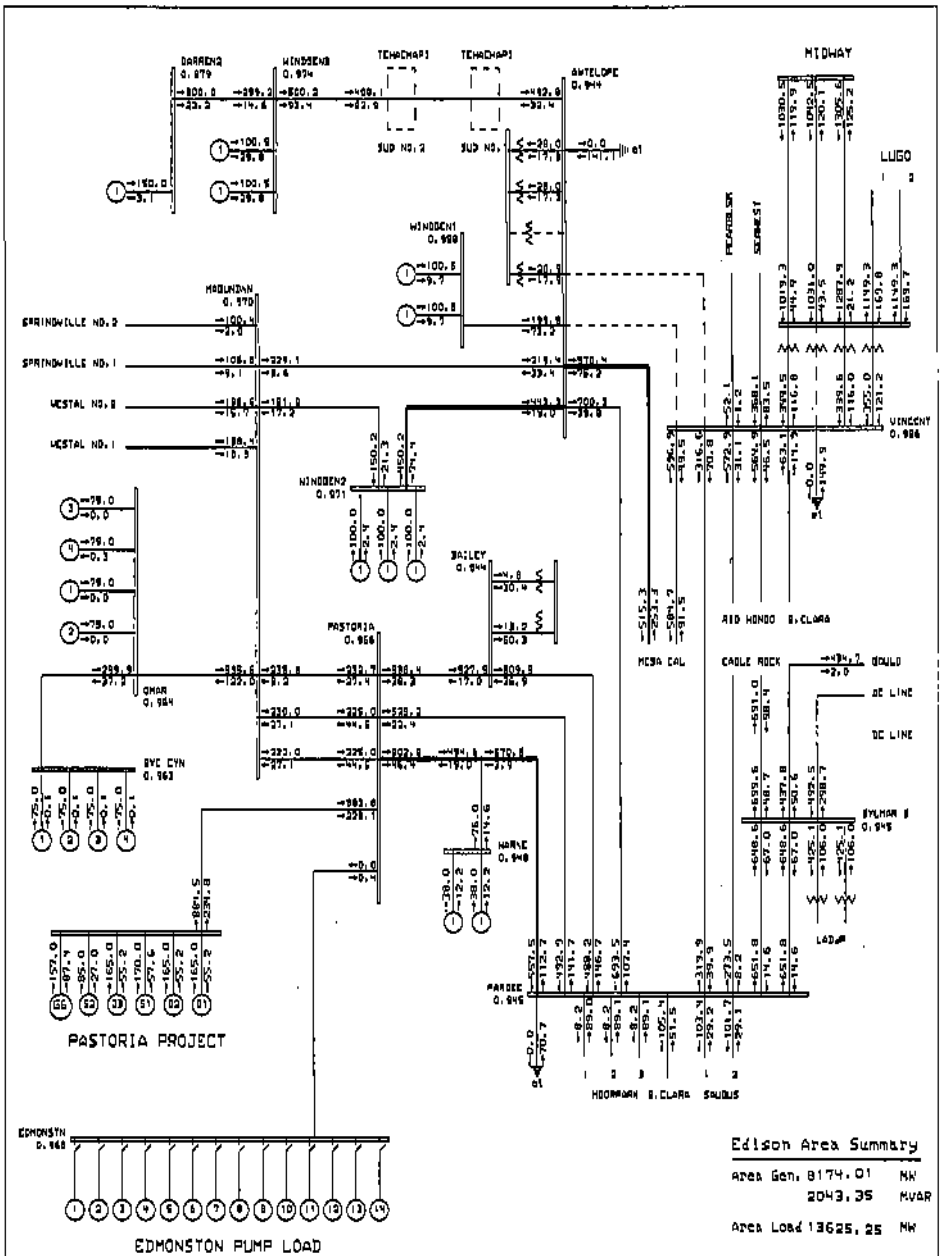
DARREN2
0.879
WINDSEN2
0.974
TEHACHAP1
TEHACHAP1
SUB NO. 2
SUB NO.
ANTELOPE
0.944
MIDWAY
LUGO
PEARDLSK
SERRES1
WINDSEN1
0.989
MOBLUNAN
0.970
SPRINGVILLE NO. 2
SPRINGVILLE NO. 1
VESTAL NO. 2
VESTAL NO. 1
VINCENT
0.984
WINDSEN2
0.971
BAILEY
0.944
PASTORIA
0.956
AID HONDO
S.CLARA
MESA CAL
CASTLE ROCK
GOULD
DC LINE
DC LINE
OMAR
0.984
BVC CYN
0.963
BYLMAR 8
0.945
HARNE
0.948
LADWP
PARDEE
0.949
HOOMAWH
S.CLARA
SAUGUS
PASTORIA PROJECT
EDMONSTN
0.968
EDMONSTON PUMP LOAD
Edison Area Summary
Area Gen. 8174.01 MW
2043.35 MVAR
Area Load 13625.25 MW
BIG CREEK CORRIDOR
230 SYSTEM
General Electric International, Inc. PSLF Program
GENERAL ELECTRIC COMPANY
CASE STUDY GC POST-PROJECT LSP (WITH VENTURA GENERATION)
NEW ANTELOPE-VINCENT 230 KV

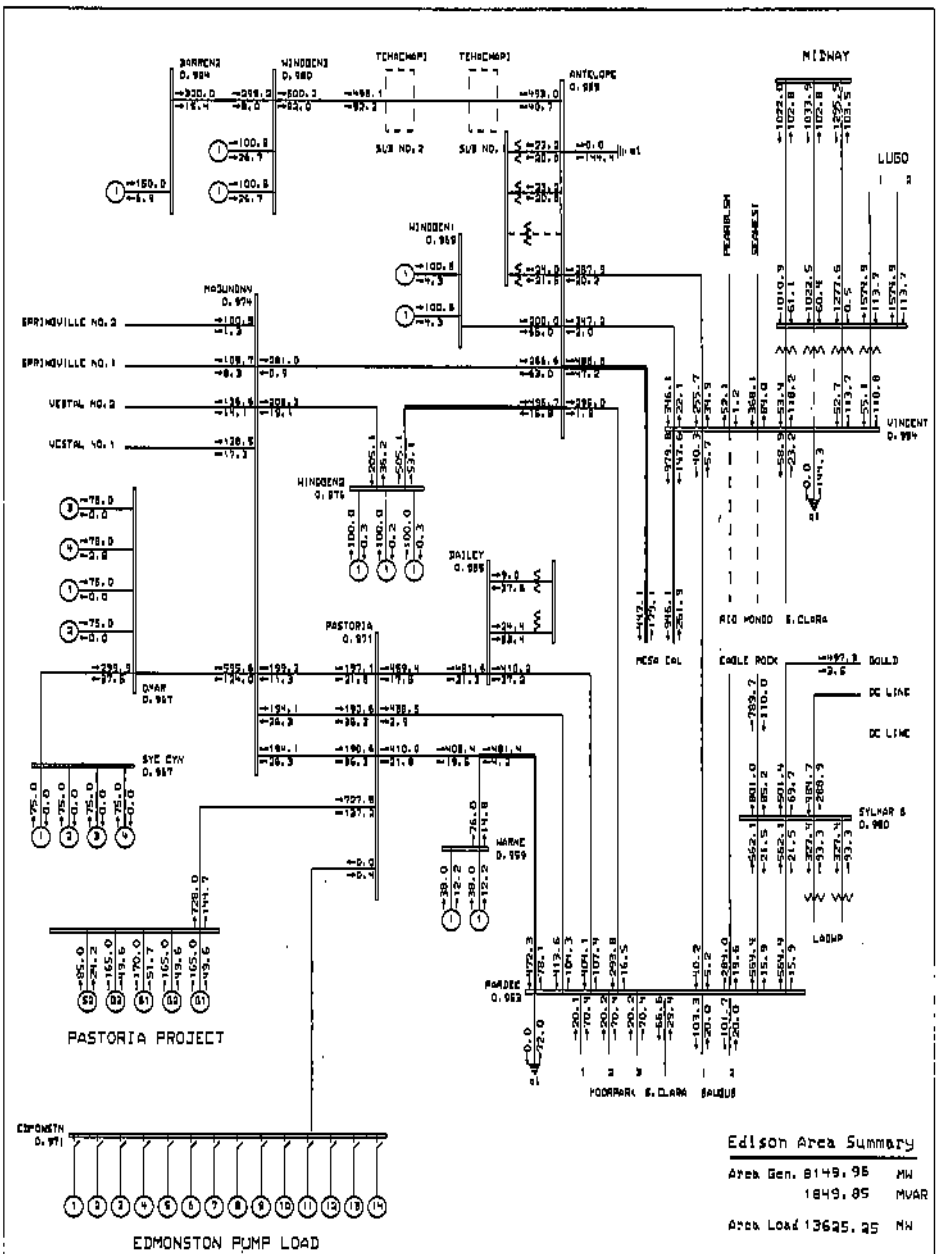

Edison Area Summary

Area Gen. 8149.95 MW
1849.85 MVAR

Area Load 13625.25 MW

BIG CREEK CORRIDOR
230 SYSTEM

General Electric International, Inc. PSLF Program

GENERAL ELECTRIC COMPANY

CALPINE PASTORIA ADDITION-SYSTEM IMPACT STUDY
PROPOSED IN-SERVICE DATE: JULY 2006
CASE STUDY 5: PRE-PROJECT LSP (WITH VENTURA GENERATION)

N-2: RIO MONDO-VINCENT NO. 1 230 KV
RIO MONDO-VINCENT NO. 2 230 KV

c:\vpsl\133\calpine\ref expand
c:\vpsl\133\calpine\ref expand
Rating = 1

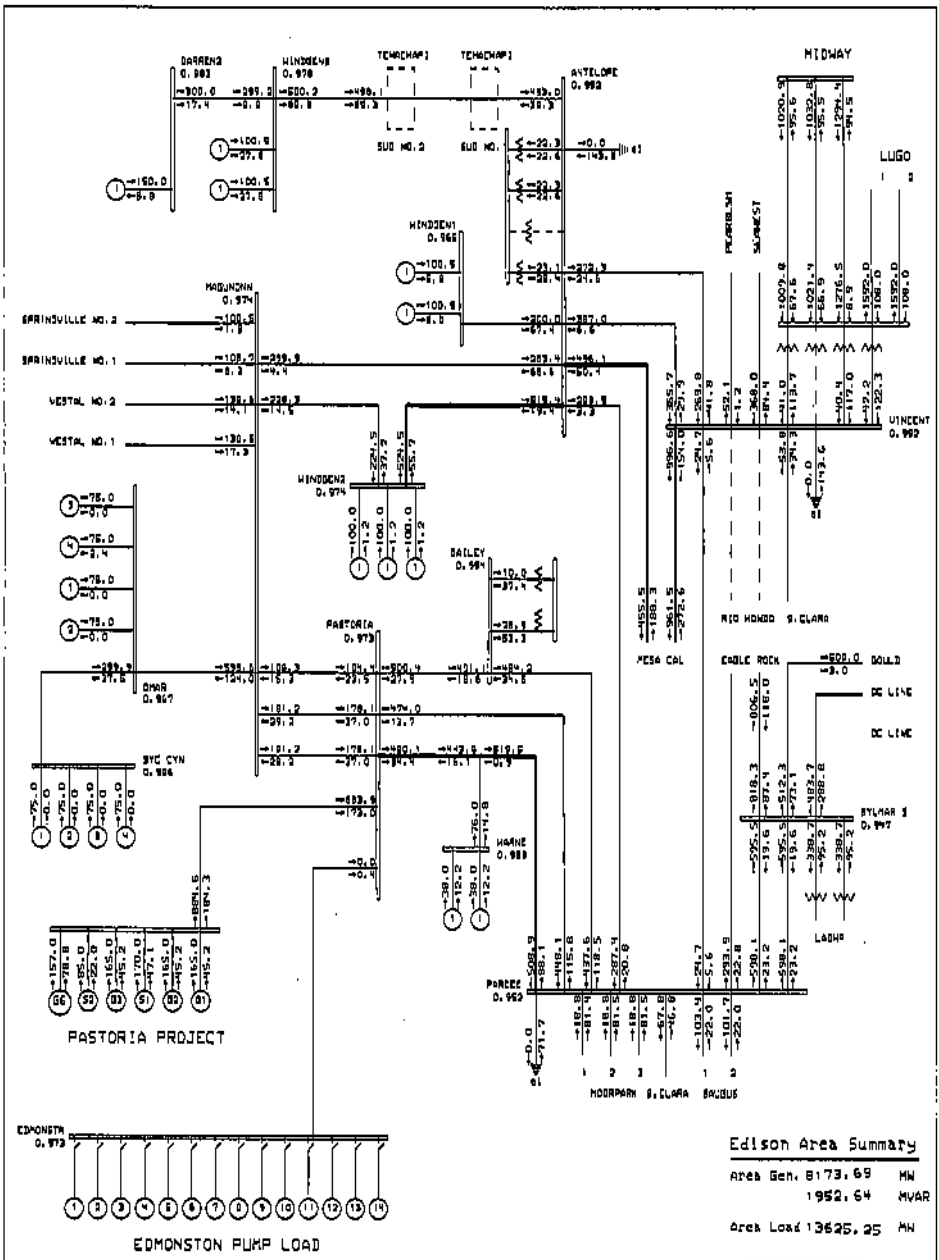
DARREN2
0.983
WINDDEV8
0.978
TEHACHAP1
TEHACHAP2
ANTELOPE
0.992
SUB NO.2
SUB NO.1
MIDWAY
LUGO
WINDDEV1
0.968
MADUNOH
0.974
BARINSVILLE NO.2
BARINSVILLE NO.1
VESTAL NO.2
VESTAL NO.1
WINDDEV2
0.974
BAILEY
0.984
PASTORIA
0.979
OMAR
0.967
SYC CYN
0.986
HAANE
0.988
PARKER
0.952
VINCENT
0.992
RIO HONDO 9.CLARA
MESA CAL
EAGLE ROCK
DOLD
DC LINE
DC LINE
SYLMAR 1
0.997
LADWP
MOORPARK 9.CLARA
BAKUSUS
PASTORIA PROJECT
EDMONSTN
0.973
EDMONSTON PUMP LOAD
Edison Area Summary
Area Gen. 8173.69 MW
1952.64 MVAR
Area Load 13625.25 MW
BIG CREEK CORRIDOR
230 SYSTEM
General Electric International, Inc. PSLF Program
GENERAL ELECTRIC COMPANY
CALPINE PASTORIA ADDITION: SYSTEM IMPACT STUDY
PROPOSED IN SERVICE DATE: JULY 2006
CASE STUDY 6: POST-PROJECT LSP WITH VENTURA GENERATION
N-2: RIO HONDO-VINCENT NO. 1 230 KV
RIO HONDO-VINCENT NO. 2 230 KV

APPENDIX D

STABILITY STUDIES
N-1

PRE-PROJECT

```
PrePEF_High_SOM.sav
PrePEF.dyd
TITLE
Calpine Pastoria Add Stability Study: Loss of One 230-KV Line
6-CYCLE 3-Phase Fault at Antelope 230kV Bus
N-1 OUTAGE: Magunden-Antelope No.1 230kV Line
SYSTEM STABILITY CASE - A-Ma_N1_PrePEF.swt
PrePEF_High_SOM.sav + PrePEF.dyd + A-Ma_N1_PrePEF.swt
RUN 10.0
CC
CC   ***CALPINE PASTORIA ADD DYNAMIC STABILITY ASSESSMENT***
CC   APPLY A 3-PHASE FAULT ON THE ANTELOPE 230-KV BUS
FB   0.0 "ANTELOPE" 230
CC
CC   CLEAR FAULT IN 6 CYCLES
CFB  6.0 "ANTELOPE" 230
CC
CC   REMOVE MAGUNDEN-ANTELOPE NO.1 230-KV LINE
DL   6.0 "MAGUNDEN" 230. "ANTELOPE" 230. "1 "
```

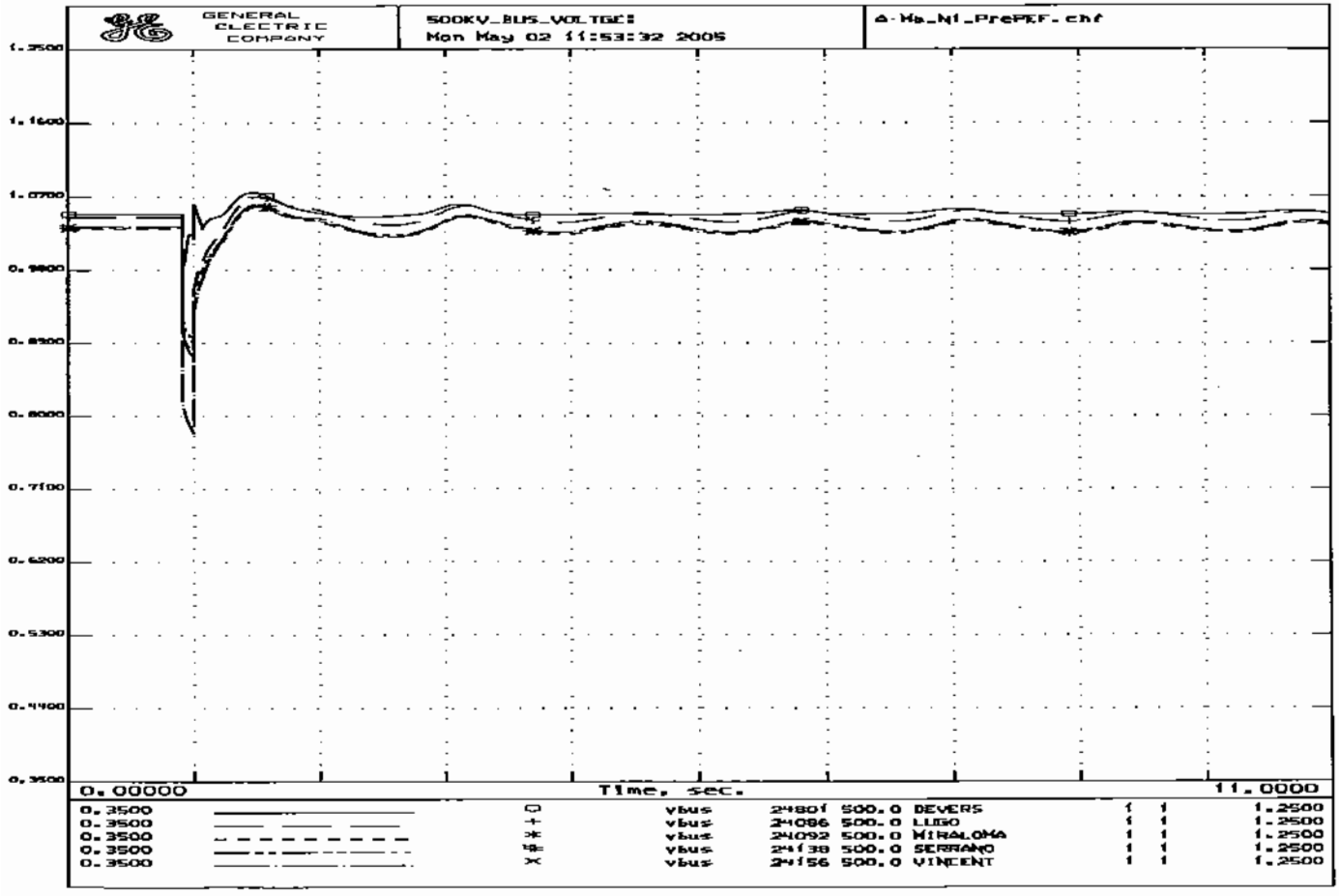
GENERAL ELECTRIC COMPANY
500KV_BUS_VOLTGE:
Mon May 02 11:53:32 2005
A-Ma_N1_PrePEF.chf
1.3500
1.1600
1.0700
0.9800
0.8900
0.8000
0.7100
0.6200
0.5300
0.4400
0.3500
0.00000
Time, sec.
11.0000
0.3500 □ vbus 24801 500.0 DEVERS 1 1 1.2500
0.3500 + vbus 24086 500.0 LUGO 1 1 1.2500
0.3500 * vbus 24092 500.0 MIRALOMA 1 1 1.2500
0.3500 # vbus 24138 500.0 SERRANO 1 1 1.2500
0.3500 × vbus 24156 500.0 VINCENT 1 1 1.2500

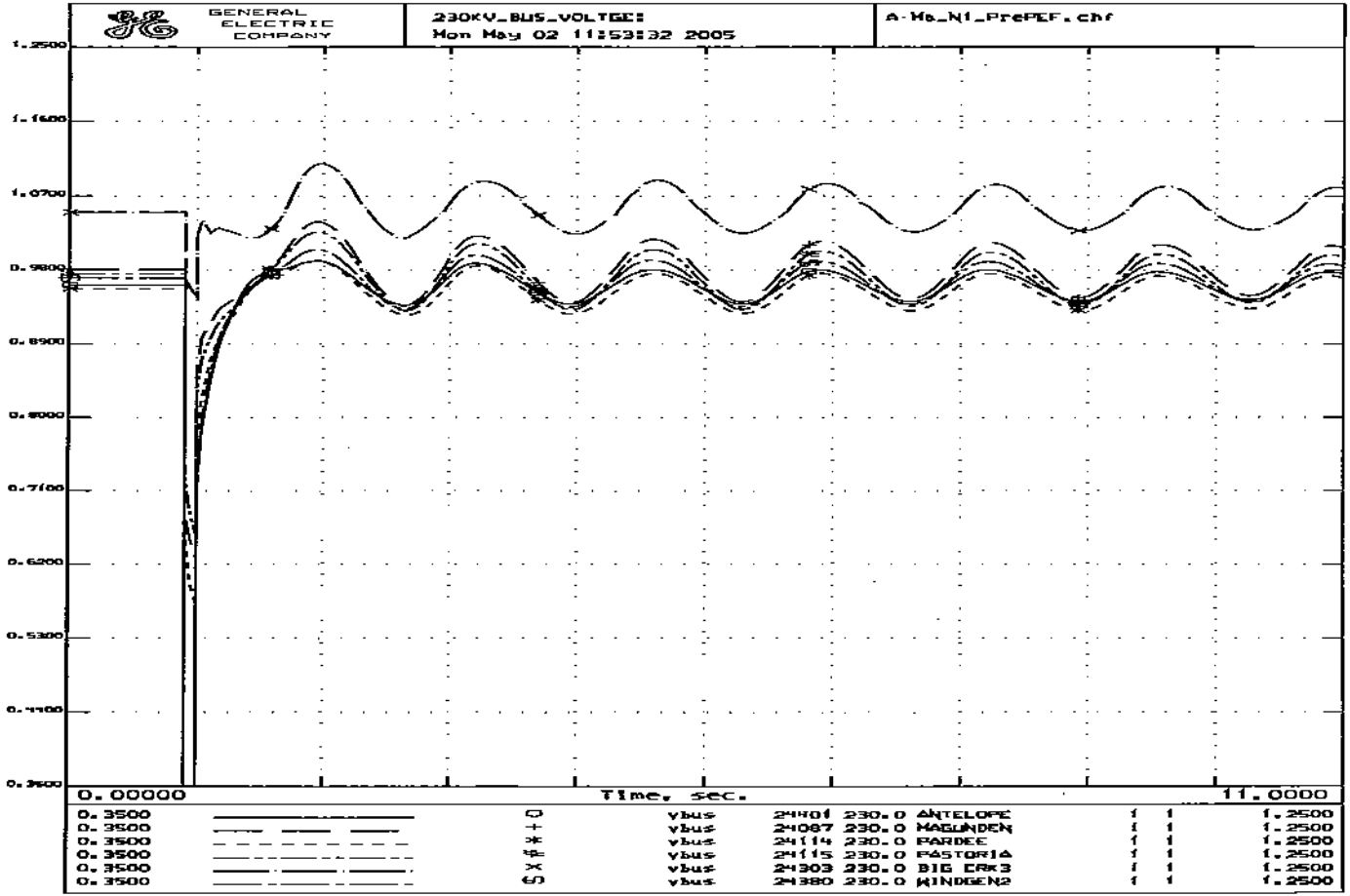
GENERAL ELECTRIC COMPANY
230KV_BUS_VOLTGE:
Mon May 02 11:53:32 2005
A-Ma_N1_PrePEF.chf
1.2500
1.1600
1.0700
0.9800
0.8900
0.8000
0.7100
0.6200
0.5300
0.4400
0.3500
0.00000
Time, sec.
11.0000
0.3500 vbus 24401 230.0 ANTELOPE 1 1 1.2500
0.3500 vbus 24087 230.0 MAGUNDEN 1 1 1.2500
0.3500 vbus 24114 230.0 PARDEE 1 1 1.2500
0.3500 vbus 24115 230.0 PASTORIA 1 1 1.2500
0.3500 vbus 24303 230.0 BIG CRK3 1 1 1.2500
0.3500 vbus 24380 230.0 WINDGEN2 1 1 1.2500

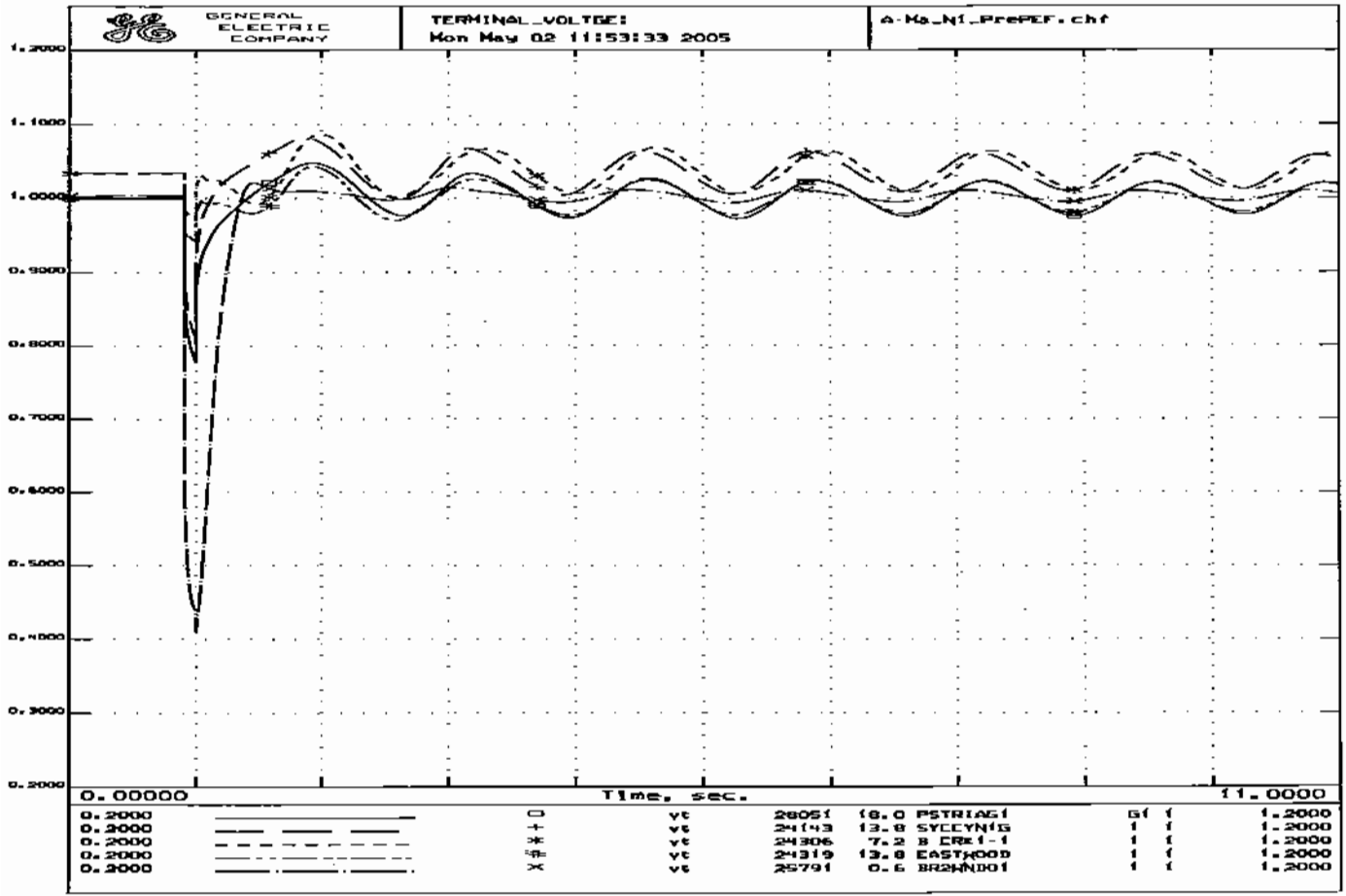
GENERAL ELECTRIC COMPANY
TERMINAL_VOLTGE:
Mon May 02 11:53:33 2005
A-Ma_N1_PrePEF.chf
1.2000
1.1000
1.0000
0.9000
0.8000
0.7000
0.6000
0.5000
0.4000
0.3000
0.2000
0.00000
Time, sec.
11.0000
0.2000 vt 28051 18.0 PSTRIAG1 G1 1 1.2000
0.2000 vt 24143 13.8 SYCCYN1G 1 1 1.2000
0.2000 vt 24306 7.2 B CRK1-1 1 1 1.2000
0.2000 vt 24319 13.8 EASTWOOD 1 1 1.2000
0.2000 vt 25791 0.6 BR2WND01 1 1 1.2000

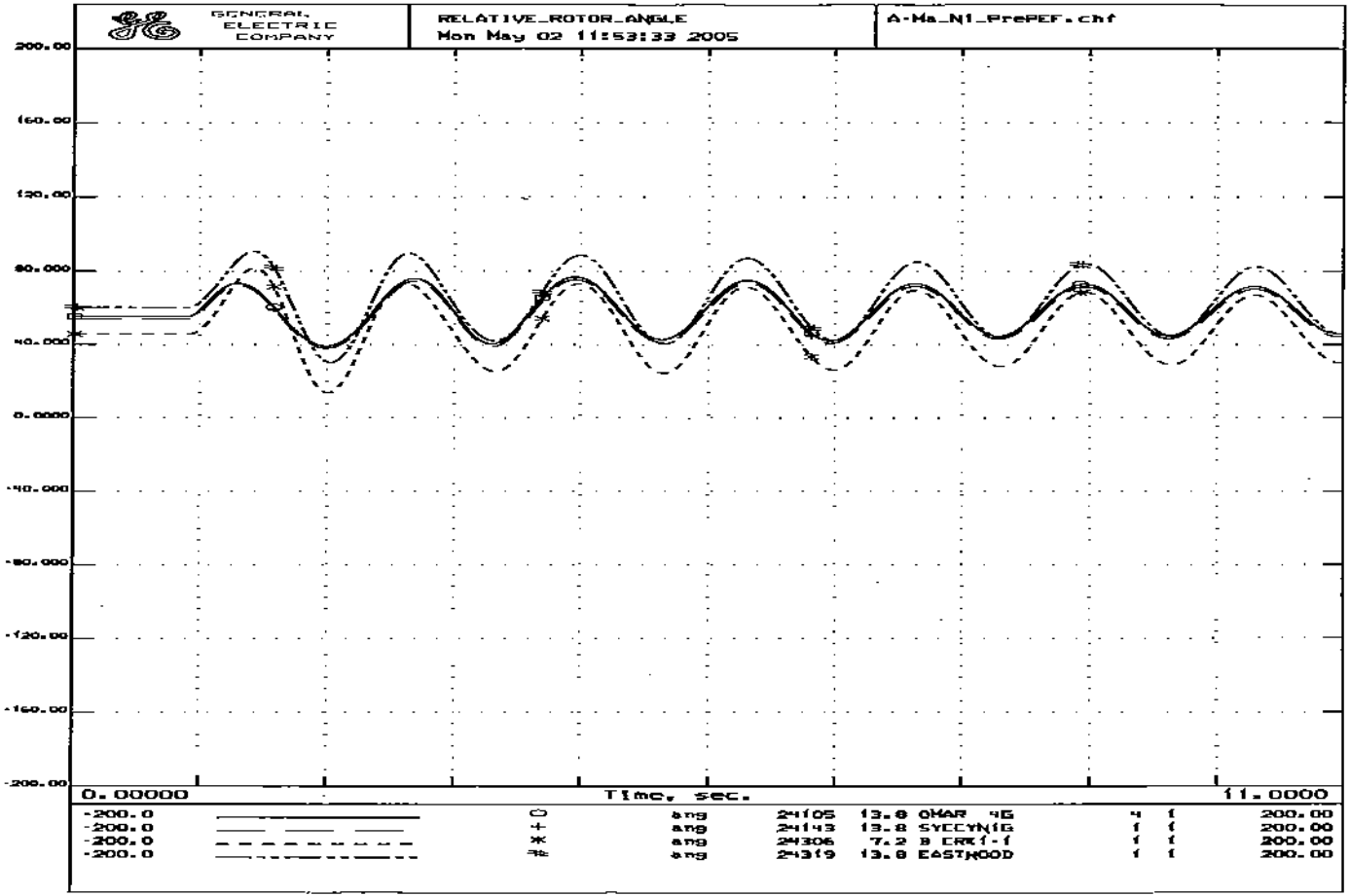
GENERAL ELECTRIC COMPANY
RELATIVE_ROTOR_ANGLE
Mon May 02 11:53:33 2005
A-Ma_N1_PrePEF.chf
200.00
160.00
120.00
80.000
40.000
0.0000
-40.000
-80.000
-120.00
-160.00
-200.00
0.00000
Time, sec.
11.0000
-200.0 ang 24105 13.8 OMAR 4G 4 1 200.00
-200.0 ang 24143 13.8 SYECYNIG 1 1 200.00
-200.0 ang 24306 7.2 B ERK1-1 1 1 200.00
-200.0 ang 24319 13.8 EASTWOOD 1 1 200.00

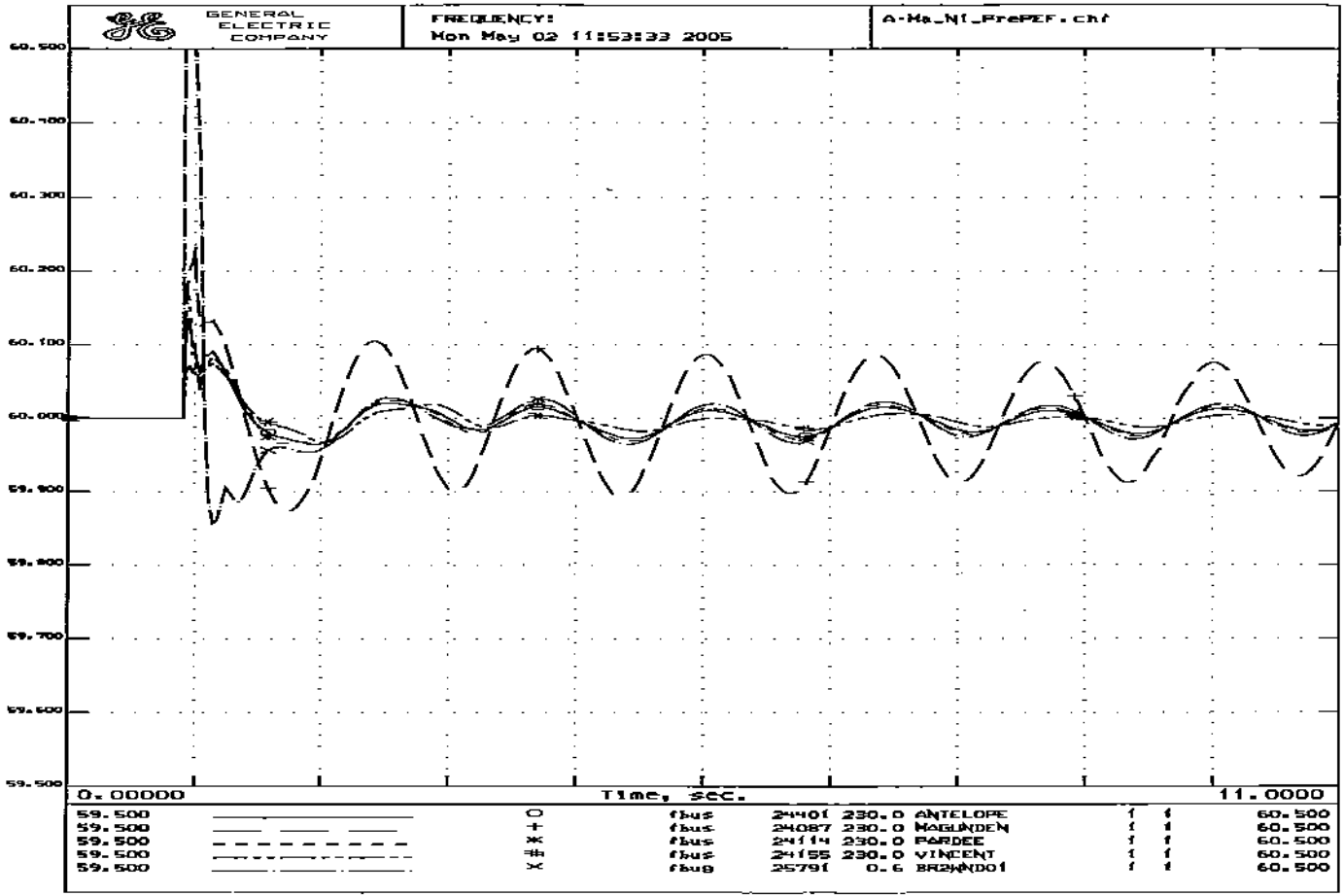
GENERAL ELECTRIC COMPANY
FREQUENCY:
Mon May 02 11:53:33 2005
A-Ma_NI_PrePEF.chf
60.500
60.400
60.300
60.200
60.100
60.000
59.900
59.800
59.700
59.600
59.500
0.00000
Time, sec.
11.0000
59.500 ○ fbus 24401 230.0 ANTELOPE 1 1 60.500
59.500 + fbus 24087 230.0 MAGUNDEN 1 1 60.500
59.500 * fbus 24114 230.0 PARDEE 1 1 60.500
59.500 # fbus 24155 230.0 VINCENT 1 1 60.500
59.500 × fbus 25791 0.6 BRANDO1 1 1 60.500

```
PrePEF_High_SOM.sav
PrePEF.dyd
TITLE
Calpine Pastoria Add Stability Study: Loss of One 230-KV Line
6-CYCLE 3-Phase Fault at Antelope 230kV Bus
N-1 OUTAGE: Mesa-Antelope 230kV Line
SYSTEM STABILITY CASE - A-Me_N1_PrePEF.swt
PrePEF_High_SOM.sav + PrePEF.dyd + A-Me_N1_PrePEF.swt
RUN 10.0
CC
CC   ***CALPINE PASTORIA ADD DYNAMIC STABILITY ASSESSMENT***
CC   APPLY A 3-PHASE FAULT ON THE ANTELOPE 230-KV BUS
FB   0.0 "ANTELOPE" 230
CC
CC   CLEAR FAULT IN 6 CYCLES
CFB 6.0 "ANTELOPE" 230
CC
CC   REMOVE MESA-ANTELOPE 230-KV LINE
DL   6.0 "MESA CAL" 230, "ANTELOPE" 230, "1 "
```

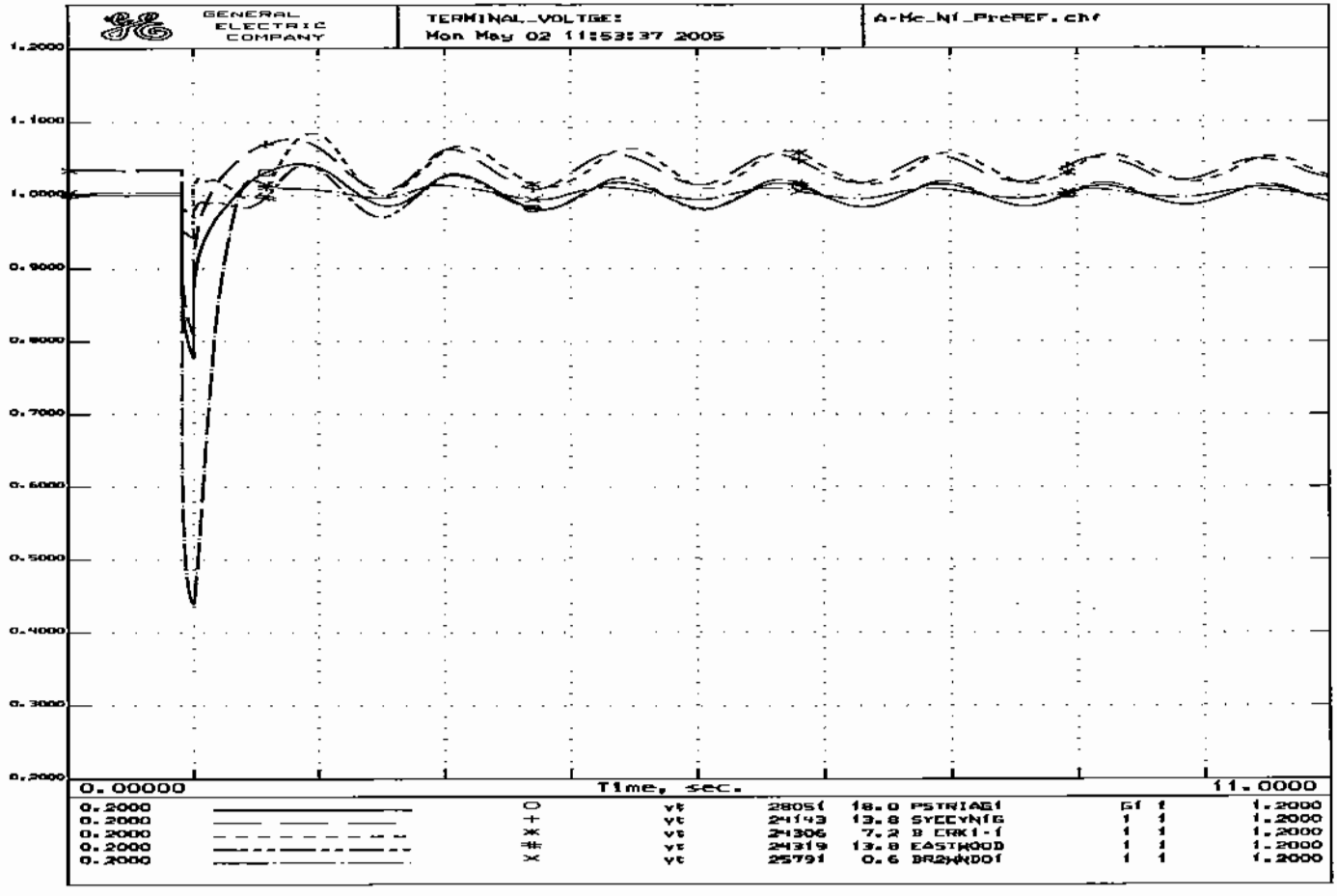
GENERAL ELECTRIC COMPANY
TERMINAL_VOLTGE:
Mon May 02 11:53:37 2005
A-Mc_NI_PrePEF.chf
1.2000
1.1000
1.0000
0.9000
0.8000
0.7000
0.6000
0.5000
0.4000
0.3000
0.2000
0.00000
Time, sec.
11.0000
0.2000 ○ vt 28051 18.0 PSTRIAE1 Gf 1 1.2000
0.2000 + vt 24143 13.8 SYECYNIG 1 1 1.2000
0.2000 ✳ vt 24306 7.2 B CRK1-1 1 1 1.2000
0.2000 # vt 24319 13.8 EASTWOOD 1 1 1.2000
0.2000 × vt 25791 0.6 BR2WNDOI 1 1 1.2000

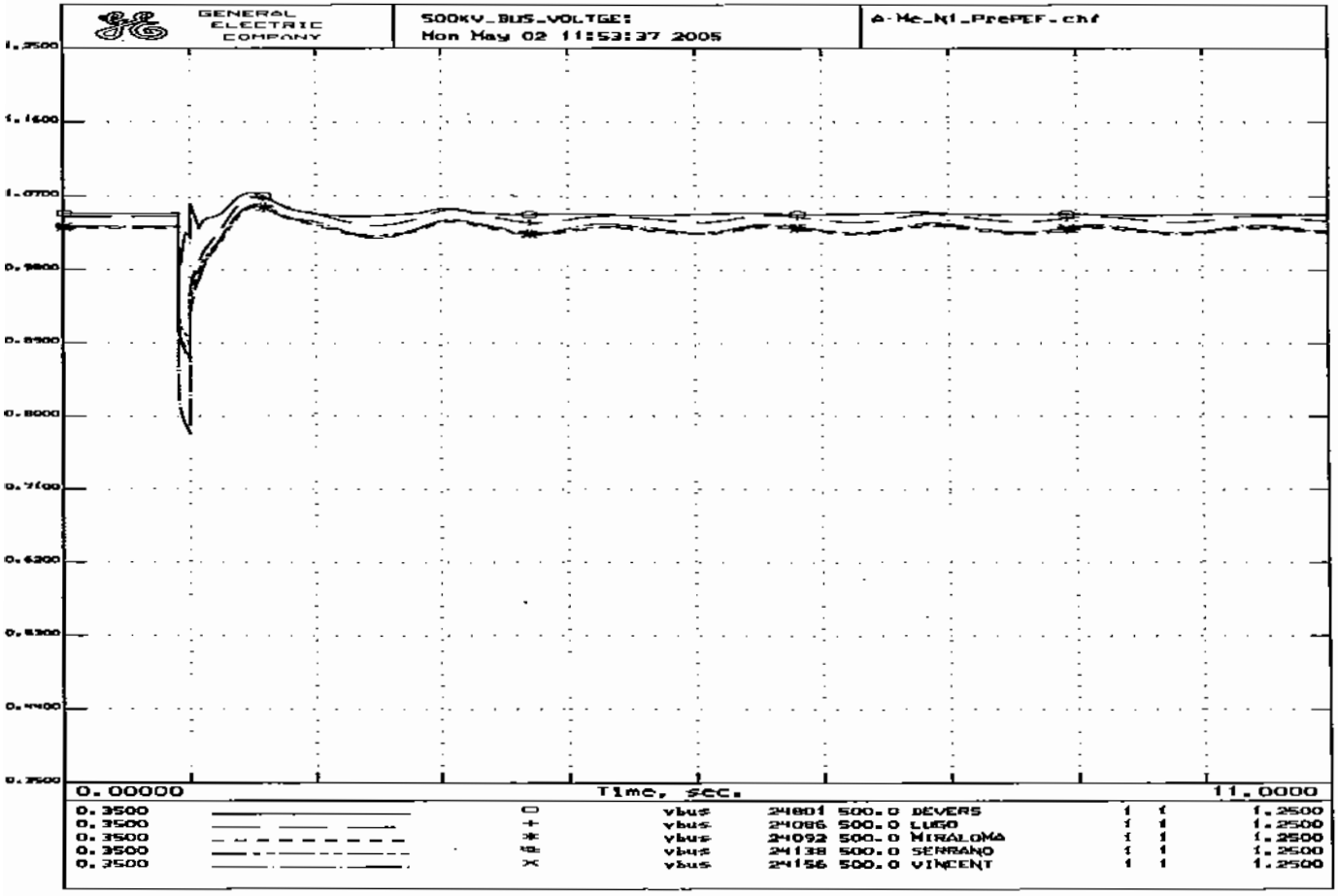
GENERAL ELECTRIC COMPANY
500KV_BUS_VOLTGE:
Mon May 02 11:53:37 2005
A-Me_N1_PrePEF.chf
1.2500
1.1600
1.0700
0.9800
0.8900
0.8000
0.7100
0.6200
0.5300
0.4400
0.3500
0.00000
Time, sec.
11.0000
0.3500 vbus 24801 500.0 DEVERS 1 1 1.2500
0.3500 vbus 24086 500.0 LUGO 1 1 1.2500
0.3500 vbus 24092 500.0 MIRALOMA 1 1 1.2500
0.3500 vbus 24138 500.0 SERRANO 1 1 1.2500
0.3500 vbus 24156 500.0 VINCENT 1 1 1.2500

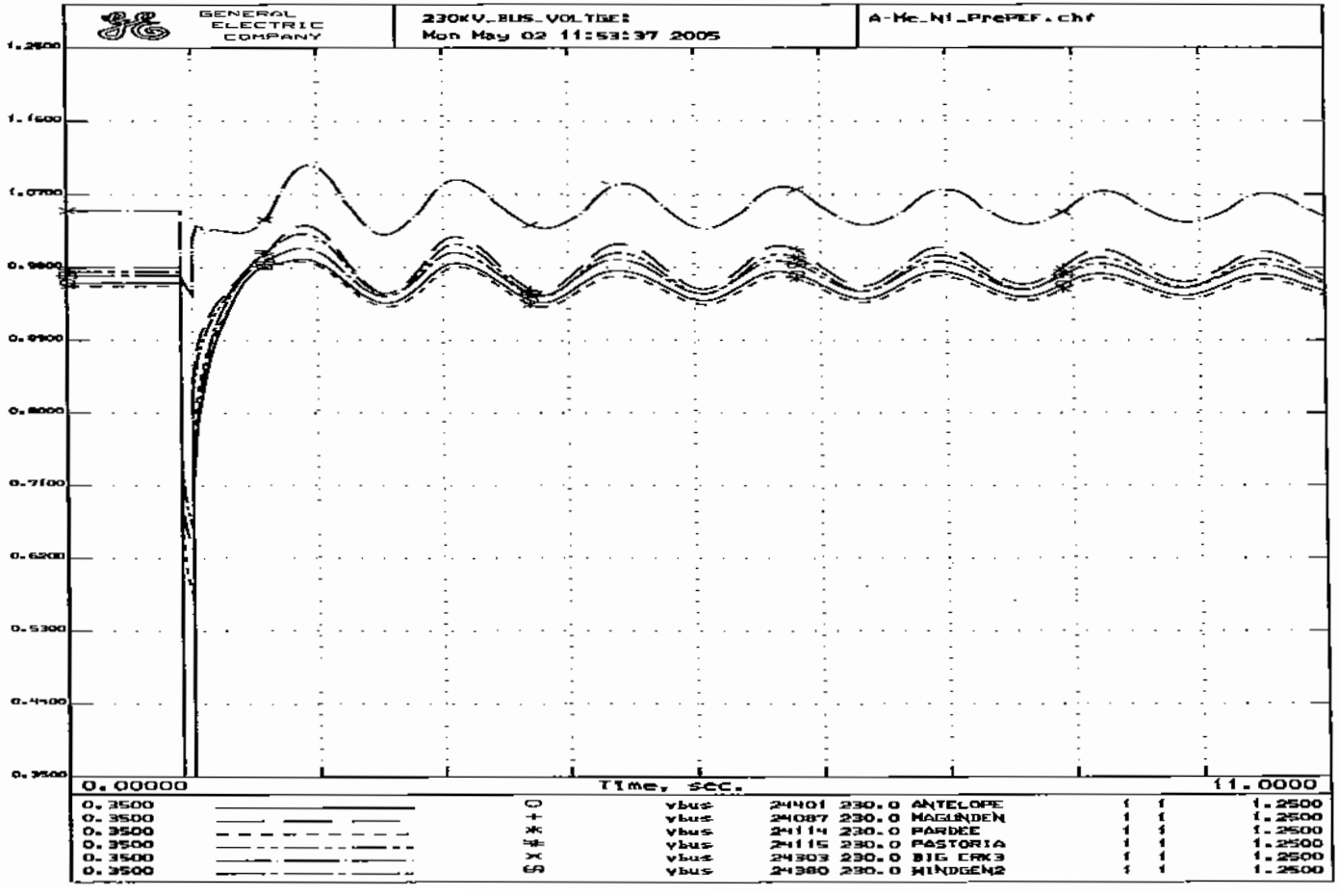
GENERAL ELECTRIC COMPANY
230KV_BUS_VOLTGE:
Mon May 02 11:53:37 2005
A-Mc_NI_PrePEF.chf
1.2500
1.1600
1.0700
0.9800
0.9900
0.8000
0.7100
0.6200
0.5300
0.4400
0.3500
0.00000
Time, sec.
11.0000
0.3500 ○ vbus 24401 230.0 ANTELOPE 1 1 1.2500
0.3500 + vbus 24087 230.0 MAGUNDEN 1 1 1.2500
0.3500 * vbus 24114 230.0 PARDEE 1 1 1.2500
0.3500 * vbus 24115 230.0 PASTORIA 1 1 1.2500
0.3500 × vbus 24303 230.0 BIG CRK3 1 1 1.2500
0.3500 vbus 24380 230.0 WINDGEN2 1 1 1.2500

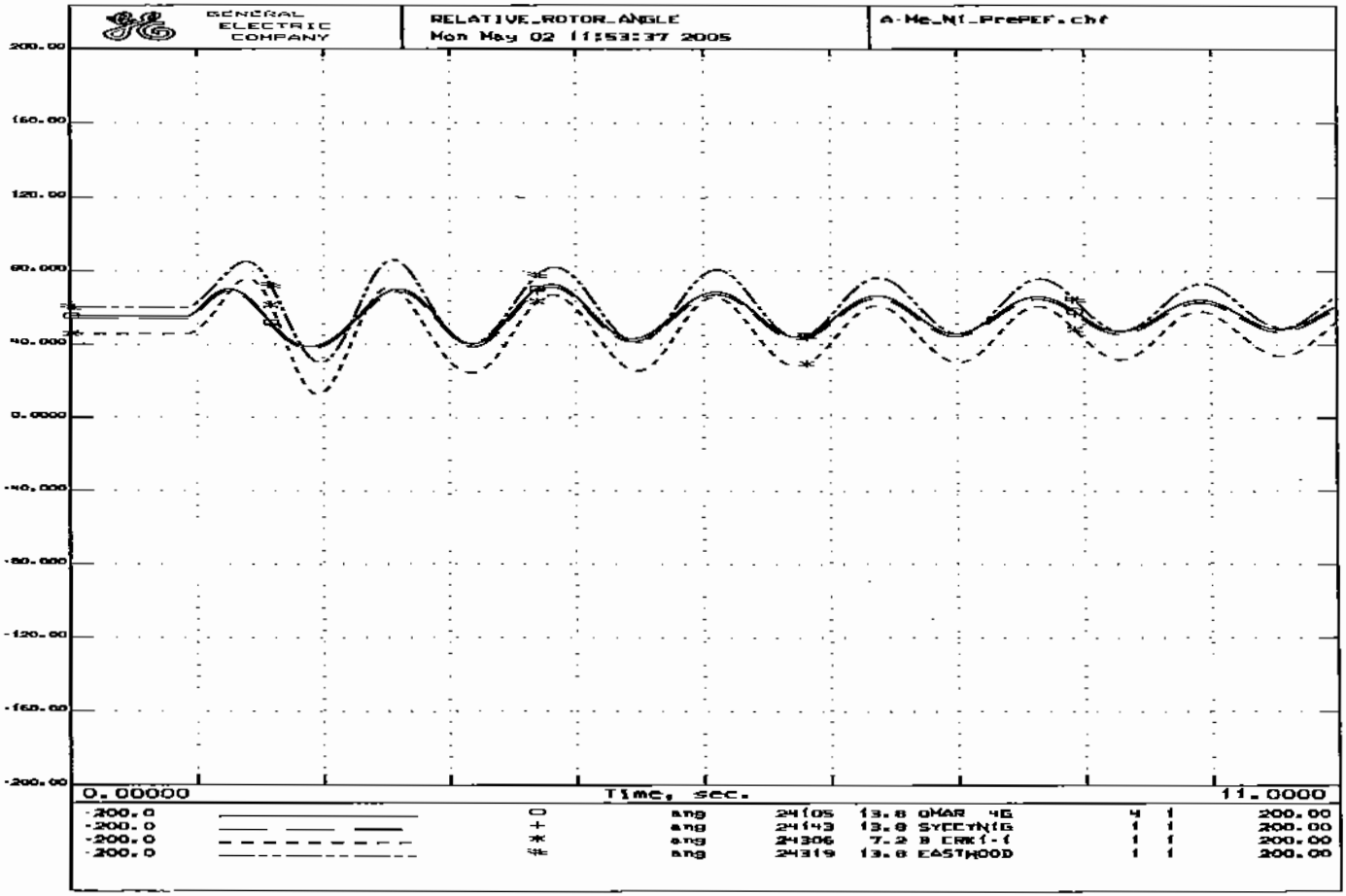
GENERAL ELECTRIC COMPANY
RELATIVE_ROTOR_ANGLE
Mon May 02 11:53:37 2005
A-Me_Nf_PrePEF.chf
200.00
160.00
120.00
80.000
40.000
0.0000
-40.000
-80.000
-120.00
-160.00
-200.00
0.00000
Time, sec.
11.0000
-200.0 ang 24105 13.8 OMAR 4G 4 1 200.00
-200.0 ang 24143 13.8 SYCCYNIG 1 1 200.00
-200.0 ang 24306 7.2 B ERKI-1 1 1 200.00
-200.0 ang 24319 13.8 EASTWOOD 1 1 200.00

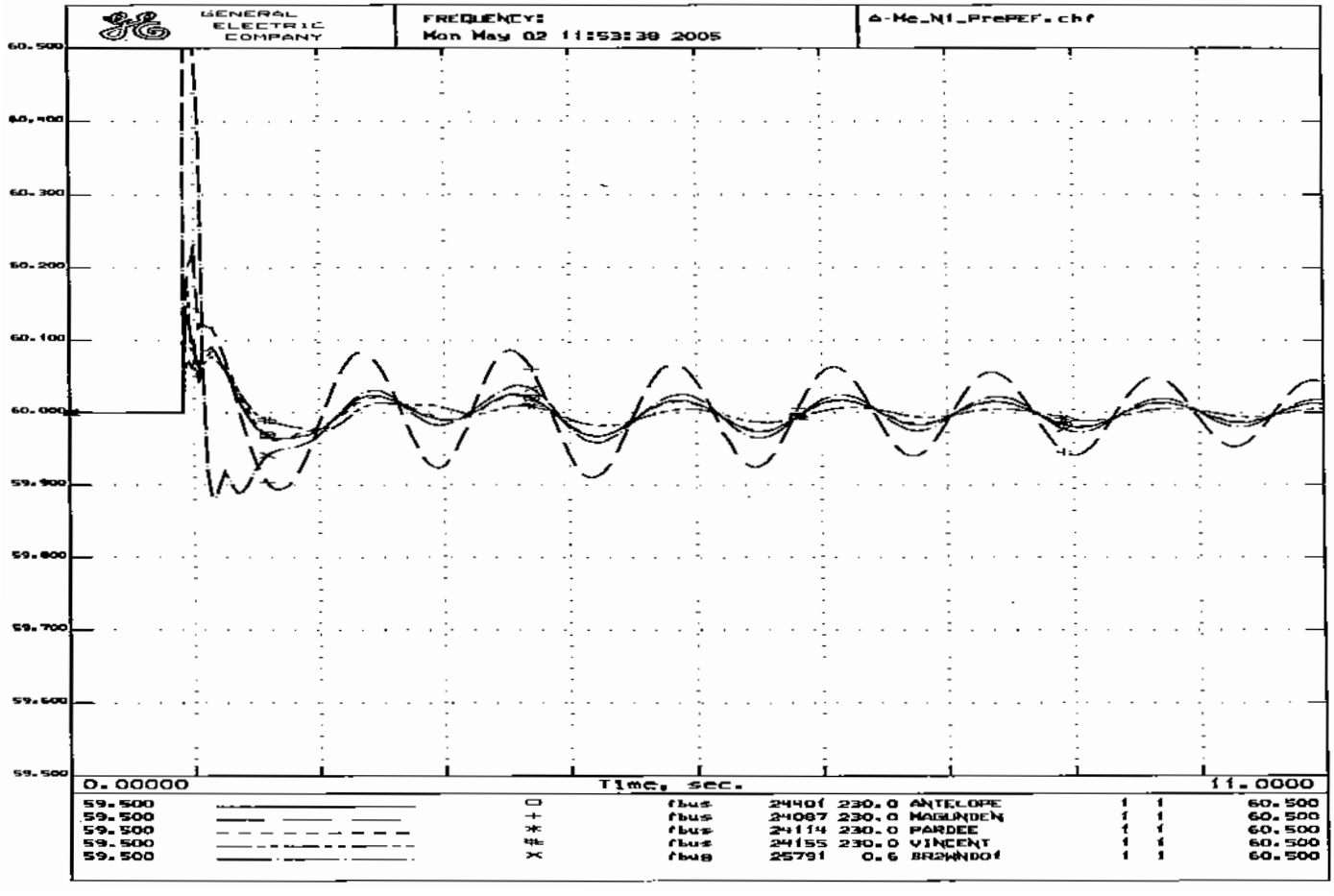
GENERAL ELECTRIC COMPANY
FREQUENCY:
Mon May 02 11:53:38 2005
A-Mc_N1_PrePEF.chf
60.500
60.400
60.300
60.200
60.100
60.000
59.900
59.800
59.700
59.600
59.500
0.00000
Time, sec.
11.0000
59.500 □ fbus 24401 230.0 ANTELOPE 1 1 60.500
59.500 + fbus 24087 230.0 MAGUNDEN 1 1 60.500
59.500 * fbus 24114 230.0 PARDEE 1 1 60.500
59.500 fbus 24155 230.0 VINCENT 1 1 60.500
59.500 × fbus 25791 0.6 BRAWNDOF 1 1 60.500

```
PrePEF_High_SOM.sav
PrePEF.dyd
TITLE
Calpine Pastoria Add Stability Study: Loss of One 230-KV Line
6-CYCLE 3-Phase Fault at Antelope 230kV Bus
N-1 OUTAGE: Antelope-Pardee 230kV Line
SYSTEM STABILITY CASE - A-P_N1_PrePEF.swt
PrePEF_High_SOM.sav + PrePEF.dyd + A-P_N1_PrePEF.swt
RUN 10.0
CC
CC   ***CALPINE PASTORIA ADD DYNAMIC STABILITY ASSESSMENT***
CC   APPLY A 3-PHASE FAULT ON THE ANTELOPE 230-KV BUS
FB   0.0 "ANTELOPE" 230
CC
CC   CLEAR FAULT IN 6 CYCLES
CFB  6.0 "ANTELOPE" 230
CC
CC   REMOVE ANTELOPE-PARDEE 230-KV LINE
DL   6.0 "ANTELOPE" 230. "PARDEE   " 230. "1 "
```

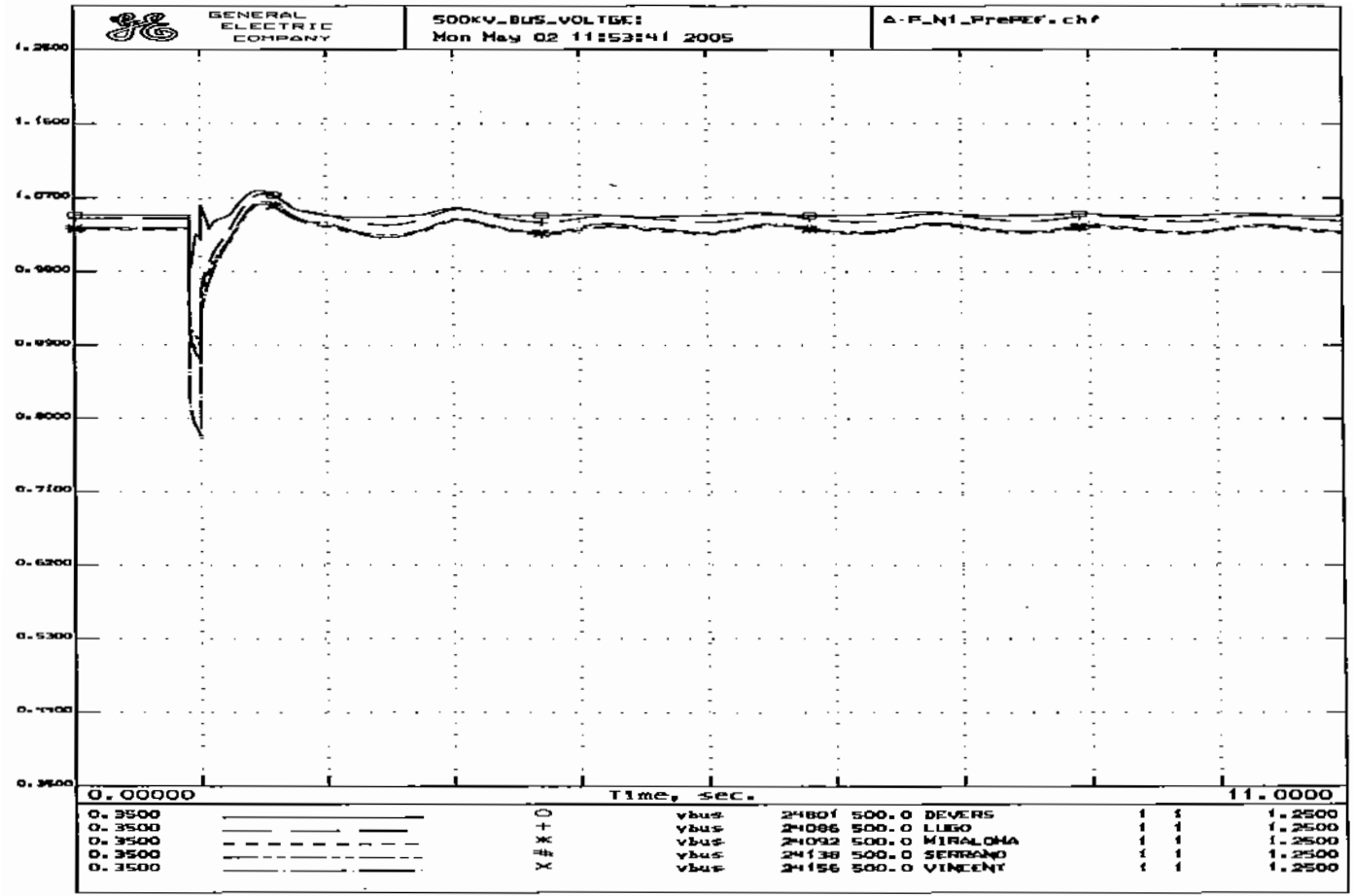
GENERAL ELECTRIC COMPANY
500KV_BUS_VOLTGE:
Mon May 02 11:53:41 2005
A-P_N1_PrePEF.chf
1.2500
1.1500
1.0500
0.9500
0.8500
0.7500
0.6500
0.5500
0.4500
0.3500
0.00000
Time, sec.
11.0000
0.3500 ○ vbus 24801 500.0 DEVERS 1 1 1.2500
0.3500 + vbus 24086 500.0 LUGO 1 1 1.2500
0.3500 * vbus 24092 500.0 MIRALOMA 1 1 1.2500
0.3500 # vbus 24138 500.0 SERRANO 1 1 1.2500
0.3500 × vbus 24156 500.0 VINCENT 1 1 1.2500

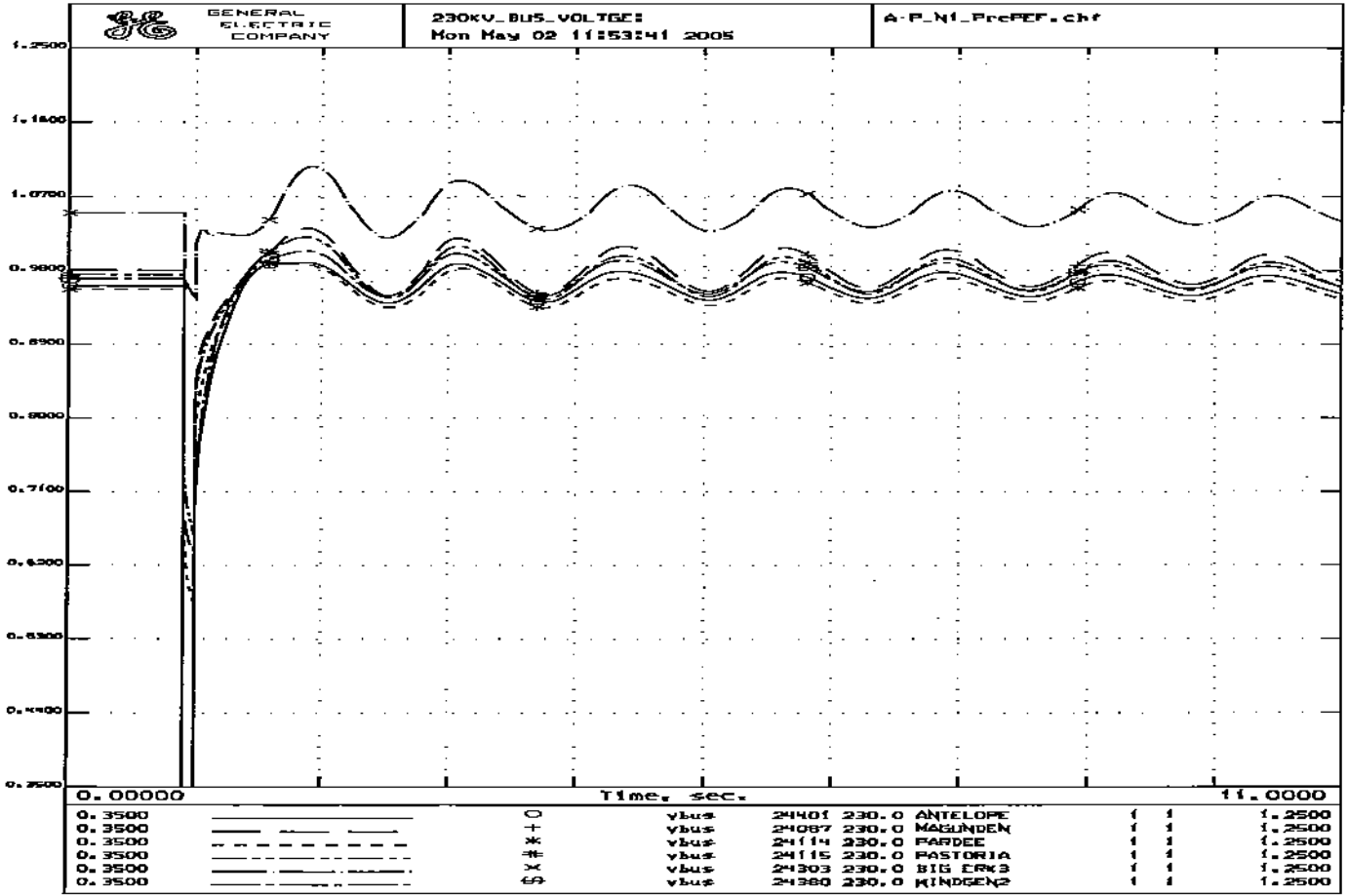
GENERAL ELECTRIC COMPANY
230KV_BUS_VOLTGE:
Mon May 02 11:53:41 2005
A-P_N1_PrePEF.chf
1.2500
1.1400
1.0700
0.9800
0.8900
0.8000
0.7100
0.6200
0.5300
0.4400
0.2500
0.00000
Time, sec.
11.0000
0.3500 ○ vbus 24401 230.0 ANTELOPE 1 1 1.2500
0.3500 + vbus 24087 230.0 MAGUNDEN 1 1 1.2500
0.3500 * vbus 24114 230.0 PARDEE 1 1 1.2500
0.3500 # vbus 24115 230.0 PASTORIA 1 1 1.2500
0.3500 × vbus 24303 230.0 BIG EAK3 1 1 1.2500
0.3500 vbus 24380 230.0 WINDGEN2 1 1 1.2500

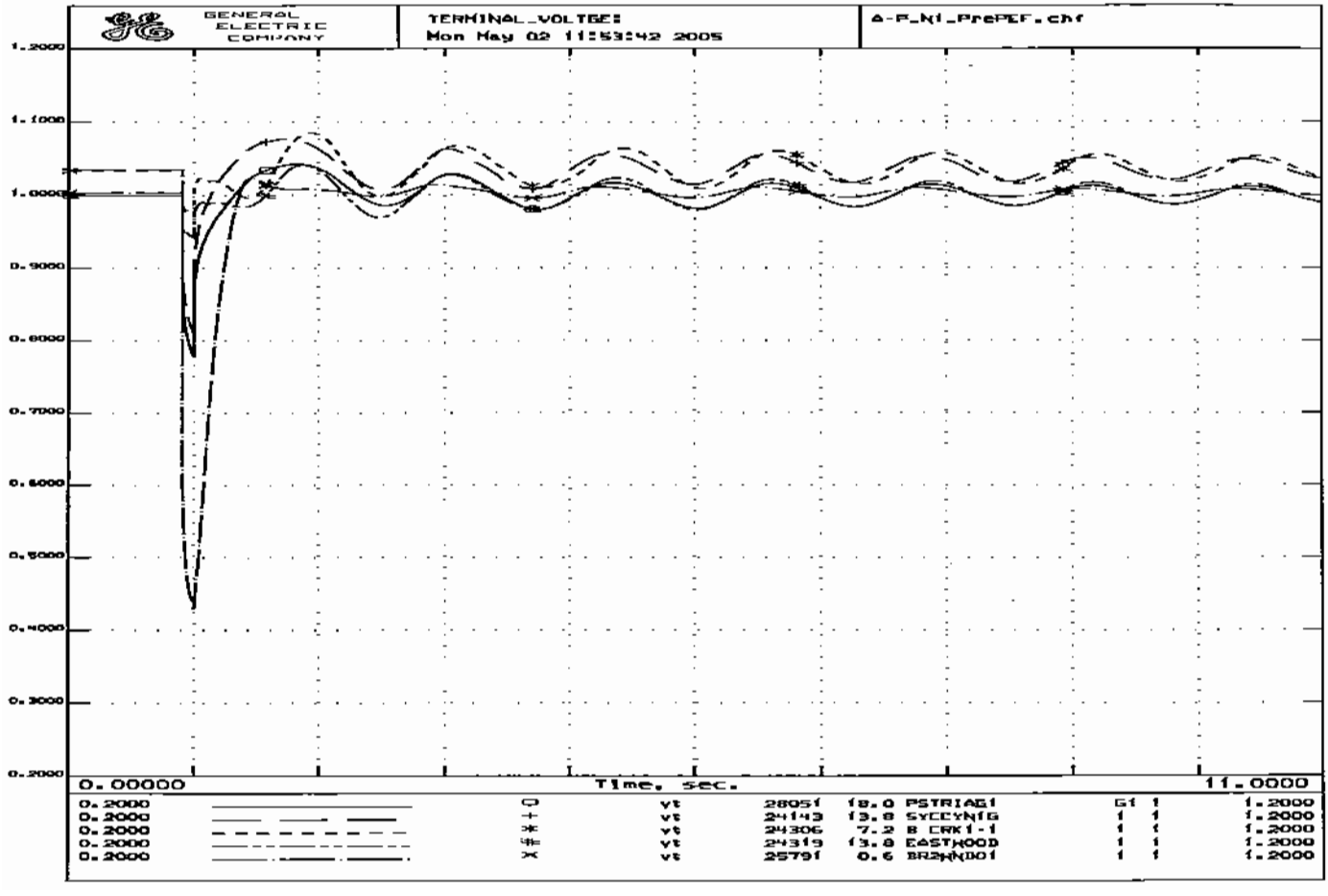
GENERAL ELECTRIC COMPANY
TERMINAL_VOLTGE:
Mon May 02 11:53:42 2005
A-P_N1_PrePEF.chf
1.2000
1.1000
1.0000
0.9000
0.8000
0.7000
0.6000
0.5000
0.4000
0.3000
0.2000
0.00000
Time, sec.
11.0000
0.2000 vt 28051 18.0 PSTRIAG1 G1 1 1.2000
0.2000 vt 24143 13.8 SYCCYNIG 1 1 1.2000
0.2000 vt 24306 7.2 B CRK1-1 1 1 1.2000
0.2000 vt 24319 13.8 EASTWOOD 1 1 1.2000
0.2000 vt 25791 0.6 BRENNDO1 1 1 1.2000

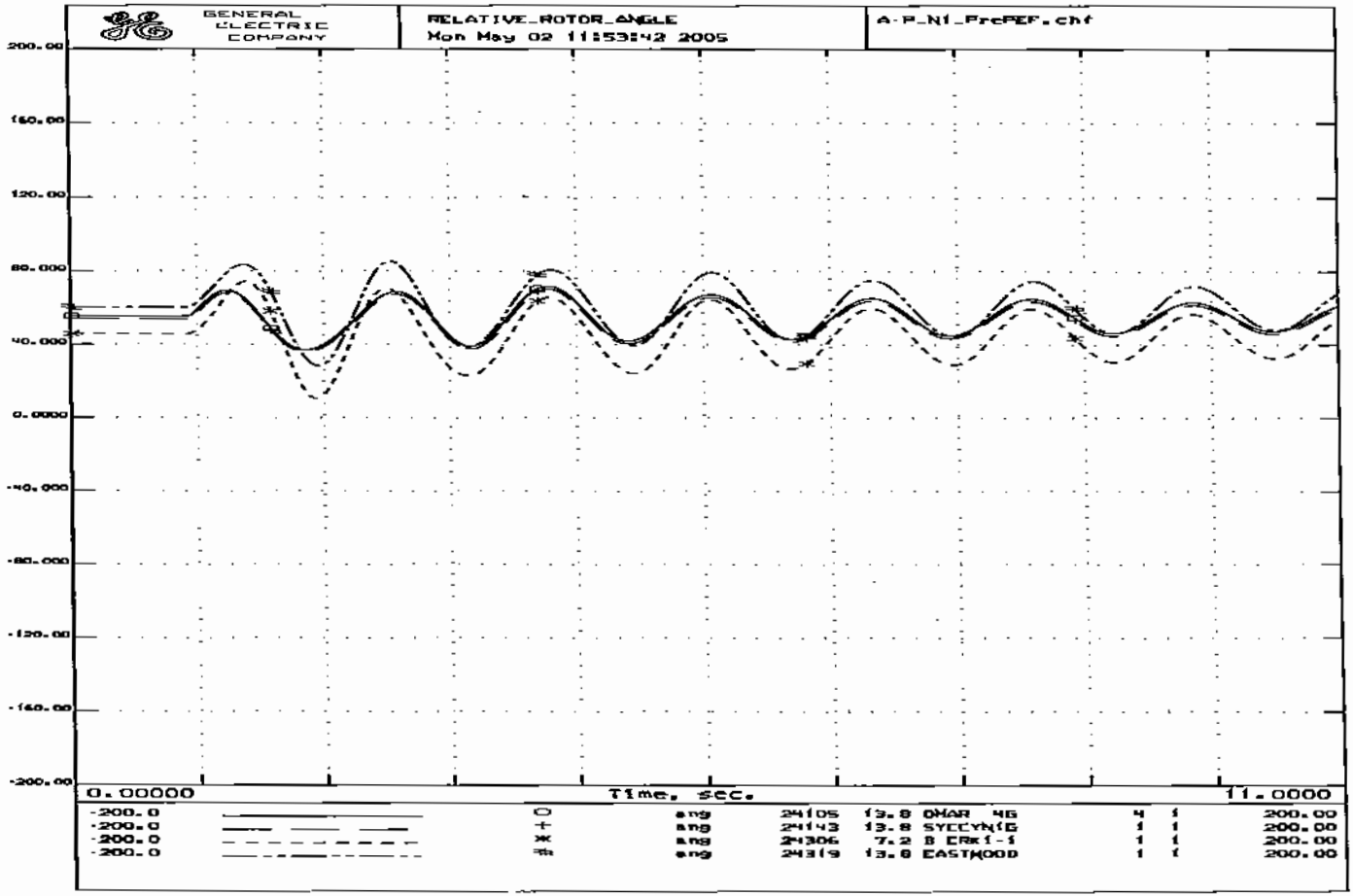
GENERAL ELECTRIC COMPANY
RELATIVE_ROTOR_ANGLE
Mon May 02 11:53:42 2005
A-F_N1_PrePEF.chf
200.00
160.00
120.00
80.000
40.000
0.0000
-40.000
-80.000
-120.00
-160.00
-200.00
0.00000
Time, sec.
11.0000
-200.0 ang 24105 13.8 OMAR 4G 4 1 200.00
-200.0 ang 24143 13.8 SYCCYN(G 1 1 200.00
-200.0 ang 24306 7.2 B ERK1-1 1 1 200.00
-200.0 ang 24319 13.8 EASTWOOD 1 1 200.00

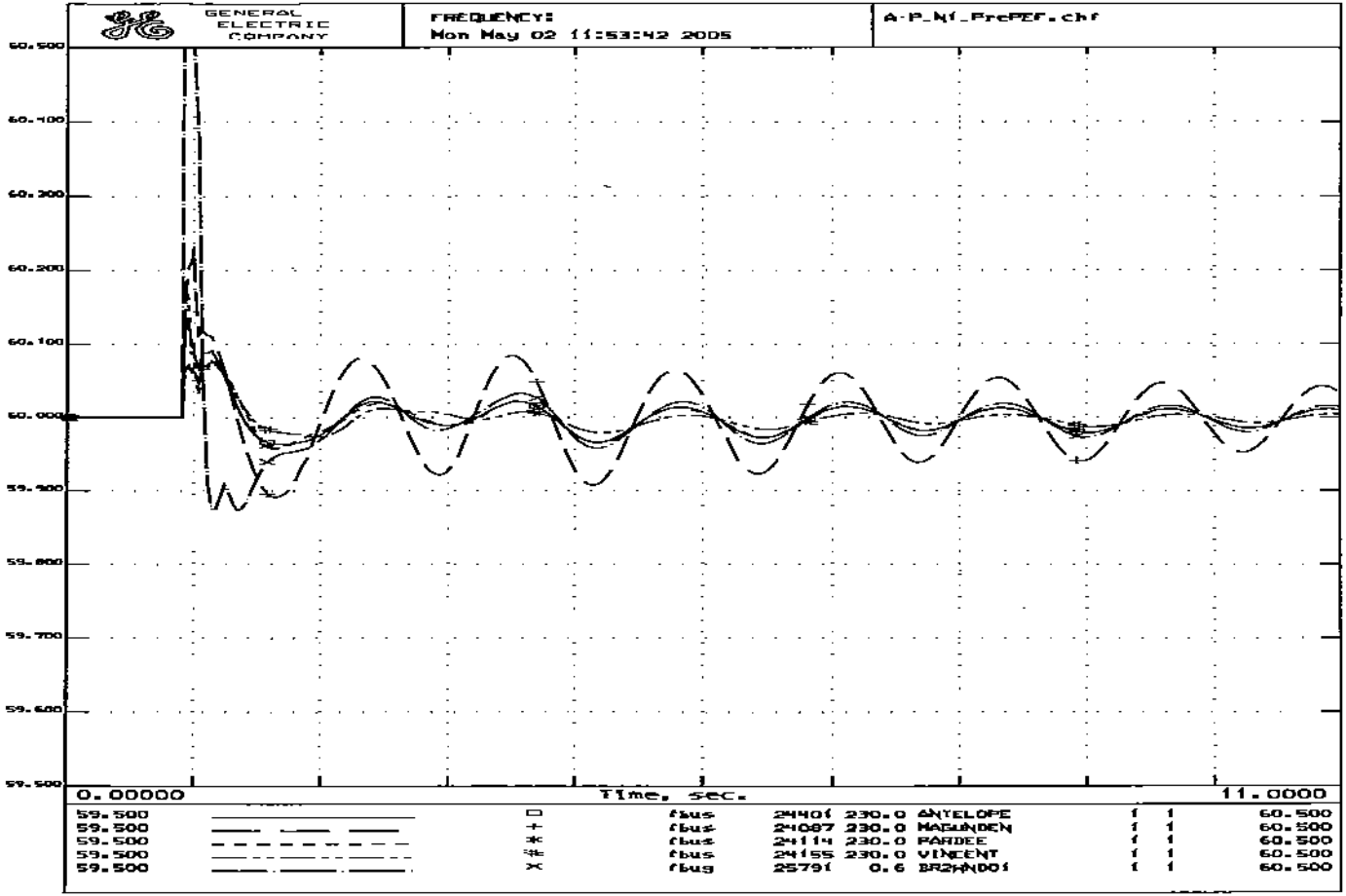
GENERAL ELECTRIC COMPANY
FREQUENCY:
Mon May 02 11:53:42 2005
A-P_Nf_PrePEF.chf
60.500
60.400
60.300
60.200
60.100
60.000
59.900
59.800
59.700
59.600
59.500
0.00000
Time, sec.
11.0000
59.500 □ fbus 24401 230.0 ANTELOPE 1 1 60.500
59.500 + fbus 24087 230.0 MAGUNDEN 1 1 60.500
59.500 * fbus 24114 230.0 PARDEE 1 1 60.500
59.500 # fbus 24155 230.0 VINCENT 1 1 60.500
59.500 × fbus 25791 0.6 BRZWNDO1 1 1 60.500

```
PrePEF_High_SOM.sav
PrePEF.dyd
TITLE
Calpine Pastoria Add Stability Study: Loss of One 230-KV Line
6-CYCLE 3-Phase Fault at Antelope 230kV Bus
N-1 OUTAGE: New Vincent-Antelope 230kV Line
SYSTEM STABILITY CASE - A-V_N1_PrePEF.swt
PrePEF_High_SOM.sav + PrePEF.dyd + A-V_N1_PrePEF.swt
RUN 10.0
CC
CC   ***CALPINE PASTORIA ADD DYNAMIC STABILITY ASSESSMENT***
CC   APPLY A 3-PHASE FAULT ON THE ANTELOPE 230-KV BUS
FB   0.0 "ANTELOPE" 230
CC
CC   CLEAR FAULT IN 6 CYCLES
CFB  6.0 "ANTELOPE" 230
CC
CC   REMOVE NEW VINCENT-ANTELOPE 230-KV LINE
DL   6.0 "VINCENT " 230, "ANTELOPE" 230, "2 "
```

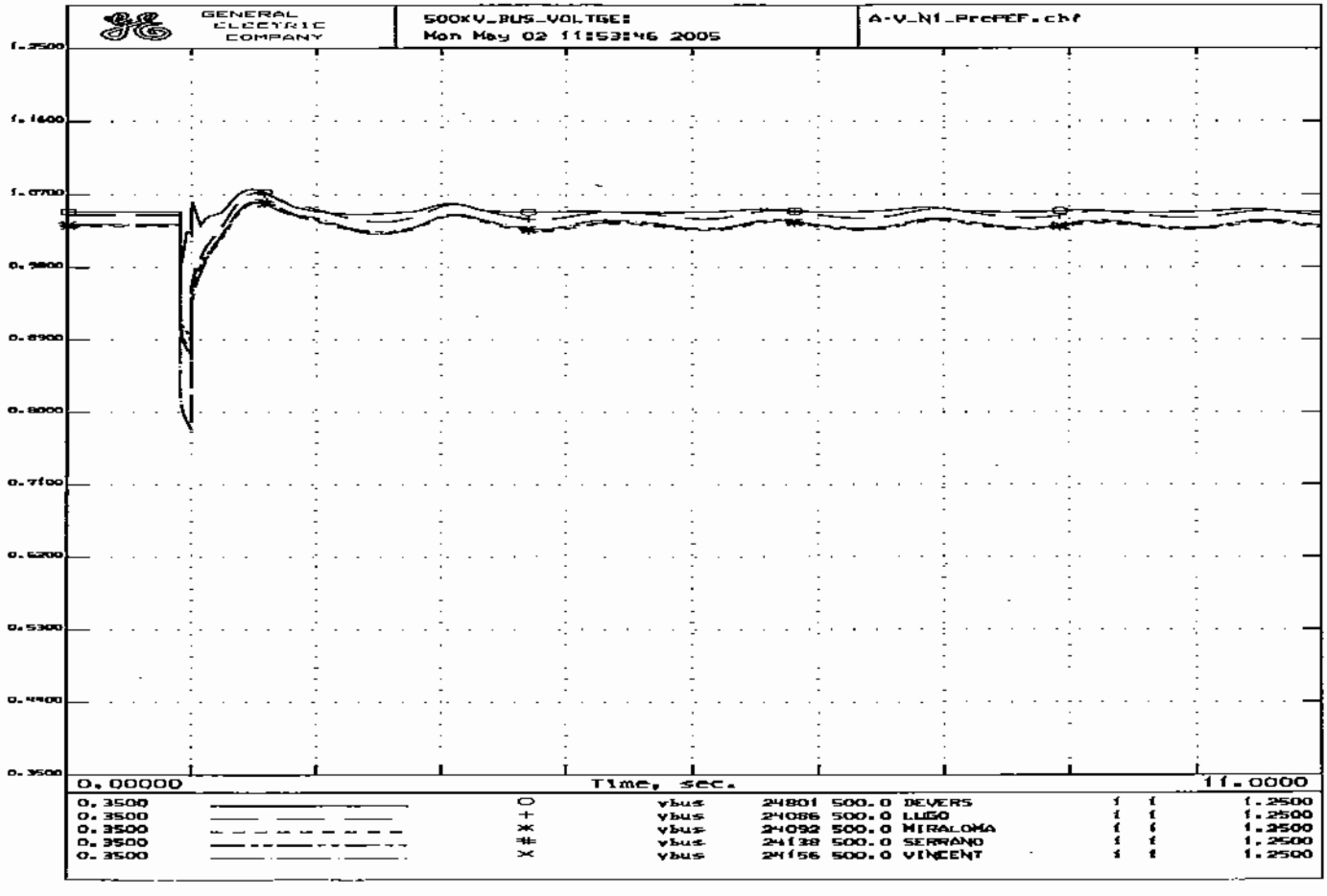
GENERAL ELECTRIC COMPANY
500KV_BUS_VOLTGE:
Mon May 02 11:53:46 2005
A-V_N1_PrePEF.chf
1.2500
1.1600
1.0700
0.9800
0.8900
0.8000
0.7100
0.6200
0.5300
0.4400
0.3500
0.00000
Time, sec.
11.0000
0.3500 ○ vbus 24801 500.0 DEVERS 1 1 1.2500
0.3500 + vbus 24086 500.0 LUGO 1 1 1.2500
0.3500 ✕ vbus 24092 500.0 MIRALOMA 1 1 1.2500
0.3500 # vbus 24138 500.0 SERRANO 1 1 1.2500
0.3500 ✕ vbus 24156 500.0 VINCENT 1 1 1.2500

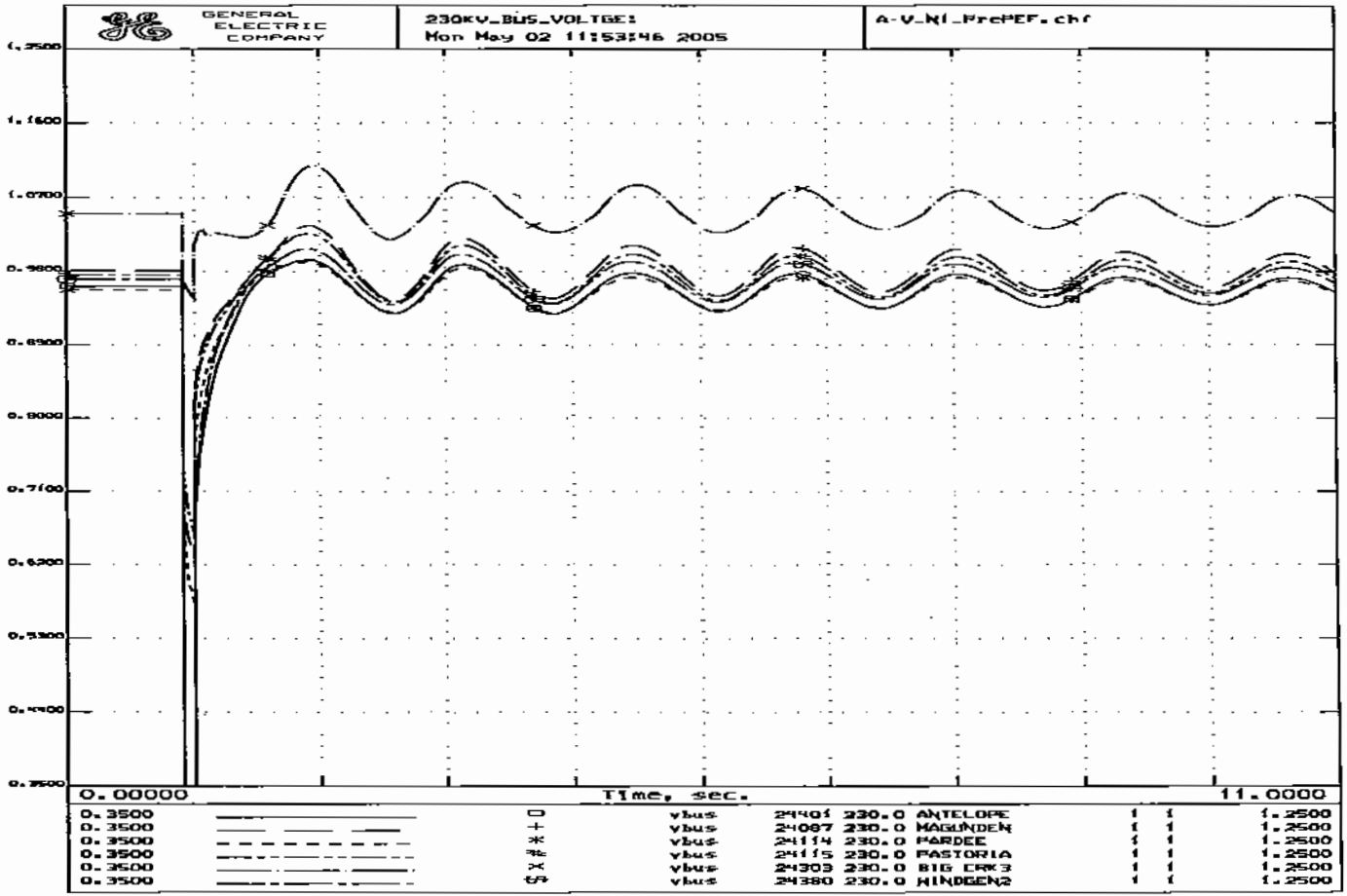
GENERAL ELECTRIC COMPANY
230KV_BUS_VOLTGE:
Mon May 02 11:53:46 2005
A-V_N1_PrePEF.chf
1.2500
1.1600
1.0700
0.9800
0.8900
0.8000
0.7100
0.6200
0.5300
0.4400
0.3500
0.00000
Time, sec.
11.0000
0.3500 vbus 24401 230.0 ANTELOPE 1 1 1.2500
0.3500 vbus 24087 230.0 MAGUNDEN 1 1 1.2500
0.3500 vbus 24114 230.0 MARDEE 1 1 1.2500
0.3500 vbus 24115 230.0 PASTORIA 1 1 1.2500
0.3500 vbus 24303 230.0 BIG ERK3 1 1 1.2500
0.3500 vbus 24380 230.0 WINDGEN2 1 1 1.2500

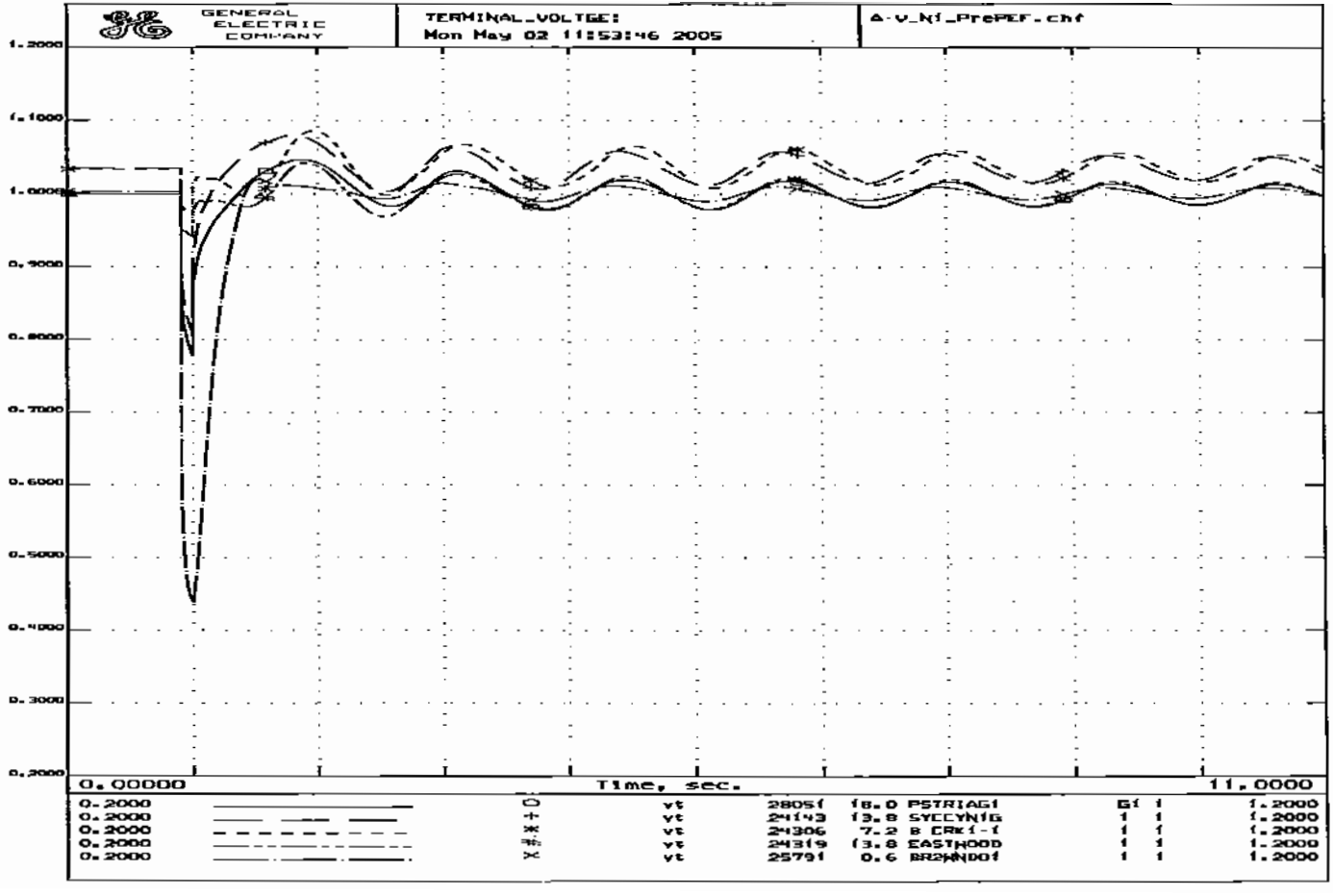
GENERAL ELECTRIC COMPANY
TERMINAL_VOLTGE:
Mon May 02 11:53:46 2005
Δ-V_N1_PrePEF.chf
1.2000
1.1000
1.0000
0.9000
0.8000
0.7000
0.6000
0.5000
0.4000
0.3000
0.2000
0.00000
Time, sec.
11.0000
0.2000 ○ vt 28051 18.0 PSTRIAG1 G1 1 1.2000
0.2000 + vt 24143 13.8 SYCCYN1G 1 1 1.2000
0.2000 ✱ vt 24306 7.2 B CRK1-1 1 1 1.2000
0.2000 # vt 24319 13.8 EASTWOOD 1 1 1.2000
0.2000 × vt 25791 0.6 BR2WNDO1 1 1 1.2000

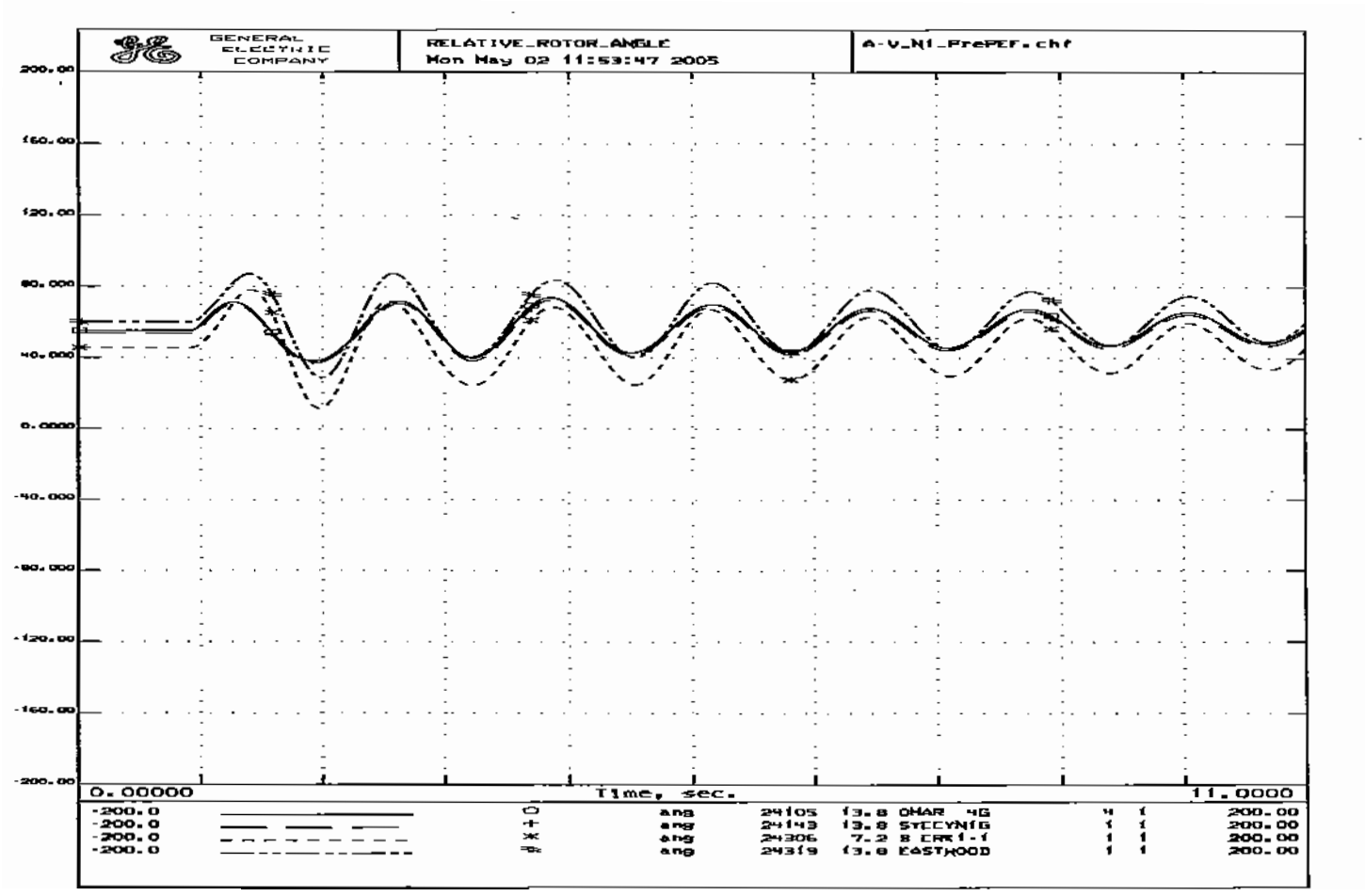
GENERAL ELECTRIC COMPANY
RELATIVE_ROTOR_ANGLE
Mon May 02 11:53:47 2005
A-V_N1_PrePEF.chf
200.00
160.00
120.00
80.000
40.000
0.0000
-40.000
-80.000
-120.00
-160.00
-200.00
0.00000
Time, sec.
11.0000
-200.0 ang 24105 13.8 OMAR 4G 4 1 200.00
-200.0 ang 24143 13.8 STECYN1G 1 1 200.00
-200.0 ang 24306 7.2 8 ERK1-1 1 1 200.00
-200.0 ang 24319 13.8 EASTWOOD 1 1 200.00

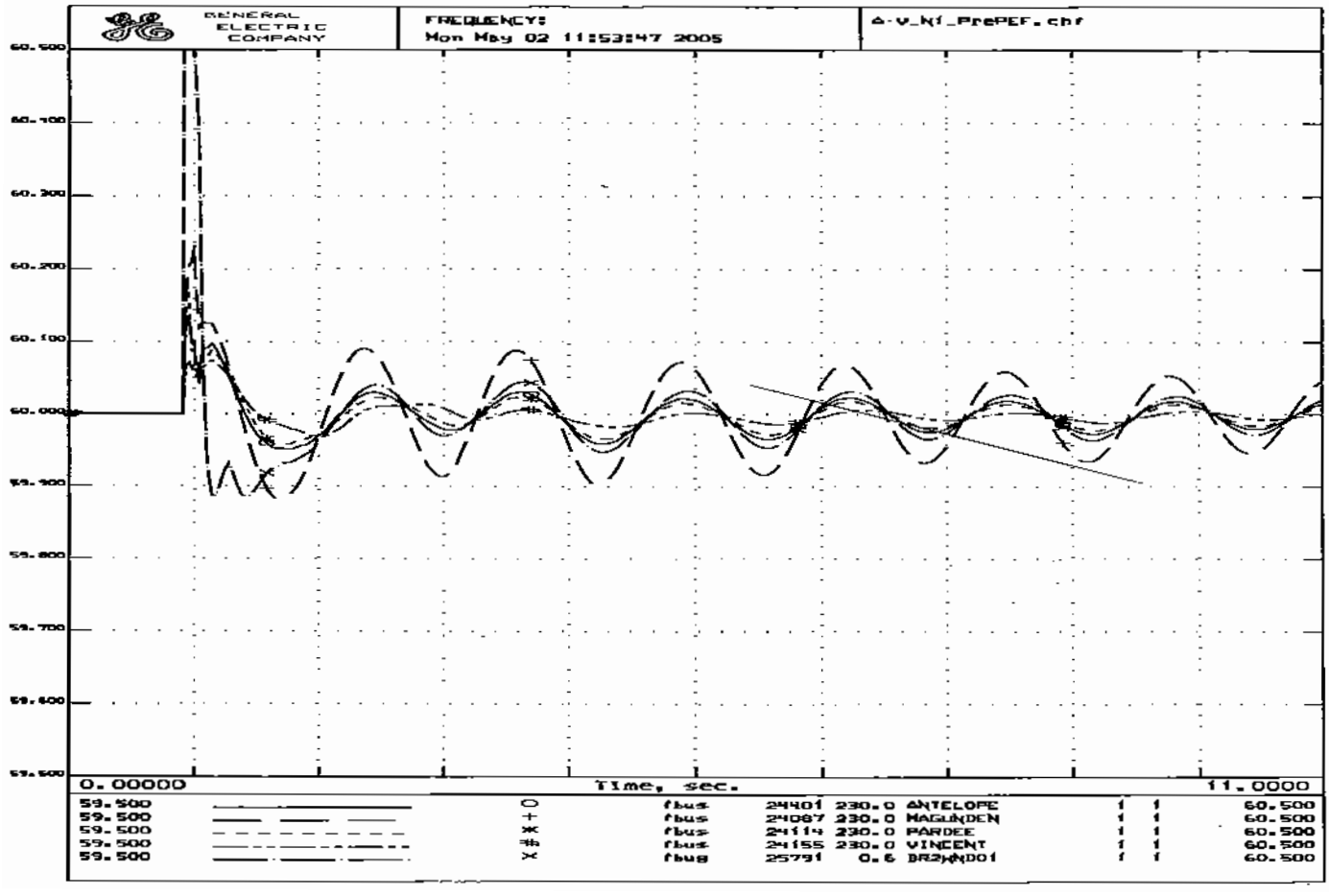
GENERAL ELECTRIC COMPANY
FREQUENCY:
Mon May 02 11:53:47 2005
Δ-v_kf_PrePEF.chf
60.500
60.400
60.300
60.200
60.100
60.000
59.900
59.800
59.700
59.600
59.500
0.00000
Time, sec.
11.0000
59.500 ○ fbus 24401 230.0 ANTELOPE 1 1 60.500
59.500 + fbus 24087 230.0 MAGUNDEN 1 1 60.500
59.500 ✳ fbus 24114 230.0 PARDEE 1 1 60.500
59.500 # fbus 24155 230.0 VINCENT 1 1 60.500
59.500 × fbus 25791 0.6 BR2WND01 1 1 60.500

```
PrePEF_High_SOM.sav
PrePEF.dyd
TITLE
Calpine Pastoria Add Stability Study: Loss of One 230-KV Line
6-CYCLE 3-Phase Fault at Antelope 230kV Bus
N-1 OUTAGE: Magunden-Windgen2 230kV Line
SYSTEM STABILITY CASE - A-W2_N1_PrePEF.swt
PrePEF_High_SOM.sav + PrePEF.dyd + A-W2_N1_PrePEF.swt
RUN 10.0
CC
CC   ***CALPINE PASTORIA ADD DYNAMIC STABILITY ASSESSMENT***
CC   APPLY A 3-PHASE FAULT ON THE ANTELOPE 230-KV BUS
FB   0.0 "ANTELOPE" 230
CC
CC   CLEAR FAULT IN 6 CYCLES
CFB  6.0 "ANTELOPE" 230
CC
CC   REMOVE ANTELOPE-WINDGEN2 230-KV LINE
DL   6.0 "MAGUNDEN" 230. "WINDGEN2" 230. "1 "
```

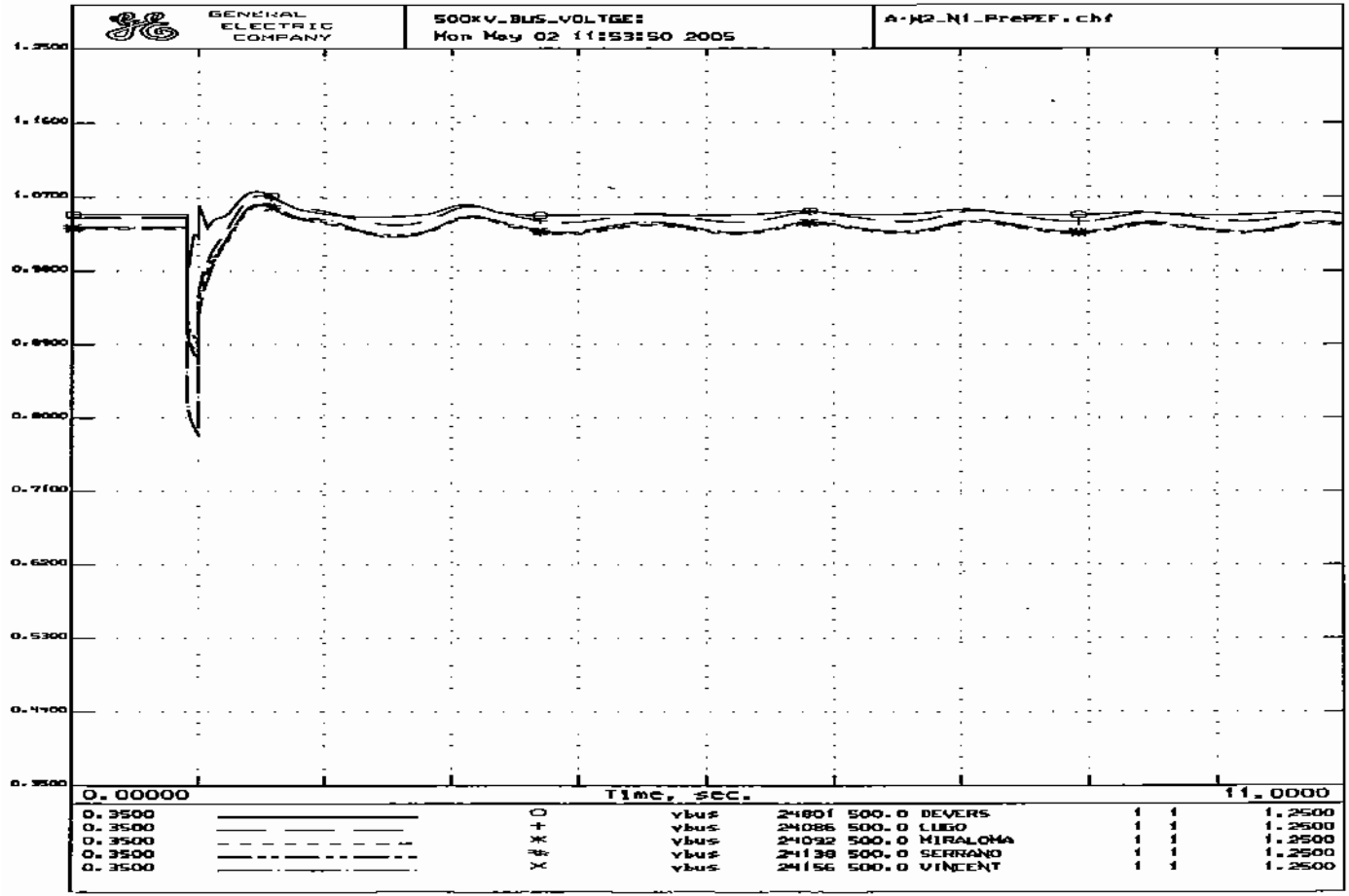
GENERAL ELECTRIC COMPANY
500kV_BUS_VOLTGE:
Mon May 02 11:53:50 2005
A-W2_N1_PrePEF.chf
1.2500
1.1600
1.0700
0.9800
0.8900
0.8000
0.7100
0.6200
0.5300
0.4400
0.3500
0.00000
Time, sec.
11.0000
0.3500 ○ vbus 24801 500.0 DEVERS 1 1 1.2500
0.3500 + vbus 24086 500.0 LUGO 1 1 1.2500
0.3500 * vbus 24092 500.0 MIRALOMA 1 1 1.2500
0.3500 # vbus 24138 500.0 SERRANO 1 1 1.2500
0.3500 × vbus 24156 500.0 VINCENT 1 1 1.2500

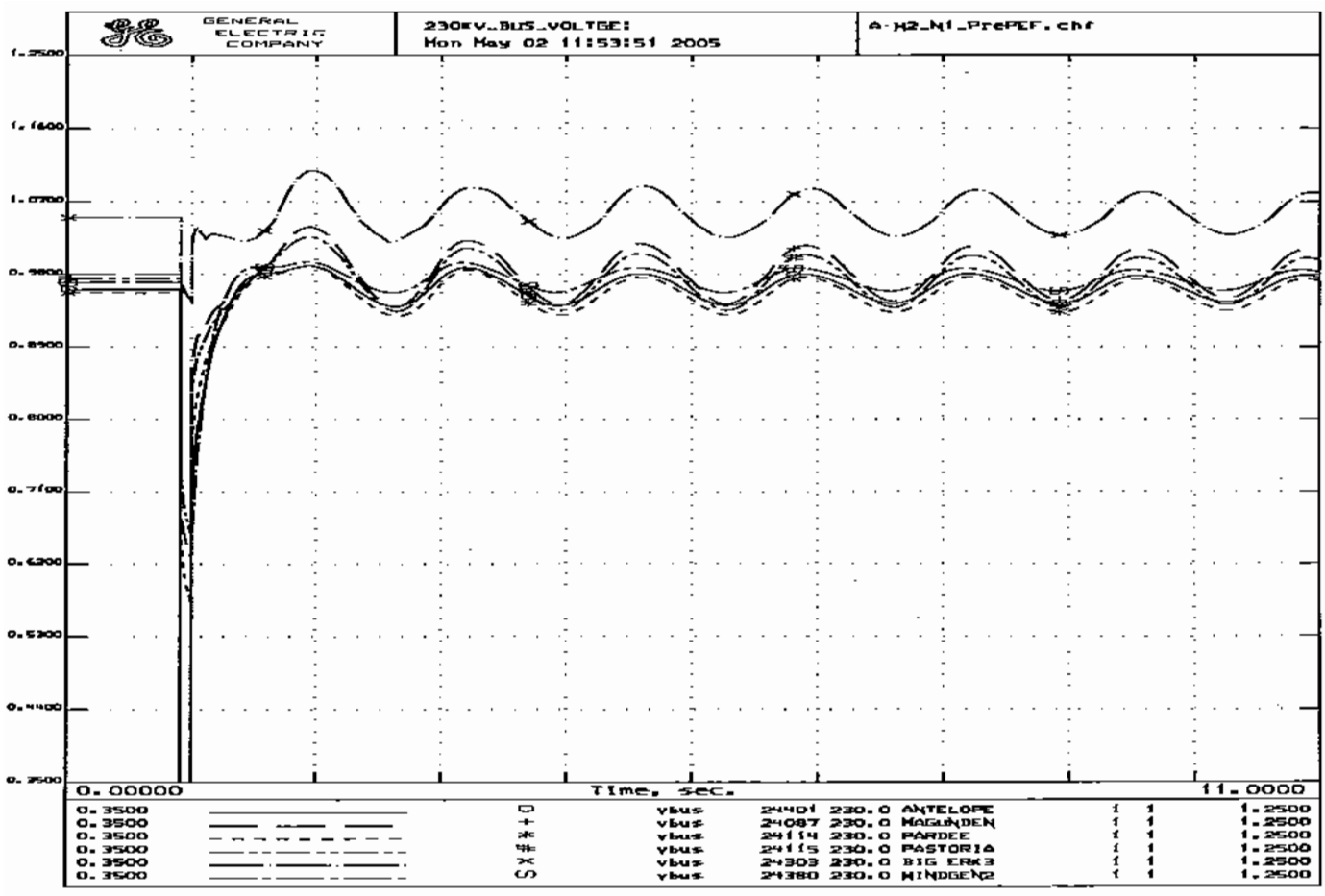
GENERAL ELECTRIC COMPANY
230KV_BUS_VOLTGE:
Mon May 02 11:53:51 2005
A-H2_N1_PrePEF.chf
1.2500
1.1600
1.0700
0.9800
0.8900
0.8000
0.7100
0.6200
0.5300
0.4400
0.2500
0.00000
Time, sec.
11.0000
0.3500 vbus 24401 230.0 ANTELOPE 1 1 1.2500
0.3500 vbus 24087 230.0 MAGUNDEN 1 1 1.2500
0.3500 vbus 24114 230.0 PARDEE 1 1 1.2500
0.3500 vbus 24115 230.0 PASTORIA 1 1 1.2500
0.3500 vbus 24303 230.0 BIG ERK3 1 1 1.2500
0.3500 vbus 24380 230.0 MINDGEN2 1 1 1.2500

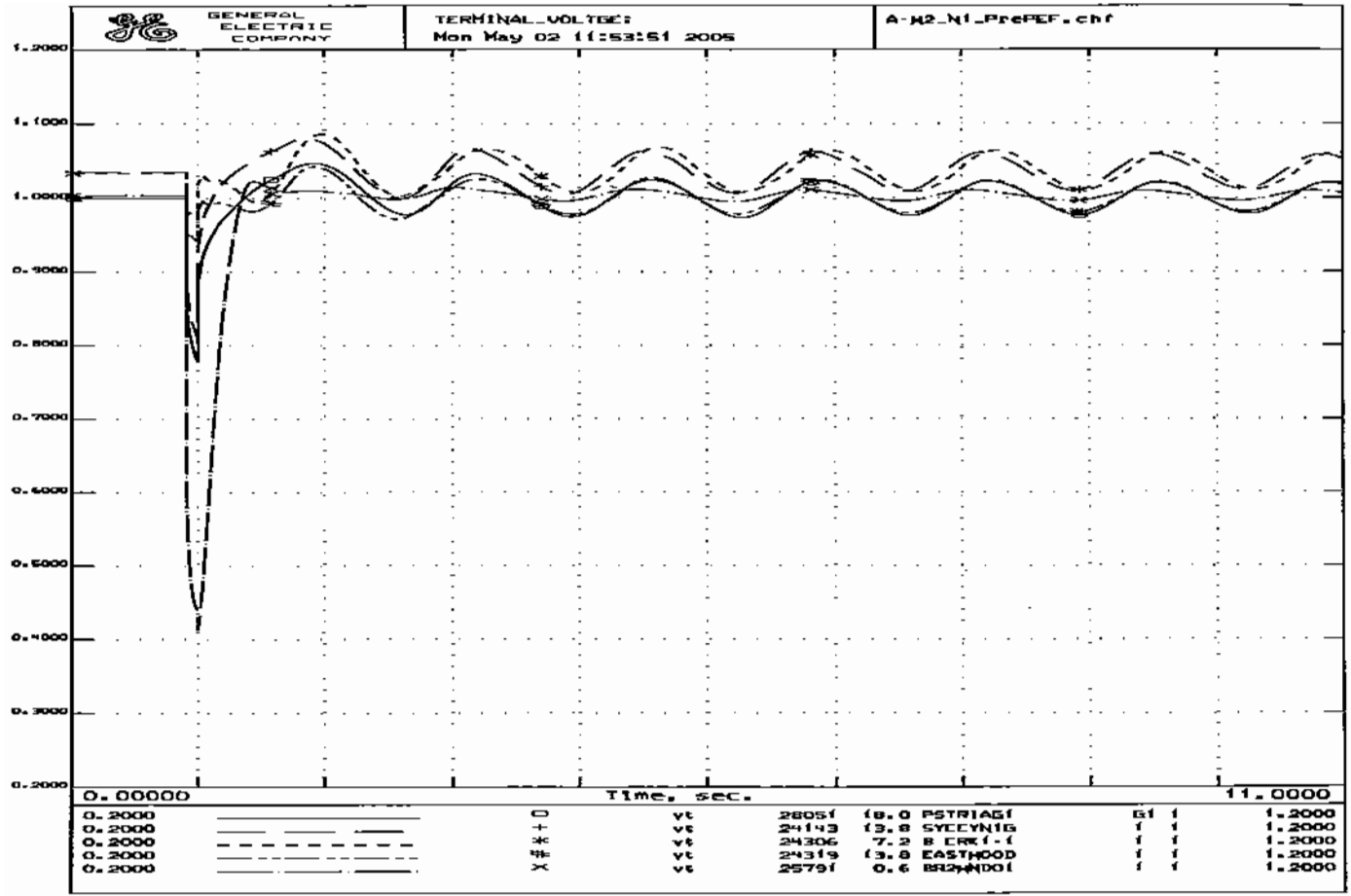
GENERAL ELECTRIC COMPANY
TERMINAL_VOLTGE:
Mon May 02 11:53:51 2005
A-W2_N1_PrePEF.chf
1.2000
1.1000
1.0000
0.9000
0.8000
0.7000
0.6000
0.5000
0.4000
0.3000
0.2000
0.00000
Time, sec.
11.0000
0.2000 ○ vt 28051 18.0 PSTRIAG1 G1 1 1.2000
0.2000 + vt 24143 13.8 SYCCYN1G 1 1 1.2000
0.2000 * vt 24306 7.2 B CRK1-1 1 1 1.2000
0.2000 # vt 24319 13.8 EASTWOOD 1 1 1.2000
0.2000 × vt 25791 0.6 BR2WNDO1 1 1 1.2000

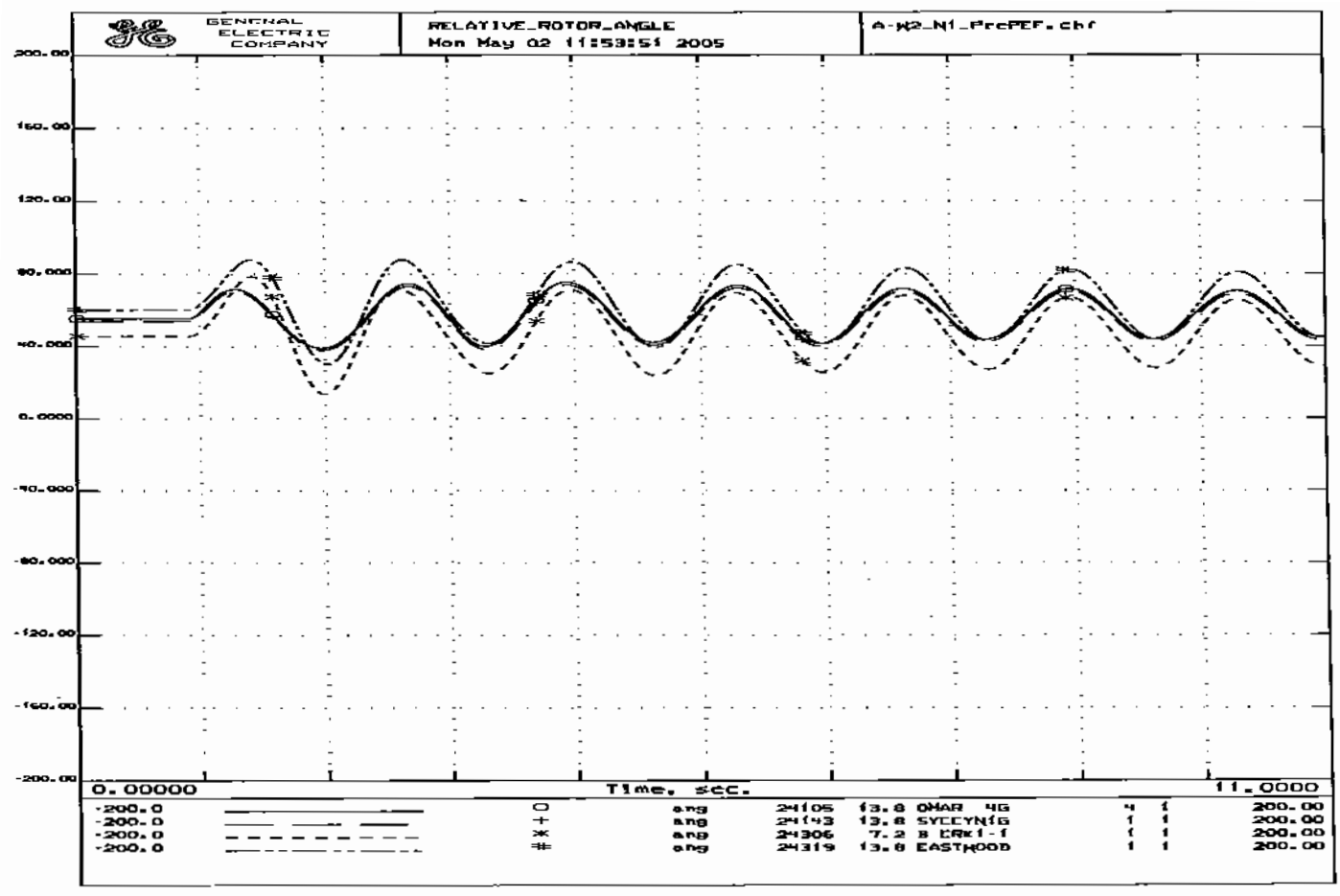
GENERAL ELECTRIC COMPANY
RELATIVE_ROTOR_ANGLE
Mon May 02 11:53:51 2005
A-W2_N1_PrcPEF.chf
200.00
160.00
120.00
80.000
40.000
0.0000
-40.000
-80.000
-120.00
-160.00
-200.00
0.00000
Time, sec.
11.0000
-200.0 ang 24105 13.8 OMAR 4G 4 1 200.00
-200.0 ang 24143 13.8 SYCCYN1G 1 1 200.00
-200.0 ang 24306 7.2 B ERK1-1 1 1 200.00
-200.0 ang 24319 13.8 EASTWOOD 1 1 200.00

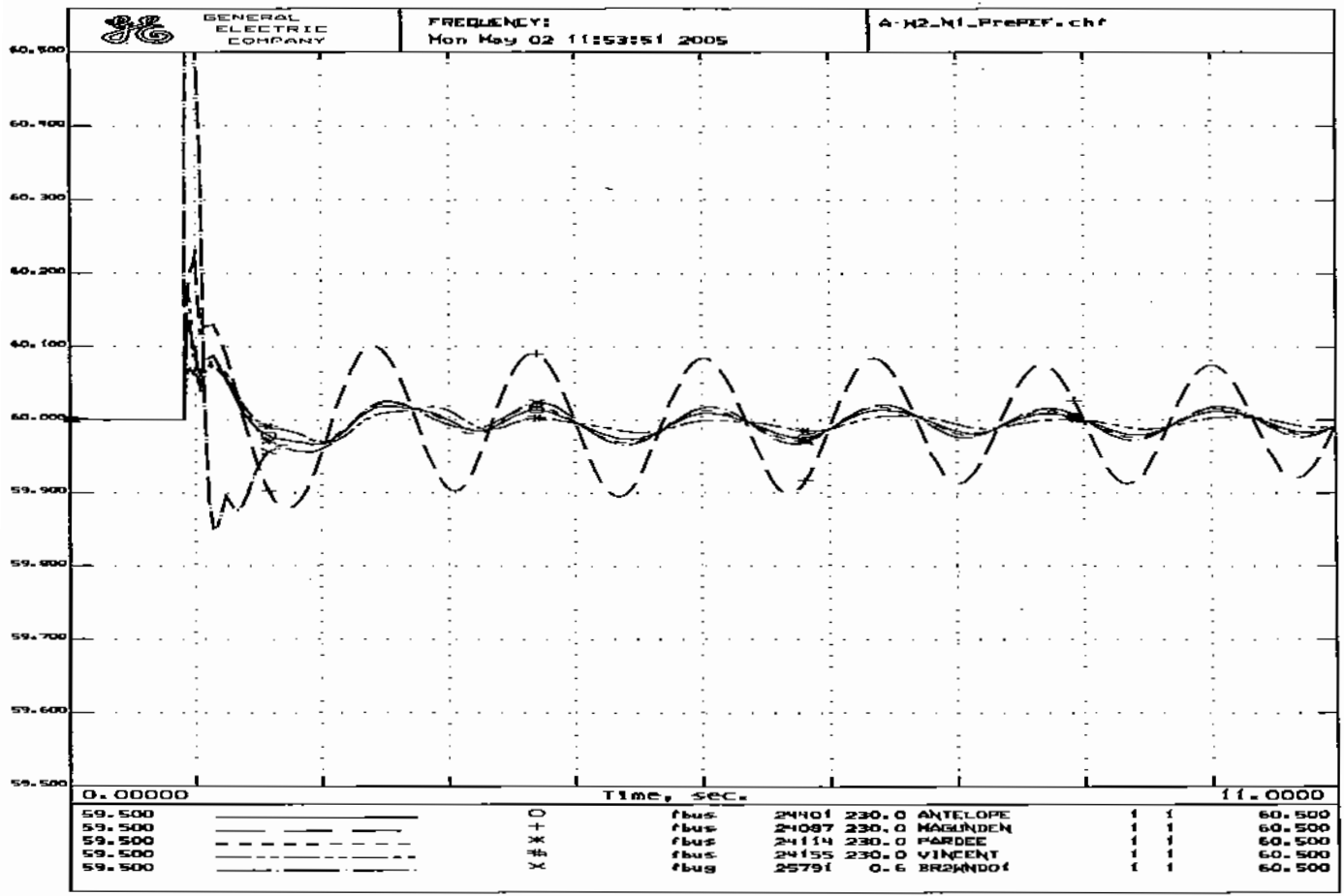
GENERAL ELECTRIC COMPANY
FREQUENCY:
Mon May 02 11:53:51 2005
A-M2_N1_PrePEF.chf
60.500
60.400
60.300
60.200
60.100
60.000
59.900
59.800
59.700
59.600
59.500
0.00000
Time, sec.
11.0000
59.500 O fbus 24401 230.0 ANTELOPE 1 1 60.500
59.500 + fbus 24087 230.0 MAGUNDEN 1 1 60.500
59.500 * fbus 24114 230.0 PARDEE 1 1 60.500
59.500 # fbus 24155 230.0 VINCENT 1 1 60.500
59.500 X fbus 25791 0.6 BR2WNDOF 1 1 60.500

```
PrePEF_High_SOM.sav
PrePEF.dyd
TITLE
Calpine Pastoria Add Stability Study: Loss of One 230-KV Line
6-CYCLE 3-Phase Fault at Bailey 230kV Bus
N-1 OUTAGE: Bailey-Pastoria 230kV Line
SYSTEM STABILITY CASE - B-Pas_N1_PrePEF.swt
PrePEF_High_SOM.sav + PrePEF.dyd + B-Pas_N1_PrePEF.swt
RUN 10.0
CC
CC   ***CALPINE PASTORIA ADD DYNAMIC STABILITY ASSESSMENT***
CC   APPLY A 3-PHASE FAULT ON THE BAILEY 230-KV BUS
FB   0.0 "BAILEY   " 230
CC
CC   CLEAR FAULT IN 6 CYCLES
CPH 6.0 "BAILEY   " 230
CC
CC   REMOVE BAILEY-PASTORIA 230-KV LINE
DL   6.0 "BAILEY   " 230. "PASTORIA" 230. "1 "
```

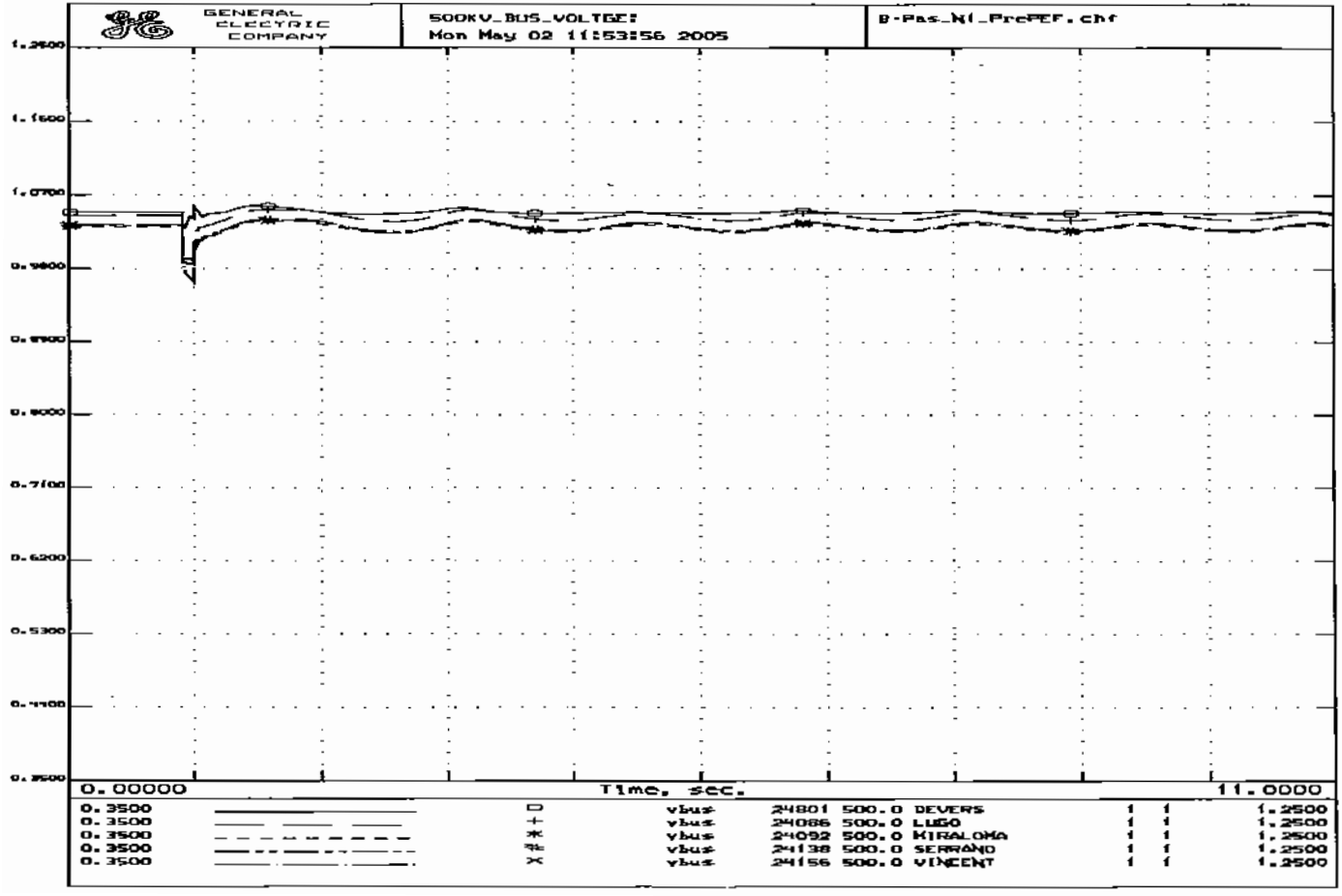
GENERAL ELECTRIC COMPANY
500KV_BUS_VOLTGE:
Mon May 02 11:53:56 2005
B-Pas_N1_PrePEF.chf
1.2500
1.1500
1.0500
0.9500
0.8500
0.7500
0.6500
0.5500
0.4500
0.3500
0.00000
Time, sec.
11.0000
0.3500 □ vbus 24801 500.0 DEVERS 1 1 1.2500
0.3500 + vbus 24086 500.0 LUGO 1 1 1.2500
0.3500 * vbus 24092 500.0 MIRALOMA 1 1 1.2500
0.3500 * vbus 24138 500.0 SERRANO 1 1 1.2500
0.3500 × vbus 24156 500.0 VINCENT 1 1 1.2500

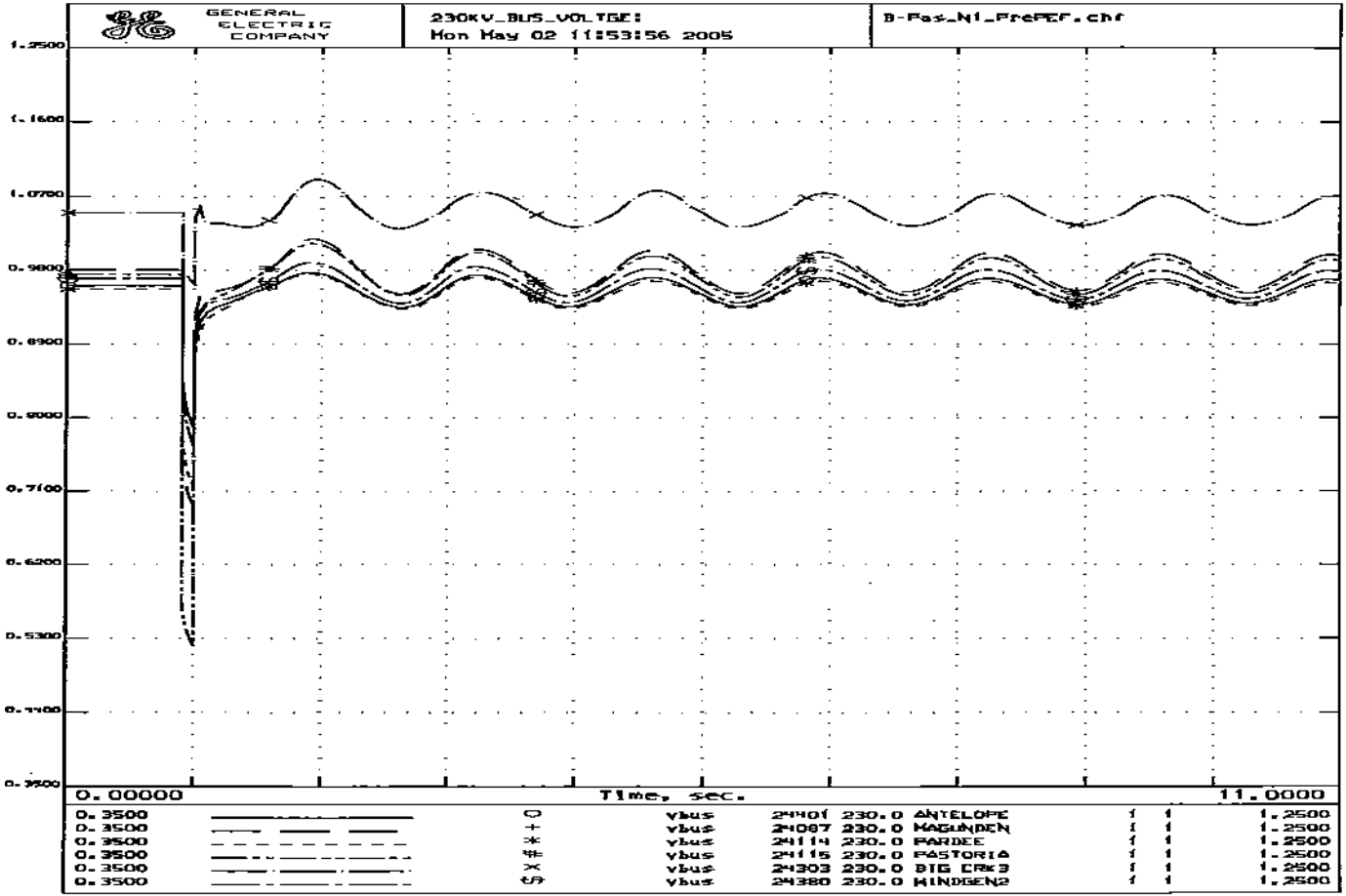
GENERAL ELECTRIC COMPANY
230KV_BUS_VOLTGE:
Mon May 02 11:53:56 2005
B-Fas_N1_FrePEF.chf
1.2500
1.1600
1.0700
0.9800
0.8900
0.8000
0.7100
0.6200
0.5300
0.4400
0.3500
0.00000
Time, sec.
11.0000
0.3500 ○ vbus 24401 230.0 ANTELOPE 1 1 1.2500
0.3500 + vbus 24087 230.0 MAGUNDEN 1 1 1.2500
0.3500 * vbus 24114 230.0 PARDEE 1 1 1.2500
0.3500 # vbus 24115 230.0 PASTORIA 1 1 1.2500
0.3500 × vbus 24303 230.0 BIG CR#3 1 1 1.2500
0.3500 vbus 24380 230.0 WINDGEN2 1 1 1.2500

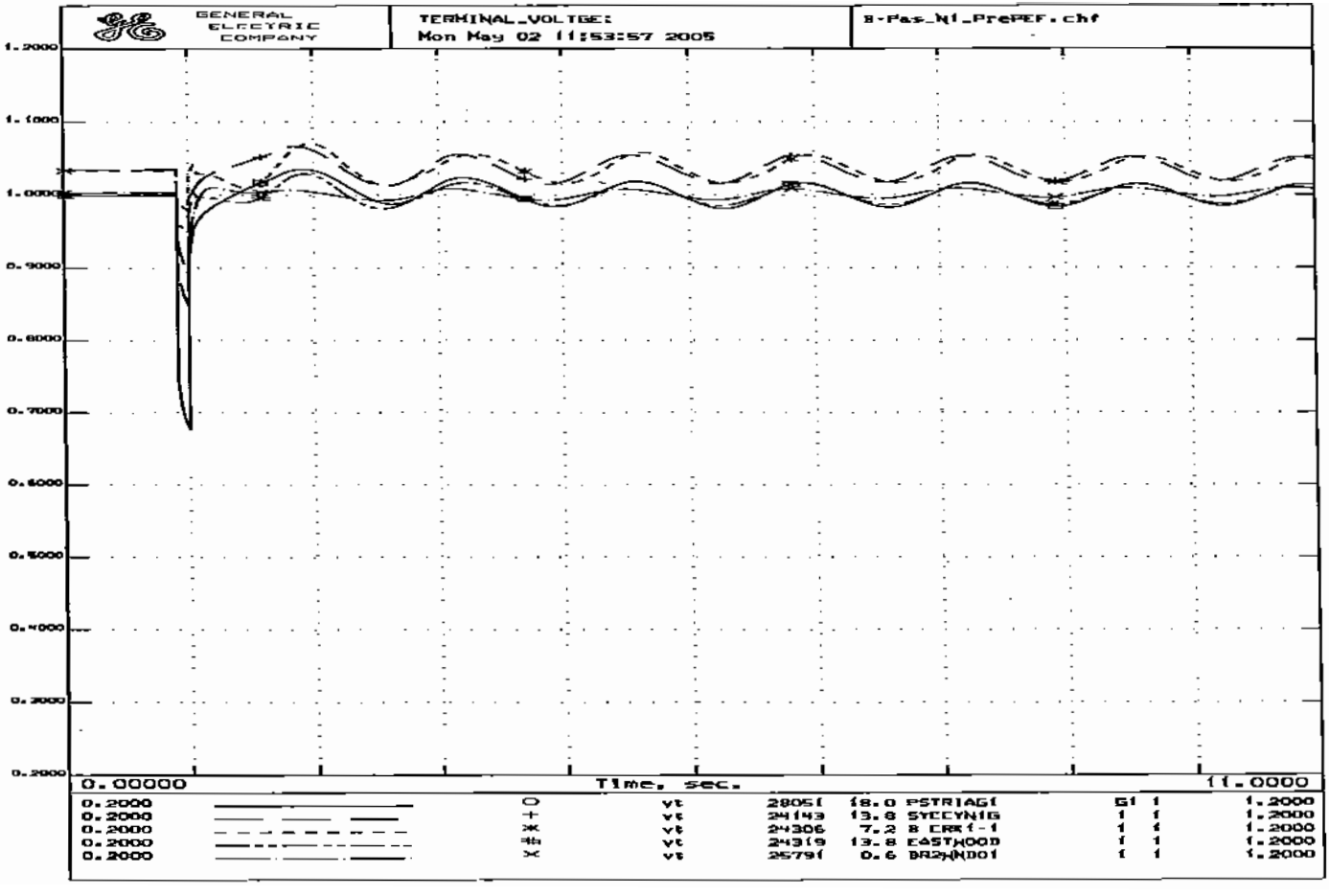
GENERAL ELECTRIC COMPANY
TERMINAL_VOLTGE:
Mon May 02 11:53:57 2005
8-Pas_N1_PrePEF.chf
1.2000
1.1000
1.0000
0.9000
0.8000
0.7000
0.6000
0.5000
0.4000
0.3000
0.2000
0.00000
Time, sec.
11.0000
0.2000 ○ vt 28051 18.0 PSTRIAG1 G1 1 1.2000
0.2000 + vt 24143 13.8 SYCCYN1G 1 1 1.2000
0.2000 ✳ vt 24306 7.2 8 CRK1-1 1 1 1.2000
0.2000 # vt 24319 13.8 EASTWOOD 1 1 1.2000
0.2000 × vt 25791 0.6 BRZWNDO1 1 1 1.2000

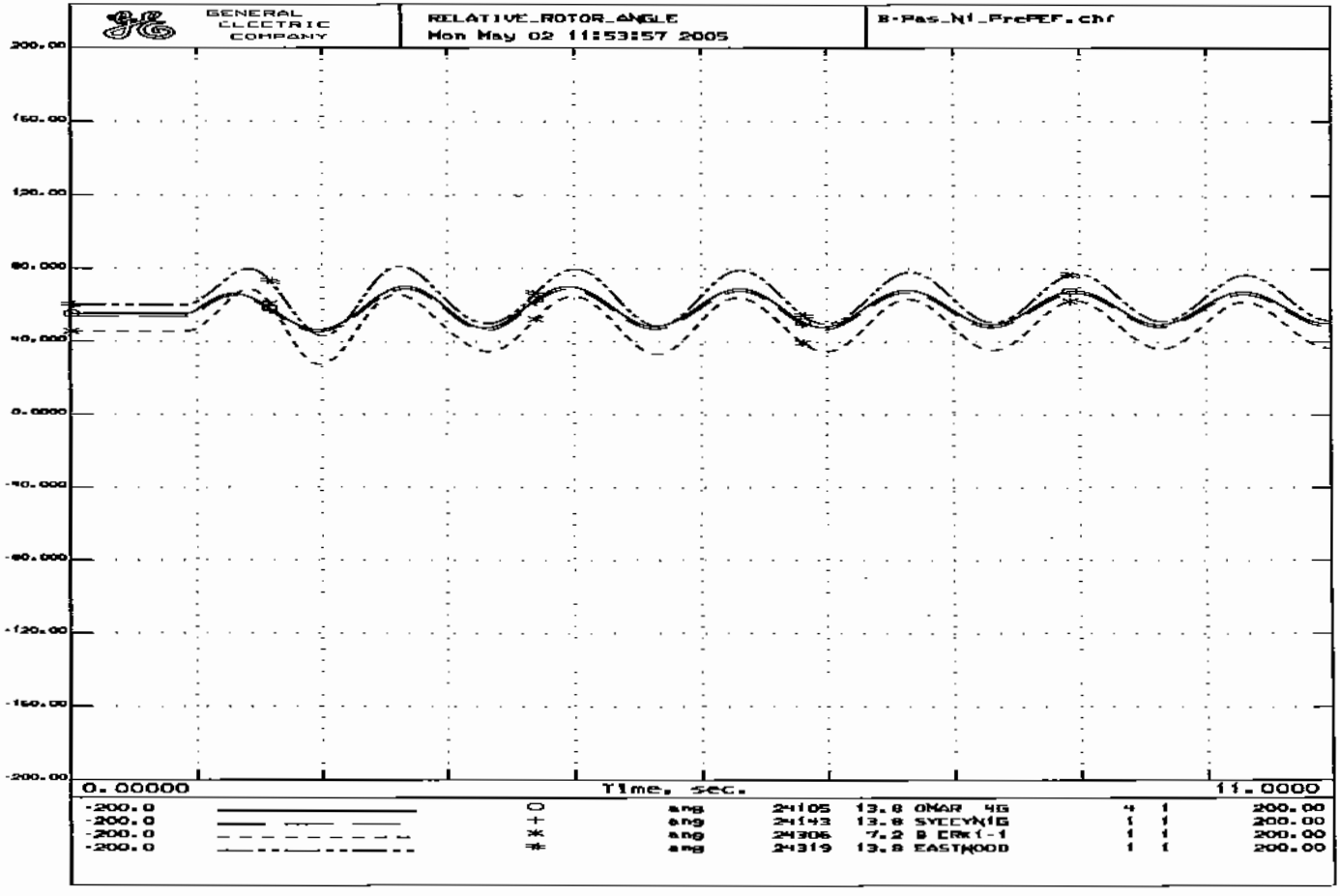
GENERAL ELECTRIC COMPANY
RELATIVE_ROTOR_ANGLE
Mon May 02 11:53:57 2005
B-Pas_N1_PrePEF.chf
200.00
160.00
120.00
80.000
40.000
0.0000
-40.000
-80.000
-120.00
-160.00
-200.00
0.00000
Time, sec.
11.0000
-200.0 ang 24105 13.8 OMAR 4G 4 1 200.00
-200.0 ang 24143 13.8 SYCCYNIG 1 1 200.00
-200.0 ang 24306 7.2 B ERK1-1 1 1 200.00
-200.0 ang 24319 13.8 EASTWOOD 1 1 200.00

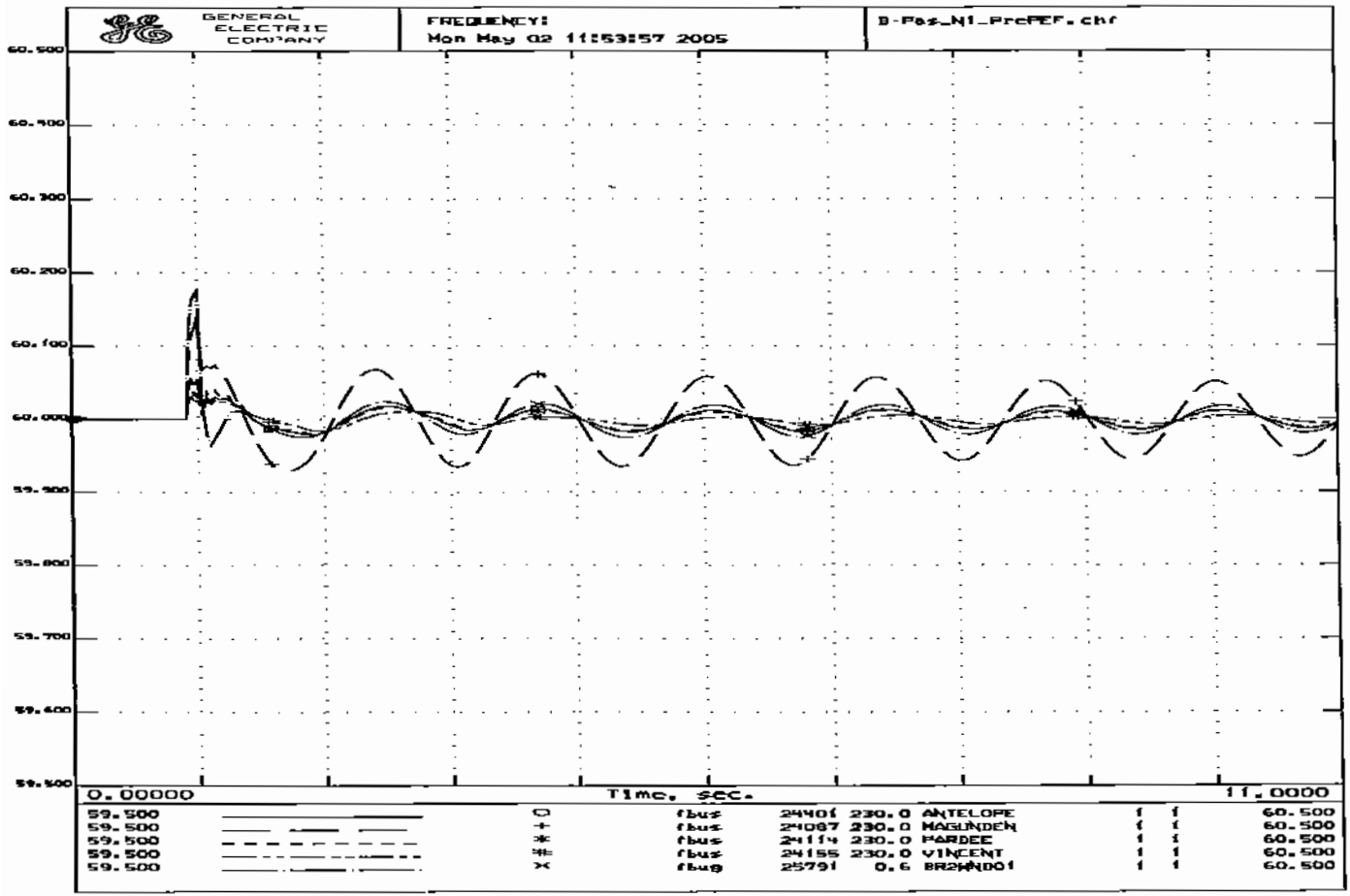
GENERAL ELECTRIC COMPANY
FREQUENCY:
Mon May 02 11:53:57 2005
B-Fas_N1_PrePEF.chf
60.500
60.400
60.300
60.200
60.100
60.000
59.900
59.800
59.700
59.600
59.500
0.00000
Time, sec.
11.0000
59.500 ○ fbus 24401 230.0 ANTELOPE 1 1 60.500
59.500 + fbus 24087 230.0 MAGUNDEN 1 1 60.500
59.500 * fbus 24114 230.0 PARDEE 1 1 60.500
59.500 * fbus 24155 230.0 VINCENT 1 1 60.500
59.500 × fbus 25791 0.6 BR2WNDO1 1 1 60.500

```
PrePEF_High_SOM.sav
PrePEF.dyd
TITLE
Calpine Pastoria Add Stability Study: Loss of One 230-KV Line
6-CYCLE 3-Phase Fault at Bailey 230kV Bus
N-1 OUTAGE: Pardee-Bailey 230kV Line
SYSTEM STABILITY CASE - B-P_N1_PrePEF.swt
PrePEF_High_SOM.sav + PrePEF.dyd + B-P_N1_PrePEF.swt
RUN 10.0
CC
CC   ***CALPINE PASTORIA ADD DYNAMIC STABILITY ASSESSMENT***
CC   APPLY A 3-PHASE FAULT ON THE BAILEY 230-KV BUS
FB   0.0 "BAILEY   " 230
CC
CC   CLEAR FAULT IN 6 CYCLES
CFB  6.0 "BAILEY   " 230
CC
CC   REMOVE PARDEE-BAILEY 230-KV LINE
DL   6.0 "PARDEE   " 230. "BAILEY   " 230. "1 "
```

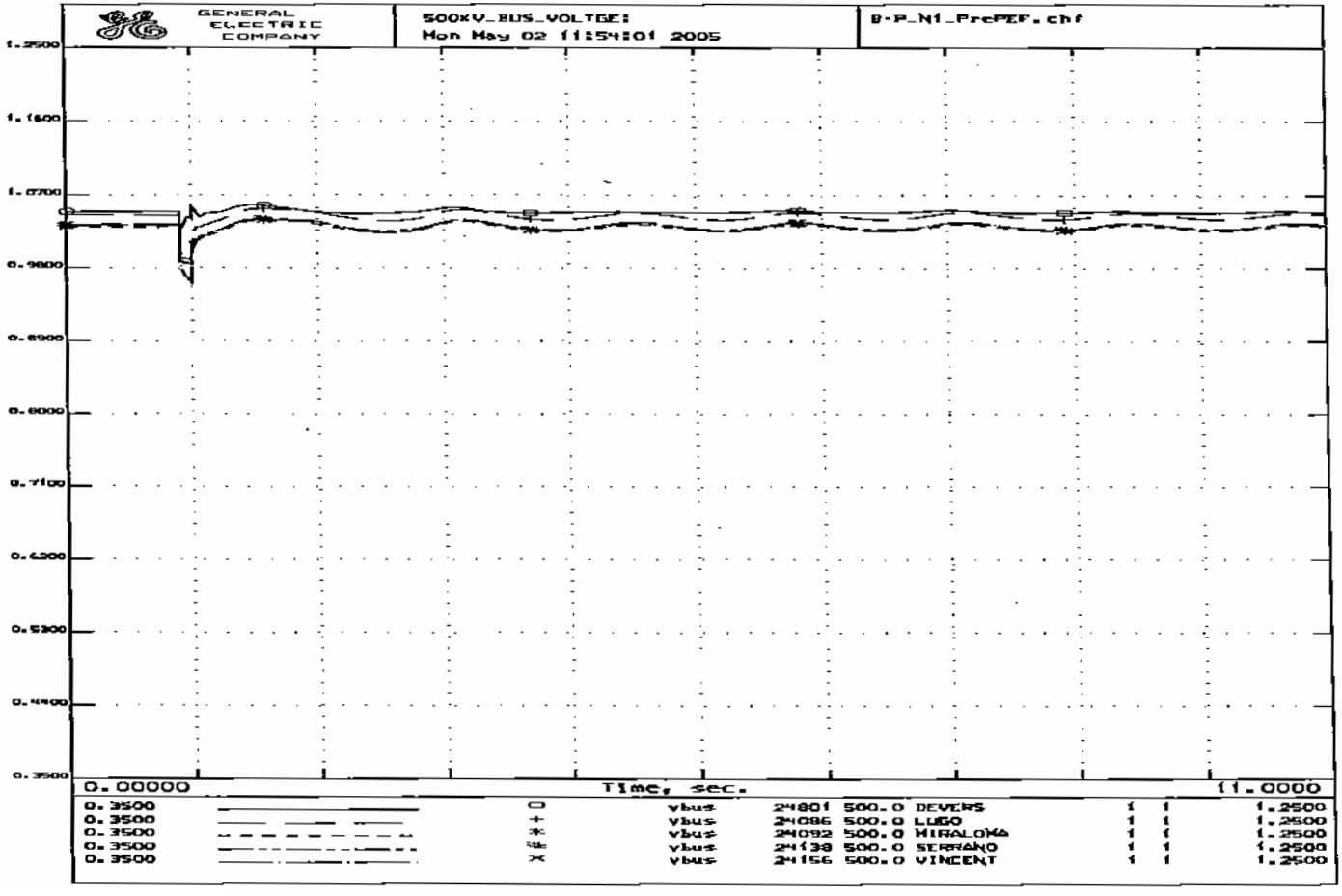
GENERAL ELECTRIC COMPANY
500KV_BUS_VOLTGE:
Mon May 02 11:54:01 2005
B-P_N1_PrePEF.chf
1.2500
1.1600
1.0700
0.9800
0.8900
0.8000
0.7100
0.6200
0.5300
0.4400
0.3500
0.00000
Time, sec.
11.0000
0.3500 vbus 24801 500.0 DEVERS 1 1 1.2500
0.3500 vbus 24086 500.0 LUGO 1 1 1.2500
0.3500 vbus 24092 500.0 MIRALOMA 1 1 1.2500
0.3500 vbus 24138 500.0 SERRANO 1 1 1.2500
0.3500 vbus 24156 500.0 VINCENT 1 1 1.2500

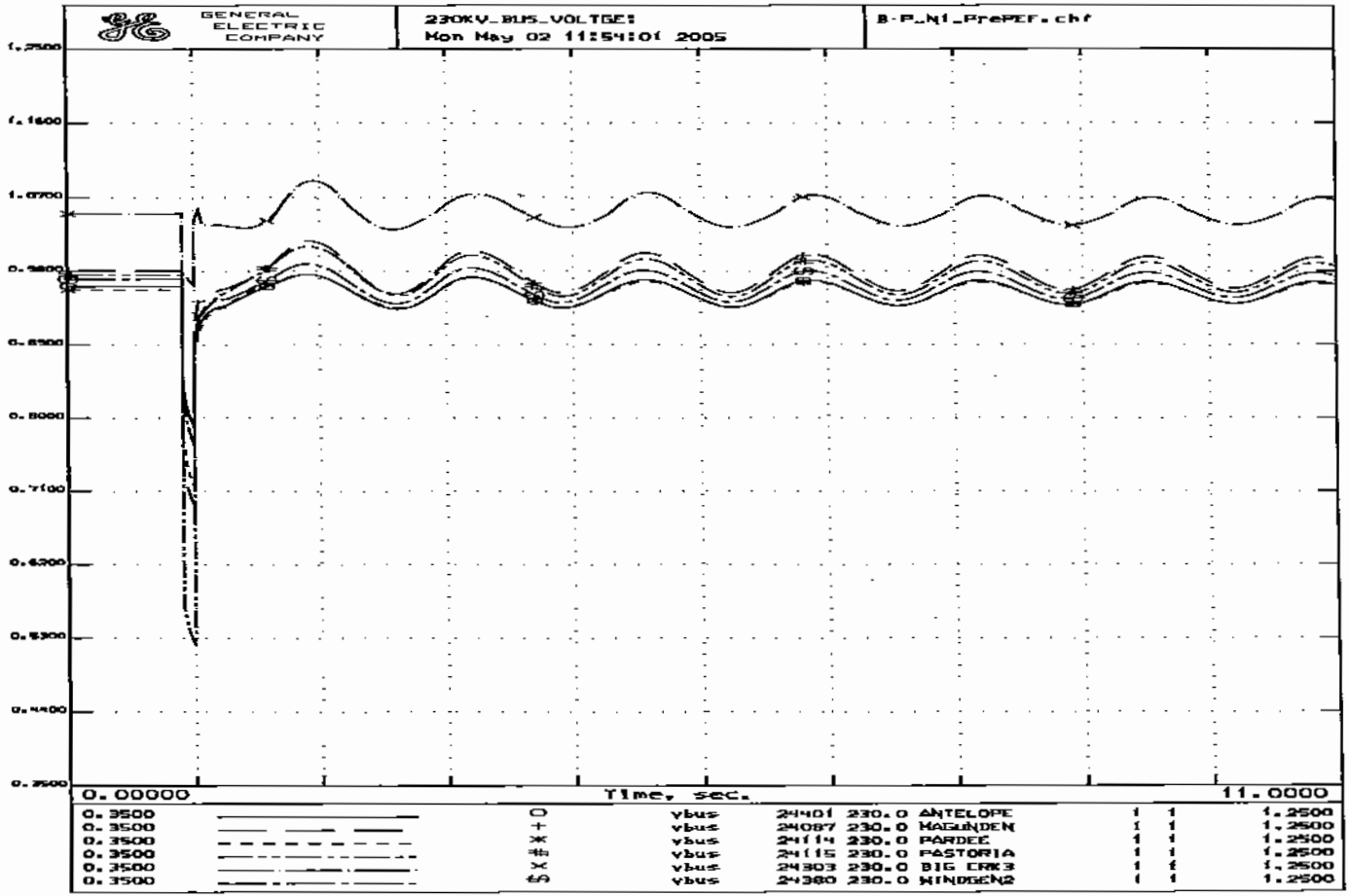
GENERAL ELECTRIC COMPANY
230KV_BUS_VOLTGE:
Mon May 02 11:54:01 2005
B-P_N1_PrePEF.chf
1.2500
1.1600
1.0700
0.9800
0.8900
0.8000
0.7100
0.6200
0.5300
0.4400
0.3500
0.00000
Time, sec.
11.0000
0.3500 O vbus 24401 230.0 ANTELOPE 1 1 1.2500
0.3500 + vbus 24087 230.0 MAGUNDEN 1 1 1.2500
0.3500 * vbus 24114 230.0 PARDEE 1 1 1.2500
0.3500 # vbus 24115 230.0 PASTORIA 1 1 1.2500
0.3500 X vbus 24303 230.0 BIG ERK3 1 1 1.2500
0.3500 6A vbus 24380 230.0 WINDGEN2 1 1 1.2500

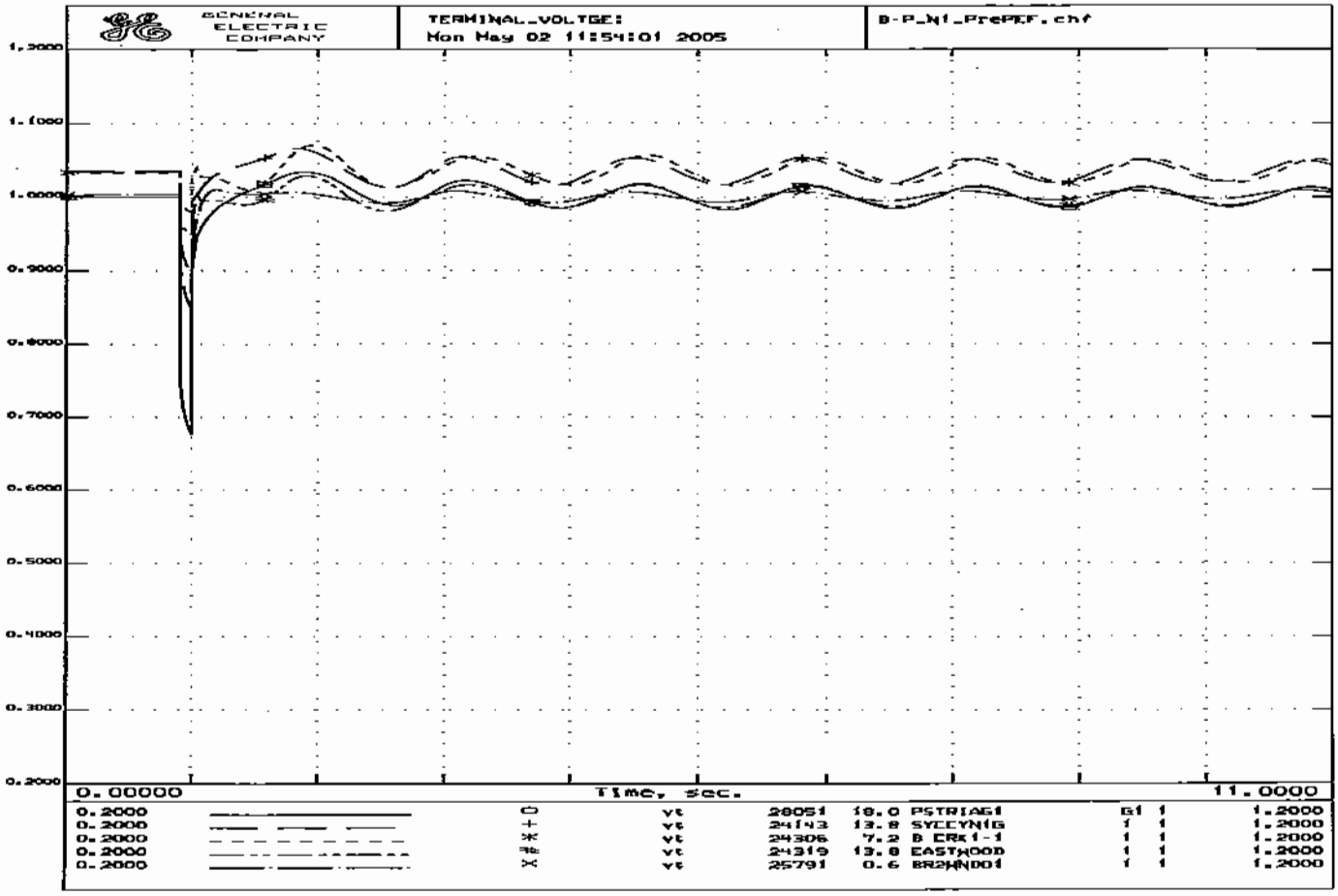
GENERAL ELECTRIC COMPANY
TERMINAL_VOLTGE:
Mon May 02 11:54:01 2005
B-P_N1_PrePEF.chf
1.2000
1.1000
1.0000
0.9000
0.8000
0.7000
0.6000
0.5000
0.4000
0.3000
0.2000
0.00000
Time, sec.
11.0000
0.2000 O vt 28051 18.0 PSTRIAG1 G1 1 1.2000
0.2000 + vt 24143 13.8 SYCCYNIG 1 1 1.2000
0.2000 * vt 24306 7.2 B ERK1-1 1 1 1.2000
0.2000 vt 24319 13.8 EASTWOOD 1 1 1.2000
0.2000 X vt 25791 0.6 BR2WNDO1 1 1 1.2000

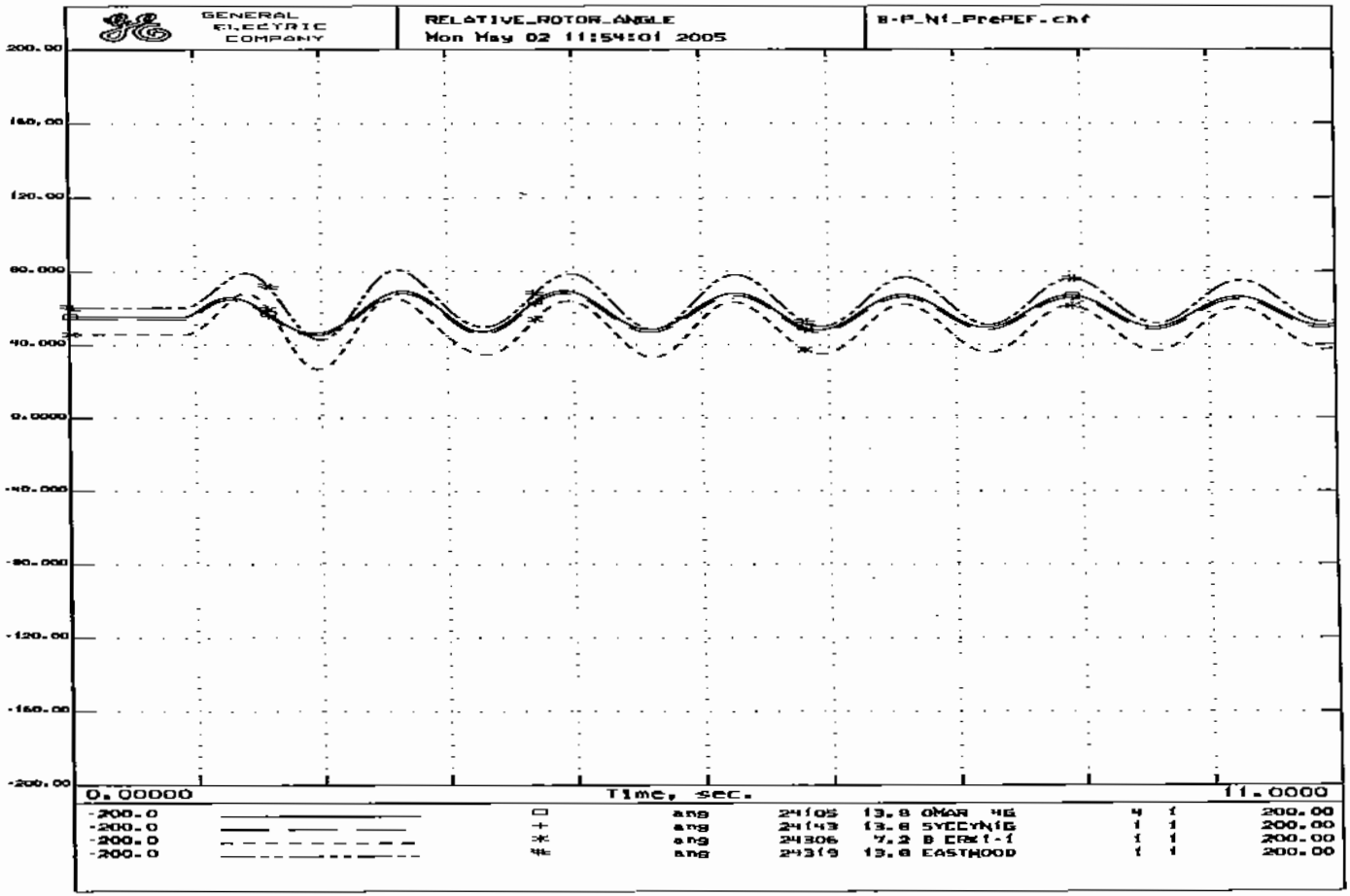
GENERAL ELECTRIC COMPANY
RELATIVE_ROTOR_ANGLE
Mon May 02 11:54:01 2005
B-P_N1_PrePEF.chf
200.00
160.00
120.00
80.000
40.000
0.0000
-40.000
-80.000
-120.00
-160.00
-200.00
0.00000
Time, sec.
11.0000
-200.0 ang 24105 13.8 OMAR 4G 4 1 200.00
-200.0 ang 24143 13.8 SYCCYN1G 1 1 200.00
-200.0 ang 24306 7.2 B ERM1-1 1 1 200.00
-200.0 ang 24319 13.8 EASTWOOD 1 1 200.00

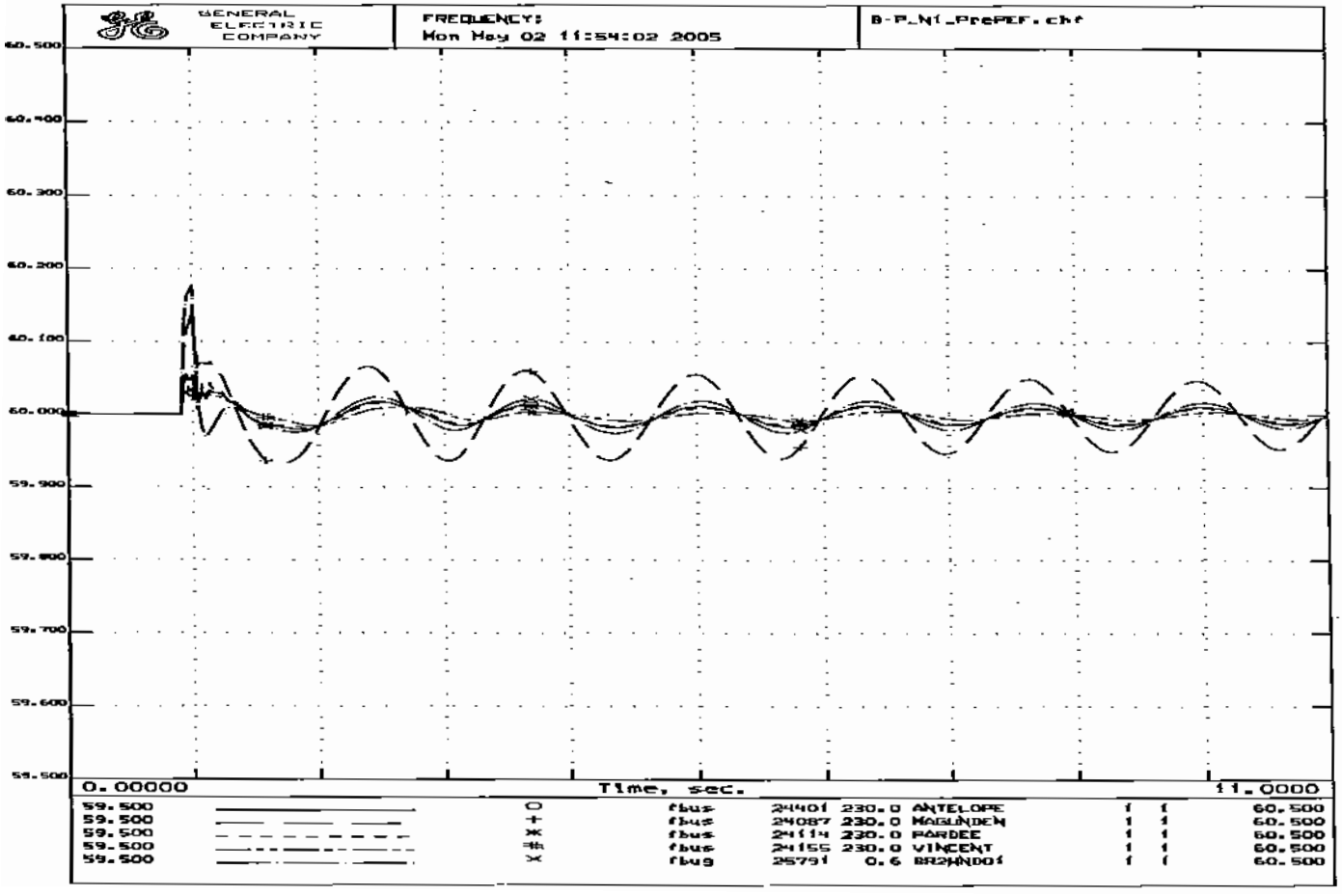
GENERAL ELECTRIC COMPANY
FREQUENCY:
Mon May 02 11:54:02 2005
B-P_N1_PrePEF.chf
60.500
60.400
60.300
60.200
60.100
60.000
59.900
59.800
59.700
59.600
59.500
0.00000
Time, sec.
11.0000
59.500 ○ fbus 24401 230.0 ANTELOPE 1 1 60.500
59.500 + fbus 24087 230.0 MAGUNDEN 1 1 60.500
59.500 ✕ fbus 24114 230.0 PARDEE 1 1 60.500
59.500 # fbus 24155 230.0 VINCENT 1 1 60.500
59.500 ✕ fbus 25791 0.6 BRAHNDO1 1 1 60.500

```
PrePEF_High_SOM.sav
PrePEF.dyd
TITLE
Calpine Pastoria Add Stability Study: Loss of One 230-KV Line
6-CYCLE 3-Phase Fault at Magunden 230kV Bus
N-1 OUTAGE: Magunden-Antelope No.1 230kV Line
SYSTEM STABILITY CASE - Ma-A_N1_PrePEF.swt
PrePEF_High_SOM.sav + PrePEF.dyd + Ma-A_N1_PrePEF.swt
RUN 10.0
CC
CC   ***CALPINE PASTORIA ADD DYNAMIC STABILITY ASSESSMENT***
CC   APPLY A 3-PHASE FAULT ON THE MAGUNDEN 230-KV BUS
FB   0.0 "MAGUNDEN" 230
CC
CC   CLEAR FAULT IN 6 CYCLES
CFB  6.0 "MAGUNDEN" 230
CC
CC   REMOVE MAGUNDEN-ANTELOPE NO.1 230-KV LINE
DL   6.0 "MAGUNDEN" 230. "ANTELOPE" 230. "1 "
```

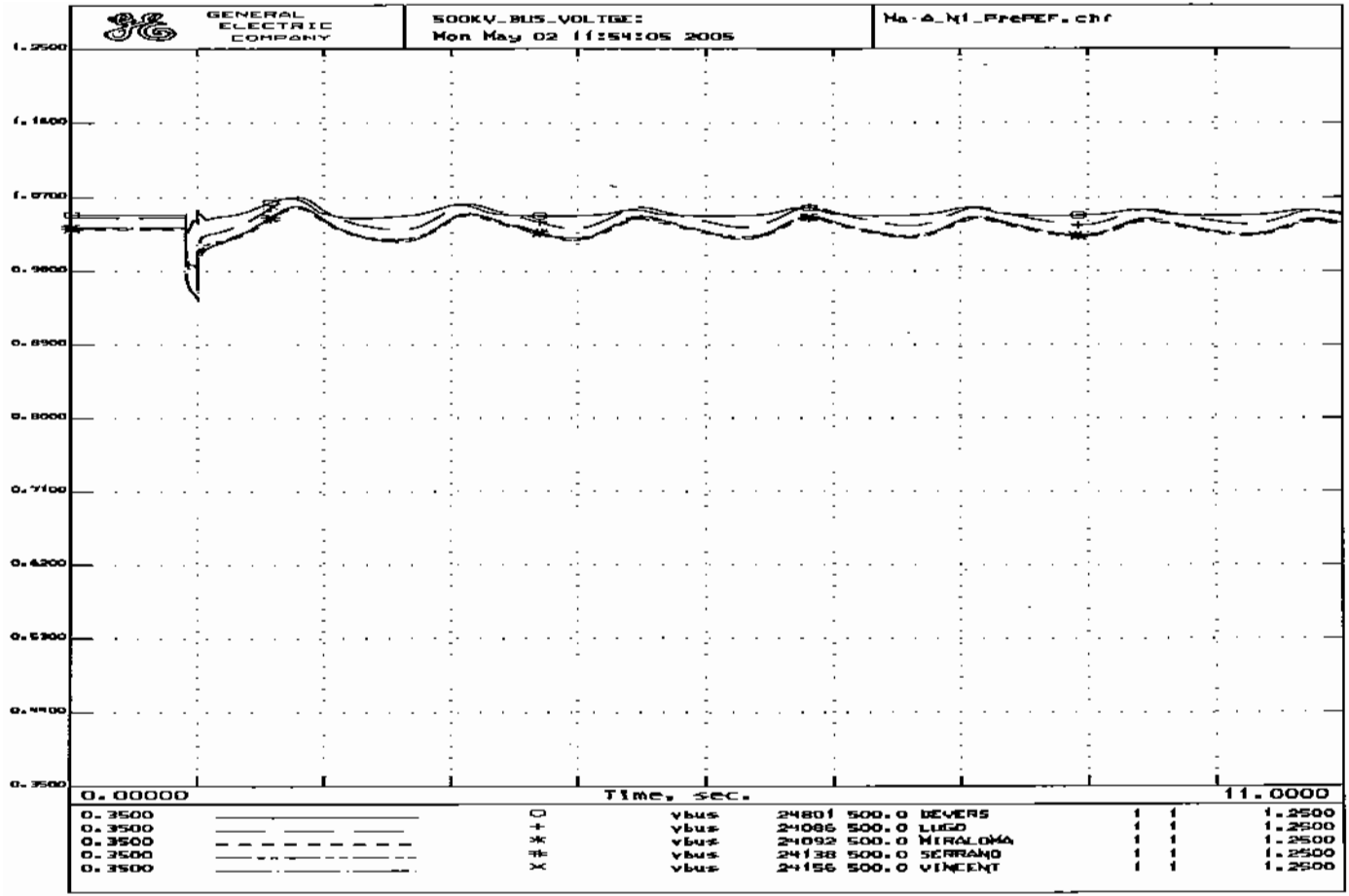
GENERAL ELECTRIC COMPANY
500KV_BUS_VOLTGE:
Mon May 02 11:54:05 2005
Ma-A_N1_PrePEF.chf
1.2500
1.1500
1.0700
0.9800
0.8900
0.8000
0.7100
0.6200
0.5300
0.4400
0.3500
0.00000
Time, sec.
11.0000
0.3500 vbus 24801 500.0 BEVERS 1 1 1.2500
0.3500 vbus 24086 500.0 LUGO 1 1 1.2500
0.3500 vbus 24092 500.0 MIRALOMA 1 1 1.2500
0.3500 vbus 24138 500.0 SERRANO 1 1 1.2500
0.3500 vbus 24156 500.0 VINCENT 1 1 1.2500

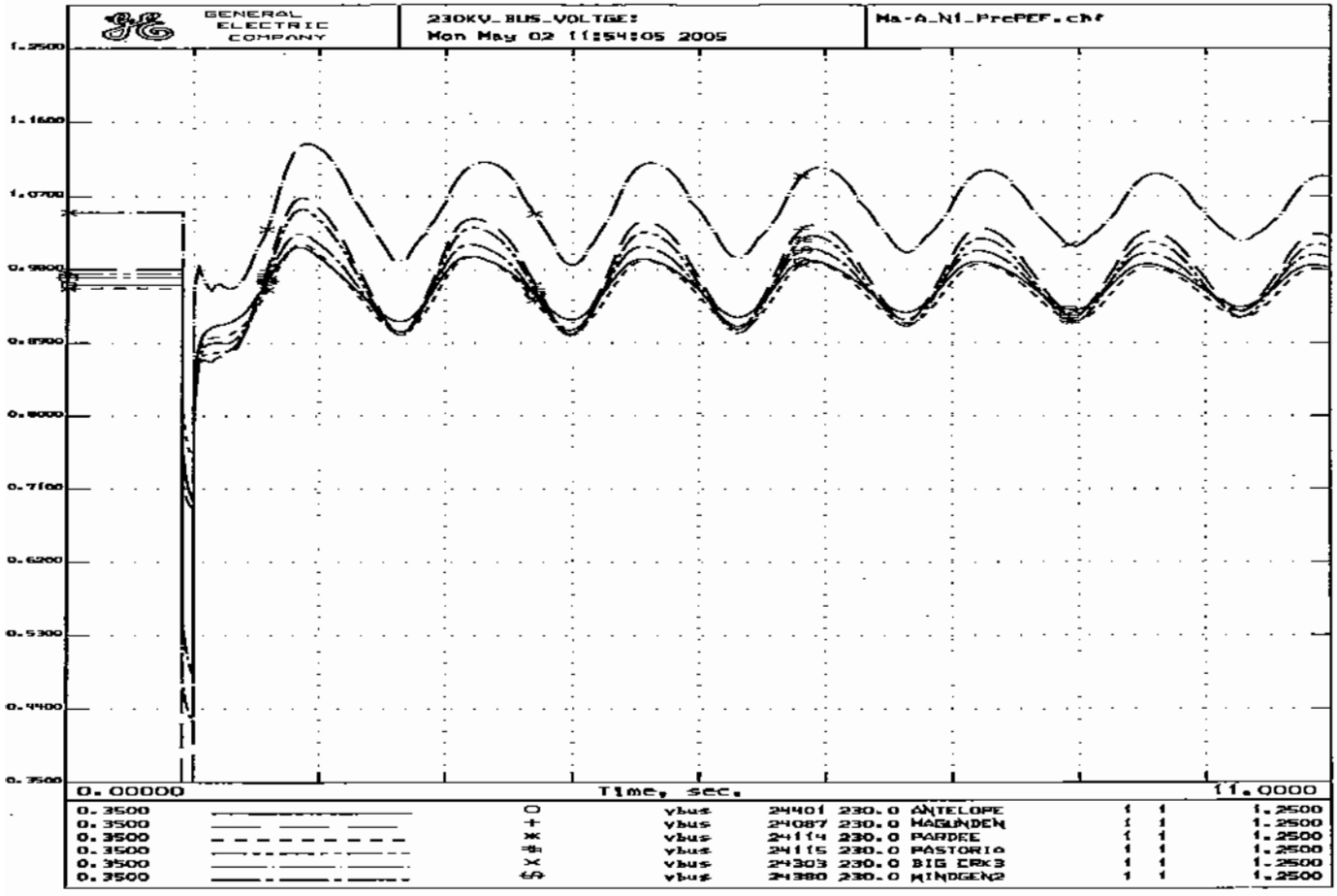
GENERAL ELECTRIC COMPANY
230KV_BUS_VOLTGE:
Mon May 02 11:54:05 2005
Ma-A_N1_PrePEF.chf
1.2500
1.1600
1.0700
0.9800
0.8900
0.8000
0.7100
0.6200
0.5300
0.4400
0.3500
0.00000
Time, sec.
11.0000
0.3500 ○ vbus 24401 230.0 ANTELOPE 1 1 1.2500
0.3500 + vbus 24087 230.0 MAGUNDEN 1 1 1.2500
0.3500 ✱ vbus 24114 230.0 PARDEE 1 1 1.2500
0.3500 # vbus 24115 230.0 PASTORIA 1 1 1.2500
0.3500 × vbus 24303 230.0 BIG ERK3 1 1 1.2500
0.3500 ⊕ vbus 24380 230.0 MINDGEN2 1 1 1.2500

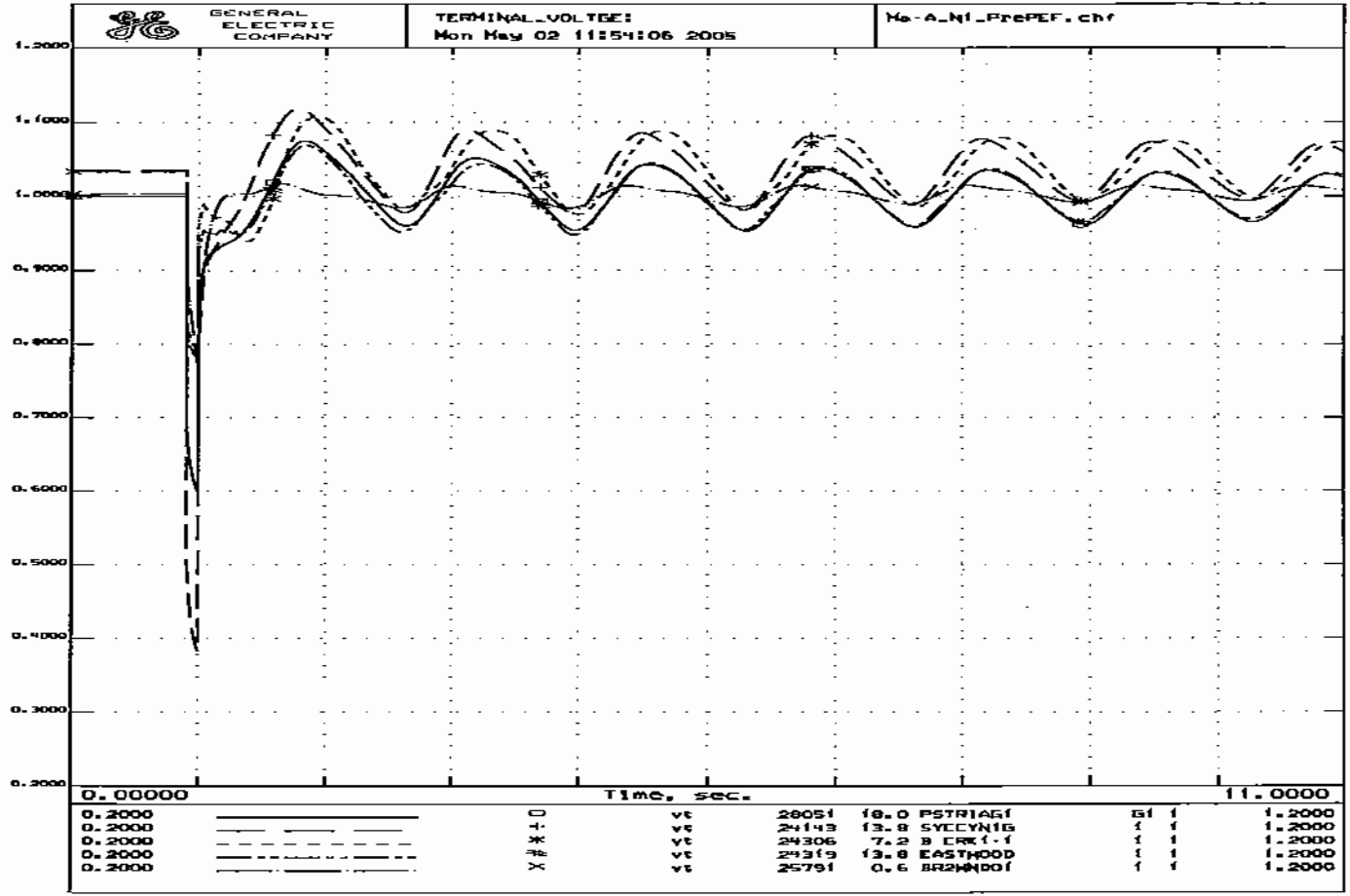
GENERAL ELECTRIC COMPANY
TERMINAL_VOLTGE:
Mon May 02 11:54:06 2005
Ma-A_N1_PrePEF.chf
1.2000
1.1000
1.0000
0.9000
0.8000
0.7000
0.6000
0.5000
0.4000
0.3000
0.2000
0.00000
Time, sec.
11.0000
0.2000 ○ vt 28051 18.0 PSTRIAG1 G1 1 1.2000
0.2000 + vt 24143 13.8 SYCCYN1G 1 1 1.2000
0.2000 * vt 24306 7.2 B ERK1-1 1 1 1.2000
0.2000 # vt 24319 13.8 EASTWOOD 1 1 1.2000
0.2000 X vt 25791 0.6 BR2WNDOI 1 1 1.2000

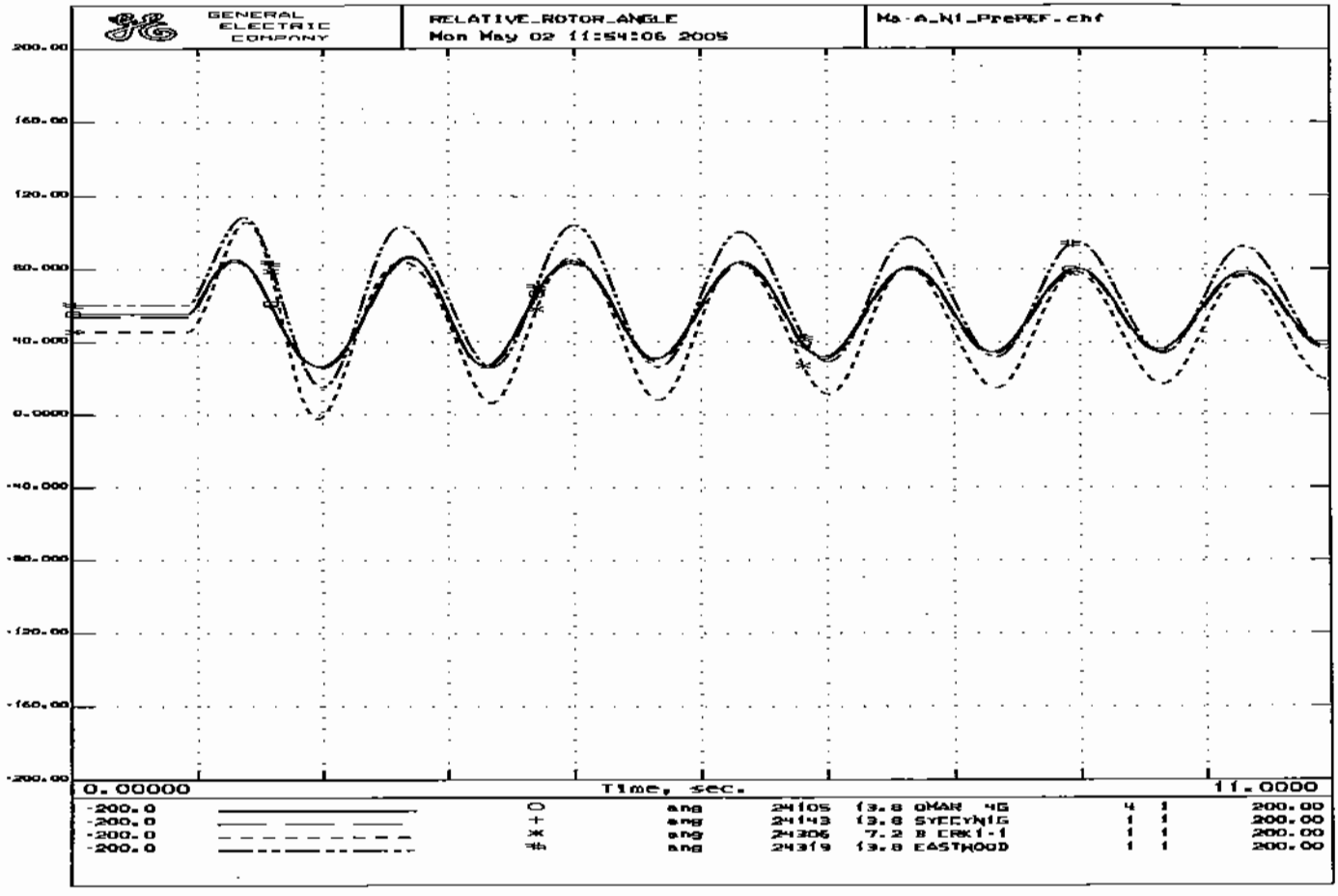
GENERAL ELECTRIC COMPANY
RELATIVE_ROTOR_ANGLE
Mon May 02 11:54:06 2005
Ma-A_N1_PrePEF.chf
200.00
160.00
120.00
80.000
40.000
0.0000
-40.000
-80.000
-120.00
-160.00
-200.00
0.00000
Time, sec.
11.0000
-200.0 ang 24105 13.8 OMAR 4G 4 1 200.00
-200.0 ang 24143 13.8 SYECYNIG 1 1 200.00
-200.0 ang 24306 7.2 B ERK1-1 1 1 200.00
-200.0 ang 24319 13.8 EASTWOOD 1 1 200.00

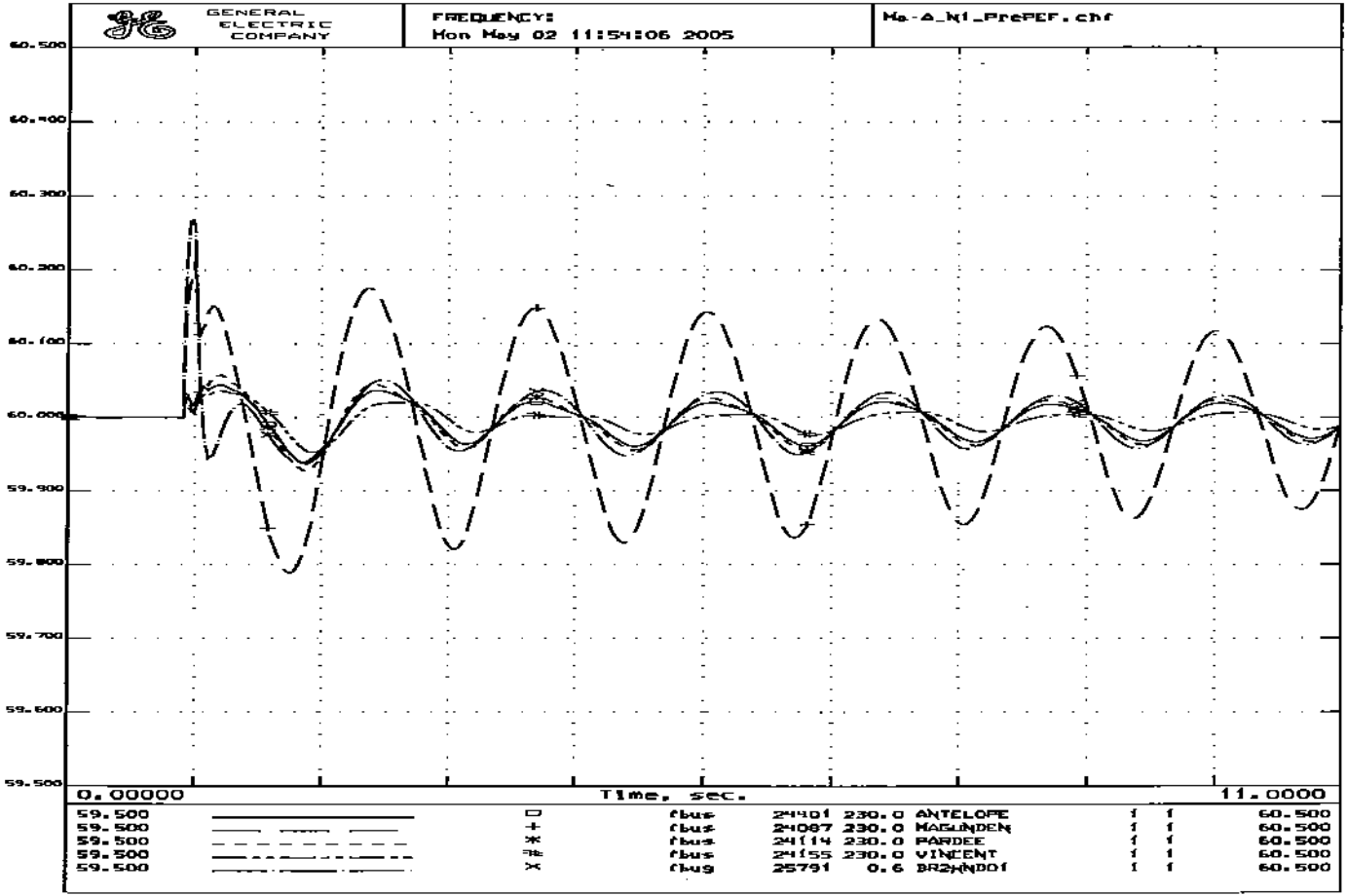
GENERAL ELECTRIC COMPANY
FREQUENCY:
Mon May 02 11:54:06 2005
Ma-A_N1_PrePEF.chf
60.500
60.400
60.300
60.200
60.100
60.000
59.900
59.800
59.700
59.600
59.500
0.00000
Time, sec.
11.0000
59.500 □ fbus 24401 230.0 ANTELOPE 1 1 60.500
59.500 + fbus 24087 230.0 MASUNDEN 1 1 60.500
59.500 * fbus 24114 230.0 PARDEE 1 1 60.500
59.500 # fbus 24155 230.0 VINCENT 1 1 60.500
59.500 × fbus 25791 0.6 BR2WND01 1 1 60.500

```
PrePEF_High_SOM.sav
PrePEF.dyd
TITLE
Calpine Pastoria Add Stability Study: Loss of One 230-KV Line
6-CYCLE 3-Phase Fault at Magunden 230kV Bus
N-1 OUTAGE: Magunden-Pastoria No.3 230kV Line
SYSTEM STABILITY CASE - Ma-Pas_N1_PrePEF.swt
PrePEF_High_SOM.sav + PrePEF.dyd + Ma-Pas_N1_PrePEF.swt
RUN 10.0
CC
CC   ***CALPINE PASTORIA ADD DYNAMIC STABILITY ASSESSMENT***
CC   APPLY A 3-PHASE FAULT ON THE MAGUNDEN 230-KV BUS
FB   0.0 "MAGUNDEN" 230
CC
CC   CLEAR FAULT IN 6 CYCLES
CFB  6.0 "MAGUNDEN" 230
CC
CC   REMOVE MAGUNDEN-ANTELOPE NO.3 230-KV LINE
DL   6.0 "MAGUNDEN" 230. "PASTORIA" 230. "3 "
```

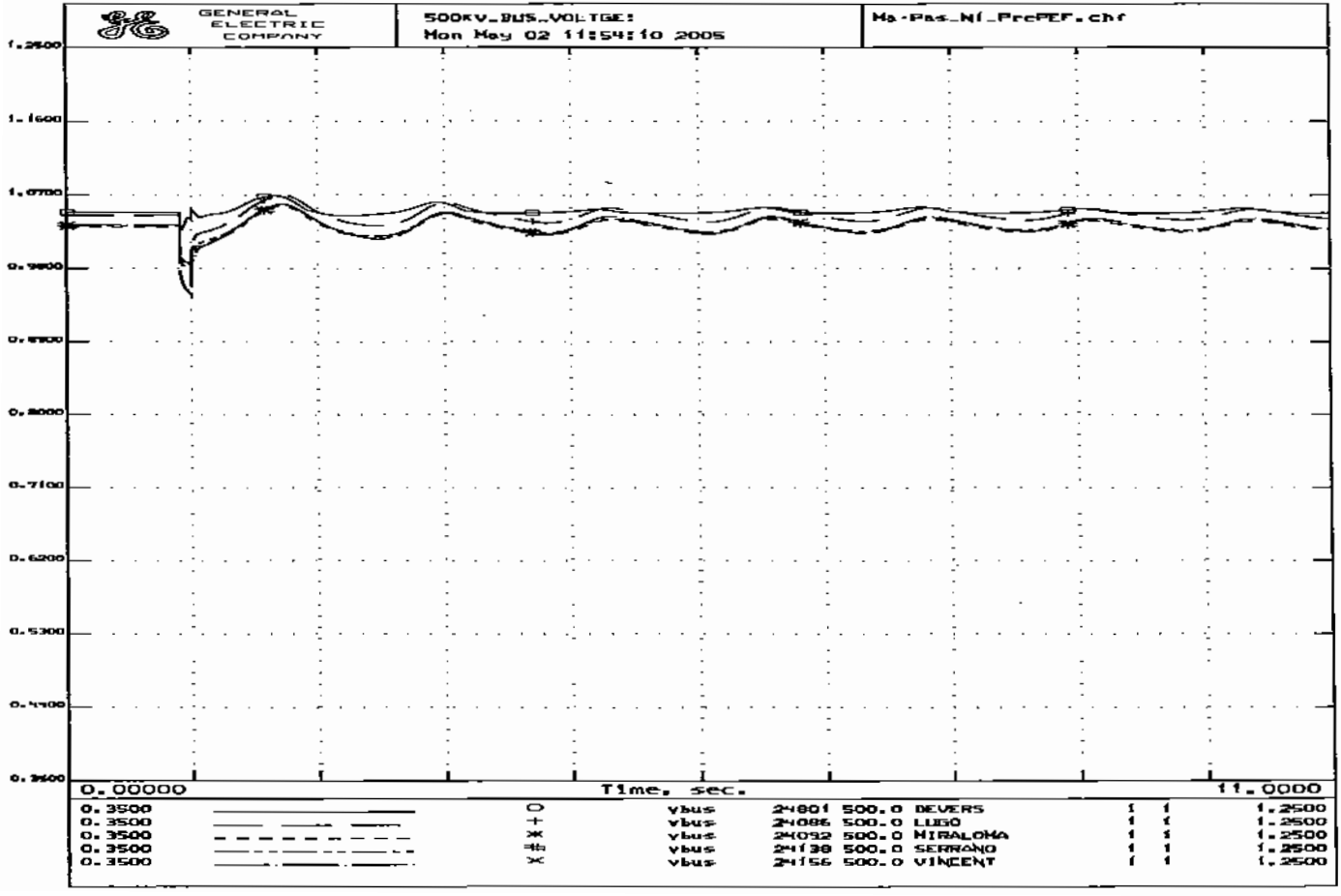
GENERAL ELECTRIC COMPANY
500KV_BUS_VOLTGE:
Mon May 02 11:54:10 2005
Ma-Pas_Ni_PrePEF.chf
1.2500
1.1600
1.0700
0.9800
0.8900
0.8000
0.7100
0.6200
0.5300
0.4400
0.3500
0.00000
Time, sec.
11.0000
0.3500 ○ vbus 24801 500.0 DEVERS 1 1 1.2500
0.3500 + vbus 24086 500.0 LUGO 1 1 1.2500
0.3500 ✱ vbus 24092 500.0 MIRALOMA 1 1 1.2500
0.3500 # vbus 24138 500.0 SERRANO 1 1 1.2500
0.3500 × vbus 24156 500.0 VINCENT 1 1 1.2500

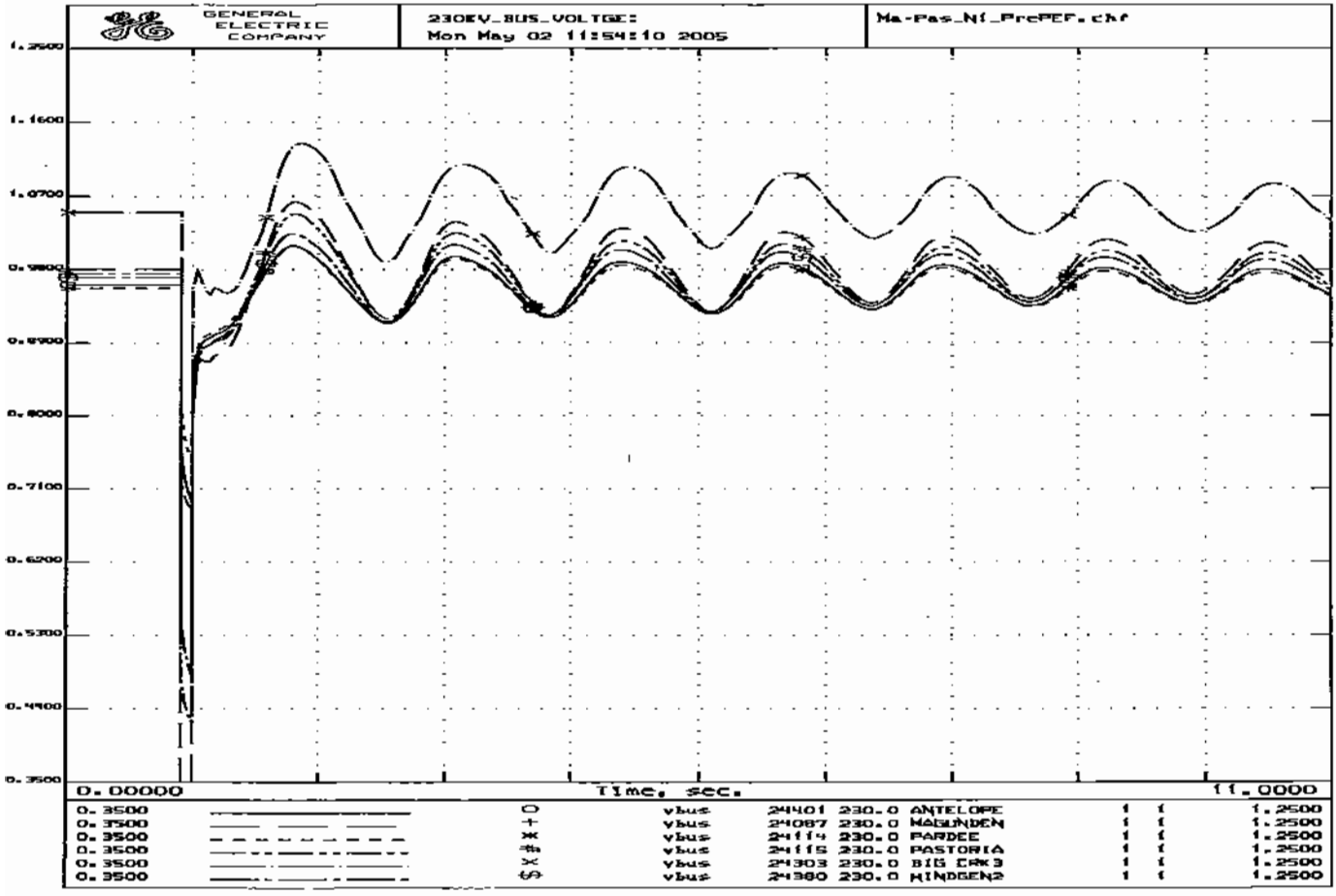
GENERAL ELECTRIC COMPANY
230KV_BUS_VOLTGE:
Mon May 02 11:54:10 2005
Ma-Pas_NI_PrePEF.chf
1.2500
1.1600
1.0700
0.9800
0.8900
0.8000
0.7100
0.6200
0.5300
0.4400
0.3500
0.00000
Time, sec.
11.0000
0.3500 vbus 24401 230.0 ANTELOPE 1 1 1.2500
0.3500 vbus 24087 230.0 MAGUNDEN 1 1 1.2500
0.3500 vbus 24114 230.0 PARDEE 1 1 1.2500
0.3500 vbus 24115 230.0 PASTORIA 1 1 1.2500
0.3500 vbus 24303 230.0 BIG CRK3 1 1 1.2500
0.3500 vbus 24380 230.0 MINDGEN2 1 1 1.2500

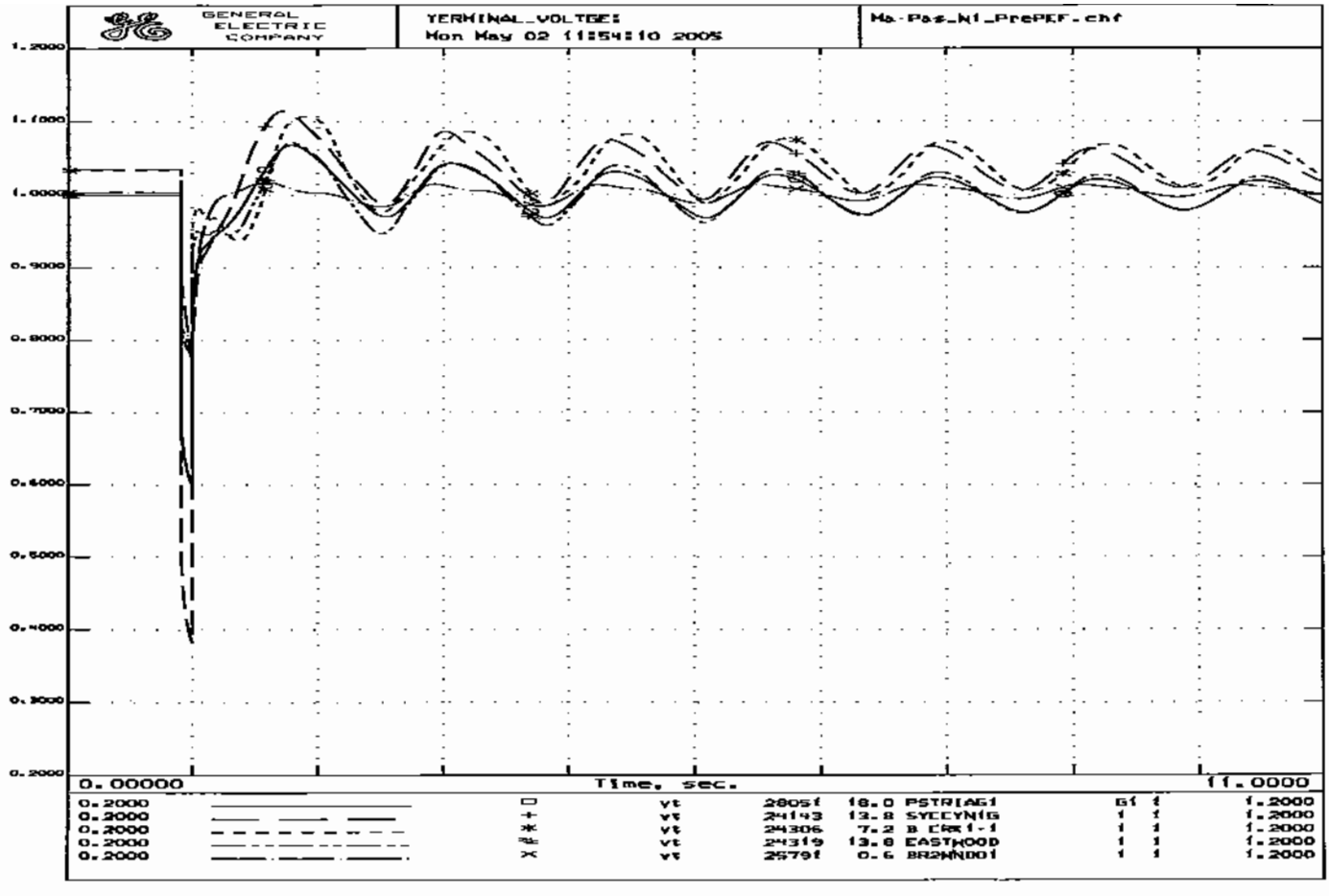
GENERAL ELECTRIC COMPANY
TERMINAL_VOLTGE:
Mon May 02 11:54:10 2005
Ma-Pas_N1_PrePEF.chf
1.2000
1.1000
1.0000
0.9000
0.8000
0.7000
0.6000
0.5000
0.4000
0.3000
0.2000
0.00000
Time, sec.
11.0000
0.2000 vt 28051 18.0 PSTRIAG1 G1 1 1.2000
0.2000 vt 24143 12.8 SYCCYNIG 1 1 1.2000
0.2000 vt 24306 7.2 B CRK1-1 1 1 1.2000
0.2000 vt 24319 13.8 EASTWOOD 1 1 1.2000
0.2000 vt 25791 0.6 BRWNWD01 1 1 1.2000

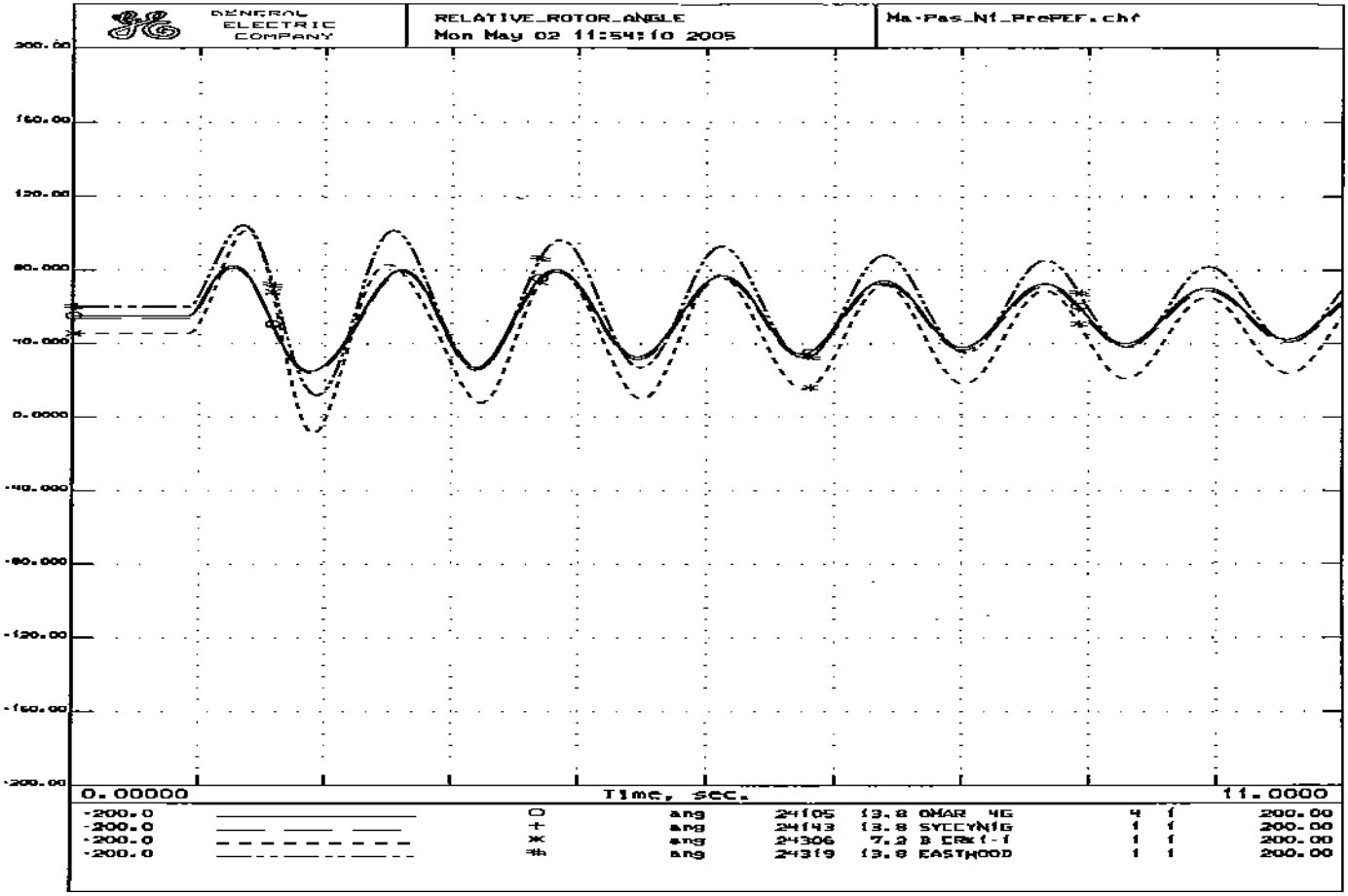
GENERAL ELECTRIC COMPANY
RELATIVE_ROTOR_ANGLE
Mon May 02 11:54:10 2005
Ma-Pas_N1_PrePEF.chf
200.00
160.00
120.00
80.000
40.000
0.0000
-40.000
-80.000
-120.00
-160.00
-200.00
0.00000
Time, sec.
11.0000
-200.0 ang 24105 13.8 OMAR 4G 4 1 200.00
-200.0 ang 24143 13.8 SYCCYNIG 1 1 200.00
-200.0 ang 24306 7.2 B ERK1-1 1 1 200.00
-200.0 ang 24319 13.8 EASTWOOD 1 1 200.00

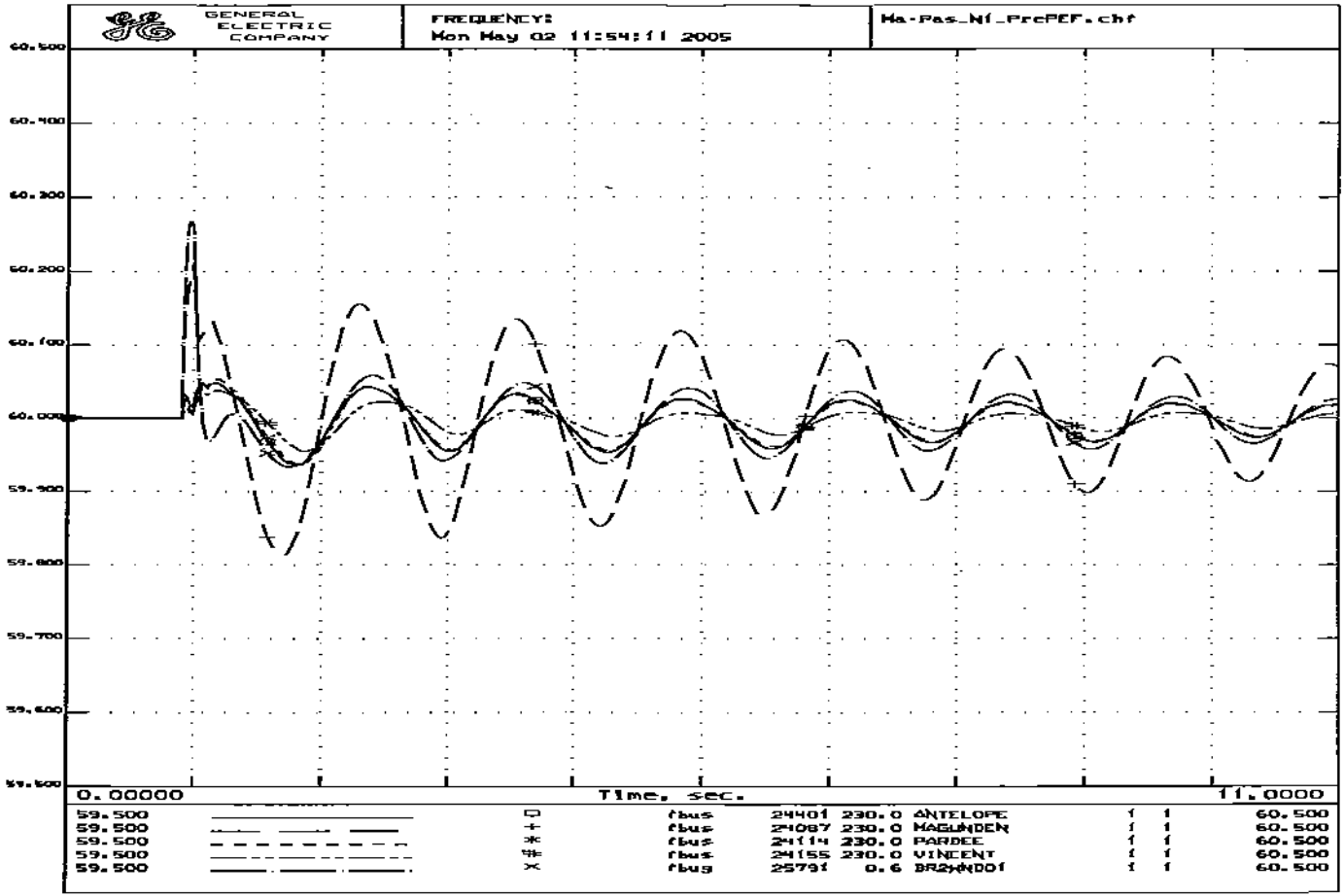
GENERAL ELECTRIC COMPANY
FREQUENCY:
Mon May 02 11:54:11 2005
Ma-Pas_Nf_PrcPEF.chf
60.500
60.400
60.300
60.200
60.100
60.000
59.900
59.800
59.700
59.600
59.500
0.00000
Time, sec.
11.0000
59.500 □ fbus 24401 230.0 ANTELOPE 1 1 60.500
59.500 + fbus 24087 230.0 MAGUNDEN 1 1 60.500
59.500 * fbus 24114 230.0 PARDEE 1 1 60.500
59.500 # fbus 24155 230.0 VINCENT 1 1 60.500
59.500 × fbus 25791 0.6 BR2WNDO1 1 1 60.500

```
PrePEF_High_SOM.sav
PrePEF.dyd
TITLE
Calpine Pastoria Add Stability Study; Loss of One 230-KV Line
6-CYCLE 3-Phase Fault at Magunden 230kV Bus
N-1 OUTAGE: Magunden-Windgen2 230kV Line
SYSTEM STABILITY CASE - Ma-W2_N1_PrePEF.swt
PrePEF_High_SOM.sav + PrePEF.dyd + Ma-W2_N1_PrePEF.swt
RUN 10.0
CC
CC   ***CALPINE PASTORIA ADD DYNAMIC STABILITY ASSESSMENT***
CC   APPLY A 3-PHASE FAULT ON THE MAGUNDEN 230-KV BUS
FB   0.0 "MAGUNDEN" 230
CC
CC   CLEAR FAULT IN 6 CYCLES
CFB  6.0 "MAGUNDEN" 230
CC
CC   REMOVE MAGUNDEN-WINDGEN2 230-KV LINE
DL   6.0 "MAGUNDEN" 230. "WINDGEN2" 230. "1 "
```

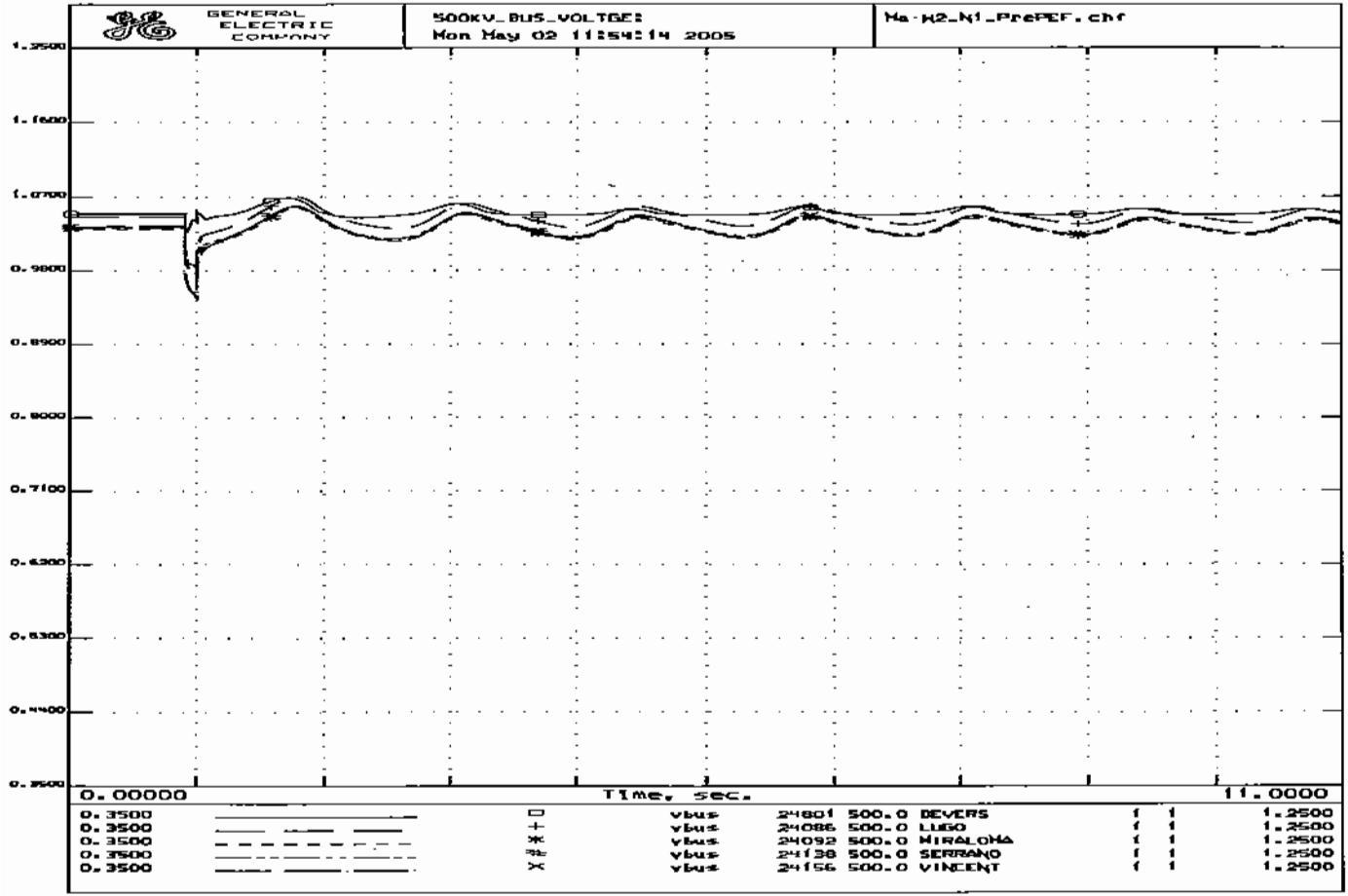
GENERAL ELECTRIC COMPANY
500KV_BUS_VOLTGE:
Mon May 02 11:54:14 2005
Ma-W2_N1_PrePEF.chf
1.2500
1.1600
1.0700
0.9800
0.8900
0.8000
0.7100
0.6200
0.5300
0.4400
0.3500
0.00000
Time, sec.
11.0000
0.3500 □ vbus 24801 500.0 DEVERS 1 1 1.2500
0.3500 + vbus 24086 500.0 LUGO 1 1 1.2500
0.3500 ✳ vbus 24092 500.0 MIRALOMA 1 1 1.2500
0.3500 ≈ vbus 24138 500.0 SERRANO 1 1 1.2500
0.3500 × vbus 24156 500.0 VINCENT 1 1 1.2500

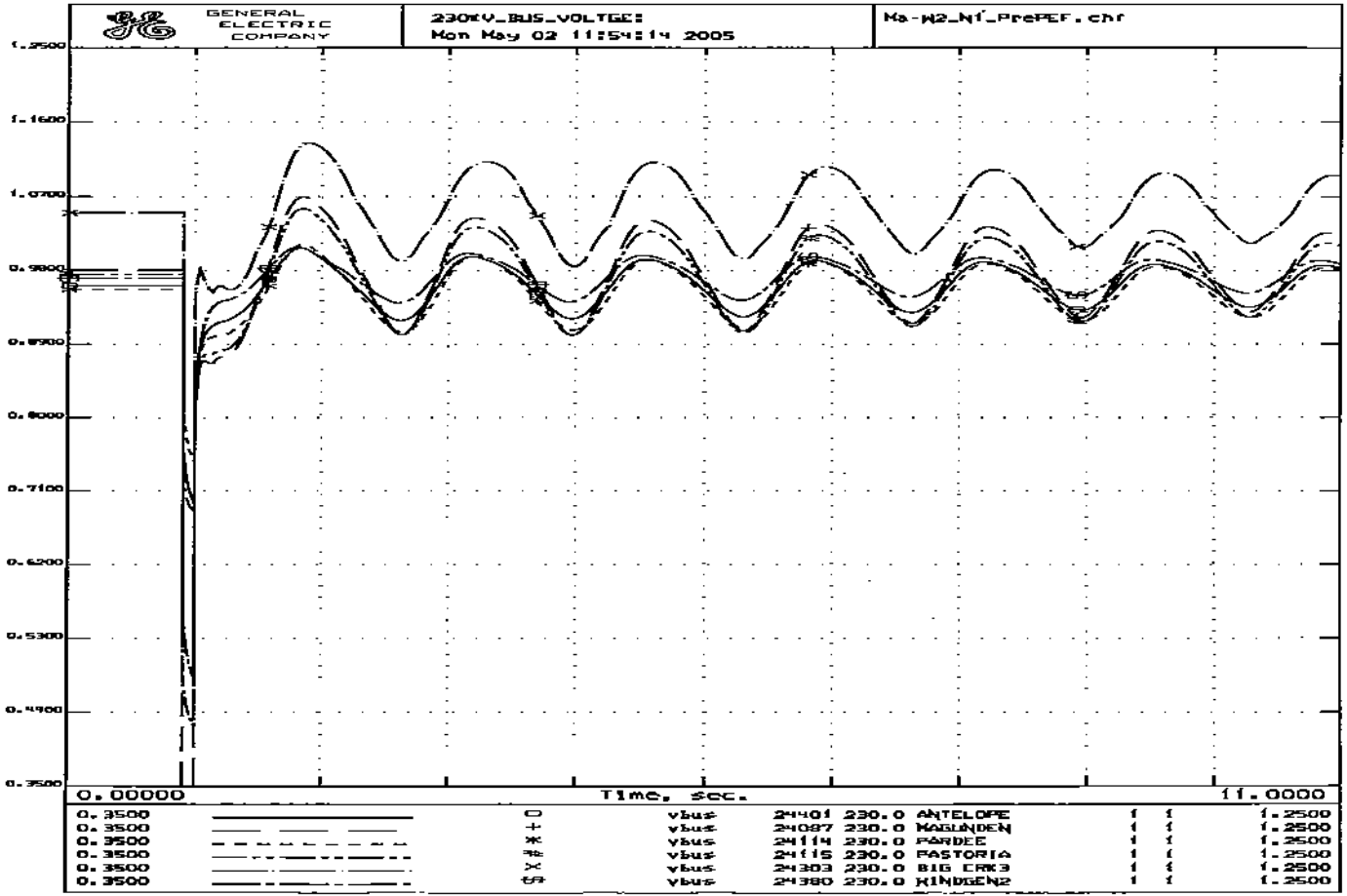
GENERAL ELECTRIC COMPANY
230KV_BUS_VOLTGE:
Mon May 02 11:54:14 2005
Ma-W2_N1_PrePEF.chr
1.2500
1.1600
1.0700
0.9800
0.8900
0.8000
0.7100
0.6200
0.5300
0.4400
0.3500
0.00000
Time, sec.
11.0000
0.3500 vbus 24401 230.0 ANTELOPE 1 1 1.2500
0.3500 vbus 24087 230.0 MAGUNDEN 1 1 1.2500
0.3500 vbus 24114 230.0 PARDEE 1 1 1.2500
0.3500 vbus 24115 230.0 PASTORIA 1 1 1.2500
0.3500 vbus 24303 230.0 BIG CRK3 1 1 1.2500
0.3500 vbus 24380 230.0 KINDGEN2 1 1 1.2500

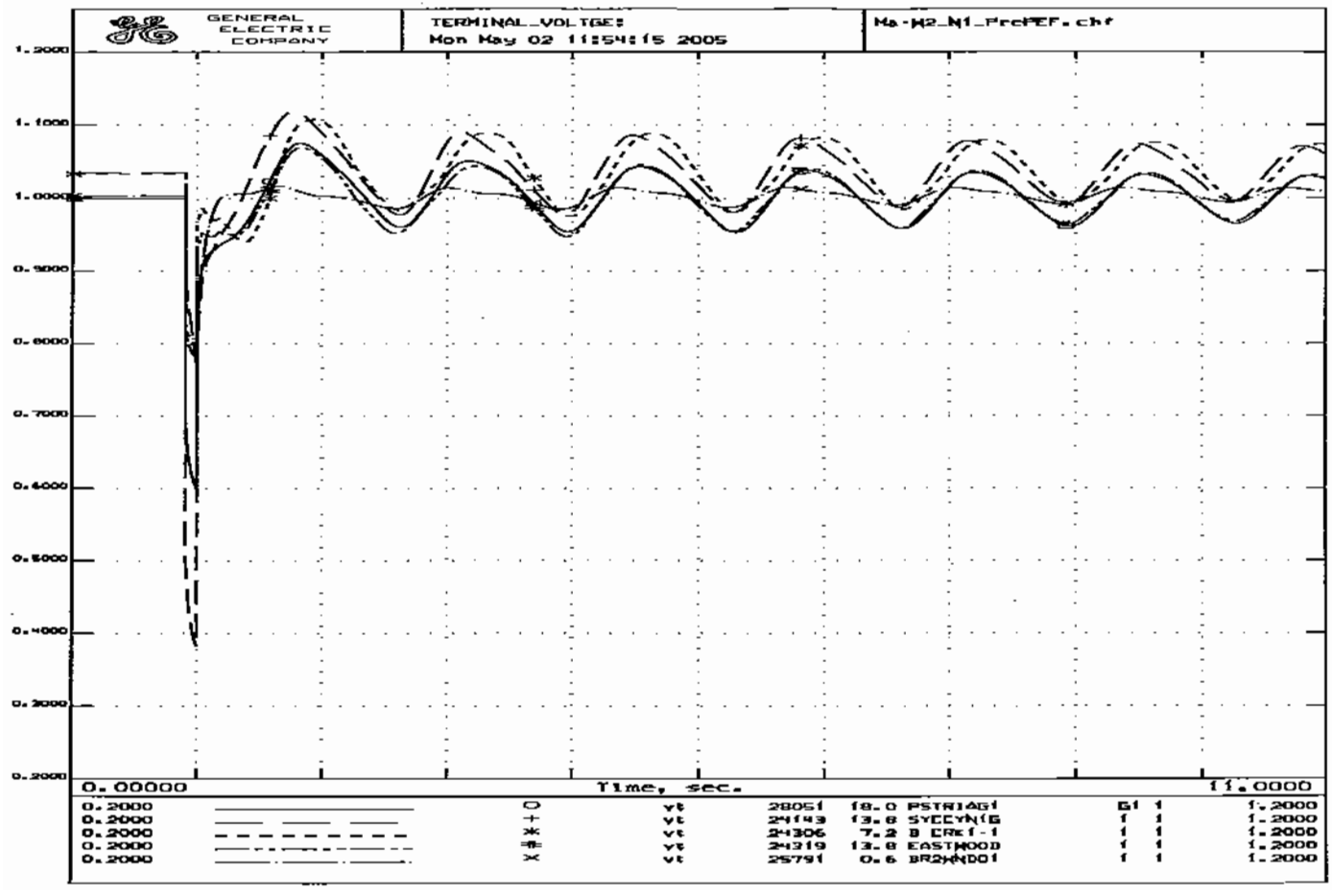
GENERAL ELECTRIC COMPANY
TERMINAL_VOLTGE:
Mon May 02 11:54:15 2005
Ma-W2_N1_PrePF.chf
1.2000
1.1000
1.0000
0.9000
0.8000
0.7000
0.6000
0.5000
0.4000
0.3000
0.2000
0.00000
Time, sec.
11.0000
0.2000 O vt 28051 18.0 PSTRIAG1 G1 1 1.2000
0.2000 + vt 24143 13.8 SYCCYN1G 1 1 1.2000
0.2000 * vt 24306 7.2 B CRK1-1 1 1 1.2000
0.2000 # vt 24319 13.8 EASTWOOD 1 1 1.2000
0.2000 X vt 25791 0.6 BR2WNDO1 1 1 1.2000

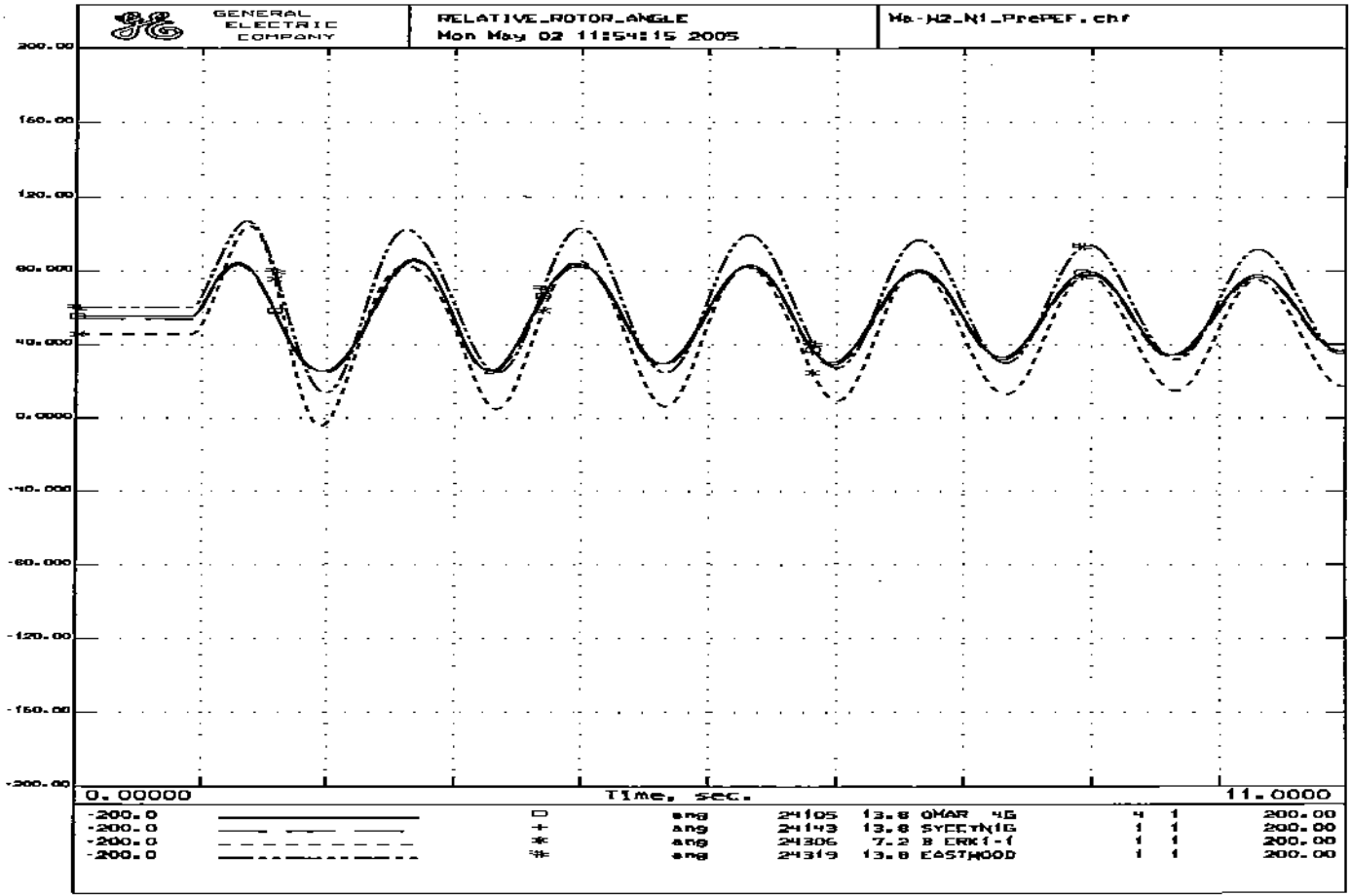
GENERAL ELECTRIC COMPANY
RELATIVE_ROTOR_ANGLE
Mon May 02 11:54:15 2005
Ma-H2_N1_PrePEF.chf
200.00
160.00
120.00
80.000
40.000
0.0000
-40.000
-80.000
-120.00
-160.00
-200.00
0.00000
Time, sec.
11.0000
-200.0 ang 24105 13.8 OMAR 4G 4 1 200.00
-200.0 ang 24143 13.8 SYCEYN1G 1 1 200.00
-200.0 ang 24306 7.2 B ERK1-1 1 1 200.00
-200.0 ang 24319 13.8 EASTWOOD 1 1 200.00

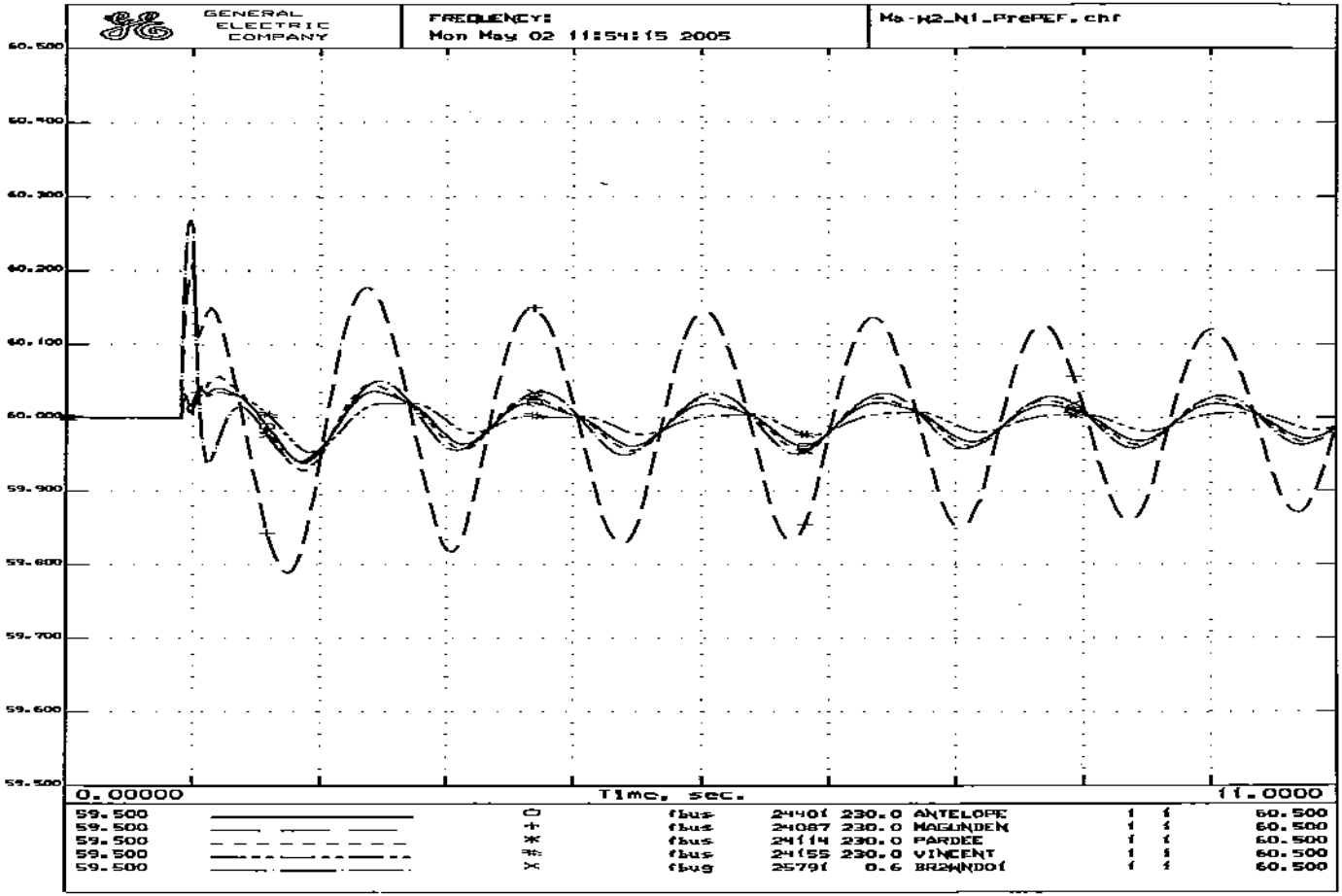
GENERAL ELECTRIC COMPANY
FREQUENCY:
Mon May 02 11:54:15 2005
Ma-W2_N1_PrePEF.chf
60.500
60.400
60.300
60.200
60.100
60.000
59.900
59.800
59.700
59.600
59.500
0.00000
Time, sec.
11.0000
59.500 ○ fbus 24401 230.0 ANTELOPE 1 1 60.500
59.500 + fbus 24087 230.0 MAGUNDEN 1 1 60.500
59.500 * fbus 24114 230.0 PARDEE 1 1 60.500
59.500 # fbus 24155 230.0 VINCENT 1 1 60.500
59.500 X fbus 25791 0.6 BRAWNDOI 1 1 60.500

```
PrePEF_High_SOM.sav
PrePEF.dyd
TITLE
Calpine Pastoria Add Stability Study: Loss of One 230-KV Line
6-CYCLE 3-Phase Fault at Mesa 230kV Bus
N-1 OUTAGE: Mesa-Antelope 230kV Line
SYSTEM STABILITY CASE - Me-A_N1_PrePEF.swt
PrePEF_High_SOM.sav + PrePEF.dyd + Me-A_N1_PrePEF.swt
RUN 10.0
CC
CC   ***CALPINE PASTORIA ADD DYNAMIC STABILITY ASSESSMENT***
CC   APPLY A 3-PHASE FAULT ON THE MESA 230-KV BUS
FB   0.0 "MESA CAL" 230
CC
CC   CLEAR FAULT IN 6 CYCLES
CFB  6.0 "MESA CAL" 230
CC
CC   REMOVE MESA-ANTELOPE 230-KV LINE
DL   6.0 "MESA CAL" 230, "ANTELOPE" 230, "1 "
```

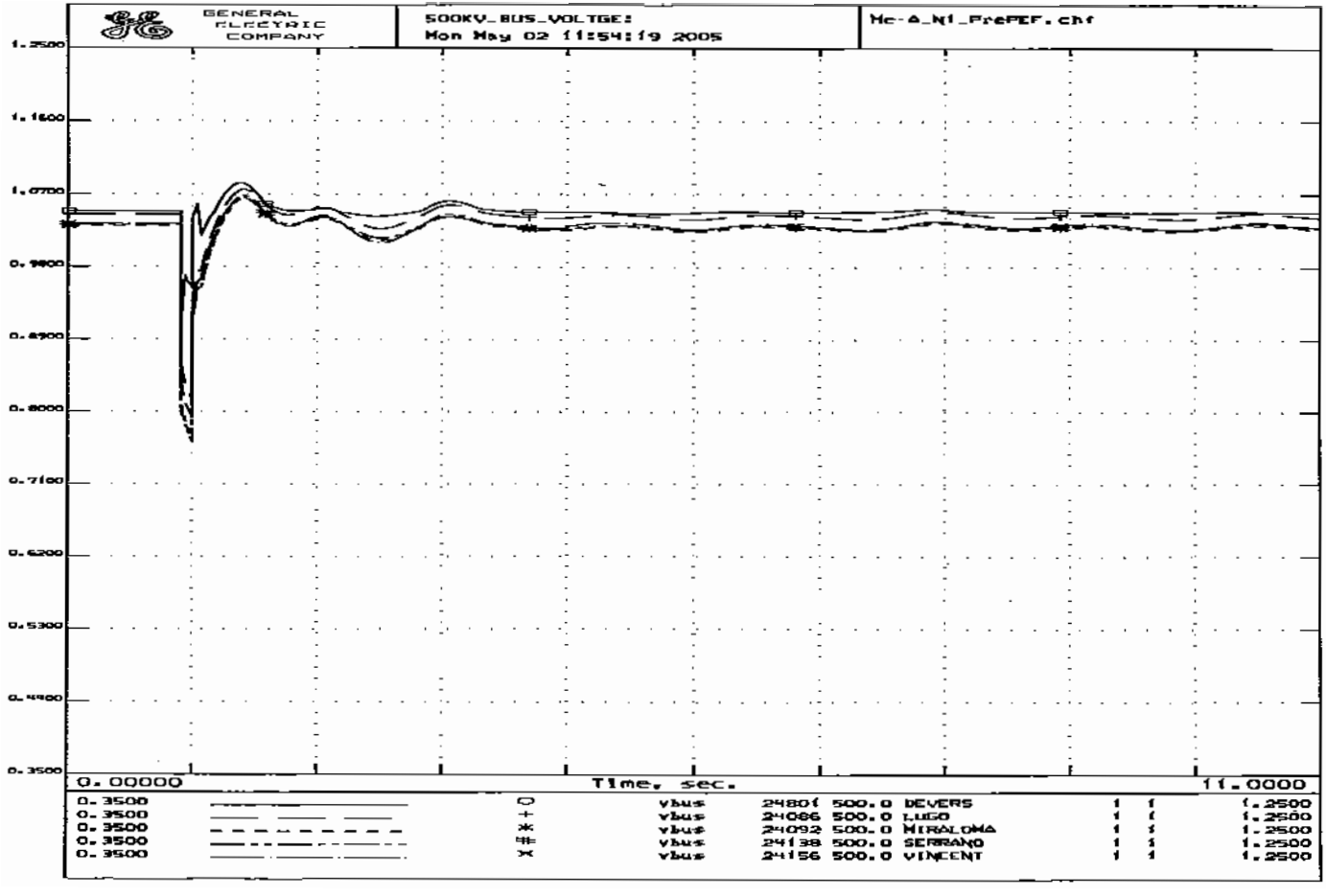
GENERAL ELECTRIC COMPANY
500KV_BUS_VOLTGE:
Mon May 02 11:54:19 2005
Mc-A_N1_PrePEF.chf
1.2500
1.1600
1.0700
0.9800
0.8900
0.8000
0.7100
0.6200
0.5300
0.4400
0.3500
0.00000
Time, sec.
11.0000
0.3500 O vbus 24801 500.0 DEVERS 1 1 1.2500
0.3500 + vbus 24086 500.0 LUGO 1 1 1.2500
0.3500 * vbus 24092 500.0 MIRALOMA 1 1 1.2500
0.3500 # vbus 24138 500.0 SERRANO 1 1 1.2500
0.3500 x vbus 24156 500.0 VINCENT 1 1 1.2500

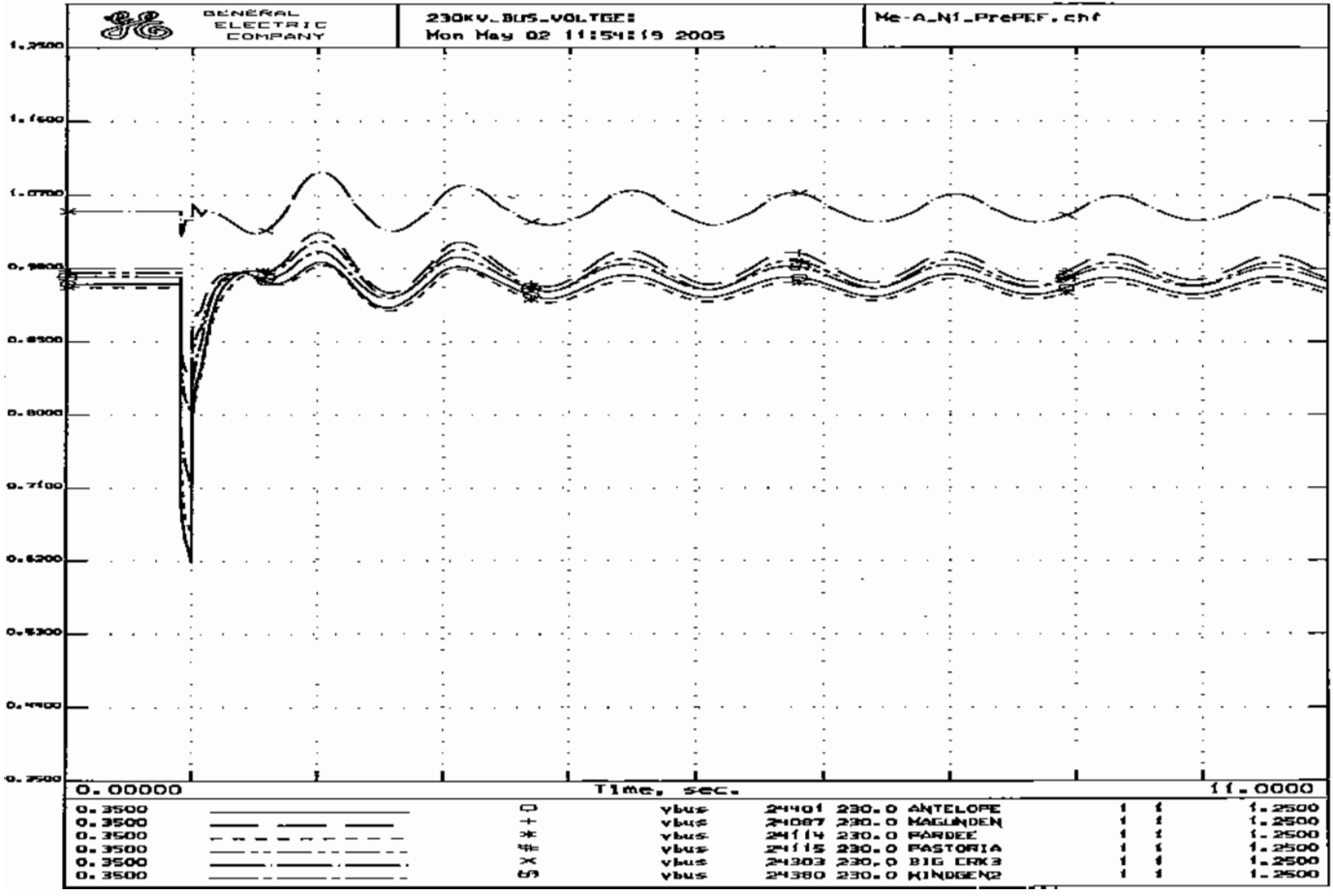
GENERAL ELECTRIC COMPANY
230KV_BUS_VOLTGE:
Mon May 02 11:54:19 2005
Me-A_N1_PrePEF.chf
1.2500
1.1500
1.0500
0.9500
0.8500
0.8000
0.7500
0.6500
0.5500
0.4500
0.3500
0.00000
Time, sec.
11.0000
0.3500 ○ vbus 24401 230.0 ANTELOPE 1 1 1.2500
0.3500 + vbus 24087 230.0 MAGUNDEN 1 1 1.2500
0.3500 * vbus 24114 230.0 PARDEE 1 1 1.2500
0.3500 # vbus 24115 230.0 PASTORIA 1 1 1.2500
0.3500 × vbus 24303 230.0 BIG CRK3 1 1 1.2500
0.3500 vbus 24380 230.0 KINGGEN2 1 1 1.2500

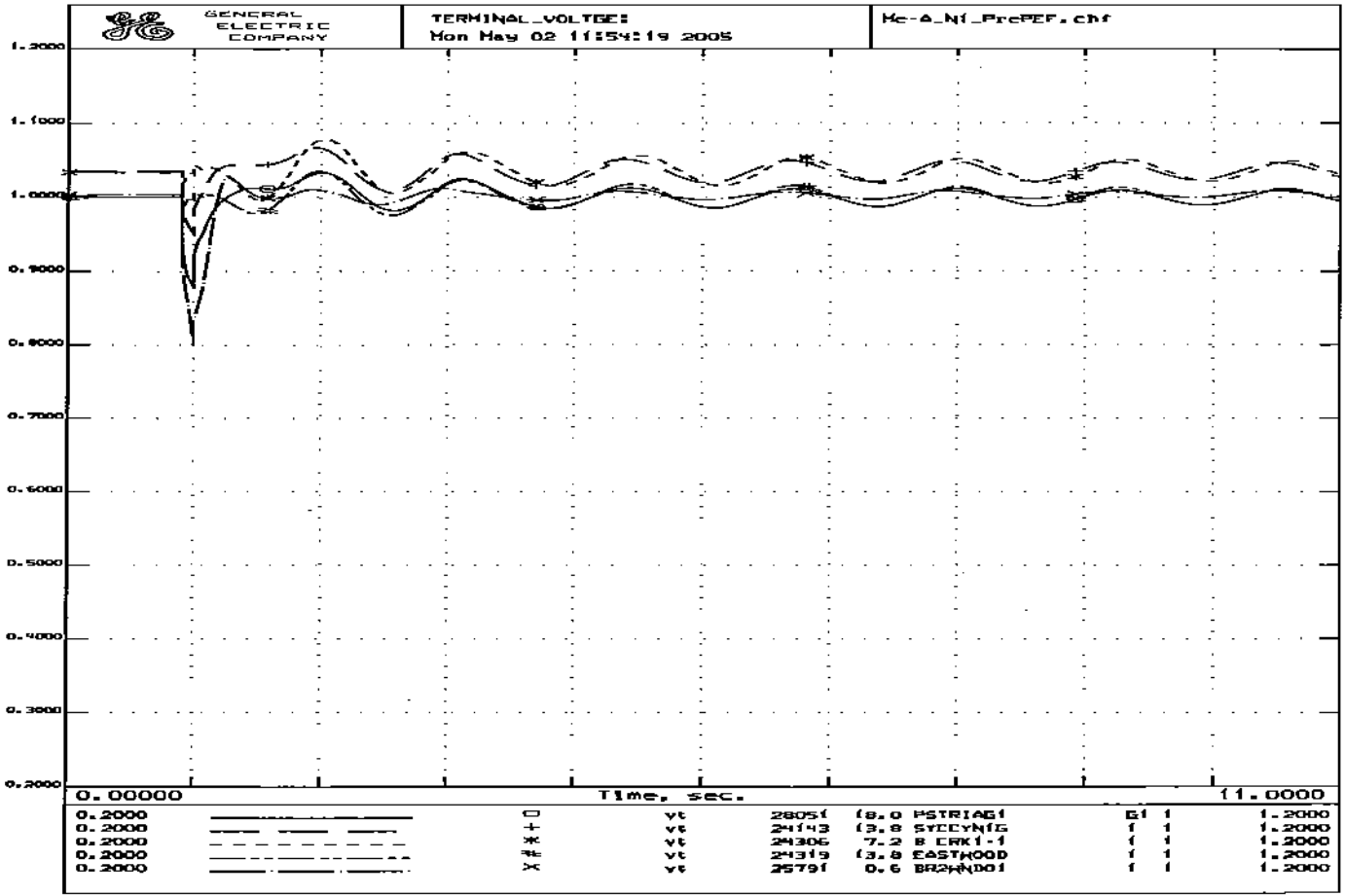
GENERAL ELECTRIC COMPANY
TERMINAL_VOLTGE:
Mon May 02 11:54:19 2005
Mc-A_Ni_PrcPEF.chf
1.2000
1.1000
1.0000
0.9000
0.8000
0.7000
0.6000
0.5000
0.4000
0.3000
0.2000
0.00000
Time, sec.
11.0000
0.2000 □ vt 28051 (8.0 PSTRIAG1 G1 1 1.2000
0.2000 + vt 24143 (3.8 SYCCYNIG 1 1 1.2000
0.2000 * vt 24306 7.2 8 ERK1-1 1 1 1.2000
0.2000 ✱ vt 24319 (3.8 EASTWOOD 1 1 1.2000
0.2000 × vt 25791 0.6 BR2WNDO1 1 1 1.2000

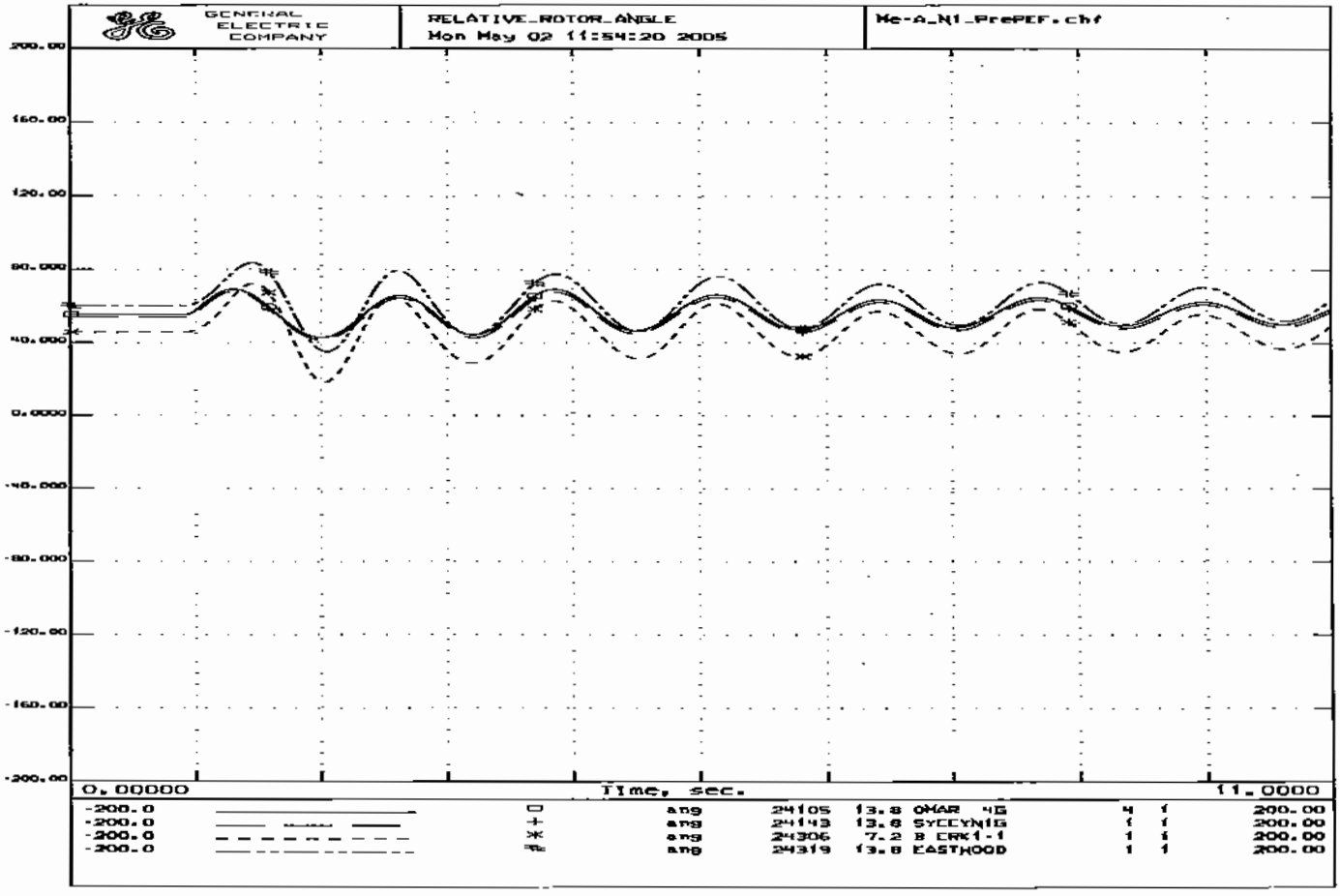
GENERAL ELECTRIC COMPANY
RELATIVE_ROTOR_ANGLE
Mon May 02 11:54:20 2005
Me-A_N1_PrePEF.chf
200.00
160.00
120.00
80.000
40.000
0.0000
-40.000
-80.000
-120.00
-160.00
-200.00
0.00000
Time, sec.
11.0000
-200.0 ang 24105 13.8 OMAR 4G 4 1 200.00
-200.0 ang 24143 13.8 SYCCYN1G 1 1 200.00
-200.0 ang 24306 7.2 B CRK1-1 1 1 200.00
-200.0 ang 24319 13.8 EASTWOOD 1 1 200.00

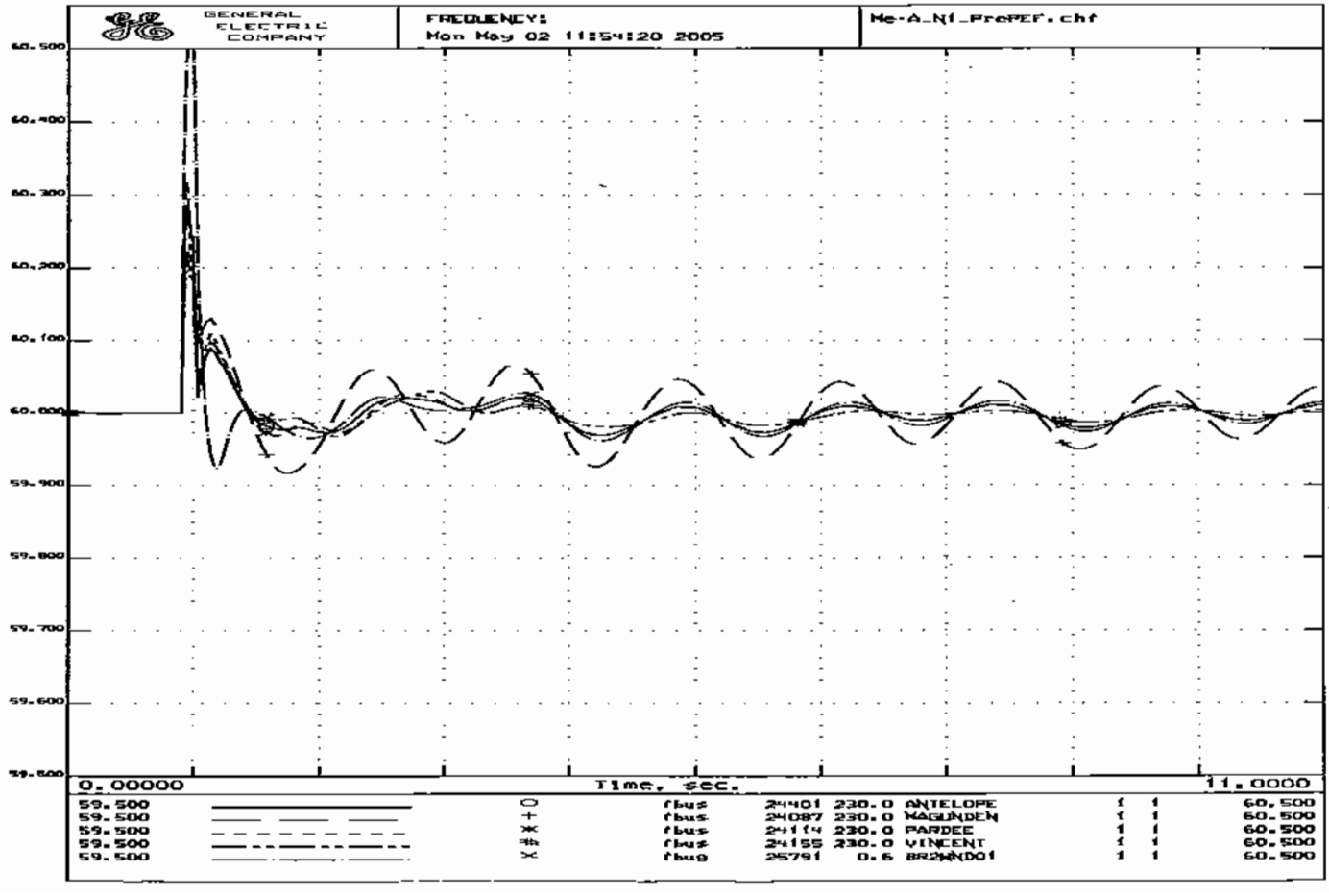
GENERAL ELECTRIC COMPANY
FREQUENCY:
Mon May 02 11:54:20 2005
Me-A_N1_PrePEF.chf
60.500
60.400
60.300
60.200
60.100
60.000
59.900
59.800
59.700
59.600
59.500
0.00000
Time, sec.
11.0000
59.500 ○ fbus 24401 230.0 ANTELOPE 1 1 60.500
59.500 + fbus 24087 230.0 WAGUNDEN 1 1 60.500
59.500 ✳ fbus 24114 230.0 PARDEE 1 1 60.500
59.500 fbus 24155 230.0 VINCENT 1 1 60.500
59.500 ✕ fbus 25791 0.6 BR2WNDO1 1 1 60.500

```
PrePEF_High_SOM.sav
PrePEF.dyd
TITLE
Calpine Pastoria Add Stability Study: Loss of One 230-KV Line
6-CYCLE 3-Phase Fault at Pardee 230kV Bus
N-1 OUTAGE: Antelope-Pardee 230kV Line
SYSTEM STABILITY CASE - P-A_N1_PrePEF.swt
PrePEF_High_SOM.sav + PrePEF.dyd + P-A_N1_PrePEF.swt
RUN 10.0
CC
CC   ***CALPINE PASTORIA ADD DYNAMIC STABILITY ASSESSMENT***
CC   APPLY A 3-PHASE FAULT ON THE PARDEE 230-KV BUS
FB   0.0 "PARDEE   " 230
CC
CC   CLEAR FAULT IN 6 CYCLES
CFB 6.0 "PARDEE   " 230
CC
CC   REMOVE ANTELOPE-PARDEE 230-KV LINE
DL   6.0 "ANTELOPE" 230. "PARDEE   " 230. "1 "
```

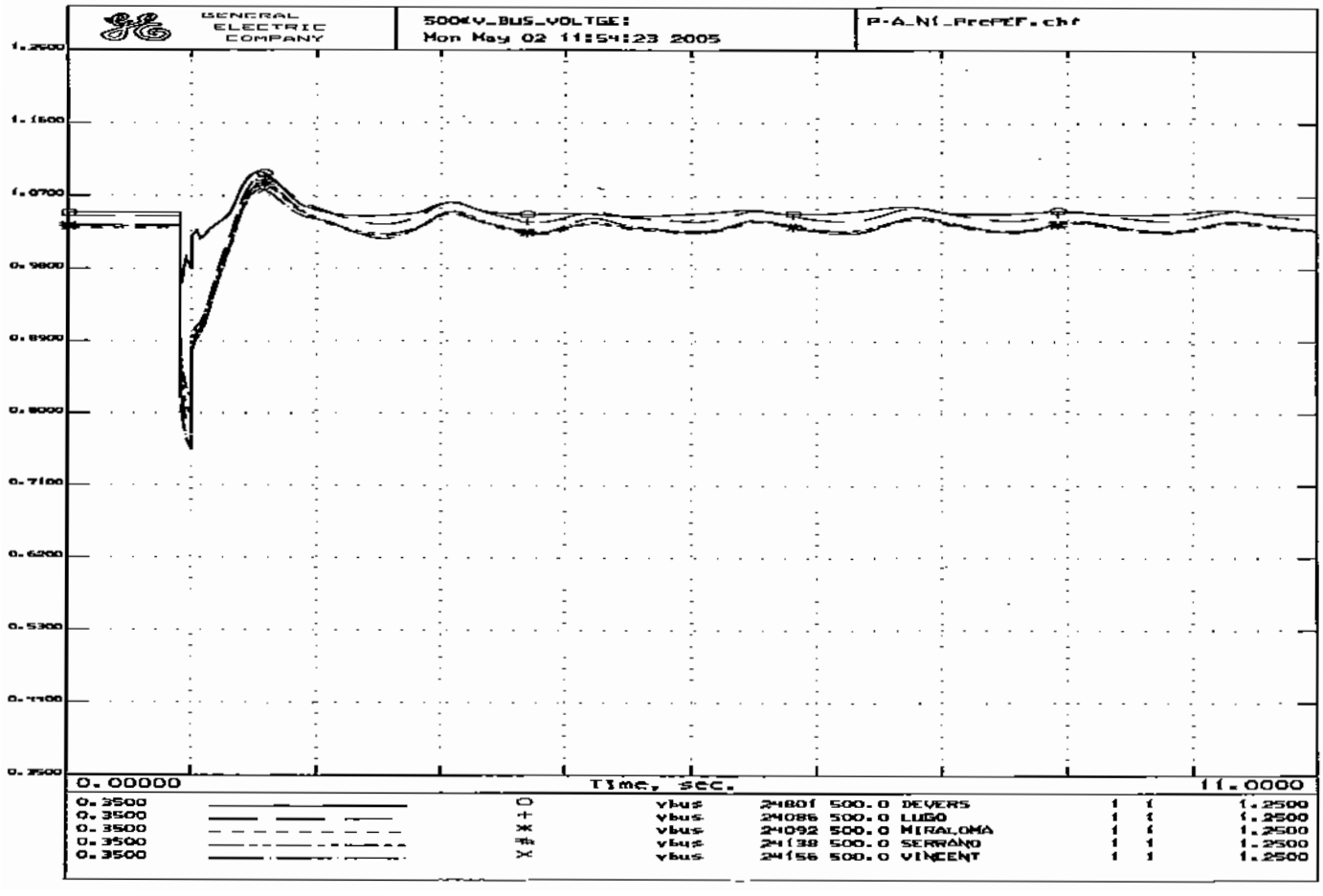
GENERAL ELECTRIC COMPANY
500KV_BUS_VOLTGE:
Mon May 02 11:54:23 2005
P-A_N1_PrePEF.chf
1.2500
1.1500
1.0700
0.9800
0.8900
0.8000
0.7100
0.6200
0.5300
0.4400
0.3500
0.00000
Time, sec.
11.0000
0.3500 O vbus 24801 500.0 DEVERS 1 1 1.2500
0.3500 + vbus 24086 500.0 LUGO 1 1 1.2500
0.3500 * vbus 24092 500.0 MIRALOMA 1 1 1.2500
0.3500 vbus 24138 500.0 SERRANO 1 1 1.2500
0.3500 X vbus 24156 500.0 VINCENT 1 1 1.2500

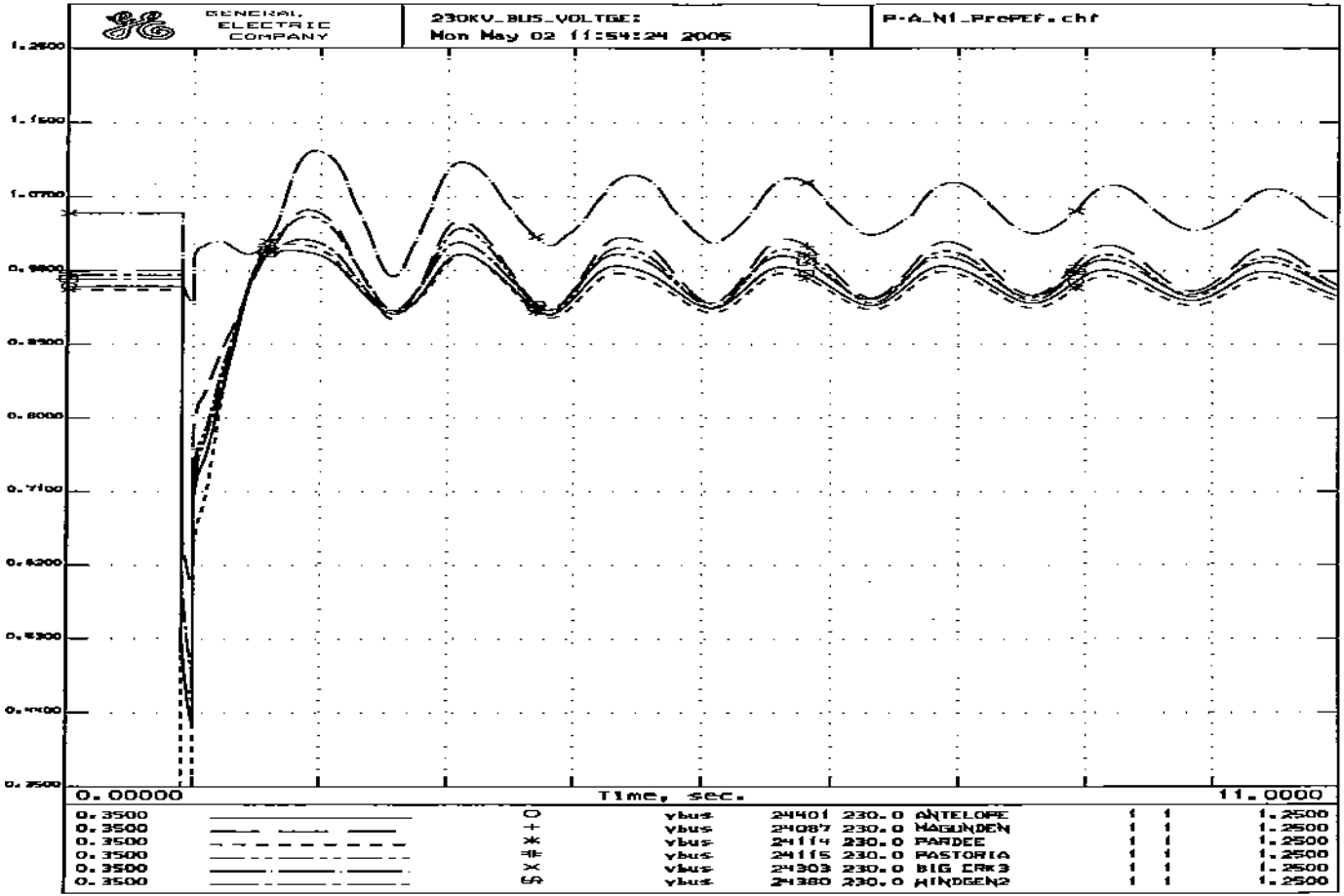
GENERAL ELECTRIC COMPANY
230KV_BUS_VOLTGE:
Mon May 02 11:54:24 2005
P-A_N1_PrePEF.chf
1.2500
1.1500
1.0700
0.9800
0.8900
0.8000
0.7100
0.6200
0.5300
0.4400
0.2500
0.00000
Time, sec.
11.0000
0.3500 O vbus 24401 230.0 ANTELOPE 1 1 1.2500
0.3500 + vbus 24087 230.0 MAGUNDEN 1 1 1.2500
0.3500 * vbus 24114 230.0 PARDEE 1 1 1.2500
0.3500 # vbus 24115 230.0 PASTORIA 1 1 1.2500
0.3500 x vbus 24303 230.0 BIG CRK3 1 1 1.2500
0.3500 vbus 24380 230.0 WINDGEN2 1 1 1.2500

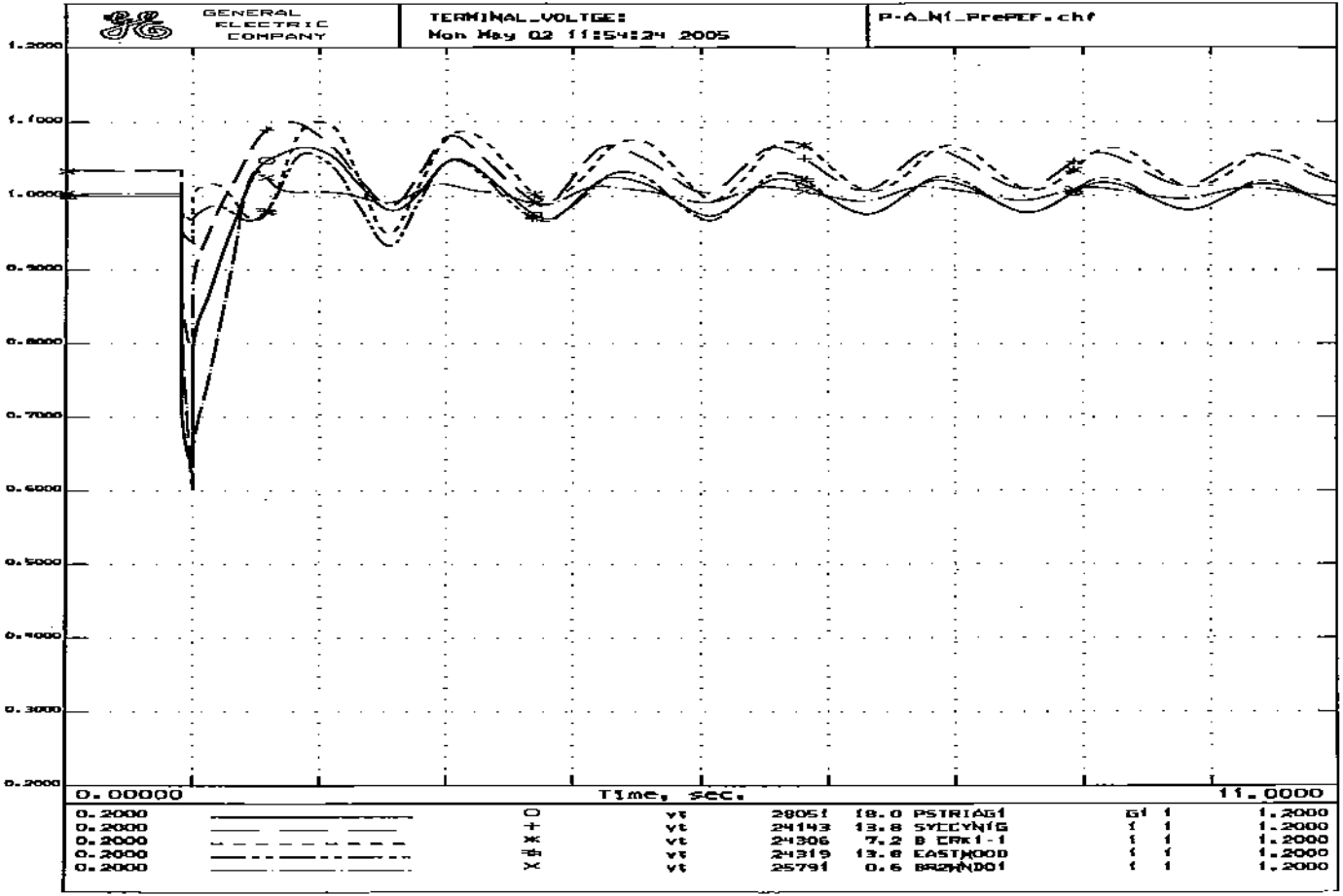
GENERAL ELECTRIC COMPANY
TERMINAL_VOLTGE:
Mon May 02 11:54:24 2005
P-A_N1_PrePEF.chf
1.2000
1.1000
1.0000
0.9000
0.8000
0.7000
0.6000
0.5000
0.4000
0.3000
0.2000
0.00000
Time, sec.
11.0000
0.2000 O vt 28051 18.0 PSTRIAG1 G1 1 1.2000
0.2000 + vt 24143 13.8 SYCCYNIG 1 1 1.2000
0.2000 * vt 24306 7.2 B CRK1-1 1 1 1.2000
0.2000 # vt 24319 13.8 EASTWOOD 1 1 1.2000
0.2000 X vt 25791 0.6 BRZWNDO1 1 1 1.2000

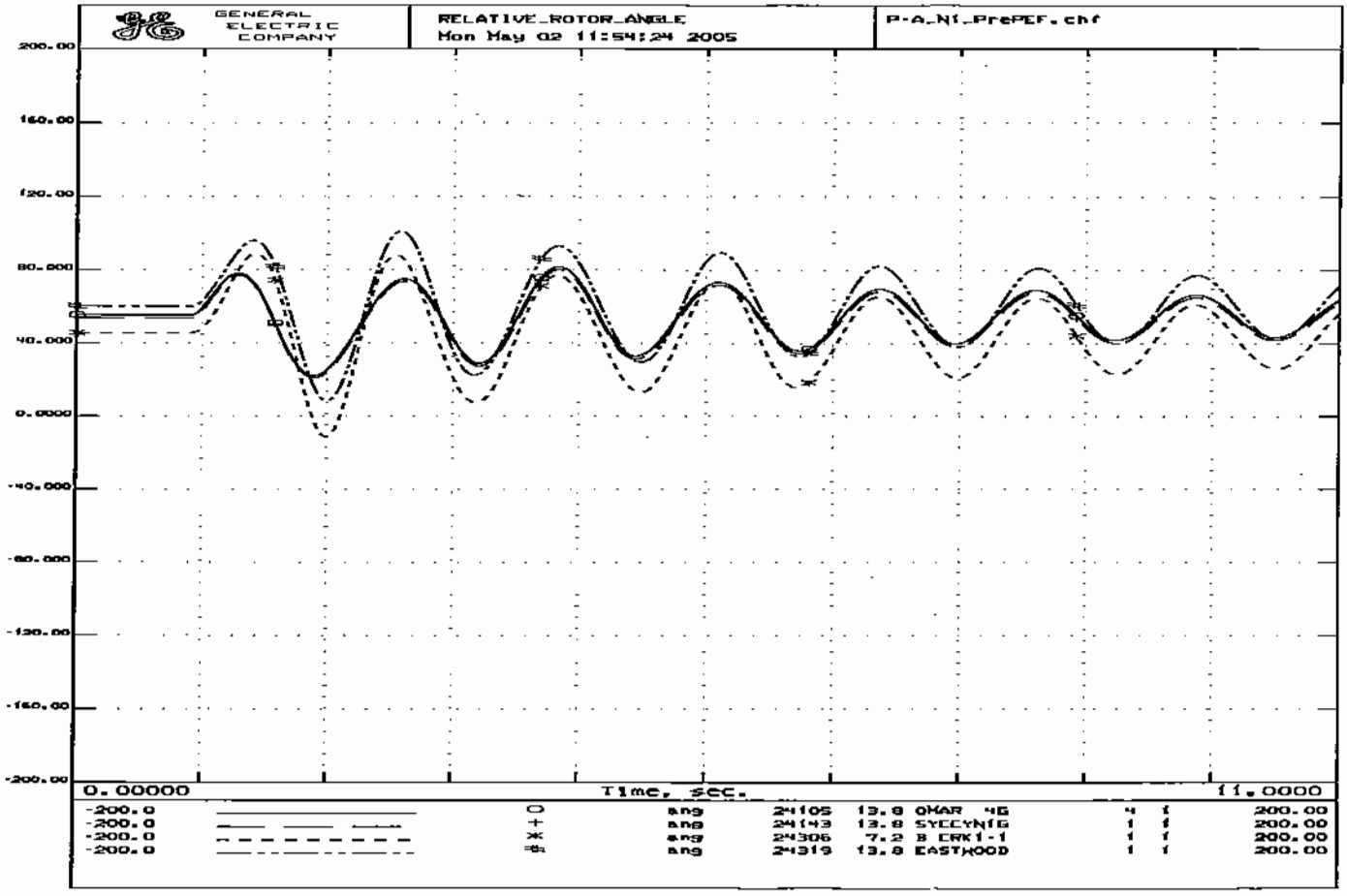
GENERAL ELECTRIC COMPANY
RELATIVE_ROTOR_ANGLE
Mon May 02 11:54:24 2005
P-A_N1_PrePEF.chf
200.00
160.00
120.00
80.000
40.000
0.0000
-40.000
-80.000
-120.00
-160.00
-200.00
0.00000
Time, sec.
11.0000
-200.0 ang 24105 13.8 OMAR 4G 4 1 200.00
-200.0 ang 24143 13.8 SYCCYNIG 1 1 200.00
-200.0 ang 24306 7.2 8 ERK1-1 1 1 200.00
-200.0 ang 24319 13.8 EASTWOOD 1 1 200.00

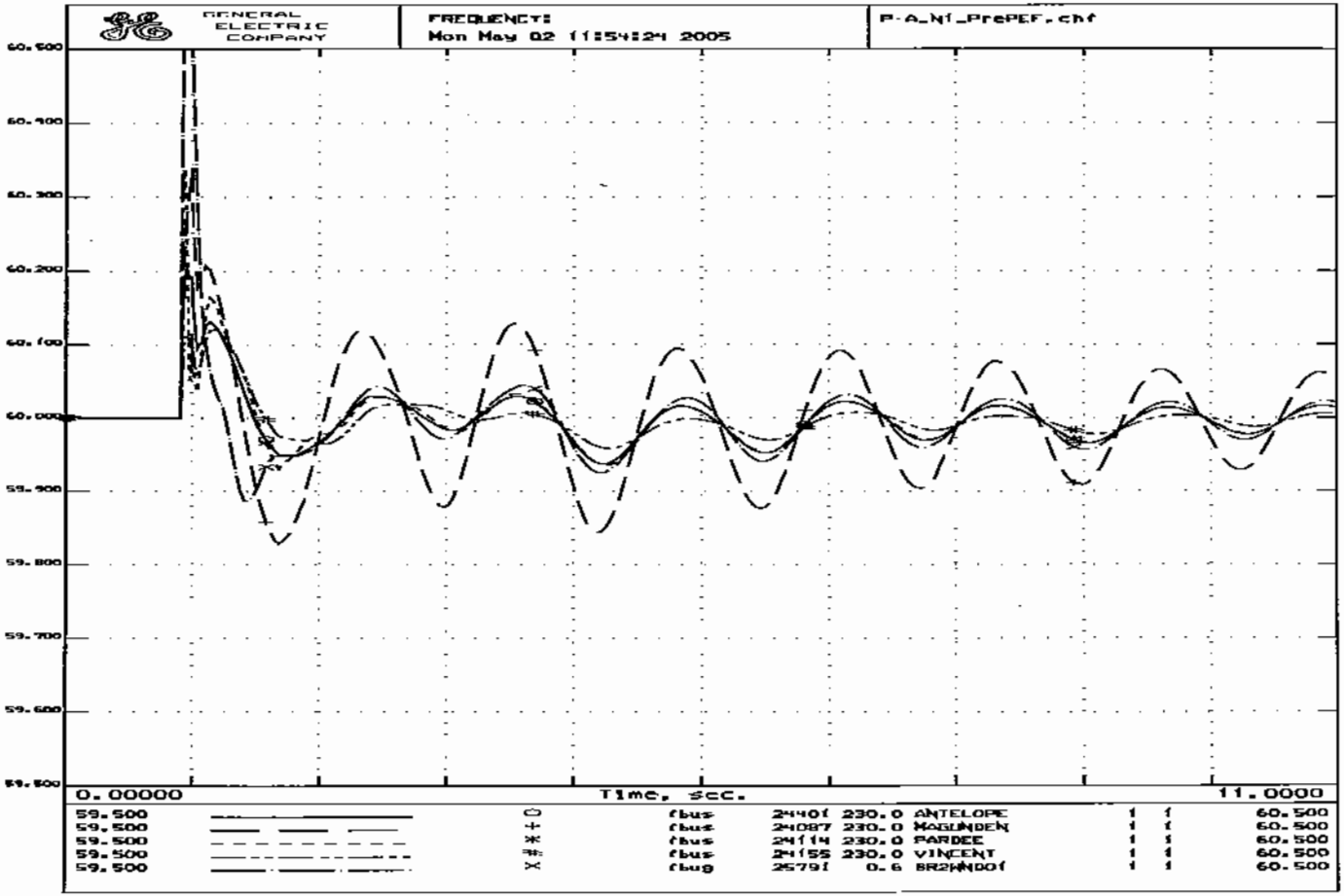
GENERAL ELECTRIC COMPANY
FREQUENCY:
Mon May 02 11:54:24 2005
P-A_NI_PrePEF.chf
60.500
60.400
60.300
60.200
60.100
60.000
59.900
59.800
59.700
59.600
59.500
0.00000
Time, sec.
11.0000
59.500 O fbus 24401 230.0 ANTELOPE 1 1 60.500
59.500 + fbus 24087 230.0 MAGUNDEN 1 1 60.500
59.500 * fbus 24114 230.0 PARDEE 1 1 60.500
59.500 # fbus 24155 230.0 VINCENT 1 1 60.500
59.500 X fbus 25791 0.6 BR2WNDOF 1 1 60.500

```
PrePEF_High_SOM.sav
PrePEF.dyd
TITLE
Calpine Pastoria Add Stability Study: Loss of One 230-KV Line
6-CYCLE 3-Phase Fault at Pardee 230kV Bus
N-1 OUTAGE: Pardee-Bailey 230kV Line
SYSTEM STABILITY CASE - P-B_N1_PrePEF.swt
PrePEF_High_SOM.sav + PrePEF.dyd + P-B_N1_PrePEF.swt
RUN 10.0
CC
CC   ***CALPINE PASTORIA ADD DYNAMIC STABILITY ASSESSMENT***
CC   APPLY A 3-PHASE FAULT ON THE PARDEE 230-KV BUS
FB   0.0 "PARDEE   " 230
CC
CC   CLEAR FAULT IN 6 CYCLES
CFB  6.0 "PARDEE   " 230
CC
CC   REMOVE PARDEE-BAILEY 230-KV LINE
DL   6.0 "PARDEE   " 230. "BAILEY   " 230. "1 "
```

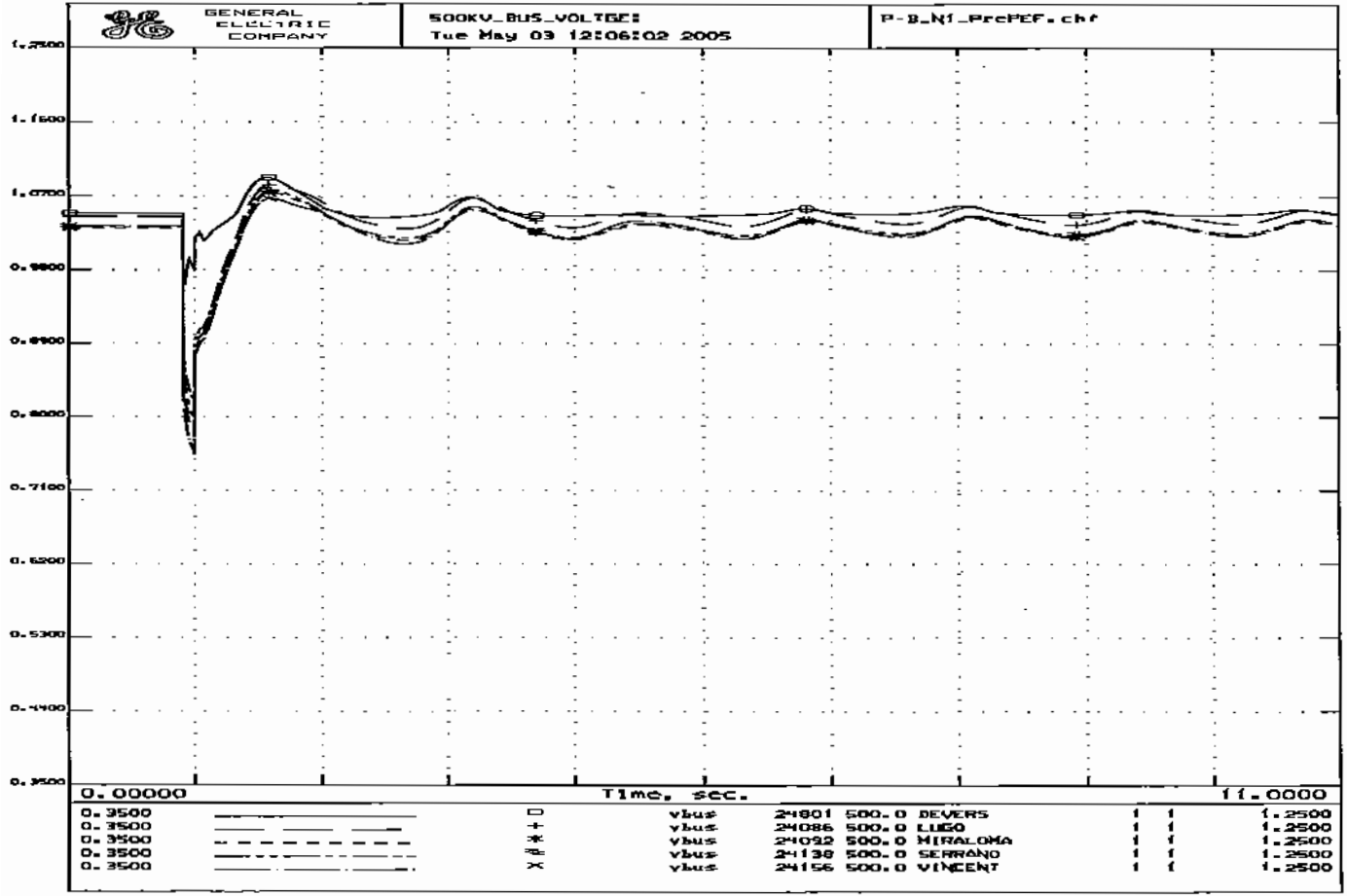
GENERAL ELECTRIC COMPANY
500KV_BUS_VOLTGE:
Tue May 03 12:06:02 2005
P-B_N1_PrePEF.chf
1.2500
1.1500
1.0500
0.9500
0.8500
0.7500
0.6500
0.5500
0.4500
0.3500
0.00000
Time, sec.
11.0000
0.3500 □ vbus 24801 500.0 DEVERS 1 1 1.2500
0.3500 + vbus 24086 500.0 LUGO 1 1 1.2500
0.3500 * vbus 24092 500.0 MIRALOMA 1 1 1.2500
0.3500 vbus 24138 500.0 SERRANO 1 1 1.2500
0.3500 × vbus 24156 500.0 VINCENT 1 1 1.2500

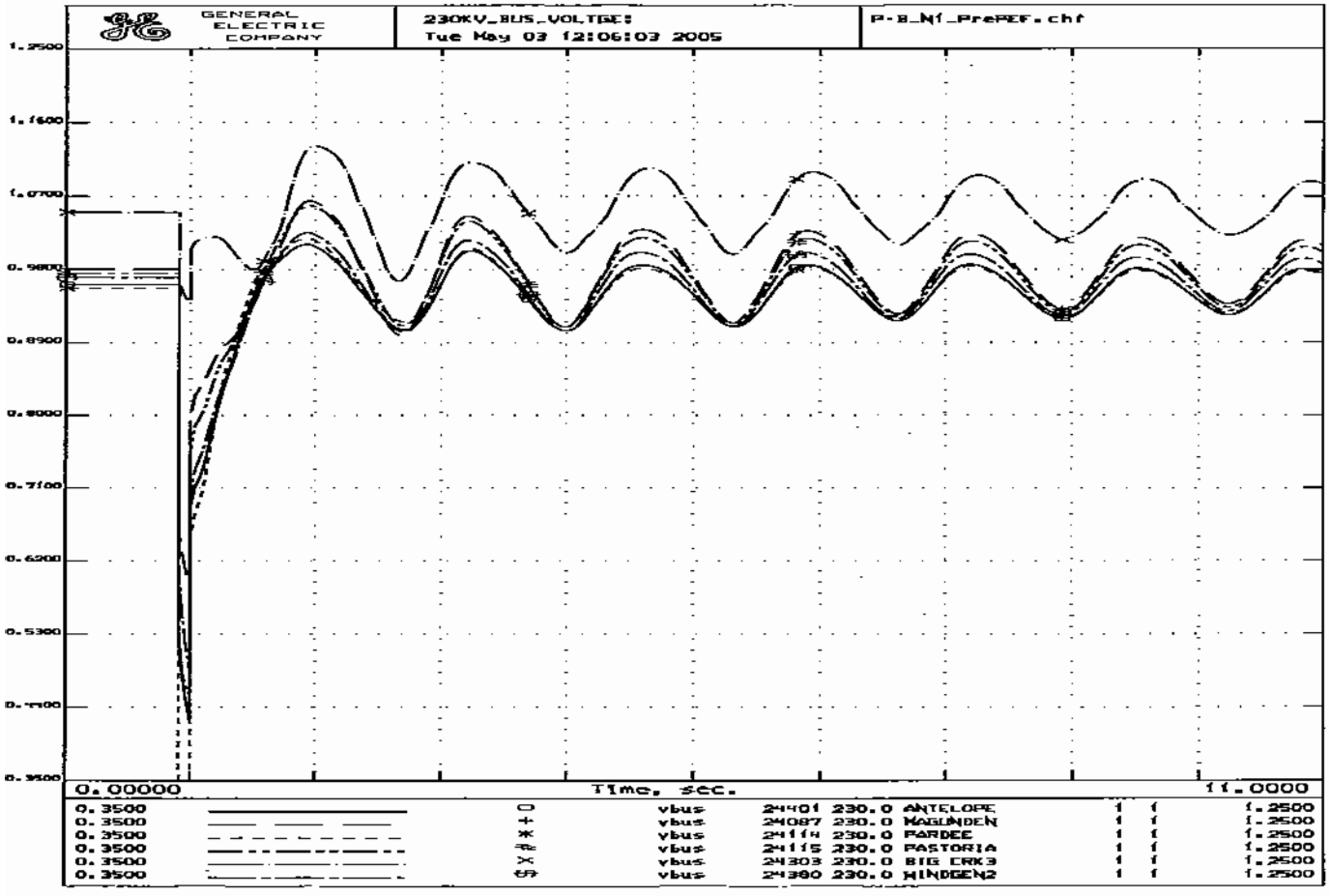
GENERAL ELECTRIC COMPANY
230KV_BUS_VOLTAGE:
Tue May 03 12:06:03 2005
P-8_N1_PrePEF.chf
1.2500
1.1600
1.0700
0.9800
0.8900
0.8000
0.7100
0.6200
0.5300
0.4400
0.3500
0.00000
Time, sec.
11.0000
0.3500 vbus 24401 230.0 ANTELOPE 1 1 1.2500
0.3500 vbus 24087 230.0 MAGUNDEN 1 1 1.2500
0.3500 vbus 24114 230.0 FARDEE 1 1 1.2500
0.3500 vbus 24115 230.0 PASTORIA 1 1 1.2500
0.3500 vbus 24303 230.0 BIG CRK3 1 1 1.2500
0.3500 vbus 24300 230.0 WINDGEN2 1 1 1.2500

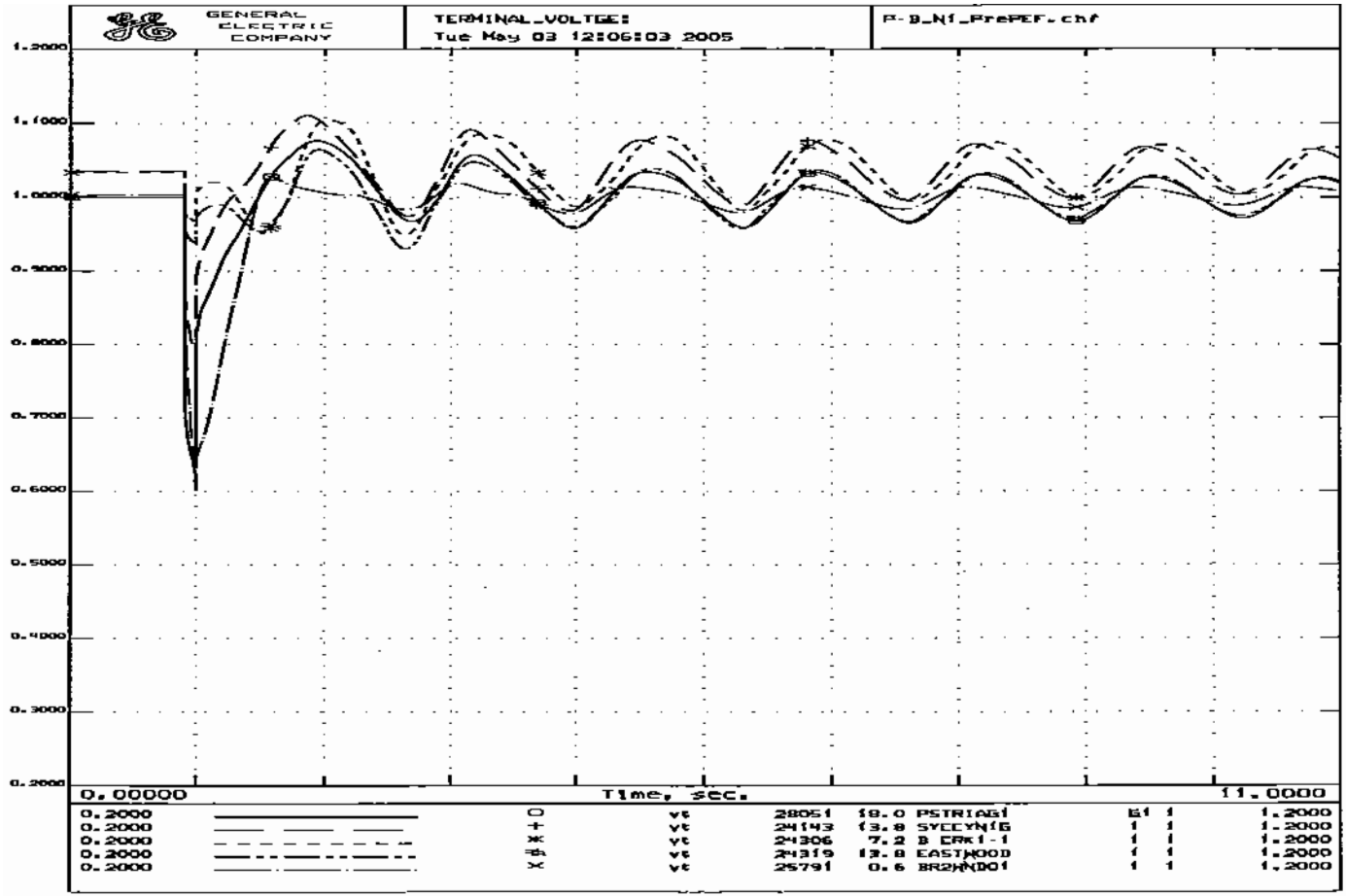
GENERAL ELECTRIC COMPANY
TERMINAL_VOLTGE:
Tue May 03 12:06:03 2005
P-B_N1_PrePEF.chf
1.2000
1.1000
1.0000
0.9000
0.8000
0.7000
0.6000
0.5000
0.4000
0.3000
0.2000
0.00000
Time, sec.
11.0000
0.2000 ○ vt 28051 19.0 PSTRIAG1 E1 1 1.2000
0.2000 + vt 24143 13.8 SYCCYN1G 1 1 1.2000
0.2000 ✳ vt 24306 7.2 B CRK1-1 1 1 1.2000
0.2000 ⊞ vt 24319 13.8 EASTWOOD 1 1 1.2000
0.2000 × vt 25791 0.6 BR2WNDO1 1 1 1.2000

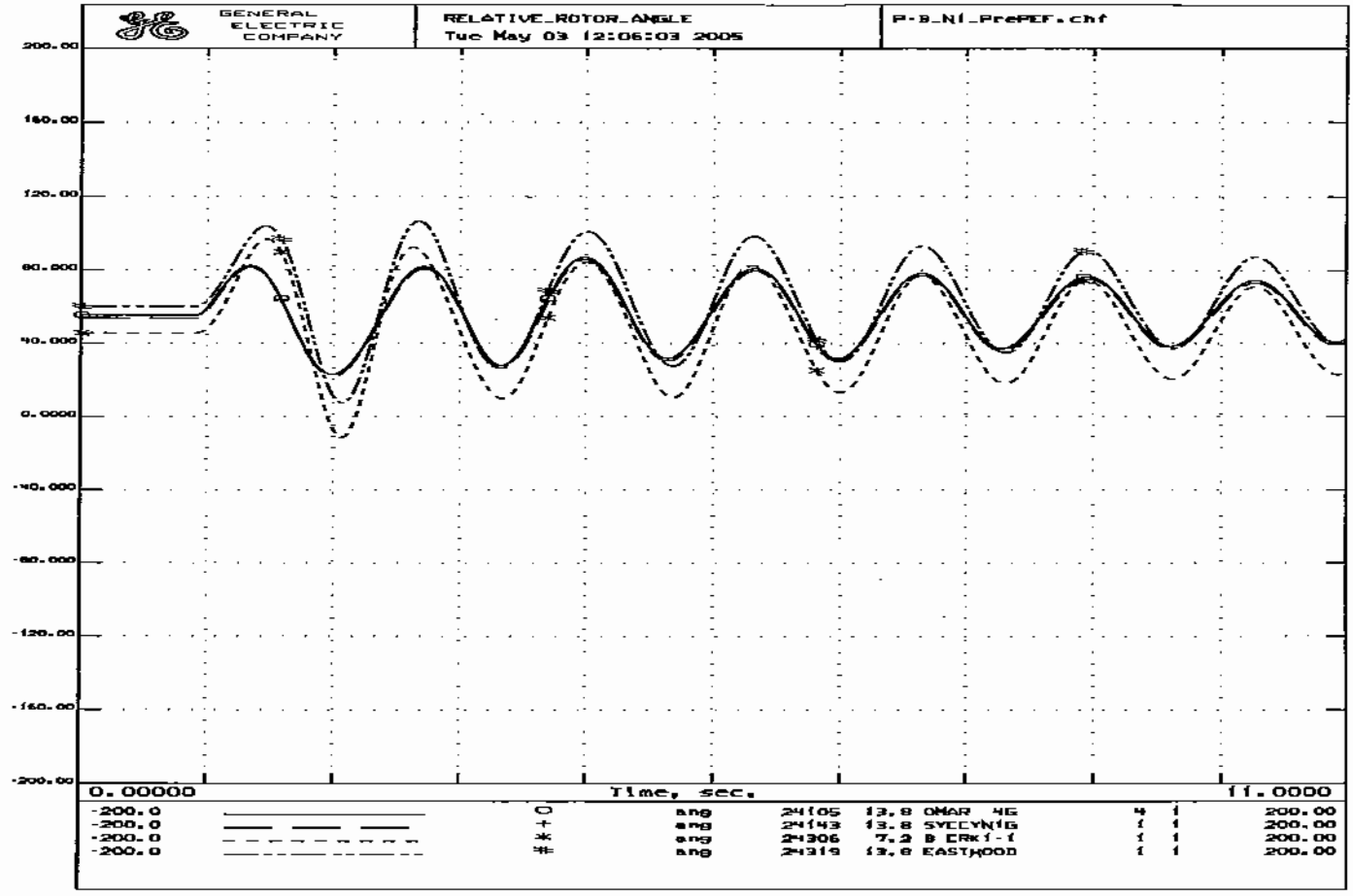
GENERAL ELECTRIC COMPANY
RELATIVE_ROTOR_ANGLE
Tue May 03 12:06:03 2005
P-B_N1_PrePEF.chf
200.00
160.00
120.00
80.000
40.000
0.0000
-40.000
-80.000
-120.00
-160.00
-200.00
0.00000
Time, sec.
11.0000
-200.0 ○ ang 24105 13.8 OMAR 4G 4 1 200.00
-200.0 + ang 24143 13.8 SYCCYNIG 1 1 200.00
-200.0 * ang 24306 7.2 B ERK1-1 1 1 200.00
-200.0 # ang 24319 13.8 EASTWOOD 1 1 200.00

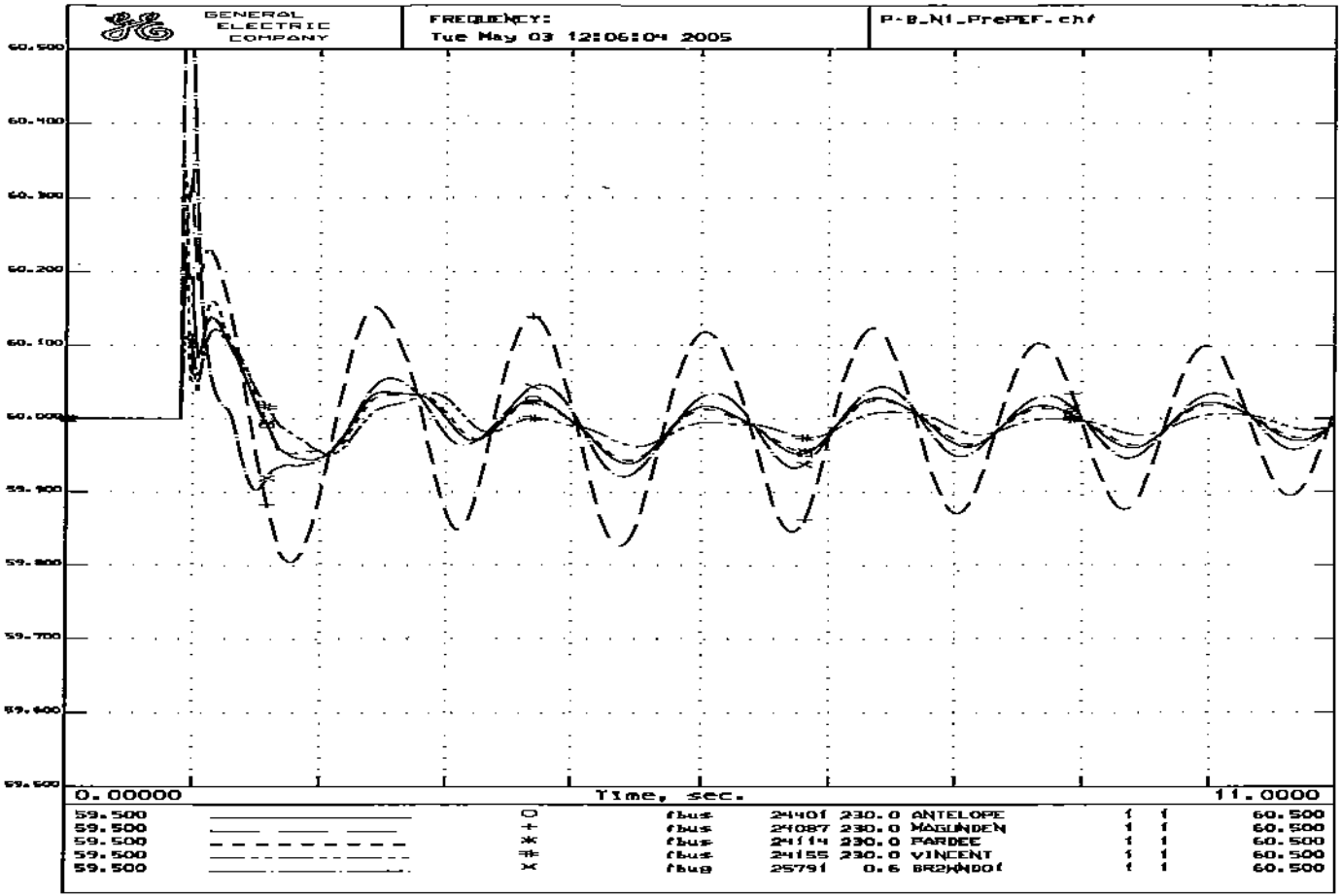
GENERAL ELECTRIC COMPANY
FREQUENCY:
Tue May 03 12:06:04 2005
P-B_N1_PrePEF.chf
60.500
60.400
60.300
60.200
60.100
60.000
59.900
59.800
59.700
59.600
59.500
0.00000
Time, sec.
11.0000
59.500 ○ fbus 24401 230.0 ANTELOPE 1 1 60.500
59.500 + fbus 24087 230.0 MAGUNDEN 1 1 60.500
59.500 * fbus 24114 230.0 PARDEE 1 1 60.500
59.500 # fbus 24155 230.0 VINCENT 1 1 60.500
59.500 × fbus 25791 0.6 BR2WNDOF 1 1 60.500

```
PrePEF_High_SOM.sav
PrePEF.dyd
TITLE
Calpine Pastoria Add Stability Study: Loss of One 230-KV Line
6-CYCLE 3-Phase Fault at Pardee 230kV Bus
N-1 OUTAGE: Pardee-Pastoria 230kV Line
SYSTEM STABILITY CASE - P-Pas_N1_PrePEF.swt
PrePEF_High_SOM.sav + PrePEF.dyd + P-Pas_N1_PrePEF.swt
RUN 10.0
CC
CC   ***CALPINE PASTORIA ADD DYNAMIC STABILITY ASSESSMENT***
CC   APPLY A 3-PHASE FAULT ON THE PARDEE 230-KV BUS
FB   0.0 "PARDEE   " 230
CC
CC   CLEAR FAULT IN 6 CYCLES
CFB 6.0 "PARDEE   " 230
CC
CC   REMOVE PARDEE-PASTORIA 230-KV LINE
DL   6.0 "PARDEE   " 230. "PASTORIA" 230. "1 "
```

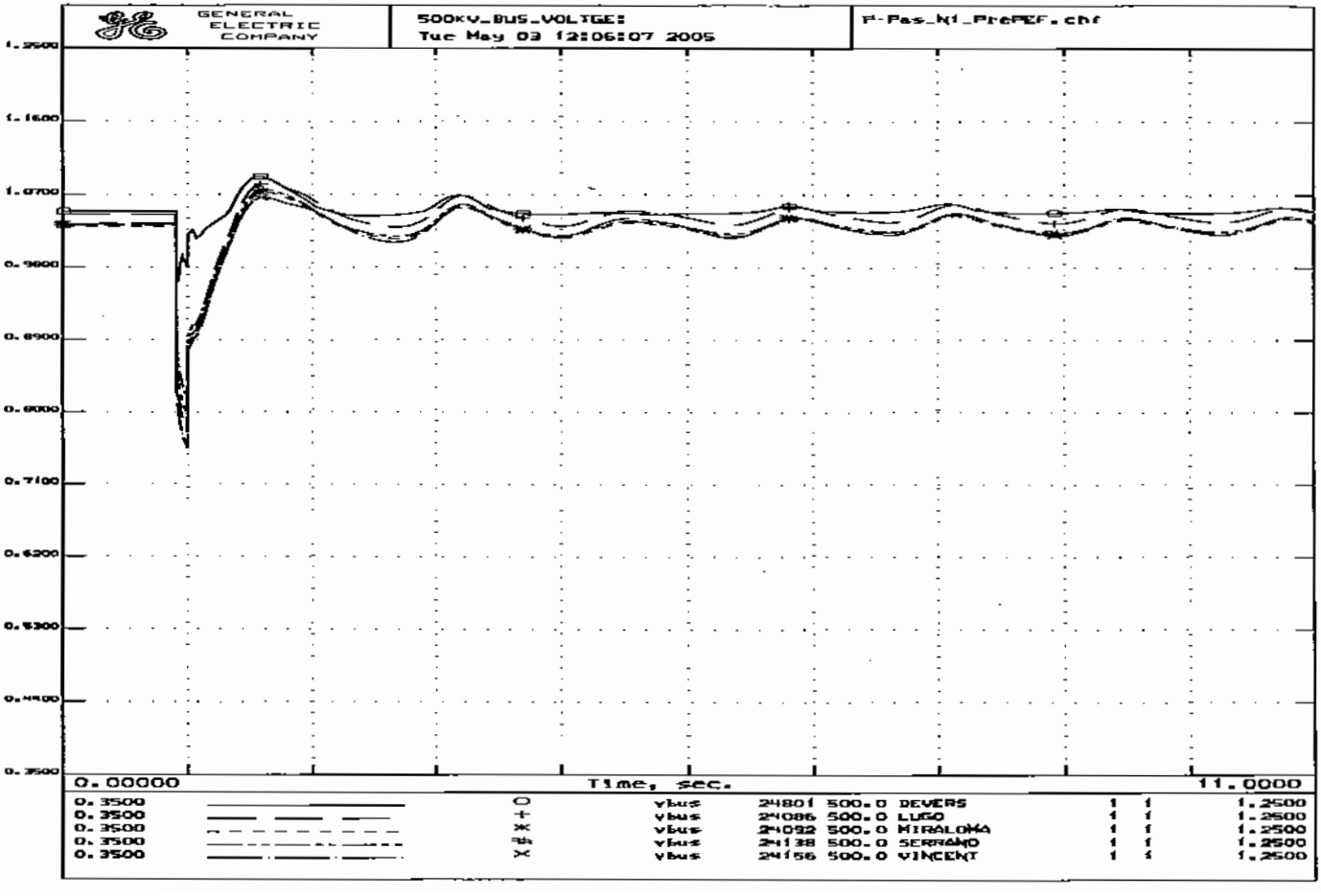
GENERAL ELECTRIC COMPANY
500KV_BUS_VOLTGE:
Tue May 03 12:06:07 2005
F-Pas_N1_PreREF.chf
1.2500
1.1600
1.0700
0.9800
0.8900
0.8000
0.7100
0.6200
0.5300
0.4400
0.3500
0.00000
Time, sec.
11.0000
0.3500 O vbus 24801 500.0 DEVERS 1 1 1.2500
0.3500 + vbus 24086 500.0 LUGO 1 1 1.2500
0.3500 * vbus 24092 500.0 MIRALOMA 1 1 1.2500
0.3500 vbus 24138 500.0 SERRANO 1 1 1.2500
0.3500 X vbus 24156 500.0 VINCENT 1 1 1.2500

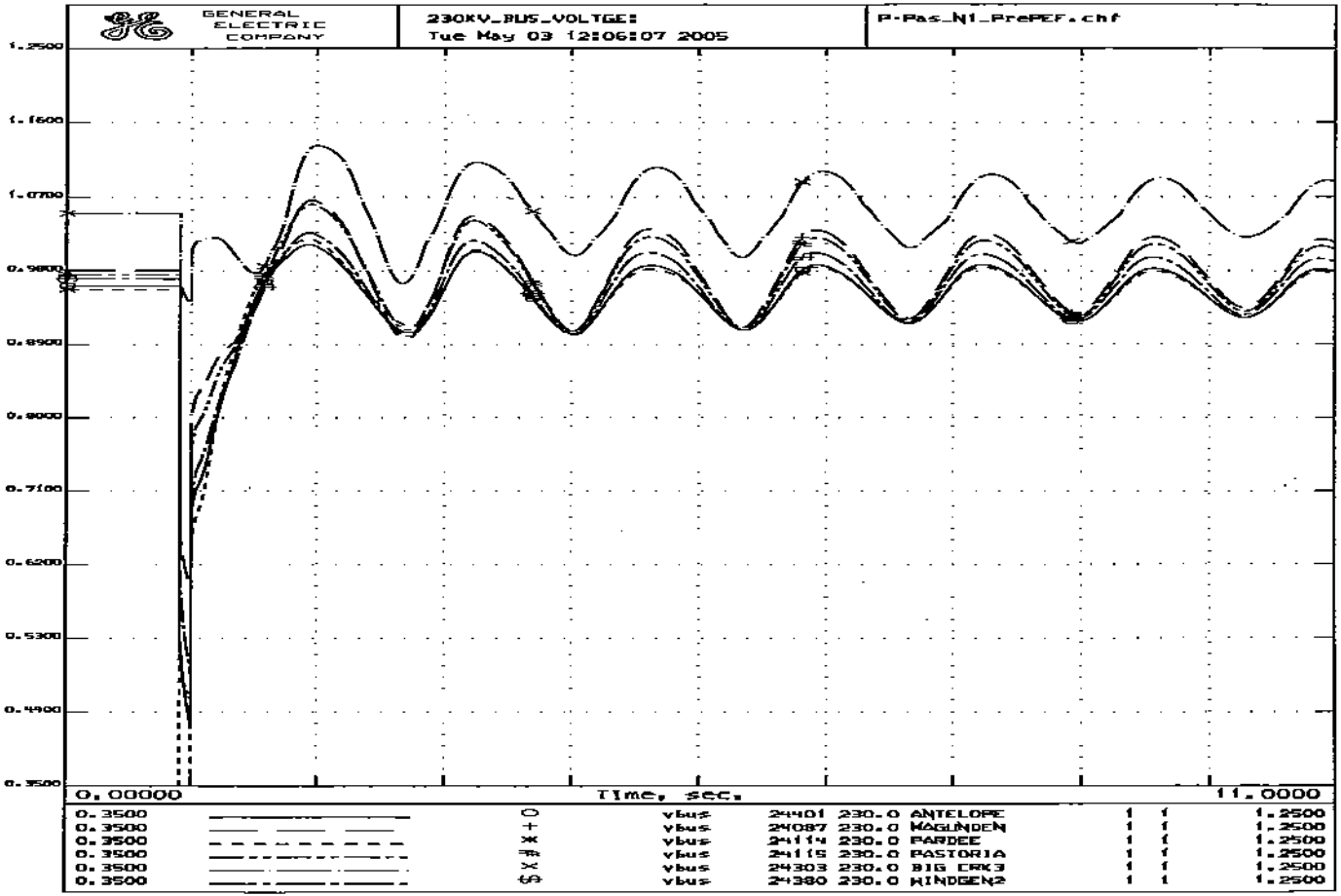
GENERAL ELECTRIC COMPANY
230KV_BUS_VOLTGE:
Tue May 03 12:06:07 2005
P-Pas_N1_PrePEF.chf
1.2500
1.1600
1.0700
0.9800
0.8900
0.8000
0.7100
0.6200
0.5300
0.4400
0.3500
0.00000
Time, sec.
11.0000
0.3500 vbus 24401 230.0 ANTELOPE 1 1 1.2500
0.3500 vbus 24087 230.0 MAGUNDEN 1 1 1.2500
0.3500 vbus 24114 230.0 PARDEE 1 1 1.2500
0.3500 vbus 24115 230.0 PASTORIA 1 1 1.2500
0.3500 vbus 24303 230.0 BIG CRK3 1 1 1.2500
0.3500 vbus 24380 230.0 WINDGEN2 1 1 1.2500

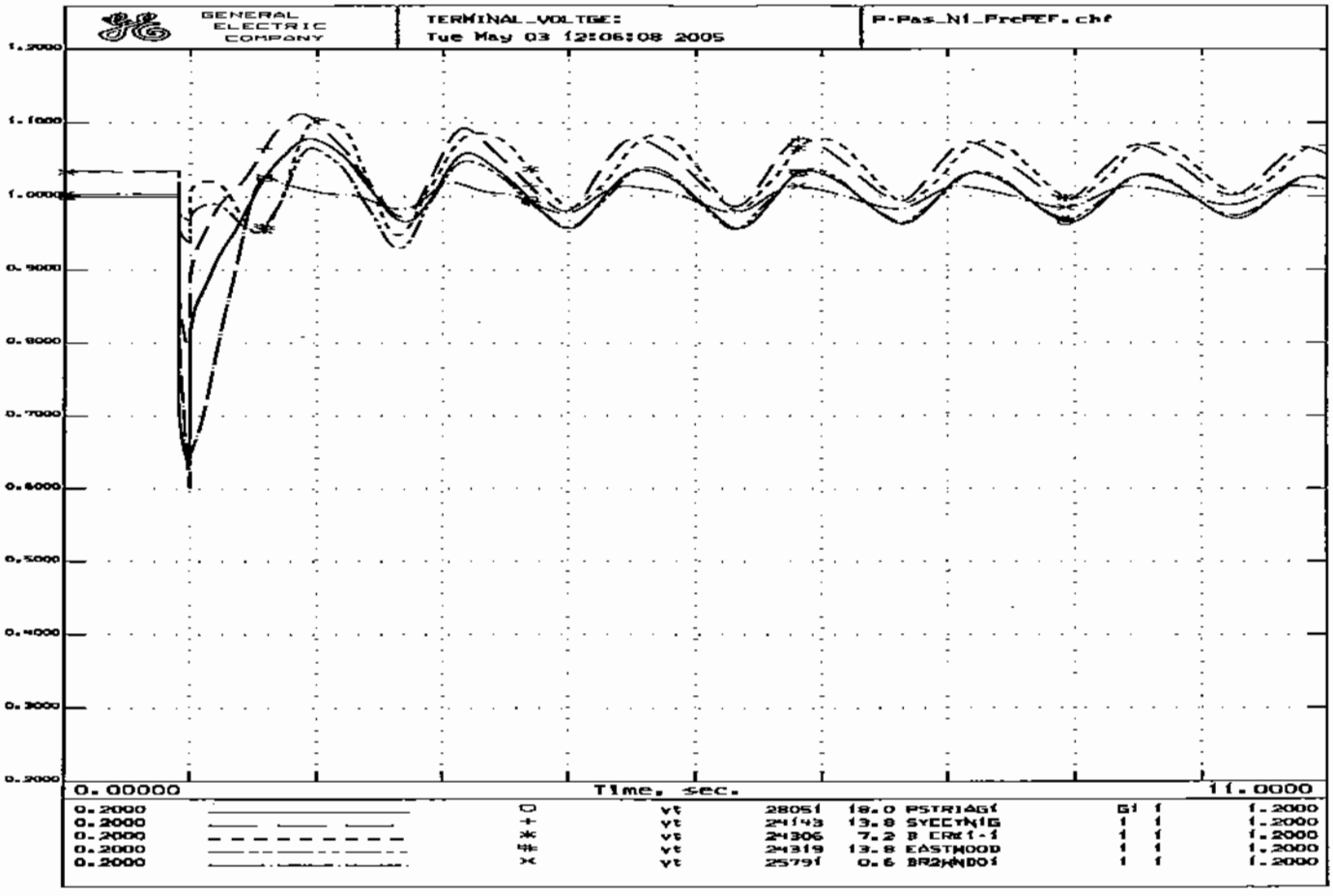
GENERAL ELECTRIC COMPANY
TERMINAL_VOLTGE:
Tue May 03 12:06:08 2005
P-Pas_N1_PrePEF.chf
1.2000
1.1000
1.0000
0.9000
0.8000
0.7000
0.6000
0.5000
0.4000
0.3000
0.2000
0.00000
Time, sec.
11.0000
0.2000 □ vt 28051 18.0 PSTRIAG1 G1 1 1.2000
0.2000 + vt 24143 13.8 SYCCTNIG 1 1 1.2000
0.2000 ✱ vt 24306 7.2 B CRK1-1 1 1 1.2000
0.2000 ✱ vt 24319 13.8 EASTWOOD 1 1 1.2000
0.2000 × vt 25791 0.6 BR2WNDO1 1 1 1.2000

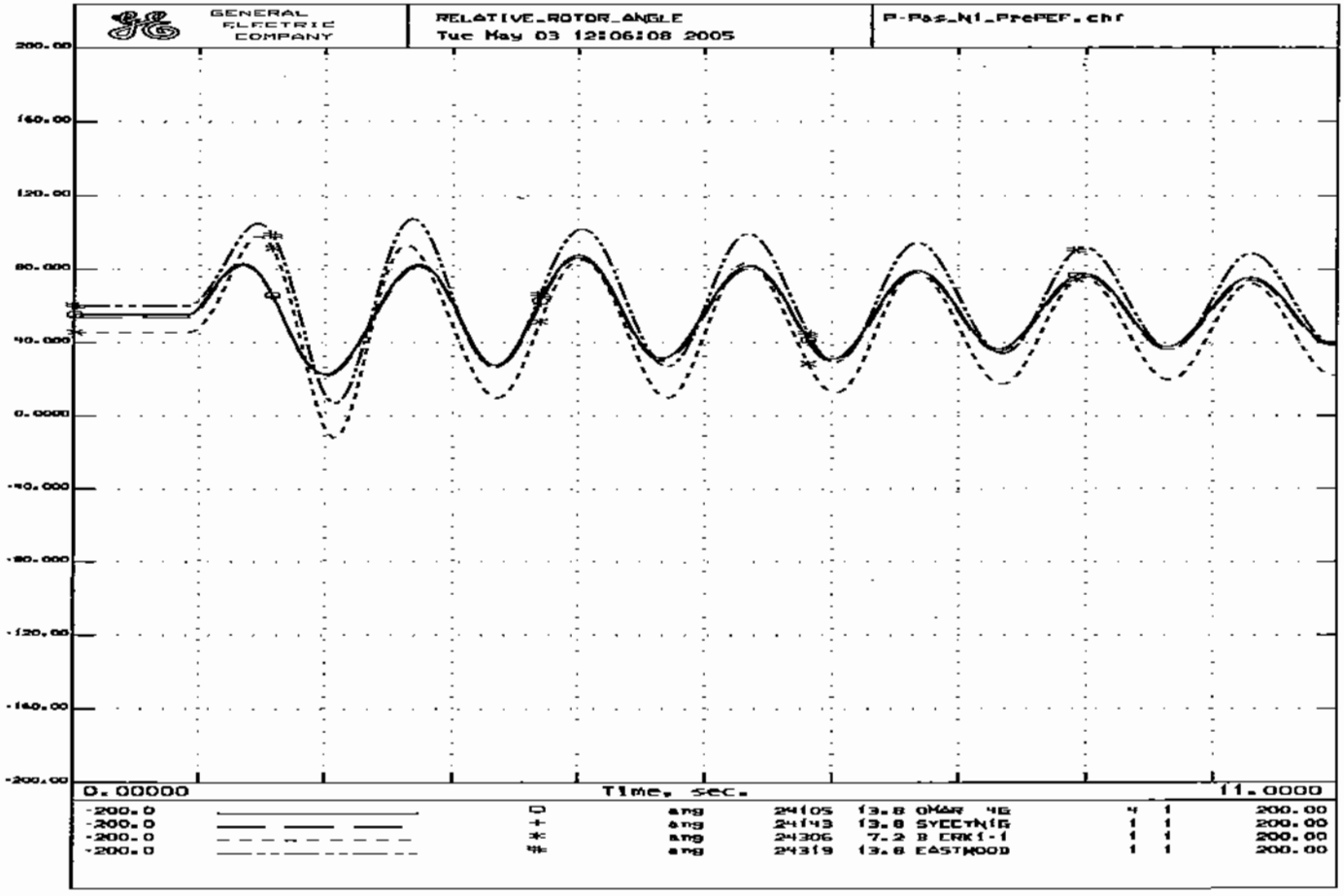
GENERAL ELECTRIC COMPANY
RELATIVE_ROTOR_ANGLE
Tue May 03 12:06:08 2005
P-Pas_N1_PrePEF.chf
200.00
160.00
120.00
80.000
40.000
0.0000
-40.000
-80.000
-120.00
-140.00
-200.00
0.00000
Time, sec.
11.0000
-200.0 □ ang 24105 13.8 OMAR 4G 4 1 200.00
-200.0 + ang 24143 13.8 SYCCTNIG 1 1 200.00
-200.0 * ang 24306 7.2 B ERK1-1 1 1 200.00
-200.0 # ang 24319 13.8 EASTWOOD 1 1 200.00

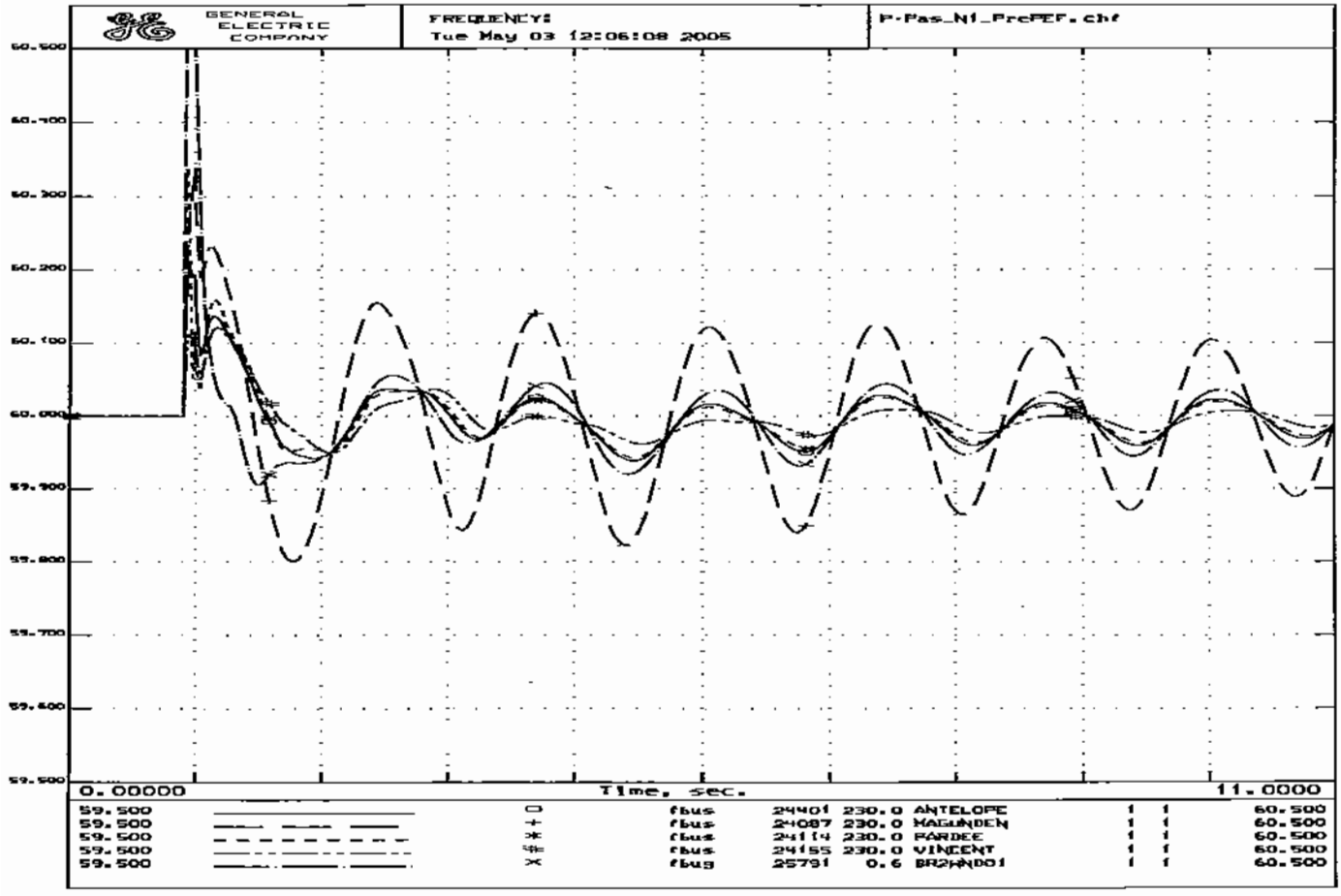
GENERAL ELECTRIC COMPANY
FREQUENCY:
Tue May 03 12:06:08 2005
P-Pas_N1_PrcPEF.chf
60.500
60.400
60.300
60.200
60.100
60.000
59.900
59.800
59.700
59.600
59.500
0.00000
Time, sec.
11.0000
59.500 □ fbus 24401 230.0 ANTELOPE 1 1 60.500
59.500 + fbus 24087 230.0 MAGUNDEN 1 1 60.500
59.500 * fbus 24114 230.0 PARDEE 1 1 60.500
59.500 * fbus 24155 230.0 VINCENT 1 1 60.500
59.500 × fbus 25791 0.6 BRANDO1 1 1 60.500

```
PrePEF_High_SOM.sav
PrePEF.dyd
TITLE
Calpine Pastoria Add Stability Study: Loss of One 230-KV Line
6-CYCLE 3-Phase Fault at Pardee 230kV Bus
N-1 OUTAGE: Pardee-Pastoria-Warne 230kV Line
SYSTEM STABILITY CASE - P-W-Pas_N1_PrePEF.swt
PrePEF_High_SOM.sav + PrePEF.dyd + P-W-Par_N1_PrePEF.swt
RUN 10.0
CC
CC   ***CALPINE PASTORIA ADD DYNAMIC STABILITY ASSESSMENT***
CC   APPLY A 3-PHASE FAULT ON THE PARDEE 230-KV BUS
FB   0.0 "PARDEE   " 230
CC
CC   CLEAR FAULT IN 6 CYCLES
CFB  6.0 "PARDEE   " 230
CC
CC   REMOVE PARDEE-PASTORIA-WARNE 230-KV LINE
TG   6.0 "WARNE1   " 13.80 "1 "
TG   6.0 "WARNE2   " 13.80 "1 "
DL   6.0 "PARDEE   " 230. "WARNETAP" 230. "1 "
DL   6.0 "WARNE    " 230. "WARNETAP" 230. "1 "
DL   6.0 "PASTORIA" 230. "WARNETAP" 230. "1 "
```

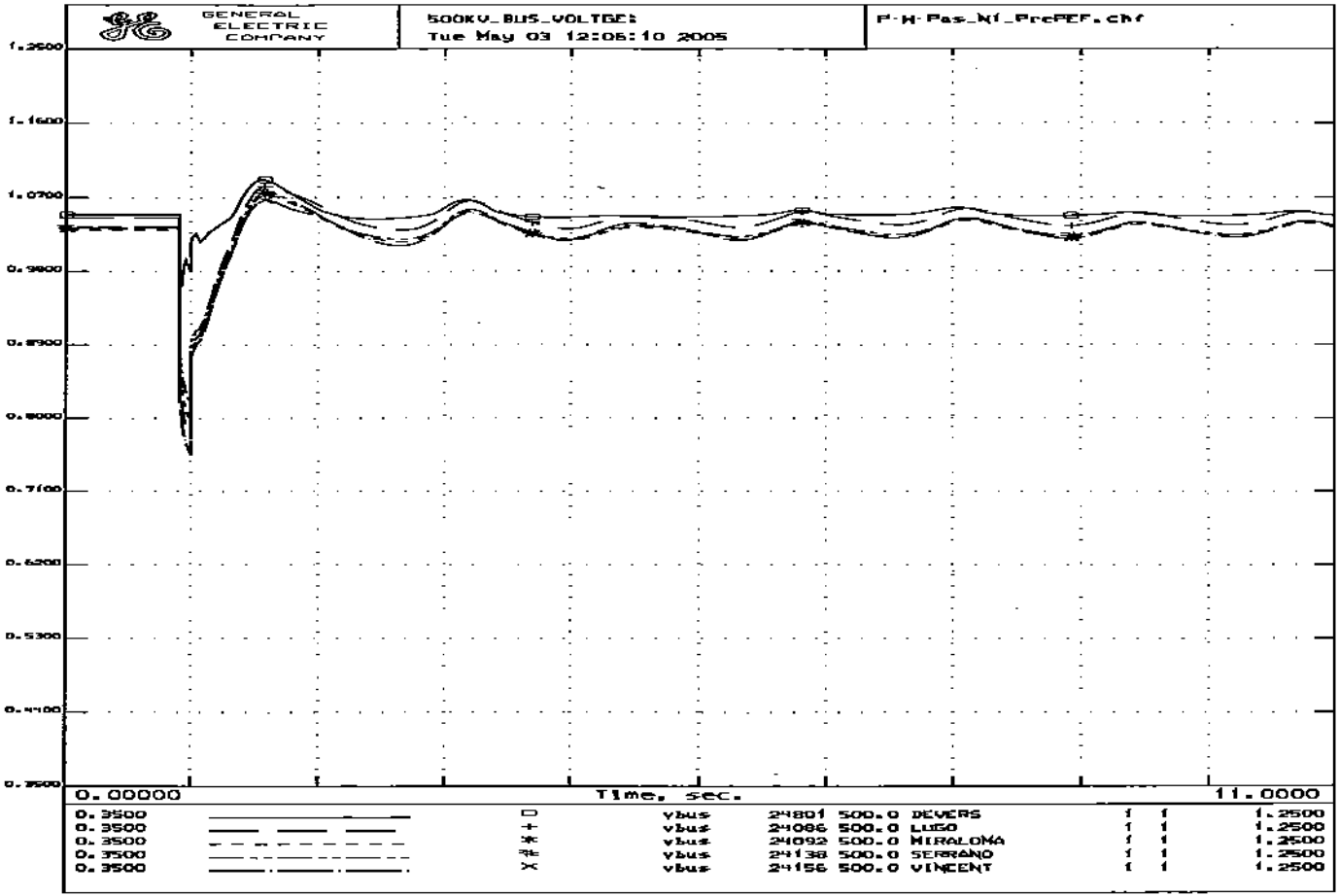
GENERAL ELECTRIC COMPANY
500KV_BUS_VOLTGE:
Tue May 03 12:06:10 2005
P-W-Pas_Wf_PrePEF.chf
1.2500
1.1600
1.0700
0.9800
0.8900
0.8000
0.7100
0.6200
0.5300
0.4400
0.3500
0.00000
Time, sec.
11.0000
0.3500 □ vbus 24801 500.0 DEVERS 1 1 1.2500
0.3500 + vbus 24086 500.0 LUGO 1 1 1.2500
0.3500 * vbus 24092 500.0 MIRALOMA 1 1 1.2500
0.3500 # vbus 24138 500.0 SERRANO 1 1 1.2500
0.3500 X vbus 24156 500.0 VINCENT 1 1 1.2500

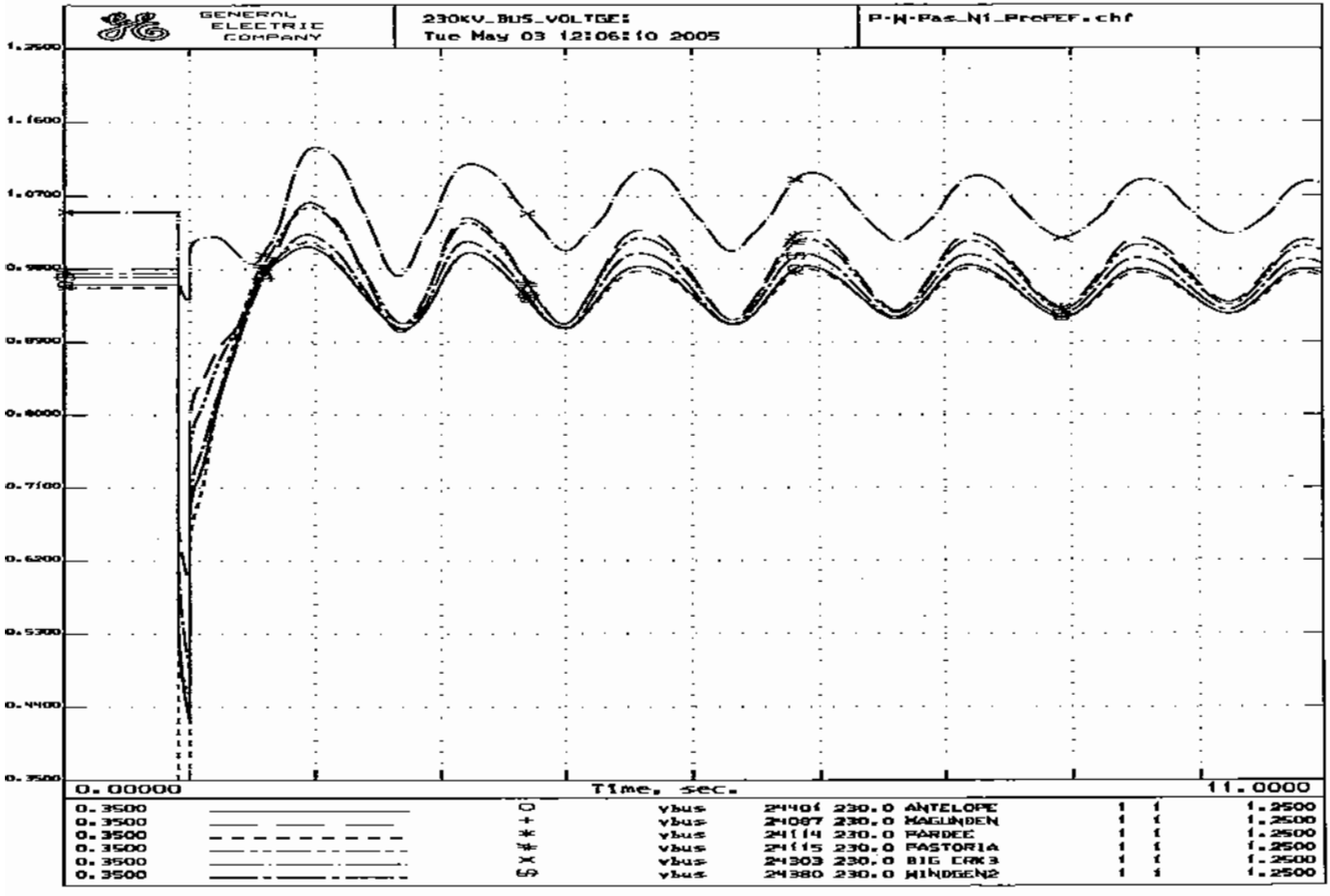
GENERAL ELECTRIC COMPANY
230KV_BUS_VOLTGE:
Tue May 03 12:06:10 2005
P-W-Pas_N1_PrePEF.chf
1.2500
1.1600
1.0700
0.9800
0.8900
0.8000
0.7100
0.6200
0.5300
0.4400
0.3500
0.00000
Time, sec.
11.0000
0.3500 O vbus 24401 230.0 ANTELOPE 1 1 1.2500
0.3500 + vbus 24087 230.0 MAGUNDEN 1 1 1.2500
0.3500 * vbus 24114 230.0 PARDEE 1 1 1.2500
0.3500 # vbus 24115 230.0 PASTORIA 1 1 1.2500
0.3500 X vbus 24303 230.0 BIG CRK3 1 1 1.2500
0.3500 G vbus 24380 230.0 WINDGEN2 1 1 1.2500

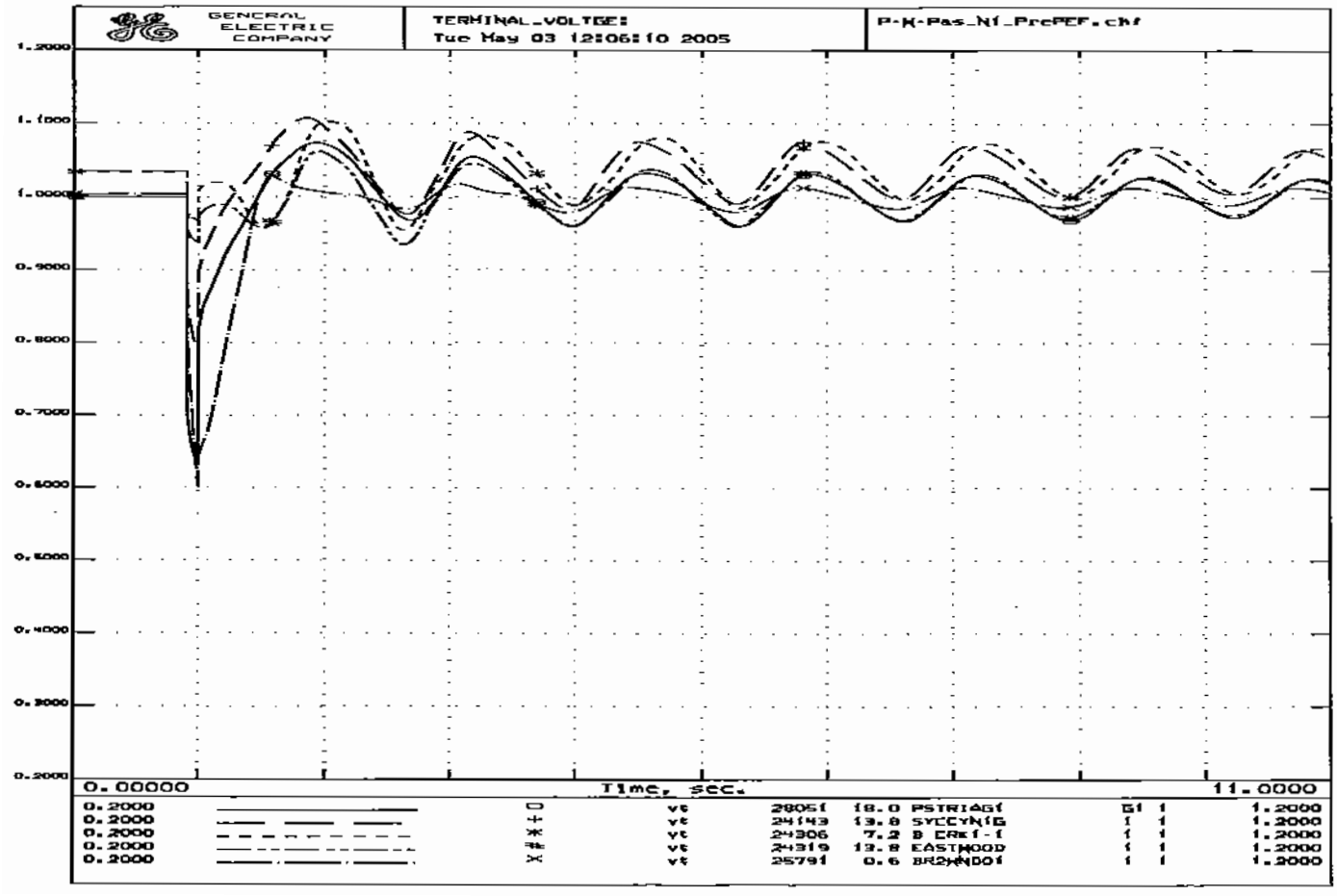
GENERAL ELECTRIC COMPANY
TERMINAL_VOLTGE:
Tue May 03 12:06:10 2005
P-W-Pas_Nf_PrcPEF.chf
1.2000
1.1000
1.0000
0.9000
0.8000
0.7000
0.6000
0.5000
0.4000
0.3000
0.2000
0.00000
Time, sec.
11.0000
0.2000 □ vt 28051 18.0 PSTRIAGI G1 1 1.2000
0.2000 + vt 24143 13.8 SYCCYNIG 1 1 1.2000
0.2000 * vt 24306 7.2 B ERK1-1 1 1 1.2000
0.2000 # vt 24319 13.8 EASTWOOD 1 1 1.2000
0.2000 X vt 25791 0.6 BR2WNDOI 1 1 1.2000

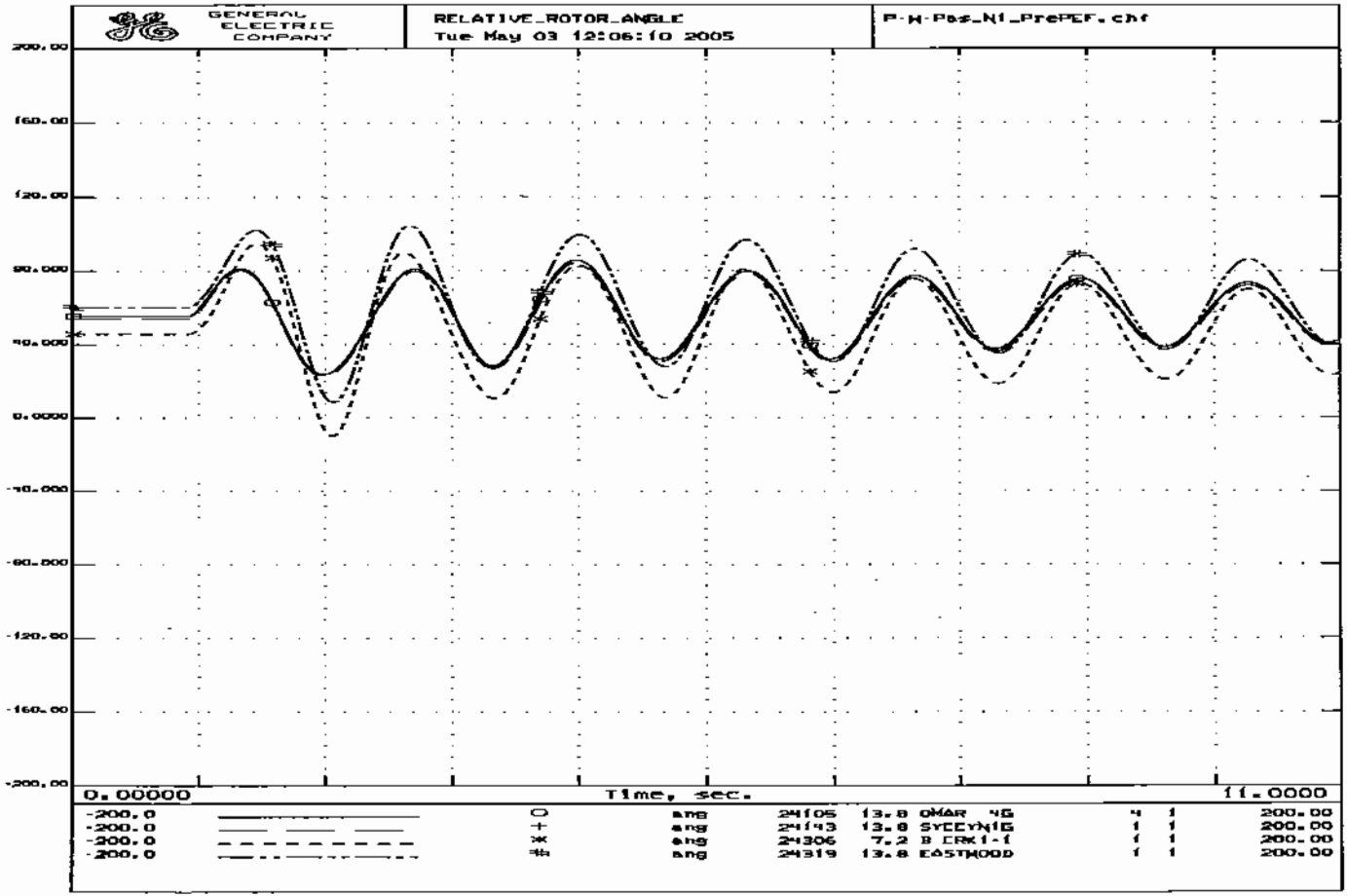
GENERAL ELECTRIC COMPANY
RELATIVE_ROTOR_ANGLE
Tue May 03 12:06:10 2005
P-W-Pos_N1_PrePEF.chf
200.00
160.00
120.00
80.000
40.000
0.0000
-40.000
-80.000
-120.00
-160.00
-200.00
0.00000
Time, sec.
11.0000
-200.0 O ang 24105 13.8 OMAR 4G 4 1 200.00
-200.0 + ang 24143 13.8 SYCEYN1G 1 1 200.00
-200.0 * ang 24306 7.2 B ERK1-1 1 1 200.00
-200.0 # ang 24319 13.8 EASTWOOD 1 1 200.00

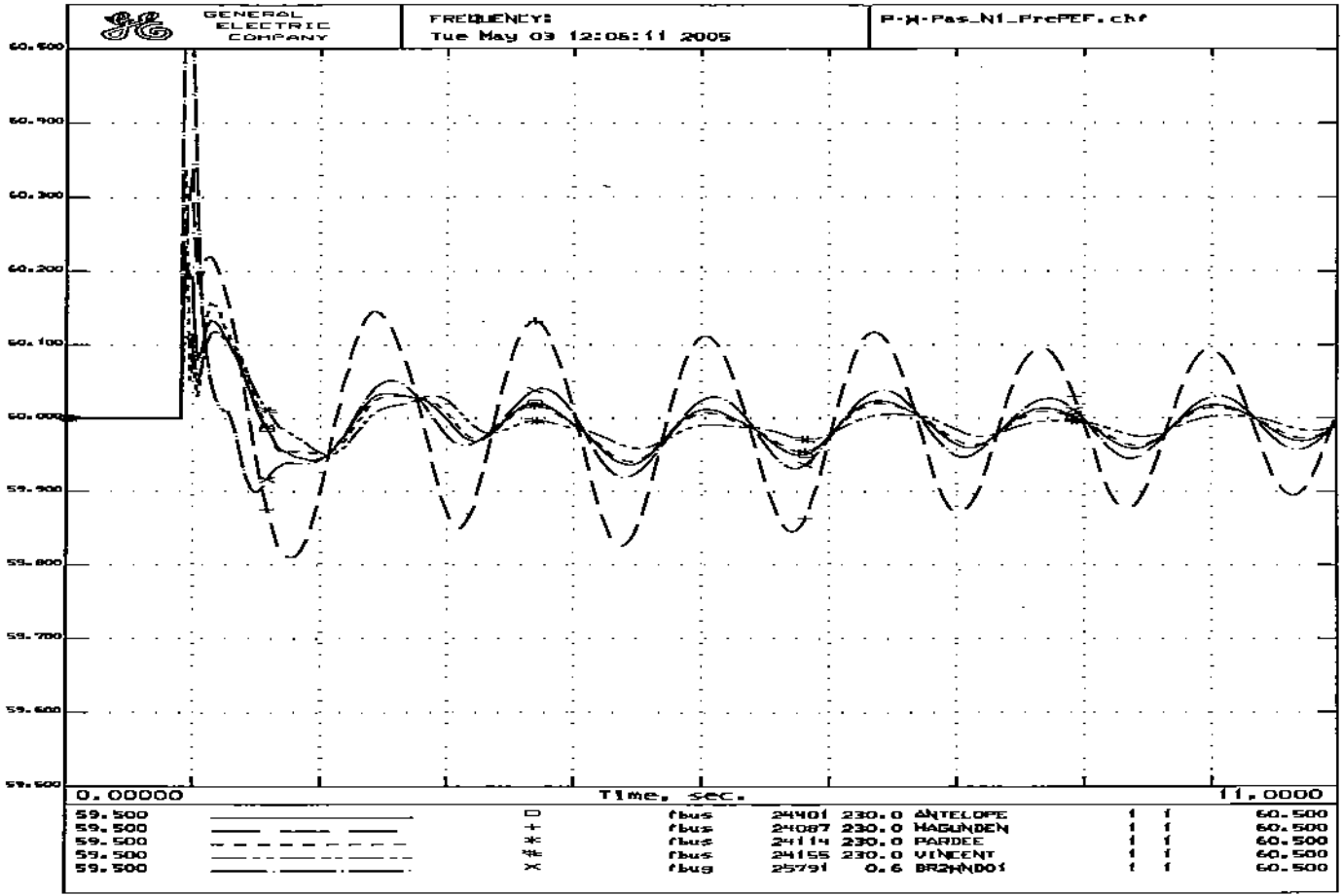
GENERAL ELECTRIC COMPANY
FREQUENCY:
Tue May 03 12:06:11 2005
P-W-Pas_N1_PrePEF.chf
60.500
60.400
60.300
60.200
60.100
60.000
59.900
59.800
59.700
59.600
59.500
0.00000
Time, sec.
11.0000
59.500 □ fbus 24401 230.0 ANTELOPE 1 1 60.500
59.500 + fbus 24087 230.0 MAGUNDEN 1 1 60.500
59.500 * fbus 24114 230.0 PARDEE 1 1 60.500
59.500 # fbus 24155 230.0 VINCENT 1 1 60.500
59.500 X fbus 25791 0.6 BRANDO1 1 1 60.500

```
PrePEF_High_SOM.sav
PrePEF.dyd
TITLE
Calpine Pastoria Add Stability Study: Loss of One 230-KV Line
6-CYCLE 3-Phase Fault at Pastoria 230kV Bus
N-1 OUTAGE: Bailey-Pastoria 230kV Line
SYSTEM STABILITY CASE - Pas-B_N1_PrePEF.swt
PrePEF_High_SOM.sav + PrePEF.dyd + Pas-B_N1_PrePEF.swt
RUN 10.0
CC
CC   ***CALPINE PASTORIA ADD DYNAMIC STABILITY ASSESSMENT***
CC   APPLY A 3-PHASE FAULT ON THE PASTORIA 230-KV BUS
FB   0.0 "PASTORIA" 230
CC
CC   CLEAR FAULT IN 6 CYCLES
CFB  6.0 "PASTORIA" 230
CC
CC   REMOVE BAILEY-PASTORIA 230-KV LINE
DL   6.0 "BAILEY  " 230. "PASTORIA" 230. "1 "
```

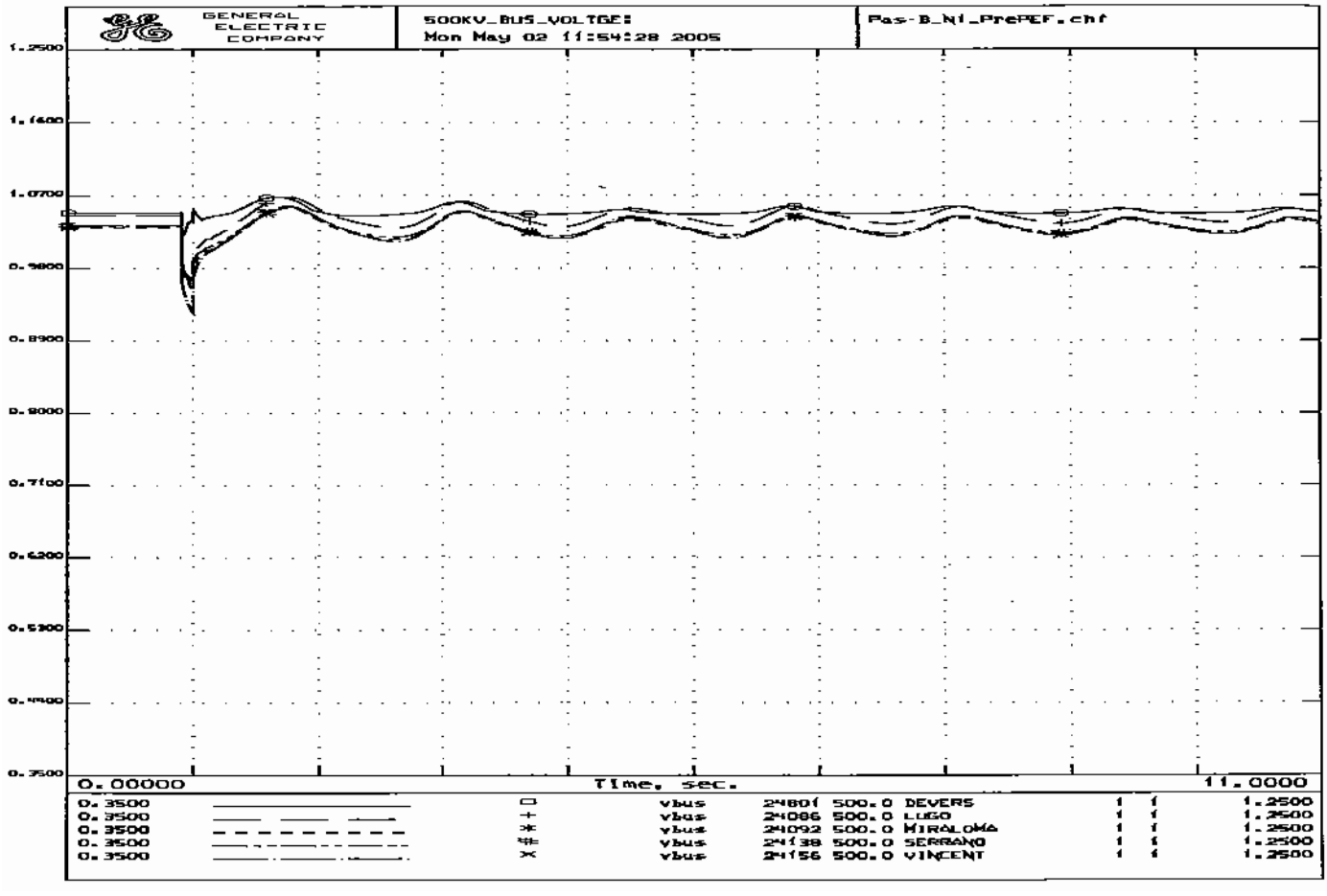
GENERAL ELECTRIC COMPANY
500KV_BUS_VOLTGE:
Mon May 02 11:54:28 2005
Pas-B_N1_PrePEF.chf
1.2500
1.1400
1.0700
0.9800
0.8900
0.8000
0.7100
0.6200
0.5300
0.4400
0.3500
0.00000
Time, sec.
11.0000
0.3500 □ vbus 24801 500.0 DEVERS 1 1 1.2500
0.3500 + vbus 24086 500.0 LUGO 1 1 1.2500
0.3500 * vbus 24092 500.0 MIRALOMA 1 1 1.2500
0.3500 # vbus 24138 500.0 SERRANO 1 1 1.2500
0.3500 × vbus 24156 500.0 VINCENT 1 1 1.2500

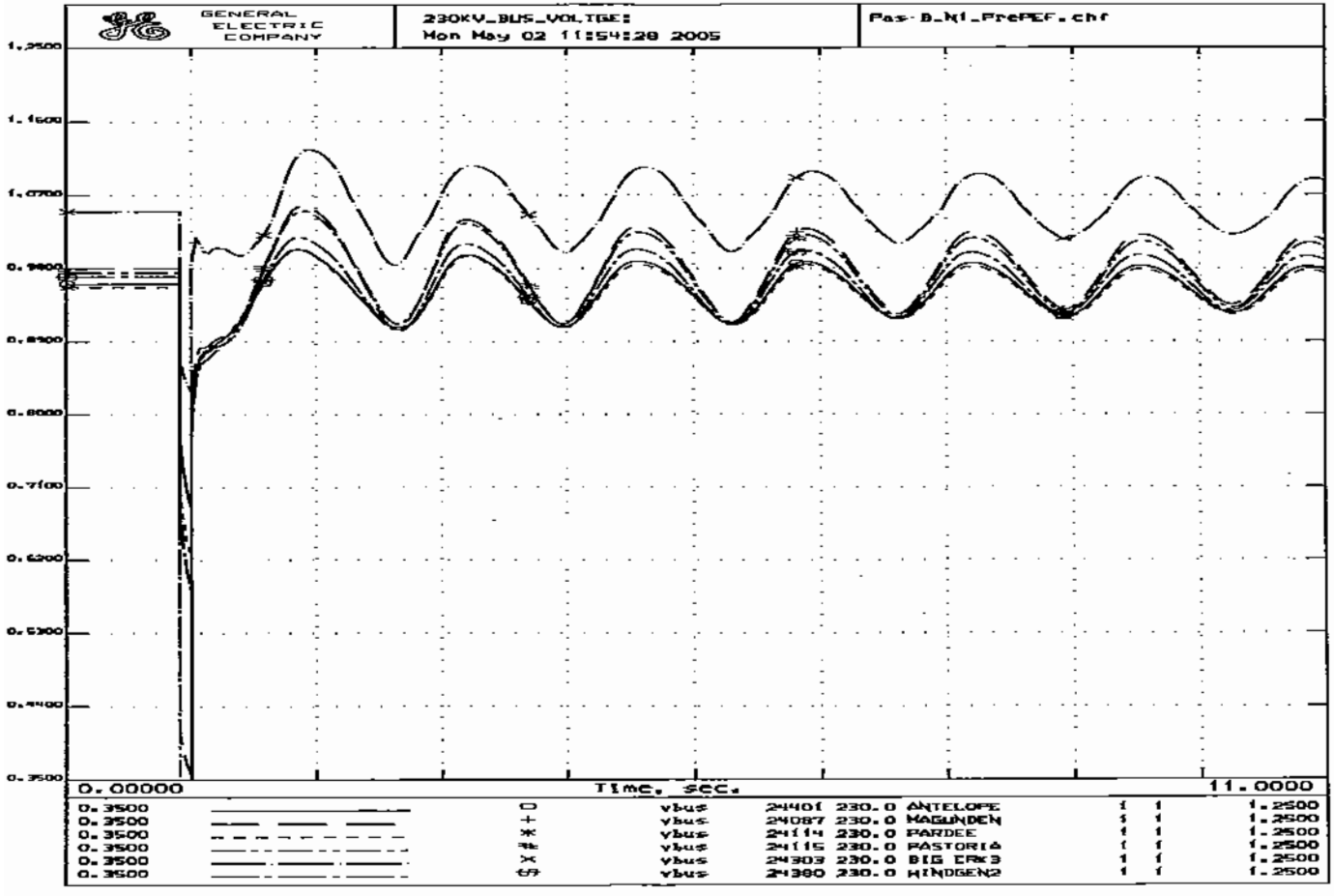
GENERAL ELECTRIC COMPANY
230KV_BUS_VOLTAGE:
Mon May 02 11:54:28 2005
Pas-B_N1_PrePEF.chf
1.2500
1.1600
1.0700
0.9800
0.8900
0.8000
0.7100
0.6200
0.5300
0.4400
0.3500
0.00000
TIME, SECS.
11.0000
0.3500 vbus 24401 230.0 ANTELOPE 1 1 1.2500
0.3500 vbus 24087 230.0 MAGUNDEN 1 1 1.2500
0.3500 vbus 24114 230.0 PARDEE 1 1 1.2500
0.3500 vbus 24115 230.0 PASTORIA 1 1 1.2500
0.3500 vbus 24303 230.0 BIG ERK3 1 1 1.2500
0.3500 vbus 24300 230.0 WINDGEN2 1 1 1.2500

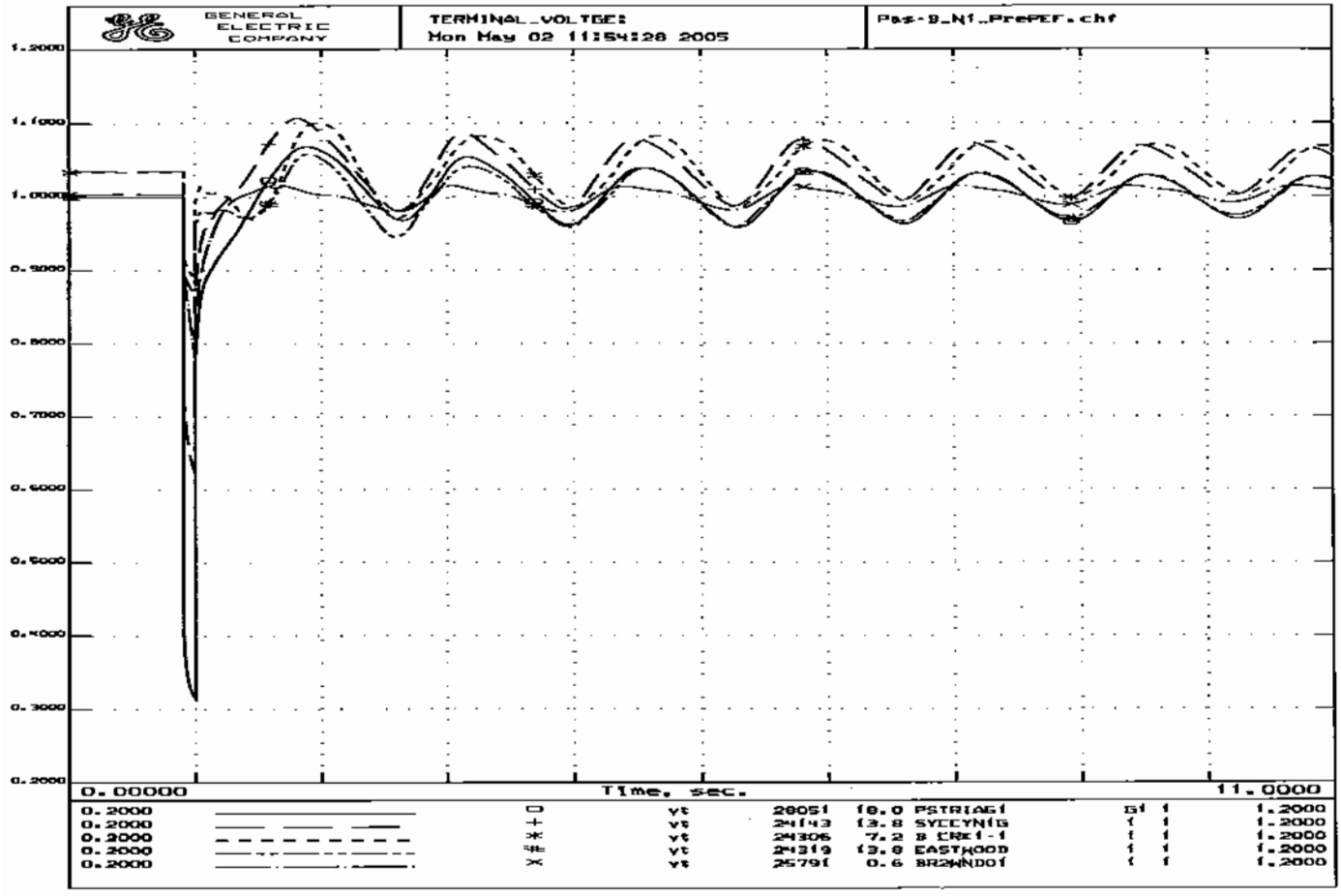
GENERAL ELECTRIC COMPANY
TERMINAL_VOLTGE:
Mon May 02 11:54:28 2005
Pas-B_N1_PrePEF.chf
1.2000
1.1000
1.0000
0.9000
0.8000
0.7000
0.6000
0.5000
0.4000
0.3000
0.2000
0.00000
Time, sec.
11.0000
0.2000 □ vt 28051 18.0 PSTRIAG1 G1 1 1.2000
0.2000 + vt 24143 13.8 SYCCYNIG 1 1 1.2000
0.2000 * vt 24306 7.2 B CRK1-1 1 1 1.2000
0.2000 ≠ vt 24319 13.8 EASTWOOD 1 1 1.2000
0.2000 × vt 25791 0.6 BRAWNDO1 1 1 1.2000

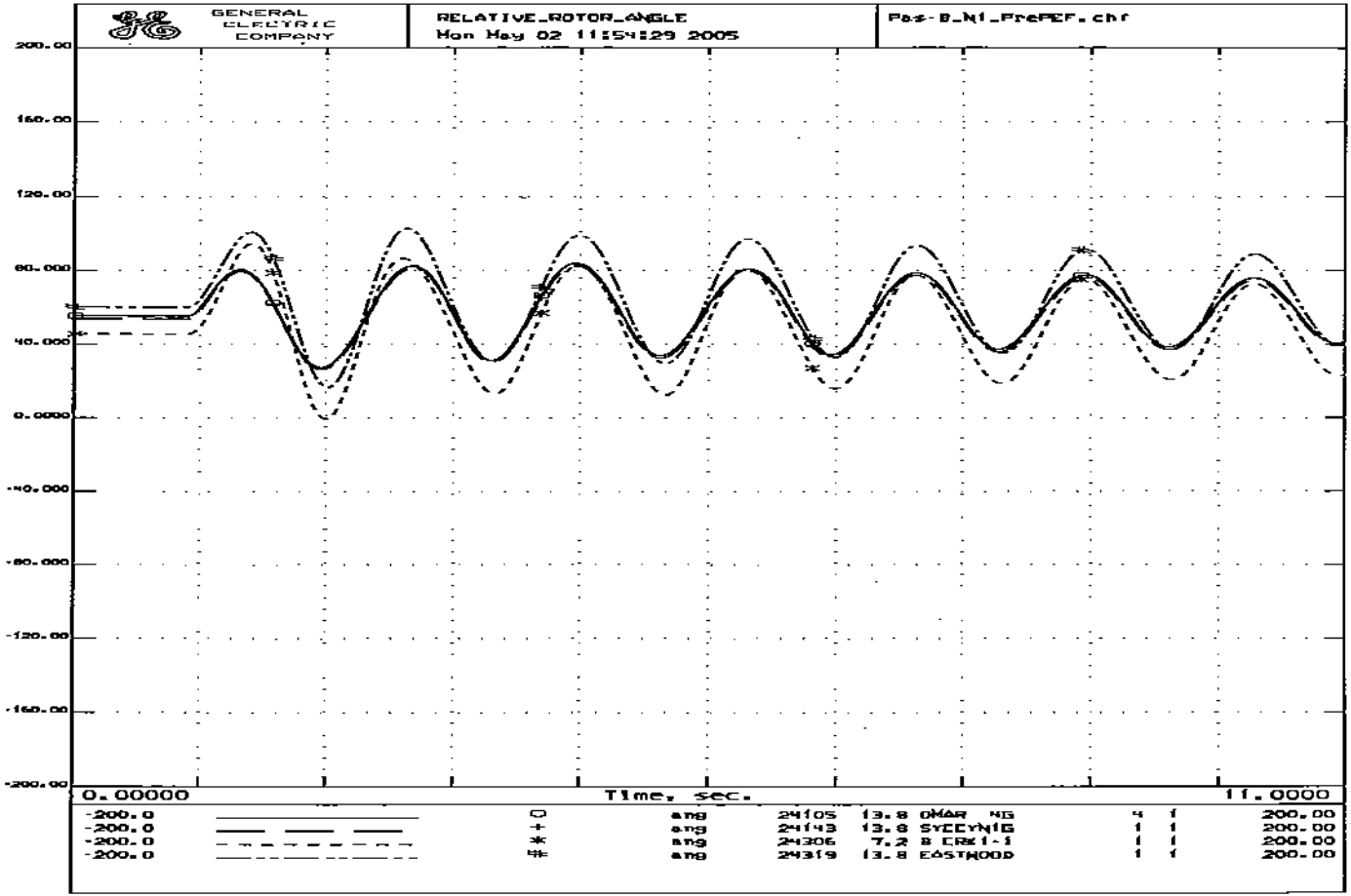
GENERAL ELECTRIC COMPANY
RELATIVE_ROTOR_ANGLE
Mon May 02 11:54:29 2005
Pas-B_N1_PrePEF.chf
200.00
160.00
120.00
80.000
40.000
0.0000
-40.000
-80.000
-120.00
-160.00
-200.00
0.00000
Time, sec.
11.0000
-200.0 ang 24105 13.8 OMAR NG 4 1 200.00
-200.0 ang 24143 13.8 SYCCYNIG 1 1 200.00
-200.0 ang 24306 7.2 B ERE1-1 1 1 200.00
-200.0 ang 24319 13.8 EASTWOOD 1 1 200.00

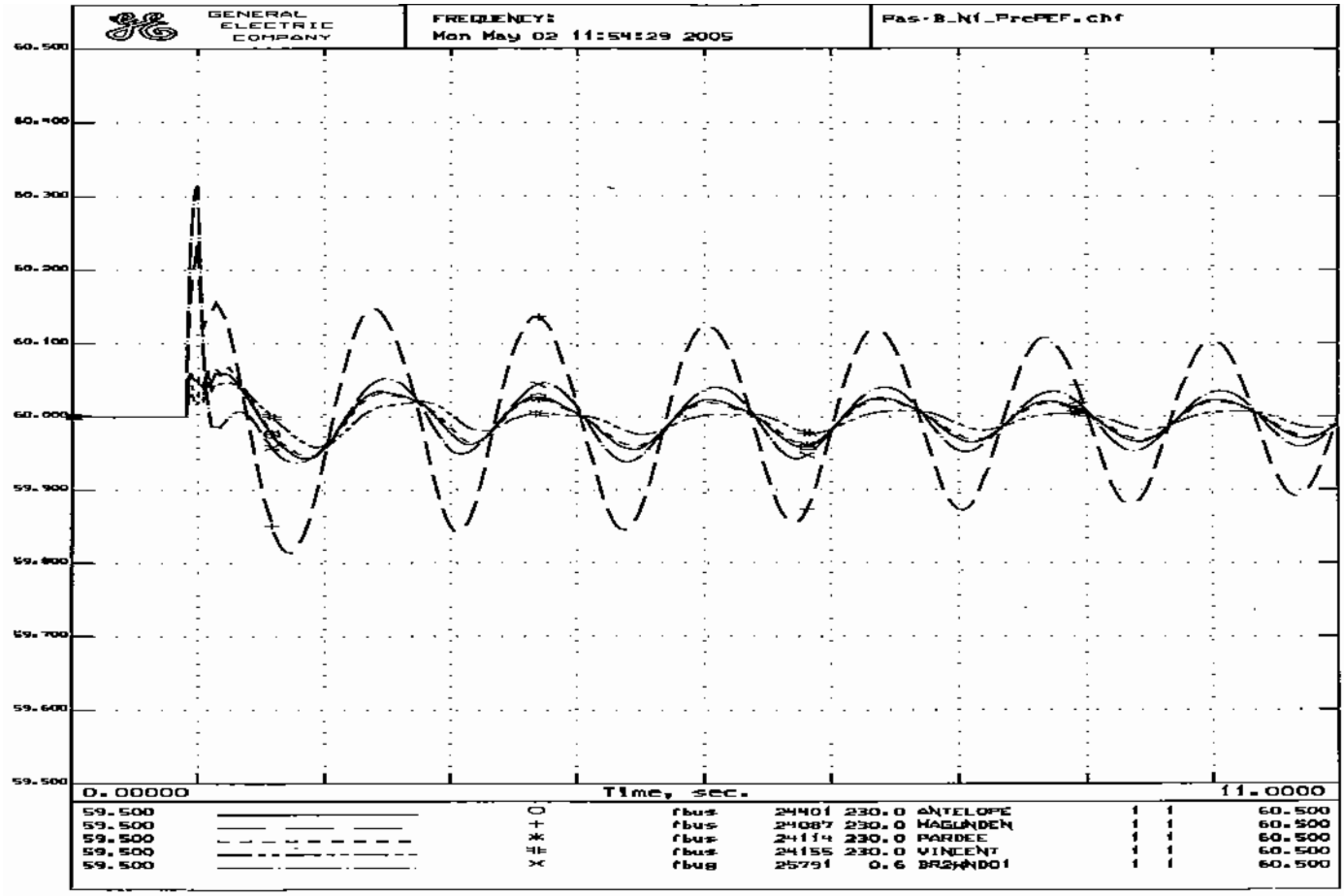
GENERAL ELECTRIC COMPANY
FREQUENCY:
Mon May 02 11:54:29 2005
Pas-B_N1_PrePEF.chf
60.500
60.400
60.300
60.200
60.100
60.000
59.900
59.800
59.700
59.600
59.500
0.00000
Time, sec.
11.0000
59.500 ○ fbus 24401 230.0 ANTELOPE 1 1 60.500
59.500 + fbus 24087 230.0 HAGUNDEN 1 1 60.500
59.500 * fbus 24114 230.0 PARDEE 1 1 60.500
59.500 ⊞ fbus 24155 230.0 VINCENT 1 1 60.500
59.500 × fbus 25791 0.6 BR2HNDO1 1 1 60.500

```
PrePEF_High_SOM.sav
PrePEF.dyd
TITLE
Calpine Pastoria Add Stability Study: Loss of One 230-KV Line
6-CYCLE 3-Phase Fault at Pastoria 230kV Bus
N-1 OUTAGE: Magunden-Pastoria No.3 230kV Line
SYSTEM STABILITY CASE - Pas-Ma_N1_PrePEF.swt
PrePEF_High_SOM.sav + PrePEF.dyd + Pas-Ma_N1_PrePEF.swt
RUN 10.0
CC
CC   ***CALPINE PASTORIA ADD DYNAMIC STABILITY ASSESSMENT***
CC   APPLY A 3-PHASE FAULT ON THE PASTORIA 230-KV BUS
FB   0.0 "PASTORIA" 230
CC
CC   CLEAR FAULT IN 6 CYCLES
CFB  6.0 "PASTORIA" 230
CC
CC   REMOVE MAGUNDEN-ANTELOPE NO.3 230-KV LINE
DL   6.0 "MAGUNDEN" 230. "PASTORIA" 230. "3 "
```

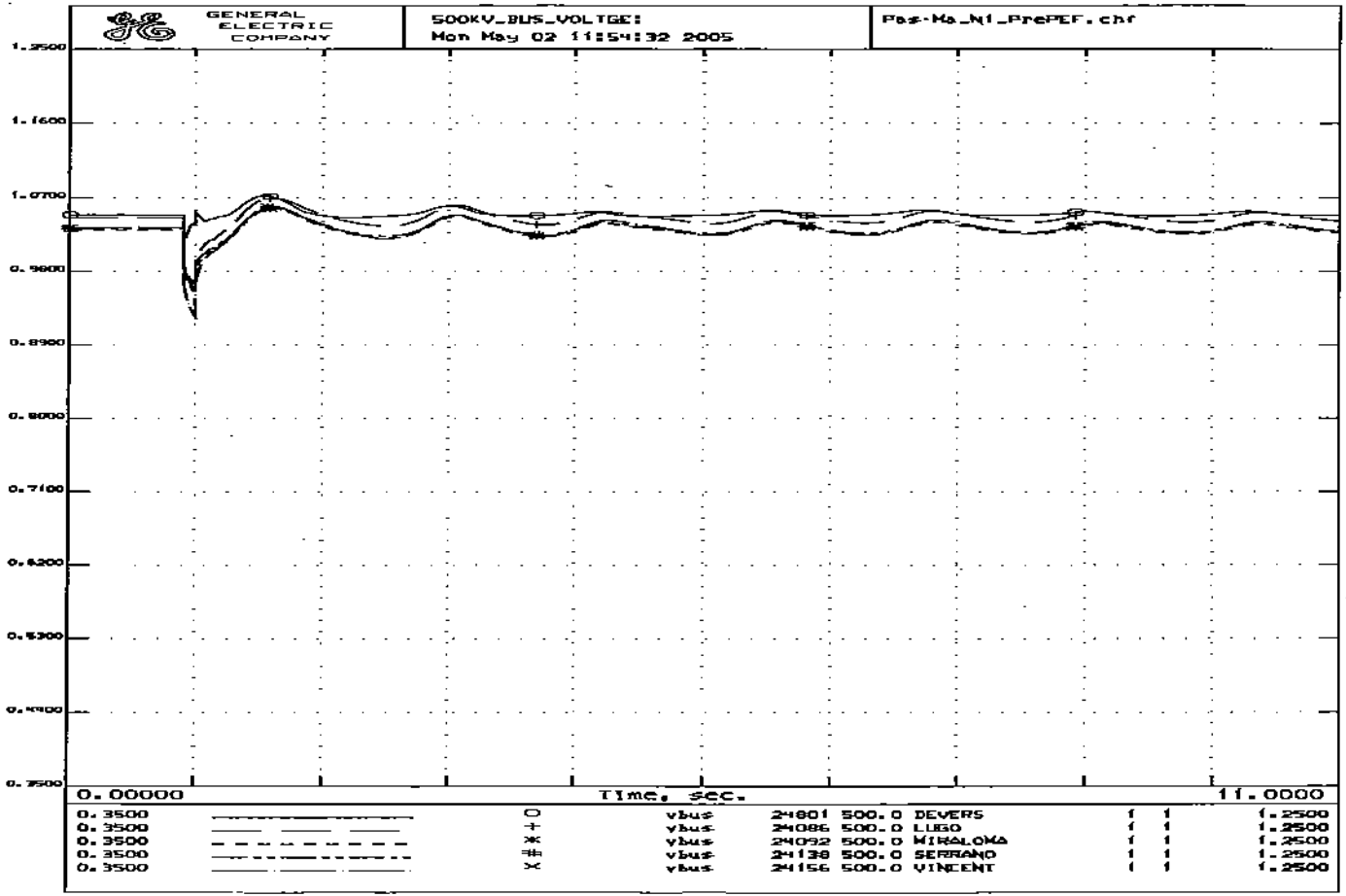
GENERAL ELECTRIC COMPANY
500KV_BUS_VOLTGE:
Mon May 02 11:54:32 2005
Pa#-Ma_N1_PrePEF.chf
1.2500
1.1600
1.0700
0.9800
0.8900
0.8000
0.7100
0.6200
0.5300
0.4400
0.3500
0.00000
Time, sec.
11.0000
0.3500 O vbus 24801 500.0 DEVERS 1 1 1.2500
0.3500 + vbus 24086 500.0 LUGO 1 1 1.2500
0.3500 * vbus 24092 500.0 MIRALOMA 1 1 1.2500
0.3500 # vbus 24138 500.0 SERRANO 1 1 1.2500
0.3500 X vbus 24156 500.0 VINCENT 1 1 1.2500

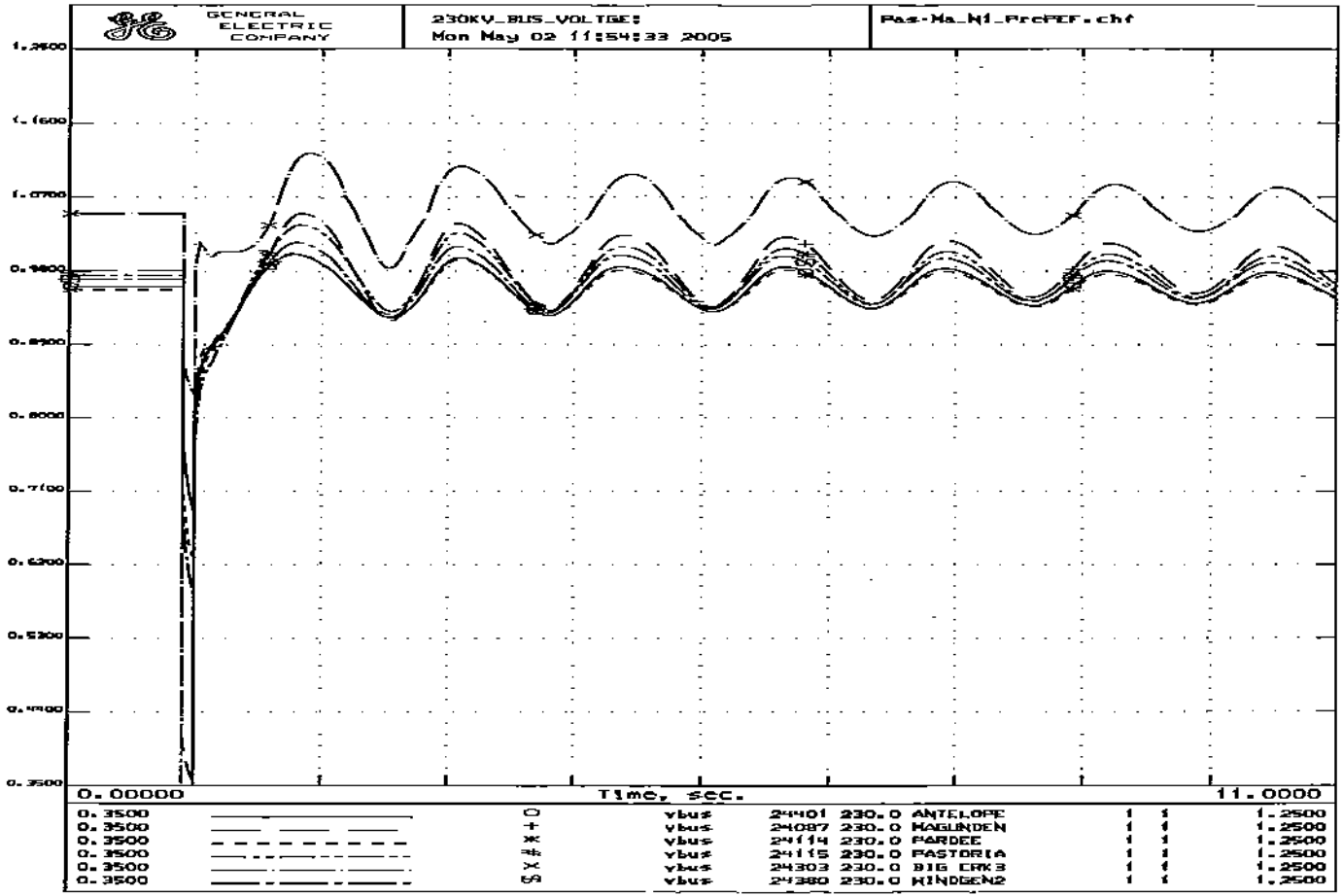
GENERAL ELECTRIC COMPANY
230KV_BUS_VOLTGE:
Mon May 02 11:54:33 2005
Pas-Ma_N1_PrePEF.chf
1.2500
1.1600
1.0700
0.9800
0.8900
0.8000
0.7100
0.6200
0.5300
0.4400
0.3500
0.00000
Time, sec.
11.0000
0.3500 ○ vbus 24401 230.0 ANTELOPE 1 1 1.2500
0.3500 + vbus 24087 230.0 MAGUNDEN 1 1 1.2500
0.3500 * vbus 24114 230.0 PARDEE 1 1 1.2500
0.3500 # vbus 24115 230.0 PASTORIA 1 1 1.2500
0.3500 X vbus 24303 230.0 BIG CRK3 1 1 1.2500
0.3500 GA vbus 24380 230.0 WINDGEN2 1 1 1.2500

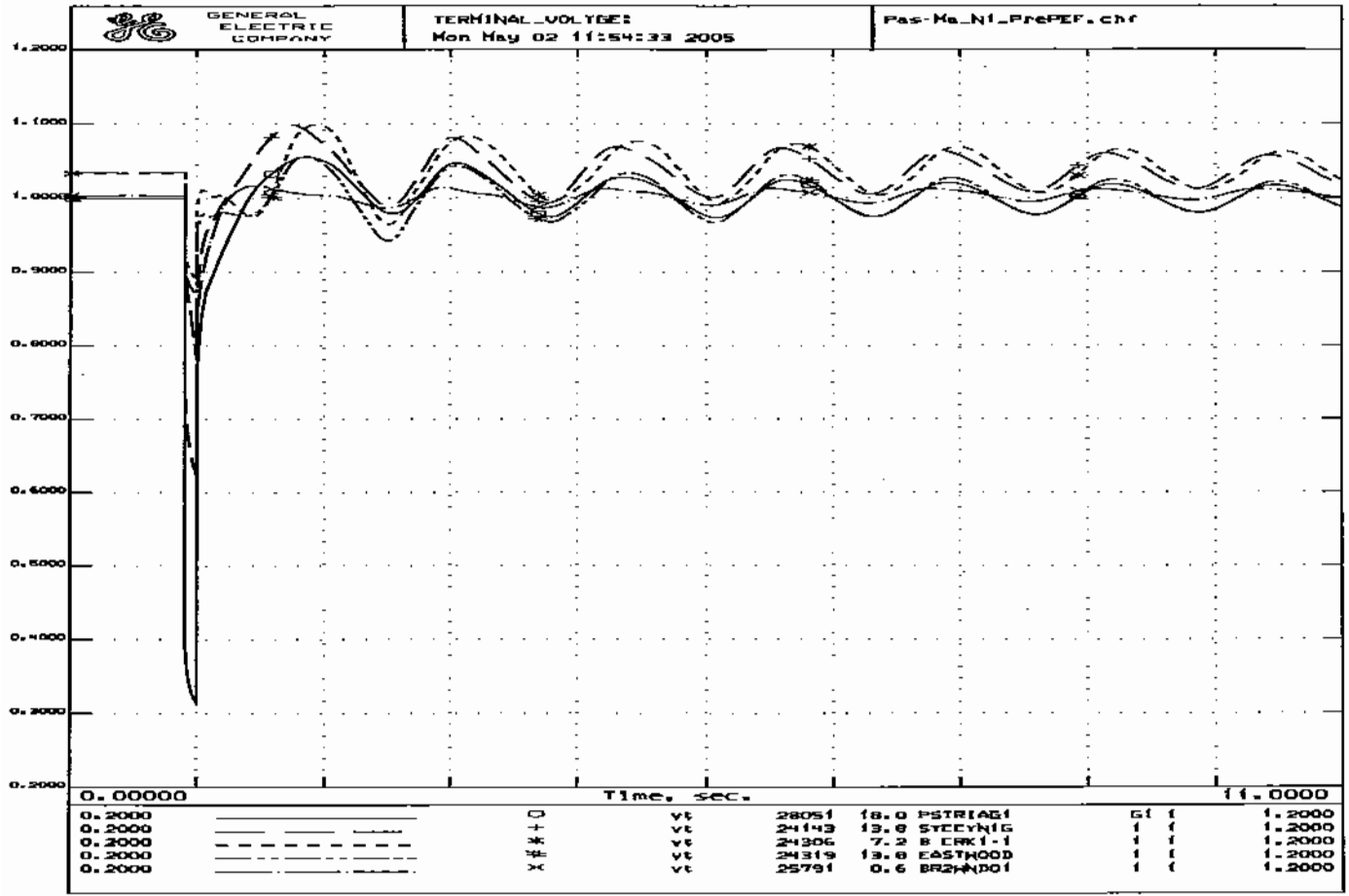
GENERAL ELECTRIC COMPANY
TERMINAL_VOLTGE:
Mon May 02 11:54:33 2005
Pas-Ma_N1_PrePEF.chf
1.2000
1.1000
1.0000
0.9000
0.8000
0.7000
0.6000
0.5000
0.4000
0.3000
0.2000
0.00000
Time, sec.
11.0000
0.2000 ○ vt 28051 18.0 PSTRIAG1 G1 1 1.2000
0.2000 + vt 24143 13.8 SYCCYNIG 1 1 1.2000
0.2000 ✳ vt 24306 7.2 B CRK1-1 1 1 1.2000
0.2000 ✱ vt 24319 13.8 EASTWOOD 1 1 1.2000
0.2000 × vt 25791 0.6 BR2WNDO1 1 1 1.2000

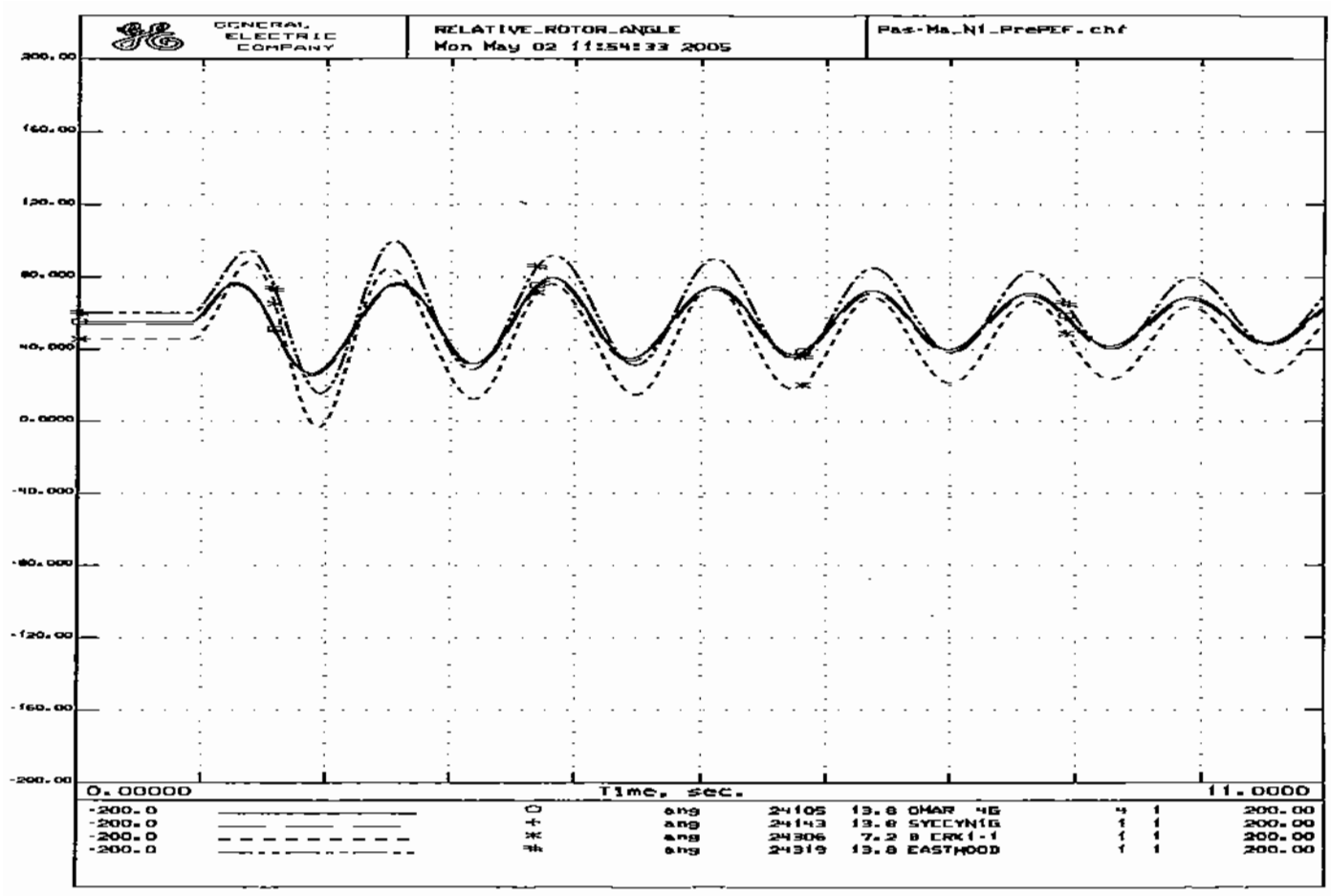
GENERAL ELECTRIC COMPANY
RELATIVE_ROTOR_ANGLE
Mon May 02 11:54:33 2005
Pas-Ma_N1_PrePEF.chf
200.00
160.00
120.00
80.000
40.000
0.0000
-40.000
-80.000
-120.00
-160.00
-200.00
0.00000
Time, sec.
11.0000
-200.0 ang 24105 13.8 OMAR 4G 4 1 200.00
-200.0 ang 24143 13.8 SYCCYN1G 1 1 200.00
-200.0 ang 24306 7.2 B ERK1-1 1 1 200.00
-200.0 ang 24319 13.8 EASTWOOD 1 1 200.00

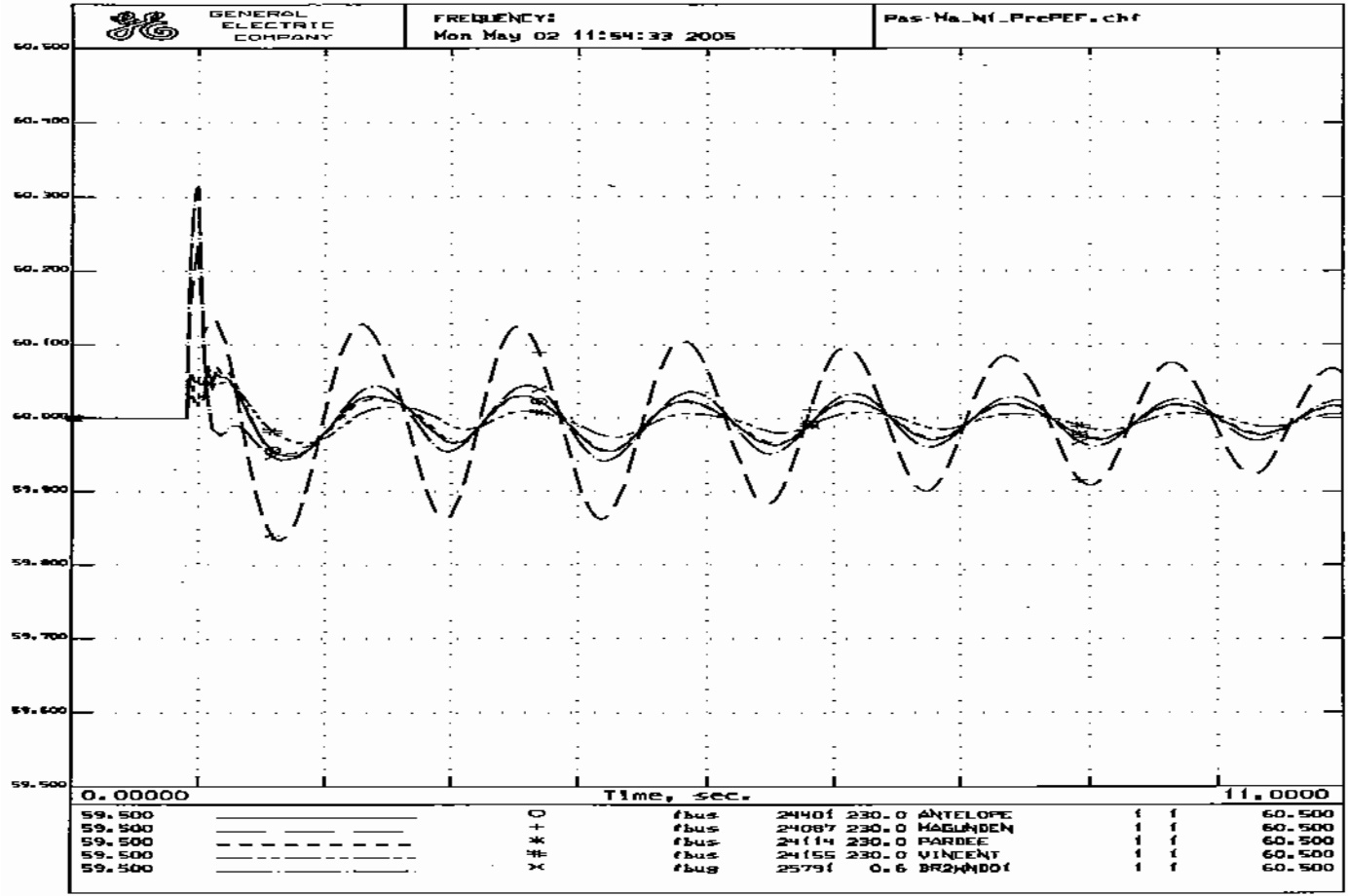
GENERAL ELECTRIC COMPANY
FREQUENCY:
Mon May 02 11:54:33 2005
Pas-Ma_Wf_PrePEF.chf
60.500
60.400
60.300
60.200
60.100
60.000
59.900
59.800
59.700
59.600
59.500
0.00000
Time, sec.
11.0000
59.500 ○ fbus 24401 230.0 ANTELOPE 1 1 60.500
59.500 + fbus 24087 230.0 MAGUNDEN 1 1 60.500
59.500 * fbus 24114 230.0 PARDEE 1 1 60.500
59.500 # fbus 24155 230.0 VINCENT 1 1 60.500
59.500 × fbus 25791 0.6 BR2WNDO1 1 1 60.500

```
PrePEF_High_SOM.sav
PrePEF.dyd
TITLE
Calpine Pastoria Add Stability Study: Loss of One 230-KV Line
6-CYCLE 3-Phase Fault at Pastoria 230kV Bus
N-1 OUTAGE: Pardee-Pastoria 230kV Line
SYSTEM STABILITY CASE - Pas-P_N1_PrePEF.swt
PrePEF_High_SOM.sav + PrePEF.dyd + Pas-P_N1_PrePEF.swt
RUN 10.0
CC
CC   ***CALPINE PASTORIA ADD DYNAMIC STABILITY ASSESSMENT***
CC   APPLY A 3-PHASE FAULT ON THE PASTORIA 230-KV BUS
FB   0.0 "PASTORIA" 230
CC
CC   CLEAR FAULT IN 6 CYCLES
CFB  6.0 "PASTORIA" 230
CC
CC   REMOVE PARDEE-PASTORIA 230-KV LINE
DL   6.0 "PARDEE   " 230. "PASTORIA" 230. "1 "
```

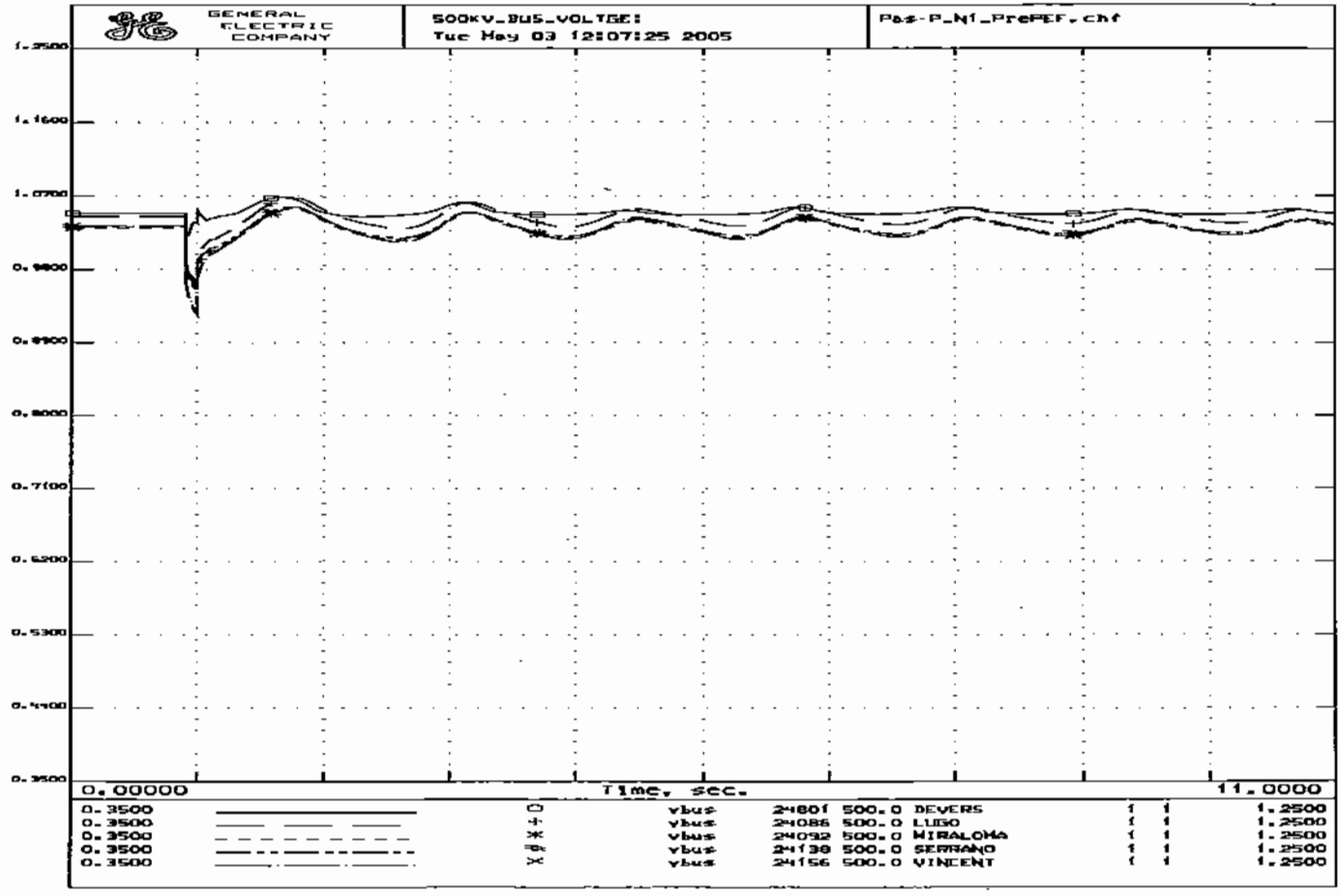
GENERAL ELECTRIC COMPANY
500kV_BUS_VOLTGE:
Tue May 03 12:07:25 2005
Pas-P_N1_PrePEF.chf
1.2500
1.1600
1.0700
0.9800
0.8900
0.8000
0.7100
0.6200
0.5300
0.4400
0.3500
0.00000
Time, sec.
11.0000
0.3500 vbus 24801 500.0 DEVERS 1 1 1.2500
0.3500 vbus 24086 500.0 LUGO 1 1 1.2500
0.3500 vbus 24092 500.0 MIRALOMA 1 1 1.2500
0.3500 vbus 24138 500.0 SERRANO 1 1 1.2500
0.3500 vbus 24156 500.0 VINCENT 1 1 1.2500

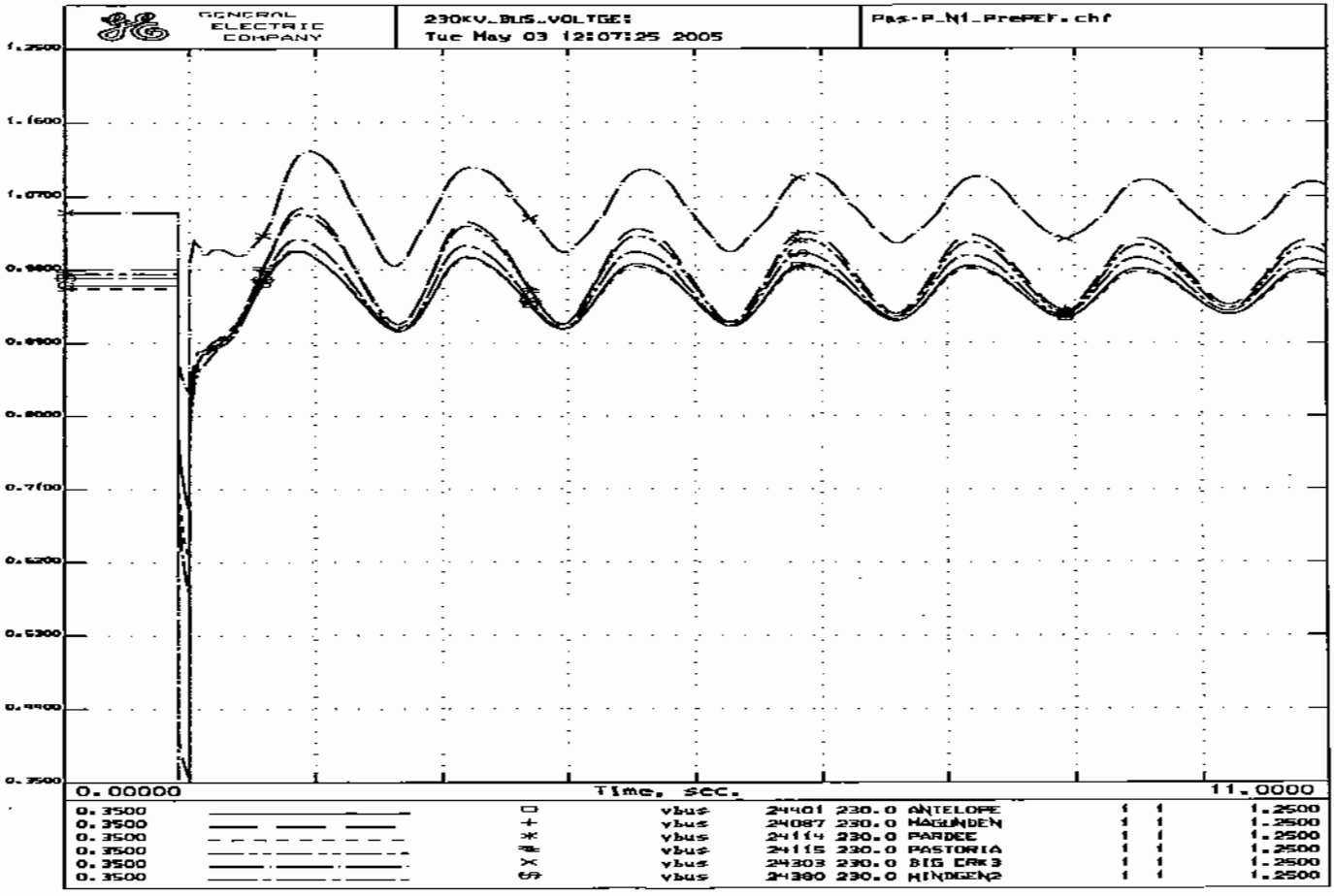
GENERAL ELECTRIC COMPANY
230KV_BUS_VOLTGE:
Tue May 03 12:07:25 2005
Pas-P_N1_PrePEF.chf
1.2500
1.1600
1.0700
0.9800
0.8900
0.8000
0.7100
0.6200
0.5300
0.4400
0.3500
0.00000
Time, sec.
11.0000
0.3500 vbus 24401 230.0 ANTELOPE 1 1 1.2500
0.3500 vbus 24087 230.0 MAGUNDEN 1 1 1.2500
0.3500 vbus 24114 230.0 PARDEE 1 1 1.2500
0.3500 vbus 24115 230.0 PASTORIA 1 1 1.2500
0.3500 vbus 24303 230.0 BIG EAK3 1 1 1.2500
0.3500 vbus 24380 230.0 HINDGENA 1 1 1.2500

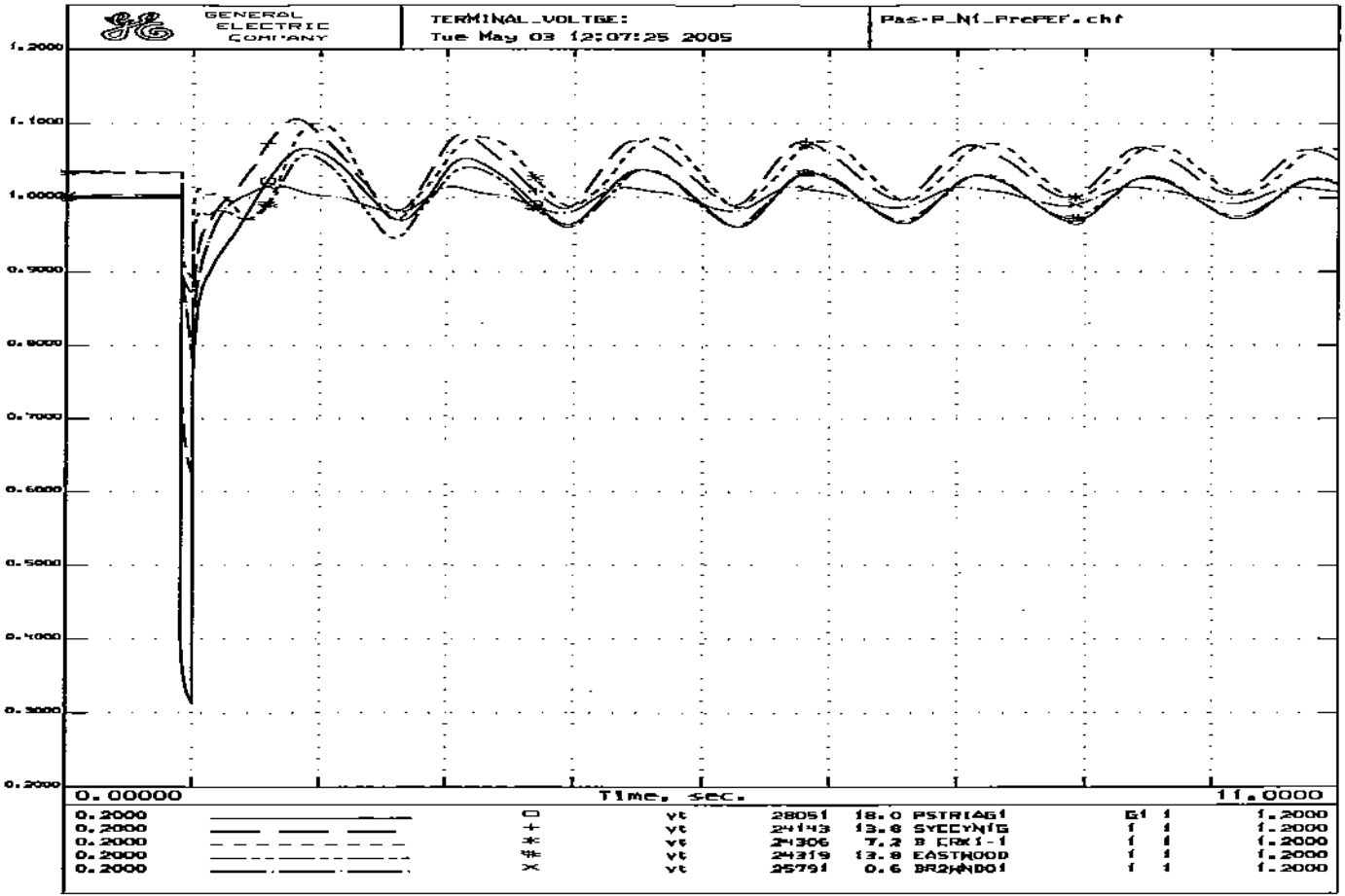
GENERAL ELECTRIC COMPANY
TERMINAL_VOLTGE:
Tue May 03 12:07:25 2005
Pas-P_N1_PrePEF.chf
1.2000
1.1000
1.0000
0.9000
0.8000
0.7000
0.6000
0.5000
0.4000
0.3000
0.2000
0.00000
Time, sec.
11.0000
0.2000 vt 28051 18.0 PSTRIAG1 G1 1 1.2000
0.2000 vt 24143 13.8 SYCCYNIG 1 1 1.2000
0.2000 vt 24306 7.2 B CRK1-1 1 1 1.2000
0.2000 vt 24319 13.8 EASTWOOD 1 1 1.2000
0.2000 vt 25791 0.6 BR2WNDO1 1 1 1.2000

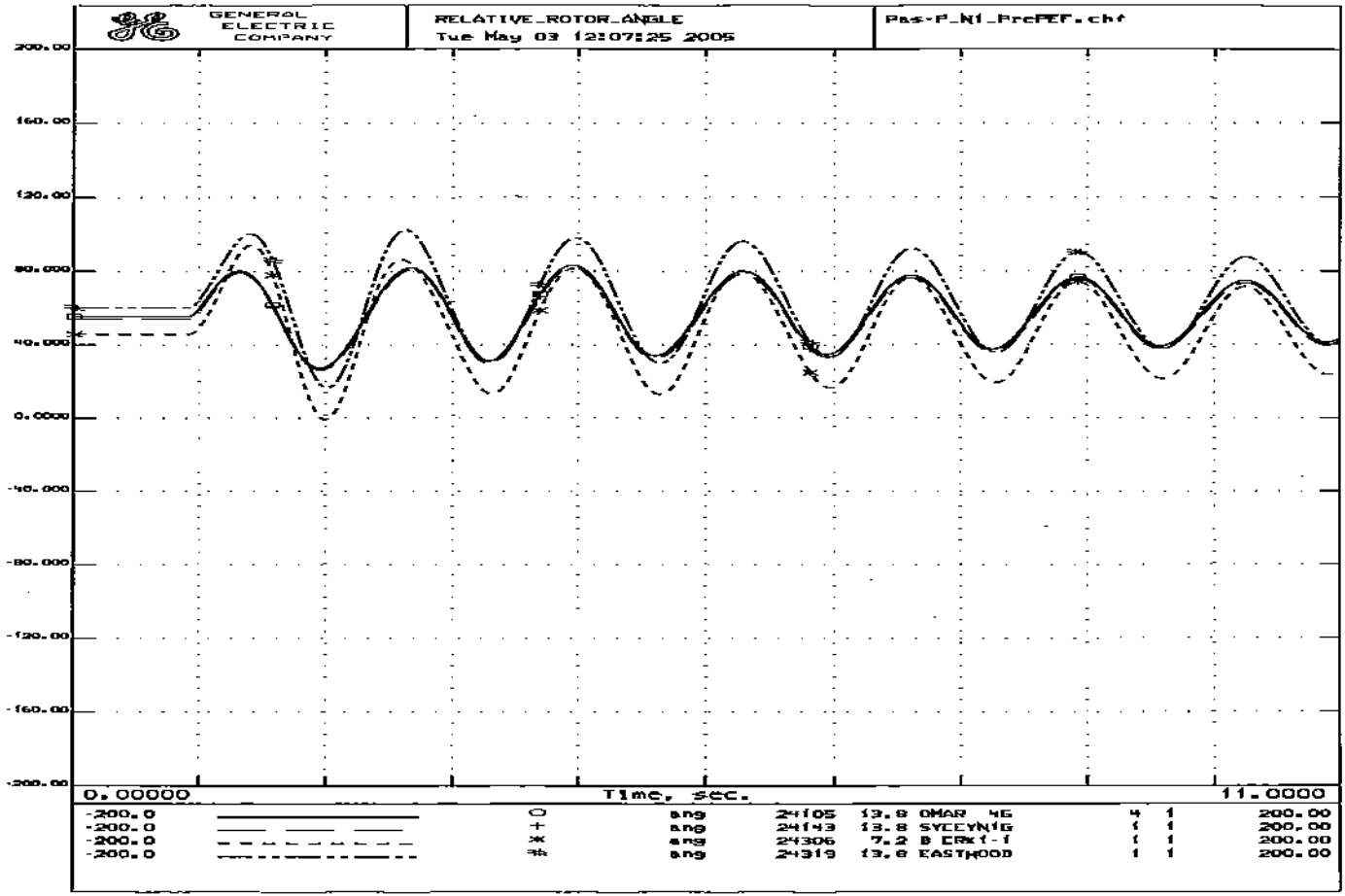
GENERAL ELECTRIC COMPANY
RELATIVE_ROTOR_ANGLE
Tue May 03 12:07:25 2005
Pas-P_N1_PrePEF.chf
200.00
160.00
120.00
80.000
40.000
0.0000
-40.000
-80.000
-120.00
-160.00
-200.00
0.00000
Time, sec.
11.0000
-200.0 ang 24105 13.8 OMAR 4G 4 1 200.00
-200.0 + ang 24143 13.8 SYCEYN1G 1 1 200.00
-200.0 * ang 24306 7.2 B ERK1-1 1 1 200.00
-200.0 ang 24319 13.8 EASTWOOD 1 1 200.00

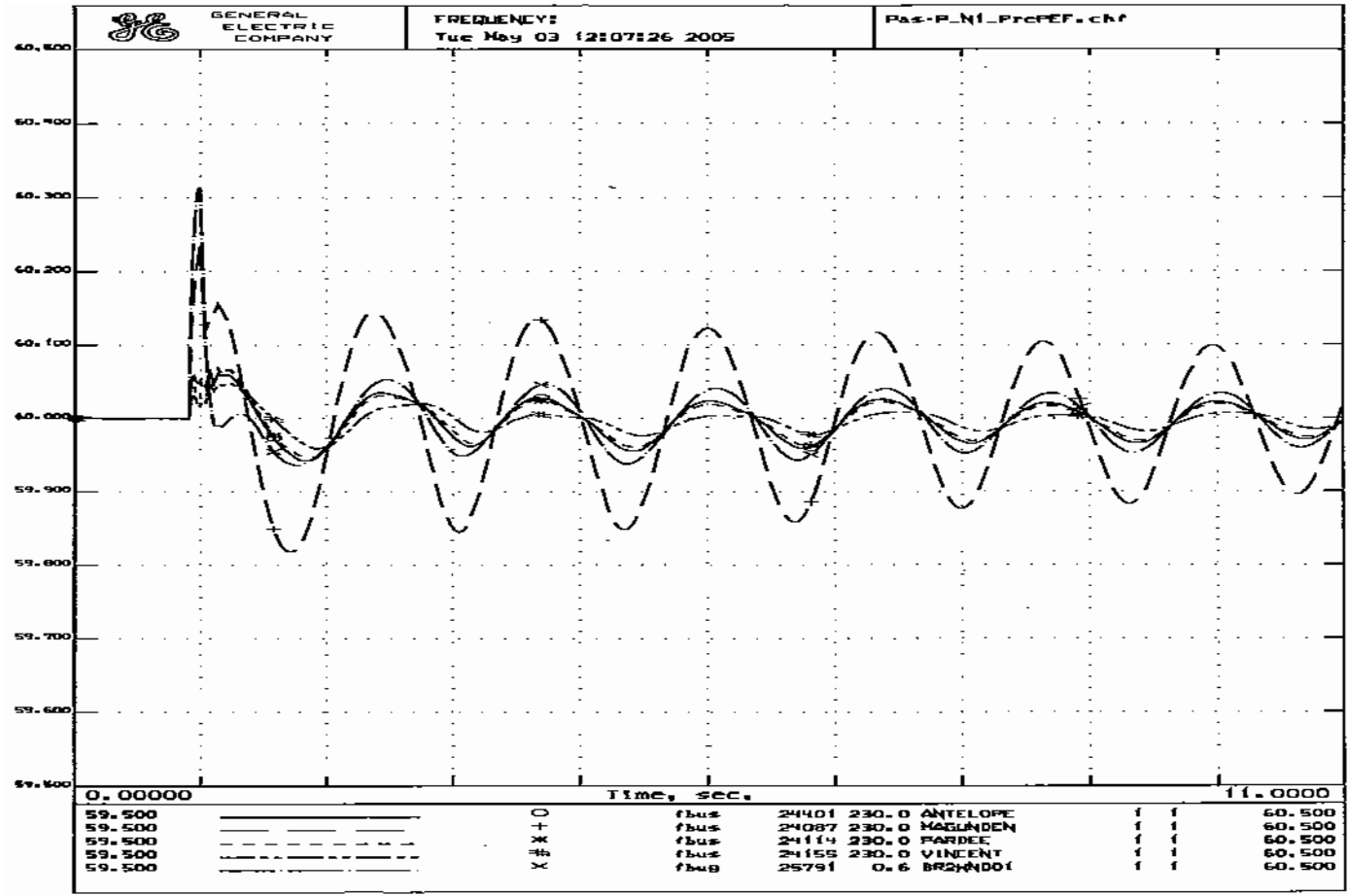
GENERAL ELECTRIC COMPANY
FREQUENCY:
Tue May 03 12:07:26 2005
Pas-P_N1_PrcPEF.chf
60.500
60.400
60.300
60.200
60.100
60.000
59.900
59.800
59.700
59.600
59.500
0.00000
Time, sec.
11.0000
59.500 ○ fbus 24401 230.0 ANTELOPE 1 1 60.500
59.500 + fbus 24087 230.0 MAGUNDEN 1 1 60.500
59.500 ✱ fbus 24114 230.0 PARDEE 1 1 60.500
59.500 # fbus 24155 230.0 VINCENT 1 1 60.500
59.500 × fbus 25791 0.6 BR2HNDO1

```
PrePEF_High_SOM.sav
PrePEF.dyd
TITLE
Calpine Pastoria Add Stability Study: Loss of One 230-KV Line
6-CYCLE 3-Phase Fault at Pastoria 230kV Bus
N-1 OUTAGE: Pardee-Pastoria-Warne 230kV Line
SYSTEM STABILITY CASE - Pas-W-P_N1_PrePEF.swt
PrePEF_High_SOM.sav + PrePEF.dyd + Pas-W-P_N1_PrePEF.swt
RUN 10.0
CC
CC   ***CALPINE PASTORIA ADD DYNAMIC STABILITY ASSESSMENT***
CC   APPLY A 3-PHASE FAULT ON THE PASTORIA 230-KV BUS
FB   0.0 "PASTORIA" 230
CC
CC   CLEAR FAULT IN 6 CYCLES
CFB  6.0 "PASTORIA" 230
CC
CC   REMOVE PARDEE-PASTORIA-WARNE 230-KV LINE
TG   6.0 "WARNE1   " 13.80 "1 "
TG   6.0 "WARNE2   " 13.80 "1 "
DL   6.0 "PARDEE   " 230.  "WARNETAP"  230.  "1 "
DL   6.0 "WARNE    " 230.  "WARNETAP"  230.  "1 "
DL   6.0 "PASTORIA" 230.  "WARNETAP"  230.  "1 "
```

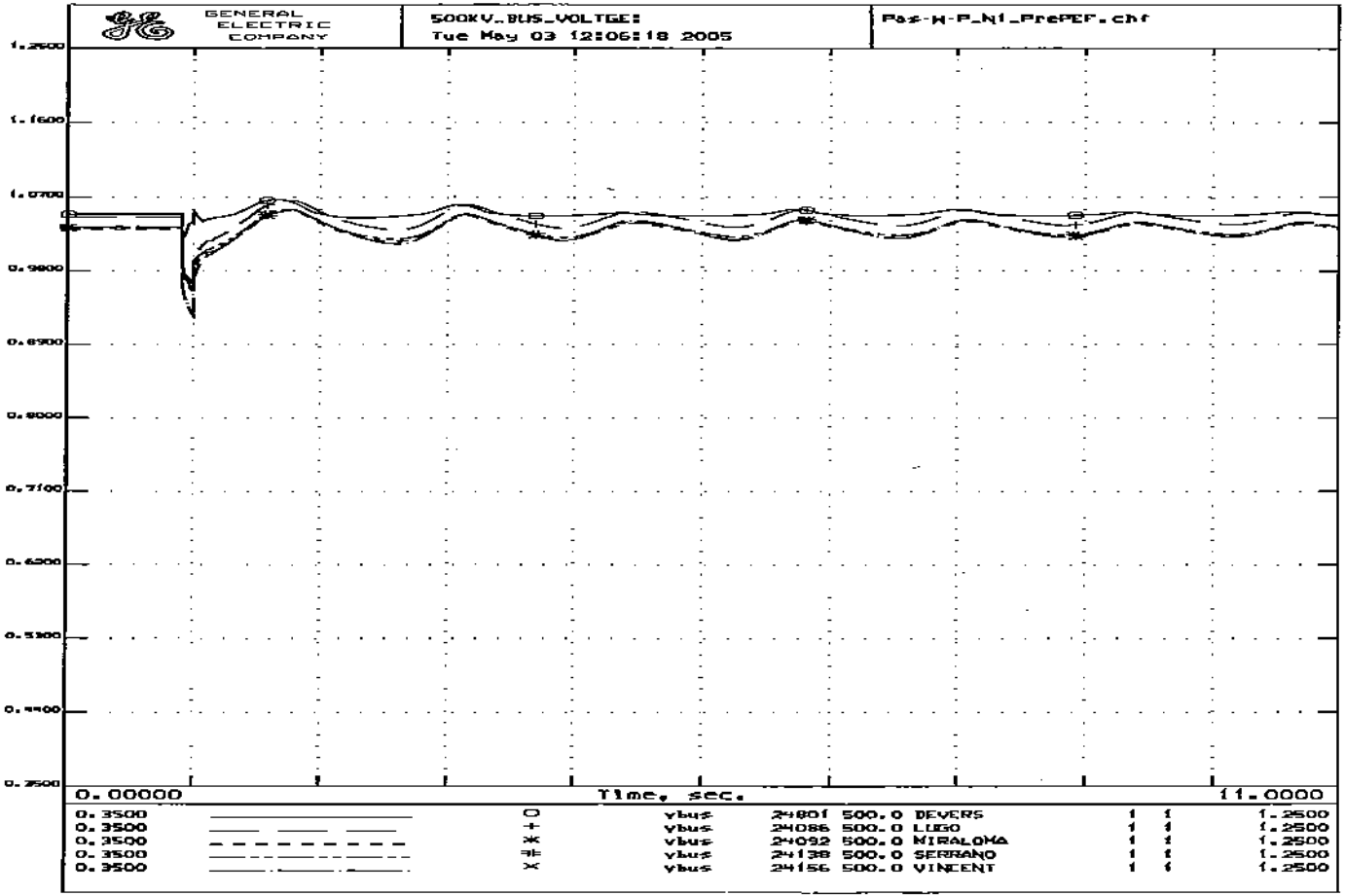
GENERAL ELECTRIC COMPANY
500KV_BUS_VOLTGE:
Tue May 03 12:06:18 2005
Pas-W-P_N1_PrePEF.chf
1.2500
1.1600
1.0700
0.9800
0.8900
0.8000
0.7100
0.6200
0.5300
0.4400
0.2500
0.00000
Time, sec.
11.0000
0.3500 O vbus 24801 500.0 DEVERS 1 1 1.2500
0.3500 + vbus 24086 500.0 LUGO 1 1 1.2500
0.3500 * vbus 24092 500.0 MIRALOMA 1 1 1.2500
0.3500 vbus 24138 500.0 SERRANO 1 1 1.2500
0.3500 X vbus 24156 500.0 VINCENT 1 1 1.2500

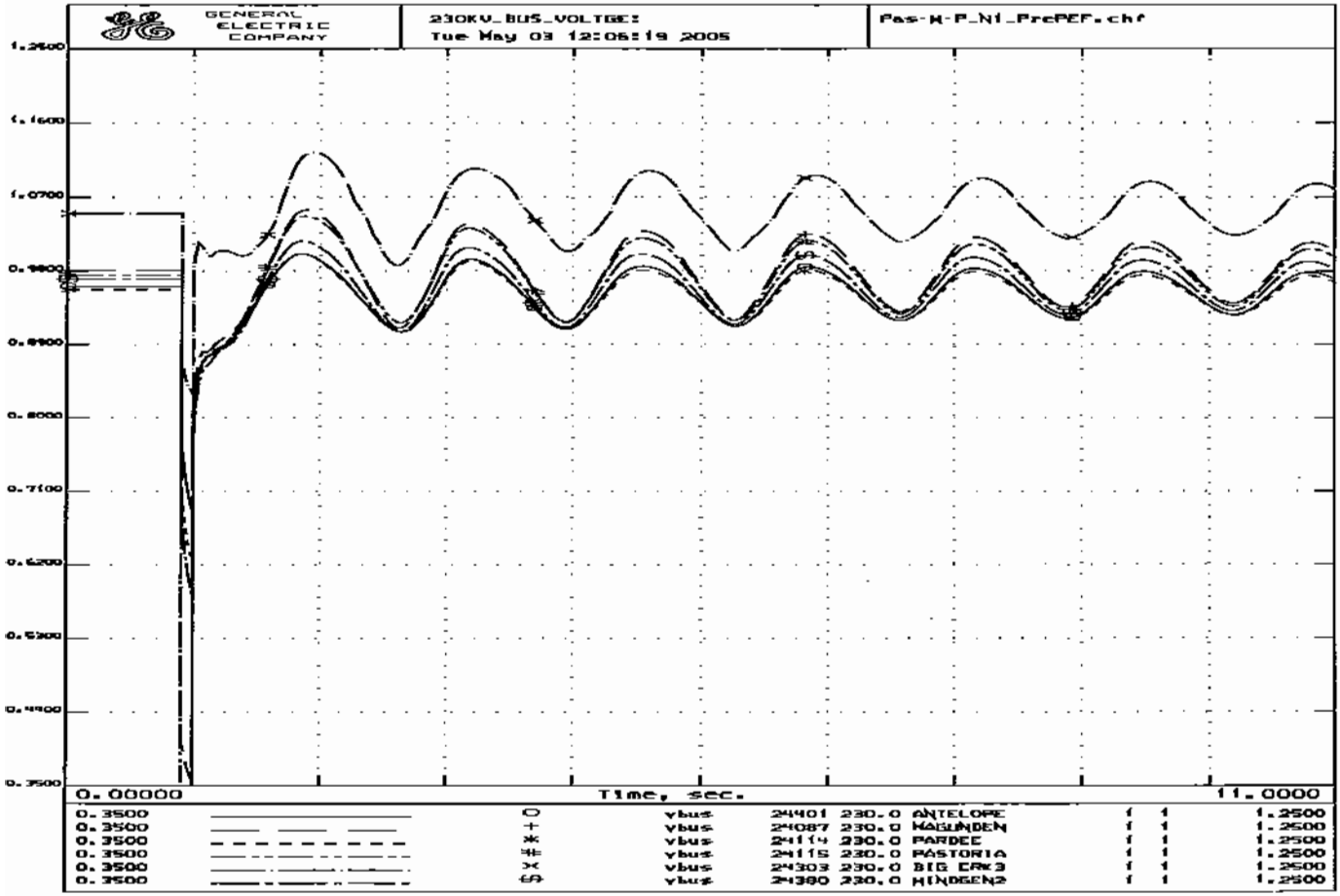
GENERAL ELECTRIC COMPANY
230KV_BUS_VOLTGE:
Tue May 03 12:06:19 2005
Pas-W-P_N1_PrePEF.chf
1.2500
1.1600
1.0700
0.9800
0.8900
0.8000
0.7100
0.6200
0.5300
0.4400
0.3500
0.00000
Time, sec.
11.0000
0.3500 ○ vbus 24401 230.0 ANTELOPE 1 1 1.2500
0.3500 + vbus 24087 230.0 MABUNDEN 1 1 1.2500
0.3500 * vbus 24114 230.0 PARDEE 1 1 1.2500
0.3500 # vbus 24115 230.0 PASTORIA 1 1 1.2500
0.3500 × vbus 24303 230.0 BIG CRK3 1 1 1.2500
0.3500 ◇ vbus 24380 230.0 MINDGEN2 1 1 1.2500

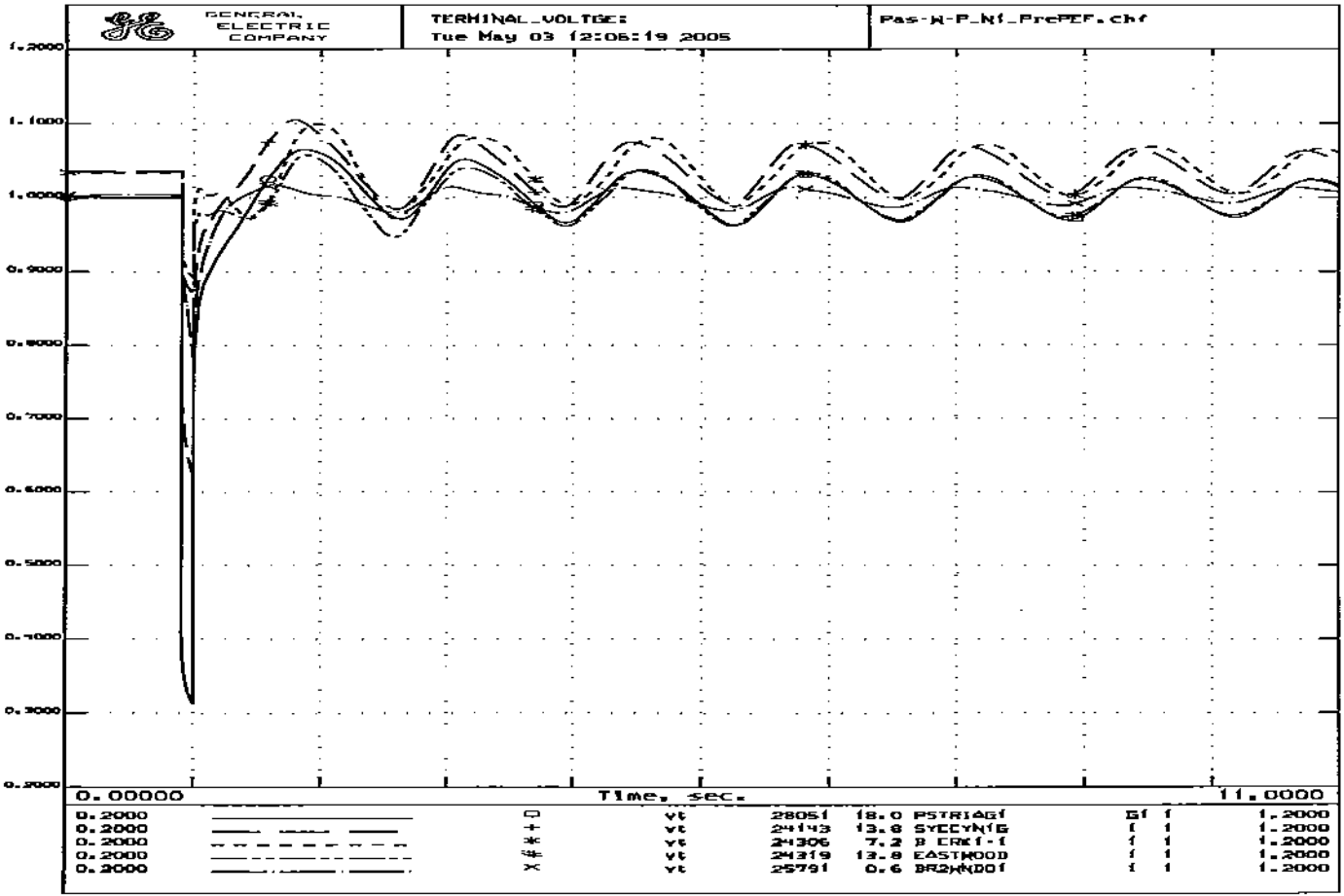
GENERAL ELECTRIC COMPANY
TERMINAL_VOLTGE:
Tue May 03 12:06:19 2005
Pas-W-P_N1_PrePEF.chf
1.2000
1.1000
1.0000
0.9000
0.8000
0.7000
0.6000
0.5000
0.4000
0.3000
0.2000
0.00000
Time, sec.
11.0000
0.2000 □ vt 28051 18.0 PSTRIAG1 G1 1 1.2000
0.2000 + vt 24143 13.8 SYCCYN1G 1 1 1.2000
0.2000 * vt 24306 7.2 B CRK1-1 1 1 1.2000
0.2000 # vt 24319 13.8 EASTWOOD 1 1 1.2000
0.2000 X vt 25791 0.6 BR2WNDO1 1 1 1.2000

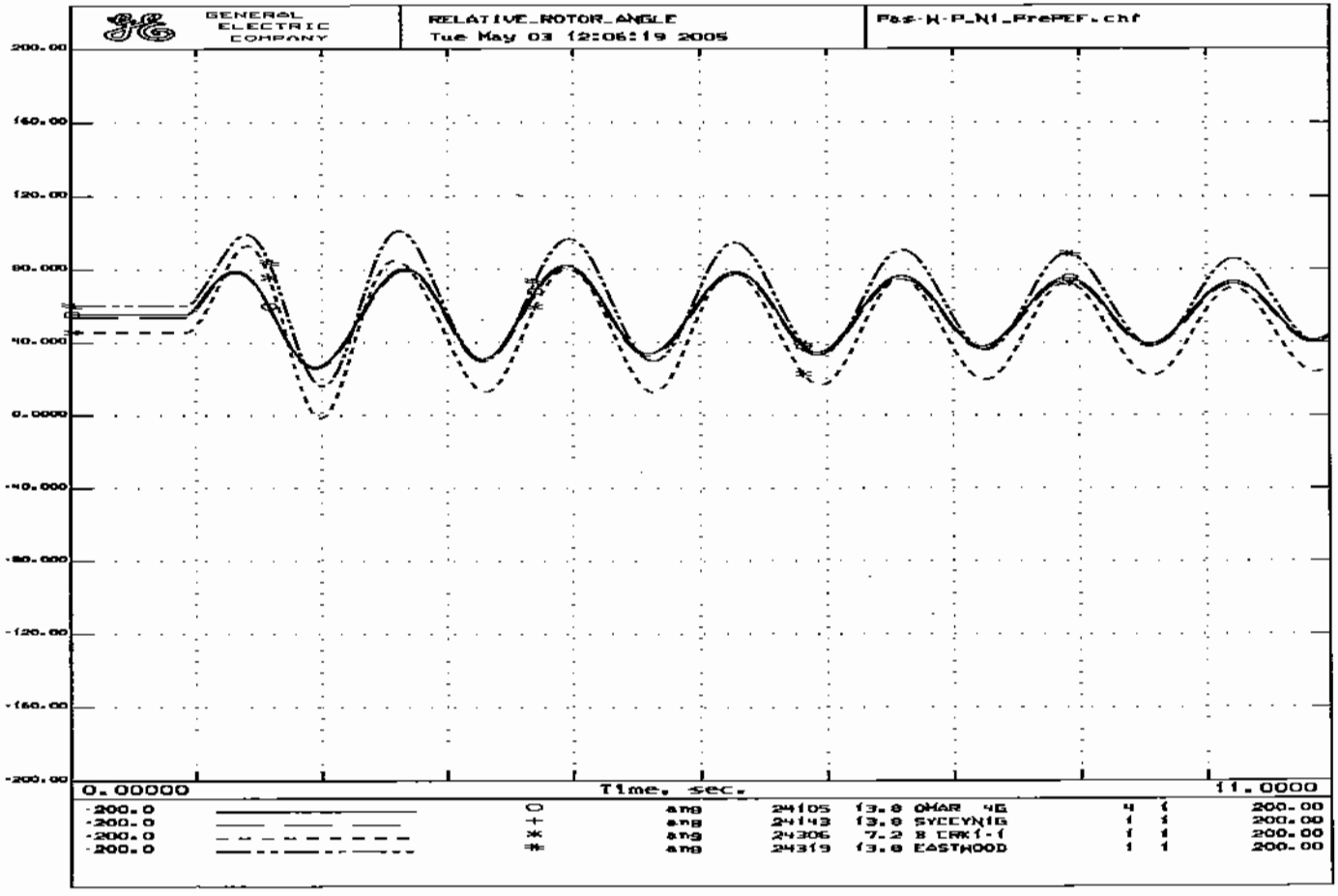
GENERAL ELECTRIC COMPANY
RELATIVE_ROTOR_ANGLE
Tue May 03 12:06:19 2005
P&F-H-P_N1_PrePEF.chf
200.00
160.00
120.00
80.000
40.000
0.0000
-40.000
-80.000
-120.00
-160.00
-200.00
0.00000
Time, sec.
11.0000
-200.0 ang 24105 13.8 OMAR 4G 4 1 200.00
-200.0 ang 24143 13.8 SYCCYN1G 1 1 200.00
-200.0 ang 24306 7.2 8 CRK1-1 1 1 200.00
-200.0 ang 24319 13.8 EASTWOOD 1 1 200.00

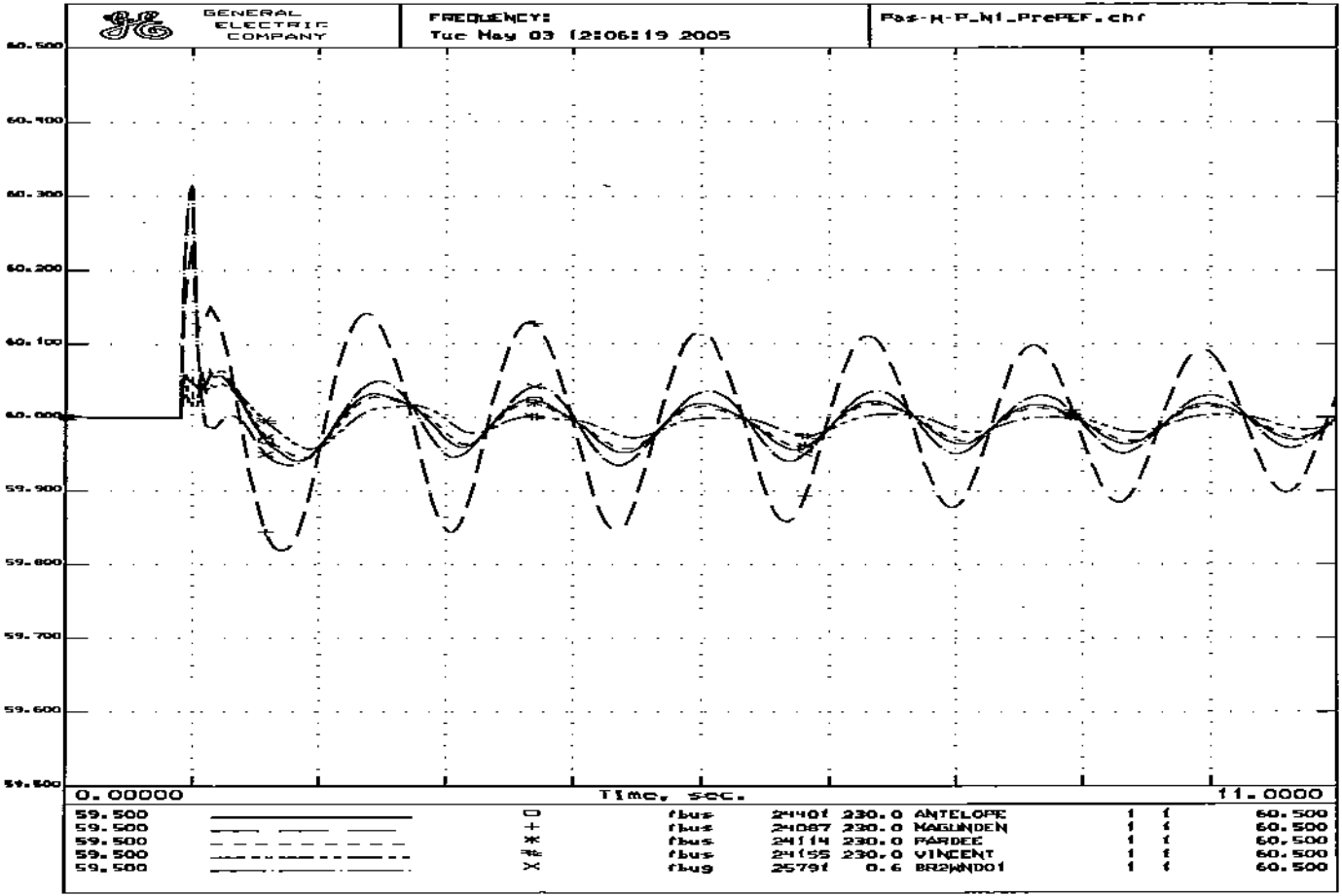
GENERAL ELECTRIC COMPANY
FREQUENCY:
Tue May 03 12:06:19 2005
Fas-M-P_N1_PrePEF.chf
60.500
60.400
60.300
60.200
60.100
60.000
59.900
59.800
59.700
59.600
59.500
0.00000
Time, sec.
11.0000
59.500 □ fbus 24401 230.0 ANTELOPE 1 f 60.500
59.500 + fbus 24087 230.0 MAGUNDEN 1 f 60.500
59.500 * fbus 24114 230.0 PARDEE 1 f 60.500
59.500 ✱ fbus 24155 230.0 VINCENT 1 f 60.500
59.500 × fbug 25791 0.6 BR2WND01 1 f 60.500

APPENDIX E

STABILITY STUDIES
N-1

POST-PROJECT

```
PostPEF_High_SOM.sav
PostPEF.dyd
TITLE
Calpine Pastoria Add Stability Study: Loss of One 230-KV Line
6-CYCLE 3-Phase Fault at Antelope 230kV Bus
N-1 OUTAGE: Magunden-Antelope No.1 230kV Line
SYSTEM STABILITY CASE - A-Ma_N1_PostPEF.swt
PostPEF_High_SOM.sav + PostPEF.dyd + A-Ma_N1_PostPEF.swt
RUN 10.0
CC
CC   ***CALPINE PASTORIA ADD DYNAMIC STABILITY ASSESSMENT***
CC   APPLY A 3-PHASE FAULT ON THE ANTELOPE 230-KV BUS
PB   0.0 "ANTELOPE" 230
CC
CC   CLEAR FAULT IN 6 CYCLES
CFB 6.0 "ANTELOPE" 230
CC
CC   REMOVE MAGUNDEN-ANTELOPE NO.1 230-KV LINE
DL   6.0 "MAGUNDEN" 230, "ANTELOPE" 230, "1 "
```

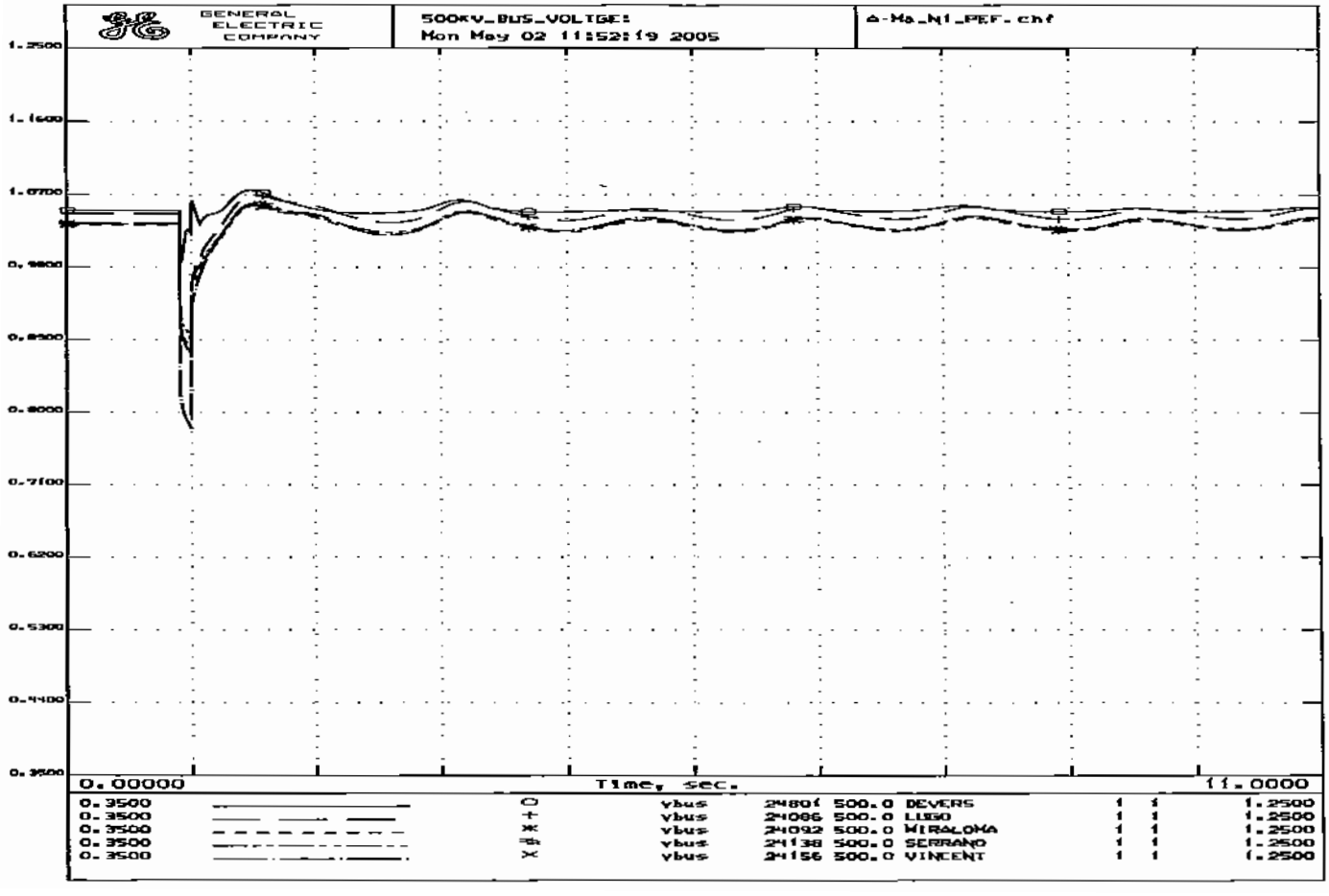
GENERAL ELECTRIC COMPANY
500KV_BUS_VOLTGE:
Mon May 02 11:52:19 2005
Δ-Ma_N1_PEF.chf
1.2500
1.1600
1.0700
0.9800
0.8900
0.8000
0.7100
0.6200
0.5300
0.4400
0.3500
0.00000
Time, sec.
11.0000
0.3500 ○ vbus 24801 500.0 DEVERS 1 1 1.2500
0.3500 + vbus 24086 500.0 LUGO 1 1 1.2500
0.3500 × vbus 24092 500.0 MIRALOMA 1 1 1.2500
0.3500 vbus 24138 500.0 SERRANO 1 1 1.2500
0.3500 × vbus 24156 500.0 VINCENT 1 1 1.2500

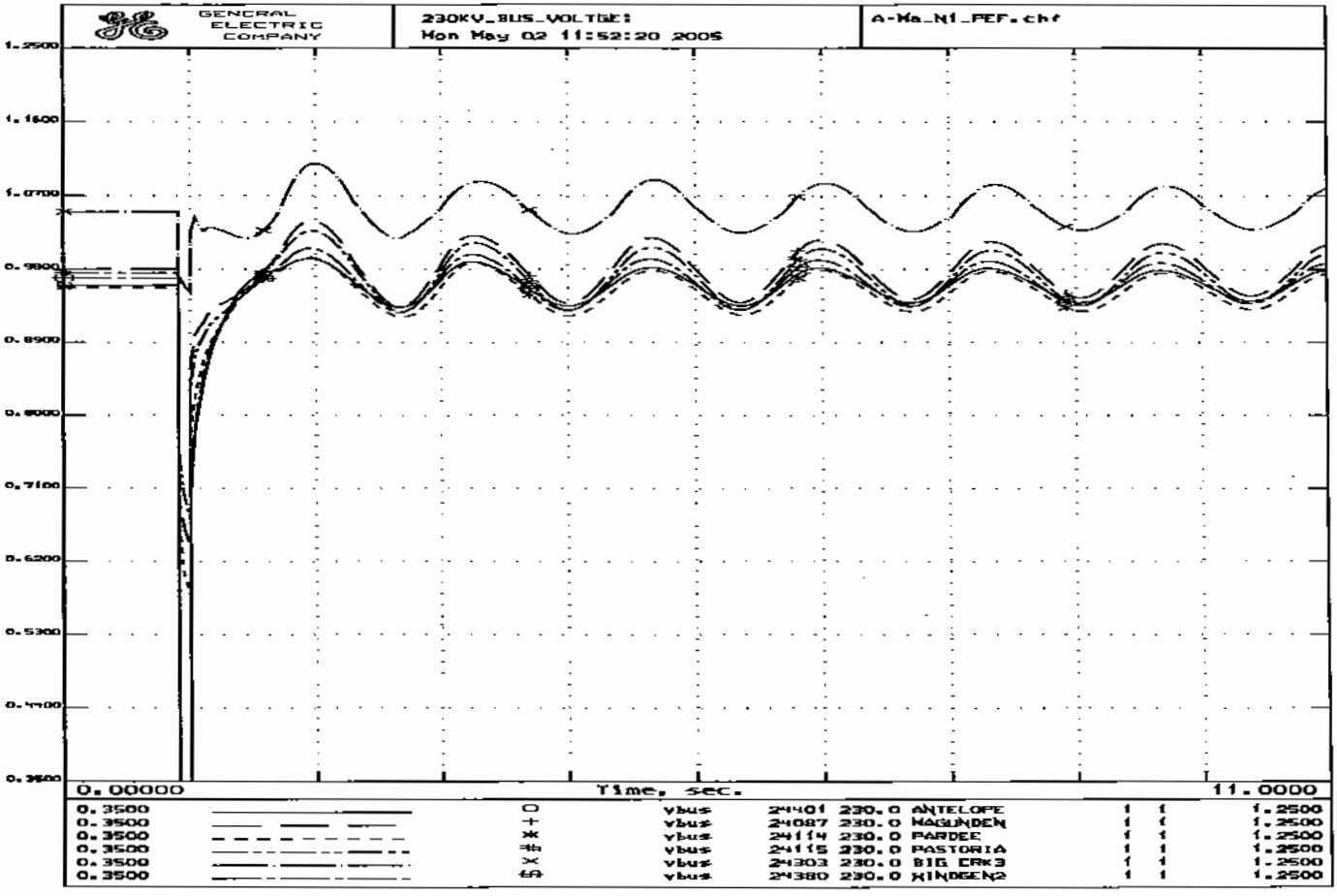
GENERAL ELECTRIC COMPANY
230KV_BUS_VOLTGE:
Mon May 02 11:52:20 2005
A-Ma_N1_PEF.chf
1.2500
1.1600
1.0700
0.9800
0.8900
0.8000
0.7100
0.6200
0.5300
0.4400
0.3500
0.00000
Time, sec.
11.0000
0.3500 ○ vbus 24401 230.0 ANTELOPE 1 1 1.2500
0.3500 + vbus 24087 230.0 MAGUNDEN 1 1 1.2500
0.3500 ✱ vbus 24114 230.0 PARDEE 1 1 1.2500
0.3500 # vbus 24115 230.0 PASTORIA 1 1 1.2500
0.3500 × vbus 24303 230.0 BIG ERK3 1 1 1.2500
0.3500 ⊕ vbus 24380 230.0 WINDGEN2 1 1 1.2500

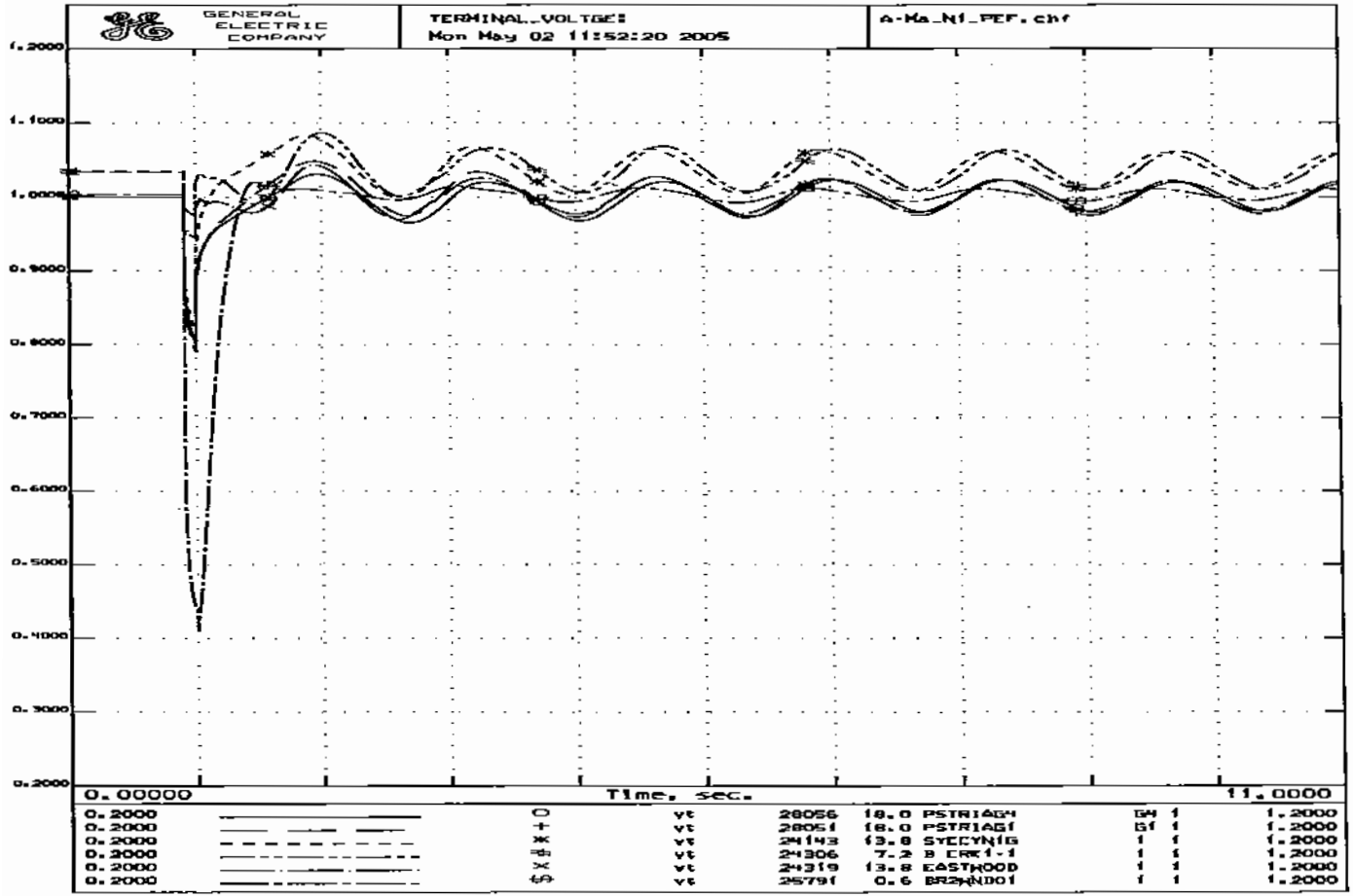
GENERAL ELECTRIC COMPANY
TERMINAL_VOLTGE:
Mon May 02 11:52:20 2005
A-Ma_N1_PEF.chf
1.2000
1.1000
1.0000
0.9000
0.8000
0.7000
0.6000
0.5000
0.4000
0.3000
0.2000
0.00000
Time, sec.
11.0000
0.2000 ○ vt 28056 18.0 PSTRIAGH GM 1 1.2000
0.2000 + vt 28051 18.0 PSTRIAGI GI 1 1.2000
0.2000 ✳ vt 24143 13.8 SYECYNIG 1 1 1.2000
0.2000 vt 24306 7.2 B ERK1-1 1 1 1.2000
0.2000 vt 24319 13.8 EASTWOOD 1 1 1.2000
0.2000 vt 25791 0.6 BRANDO1 1 1 1.2000

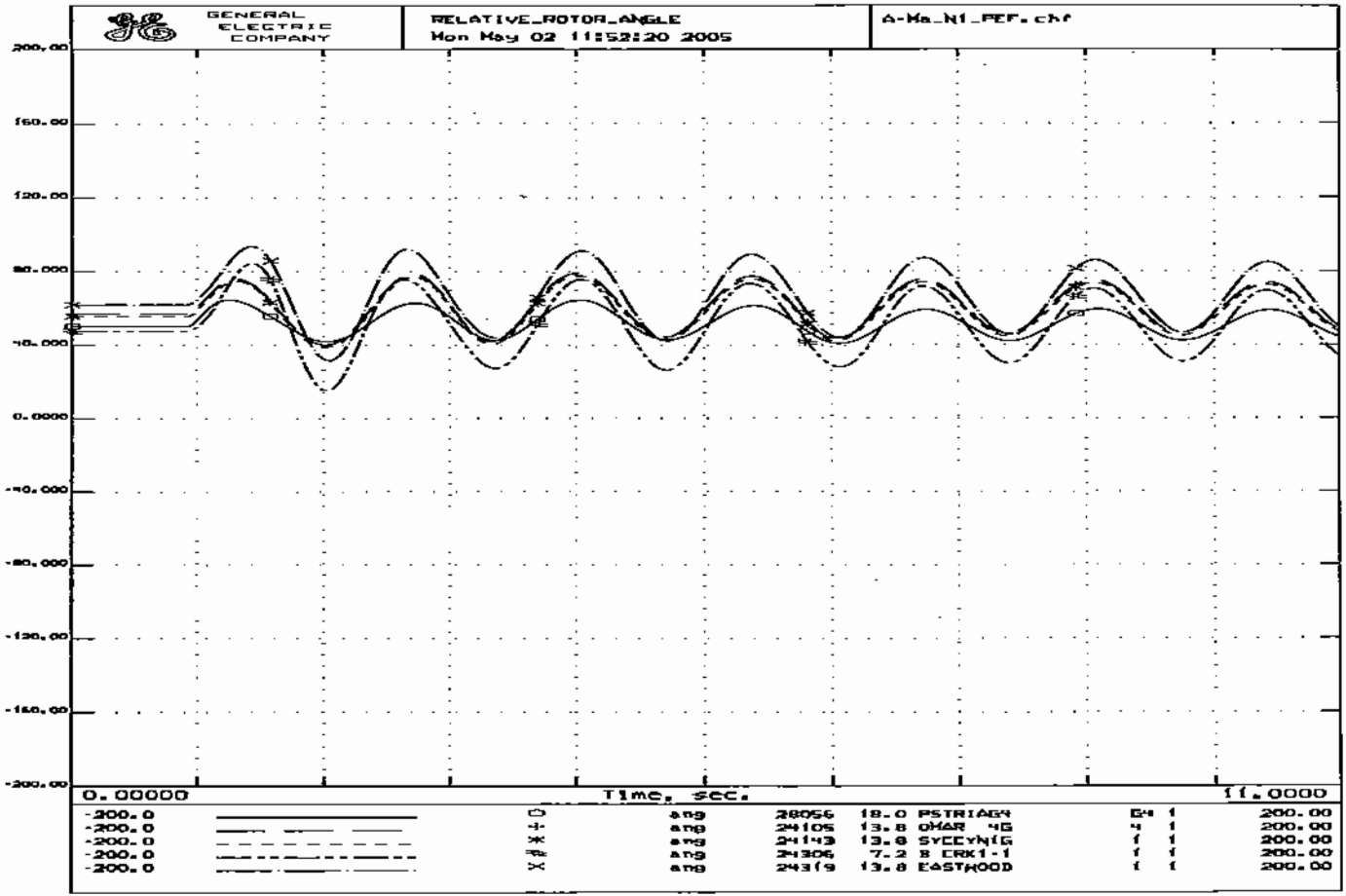
GENERAL ELECTRIC COMPANY
RELATIVE_ROTOR_ANGLE
Mon May 02 11:52:20 2005
A-Ma_N1_PEF.chf
200.00
160.00
120.00
80.000
40.000
0.0000
-40.000
-80.000
-120.00
-160.00
-200.00
0.00000
Time, sec.
11.0000
-200.0 ang 28056 18.0 PSTRIAGH 64 1 200.00
-200.0 ang 24105 13.8 OHAR 4G 4 1 200.00
-200.0 ang 24143 13.8 SYCCYNIG 1 1 200.00
-200.0 ang 24306 7.2 B ERK1-1 1 1 200.00
-200.0 ang 24319 13.8 EASTWOOD 1 1 200.00

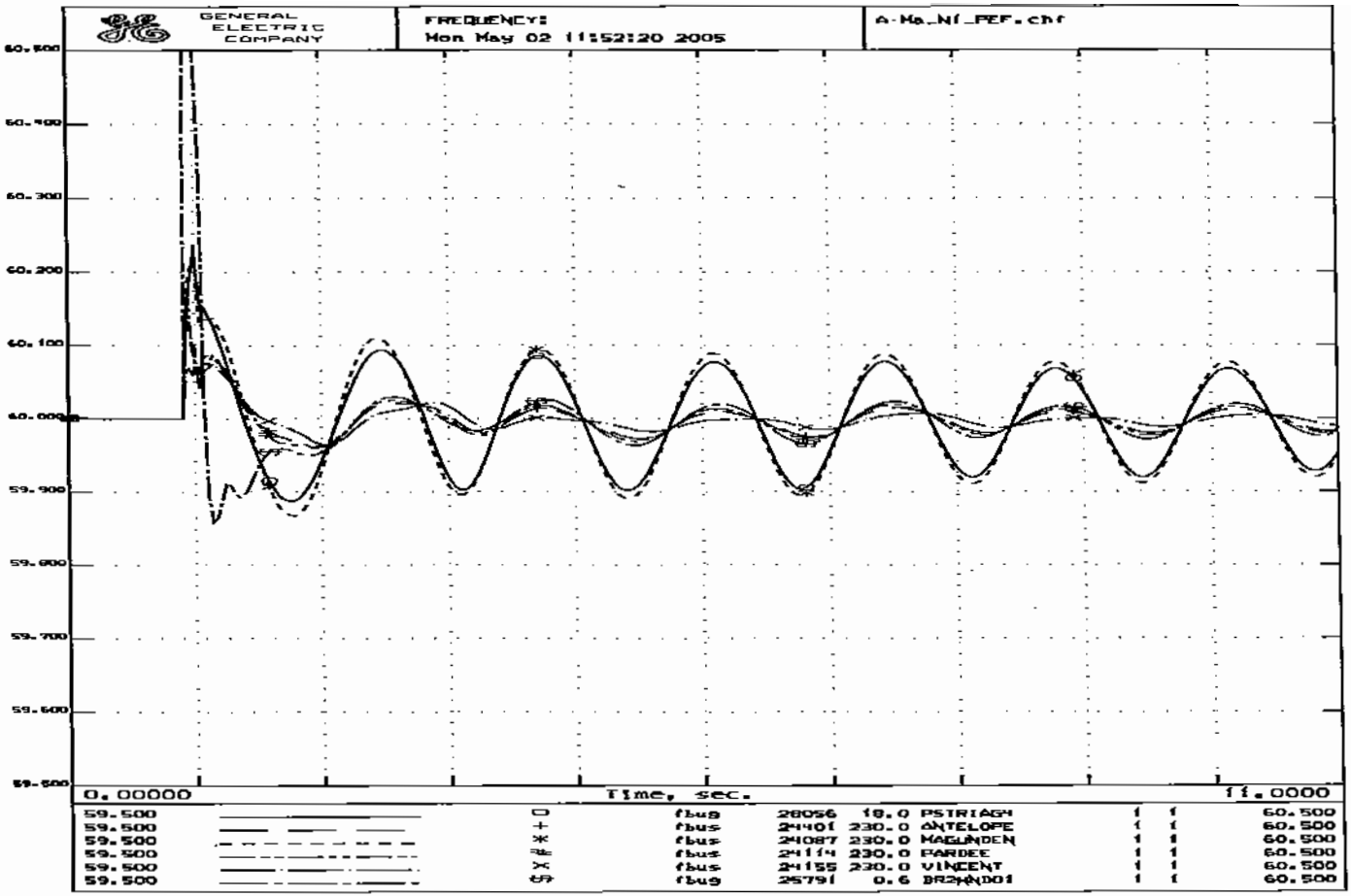
GENERAL ELECTRIC COMPANY
FREQUENCY:
Mon May 02 11:52:20 2005
A-Ma_Nf_PEF.chf
60.500
60.400
60.300
60.200
60.100
60.000
59.900
59.800
59.700
59.600
59.500
0.00000
Time, sec.
11.0000
59.500 fbus 28056 18.0 PSTRIAGH 1 1 60.500
59.500 fbus 24401 230.0 ANTELOPE 1 1 60.500
59.500 fbus 24087 230.0 MAGUNDEN 1 1 60.500
59.500 fbus 24114 230.0 PARDEE 1 1 60.500
59.500 fbus 24155 230.0 VINCENT 1 1 60.500
59.500 fbus 25791 0.6 BR2WNDO1 1 1 60.500

```
PostPEF_High_SOM.sav
PostPEF.dyd
TITLE
Calpine Pastoria Add Stability Study: Loss of One 230-KV Line
6-CYCLE 3-Phase Fault at Antelope 230kV Bus
N-1 OUTAGE: Mesa-Antelope 230kV Line
SYSTEM STABILITY CASE - A-Me_N1_PostPEF.swt
PostPEF_High_SOM.sav + PostPEF.dyd + A-Me_N1_PostPEF.swt
RUN 10.0
CC
CC   ***CALPINE PASTORIA ADD DYNAMIC STABILITY ASSESSMENT***
CC   APPLY A 3-PHASE FAULT ON THE ANTELOPE 230-KV BUS
FB   0.0 "ANTELOPE" 230
CC
CC   CLEAR FAULT IN 6 CYCLES
CFB  6.0 "ANTELOPE" 230
CC
CC   REMOVE MESA-ANTELOPE 230-KV LINE
DL   6.0 "MESA CAL" 230. "ANTELOPE" 230. "1 "
```

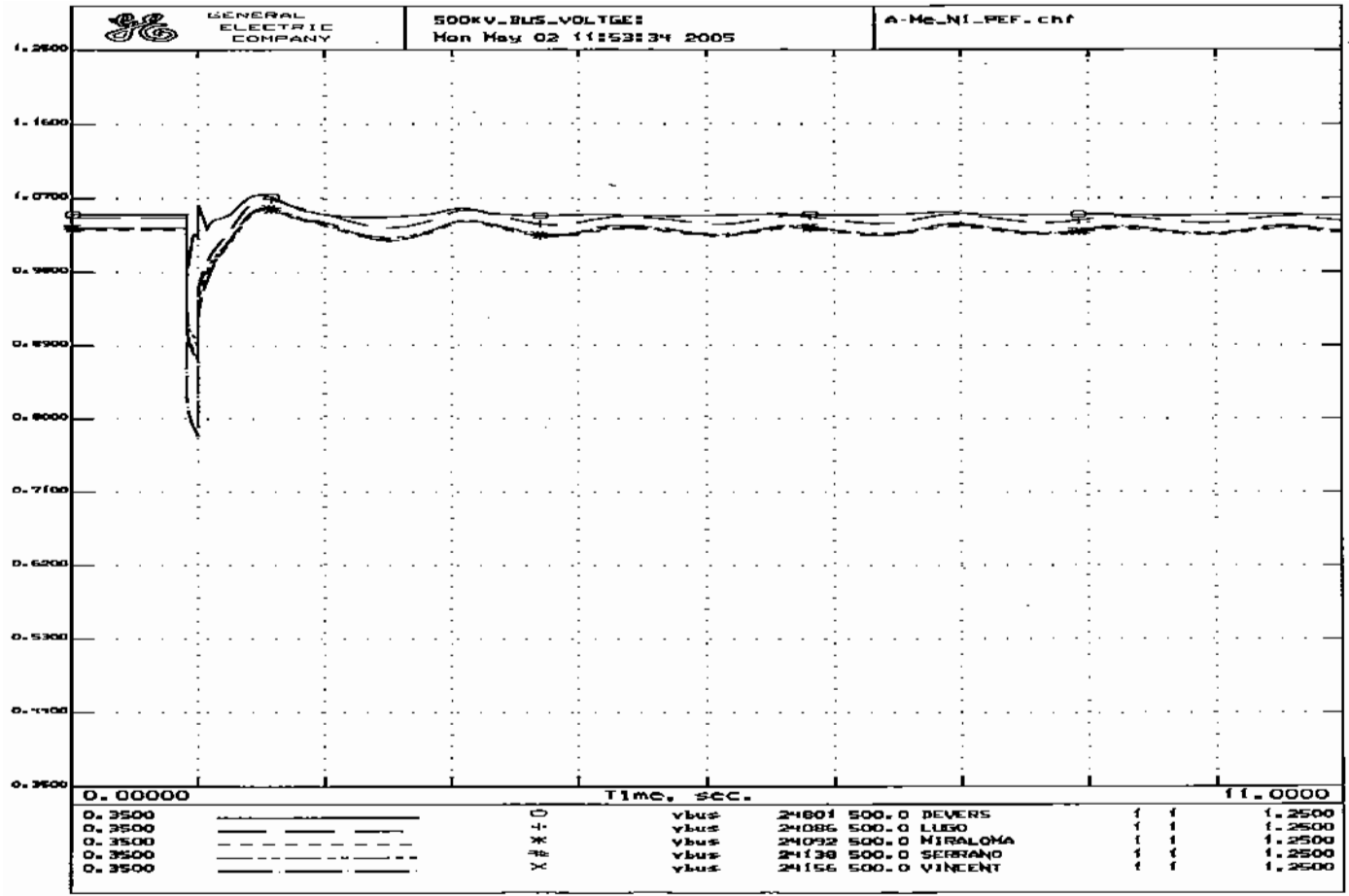
GENERAL ELECTRIC COMPANY
500KV_BUS_VOLTGE:
Mon May 02 11:53:34 2005
A-Me_NI_PEF.chf
1.2500
1.1600
1.0700
0.9800
0.8900
0.8000
0.7100
0.6200
0.5300
0.4400
0.3500
0.00000
Time, sec.
11.0000
0.3500 vbus 24001 500.0 DEVERS 1 1 1.2500
0.3500 vbus 24086 500.0 LUGO 1 1 1.2500
0.3500 vbus 24092 500.0 MIRALOMA 1 1 1.2500
0.3500 vbus 24138 500.0 SERRANO 1 1 1.2500
0.3500 vbus 24156 500.0 VINCENT 1 1 1.2500

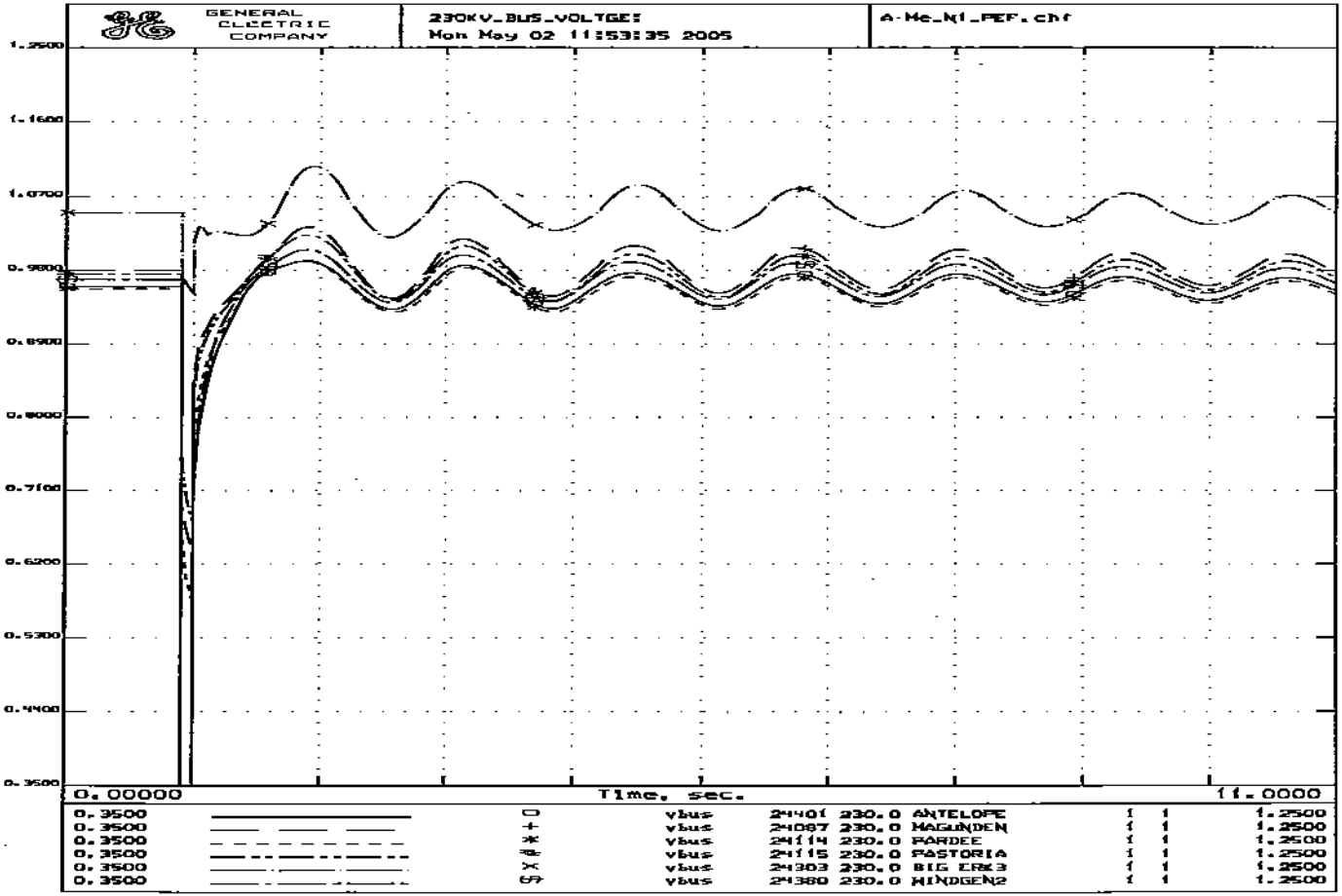
GENERAL ELECTRIC COMPANY
230KV_BUS_VOLTGE:
Mon May 02 11:53:35 2005
A-Me_N1_PEF.chf
1.2500
1.1600
1.0700
0.9800
0.8900
0.8000
0.7100
0.6200
0.5300
0.4400
0.3500
0.00000
Time, sec.
11.0000
0.3500 vbus 24401 230.0 ANTELOPE 1 1 1.2500
0.3500 vbus 24087 230.0 MAGUNDEN 1 1 1.2500
0.3500 vbus 24114 230.0 PARDEE 1 1 1.2500
0.3500 vbus 24115 230.0 PASTORIA 1 1 1.2500
0.3500 vbus 24303 230.0 BIG EAK3 1 1 1.2500
0.3500 vbus 24380 230.0 WINDGEN2 1 1 1.2500

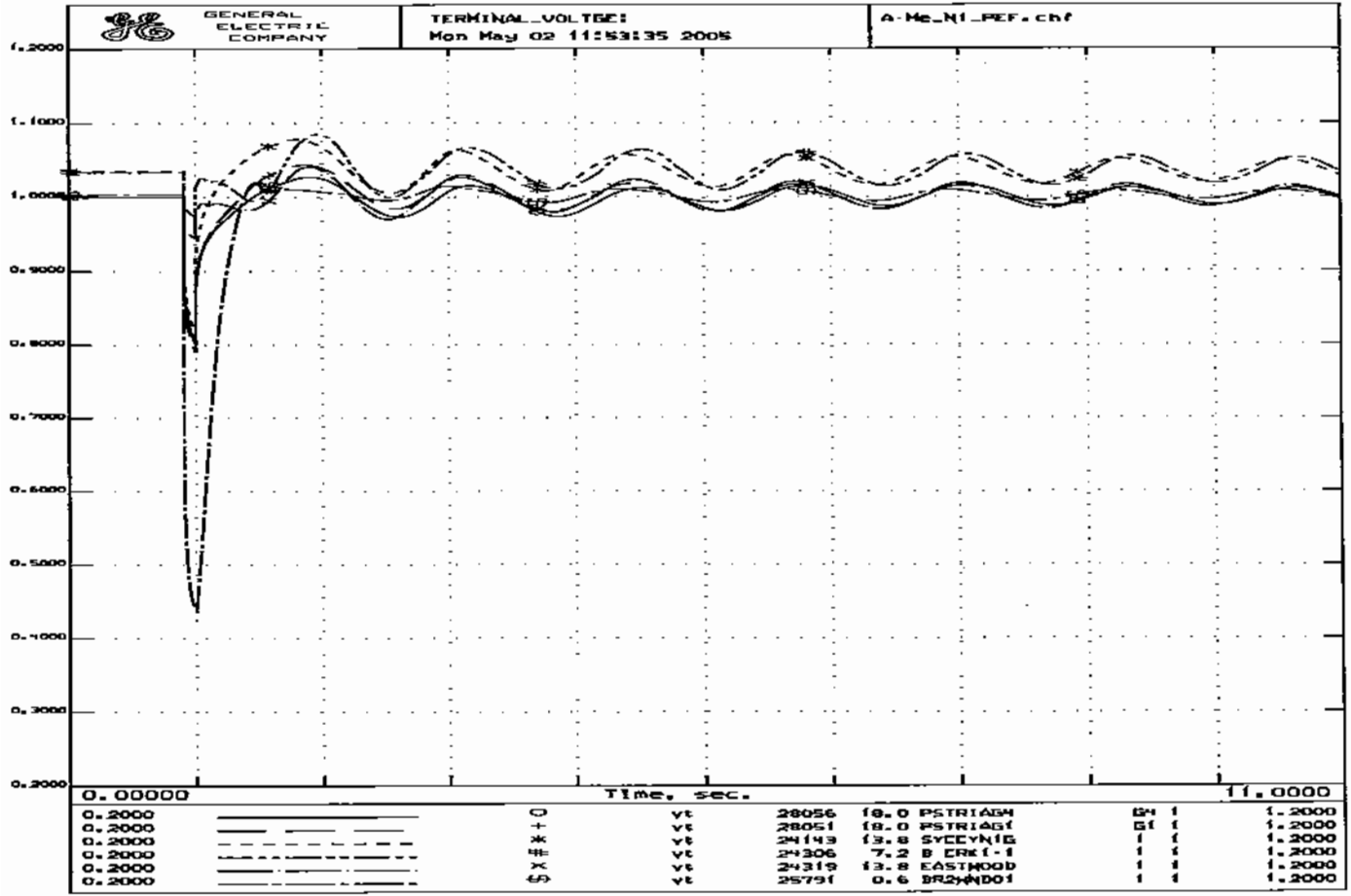
GENERAL ELECTRIC COMPANY
TERMINAL_VOLTGE:
Mon May 02 11:53:35 2005
A-Me_N1_PEF.chf
1.2000
1.1000
1.0000
0.9000
0.8000
0.7000
0.6000
0.5000
0.4000
0.3000
0.2000
0.00000
Time, sec.
11.0000
0.2000 ○ vt 28056 18.0 PSTRIAGM G4 1 1.2000
0.2000 + vt 28051 18.0 PSTRIAG1 G1 1 1.2000
0.2000 ✱ vt 24143 13.8 SYCCYN1G 1 1 1.2000
0.2000 ✱ vt 24306 7.2 B ERK1-1 1 1 1.2000
0.2000 × vt 24319 13.8 EASTWOOD 1 1 1.2000
0.2000 vt 25791 0.6 BR2HNDO1 1 1 1.2000

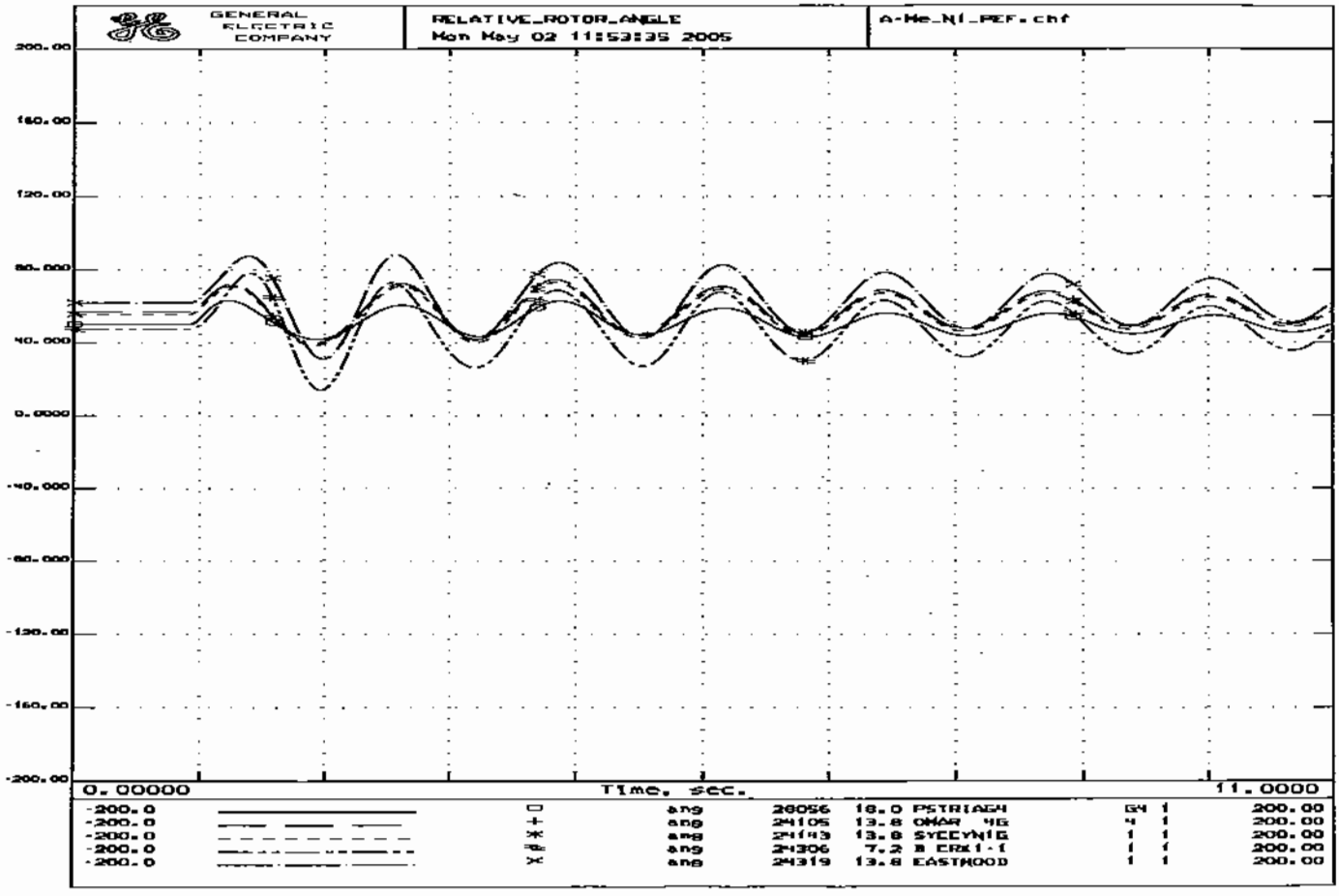
GENERAL ELECTRIC COMPANY
RELATIVE_ROTOR_ANGLE
Mon May 02 11:53:35 2005
A-Me_N1_PEF.chf
200.00
160.00
120.00
80.000
40.000
0.0000
-40.000
-80.000
-120.00
-160.00
-200.00
0.00000
Time, sec.
11.0000
-200.0 ang 28056 18.0 PSTRIAGH G4 1 200.00
-200.0 ang 24105 13.8 OMAR 4G 4 1 200.00
-200.0 ang 24143 13.8 SYCCYN1G 1 1 200.00
-200.0 ang 24306 7.2 B ERX1-1 1 1 200.00
-200.0 ang 24319 13.8 EASTWOOD 1 1 200.00

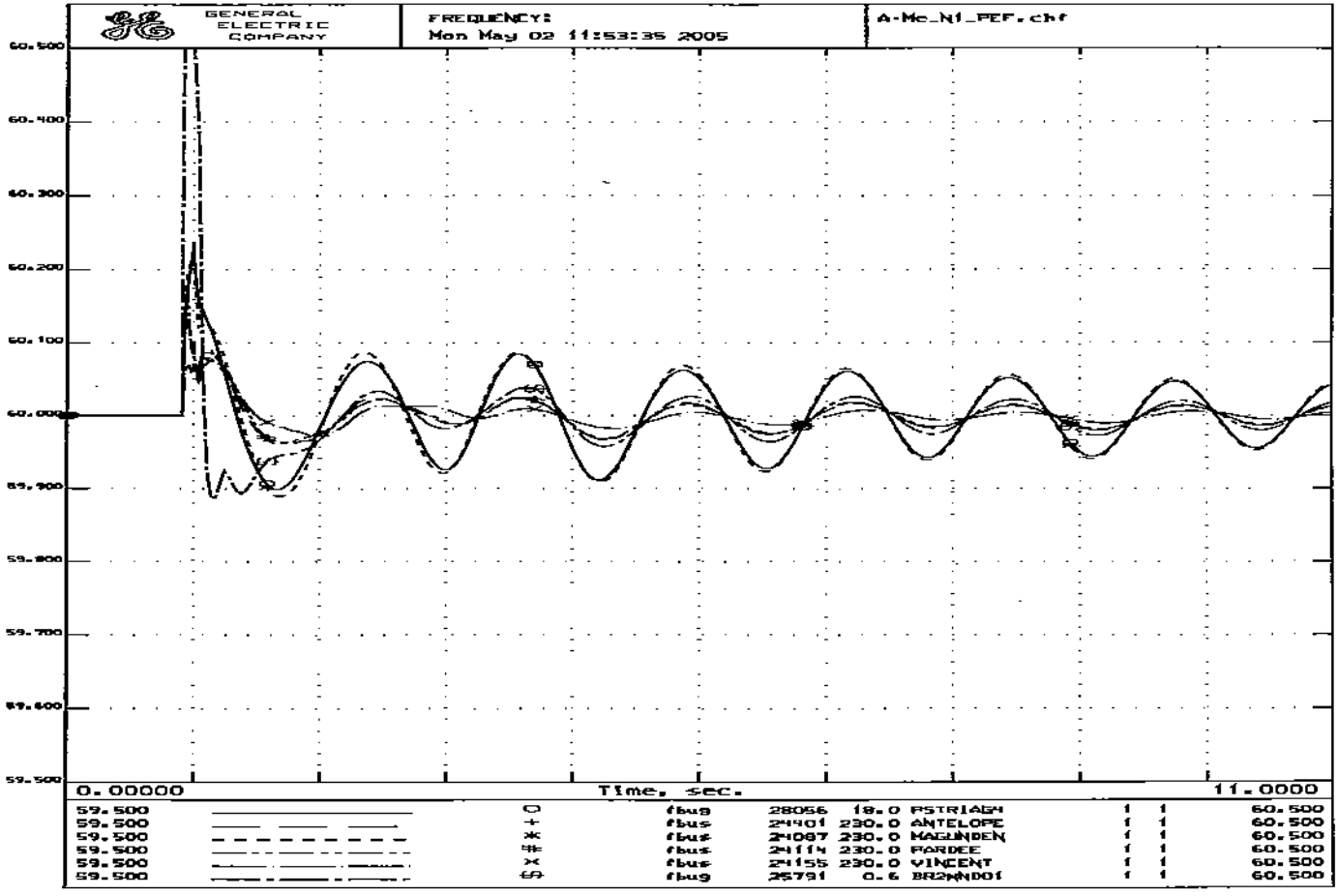
GENERAL ELECTRIC COMPANY
FREQUENCY:
Mon May 02 11:53:35 2005
A-Mc_N1_PEF.chf
60.500
60.400
60.300
60.200
60.100
60.000
59.900
59.800
59.700
59.600
59.500
0.00000
Time, sec.
11.0000
59.500 fbus 28056 18.0 ASTRIAGN 1 1 60.500
59.500 fbus 24401 230.0 ANTELOPE 1 1 60.500
59.500 fbus 24087 230.0 MAGUNDEN 1 1 60.500
59.500 fbus 24114 230.0 PARDEE 1 1 60.500
59.500 fbus 24155 230.0 VINCENT 1 1 60.500
59.500 fbus 25791 0.6 BR2NNDO1 1 1 60.500

```
PostPEF_High_SOM.sav
PostPEF.dyd
TITLE
Calpine Pastoria Add Stability Study: Loss of One 230-KV Line
6-CYCLE 3-Phase Fault at Antelope 230kV Bus
N-1 OUTAGE: Antelope-Pardee 230kV Line
SYSTEM STABILITY CASE - A-P_N1_PostPEF.swt
PostPEF_High_SOM.sav + PostPEF.dyd + A-P_N1_PostPEF.swt
RUN 10.0
CC
CC   ***CALPINE PASTORIA ADD DYNAMIC STABILITY ASSESSMENT***
CC   APPLY A 3-PHASE FAULT ON THE ANTELOPE 230-KV BUS
FB   0.0 "ANTELOPE" 230
CC
CC   CLEAR FAULT IN 6 CYCLES
CFB  6.0 "ANTELOPE" 230
CC
CC   REMOVE ANTELOPE-PARDEE 230-KV LINE
DL   6.0 "ANTELOPE" 230. "PARDEE   " 230. "1 "
```

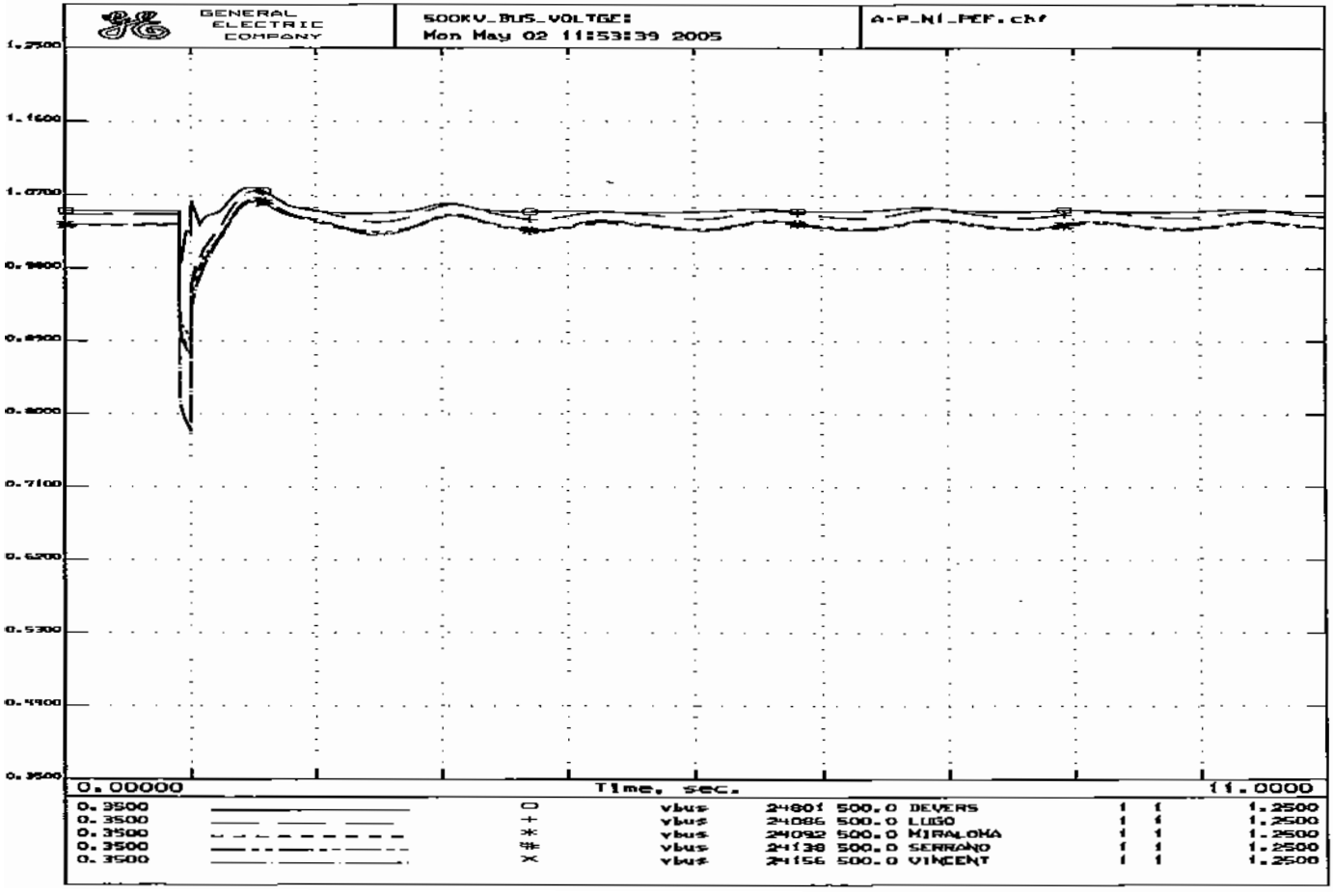
GENERAL ELECTRIC COMPANY
500KV_BUS_VOLTGE:
Mon May 02 11:53:39 2005
A-P_NI_PEF.chf
1.2500
1.1600
1.0700
0.9800
0.8900
0.8000
0.7100
0.6200
0.5300
0.4400
0.3500
0.00000
Time, sec.
11.0000
0.3500 ○ vbus 24001 500.0 DEVERS 1 1 1.2500
0.3500 + vbus 24086 500.0 LUGO 1 1 1.2500
0.3500 * vbus 24092 500.0 MIRALOMA 1 1 1.2500
0.3500 # vbus 24138 500.0 SERRANO 1 1 1.2500
0.3500 × vbus 24156 500.0 VINCENT 1 1 1.2500

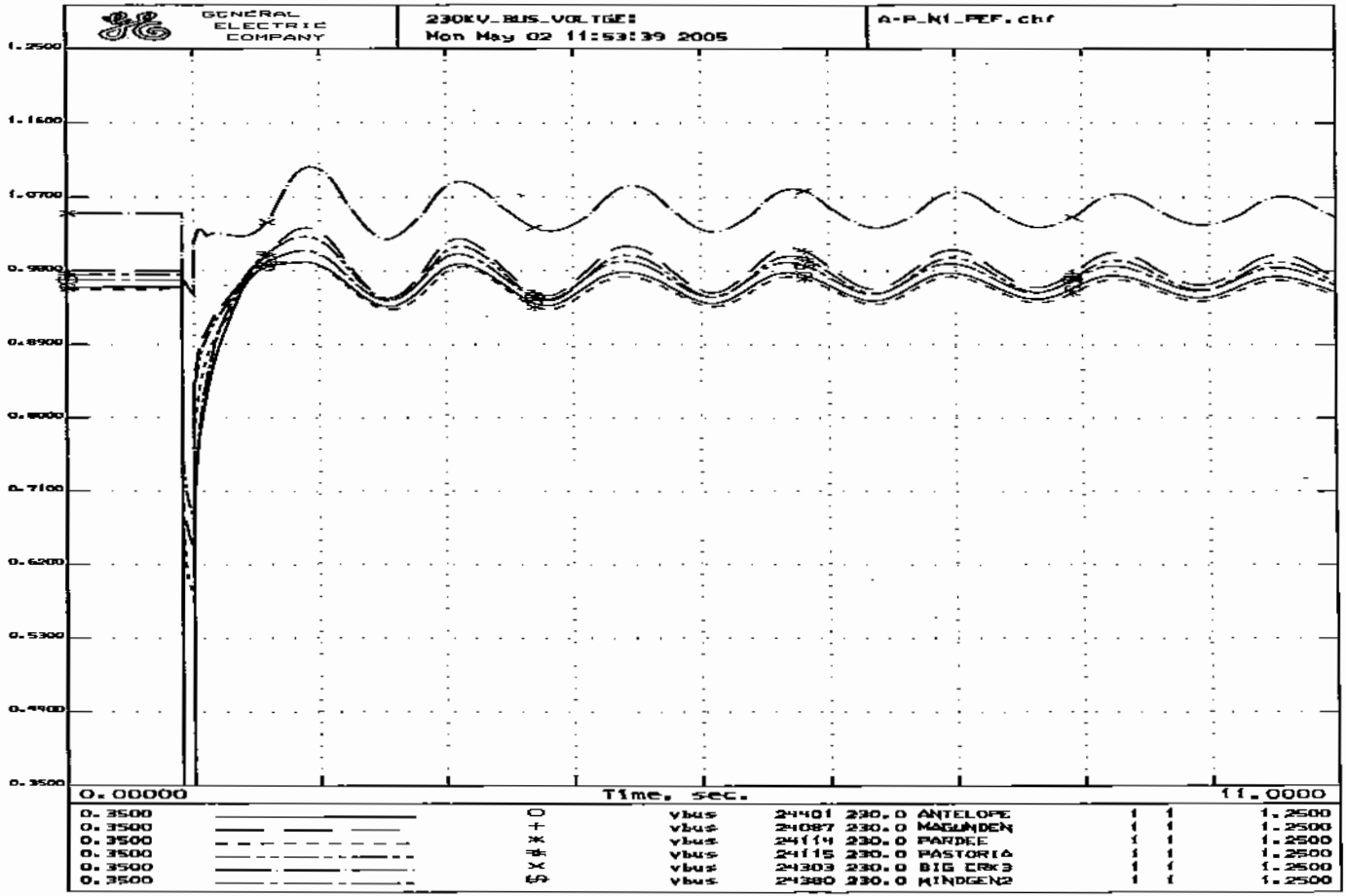
GENERAL ELECTRIC COMPANY
230KV_BUS_VOLTGE:
Mon May 02 11:53:39 2005
A-P_N1_PEF.chf
1.2500
1.1600
1.0700
0.9800
0.8900
0.8000
0.7100
0.6200
0.5300
0.4400
0.3500
0.00000
Time, sec.
11.0000
0.3500 O vbus 24401 230.0 ANTELOPE 1 1 1.2500
0.3500 + vbus 24087 230.0 MAGUNDEN 1 1 1.2500
0.3500 * vbus 24114 230.0 PARDEE 1 1 1.2500
0.3500 vbus 24115 230.0 PASTORIA 1 1 1.2500
0.3500 X vbus 24303 230.0 BIG CRK3 1 1 1.2500
0.3500 vbus 24380 230.0 MINDGEN2 1 1 1.2500

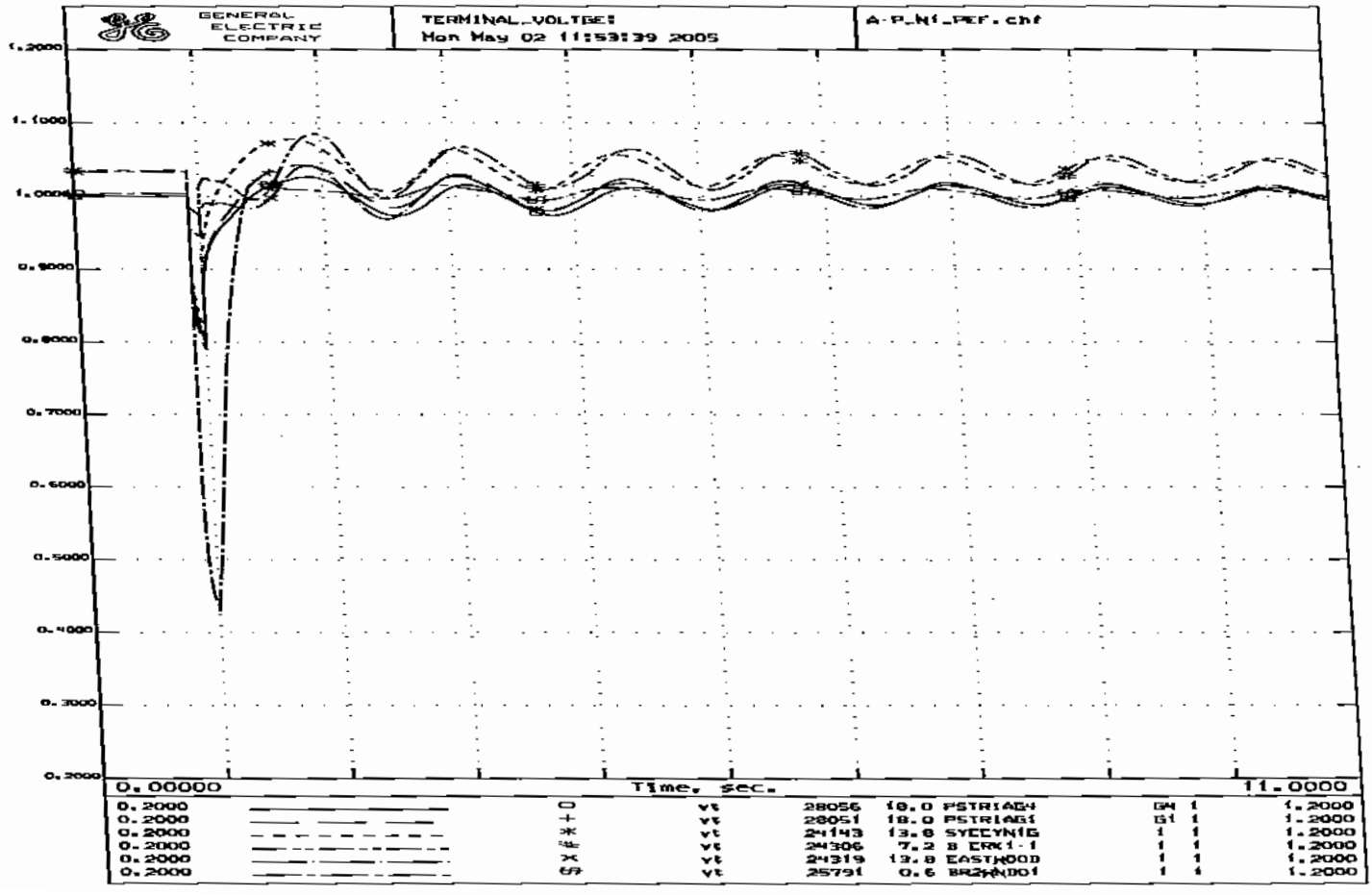
GENERAL ELECTRIC COMPANY
TERMINAL_VOLTGE:
Mon May 02 11:53:39 2005
A-P_N1_REF.chf
1.2000
1.1000
1.0000
0.9000
0.8000
0.7000
0.6000
0.5000
0.4000
0.3000
0.2000
0.00000
Time, sec.
11.0000
0.2000 ○ vt 28056 18.0 PSTRIAGH GN 1 1.2000
0.2000 + vt 28051 18.0 PSTRIAG1 G1 1 1.2000
0.2000 * vt 24143 13.8 SYCCYNIG 1 1 1.2000
0.2000 # vt 24306 7.2 B ERK1-1 1 1 1.2000
0.2000 × vt 24319 13.8 EASTWOOD 1 1 1.2000
0.2000 vt 25791 0.6 BRZHNDO1 1 1 1.2000

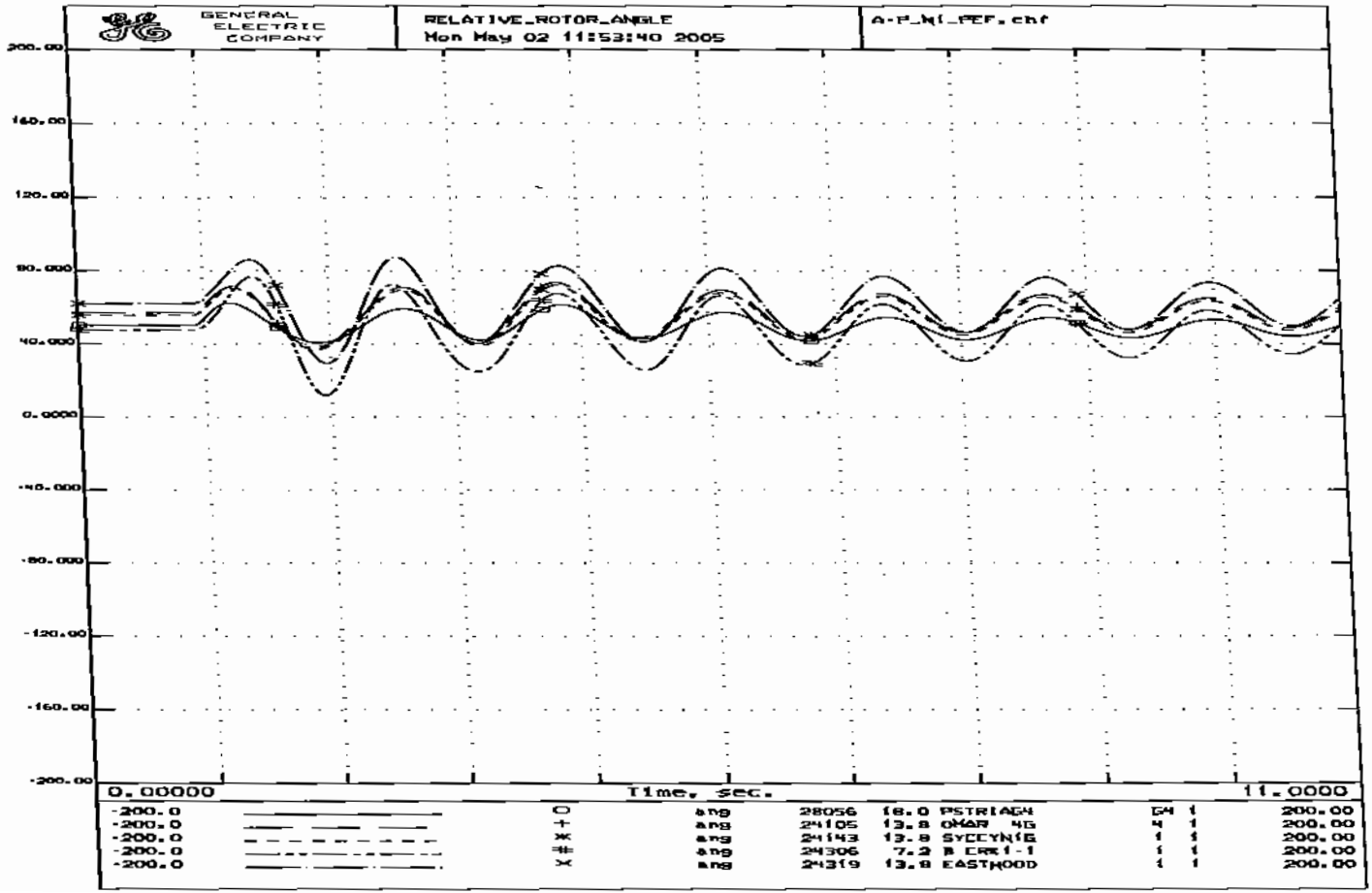
GENERAL ELECTRIC COMPANY
RELATIVE_ROTOR_ANGLE
Mon May 02 11:53:40 2005
A-P_N1_PEF.chf
200.00
160.00
120.00
80.000
40.000
0.0000
-40.000
-80.000
-120.00
-160.00
-200.00
0.00000
Time, sec.
11.0000
-200.0 ang 28056 18.0 PSTRIAGN G4 1 200.00
-200.0 ang 24105 13.8 OMAR 4G 4 1 200.00
-200.0 ang 24143 13.8 SYCCYNIE 1 1 200.00
-200.0 ang 24306 7.2 B ERR1-1 1 1 200.00
-200.0 ang 24319 13.8 EASTWOOD 1 1 200.00

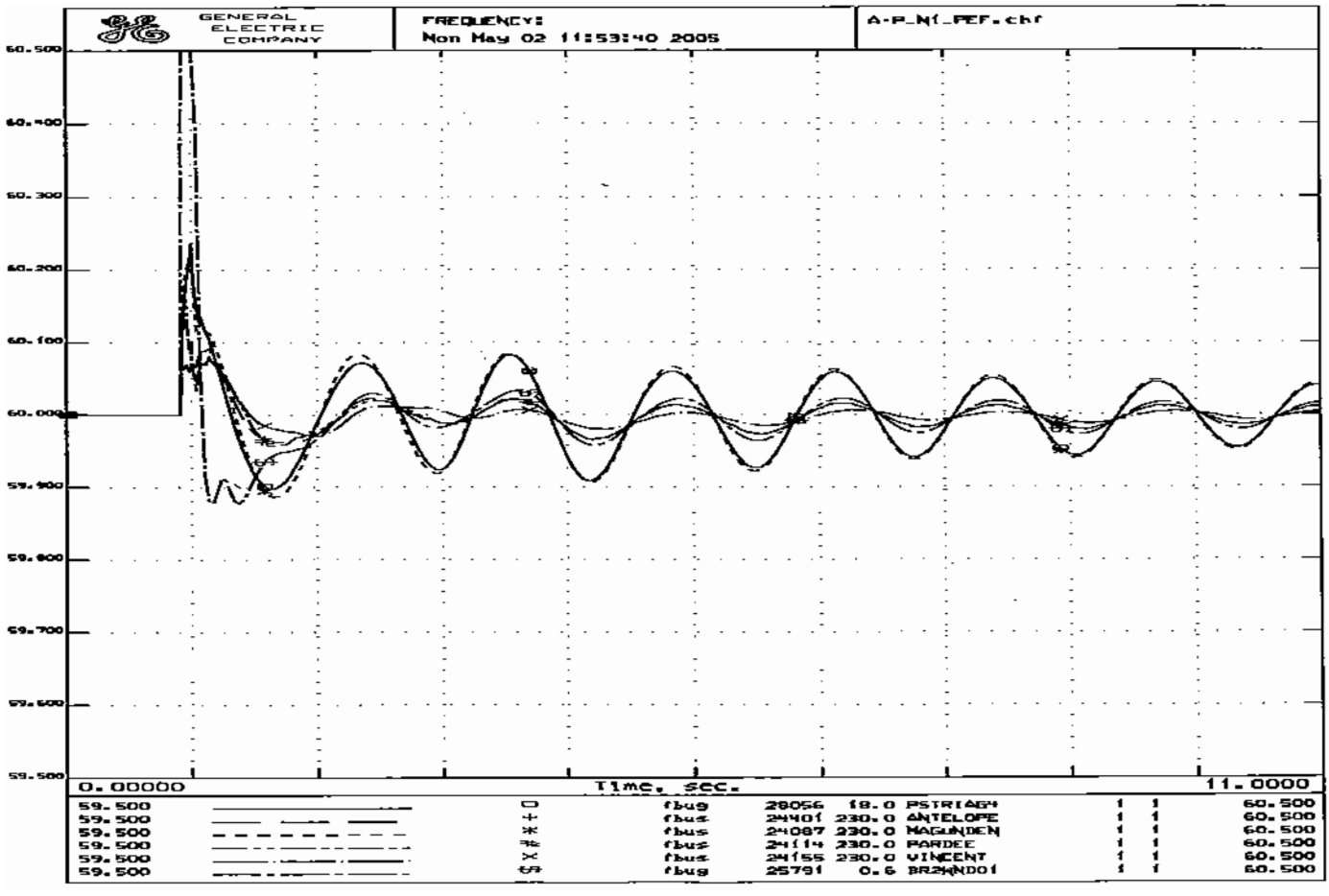
GENERAL ELECTRIC COMPANY
FREQUENCY:
Mon May 02 11:53:40 2005
A-P_N1_PEF.chf
60.500
60.400
60.300
60.200
60.100
60.000
59.900
59.800
59.700
59.600
59.500
0.00000
Time, sec.
11.0000
59.500 □ fbus 28056 18.0 PSTRIAG4 1 1 60.500
59.500 + fbus 24401 230.0 ANTELOPE 1 1 60.500
59.500 * fbus 24087 230.0 MAGUNDEN 1 1 60.500
59.500 * fbus 24114 230.0 PARDEE 1 1 60.500
59.500 X fbus 24155 230.0 VINCENT 1 1 60.500
59.500 fbus 25791 0.6 BRAWNDO1 1 1 60.500

```
PostPEF_High_SOM.sav
PostPEF.dyd
TITLE
Calpine Pastoria Add Stability Study: Loss of One 230-KV Line
6-CYCLE 3-Phase Fault at Antelope 230kV Bus
N-1 OUTAGE: New Vincent-Antelope 230kV Line
SYSTEM STABILITY CASE - A-V_N1_PostPEF.swt
PostPEF_High_SOM.sav + PostPEF.dyd + A-V_N1_PostPEF.swt
RUN 10.0
CC
CC   ***CALPINE PASTORIA ADD DYNAMIC STABILITY ASSESSMENT***
CC   APPLY A 3-PHASE FAULT ON THE ANTELOPE 230-KV BUS
FB   0.0 "ANTELOPE" 230
CC
CC   CLEAR FAULT IN 6 CYCLES
CFB  6.0 "ANTELOPE" 230
CC
CC   REMOVE NEW VINCENT-ANTELOPE 230-KV LINE
DL   6.0 "VINCENT " 230. "ANTELOPE" 230. "2 "
```

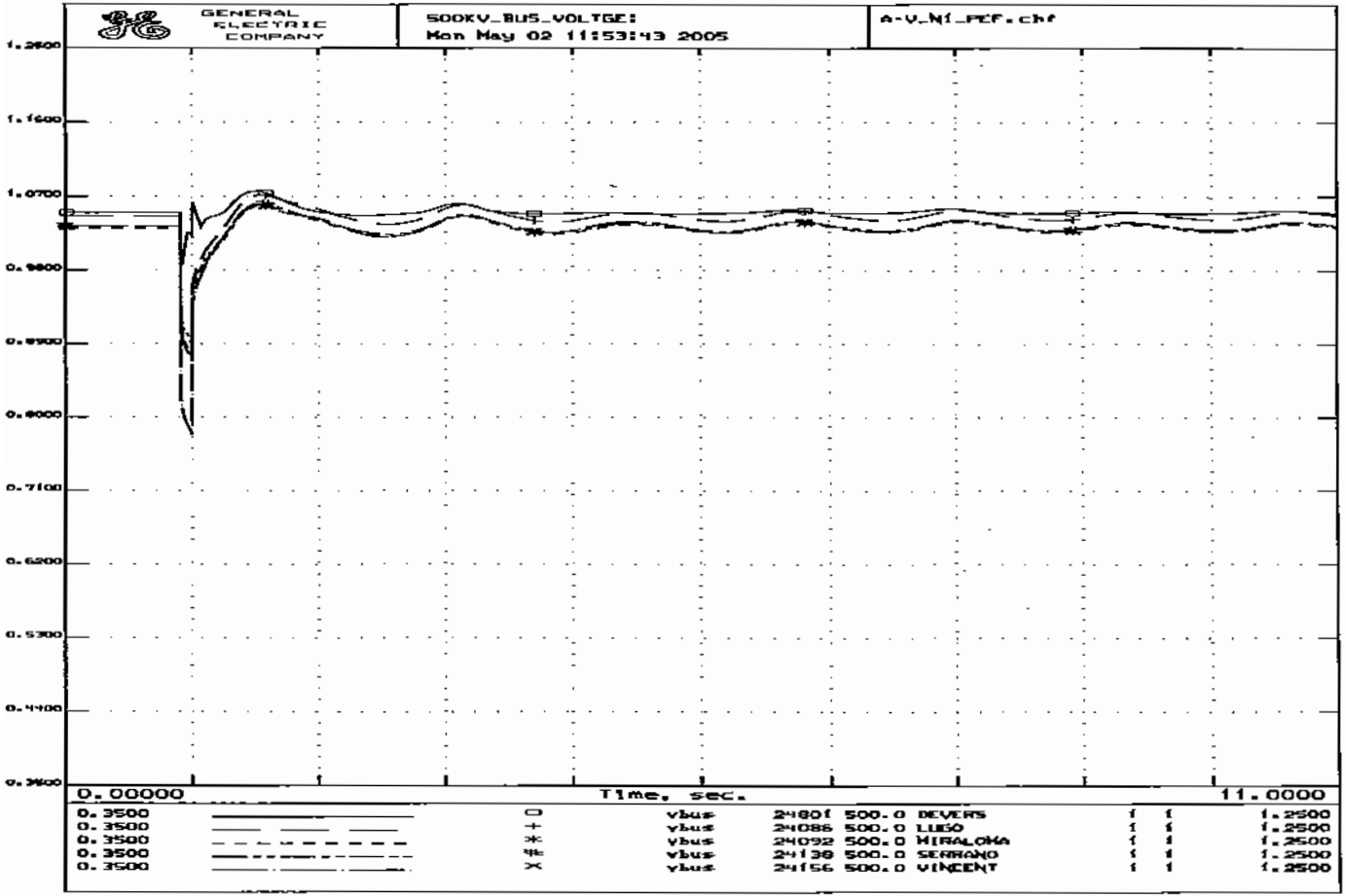
GENERAL ELECTRIC COMPANY
500KV_BUS_VOLTGE:
Mon May 02 11:53:43 2005
A-V_N1_PEF.chf
1.2800
1.1600
1.0700
0.9800
0.8900
0.8000
0.7100
0.6200
0.5300
0.4400
0.3500
0.00000
Time, sec.
11.0000
0.3500 ○ vbus 24801 500.0 DEVERS 1 1 1.2500
0.3500 + vbus 24086 500.0 LUGO 1 1 1.2500
0.3500 * vbus 24092 500.0 MIRALOMA 1 1 1.2500
0.3500 * vbus 24130 500.0 SERRANO 1 1 1.2500
0.3500 × vbus 24156 500.0 VINCENT 1 1 1.2500

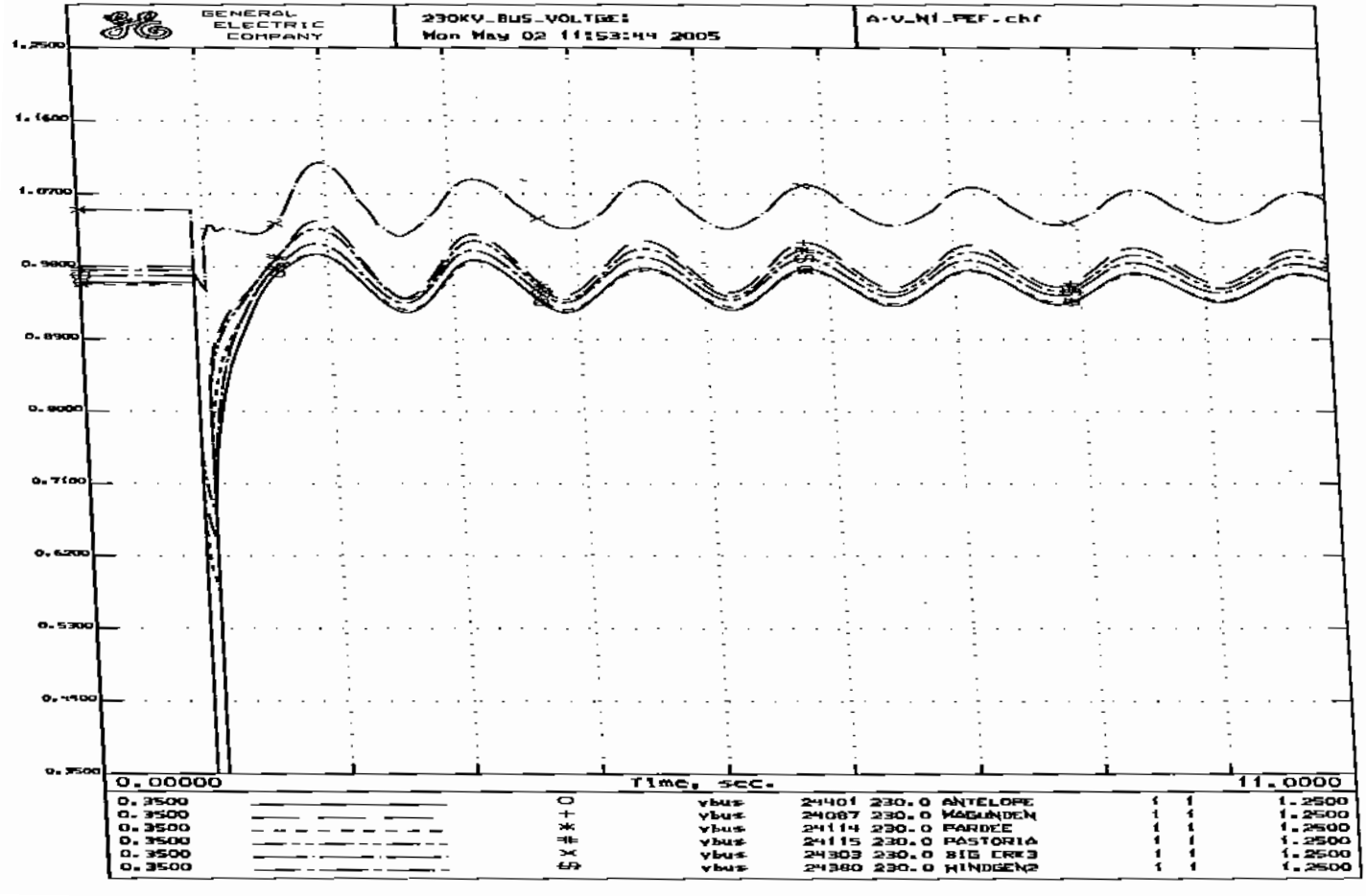
GENERAL ELECTRIC COMPANY
230KV_BUS_VOLTAGE:
Mon May 02 11:53:44 2005
A-V_N1_PEF.chf
1.2500
1.1600
1.0700
0.9800
0.8900
0.8000
0.7100
0.6200
0.5300
0.4400
0.3500
0.00000
Time, sec.
11.0000
0.3500 ○ vbus 24401 230.0 ANTELOPE 1 1 1.2500
0.3500 + vbus 24087 230.0 MAGUNDEN 1 1 1.2500
0.3500 ✳ vbus 24114 230.0 PARDEE 1 1 1.2500
0.3500 vbus 24115 230.0 PASTORIA 1 1 1.2500
0.3500 × vbus 24303 230.0 BIG CREE 1 1 1.2500
0.3500 vbus 24380 230.0 HINDGEN2 1 1 1.2500

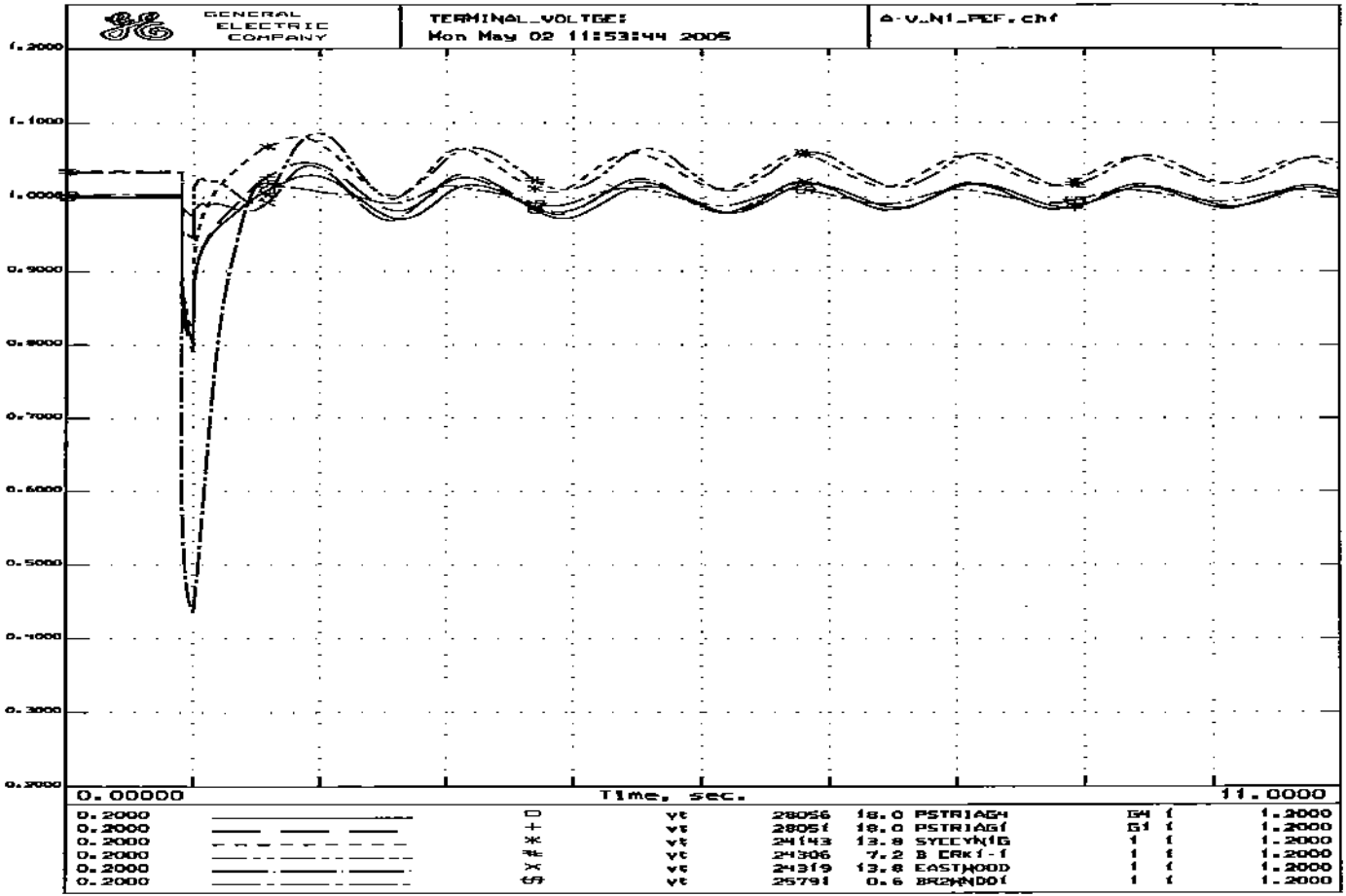
GENERAL ELECTRIC COMPANY
TERMINAL_VOLTGE:
Mon May 02 11:53:44 2005
A-V_N1_REF.chf
1.2000
1.1000
1.0000
0.9000
0.8000
0.7000
0.6000
0.5000
0.4000
0.3000
0.2000
0.00000
Time, sec.
11.0000
0.2000 □ vt 28056 18.0 PSTRIAG4 G4 1 1.2000
0.2000 + vt 28051 18.0 PSTRIAG1 G1 1 1.2000
0.2000 * vt 24143 13.8 SYCCYN1G 1 1 1.2000
0.2000 vt 24306 7.2 B ERK1-1 1 1 1.2000
0.2000 × vt 24319 13.8 EASTWOOD 1 1 1.2000
0.2000 vt 25791 0.6 BRWNDO1 1 1 1.2000

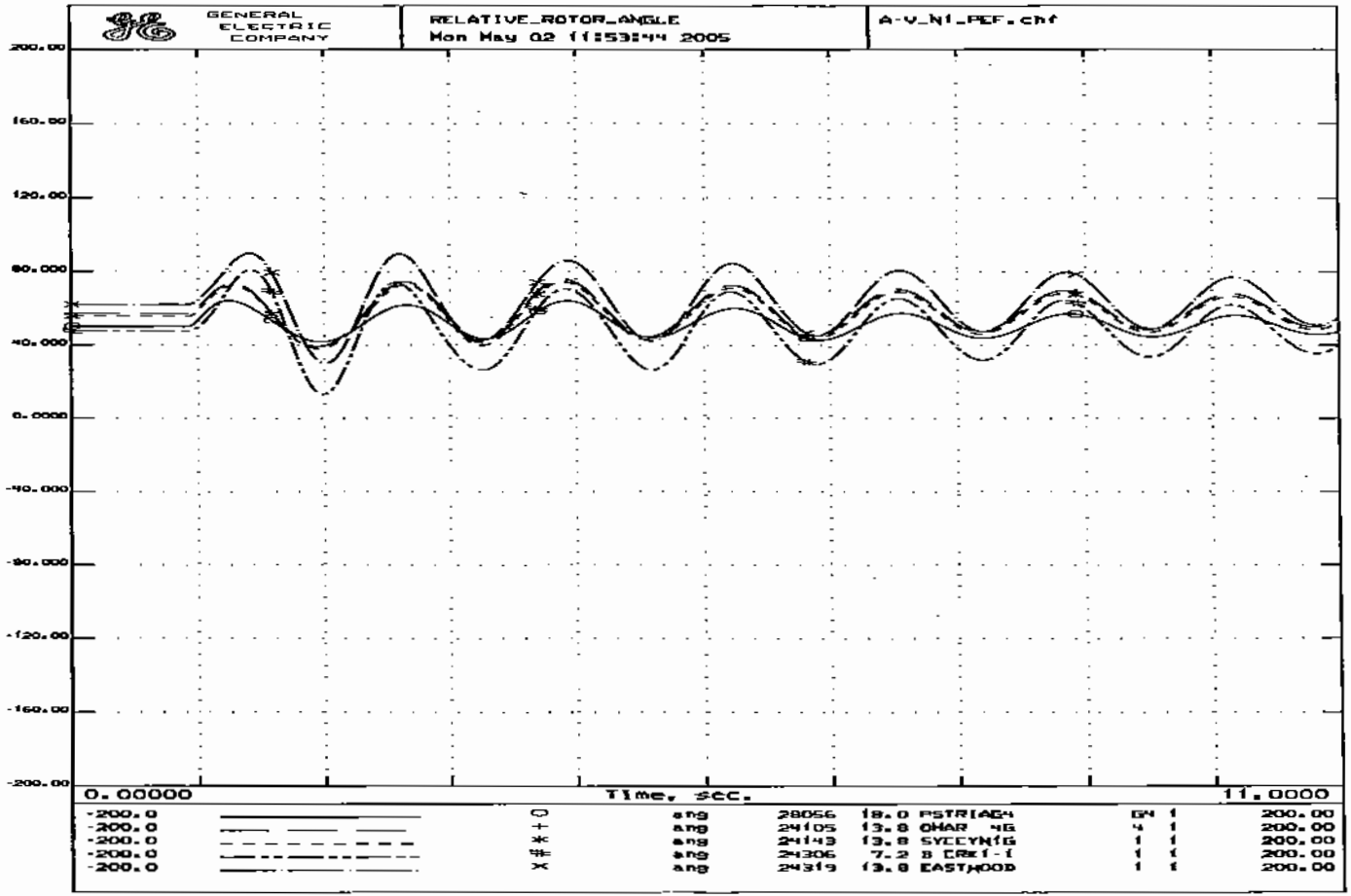
GENERAL ELECTRIC COMPANY
RELATIVE_ROTOR_ANGLE
Mon May 02 11:53:44 2005
A-V_N1_PEF.chf
200.00
160.00
120.00
80.000
40.000
0.0000
-40.000
-80.000
-120.00
-160.00
-200.00
0.00000
Time, sec.
11.0000
-200.0 ang 28056 18.0 PSTRIAG4 G4 1 200.00
-200.0 ang 24105 13.8 OHAR NG 4 1 200.00
-200.0 ang 24143 13.8 SYCEYN1G 1 1 200.00
-200.0 ang 24306 7.2 B CRE1-1 1 1 200.00
-200.0 ang 24319 13.8 EASTWOOD 1 1 200.00

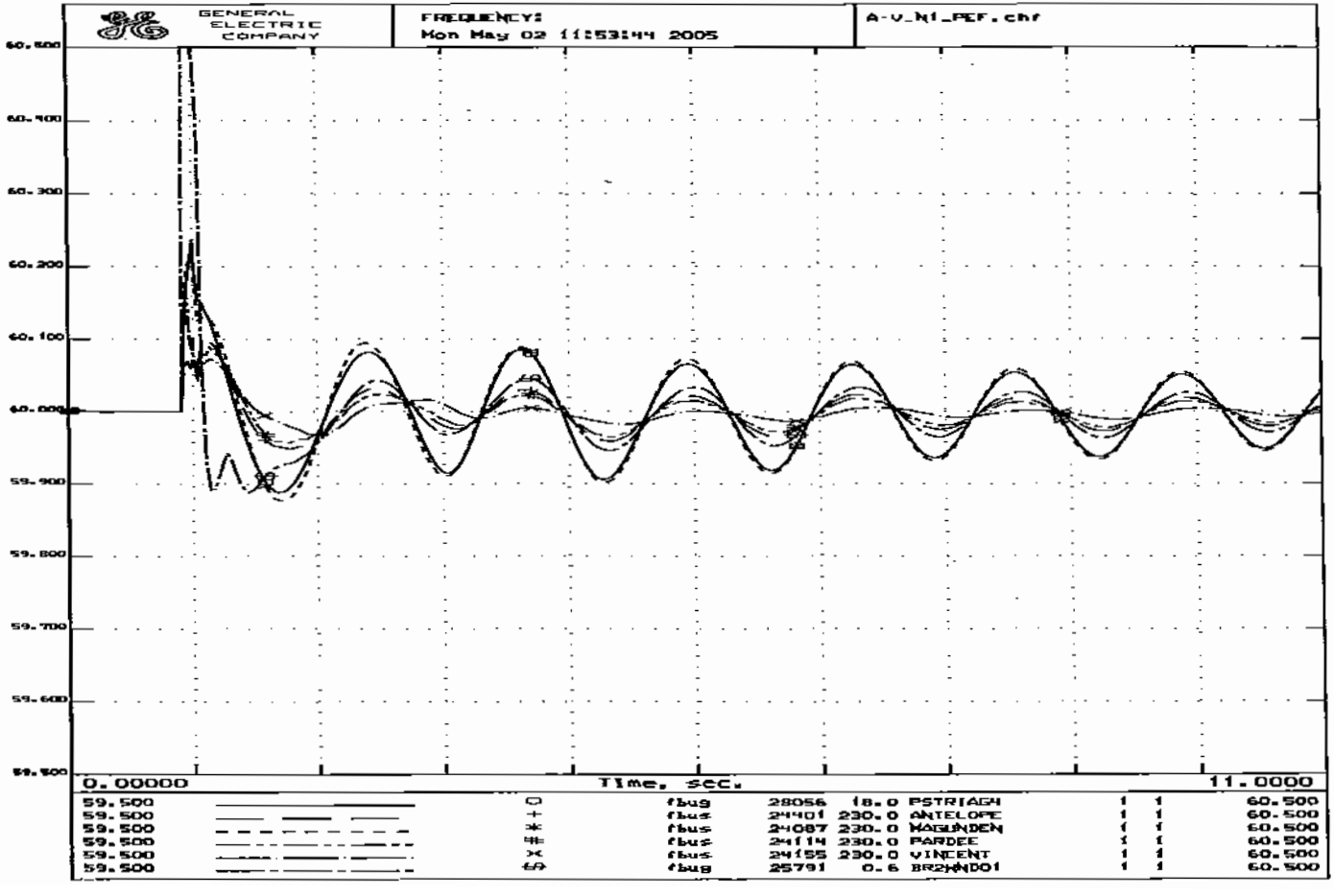
GENERAL ELECTRIC COMPANY
FREQUENCY:
Mon May 02 11:53:44 2005
A-V_N1_PEF.chf
60.500
60.400
60.300
60.200
60.100
60.000
59.900
59.800
59.700
59.600
59.500
0.00000
Time, sec.
11.0000
59.500 ○ fbus 28056 18.0 PSTRIAGH 1 1 60.500
59.500 + fbus 24401 230.0 ANTELOPE 1 1 60.500
59.500 * fbus 24087 230.0 WAGUNDEN 1 1 60.500
59.500 # fbus 24114 230.0 PARDEE 1 1 60.500
59.500 × fbus 24155 230.0 VINCENT 1 1 60.500
59.500 ◇ fbus 25791 0.6 BR2HNDO1 1 1 60.500

```
PostPEF_High_SOM.sav
PostPEF.dyd
TITLE
Calpine Pastoria Add Stability Study: Loss of One 230-KV Line
6-CYCLE 3-Phase Fault at Antelope 230kV Bus
N-1 OUTAGE: Magunden-Windgen2 230kV Line
SYSTEM STABILITY CASE - A-W2_N1_PostPEF.swt
PostPEF_High_SOM.sav + postPEF.dyd + A-W2_N1_PostPEF.swt
RUN 10.0
CC
CC   ***CALPINE PASTORIA ADD DYNAMIC STABILITY ASSESSMENT***
CC   APPLY A 3-PHASE FAULT ON THE ANTELOPE 230-KV BUS
FB   0.0 "ANTELOPE" 230
CC
CC   CLEAR FAULT IN 6 CYCLES
CFB  6.0 "ANTELOPE" 230
CC
CC   REMOVE ANTELOPE-WINDGEN2 230-KV LINE
DL   6.0 "MAGUNDEN" 230. "WINDGEN2" 230. "1 "
```

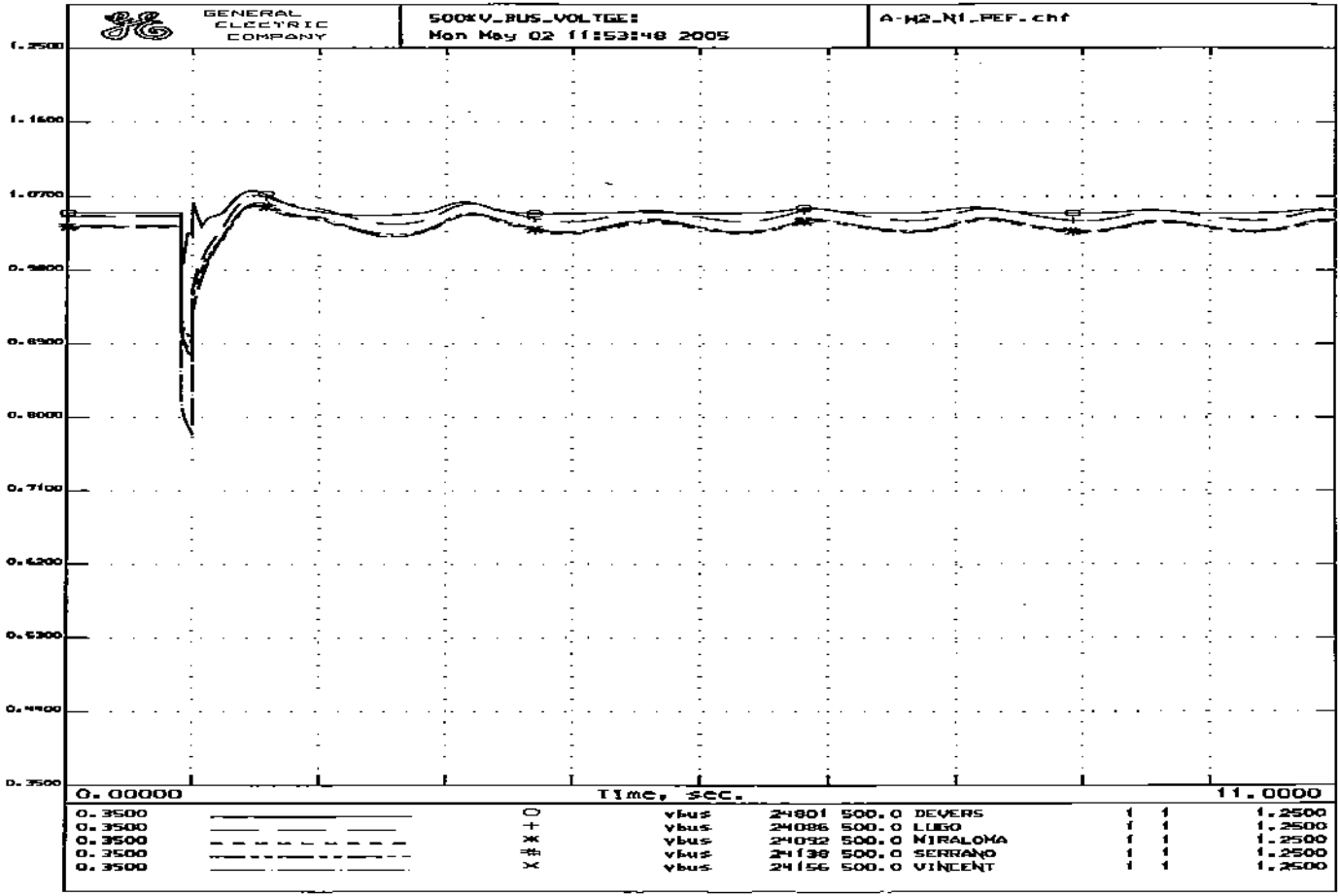
GENERAL ELECTRIC COMPANY
500KV_BUS_VOLTGE:
Mon May 02 11:53:48 2005
A-W2_N1_PEF.chf
1.2500
1.1500
1.0700
0.9800
0.8900
0.8000
0.7100
0.6200
0.5300
0.4400
0.3500
0.00000
Time, sec.
11.0000
0.3500 ○ vbus 24801 500.0 DEVERS 1 1 1.2500
0.3500 + vbus 24086 500.0 LUGO 1 1 1.2500
0.3500 ✱ vbus 24092 500.0 MIRALOMA 1 1 1.2500
0.3500 # vbus 24138 500.0 SERRANO 1 1 1.2500
0.3500 × vbus 24156 500.0 VINCENT 1 1 1.2500

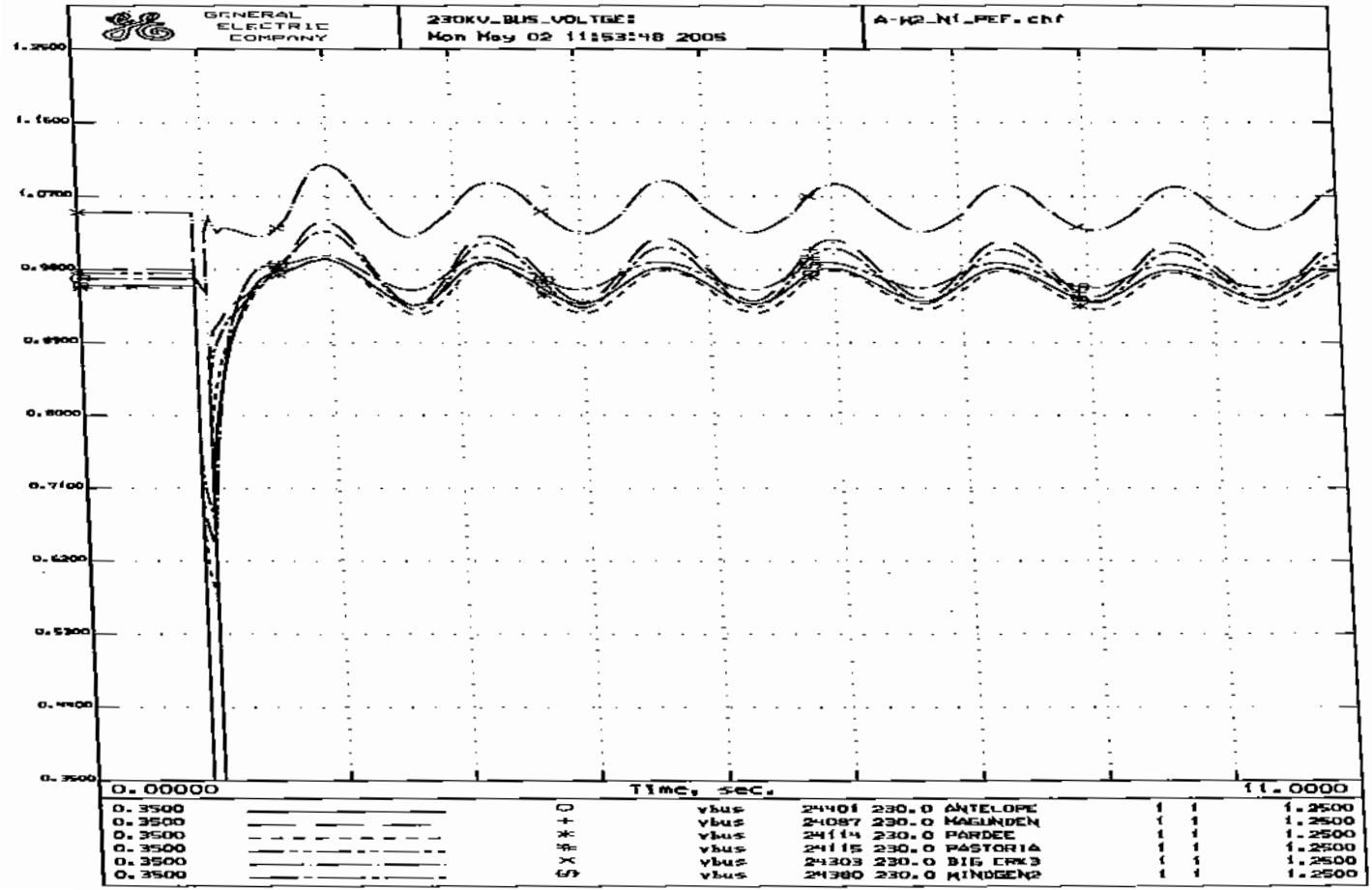
GENERAL ELECTRIC COMPANY
230KV_BUS_VOLTGE:
Mon May 02 11:53:48 2005
A-H2_N1_PEF.chf
1.2500
1.1500
1.0500
0.9500
0.8500
0.7500
0.6500
0.5500
0.4500
0.3500
0.00000
Time, sec.
11.0000
0.3500 vbus 24401 230.0 ANTELOPE 1 1 1.2500
0.3500 vbus 24087 230.0 MAGUNDEN 1 1 1.2500
0.3500 vbus 24114 230.0 PARDEE 1 1 1.2500
0.3500 vbus 24115 230.0 PASTORIA 1 1 1.2500
0.3500 vbus 24303 230.0 BIG CRK3 1 1 1.2500
0.3500 vbus 24380 230.0 MINDGEN2 1 1 1.2500

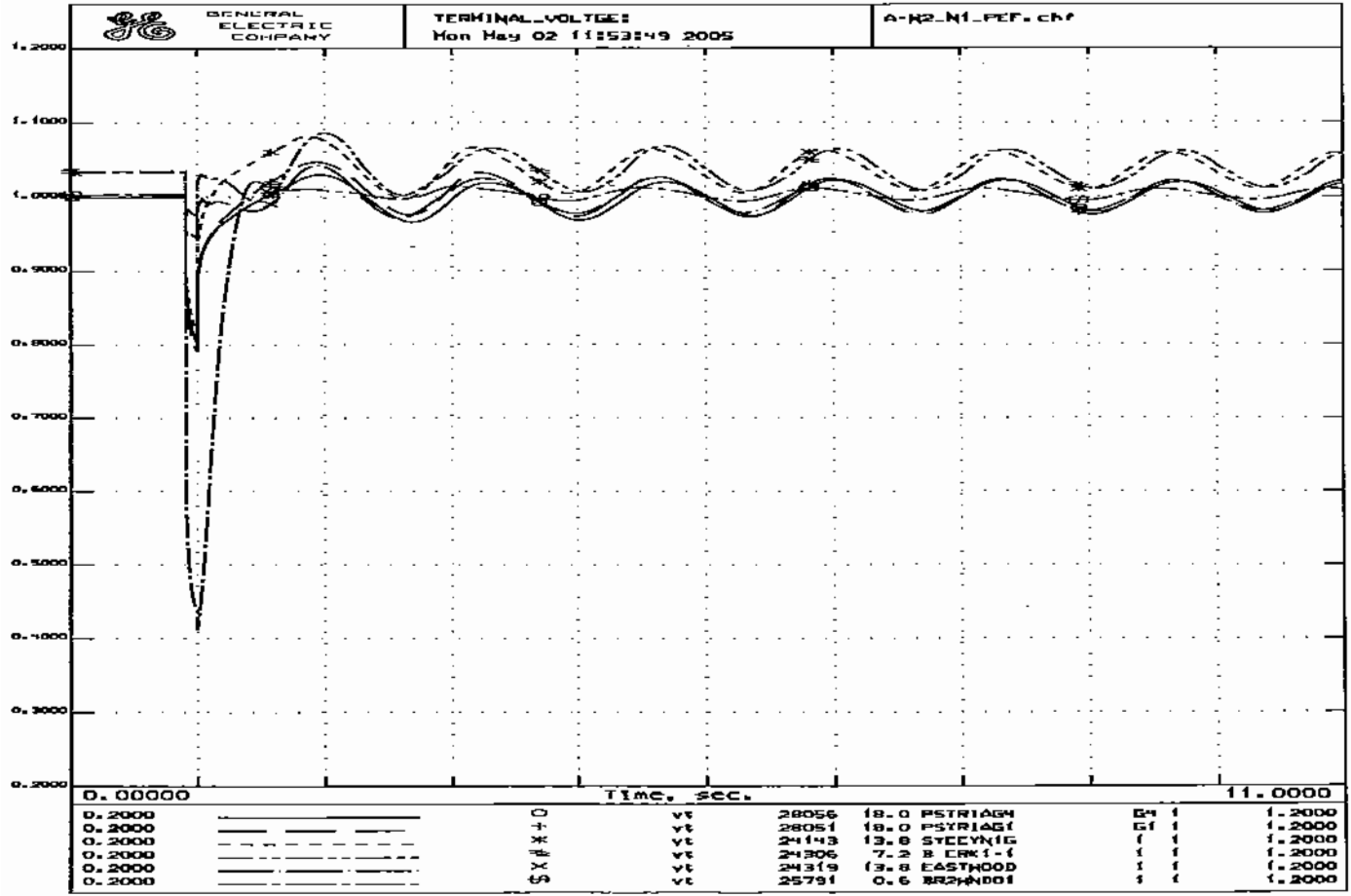
GENERAL ELECTRIC COMPANY
TERMINAL_VOLTGE:
Mon May 02 11:53:49 2005
A-N2_N1_PEF.chf
1.2000
1.1000
1.0000
0.9000
0.8000
0.7000
0.6000
0.5000
0.4000
0.3000
0.2000
0.00000
Time, sec.
11.0000
0.2000 ○ vt 28056 18.0 PSTRIAGM G4 1 1.2000
0.2000 + vt 28051 18.0 PSTRIAG1 G1 1 1.2000
0.2000 * vt 24143 13.8 STEEYN1G 1 1 1.2000
0.2000 vt 24306 7.2 B ERK1-1 1 1 1.2000
0.2000 X vt 24319 13.8 EASTWOOD 1 1 1.2000
0.2000 vt 25791 0.6 BR2HN001 1 1 1.2000

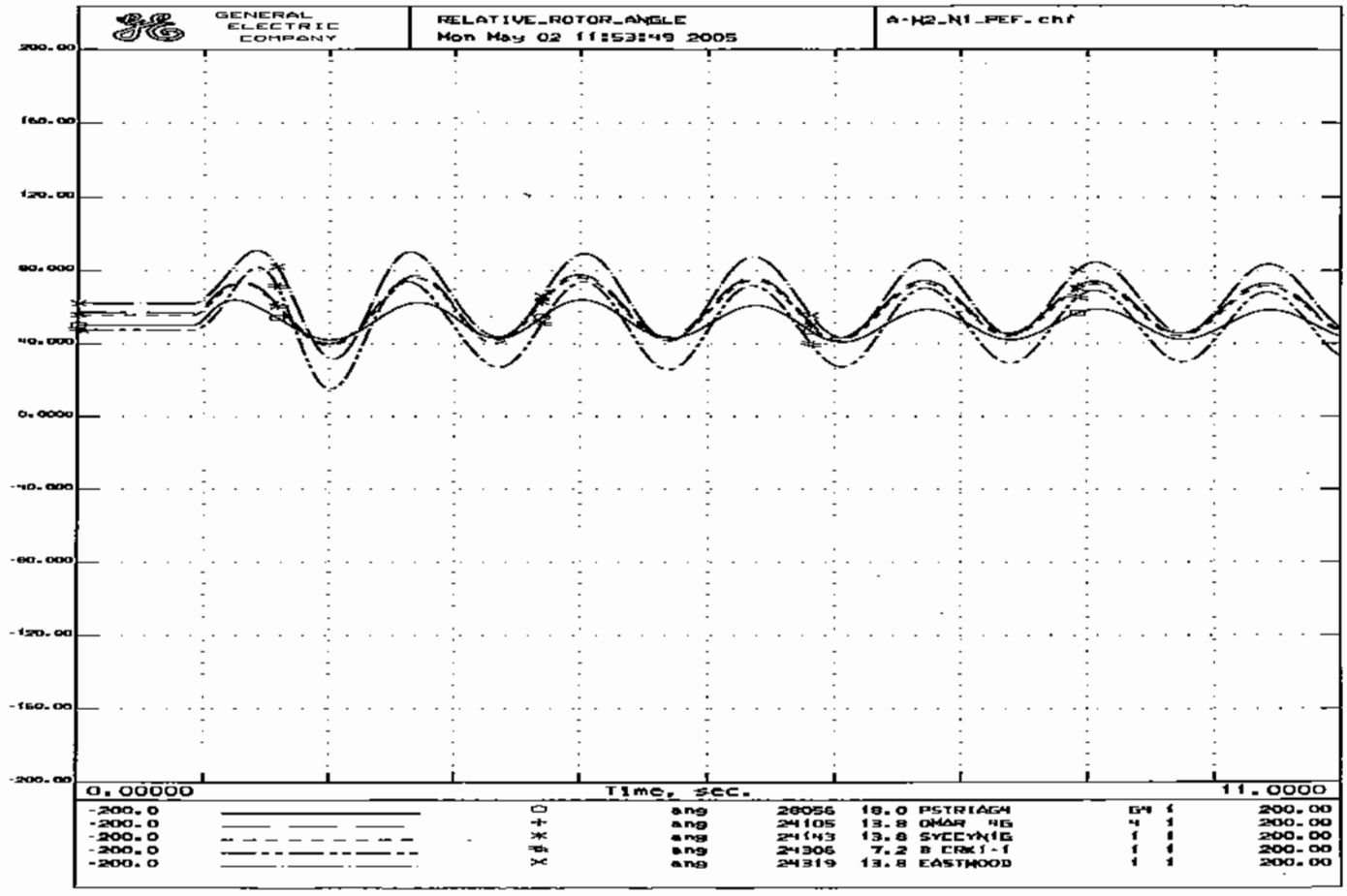
GENERAL ELECTRIC COMPANY
RELATIVE_ROTOR_ANGLE
Mon May 02 11:53:49 2005
A-H2_N1_PEF.chf
200.00
160.00
120.00
80.000
40.000
0.0000
-40.000
-80.000
-120.00
-160.00
-200.00
0.00000
Time, sec.
11.0000
-200.0 ang 28056 18.0 PSTRIAGM G4 1 200.00
-200.0 ang 24105 13.8 OMAR 4G 4 1 200.00
-200.0 ang 24143 13.8 SYCCYN1G 1 1 200.00
-200.0 ang 24306 7.2 B CRK1-1 1 1 200.00
-200.0 ang 24319 13.8 EASTWOOD 1 1 200.00

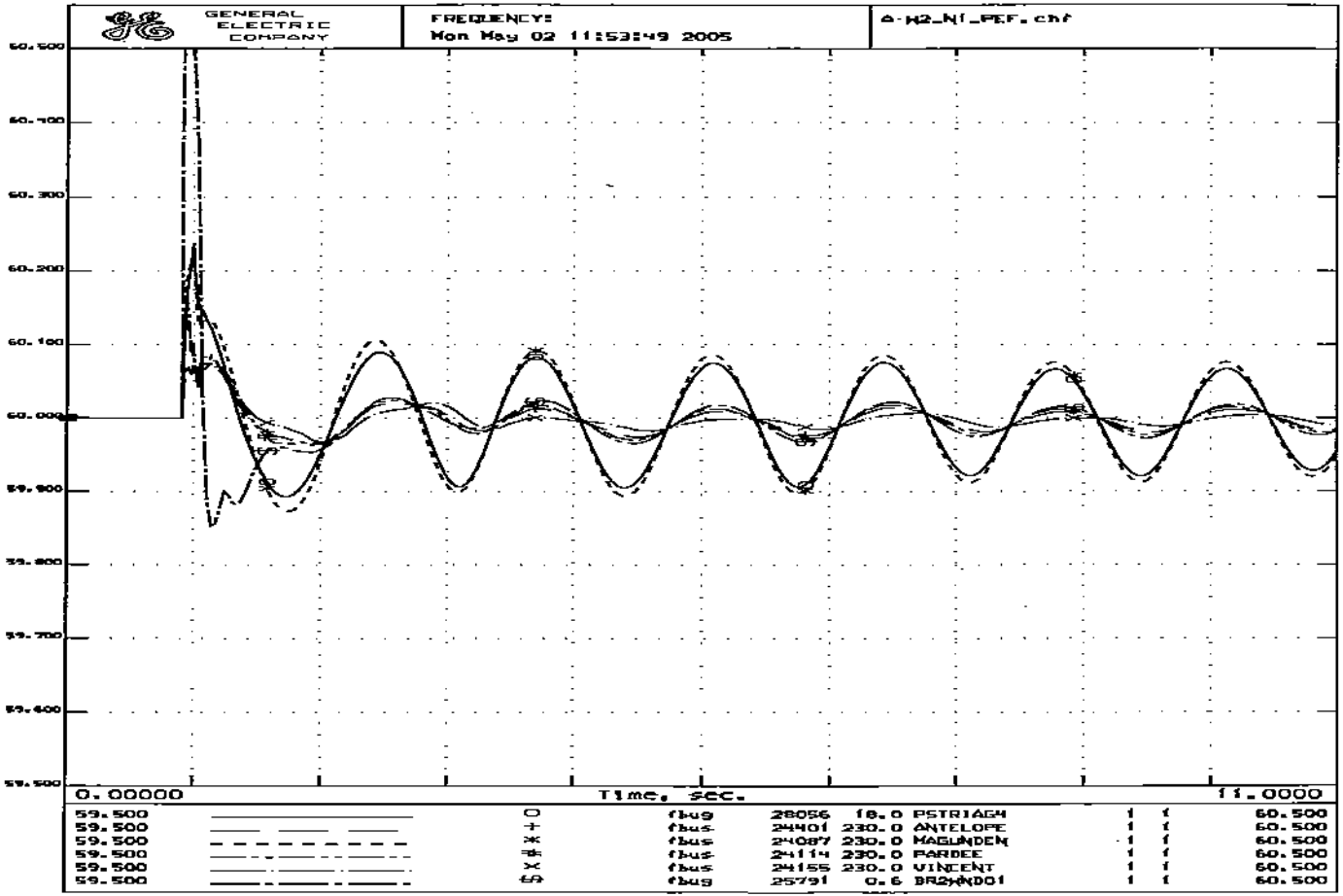
GENERAL ELECTRIC COMPANY
FREQUENCY:
Mon May 02 11:53:49 2005
A-W2_N1_PEF.chf
60.500
60.400
60.300
60.200
60.100
60.000
59.900
59.800
59.700
59.600
59.500
0.00000
Time, sec.
11.0000
59.500 ○ fbus 28056 18.0 PSTRIAGM 1 1 60.500
59.500 + fbus 24401 230.0 ANTELOPE 1 1 60.500
59.500 * fbus 24087 230.0 MAGUNDEN 1 1 60.500
59.500 # fbus 24114 230.0 PARDEE 1 1 60.500
59.500 x fbus 24155 230.0 VINCENT 1 1 60.500
59.500 fbus 25791 0.6 BR2WND01 1 1 60.500

```
PostPEF_High_SOM.sav
PostPEF.dyd
TITLE
Calpine Pastoria Add Stability Study: Loss of One 230-KV Line
6-CYCLE 3-Phase Fault at Bailey 230kV Bus
N-1 OUTAGE: Bailey-Pastoria 230kV Line
SYSTEM STABILITY CASE - B-Pas_N1_PostPEF.swt
PostPEF_High_SOM.sav + PostPEF.dyd + B-Pas_N1_PostPEF.swt
RUN 10.0
CC
CC   ***CALPINE PASTORIA ADD DYNAMIC STABILITY ASSESSMENT***
CC   APPLY A 3-PHASE FAULT ON THE BAILEY 230-KV BUS
FB   0.0 "BAILEY   " 230
CC
CC   CLEAR FAULT IN 6 CYCLES
CFB  6.0 "BAILEY   " 230
CC
CC   REMOVE BAILEY-PASTORIA 230-KV LINE
DL   6.0 "BAILEY   " 230. "PASTORIA" 230. "1 "
```

GENERAL ELECTRIC COMPANY

500KV_BUS_VOLTGE:
Mon May 02 11:53:53 2005

B-Pas_N1_PEF.chf

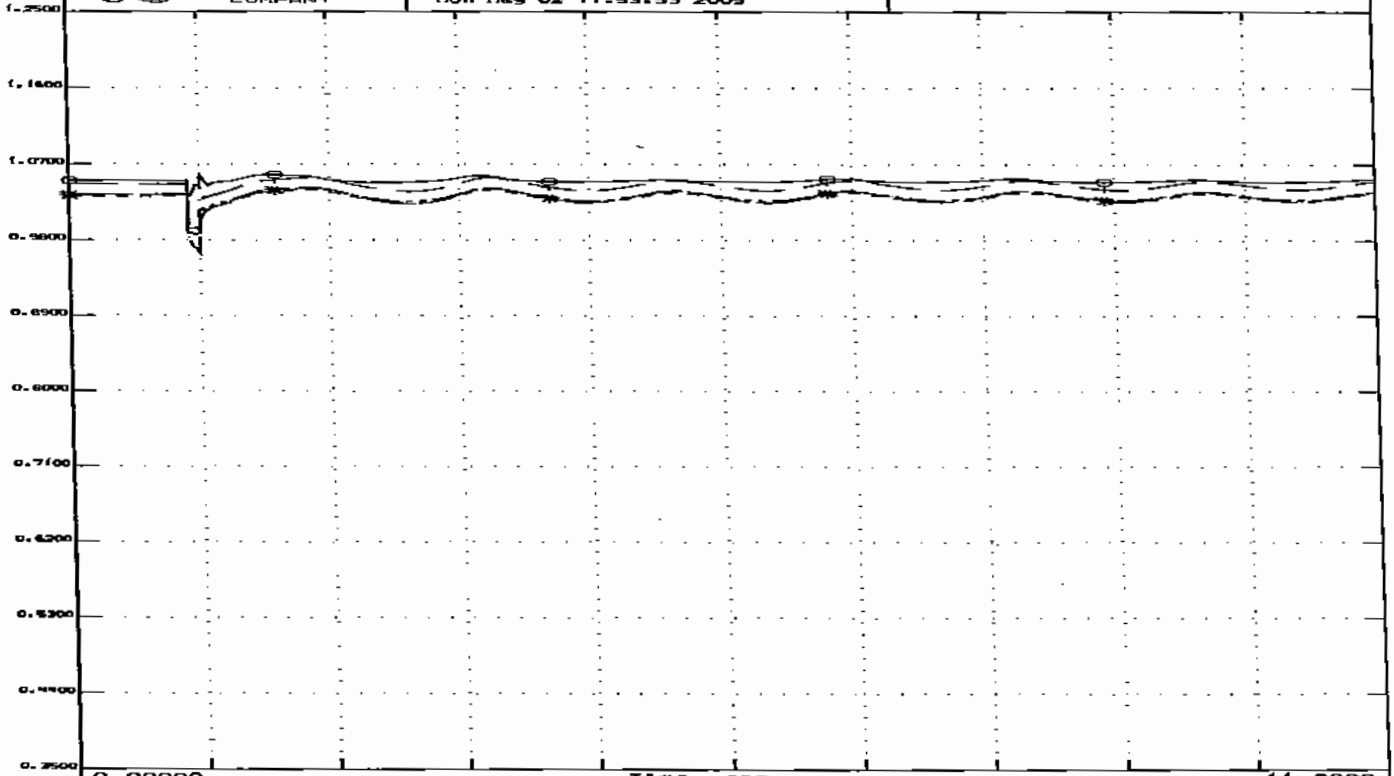

0.3500	○	vbus	24801	500.0	DEVERS	1	1	1.2500
0.3500	+	vbus	24086	500.0	LUGO	1	1	1.2500
0.3500	*	vbus	24092	500.0	MIRALOMA	1	1	1.2500
0.3500	#	vbus	24138	500.0	SERRANO	1	1	1.2500
0.3500	×	vbus	24156	500.0	VINCENT	1	1	1.2500

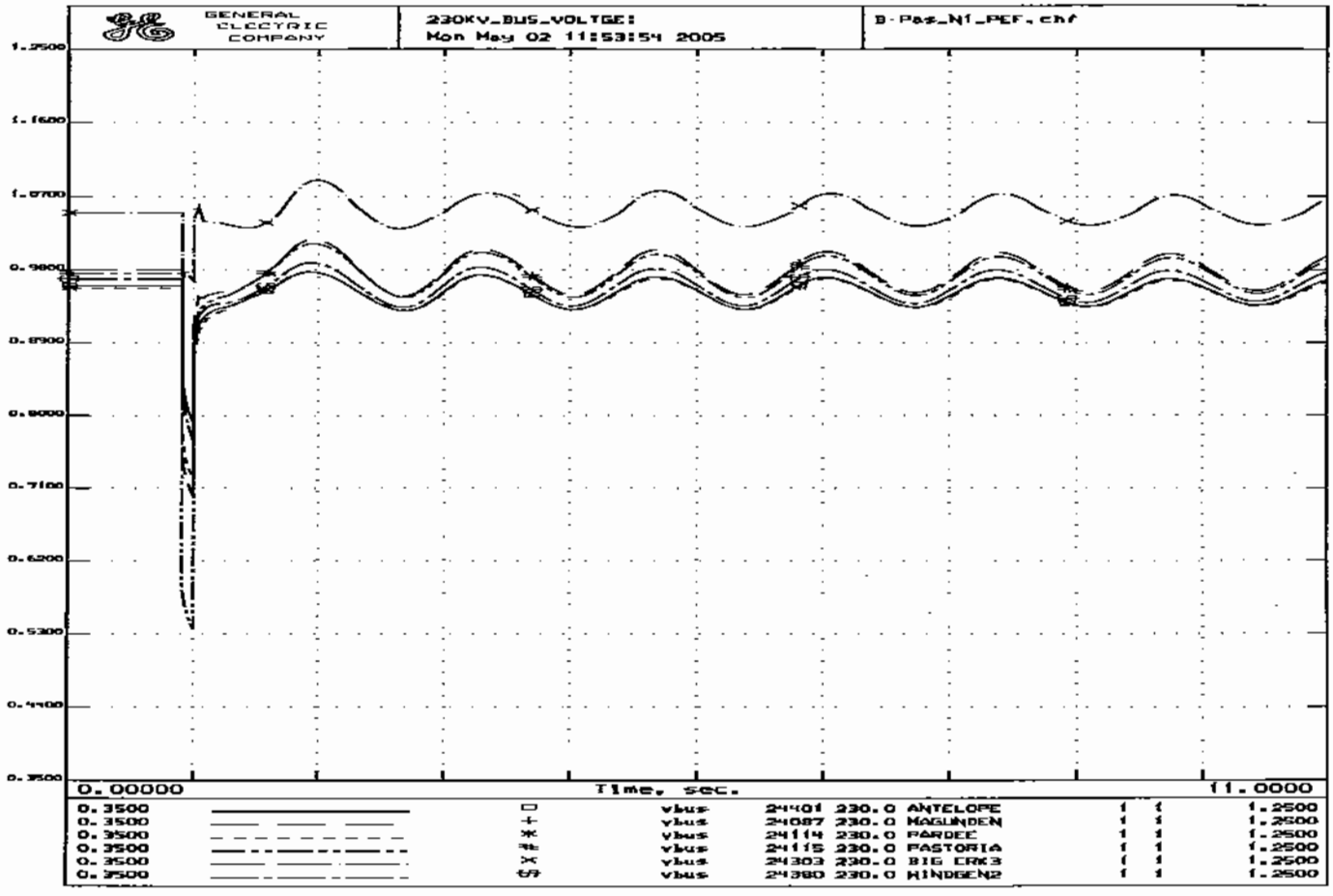
GENERAL ELECTRIC COMPANY
230KV_BUS_VOLTGE:
Mon May 02 11:53:54 2005
B-Pas_N1_PEF.chf
1.2500
1.1600
1.0700
0.9800
0.8900
0.8000
0.7100
0.6200
0.5300
0.4400
0.3500
0.00000
Time, sec.
11.0000
0.3500 vbus 24401 230.0 ANTELOPE 1 1 1.2500
0.3500 vbus 24087 230.0 MAGUNDEN 1 1 1.2500
0.3500 vbus 24114 230.0 PARDEE 1 1 1.2500
0.3500 vbus 24115 230.0 PASTORIA 1 1 1.2500
0.3500 vbus 24303 230.0 BIG CRK3 1 1 1.2500
0.3500 vbus 24380 230.0 WINDGEN2 1 1 1.2500

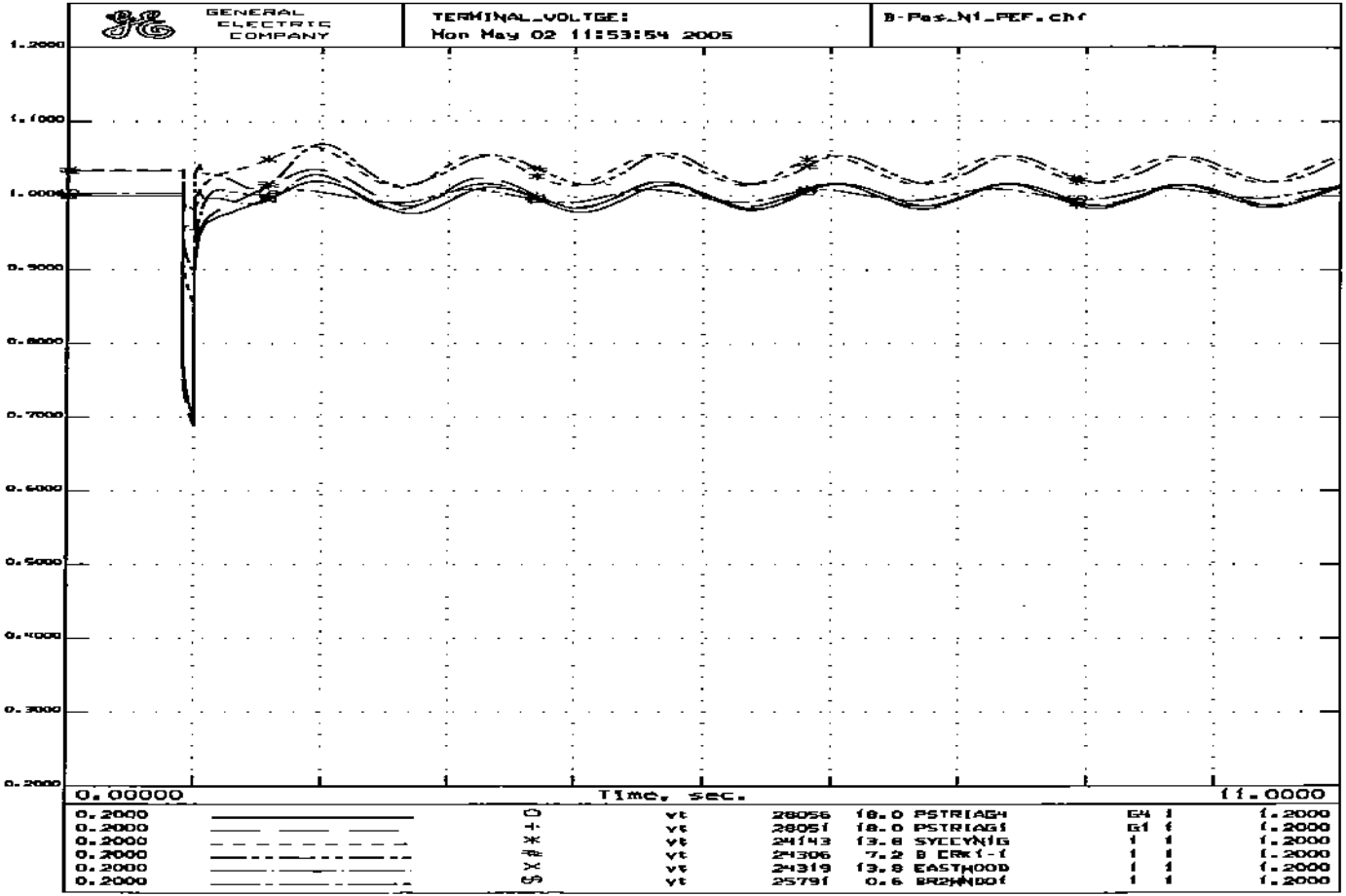
GENERAL ELECTRIC COMPANY
TERMINAL_VOLTGE:
Mon May 02 11:53:54 2005
B-Pos_N1_PEF.chf
1.2000
1.1000
1.0000
0.9000
0.8000
0.7000
0.6000
0.5000
0.4000
0.3000
0.2000
0.00000
Time, sec.
11.0000
0.2000 O vt 28056 18.0 PSTRIAGH G4 1 1.2000
0.2000 + vt 28051 18.0 PSTRIAG1 G1 1 1.2000
0.2000 * vt 24143 13.8 SYCCYNIG 1 1 1.2000
0.2000 # vt 24306 7.2 B ERK1-1 1 1 1.2000
0.2000 X vt 24319 13.8 EASTWOOD 1 1 1.2000
0.2000 vt 25791 0.6 BRANDOI 1 1 1.2000

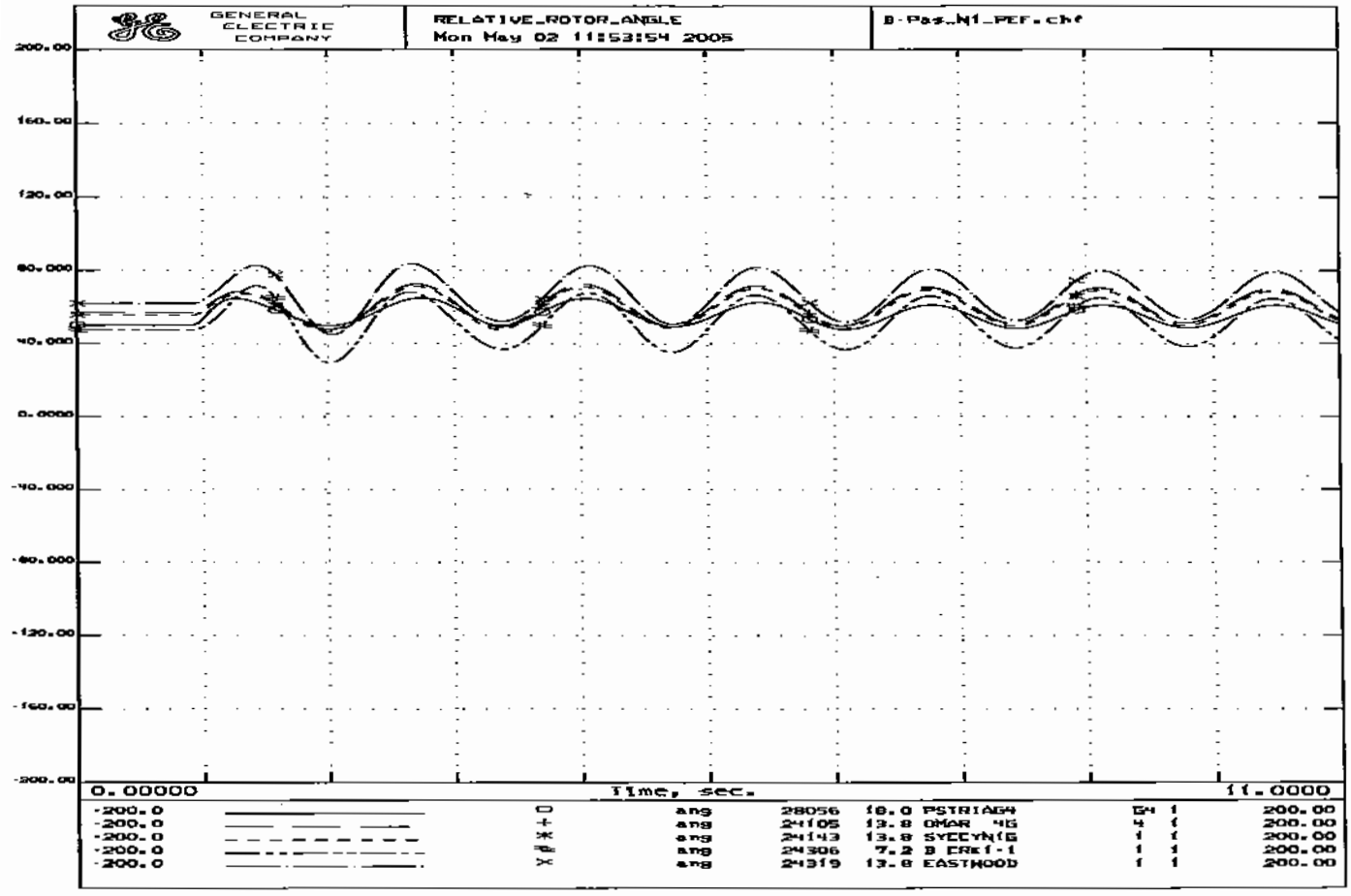
GENERAL ELECTRIC COMPANY
RELATIVE_ROTOR_ANGLE
Mon May 02 11:53:54 2005
B-Pas_N1_PEF.chf
200.00
160.00
120.00
80.000
40.000
0.0000
-40.000
-80.000
-120.00
-160.00
-200.00
0.00000
Time, sec.
11.0000
-200.0 ang 28056 18.0 PSTRIAG4 G4 1 200.00
-200.0 ang 24105 13.8 OMAR 4G 4 1 200.00
-200.0 ang 24143 13.8 SYECYN1G 1 1 200.00
-200.0 ang 24306 7.2 B ERE1-1 1 1 200.00
-200.0 ang 24319 13.8 EASTWOOD 1 1 200.00

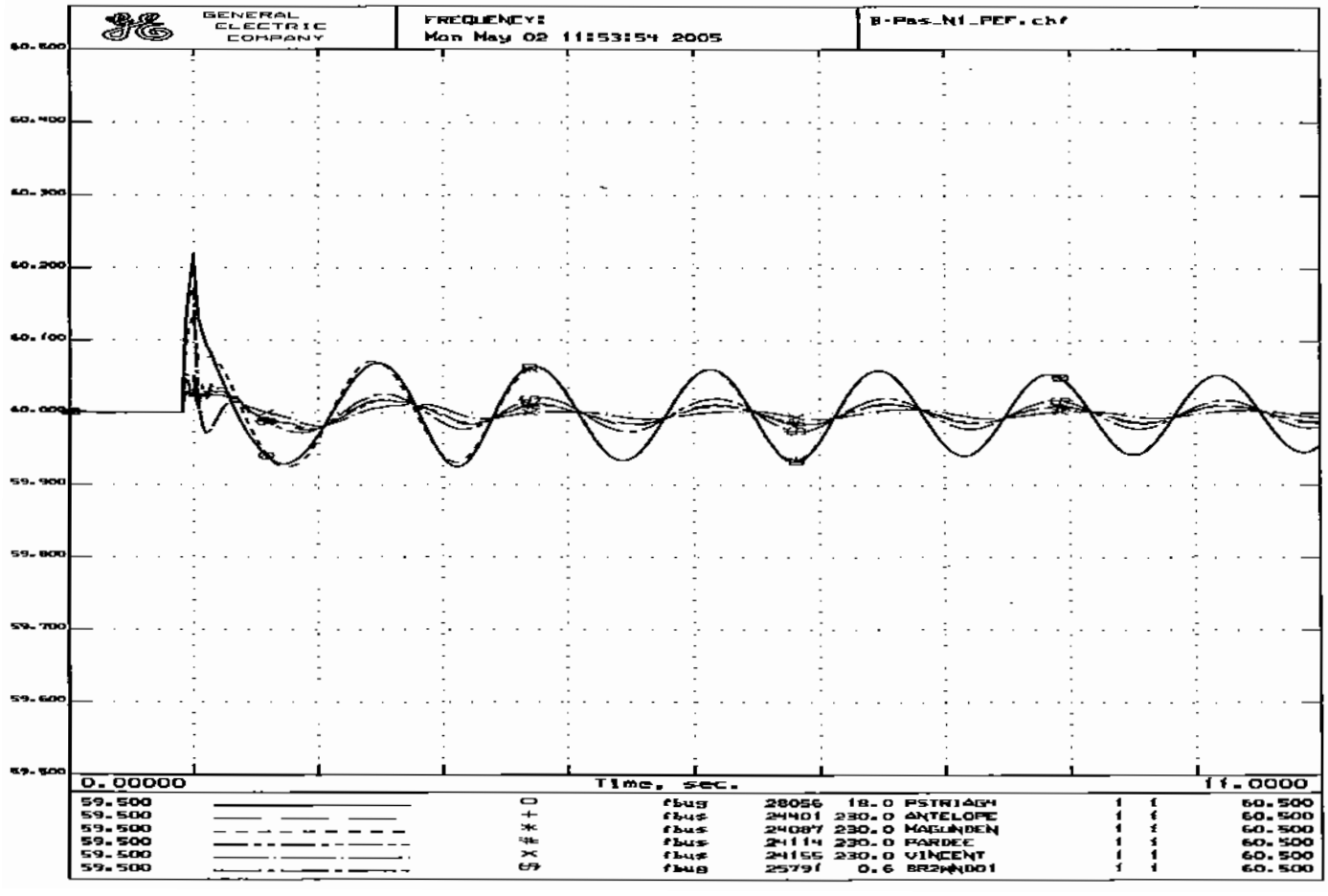
GENERAL ELECTRIC COMPANY
FREQUENCY:
Mon May 02 11:53:54 2005
B-Pas_N1_PEF.chf
60.500
60.400
60.300
60.200
60.100
60.000
59.900
59.800
59.700
59.600
59.500
0.00000
Time, sec.
11.0000
59.500 ○ fbus 28056 18.0 PSTRIAGH 1 1 60.500
59.500 + fbus 24401 230.0 ANTELOPE 1 1 60.500
59.500 ✳ fbus 24087 230.0 MAGUNDEN 1 1 60.500
59.500 ✱ fbus 24114 230.0 PARDEE 1 1 60.500
59.500 × fbus 24155 230.0 VINCENT 1 1 60.500
59.500 ◇ fbus 25791 0.6 BRPNDD1 1 1 60.500

```
PostPEF_High_SOM.sav
PostPEF.dyd
TXTLB
Calpine Pastoria Add Stability Study; Loss of One 230-KV Line
6-CYCLE 3-Phase Fault at Bailey 230kV Bus
N-1 OUTAGE: Pardee-Bailey 230kV Line
SYSTEM STABILITY CASE - B-P_N1_PostPEF.swt
PostPEF_High_SOM.sav + PostPEF.dyd + B-P_N1_PostPEF.swt
RUN 10.0
CC
CC   ***CALPINE PASTORIA ADD DYNAMIC STABILITY ASSESSMENT***
CC   APPLY A 3-PHASE FAULT ON THE BAILEY 230-KV BUS
FB   0.0 "BAILEY   " 230
CC
CC   CLEAR FAULT IN 6 CYCLES
CFB  6.0 "BAILEY   " 230
CC
CC   REMOVE PARDEE-BAILEY 230-KV LINE
DL   6.0 "PARDEE   " 230. "BAILEY   " 230. "1 "
```

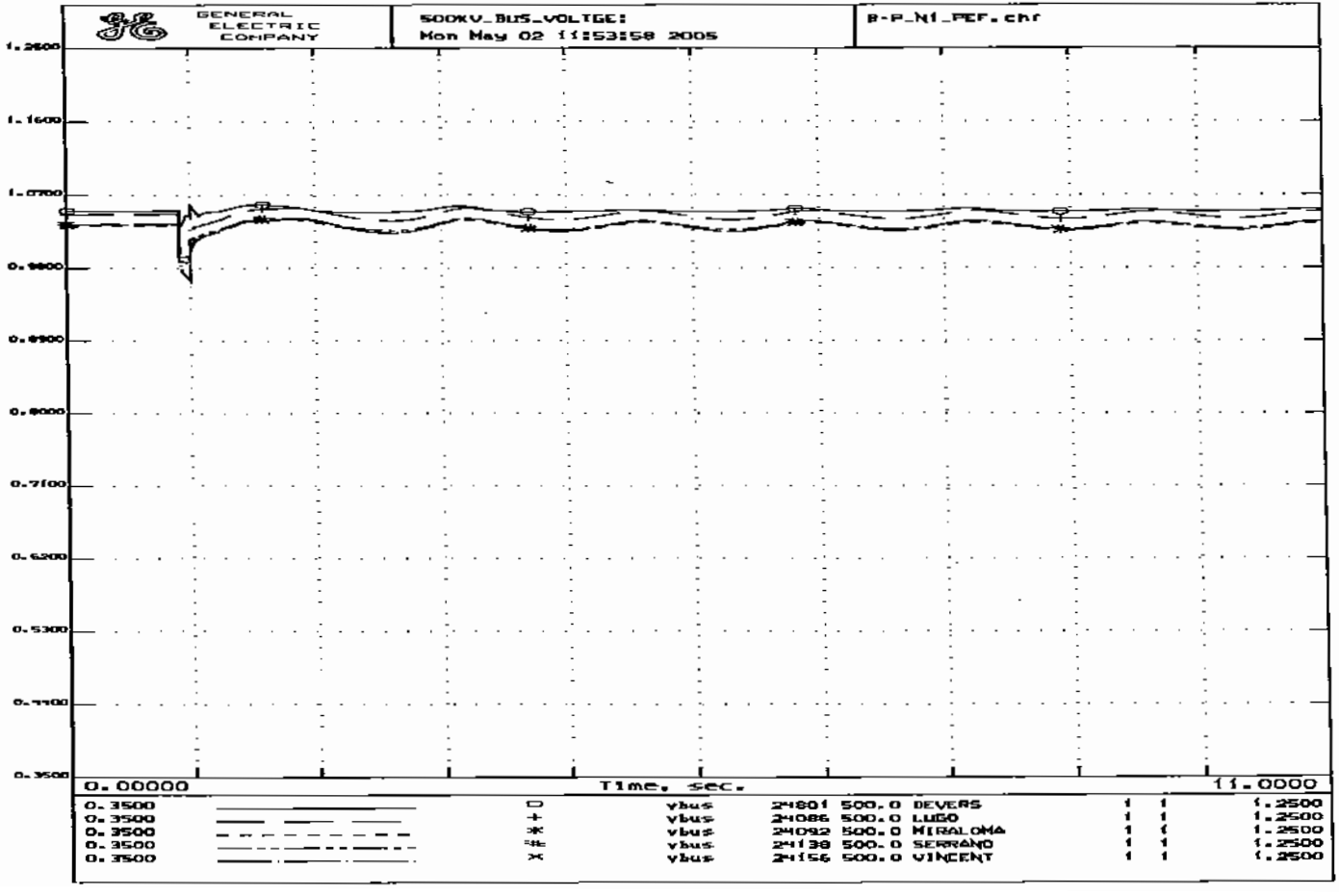
GENERAL ELECTRIC COMPANY
500KV_BUS_VOLTGE:
Mon May 02 11:53:58 2005
B-P_N1_PEF.chf
1.2600
1.1600
1.0700
0.9800
0.8900
0.8000
0.7100
0.6200
0.5300
0.4400
0.3500
0.00000
Time, sec.
11.0000
0.3500 □ vbus 24801 500.0 DEVERS 1 1 1.2500
0.3500 + vbus 24086 500.0 LUGO 1 1 1.2500
0.3500 * vbus 24092 500.0 MIRALOMA 1 1 1.2500
0.3500 # vbus 24138 500.0 SERRANO 1 1 1.2500
0.3500 × vbus 24156 500.0 VINCENT 1 1 1.2500

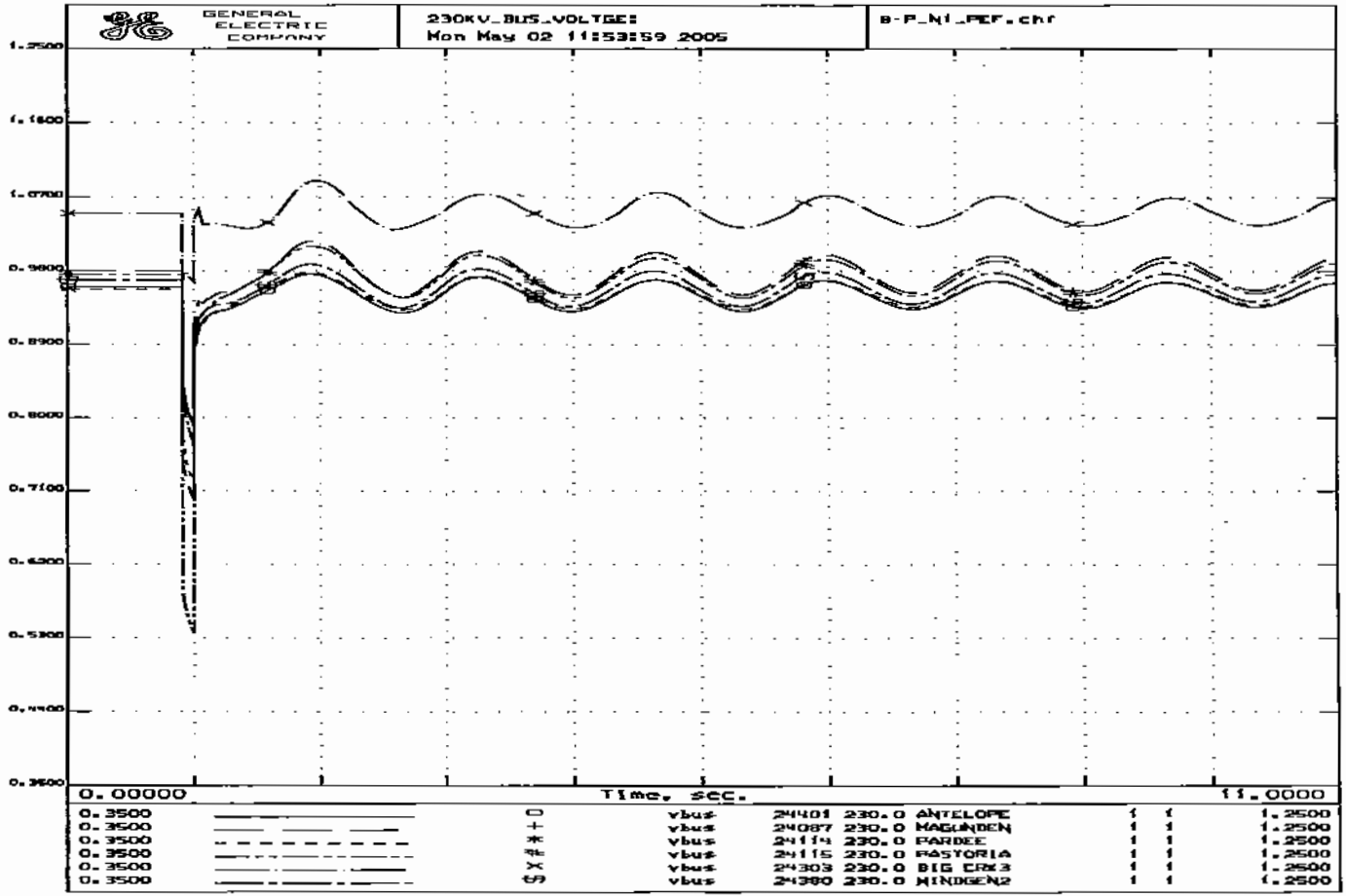
GENERAL ELECTRIC COMPANY
230KV_BUS_VOLTGE:
Mon May 02 11:53:59 2005
B-P_N1_PEF.chr
1.2500
1.1600
1.0700
0.9800
0.8900
0.8000
0.7100
0.6200
0.5300
0.4400
0.3500
0.00000
Time, sec.
11.0000
0.3500 vbus 24401 230.0 ANTELOPE 1 1 1.2500
0.3500 vbus 24087 230.0 MAGUNDEN 1 1 1.2500
0.3500 vbus 24114 230.0 PARDEE 1 1 1.2500
0.3500 vbus 24115 230.0 PASTORIA 1 1 1.2500
0.3500 vbus 24303 230.0 BIG CRK3 1 1 1.2500
0.3500 vbus 24380 230.0 MINDGEN2 1 1 1.2500

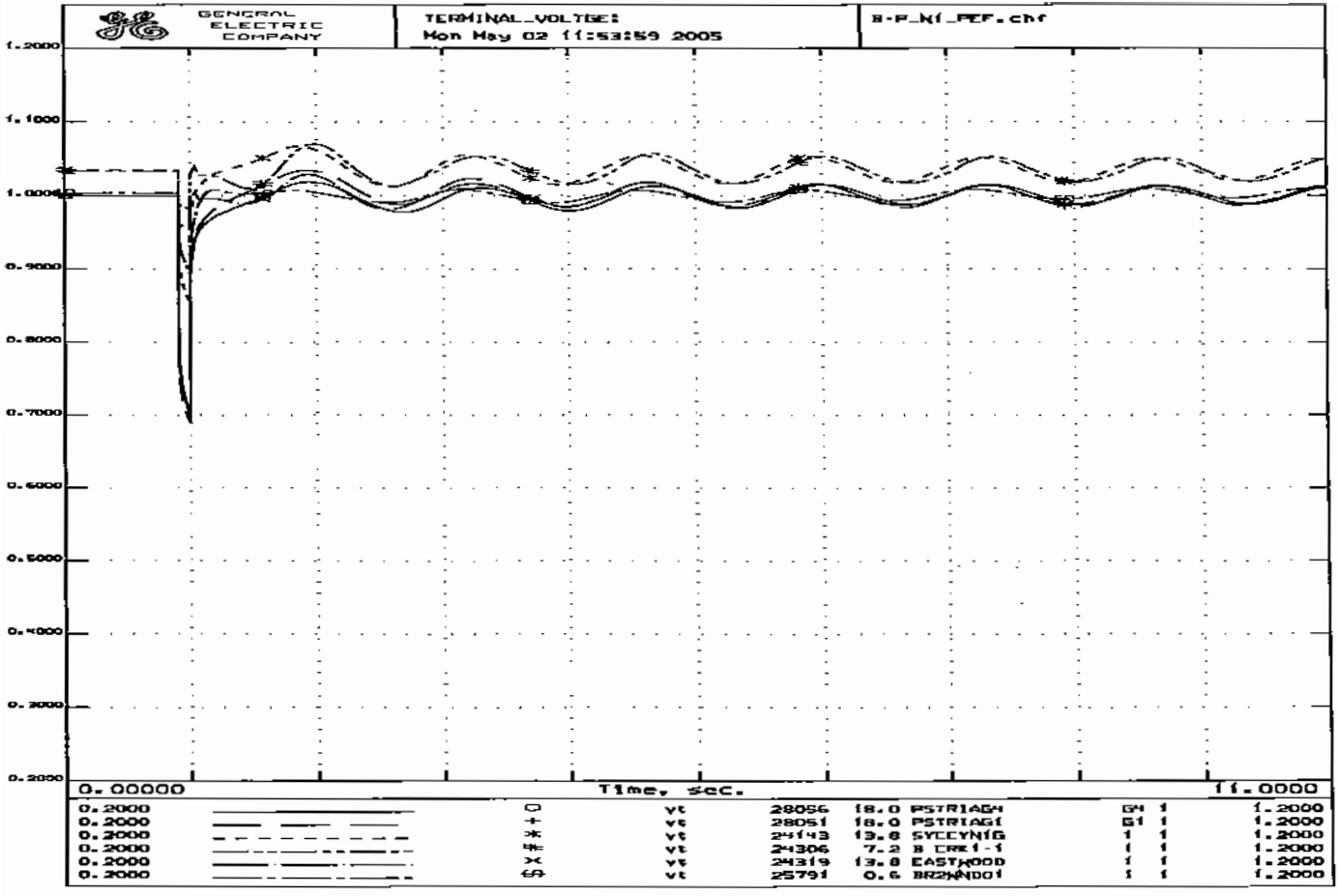
GENERAL ELECTRIC COMPANY
TERMINAL_VOLTGE:
Mon May 02 11:53:59 2005
B-F_N1_PEF.chf
1.2000
1.1000
1.0000
0.9000
0.8000
0.7000
0.6000
0.5000
0.4000
0.3000
0.2000
0.00000
Time, sec.
11.0000
0.2000 vt 28056 18.0 PSTRIAG4 G4 1 1.2000
0.2000 vt 28051 18.0 PSTRIAG1 G1 1 1.2000
0.2000 vt 24143 13.8 SYCCYN1G 1 1 1.2000
0.2000 vt 24306 7.2 B CRE1-1 1 1 1.2000
0.2000 vt 24319 13.8 EASTWOOD 1 1 1.2000
0.2000 vt 25791 0.6 BR2WNDO1 1 1 1.2000

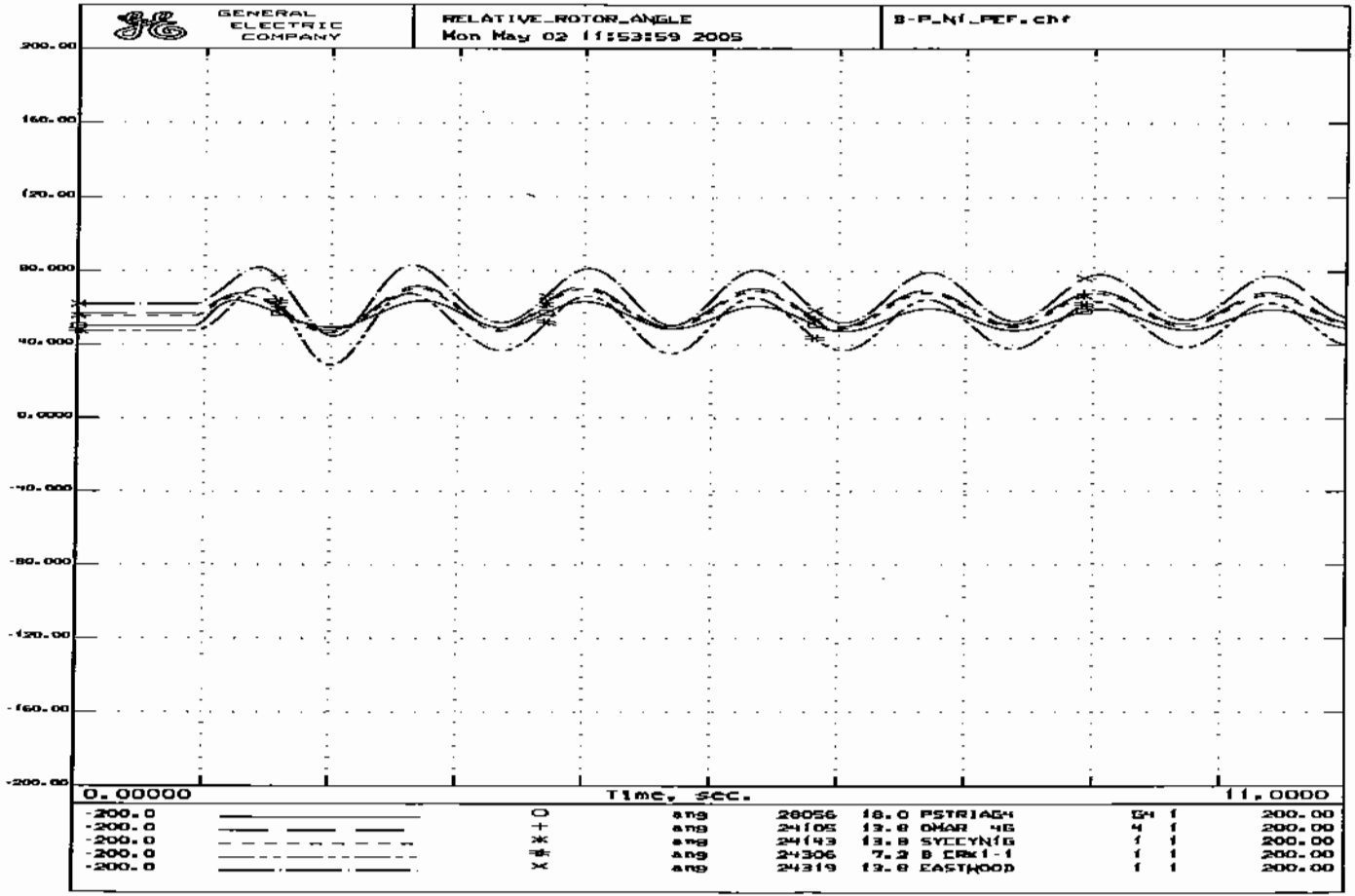
GENERAL ELECTRIC COMPANY
RELATIVE_ROTOR_ANGLE
Mon May 02 11:53:59 2005
B-P_N1_REF.chf
200.00
160.00
120.00
80.000
40.000
0.0000
-40.000
-80.000
-120.00
-160.00
-200.00
0.00000
Time, sec.
11.0000
-200.0 ang 28056 18.0 PSTRIAG4 G4 1 200.00
-200.0 ang 24105 13.8 DHAR 4B 4 1 200.00
-200.0 ang 24143 13.8 SYCCYN1G 1 1 200.00
-200.0 ang 24306 7.2 B CRK1-1 1 1 200.00
-200.0 ang 24319 13.8 EASTWOOD 1 1 200.00

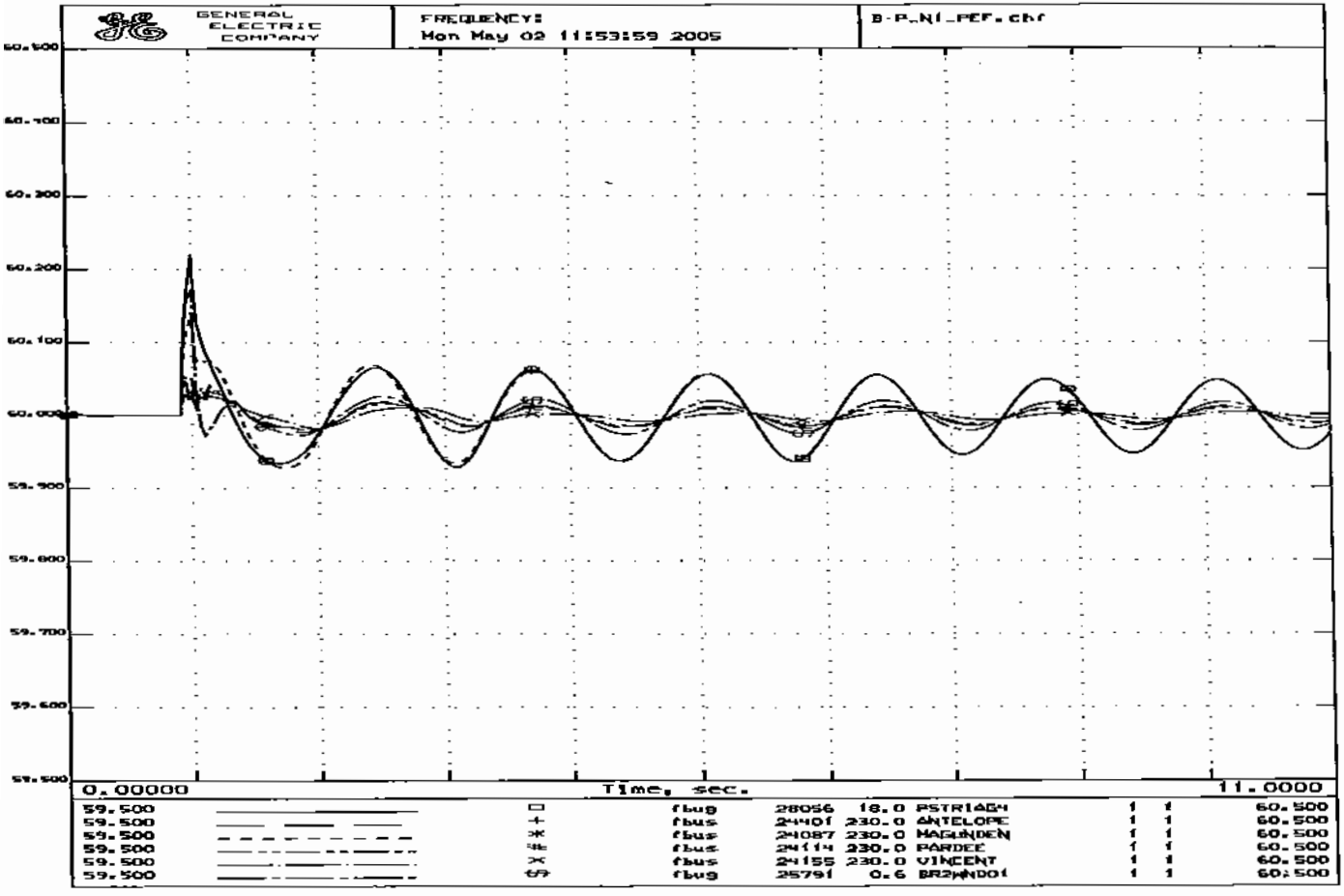
GENERAL ELECTRIC COMPANY
FREQUENCY:
Mon May 02 11:53:59 2005
B-P_NI_PEF.chf
60.500
60.400
60.300
60.200
60.100
60.000
59.900
59.800
59.700
59.600
59.500
0.00000
Time, sec.
11.0000
59.500 □ fbus 28056 18.0 PSTRIADH 1 1 60.500
59.500 + fbus 24401 230.0 ANTELOPE 1 1 60.500
59.500 * fbus 24087 230.0 MAGUNDEN 1 1 60.500
59.500 * fbus 24114 230.0 PARDEE 1 1 60.500
59.500 × fbus 24155 230.0 VINCENT 1 1 60.500
59.500 fbus 25791 0.6 BR2WNDO1 1 1 60.500

```
PostPEF_High_SOM.sav
PostPEF.dyd
TITLE
Calpine Pastoria Add Stability Study: Loss of One 230-KV Line
6-CYCLE 3-Phase Fault at Magunden 230kV Bus
N-1 OUTAGE: Magunden-Antelope No.1 230kV Line
SYSTEM STABILITY CASE - Ma-A_N1_PostPEF.swt
PostPEF_High_SOM.sav + PostPEF.dyd + Ma-A_N1_PostPEF.swt
RUN 10.0
CC
CC   ***CALPINE PASTORIA ADD DYNAMIC STABILITY ASSESSMENT***
CC   APPLY A 3-PHASE FAULT ON THE MAGUNDEN 230-KV BUS
FB   0.0 "MAGUNDEN" 230
CC
CC   CLEAR FAULT IN 6 CYCLES
CFB  6.0 "MAGUNDEN" 230
CC
CC   REMOVE MAGUNDEN-ANTELOPE NO.1 230-KV LINE
DL   6.0 "MAGUNDEN" 230. "ANTELOPE" 230. "1 "
```

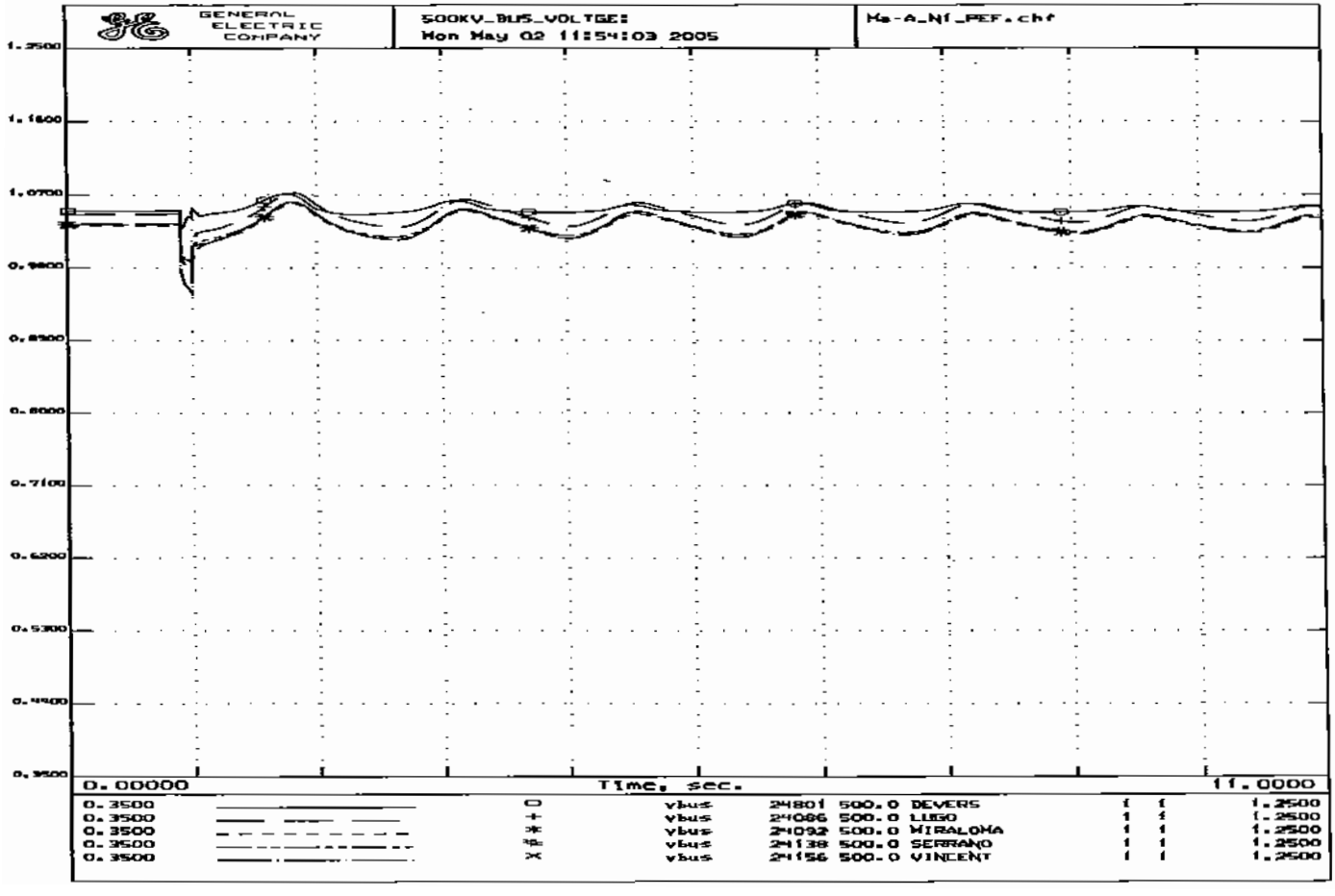
GENERAL ELECTRIC COMPANY
500KV_BUS_VOLTGE:
Mon May 02 11:54:03 2005
Ma-A_NI_REF.chf
1.2500
1.1600
1.0700
0.9800
0.8900
0.8000
0.7100
0.6200
0.5300
0.4400
0.3500
0.00000
Time, sec.
11.0000
0.3500 vbus 24801 500.0 DEVERS 1 1 1.2500
0.3500 vbus 24066 500.0 LUGO 1 1 1.2500
0.3500 vbus 24092 500.0 MIRALOMA 1 1 1.2500
0.3500 vbus 24138 500.0 SERRANO 1 1 1.2500
0.3500 vbus 24156 500.0 VINCENT 1 1 1.2500

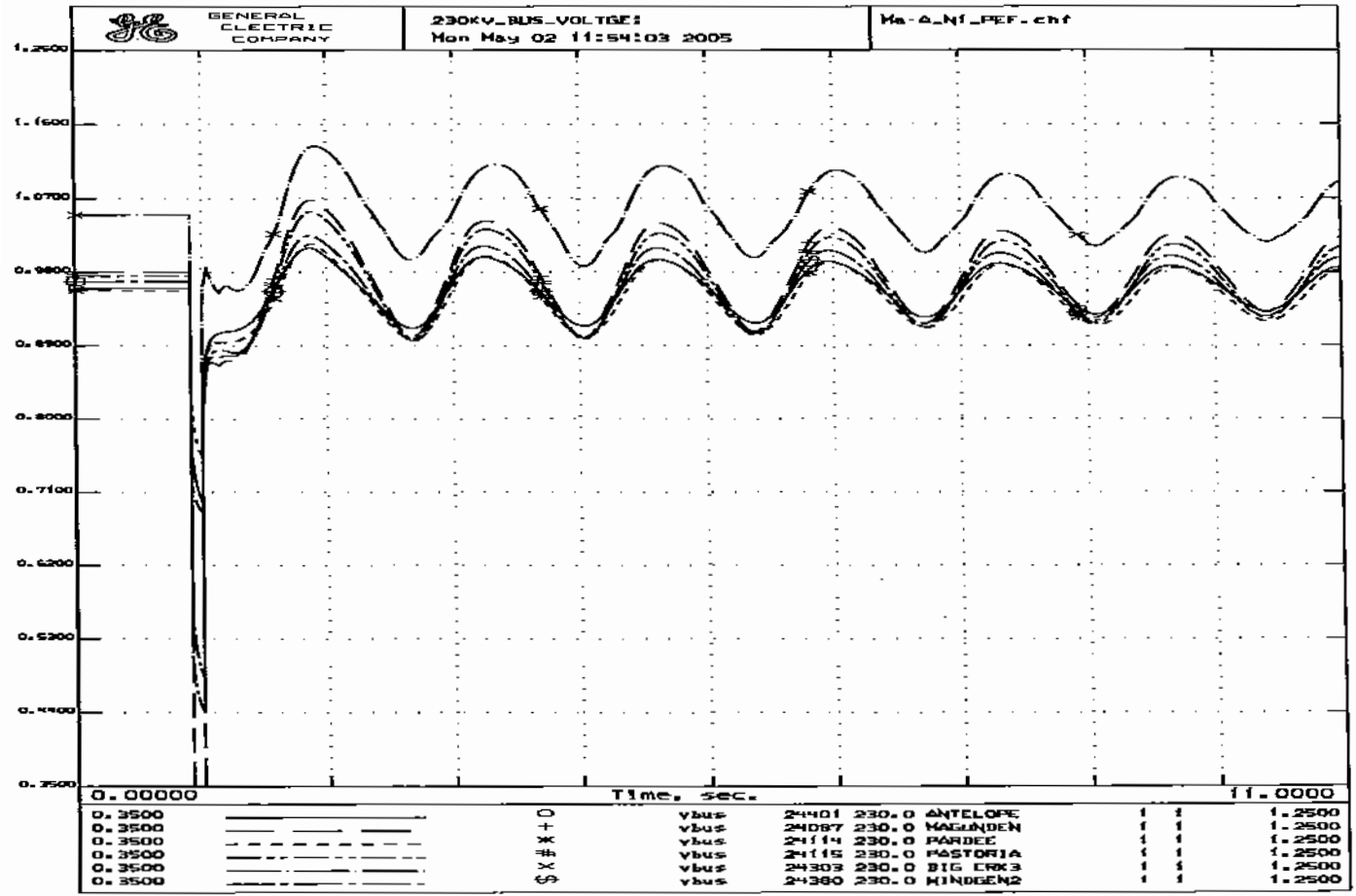
GENERAL ELECTRIC COMPANY
230KV_BUS_VOLTGE:
Mon May 02 11:54:03 2005
Ma-A_N1_PEF.chf
1.2500
1.1600
1.0700
0.9800
0.8900
0.8000
0.7100
0.6200
0.5300
0.4400
0.3500
0.00000
Time, sec.
11.0000
0.3500 O vbus 24401 230.0 ANTELOPE 1 1 1.2500
0.3500 + vbus 24087 230.0 MAGUNDEN 1 1 1.2500
0.3500 * vbus 24114 230.0 PARDEE 1 1 1.2500
0.3500 # vbus 24115 230.0 PASTORIA 1 1 1.2500
0.3500 X vbus 24303 230.0 BIG CRK3 1 1 1.2500
0.3500 vbus 24380 230.0 WINDGEN2 1 1 1.2500

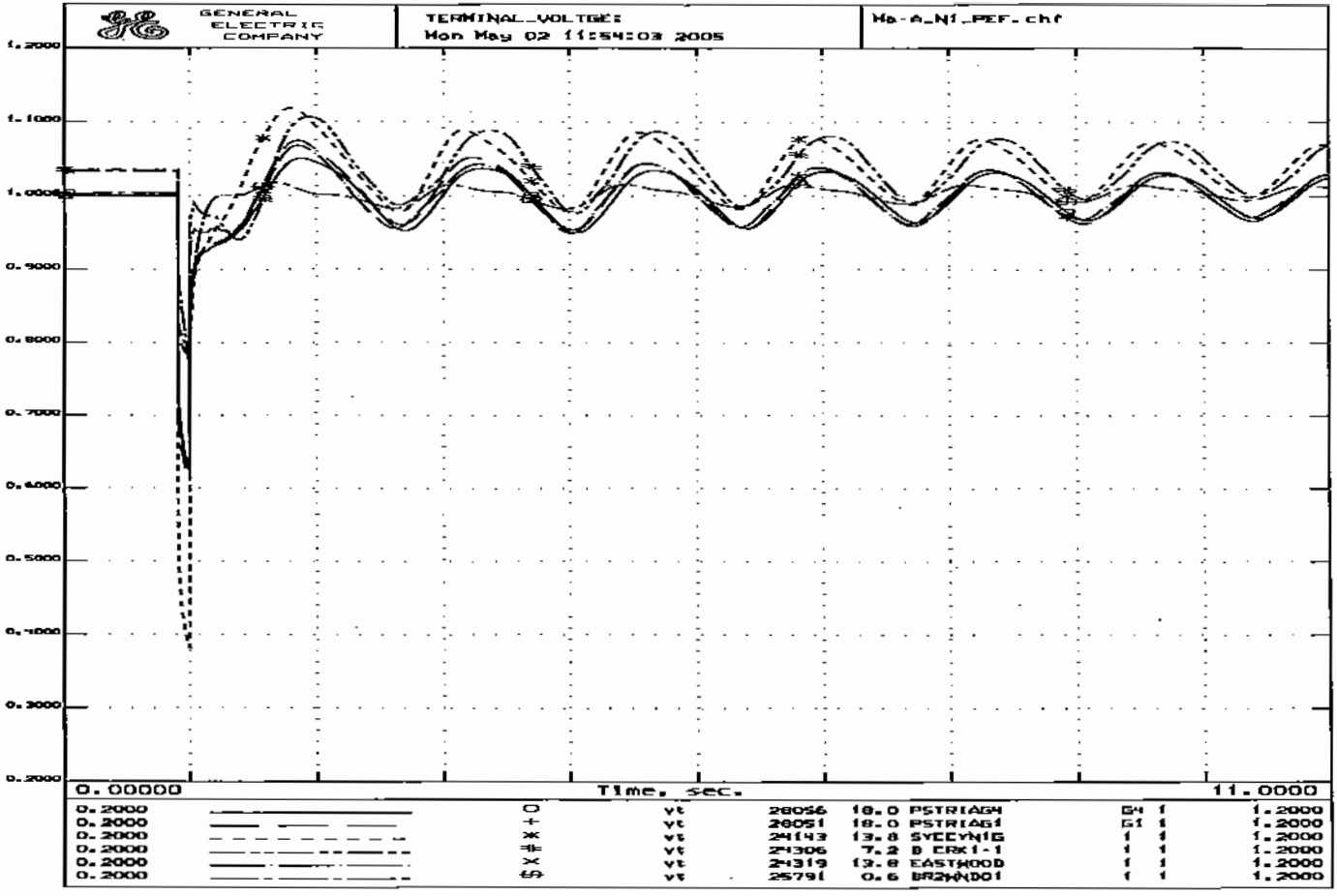
GENERAL ELECTRIC COMPANY
TERMINAL_VOLTGE:
Mon May 02 11:54:03 2005
Ma-A_N1_PEF.chf
1.2000
1.1000
1.0000
0.9000
0.8000
0.7000
0.6000
0.5000
0.4000
0.3000
0.2000
0.00000
Time, sec.
11.0000
0.2000 O vt 28056 18.0 PSTRIAG4 G4 1 1.2000
0.2000 + vt 28051 18.0 PSTRIAG1 G1 1 1.2000
0.2000 * vt 24143 13.8 SYCCYN1G 1 1 1.2000
0.2000 # vt 24306 7.2 B ERK1-1 1 1 1.2000
0.2000 X vt 24319 13.8 EASTWOOD 1 1 1.2000
0.2000 vt 25791 0.6 BR2WNDO1 1 1 1.2000

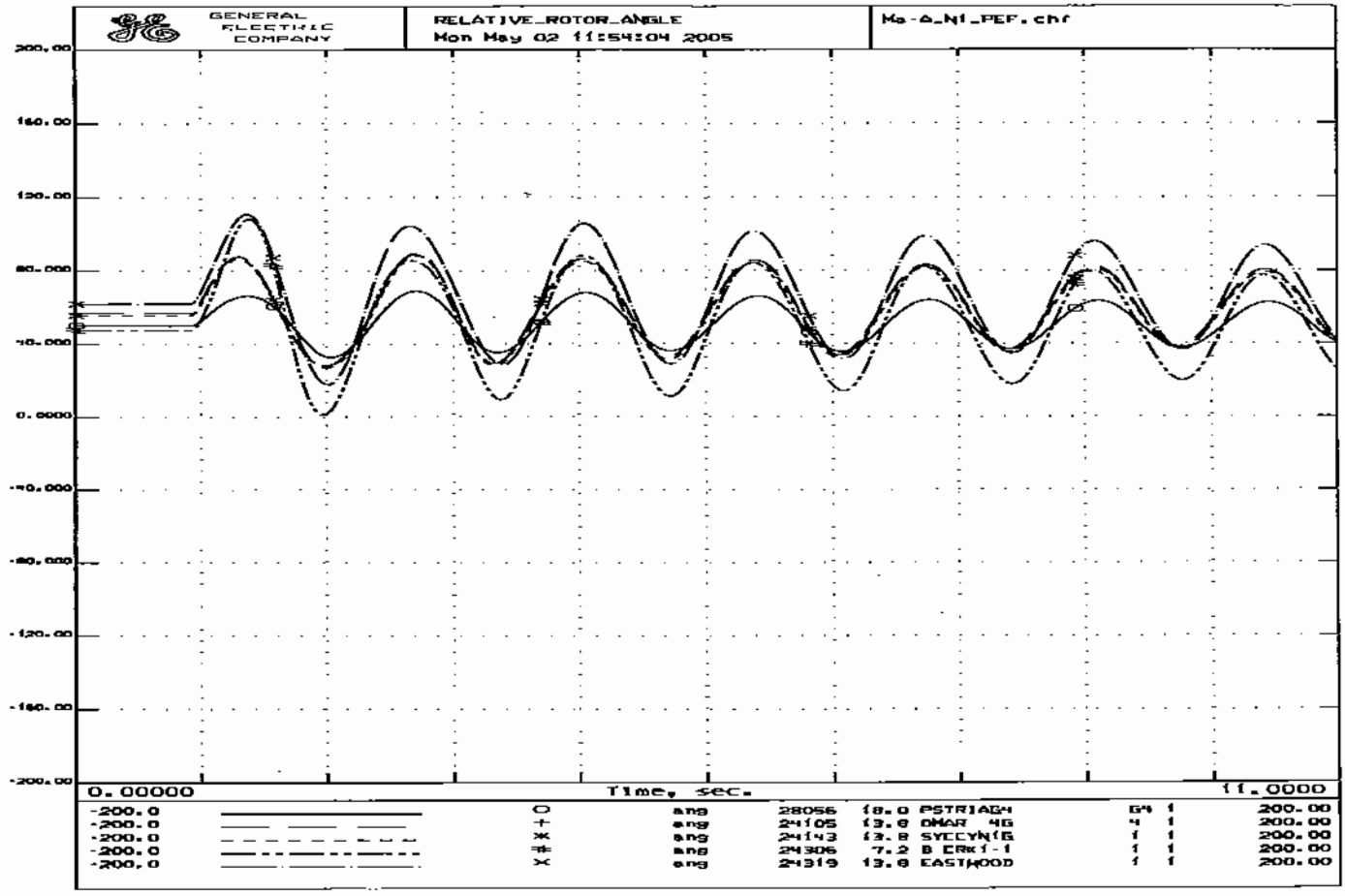
GENERAL ELECTRIC COMPANY
RELATIVE_ROTOR_ANGLE
Mon May 02 11:54:04 2005
Ma-A_N1_PEF.chf
200.00
160.00
120.00
80.000
40.000
0.0000
-40.000
-80.000
-120.00
-160.00
-200.00
0.00000
Time, sec.
11.0000
-200.0 ang 28056 18.0 PSTRIAGH G4 1 200.00
-200.0 ang 24105 13.8 DMAR 4G 4 1 200.00
-200.0 ang 24143 13.8 SYECYNIG 1 1 200.00
-200.0 ang 24306 7.2 B ERK1-1 1 1 200.00
-200.0 ang 24319 13.8 EASTWOOD 1 1 200.00

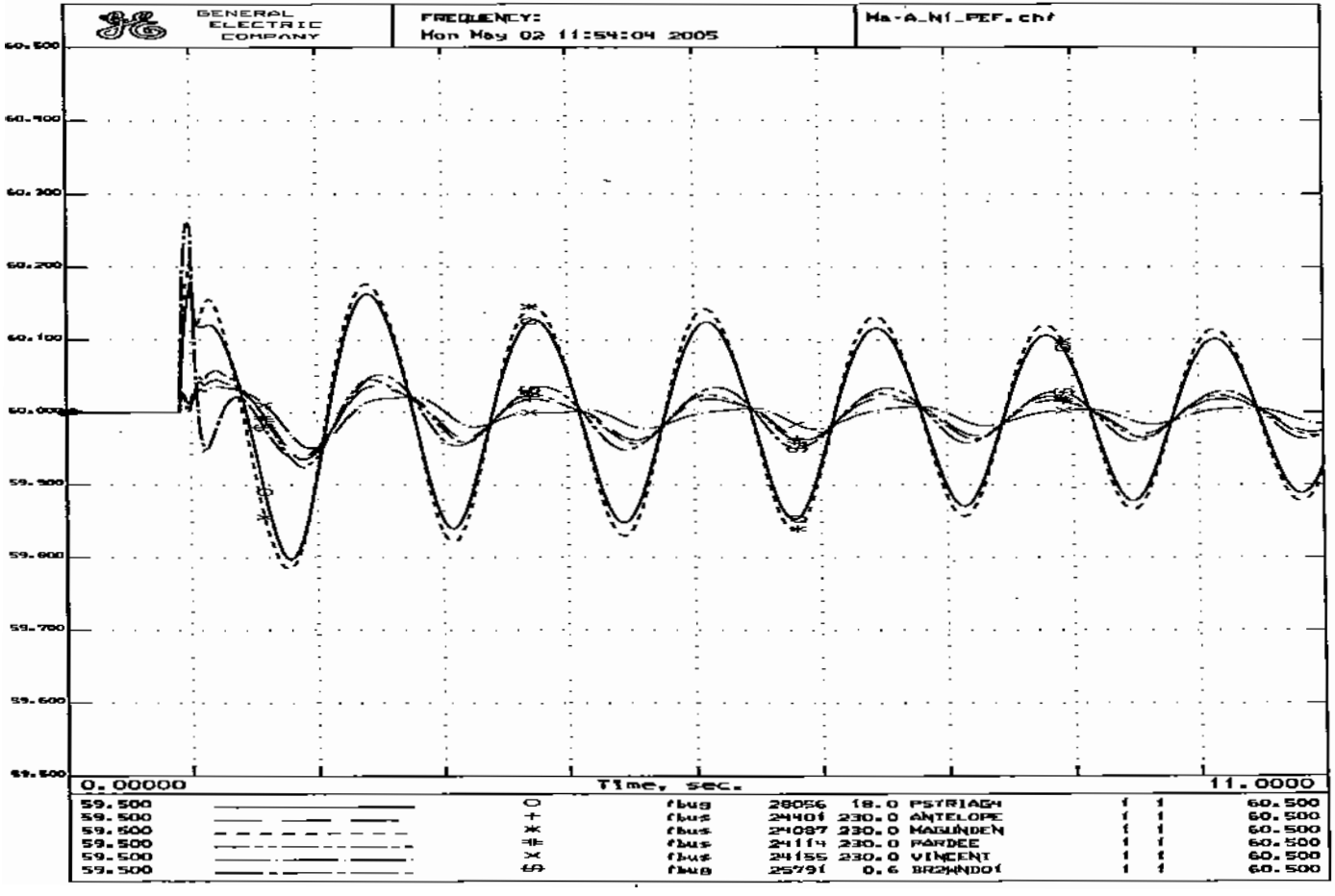
GENERAL ELECTRIC COMPANY
FREQUENCY:
Mon May 02 11:54:04 2005
Ma-A_NI_PEF.chf
60.500
60.400
60.300
60.200
60.100
60.000
59.900
59.800
59.700
59.600
59.500
0.00000
Time, sec.
11.0000
59.500 ○ fbus 28056 18.0 PSTRIAGH 1 1 60.500
59.500 + fbus 24401 230.0 ANTELOPE 1 1 60.500
59.500 ✳ fbus 24087 230.0 MAGUNDEN 1 1 60.500
59.500 ⋕ fbus 24114 230.0 PARDEE 1 1 60.500
59.500 × fbus 24155 230.0 VINCENT 1 1 60.500
59.500 ⊕ fbus 25791 0.6 BRAWNDO1 1 1 60.500

```
PostPEF_High_SOM.sav
PostPEF.dyd
TITLE
Calpine Pastoria Add Stability Study: Loss of One 230-KV Line
6-CYCLE 3-Phase Fault at Magunden 230kV Bus
N-1 OUTAGE: Magunden-Pastoria No.3 230kV Line
SYSTEM STABILITY CASE - Ma-Pas_N1_PostPEF.swt
PostPEF_High_SOM.sav + PostPEF.dyd + Ma-Pas_N1_PostPEF.swt
RUN 10.0
CC
CC   ***CALPINE PASTORIA ADD DYNAMIC STABILITY ASSESSMENT***
CC   APPLY A 3-PHASE FAULT ON THE MAGUNDEN 230-KV BUS
FB   0.0 "MAGUNDEN" 230
CC
CC   CLEAR FAULT IN 6 CYCLES
CFB  6.0 "MAGUNDEN" 230
CC
CC   REMOVE MAGUNDEN-ANTELOPE NO.3 230-KV LINE
DL   6.0 "MAGUNDEN" 230. "PASTORIA" 230. "3 "
```

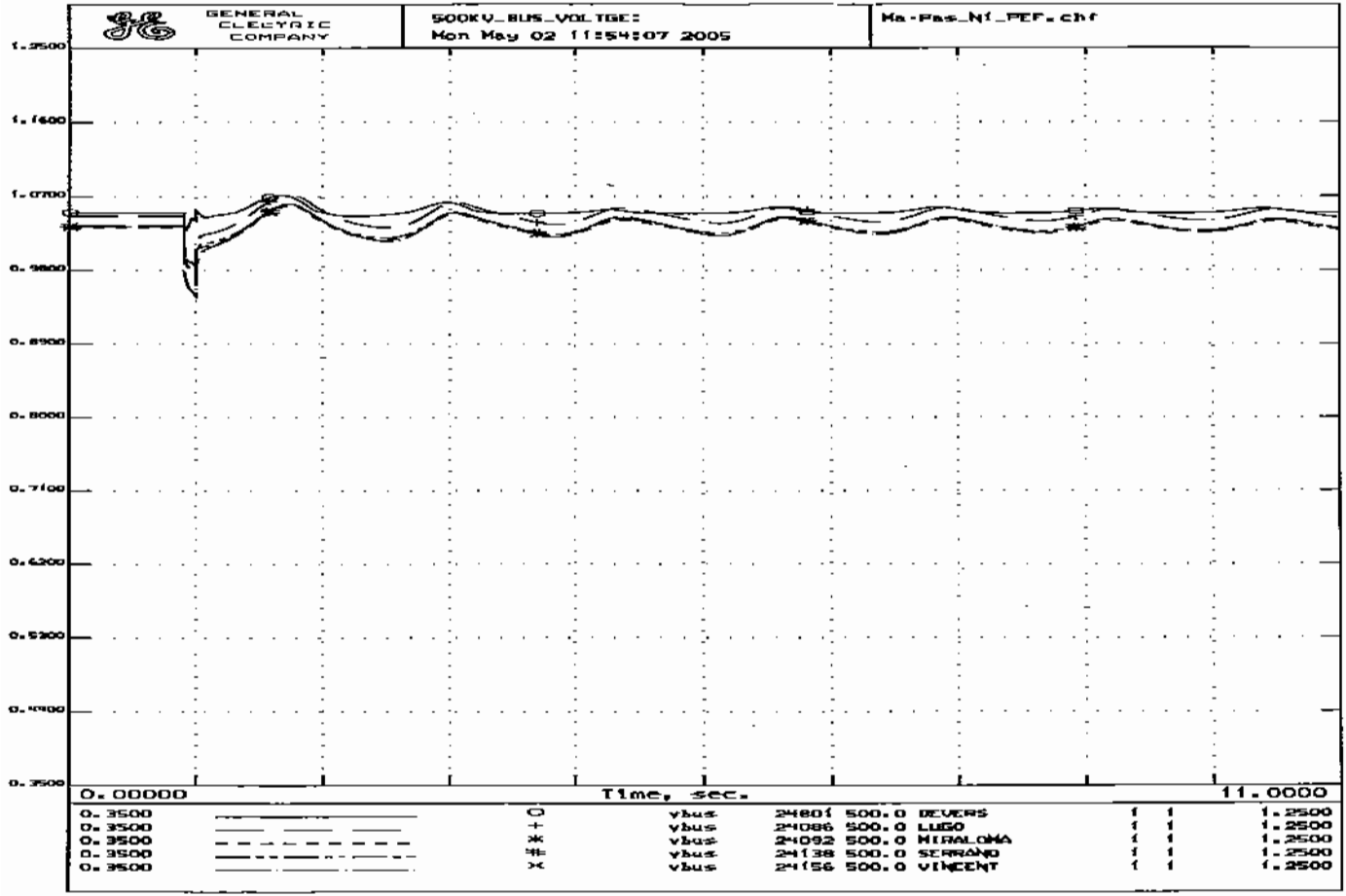
GENERAL ELECTRIC COMPANY
500KV_BUS_VOLTGE:
Mon May 02 11:54:07 2005
Ma-Pas_Ni_PEF.chf
1.2500
1.1600
1.0700
0.9800
0.8900
0.8000
0.7100
0.6200
0.5300
0.4400
0.3500
0.00000
Time, sec.
11.0000
0.3500 O vbus 24801 500.0 DEVERS 1 1 1.2500
0.3500 + vbus 24086 500.0 LUGO 1 1 1.2500
0.3500 * vbus 24092 500.0 MIRALOMA 1 1 1.2500
0.3500 # vbus 24138 500.0 SERRANO 1 1 1.2500
0.3500 X vbus 24156 500.0 VINCENT 1 1 1.2500

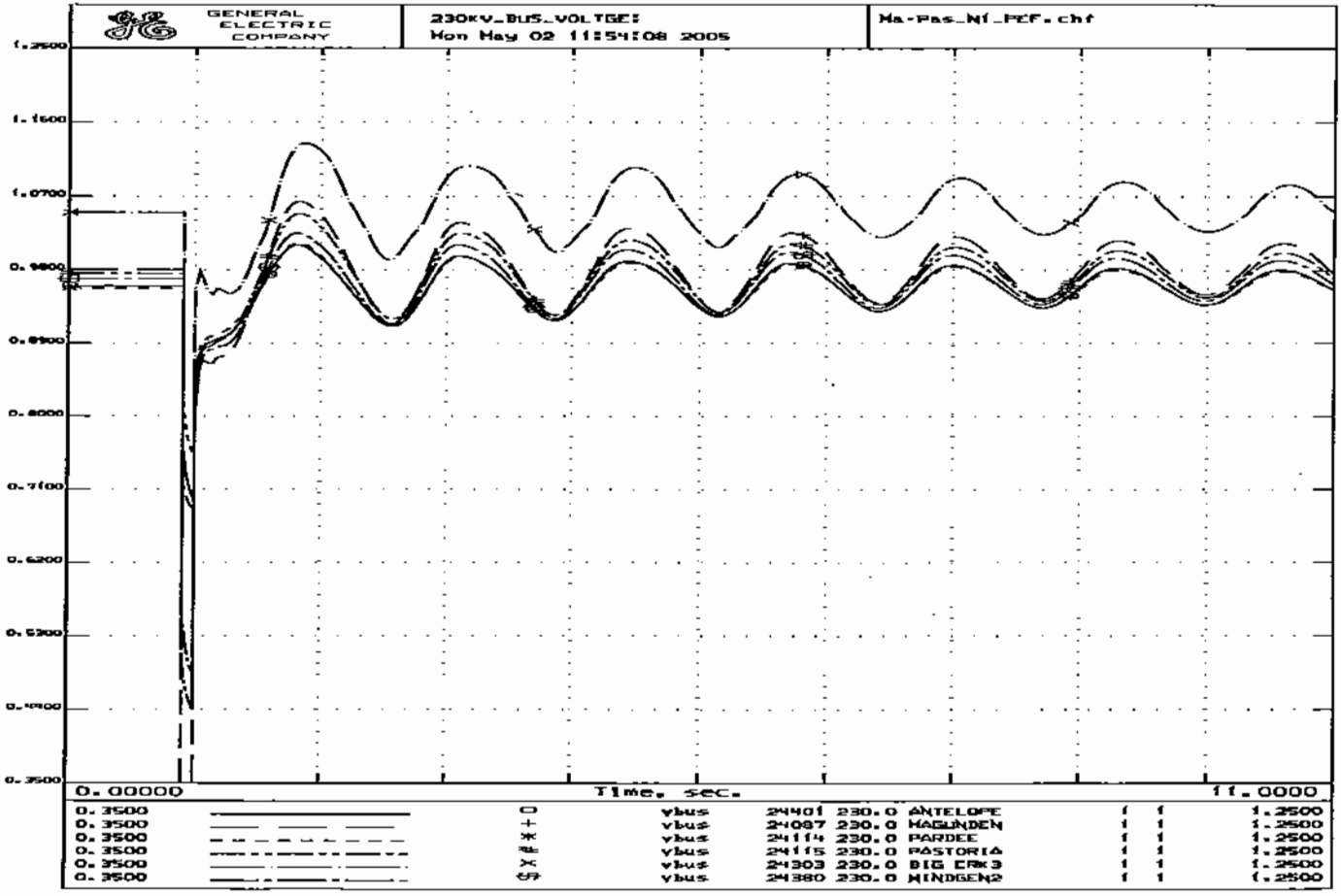
GENERAL ELECTRIC COMPANY
230KV_BUS_VOLTGE:
Mon May 02 11:54:08 2005
Ma-Pas_NI_PEF.chf
1.2500
1.1600
1.0700
0.9800
0.8900
0.8000
0.7100
0.6200
0.5300
0.4400
0.3500
0.00000
Time, sec.
11.0000
0.3500 vbus 24401 230.0 ANTELOPE 1 1 1.2500
0.3500 vbus 24087 230.0 MAGUNDEN 1 1 1.2500
0.3500 vbus 24114 230.0 PARDEE 1 1 1.2500
0.3500 vbus 24115 230.0 PASTORIA 1 1 1.2500
0.3500 vbus 24303 230.0 BIG CRK3 1 1 1.2500
0.3500 vbus 24380 230.0 MINDGEN2 1 1 1.2500

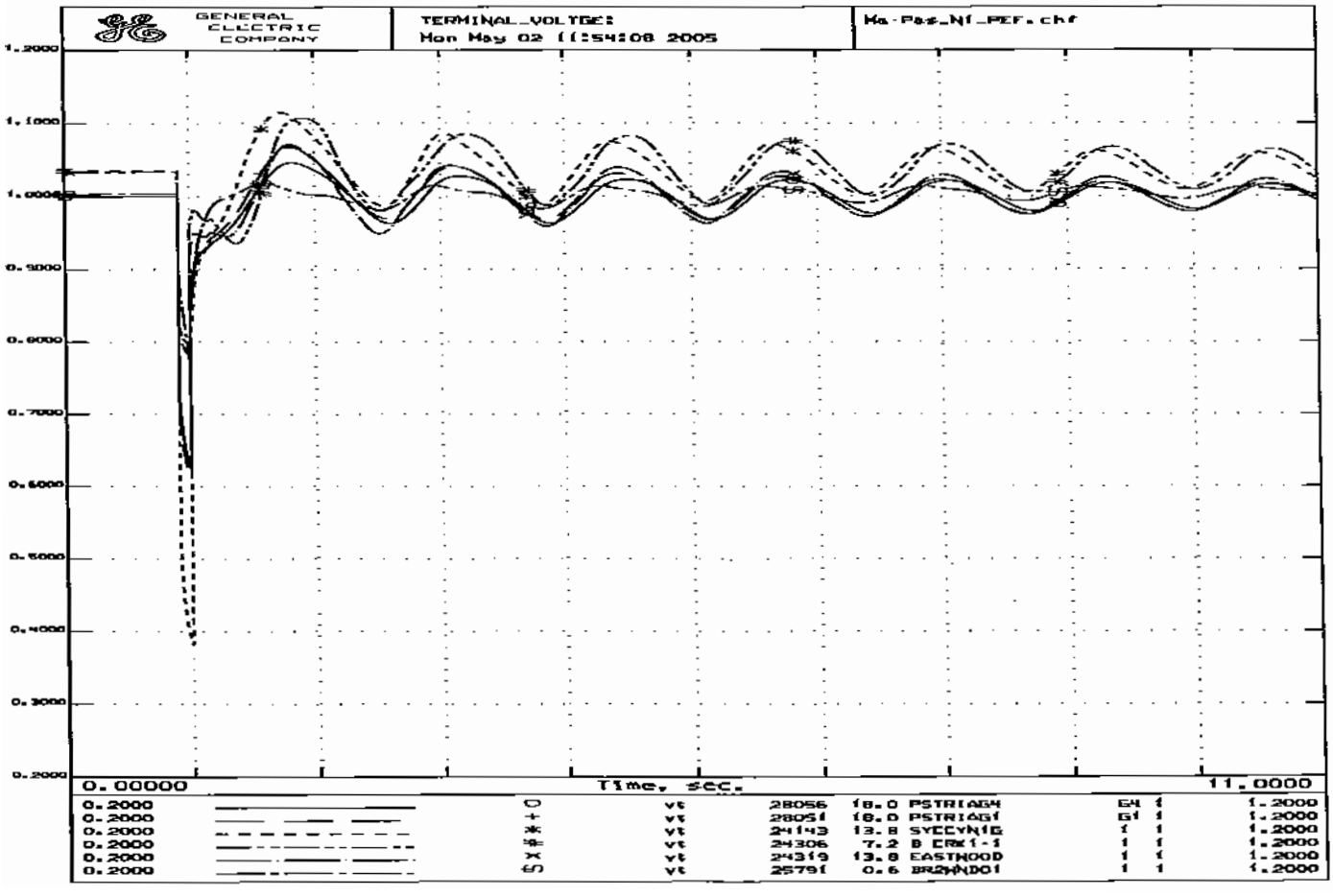
GENERAL ELECTRIC COMPANY
TERMINAL_VOLTGE:
Mon May 02 11:54:08 2005
Ma-Pas_Nf_PEF.chf
1.2000
1.1000
1.0000
0.9000
0.8000
0.7000
0.6000
0.5000
0.4000
0.3000
0.2000
0.00000
Time, sec.
11.0000
0.2000 ○ vt 28056 18.0 PSTRIAGH E4 1 1.2000
0.2000 + vt 28051 18.0 PSTRIAGI G1 1 1.2000
0.2000 ✱ vt 24143 13.8 SYECYN1G 1 1 1.2000
0.2000 ✱ vt 24306 7.2 B ERK1-1 1 1 1.2000
0.2000 × vt 24319 13.8 EASTWOOD 1 1 1.2000
0.2000 ⊕ vt 25791 0.6 BRZWNDO1 1 1 1.2000

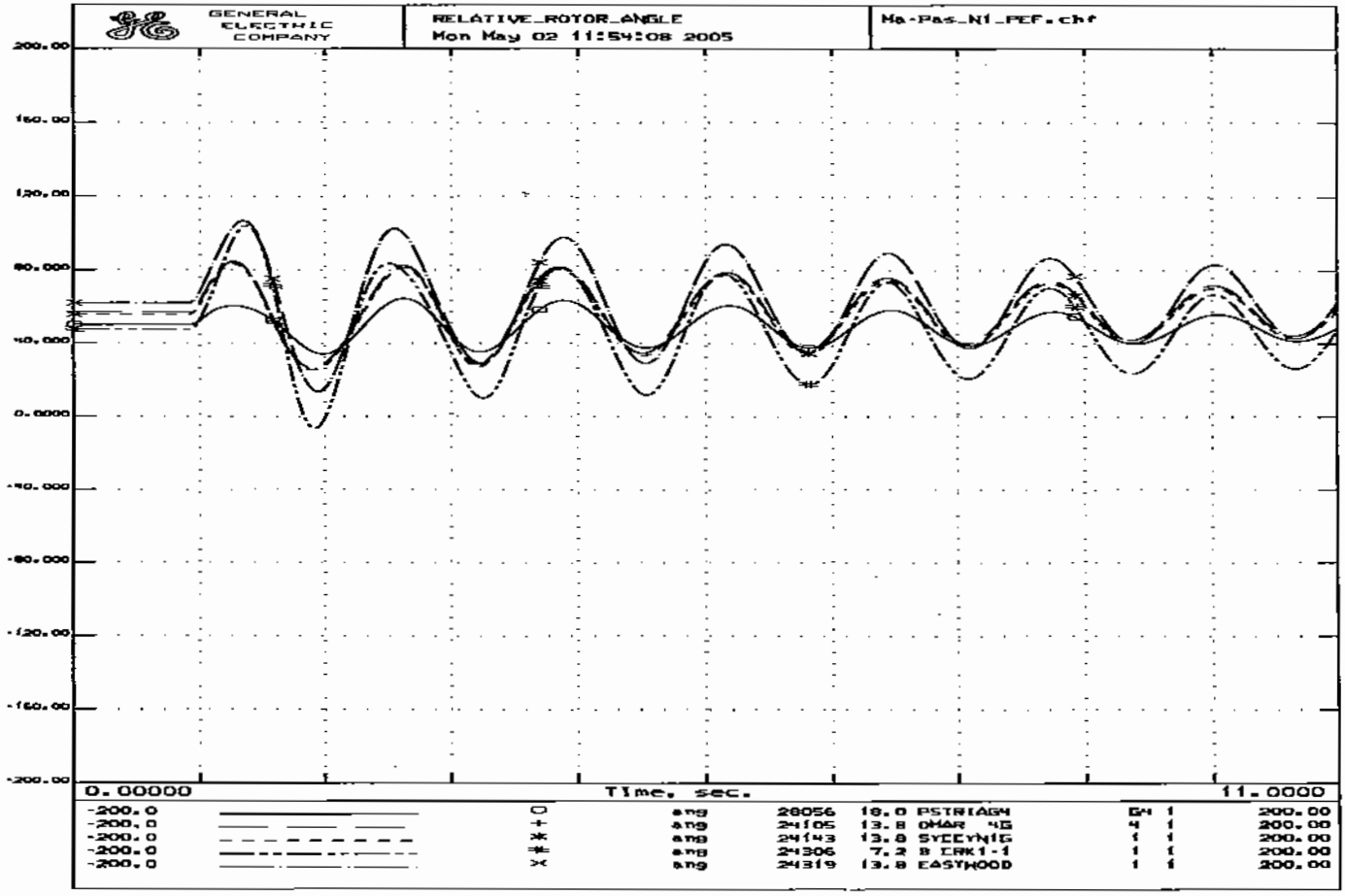
GENERAL ELECTRIC COMPANY
RELATIVE_ROTOR_ANGLE
Mon May 02 11:54:08 2005
Ma-Pas_N1_PEF.chf
200.00
160.00
120.00
80.000
40.000
0.0000
-40.000
-80.000
-120.00
-160.00
-200.00
0.00000
Time, sec.
11.0000
-200.0 ang 28056 18.0 PSTRTAGM 1 200.00
-200.0 ang 24105 13.8 OMAR 4G 4 1 200.00
-200.0 ang 24143 13.8 SYCEYNIG 1 1 200.00
-200.0 ang 24306 7.2 B CRK1-1 1 1 200.00
-200.0 ang 24319 13.8 EASTWOOD 1 1 200.00

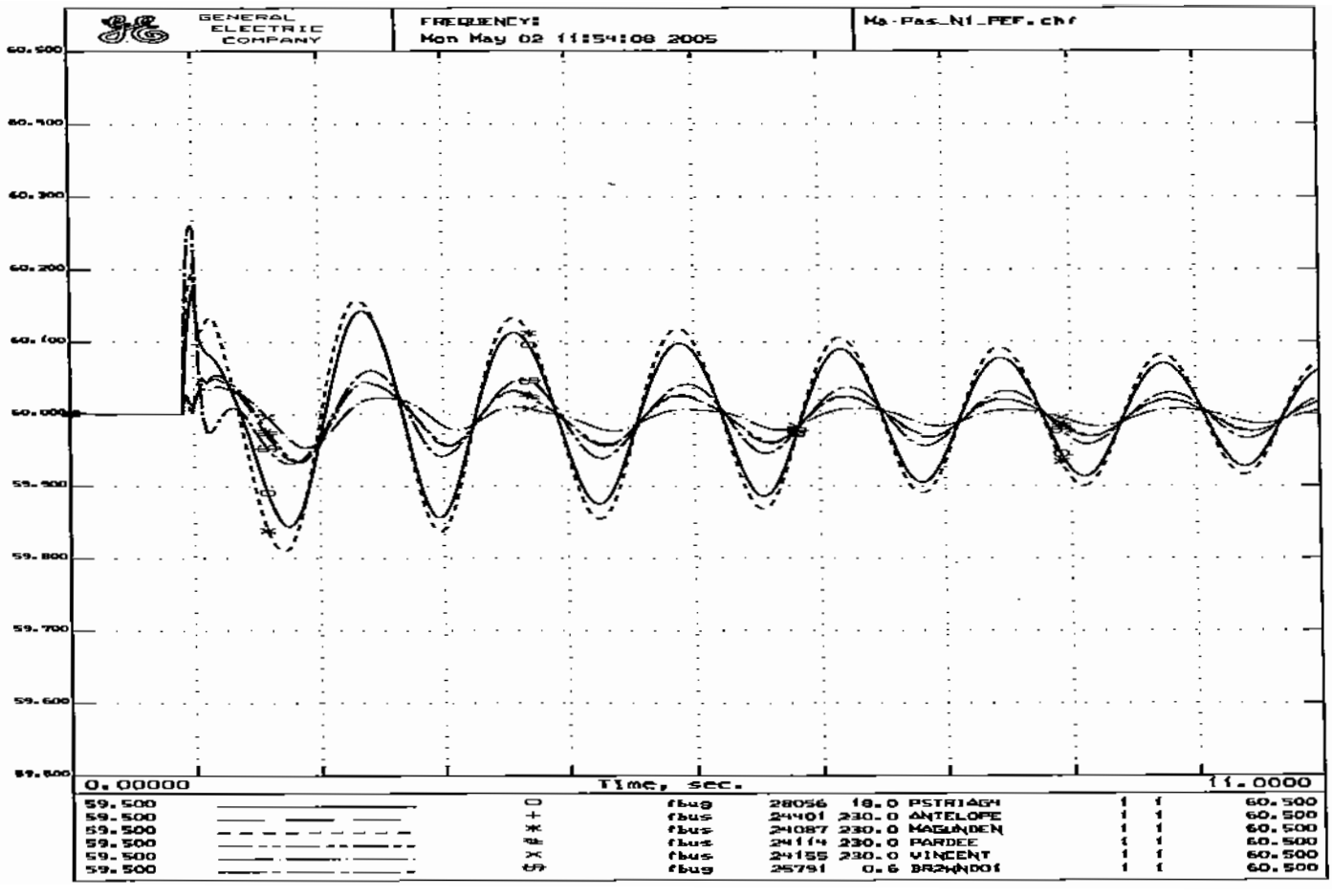
GENERAL ELECTRIC COMPANY
FREQUENCY:
Mon May 02 11:54:08 2005
Ma-Pas_N1_PEF.chf
60.500
60.400
60.300
60.200
60.100
60.000
59.900
59.800
59.700
59.600
59.500
0.00000
Time, sec.
11.0000
59.500 fbus 28056 18.0 PSTRIAGH 1 1 60.500
59.500 fbus 24401 230.0 ANTELOPE 1 1 60.500
59.500 fbus 24087 230.0 MASUNDEN 1 1 60.500
59.500 fbus 24114 230.0 PARDEE 1 1 60.500
59.500 fbus 24155 230.0 VINCENT 1 1 60.500
59.500 fbus 25791 0.6 BR2WNDO1 1 1 60.500

```
PostPEF_High_SOM.sav
PostPEF.dyd
TITLE
Calpine Pastoria Add Stability Study: Loss of One 230-KV Line
6-CYCLE 3-Phase Fault at Magunden 230kV Bus
N-1 OUTAGE: Magunden-Windgen2 230kV Line
SYSTEM STABILITY CASE - Ma-W2_N1_PostPEF.swt
PostPEF_High_SOM.sav + PostPEF.dyd + Ma-W2_N1_PostPEF.swt
RUN 10.0
CC
CC   ***CALPINE PASTORIA ADD DYNAMIC STABILITY ASSESSMENT+++
CC   APPLY A 3-PHASE FAULT ON THE MAGUNDEN 230-KV BUS
FB   0.0 "MAGUNDEN" 230
CC
CC   CLEAR FAULT IN 6 CYCLES
CFB 6.0 "MAGUNDEN" 230
CC
CC   REMOVE MAGUNDEN-WINDGEN2 230-KV LINE
DL   6.0 "MAGUNDEN" 230, "WINDGEN2" 230, "1 "
```

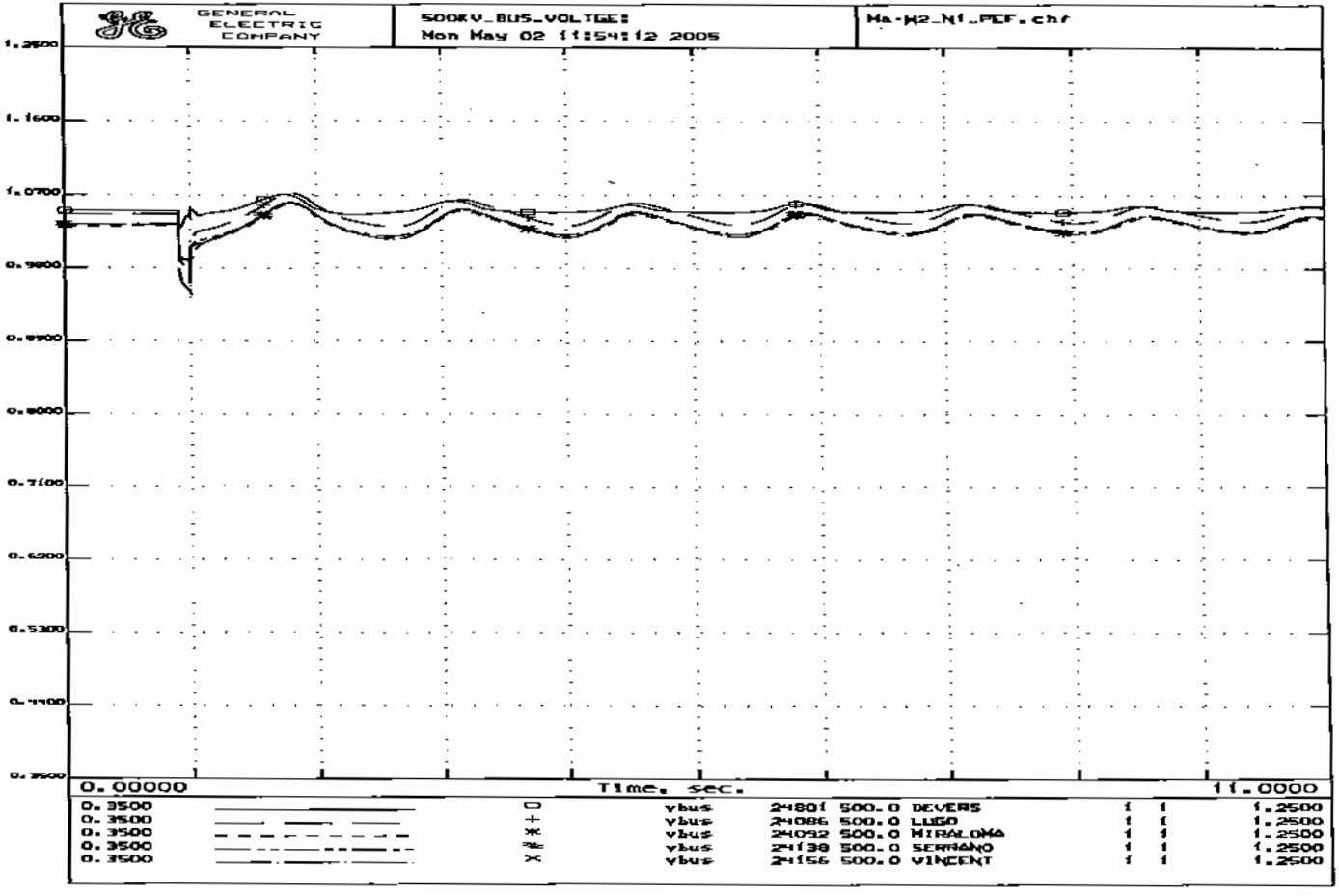
GENERAL ELECTRIC COMPANY
500KV_BUS_VOLTGE:
Mon May 02 11:54:12 2005
Ma-M2_N1_PEF.chf
1.2800
1.1600
1.0700
0.9800
0.8900
0.8000
0.7100
0.6200
0.5300
0.4400
0.3500
0.00000
Time, sec.
11.0000
0.3500 vbus 24801 500.0 DEVERS 1 1 1.2500
0.3500 vbus 24086 500.0 LUGO 1 1 1.2500
0.3500 vbus 24092 500.0 MIRALOMA 1 1 1.2500
0.3500 vbus 24138 500.0 SERRANO 1 1 1.2500
0.3500 vbus 24156 500.0 VINCENT 1 1 1.2500

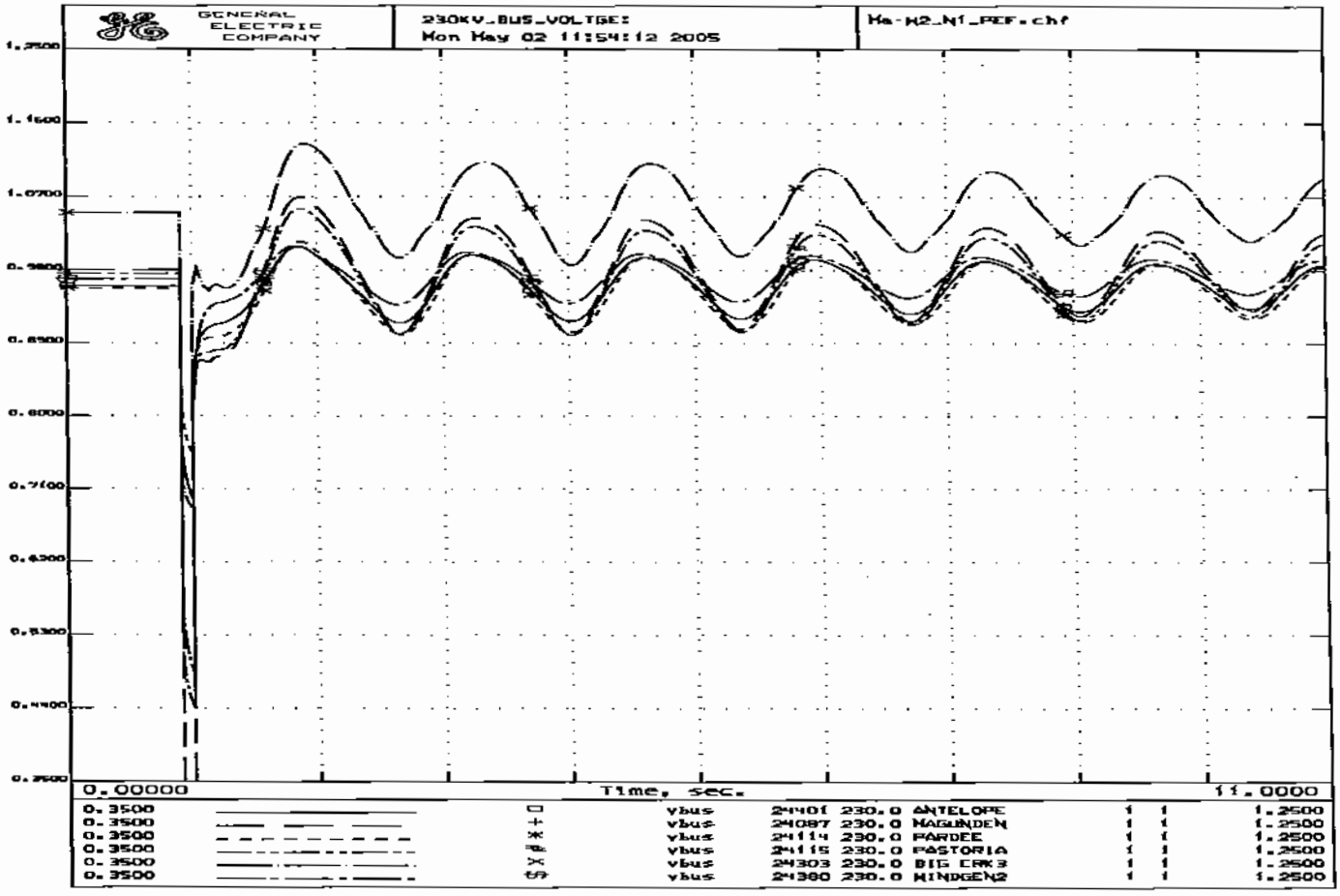
GENERAL ELECTRIC COMPANY
230KV_BUS_VOLTGE:
Mon May 02 11:54:12 2005
Ma-M2_N1_REF.chf
1.2500
1.1500
1.0500
0.9500
0.8500
0.8000
0.7500
0.6500
0.5500
0.4500
0.3500
0.00000
Time, sec.
11.0000
0.3500 vbus 24401 230.0 ANTELOPE 1 1 1.2500
0.3500 vbus 24087 230.0 MAGUNDEN 1 1 1.2500
0.3500 vbus 24114 230.0 PARDEE 1 1 1.2500
0.3500 vbus 24115 230.0 PASTORIA 1 1 1.2500
0.3500 vbus 24303 230.0 BIG CRK3 1 1 1.2500
0.3500 vbus 24380 230.0 MINDGEN2 1 1 1.2500

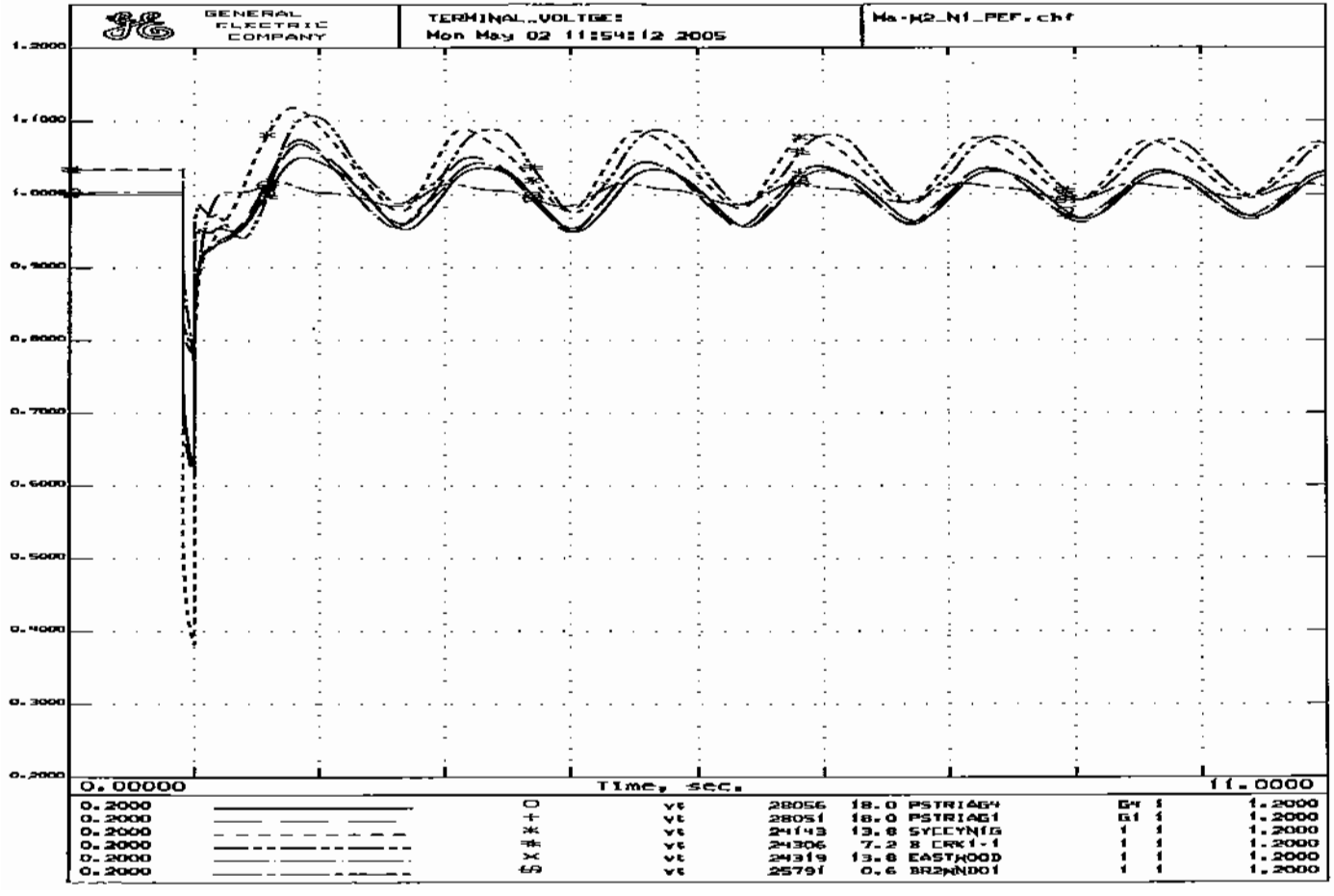
GENERAL ELECTRIC COMPANY
TERMINAL VOLTGE:
Mon May 02 11:54:12 2005
Ma-M2_N1_PEF.chf
1.2000
1.1000
1.0000
0.9000
0.8000
0.7000
0.6000
0.5000
0.4000
0.3000
0.2000
0.00000
Time, sec.
11.0000
0.2000 O vt 28056 18.0 PSTRIAG4 G4 1 1.2000
0.2000 + vt 28051 18.0 PSTRIAG1 G1 1 1.2000
0.2000 * vt 24143 13.8 SYCCYNIG 1 1 1.2000
0.2000 # vt 24306 7.2 8 CRK1-1 1 1 1.2000
0.2000 X vt 24319 13.8 EASTWOOD 1 1 1.2000
0.2000 vt 25791 0.6 BR2WNDO1 1 1 1.2000

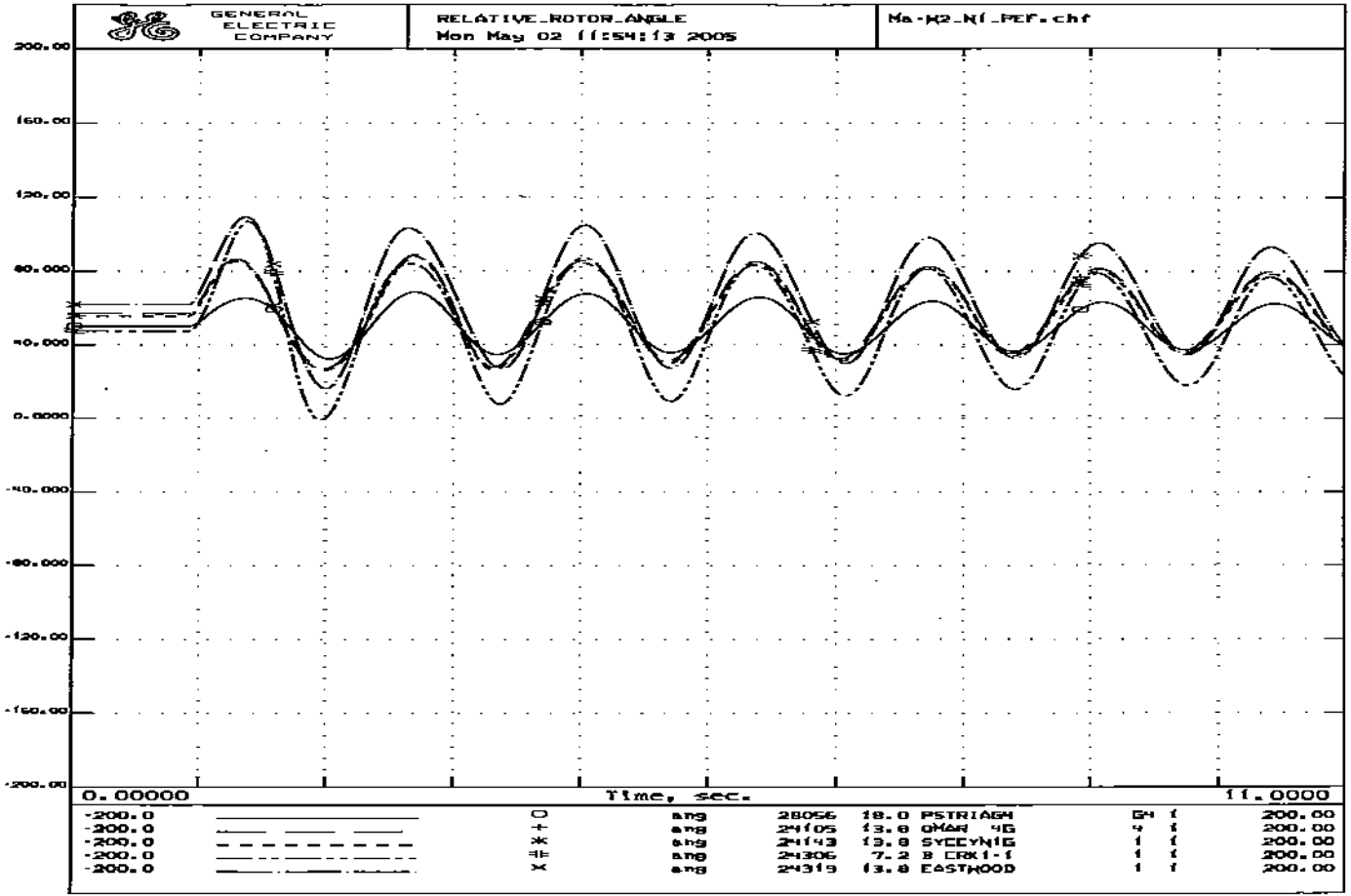
GENERAL ELECTRIC COMPANY
RELATIVE_ROTOR_ANGLE
Mon May 02 11:54:13 2005
Ma-M2_N1_PEF.chf
200.00
160.00
120.00
80.000
40.000
0.0000
-40.000
-80.000
-120.00
-160.00
-200.00
0.00000
Time, sec.
11.0000
-200.0 ○ ang 28056 18.0 PSTRIAGM GH 1 200.00
-200.0 + ang 24105 13.8 OMAR 4G 4 1 200.00
-200.0 * ang 24143 13.8 SYCCYN1G 1 1 200.00
-200.0 ⊞ ang 24306 7.2 8 CRK1-1 1 1 200.00
-200.0 × ang 24319 13.8 EASTWOOD 1 1 200.00

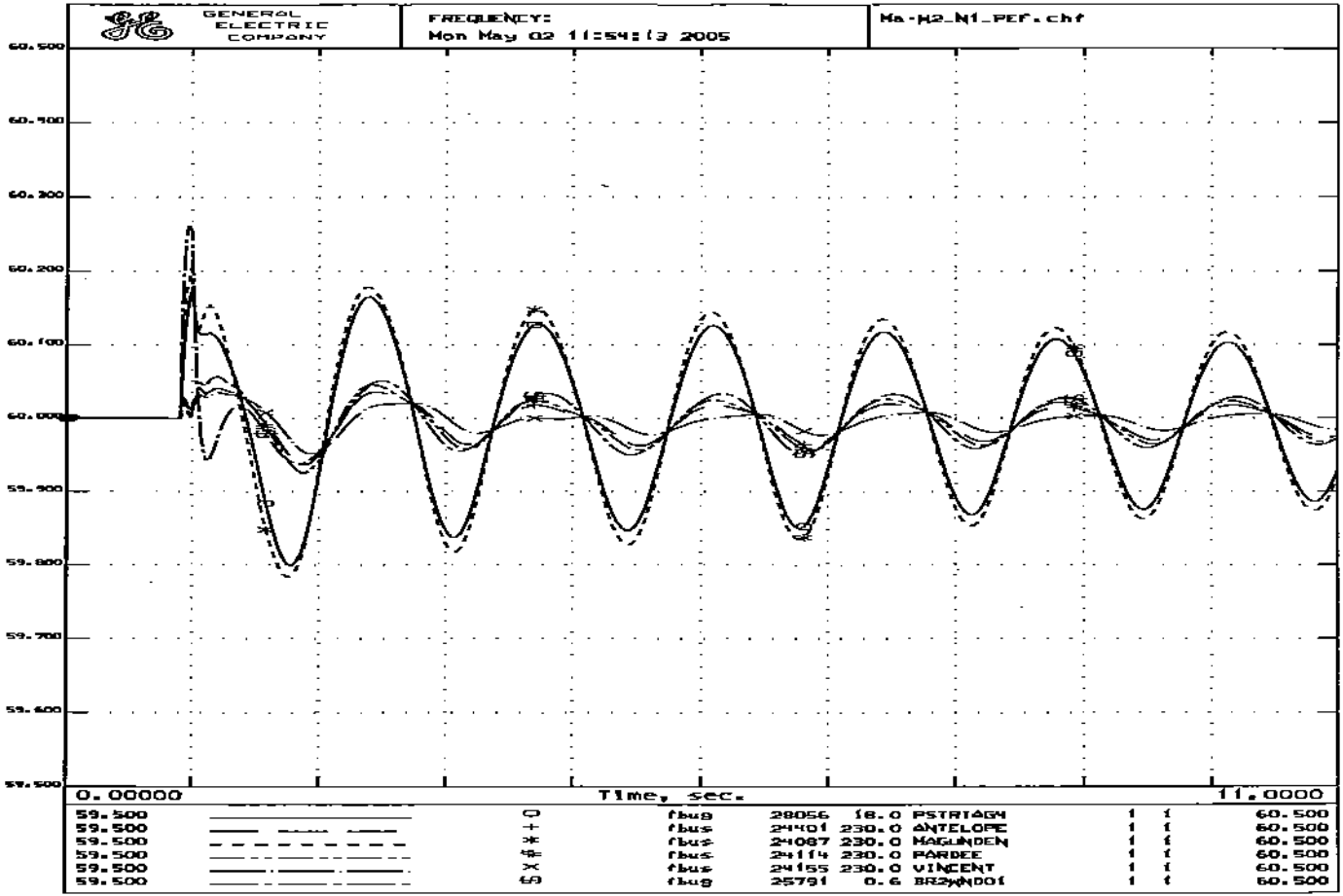
GENERAL ELECTRIC COMPANY
FREQUENCY:
Mon May 02 11:54:13 2005
Ma-M2_N1_PEF.chf
60.500
60.400
60.300
60.200
60.100
60.000
59.900
59.800
59.700
59.600
59.500
0.00000
Time, sec.
11.0000
59.500 ○ fbus 28056 18.0 PSTRIAGM 1 1 60.500
59.500 + fbus 24101 230.0 ANTELOPE 1 1 60.500
59.500 * fbus 24087 230.0 MAGUNDEN 1 1 60.500
59.500 # fbus 24114 230.0 PARDEE 1 1 60.500
59.500 × fbus 24155 230.0 VINCENT 1 1 60.500
59.500 ◊ fbus 25791 0.6 BRAWNDOI 1 1 60.500

```
PostPEF_High_SOM.sav
PostPEF.dyd
'TITLE
Calpine Pastoria Add Stability Study: Loss of One 230-KV Line
6-CYCLE 3-Phase Fault at Mesa 230kV Bus
N-1 OUTAGE: Mesa-Antelope 230kV Line
SYSTEM STABILITY CASE - Me-A_N1_PostPEF.swt
PostPEF_High_SOM.sav + PostPEF.dyd + Me-A_N1_PostPEF.swt
RUN 10.0
CC
CC   ***CALPINE PASTORIA ADD DYNAMIC STABILITY ASSESSMENT***
CC   APPLY A 3-PHASE FAULT ON THE MESA 230-KV BUS
FB   0.0 "MESA CAL" 230
CC
CC   CLEAR FAULT IN 6 CYCLES
CFB  6.0 "MESA CAL" 230
CC
CC   REMOVE MESA-ANTELOPE 230-KV LINE
DL   6.0 "MESA CAL" 230, "ANTELOPE" 230, "1 "
```

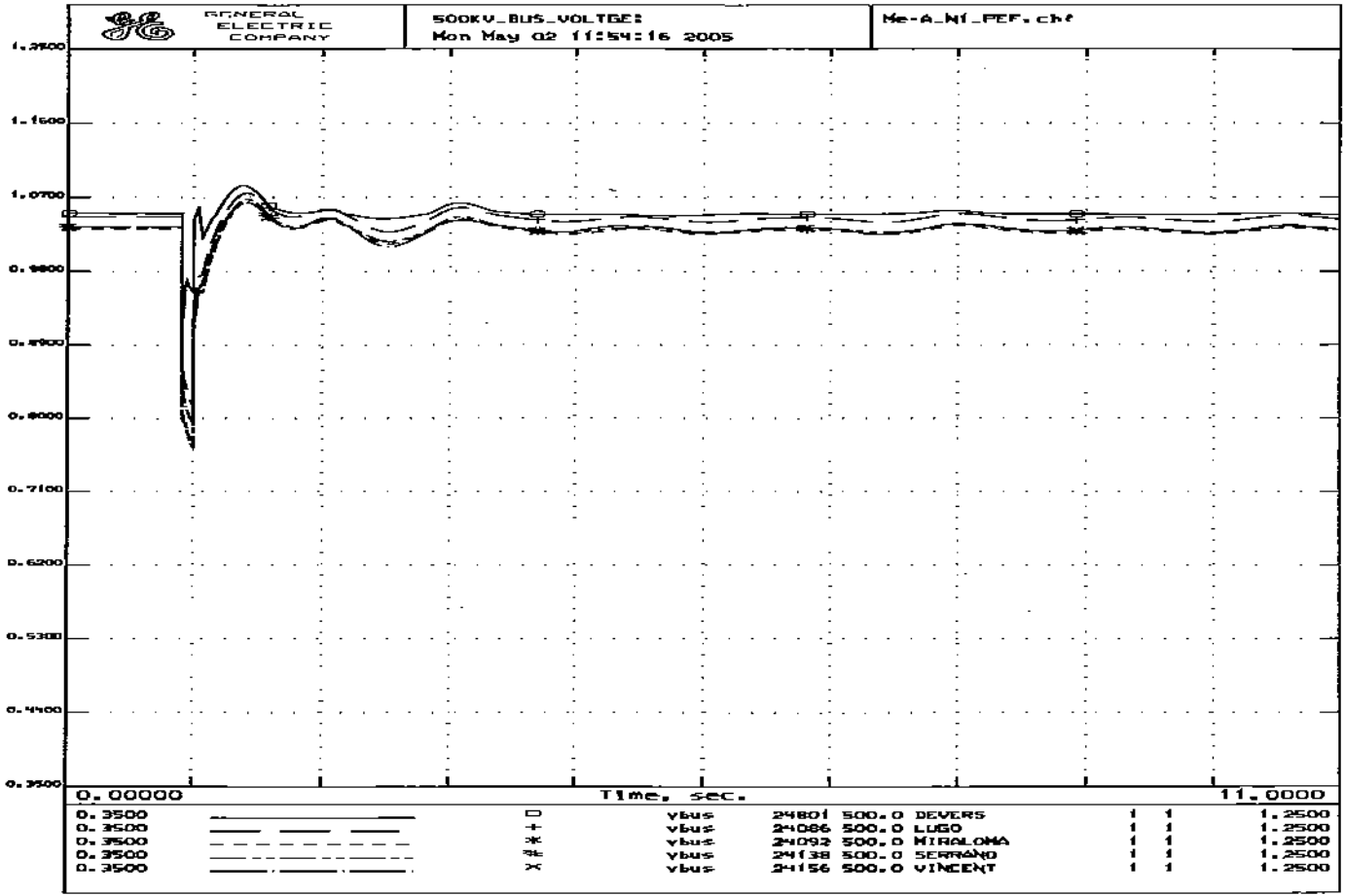
GENERAL ELECTRIC COMPANY
500KV_BUS_VOLTGE:
Mon May 02 11:54:16 2005
Me-A_NI_PEF.chf
1.3500
1.1600
1.0700
0.9800
0.8900
0.8000
0.7100
0.6200
0.5300
0.4400
0.3500
0.00000
Time, sec.
11.0000
0.3500 □ vbus 24801 500.0 DEVERS 1 1 1.2500
0.3500 + vbus 24086 500.0 LUGO 1 1 1.2500
0.3500 * vbus 24092 500.0 MIRALOMA 1 1 1.2500
0.3500 * vbus 24138 500.0 SERRANO 1 1 1.2500
0.3500 × vbus 24156 500.0 VINCENT 1 1 1.2500

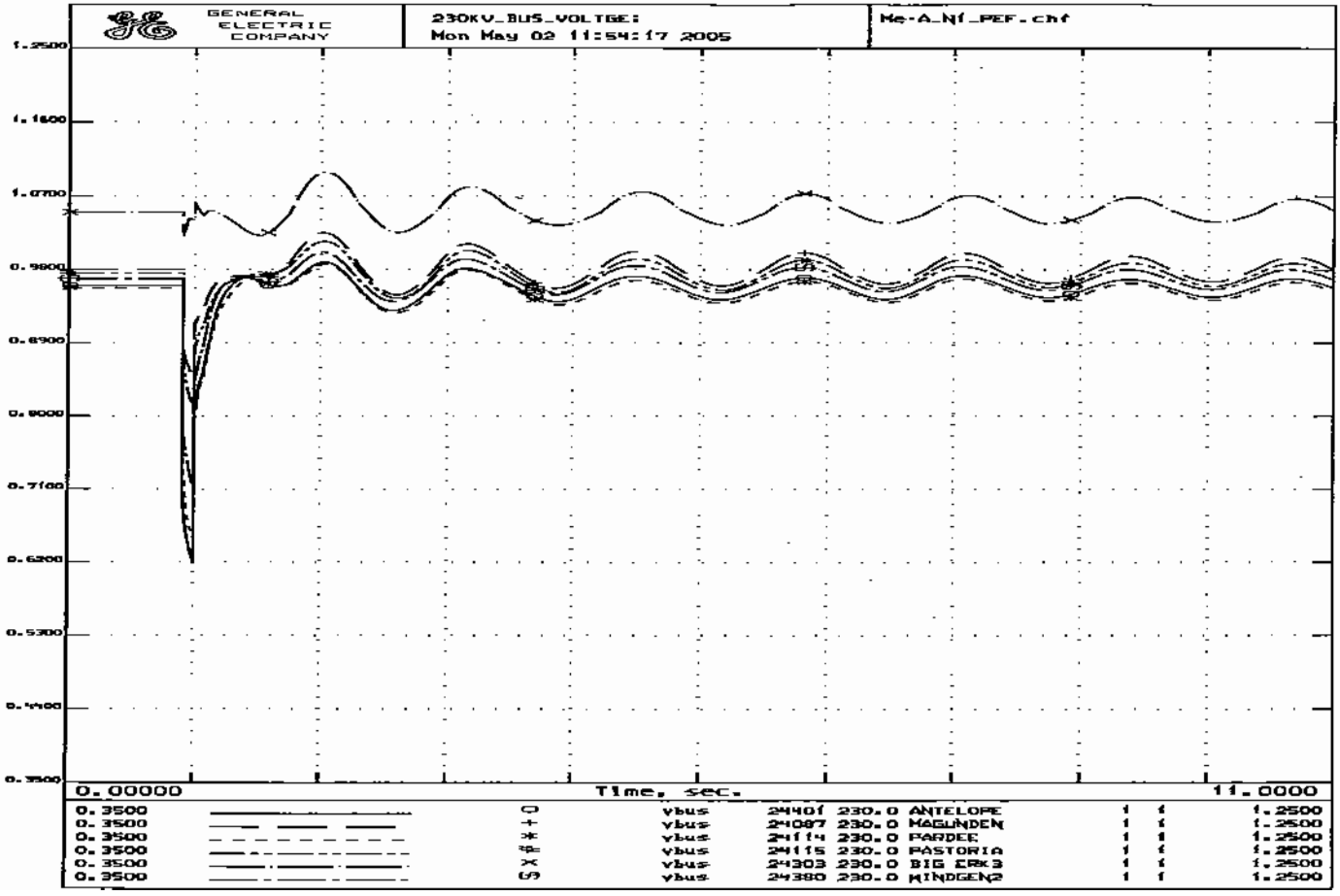
GENERAL ELECTRIC COMPANY
230KV_BUS_VOLTGE:
Mon May 02 11:54:17 2005
Me-A_Nf_PEF.chf
1.2500
1.1600
1.0700
0.9800
0.8900
0.8000
0.7100
0.6200
0.5300
0.4400
0.3500
0.00000
Time, sec.
11.0000
0.3500 ○ vbus 24401 230.0 ANTELOPE 1 1 1.2500
0.3500 + vbus 24087 230.0 MAGUNDEN 1 1 1.2500
0.3500 * vbus 24114 230.0 PARDEE 1 1 1.2500
0.3500 # vbus 24115 230.0 PASTORIA 1 1 1.2500
0.3500 X vbus 24303 230.0 BIG CRK3 1 1 1.2500
0.3500 ◎ vbus 24380 230.0 MINDGEN2 1 1 1.2500

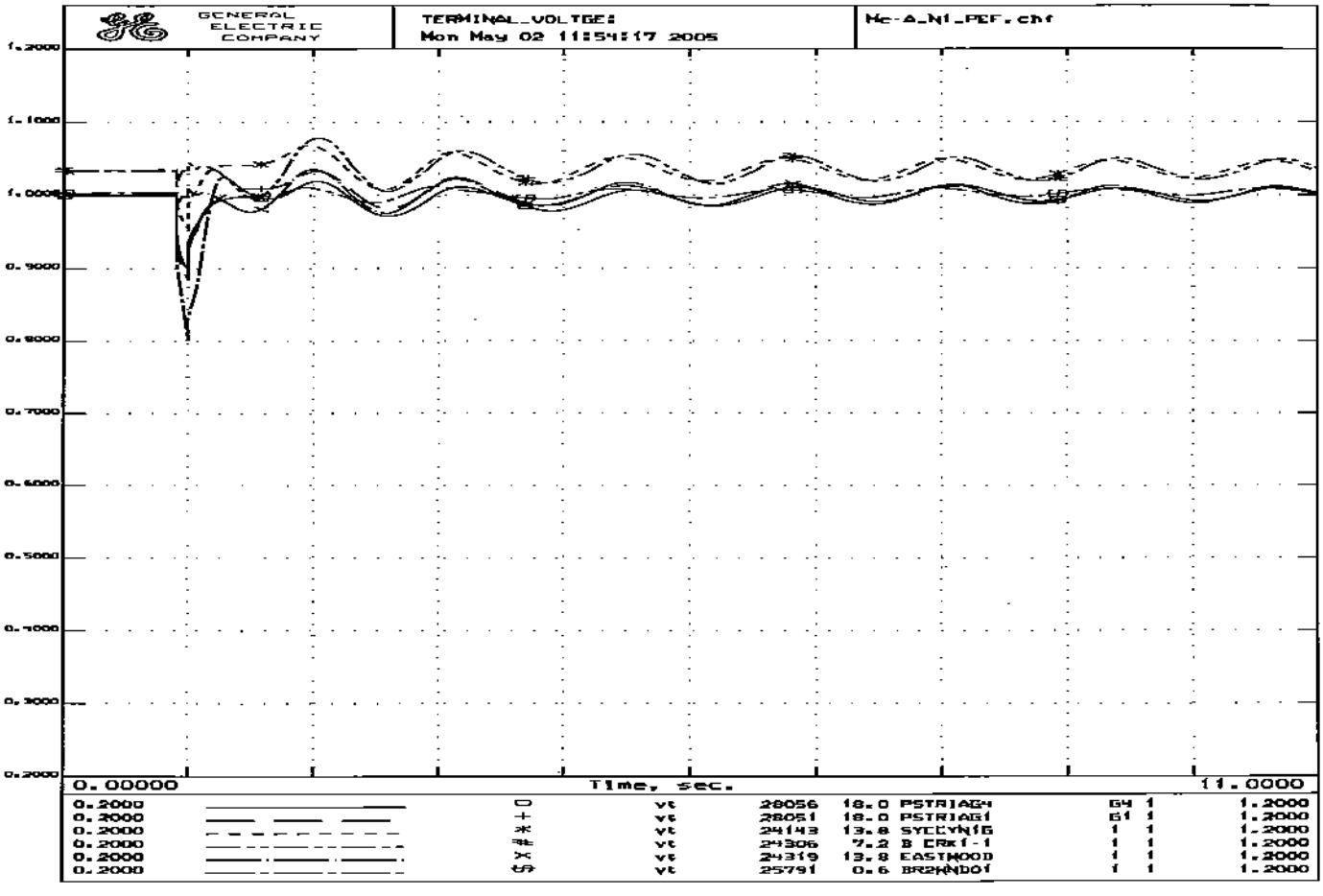
GENERAL ELECTRIC COMPANY
TERMINAL_VOLTGE:
Mon May 02 11:54:17 2005
Mc-A_N1_PEF.chf
1.2000
1.1000
1.0000
0.9000
0.8000
0.7000
0.6000
0.5000
0.4000
0.3000
0.2000
0.00000
Time, sec.
11.0000
0.2000 vt 28056 18.0 PSTRIAG4 G4 1 1.2000
0.2000 vt 28051 18.0 PSTRIAG1 G1 1 1.2000
0.2000 vt 24143 13.8 SYCCYN16 1 1 1.2000
0.2000 vt 24306 7.2 B CRK1-1 1 1 1.2000
0.2000 vt 24319 13.8 EASTWOOD 1 1 1.2000
0.2000 vt 25791 0.6 BR2WNDO1 1 1 1.2000

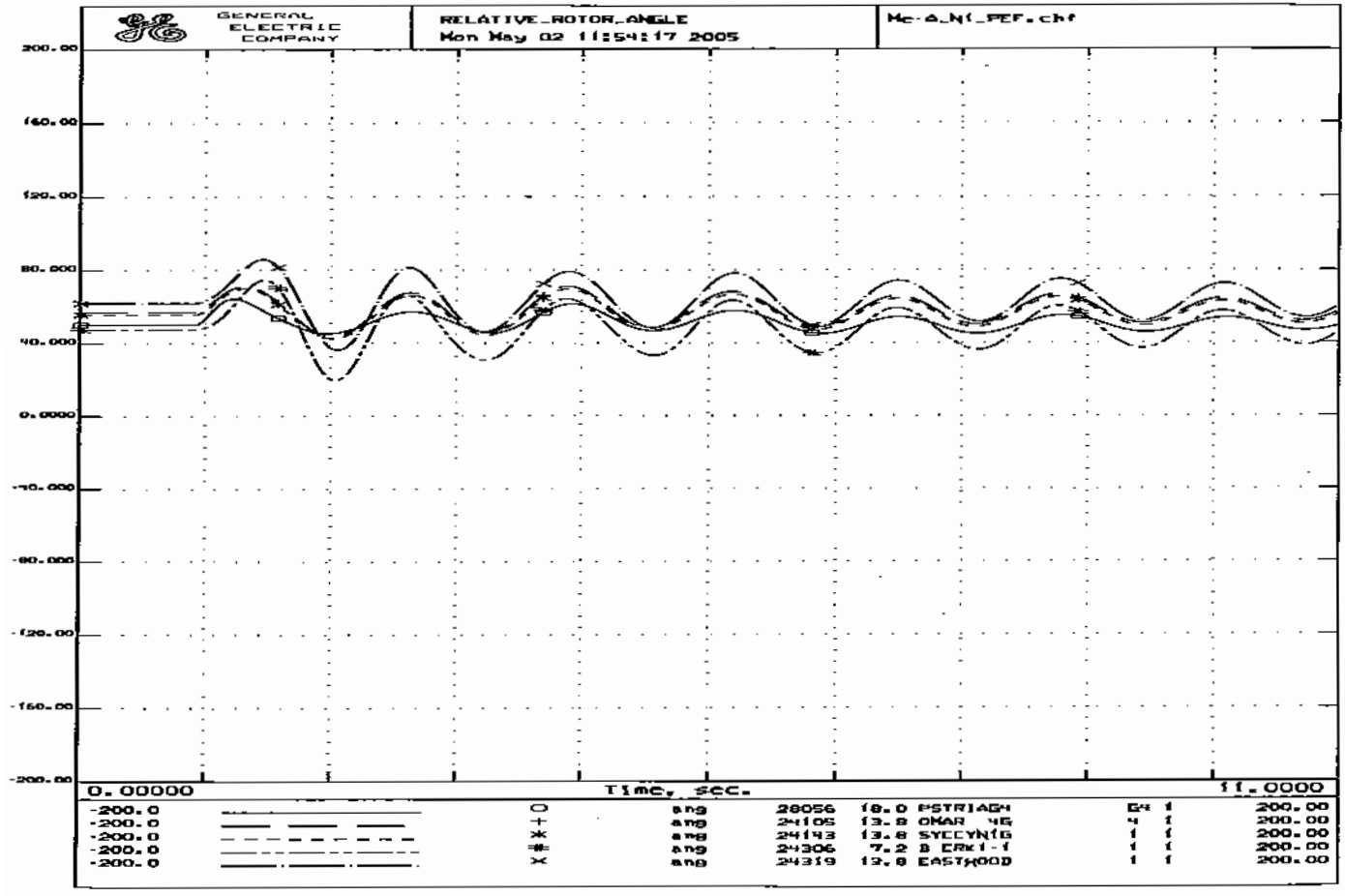
GENERAL ELECTRIC COMPANY
RELATIVE_ROTOR_ANGLE
Mon May 02 11:54:17 2005
Me-A_N1_PEF.chf
200.00
160.00
120.00
80.000
40.000
0.0000
-40.000
-80.000
-120.00
-160.00
-200.00
0.00000
Time, sec.
11.0000
-200.0 ang 28056 18.0 PSTRIAGN 64 1 200.00
-200.0 ang 24105 13.8 OMAR 46 4 1 200.00
-200.0 ang 24143 13.8 SYCCYNIG 1 1 200.00
-200.0 ang 24306 7.2 B ERK1-1 1 1 200.00
-200.0 ang 24319 13.8 EASTWOOD 1 1 200.00

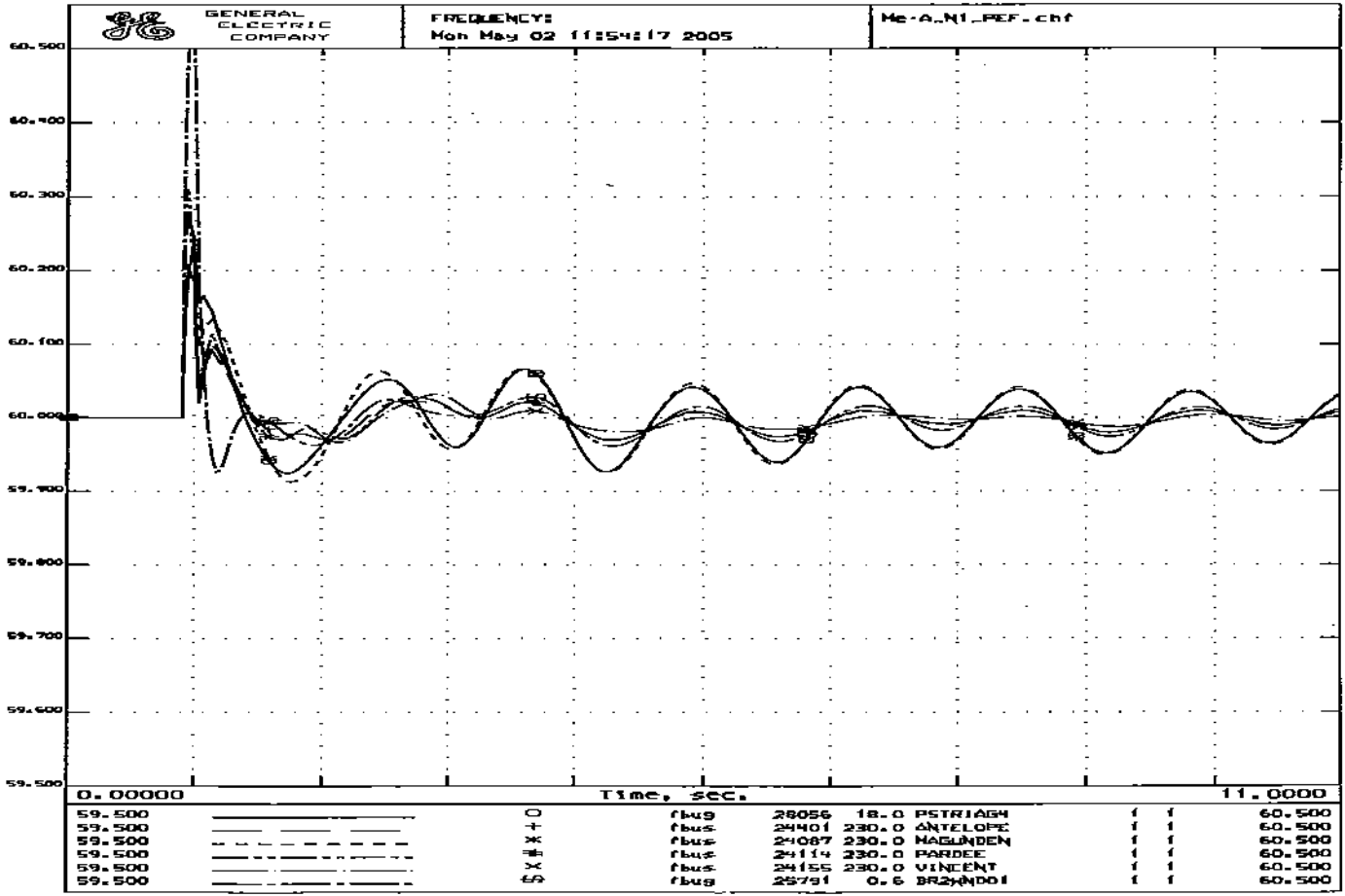
GENERAL ELECTRIC COMPANY
FREQUENCY:
Mon May 02 11:54:17 2005
Me-A_N1_REF.chf
60.500
60.400
60.300
60.200
60.100
60.000
59.900
59.800
59.700
59.600
59.500
0.00000
Time, sec.
11.0000
59.500 ○ fbus 28056 18.0 PSTRIAG4 1 1 60.500
59.500 + fbus 24401 230.0 ANTELOPE 1 1 60.500
59.500 × fbus 24087 230.0 MAGUNDEN 1 1 60.500
59.500 # fbus 24114 230.0 PARDEE 1 1 60.500
59.500 × fbus 24155 230.0 VINCENT 1 1 60.500
59.500 fbus 25791 0.6 BR2WNDO1 1 1 60.500

```
PostPEF_High_SOM.sav
PostPEF.dyd
TITLE
Calpine Pastoria Add Stability Study: Loss of One 230-KV Line
6-CYCLE 3-Phase Fault at Pardee 230kV Bus
N-1 OUTAGE: Antelope-Pardee 230kV Line
SYSTEM STABILITY CASE - P-A_N1_PostPEF.swt
PostPEF_High_SOM.sav + PostPEF.dyd + P-A_N1_PostPEF.swt
RUN 10.0
CC
CC   ***CALPINE PASTORIA ADD DYNAMIC STABILITY ASSESSMENT***
CC   APPLY A 3-PHASE FAULT ON THE PARDEE 230-KV BUS
FB   0.0 "PARDEE   " 230
CC
CC   CLEAR FAULT IN 6 CYCLES
CFB  6.0 "PARDEE   " 230
CC
CC   REMOVE ANTELOPE-PARDEE 230-KV LINE
DL   6.0 "ANTELOPE" 230. "PARDEE   " 230. "1 "
```

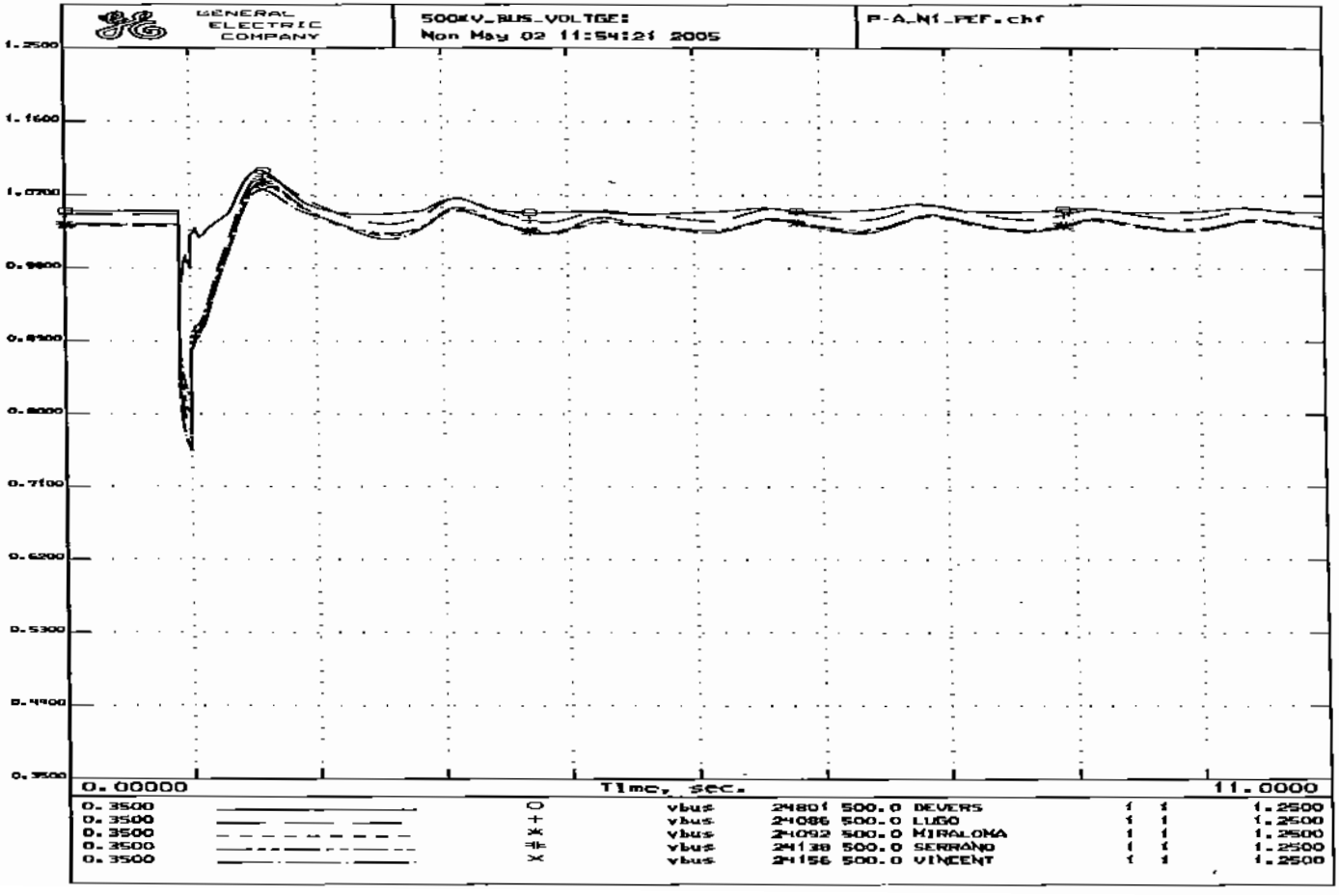
GENERAL ELECTRIC COMPANY
500KV_BUS_VOLTGE:
Mon May 02 11:54:21 2005
P-A_N1_PEF.chf
1.2500
1.1600
1.0700
0.9800
0.8900
0.8000
0.7100
0.6200
0.5300
0.4400
0.3500
0.00000
Time, sec.
11.0000
0.3500 ○ vbus 24801 500.0 DEVERS 1 1 1.2500
0.3500 + vbus 24086 500.0 LUGO 1 1 1.2500
0.3500 ✱ vbus 24092 500.0 MIRALOMA 1 1 1.2500
0.3500 ⋕ vbus 24138 500.0 SERRANO 1 1 1.2500
0.3500 × vbus 24156 500.0 VINCENT 1 1 1.2500

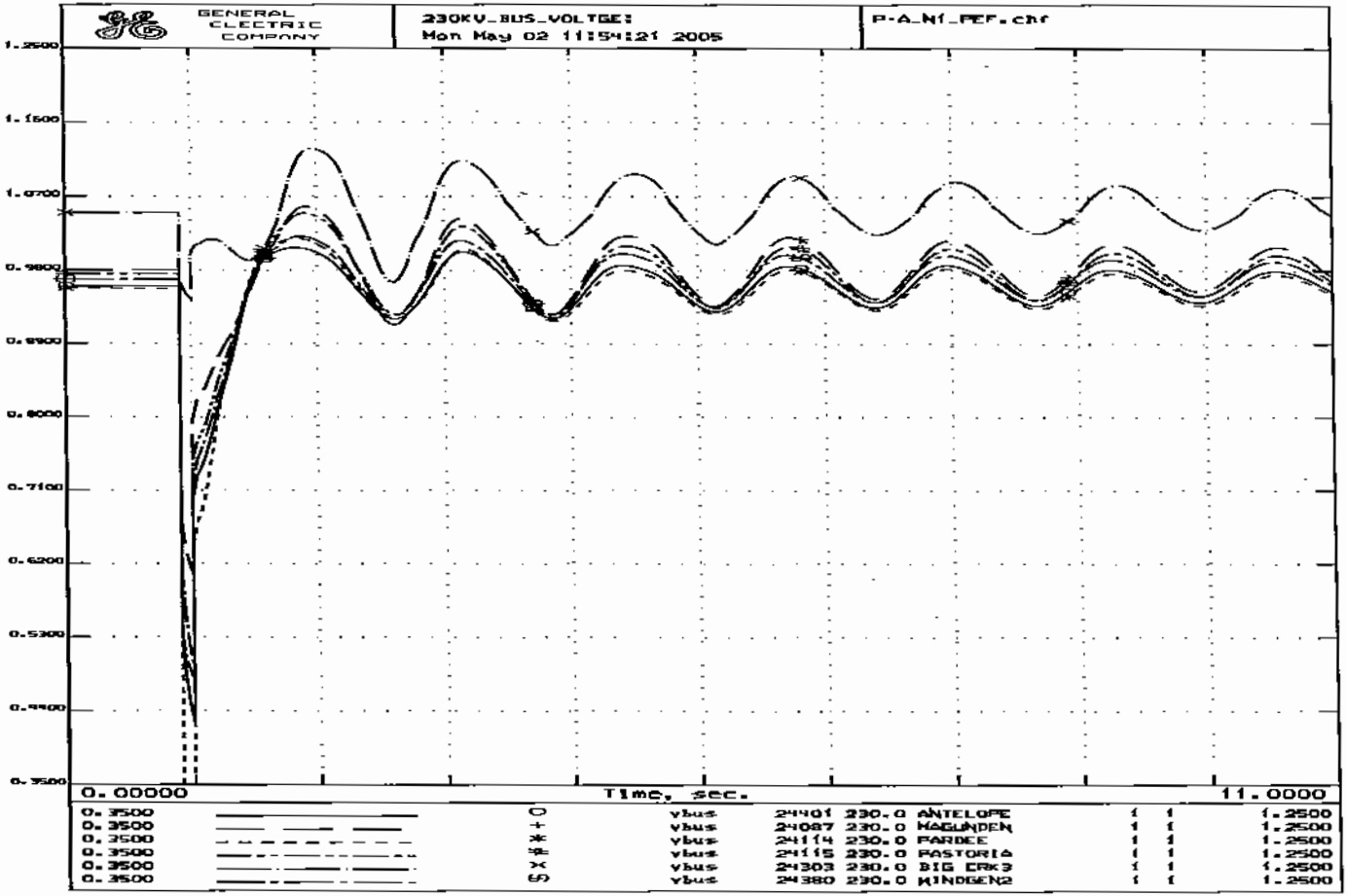
GENERAL ELECTRIC COMPANY
230KV_BUS_VOLTGE:
Mon May 02 11:54:21 2005
P-A_N1_PEF.chf
1.2500
1.1500
1.0700
0.9800
0.8900
0.8000
0.7100
0.6200
0.5300
0.4400
0.3500
0.00000
Time, sec.
11.0000
0.3500 vbus 24401 230.0 ANTELOPE 1 1 1.2500
0.3500 vbus 24087 230.0 MAGUNDEN 1 1 1.2500
0.3500 vbus 24114 230.0 FARDEE 1 1 1.2500
0.3500 vbus 24115 230.0 PASTORIA 1 1 1.2500
0.3500 vbus 24303 230.0 BIG CRK3 1 1 1.2500
0.3500 vbus 24380 230.0 MINDGEN2 1 1 1.2500

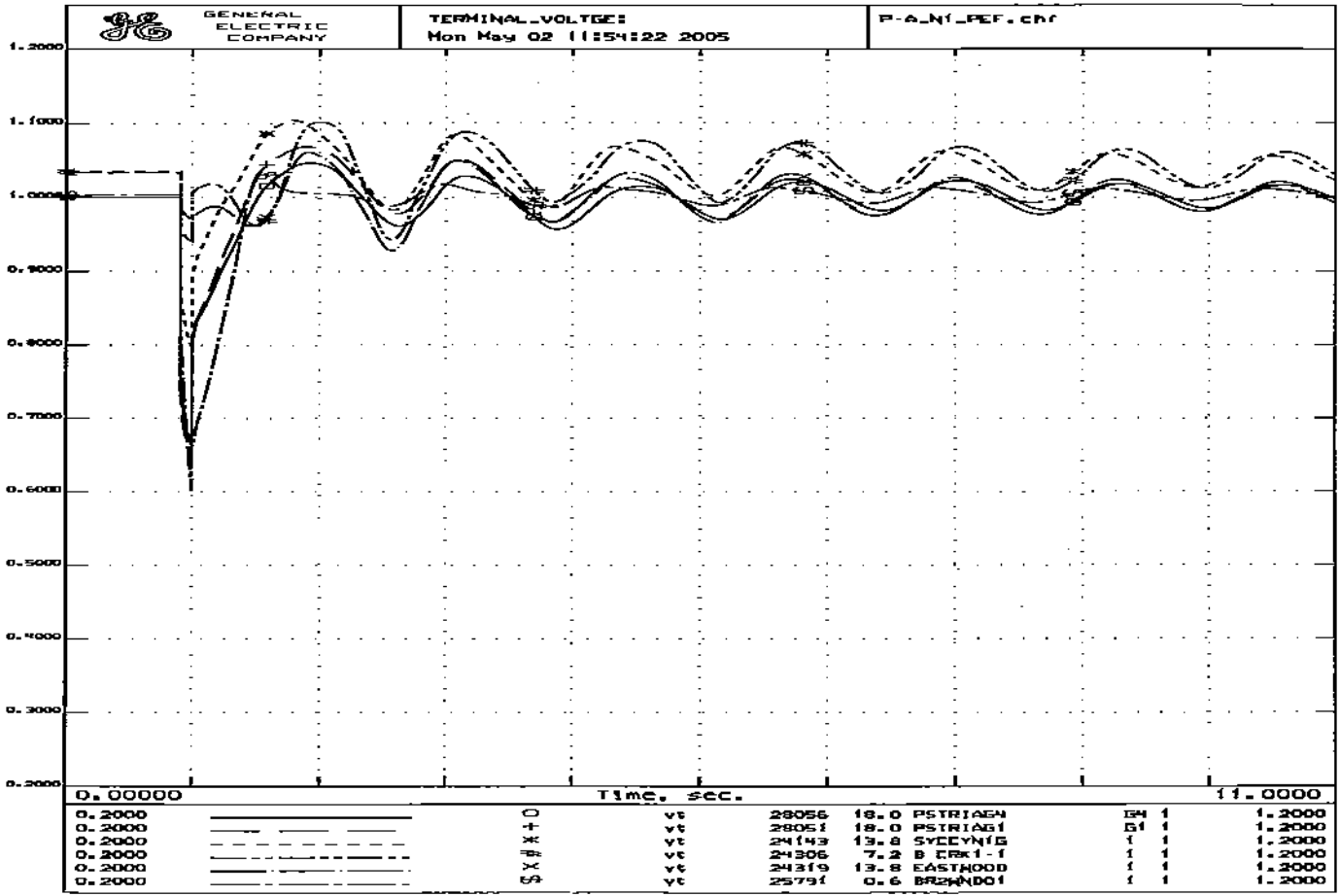
GENERAL ELECTRIC COMPANY
TERMINAL_VOLTGE:
Mon May 02 11:54:22 2005
P-A_N1_PEF.chf
1.2000
1.1000
1.0000
0.9000
0.8000
0.7000
0.6000
0.5000
0.4000
0.3000
0.2000
0.00000
Time, sec.
11.0000
0.2000 O vt 28056 18.0 PSTRIAGN G4 1 1.2000
0.2000 + vt 28051 18.0 PSTRIAG1 G1 1 1.2000
0.2000 * vt 24143 13.8 SYCCYN15 1 1 1.2000
0.2000 # vt 24306 7.2 B CRK1-1 1 1 1.2000
0.2000 X vt 24319 13.8 EASTWOOD 1 1 1.2000
0.2000 vt 25791 0.6 BRAWND01 1 1 1.2000

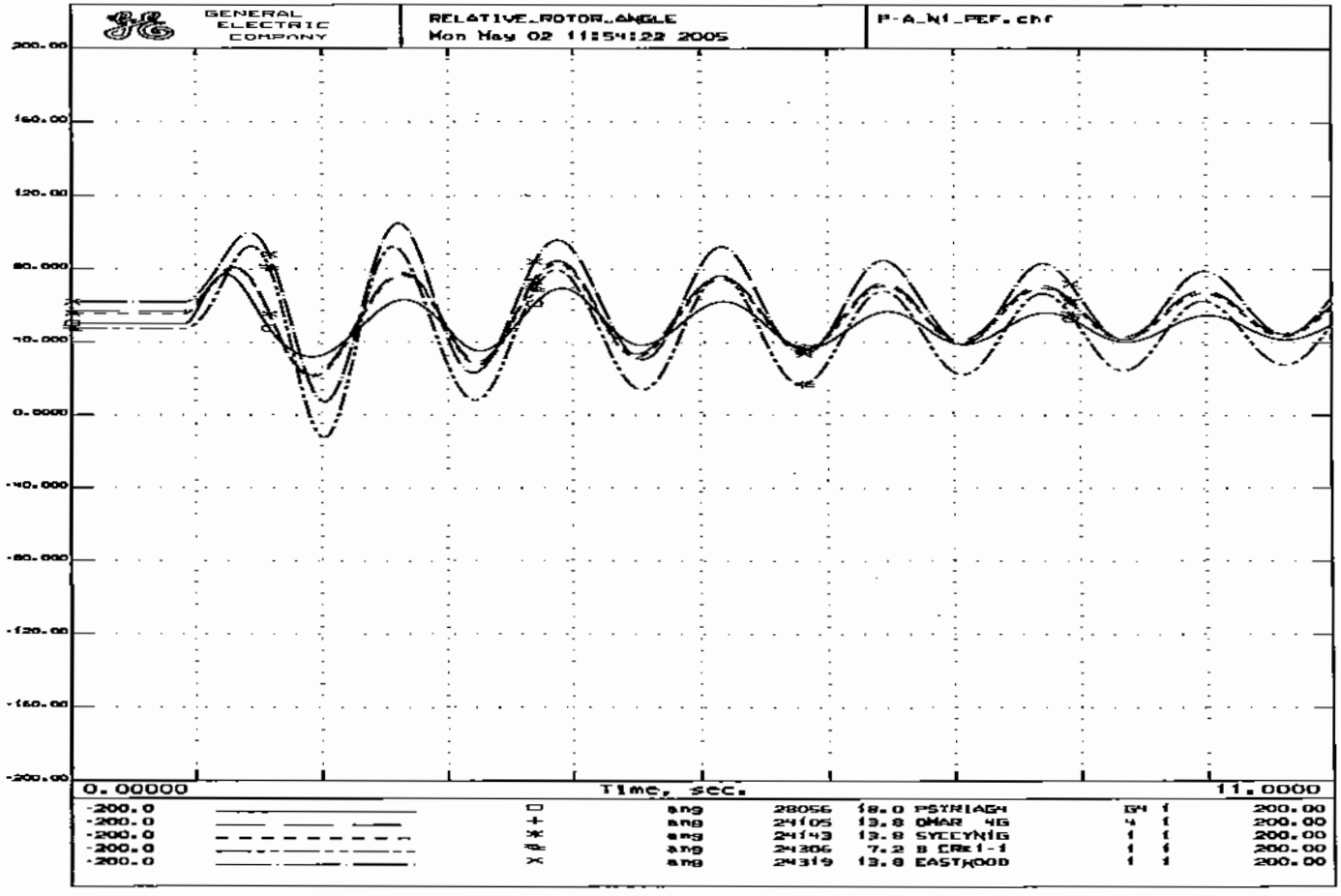
GENERAL ELECTRIC COMPANY
RELATIVE_ROTOR_ANGLE
Mon May 02 11:54:22 2005
P-A_N1_PEF.chf
200.00
160.00
120.00
80.000
40.000
0.0000
-40.000
-80.000
-120.00
-160.00
-200.00
0.00000
Time, sec.
11.0000
-200.0 □ ang 28056 18.0 PSYNIAGH GH 1 200.00
-200.0 + ang 24105 13.8 OMAR 4G 4 1 200.00
-200.0 * ang 24143 13.8 SYCCYNIG 1 1 200.00
-200.0 ang 24306 7.2 B CRK1-1 1 1 200.00
-200.0 × ang 24319 13.8 EASTWOOD 1 1 200.00

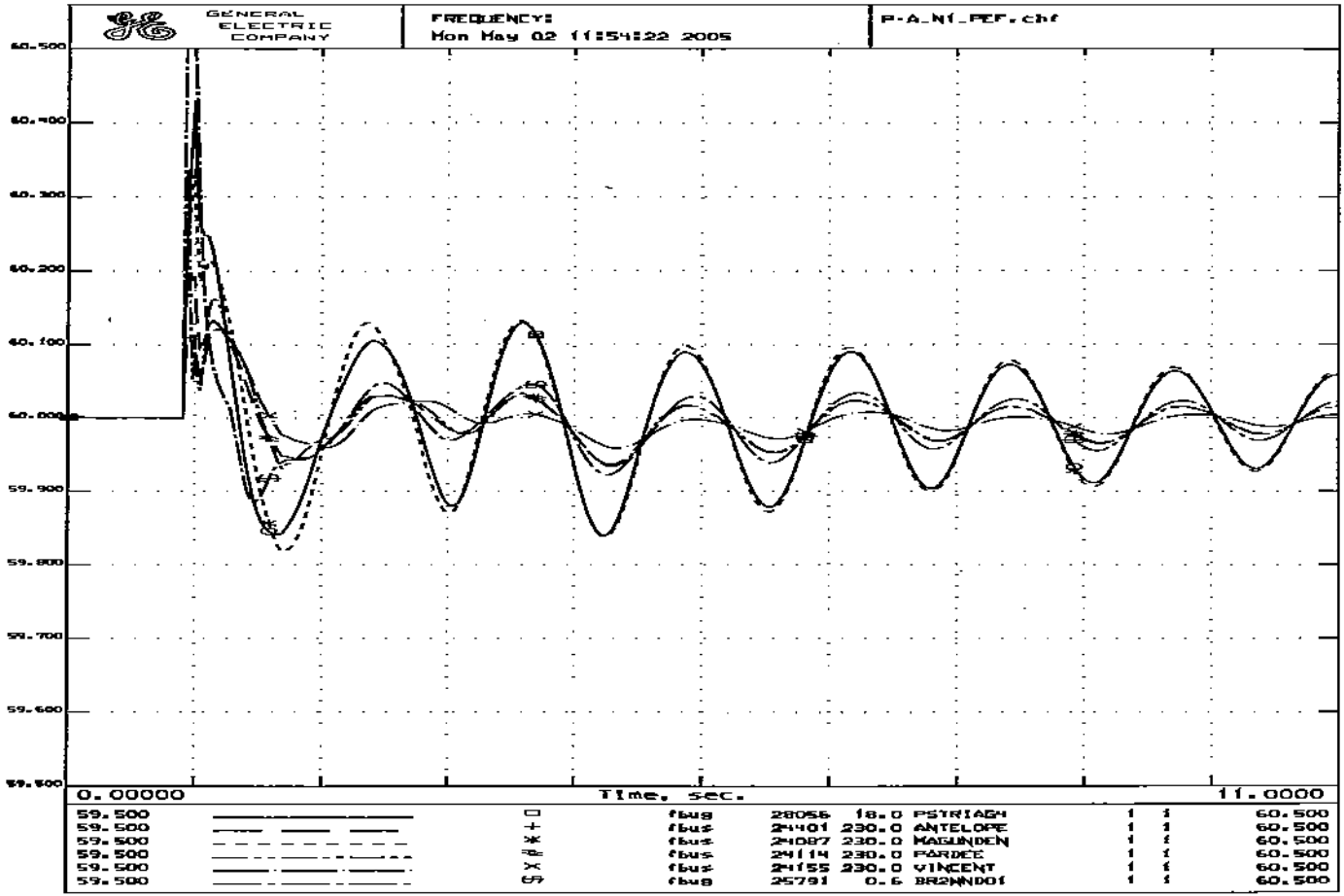
GENERAL ELECTRIC COMPANY
FREQUENCY:
Mon May 02 11:54:22 2005
P-A_N1_REF.chf
60.500
60.400
60.300
60.200
60.100
60.000
59.900
59.800
59.700
59.600
59.500
0.00000
Time, sec.
11.0000
59.500 □ fbus 28056 18.0 PSTRIAGH 1 1 60.500
59.500 + fbus 24401 230.0 ANTELOPE 1 1 60.500
59.500 * fbus 24087 230.0 MAGUNDEN 1 1 60.500
59.500 fbus 24114 230.0 PARDEE 1 1 60.500
59.500 X fbus 24155 230.0 VINCENT 1 1 60.500
59.500 fbus 25791 0.6 BR2NNDO1 1 1 60.500

```
PostPEF_High_SOM.sav
PostPEF.dyd
TITLE
Calpine Pastoria Add Stability Study: Loss of One 230-KV Line
6-CYCLE 3-Phase Fault at Pastoria 230kV Bus
N-1 OUTAGE: Bailey-Pastoria 230kV Line
SYSTEM STABILITY CASE - Pas-B_N1_PostPEF.swt
PostPEF_High_SOM.sav + PostPEF.dyd + Pas-B_N1_PostPEF.swt
RUN 10.0
CC
CC   ***CALPINE PASTORIA ADD DYNAMIC STABILITY ASSESSMENT***
CC   APPLY A 3-PHASE FAULT ON THE PASTORIA 230-KV BUS
FB   0.0 "PASTORIA" 230
CC
CC   CLEAR FAULT IN 6 CYCLES
CFB  6.0 "PASTORIA" 230
CC
CC   REMOVE BAILEY-PASTORIA 230-KV LINE
DL   6.0 "BAILEY  " 230. "PASTORIA" 230. "1 "
```

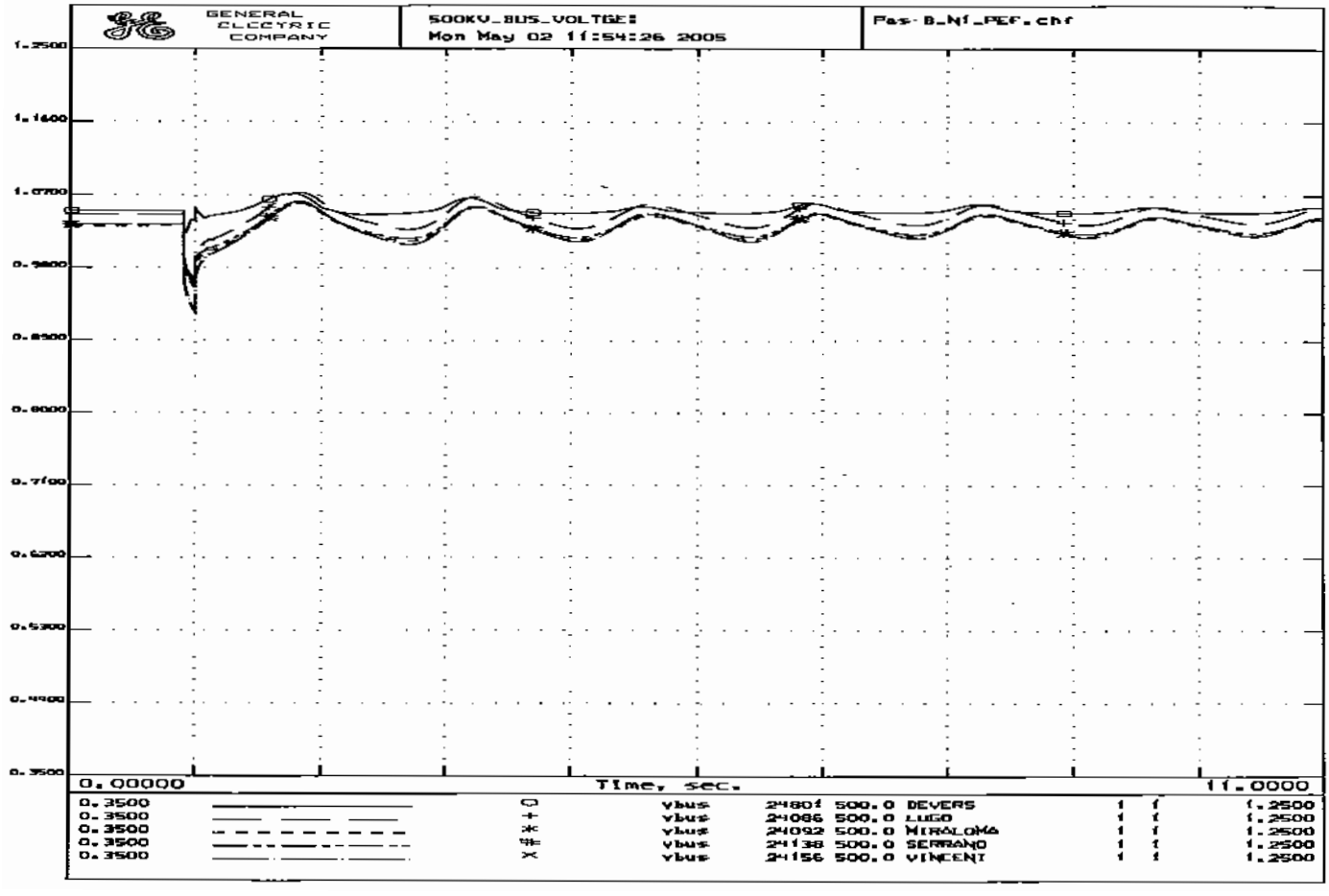
GENERAL ELECTRIC COMPANY
500KV_BUS_VOLTGE:
Mon May 02 11:54:26 2005
Pas-B_Nf_PEF.chf
1.2500
1.1600
1.0700
0.9800
0.8900
0.8000
0.7100
0.6200
0.5300
0.4400
0.3500
0.00000
Time, sec.
11.0000
0.3500 ○ vbus 24801 500.0 DEVERS 1 1 1.2500
0.3500 + vbus 24086 500.0 LUGO 1 1 1.2500
0.3500 * vbus 24092 500.0 MIRALOMA 1 1 1.2500
0.3500 # vbus 24138 500.0 SERRANO 1 1 1.2500
0.3500 X vbus 24156 500.0 VINCENT 1 1 1.2500

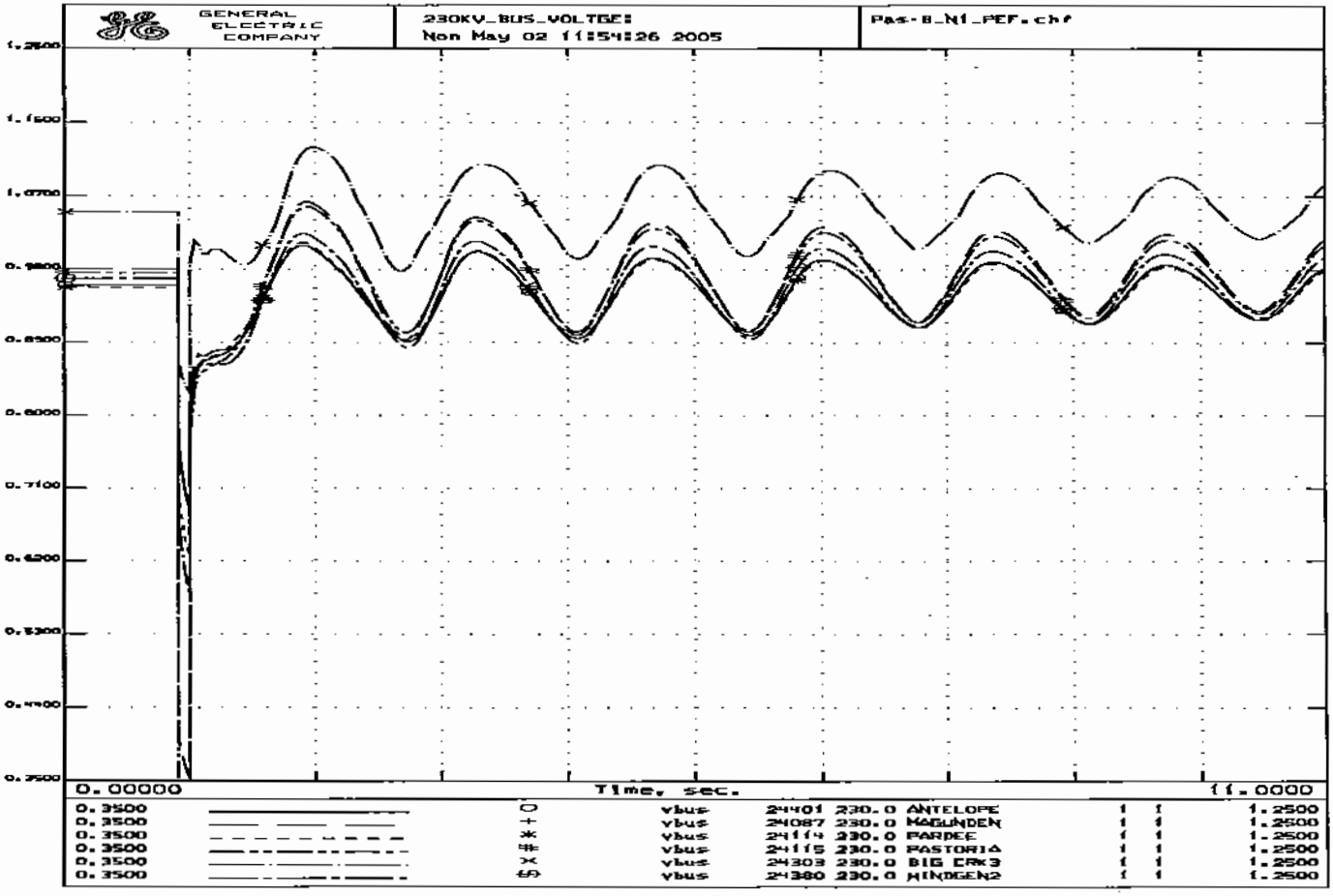
GENERAL ELECTRIC COMPANY
230KV_BUS_VOLTGE:
Non May 02 11:54:26 2005
Pas-8_N1_PEF.chf
1.2500
1.1500
1.0700
0.9800
0.8500
0.6000
0.7100
0.6200
0.5300
0.4400
0.2500
0.00000
Time, sec.
11.0000
0.3500 ○ vbus 24401 230.0 ANTELOPE 1 1 1.2500
0.3500 + vbus 24087 230.0 MAGUNDEN 1 1 1.2500
0.3500 * vbus 24114 230.0 PARDEE 1 1 1.2500
0.3500 # vbus 24115 230.0 PASTORIA 1 1 1.2500
0.3500 × vbus 24303 230.0 BIG CRK3 1 1 1.2500
0.3500 vbus 24380 230.0 WINDGEN2 1 1 1.2500

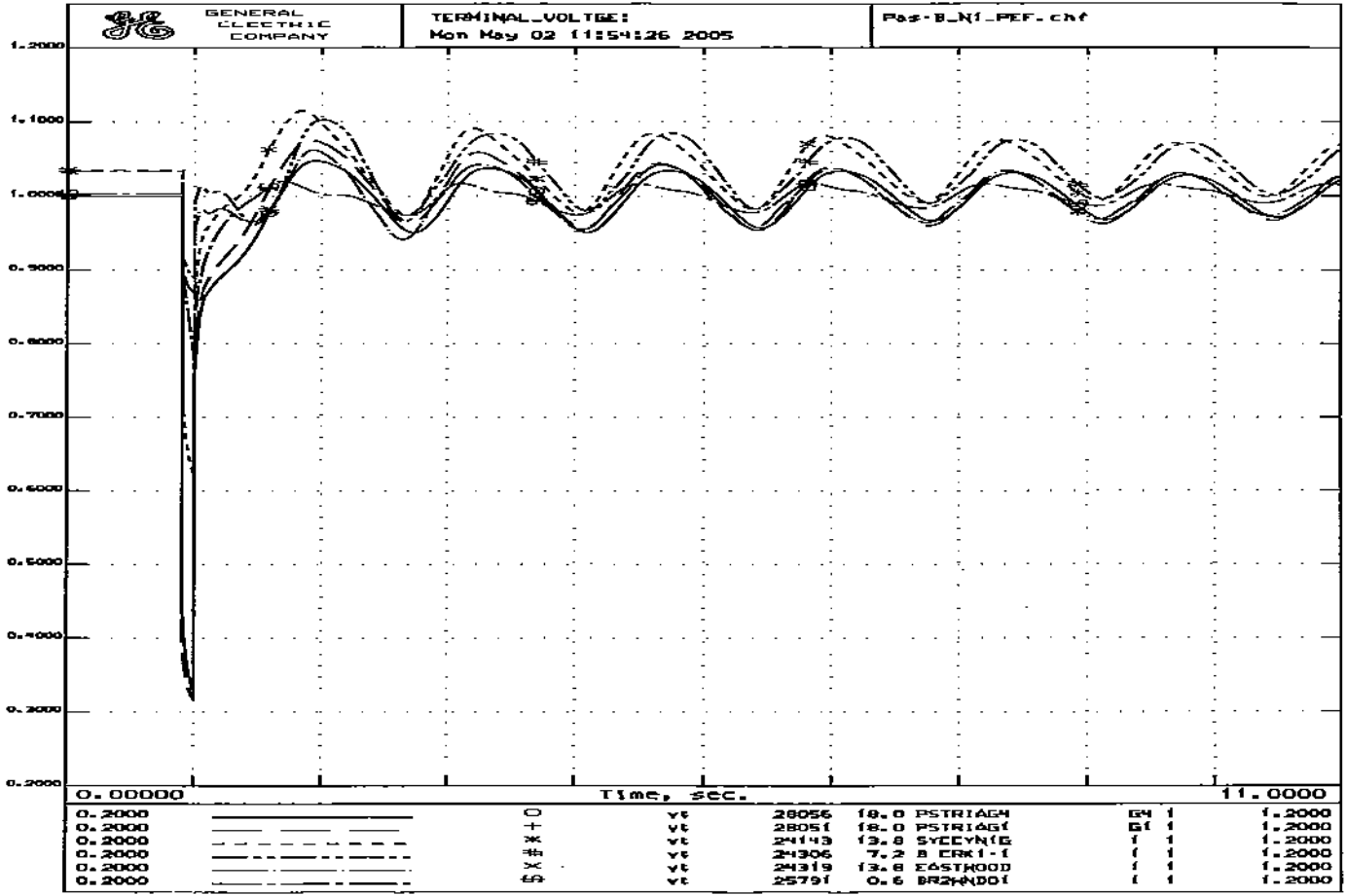
GENERAL ELECTRIC COMPANY
TERMINAL_VOLTGE:
Mon May 02 11:54:26 2005
Pas-B_N1_PEF.chf
1.2000
1.1000
1.0000
0.9000
0.8000
0.7000
0.6000
0.5000
0.4000
0.3000
0.2000
0.00000
Time, sec.
11.0000
0.2000 O vt 28056 18.0 PSTRIAG4 G4 1 1.2000
0.2000 + vt 28051 18.0 PSTRIAG1 G1 1 1.2000
0.2000 * vt 24143 13.8 SYCCYN1G 1 1 1.2000
0.2000 # vt 24306 7.2 B CRK1-1 1 1 1.2000
0.2000 X vt 24319 13.8 EASTWOOD 1 1 1.2000
0.2000 ⊕ vt 25791 0.6 BRZWNDO1 1 1 1.2000

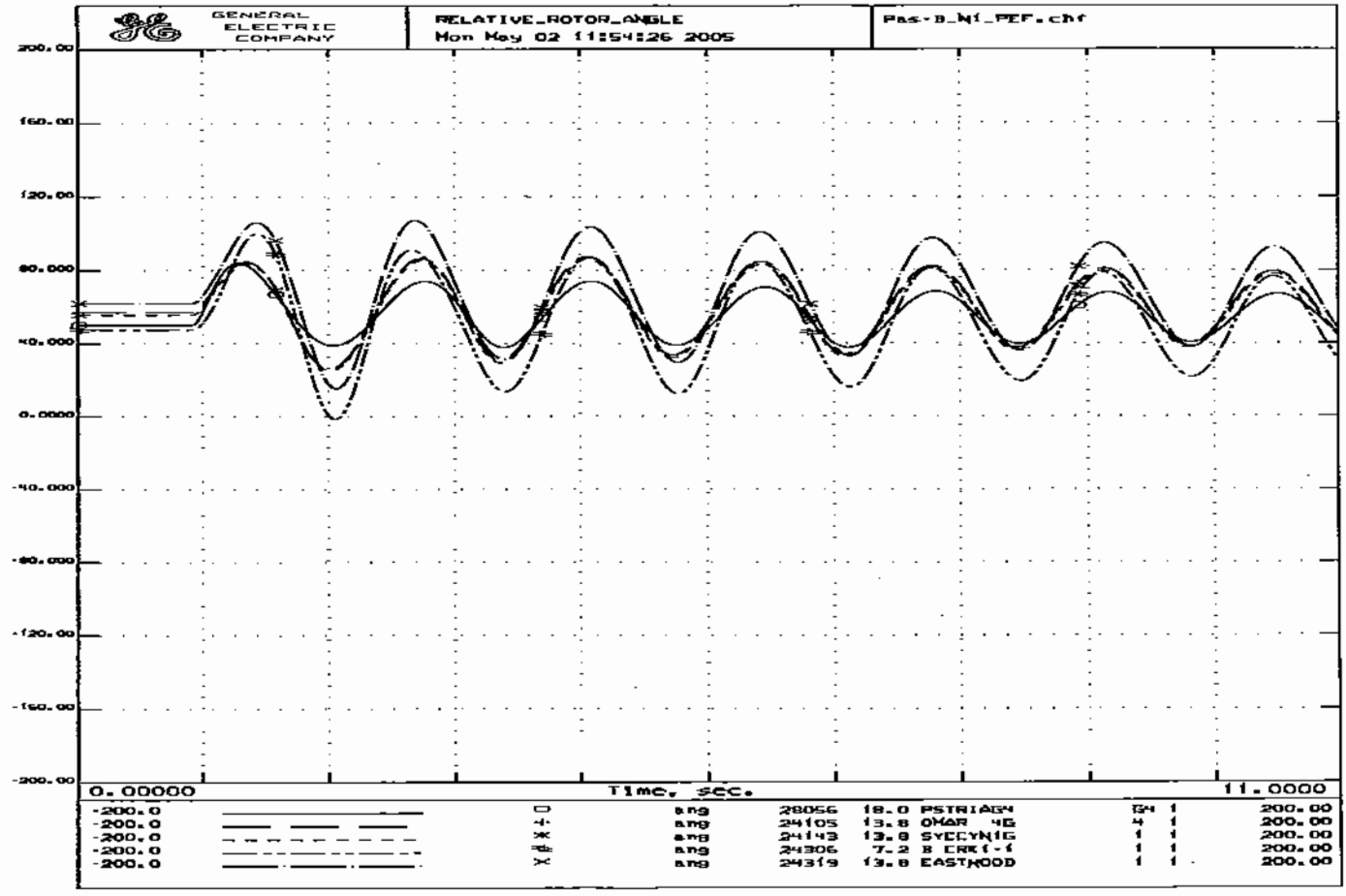
GENERAL ELECTRIC COMPANY
RELATIVE_ROTOR_ANGLE
Mon May 02 11:54:26 2005
Pas-B_W1_PEF.chf
200.00
160.00
120.00
80.000
40.000
0.0000
-40.000
-80.000
-120.00
-160.00
-200.00
0.00000
Time, sec.
11.0000
-200.0 ang 28056 18.0 PSTRIAGN G4 1 200.00
-200.0 ang 24105 13.8 OMAR 4G 4 1 200.00
-200.0 ang 24143 13.8 SYECYNIG 1 1 200.00
-200.0 ang 24306 7.2 B ERK1-1 1 1 200.00
-200.0 ang 24319 13.8 EASTWOOD 1 1 200.00

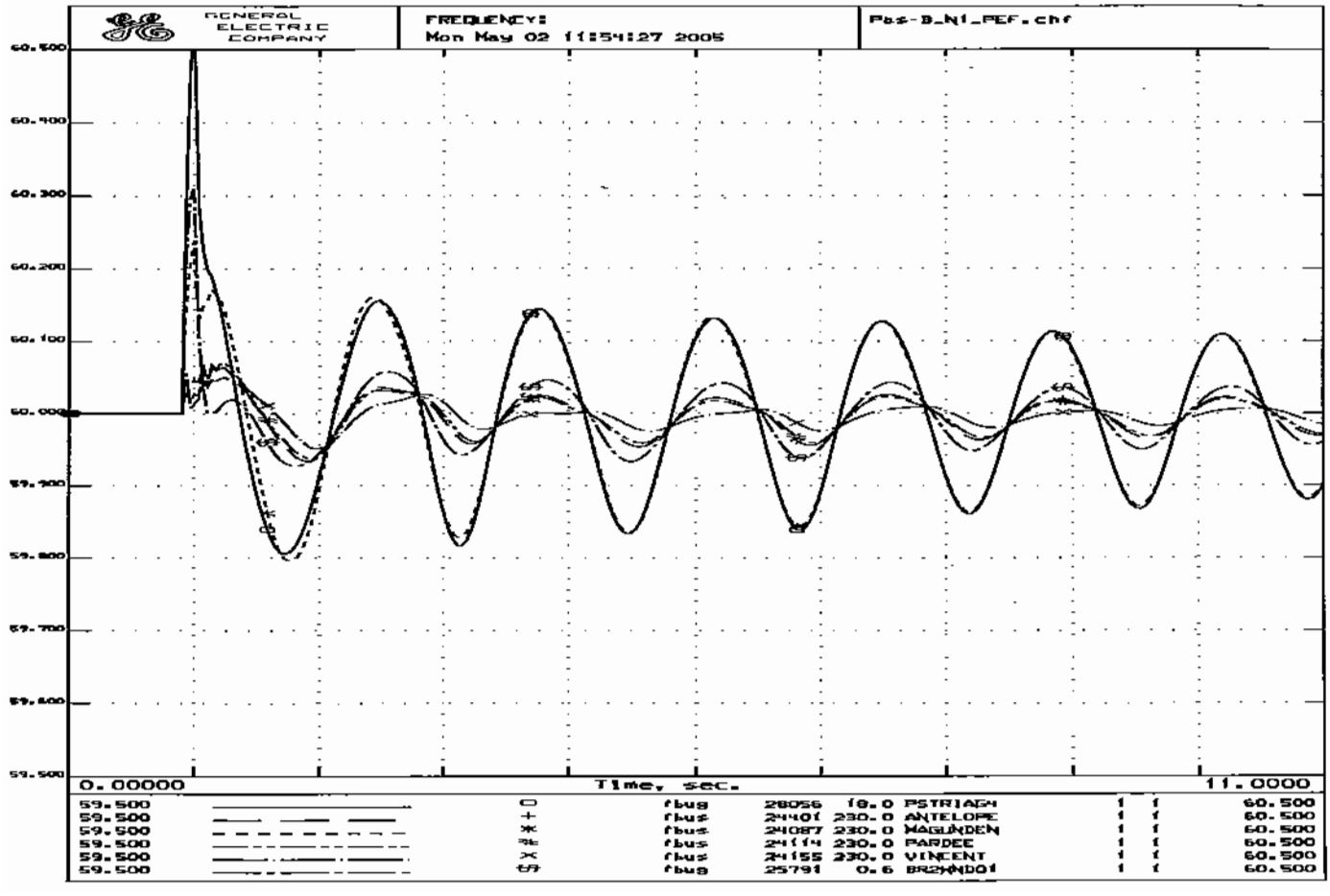
GENERAL ELECTRIC COMPANY
FREQUENCY:
Mon May 02 11:54:27 2005
Pas-D_N1_PEF.chf
60.500
60.400
60.300
60.200
60.100
60.000
59.900
59.800
59.700
59.600
59.500
0.00000
Time, sec.
11.0000
59.500 □ fbus 28056 18.0 PSTRIAG4 1 1 60.500
59.500 + fbus 24401 230.0 ANTELOPE 1 1 60.500
59.500 * fbus 24087 230.0 WAGUNDEN 1 1 60.500
59.500 fbus 24114 230.0 PARDEE 1 1 60.500
59.500 × fbus 24155 230.0 VINCENT 1 1 60.500
59.500 fbus 25791 0.6 BRANNDO1 1 1 60.500

```
PostPEF_High_SOM.sav
PostPEF.dyd
TITLE
Calpine Pastoria Add Stability Study: Loss of One 230-KV Line
6-CYCLE 3-Phase Fault at Pastoria 230kV Bus
N-1 OUTAGE: Magunden-Pastoria No.3 230kV Line
SYSTEM STABILITY CASE - Pas-Ma_N1_PostPEF.swt
PostPEF_High_SOM.sav + PostPEF.dyd + Pas-Ma_N1_PostPEF.swt
RUN 10.0
CC
CC   ***CALPINE PASTORIA ADD DYNAMIC STABILITY ASSESSMENT***
CC   APPLY A 3-PHASE FAULT ON THE PASTORIA 230-KV BUS
FB   0.0 "PASTORIA" 230
CC
CC   CLEAR FAULT IN 6 CYCLES
CFB  6.0 "PASTORIA" 230
CC
CC   REMOVE MAGUNDEN-ANTELOPE NO.3 230-KV LINE
DL   6.0 "MAGUNDEN" 230. "PASTORIA" 230. "3 "
```

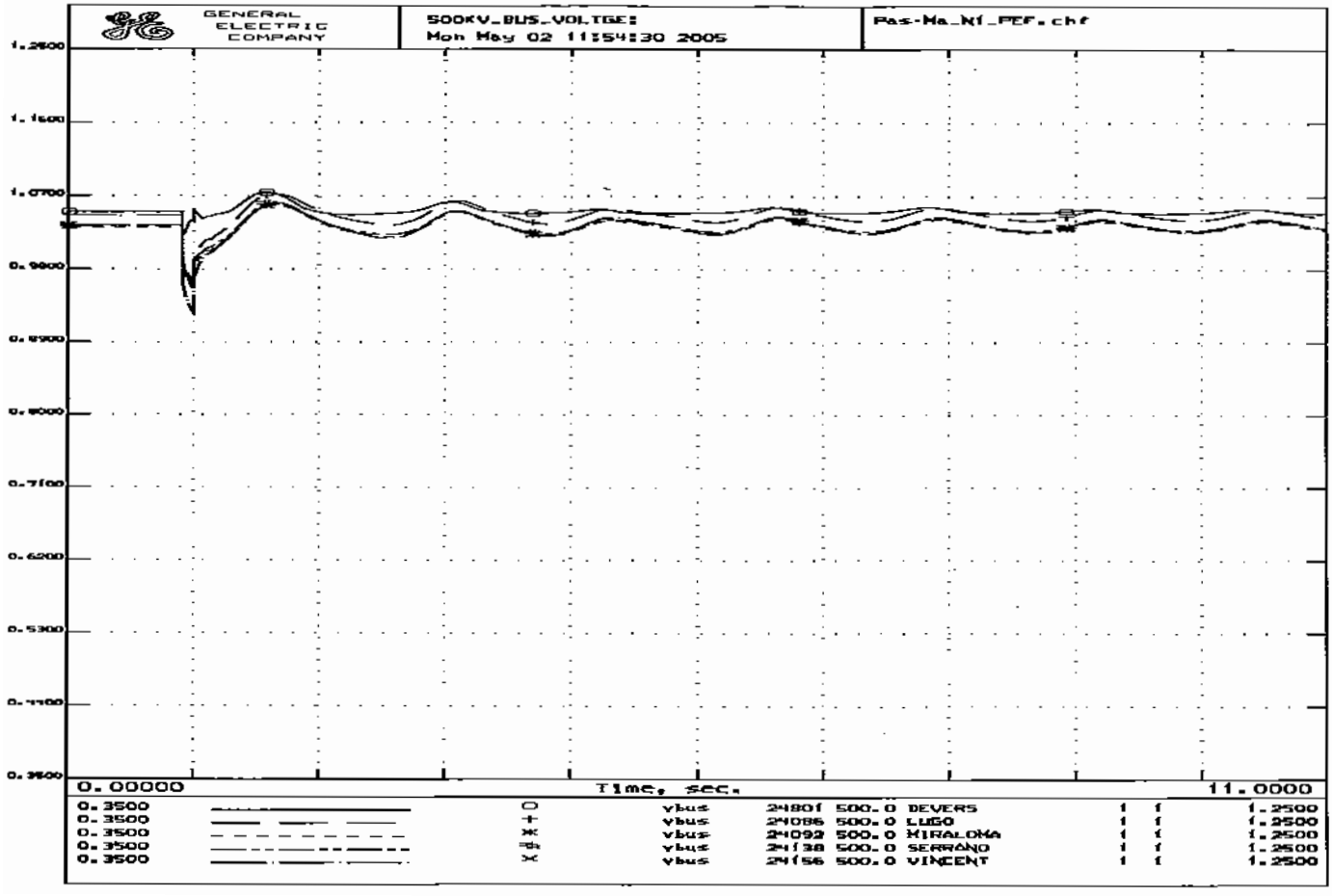
GENERAL ELECTRIC COMPANY
500KV_BUS_VOLTGE:
Mon May 02 11:54:30 2005
Pas-Ma_Ni_PEF.chf
1.2500
1.1500
1.0500
0.9500
0.8500
0.7500
0.6500
0.5500
0.4500
0.3500
0.00000
Time, sec.
11.0000
0.3500 ○ vbus 24801 500.0 DEVERS 1 1 1.2500
0.3500 + vbus 24086 500.0 LUGO 1 1 1.2500
0.3500 * vbus 24092 500.0 MIRALOMA 1 1 1.2500
0.3500 vbus 24138 500.0 SERRANO 1 1 1.2500
0.3500 × vbus 24156 500.0 VINCENT 1 1 1.2500

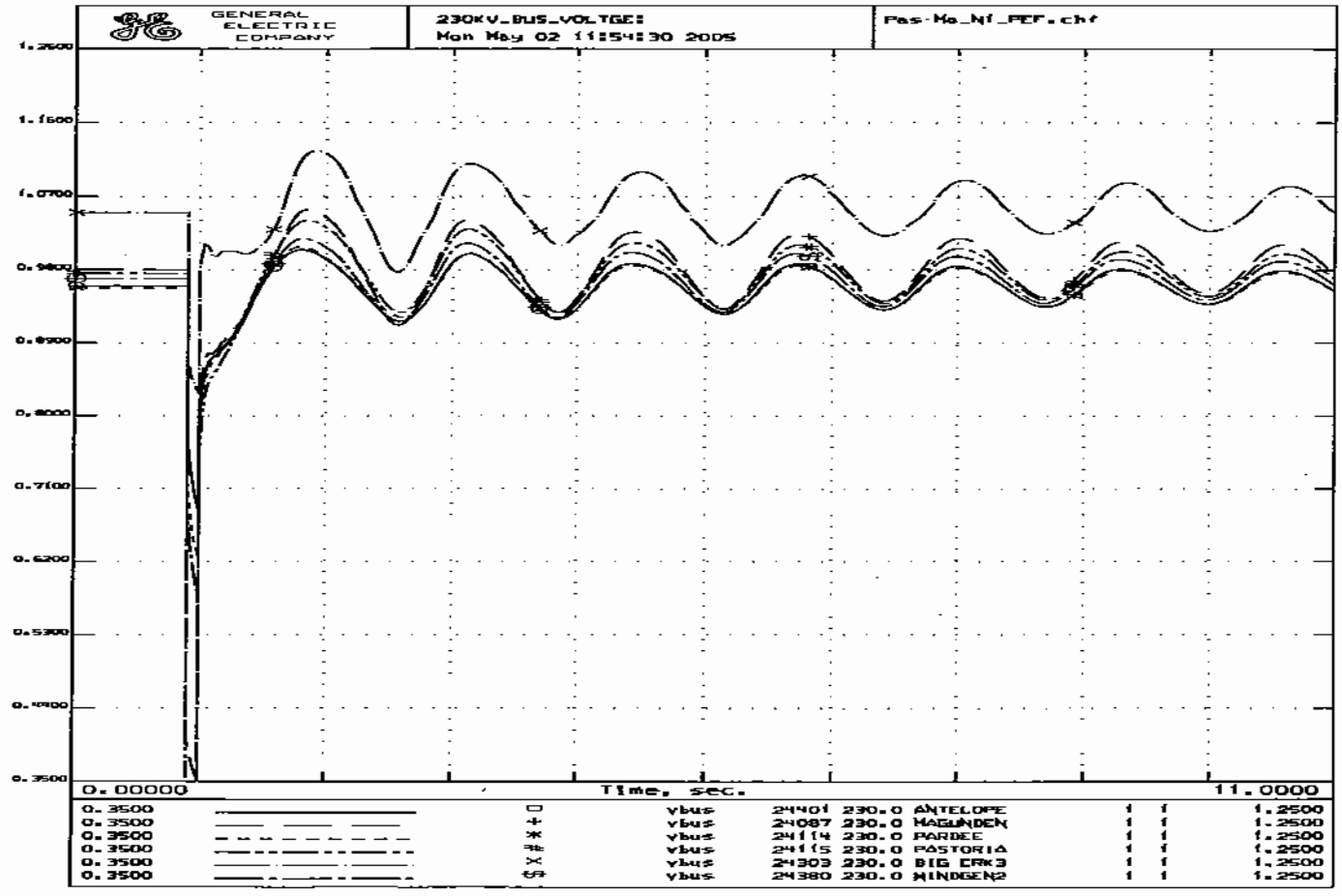
GENERAL ELECTRIC COMPANY
230KV_BUS_VOLTGE:
Mon May 02 11:54:30 2005
Pas-Ma_Nf_PEF.chf
1.2500
1.1500
1.0700
0.9800
0.8900
0.8000
0.7100
0.6200
0.5300
0.4400
0.3500
0.00000
Time, sec.
11.0000
0.3500 vbus 24401 230.0 ANTELOPE 1 1 1.2500
0.3500 vbus 24087 230.0 MAGUNDEN 1 1 1.2500
0.3500 vbus 24114 230.0 PARDEE 1 1 1.2500
0.3500 vbus 24115 230.0 PASTORIA 1 1 1.2500
0.3500 vbus 24303 230.0 BIG CRK3 1 1 1.2500
0.3500 vbus 24380 230.0 WINDGEN2 1 1 1.2500

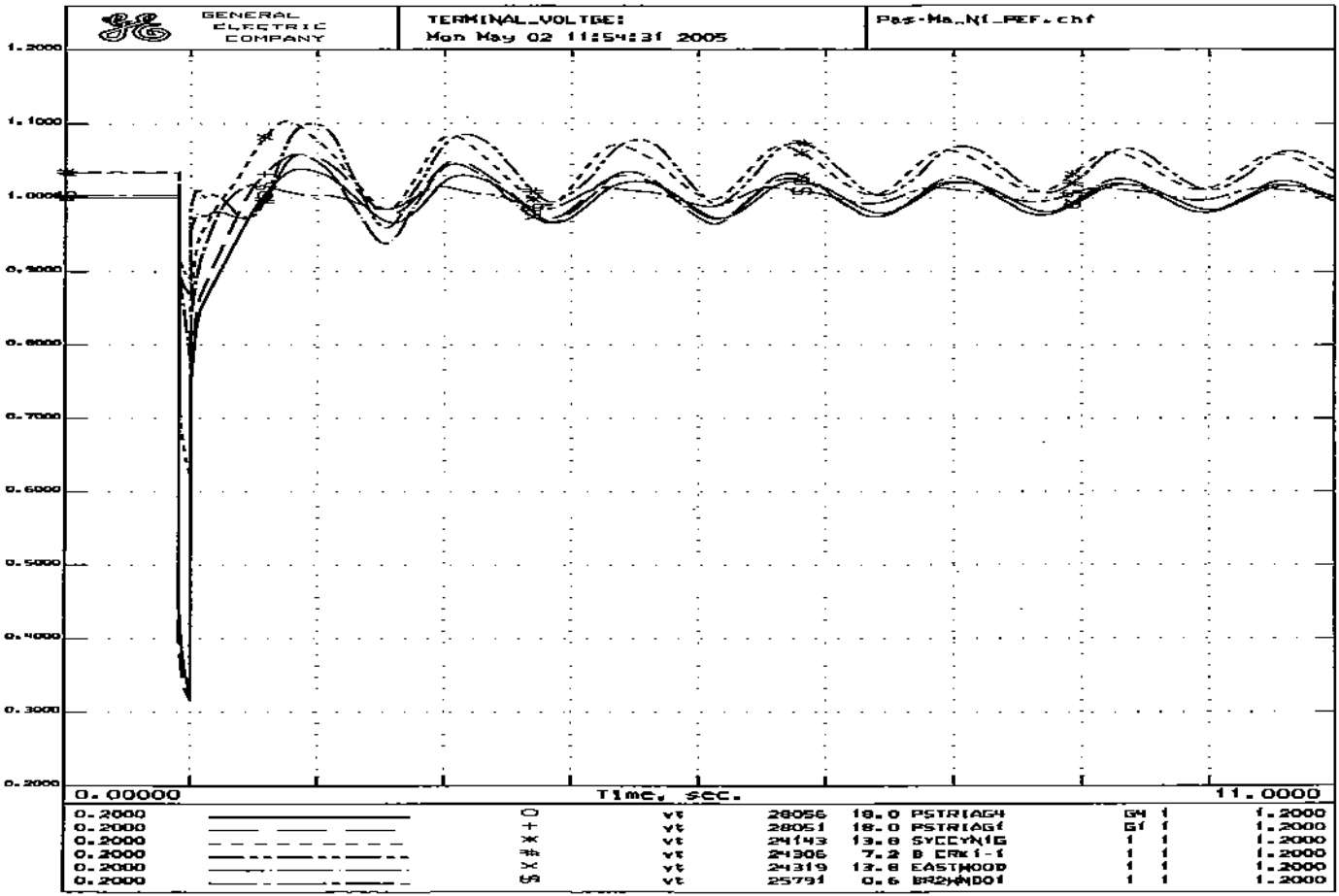
GENERAL ELECTRIC COMPANY
TERMINAL_VOLTGE:
Mon May 02 11:54:31 2005
Pa2-Ma_N1_REF.chf
1.2000
1.1000
1.0000
0.9000
0.8000
0.7000
0.6000
0.5000
0.4000
0.3000
0.2000
0.00000
Time, sec.
11.0000
0.2000 ○ vt 28056 18.0 PSTRIAG4 G4 1 1.2000
0.2000 + vt 28051 18.0 PSTRIAG1 G1 1 1.2000
0.2000 ✳ vt 24143 13.8 SYCCYN1G 1 1 1.2000
0.2000 # vt 24306 7.2 B CRK1-1 1 1 1.2000
0.2000 ✳ vt 24319 13.8 EASTWOOD 1 1 1.2000
0.2000 vt 25791 0.6 BR2WNDO1 1 1 1.2000

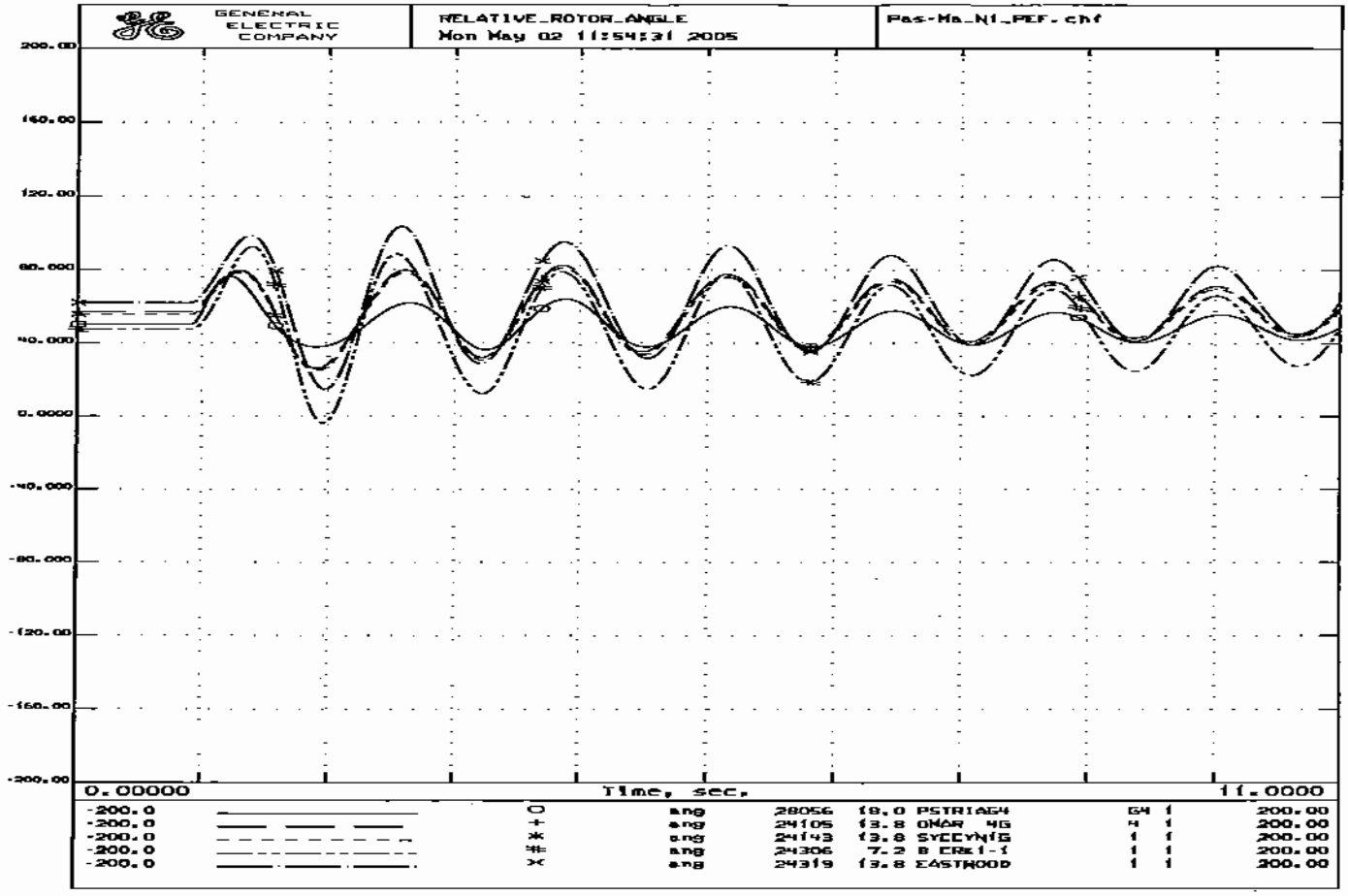
GENERAL ELECTRIC COMPANY
RELATIVE_ROTOR_ANGLE
Mon May 02 11:54:31 2005
Pas-Ma_N1_PEF.chf
200.00
160.00
120.00
80.000
40.000
0.0000
-40.000
-80.000
-120.00
-160.00
-200.00
0.00000
Time, sec.
11.0000
-200.0 ang 28056 19.0 PSTRIAGH G4 1 200.00
-200.0 ang 24105 13.8 ONAR 4G 4 1 200.00
-200.0 ang 24143 13.8 SYCCYNIG 1 1 200.00
-200.0 ang 24306 7.2 B CR&1-1 1 1 200.00
-200.0 ang 24319 13.8 EASTWOOD 1 1 200.00

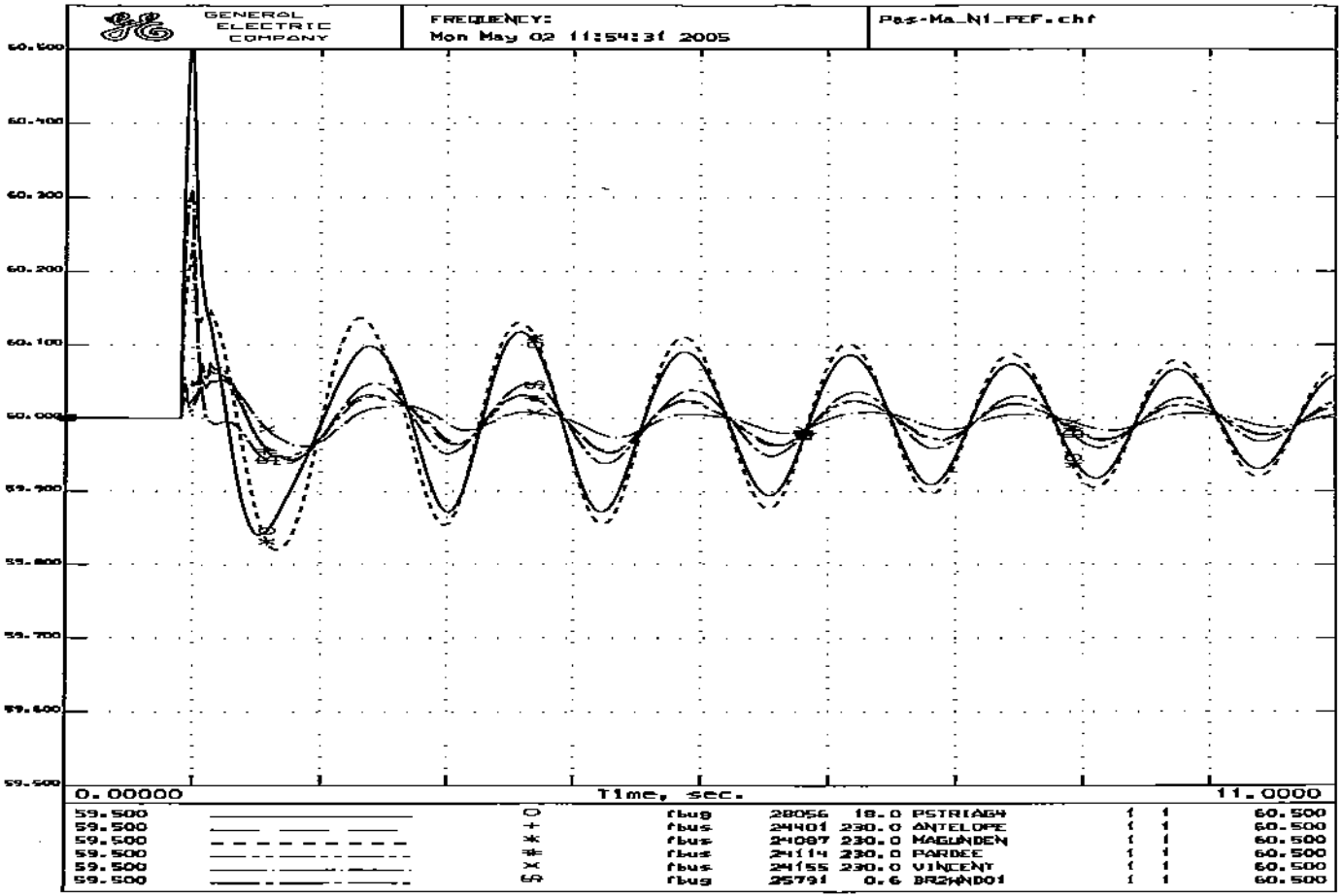
GENERAL ELECTRIC COMPANY
FREQUENCY:
Mon May 02 11:54:31 2005
Pas-Ma_N1_PEF.chf
60.500
60.400
60.300
60.200
60.100
60.000
59.900
59.800
59.700
59.600
59.500
0.00000
Time, sec.
11.0000
59.500 O fbus 28056 18.0 PSTRIAG4 1 1 60.500
59.500 + fbus 24401 230.0 ANTELOPE 1 1 60.500
59.500 * fbus 24087 230.0 MAGUNDEN 1 1 60.500
59.500 # fbus 24114 230.0 PARDEE 1 1 60.500
59.500 X fbus 24155 230.0 VINCENT 1 1 60.500
59.500 fbus 25791 0.6 BR2WNDO1 1 1 60.500

```
PostPEF_High_SOM.sav
PostPEF.dyd
TITLE
Calpine Pastoria Add Stability Study: Loss of One 230-KV Line
6-CYCLE 3-Phase Fault at Pastoria 230kV Bus
N-1 OUTAGE: Pardee-Pastoria 230kV Line
SYSTEM STABILITY CASE - Pas-P_N1_PostPEF.swt
PostPEF_High_SOM.sav + PostPEF.dyd + Pas-P_N1_PostPEF.swt
RUN 10.0
CC
CC   ***CALPINE PASTORIA ADD DYNAMIC STABILITY ASSESSMENT***
CC   APPLY A 3-PHASE FAULT ON THE PASTORIA 230-KV BUS
FB   0.0 "PASTORIA" 230
CC
CC   CLEAR FAULT IN 6 CYCLES
CFB  6.0 "PASTORIA" 230
CC
CC   REMOVE PARDEE-PASTORIA 230-KV LINE
DL   6.0 "PARDEE   " 230. "PASTORIA" 230. "1 "
```

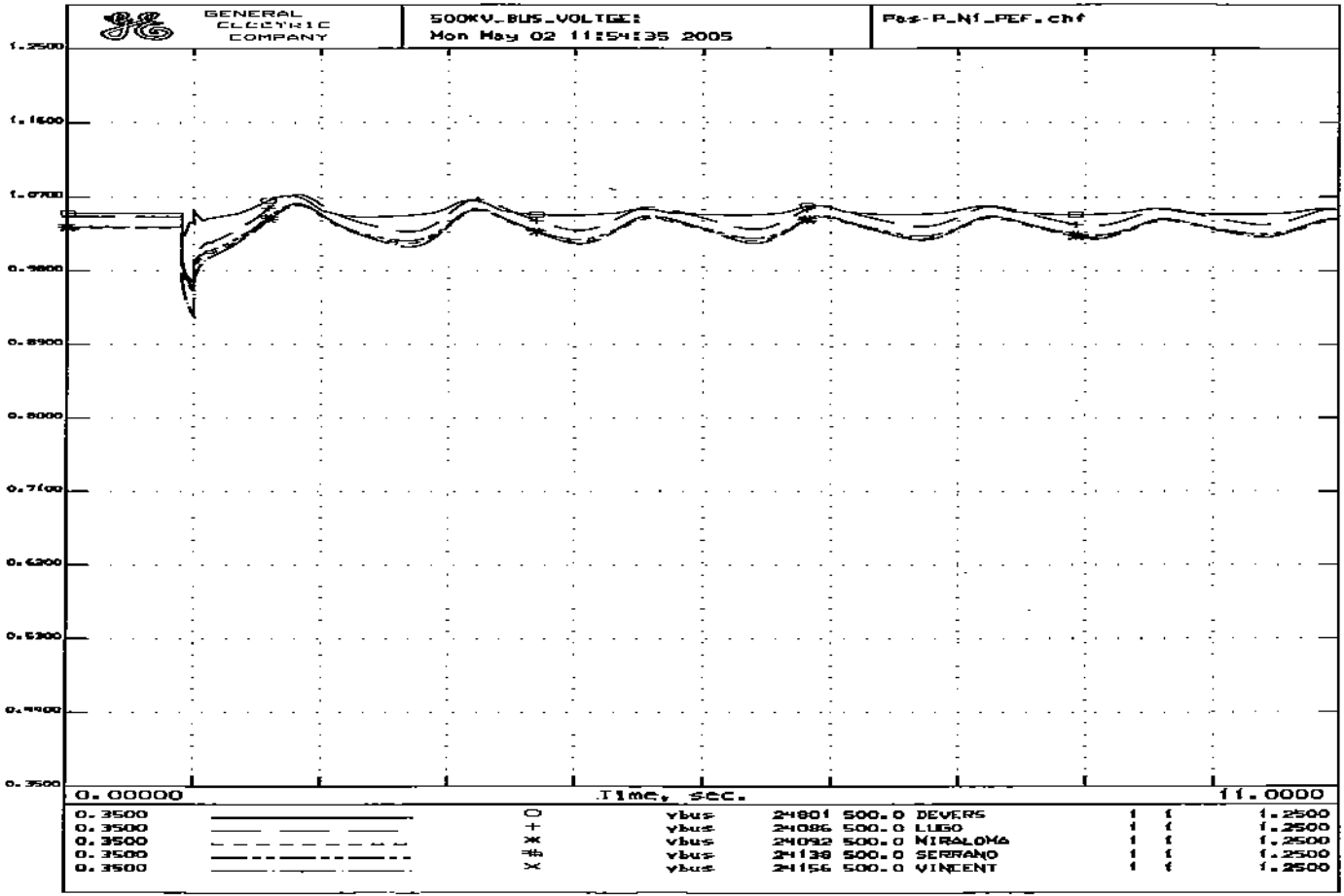
GENERAL ELECTRIC COMPANY
500KV_BUS_VOLTGE:
Mon May 02 11:54:35 2005
Fas-P_Nf_PEF.chf
1.2500
1.1600
1.0700
0.9800
0.8900
0.8000
0.7100
0.6200
0.5300
0.4400
0.3500
0.00000
Time, sec.
11.0000
0.3500 ○ vbus 24801 500.0 DEVERS 1 1 1.2500
0.3500 + vbus 24086 500.0 LUGO 1 1 1.2500
0.3500 * vbus 24092 500.0 MIRALOMA 1 1 1.2500
0.3500 # vbus 24138 500.0 SERRANO 1 1 1.2500
0.3500 × vbus 24156 500.0 VINCENT 1 1 1.2500

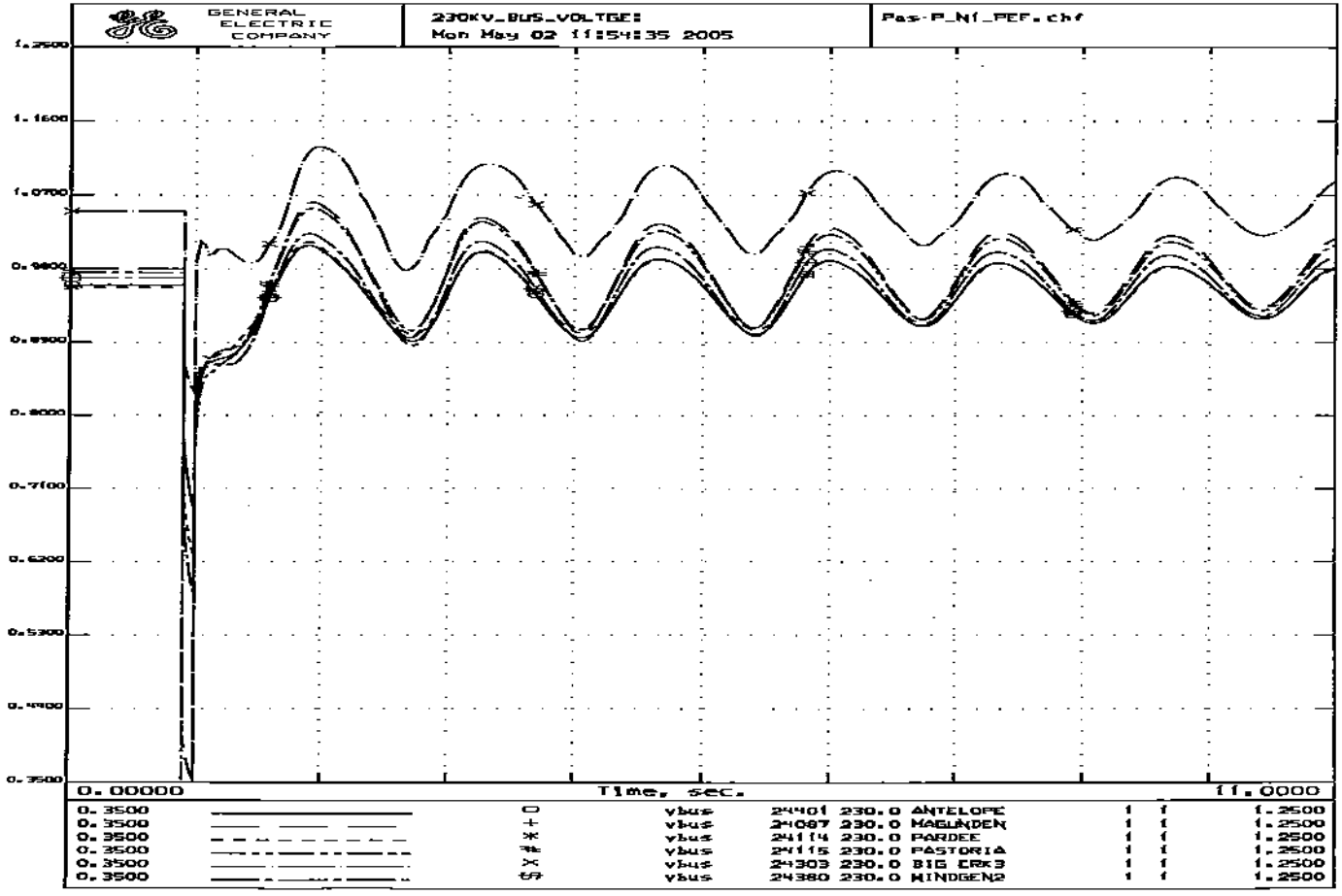
GENERAL ELECTRIC COMPANY
230KV_BUS_VOLTGE:
Mon May 02 11:54:35 2005
Pas-P_N1_PEF.chf
1.2500
1.1600
1.0700
0.9800
0.8900
0.8000
0.7100
0.6200
0.5300
0.4400
0.3500
0.00000
Time, sec.
11.0000
0.3500 ○ vbus 24401 230.0 ANTELOPE 1 1 1.2500
0.3500 + vbus 24087 230.0 MAGUNDEN 1 1 1.2500
0.3500 * vbus 24114 230.0 PARDEE 1 1 1.2500
0.3500 vbus 24115 230.0 PASTORIA 1 1 1.2500
0.3500 × vbus 24303 230.0 BIG CRK3 1 1 1.2500
0.3500 vbus 24380 230.0 WINDGEN2 1 1 1.2500

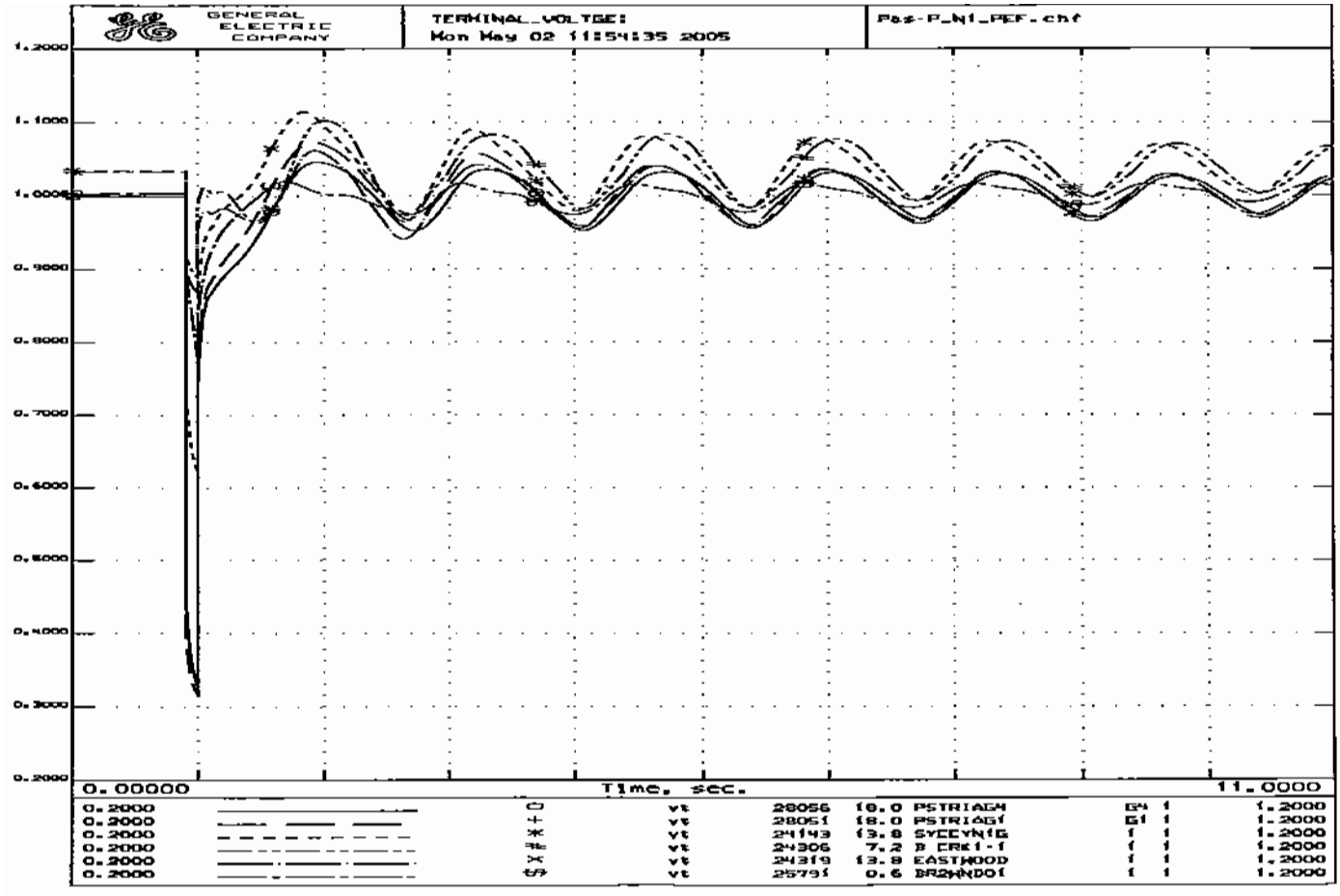
GENERAL ELECTRIC COMPANY
TERMINAL_VOLTGE:
Mon May 02 11:54:35 2005
Pas-P_N1_PEF.chf
1.2000
1.1000
1.0000
0.9000
0.8000
0.7000
0.6000
0.5000
0.4000
0.3000
0.2000
0.00000
Time, sec.
11.0000
0.2000 ○ vt 28056 18.0 PSTRIAGM G4 1 1.2000
0.2000 + vt 28051 18.0 PSTRIAG1 G1 1 1.2000
0.2000 ✳ vt 24143 13.8 SYCCYN1G 1 1 1.2000
0.2000 ✱ vt 24306 7.2 B CRK1-1 1 1 1.2000
0.2000 ✕ vt 24319 13.8 EASTWOOD 1 1 1.2000
0.2000 vt 25791 0.6 BRZWNDO1 1 1 1.2000

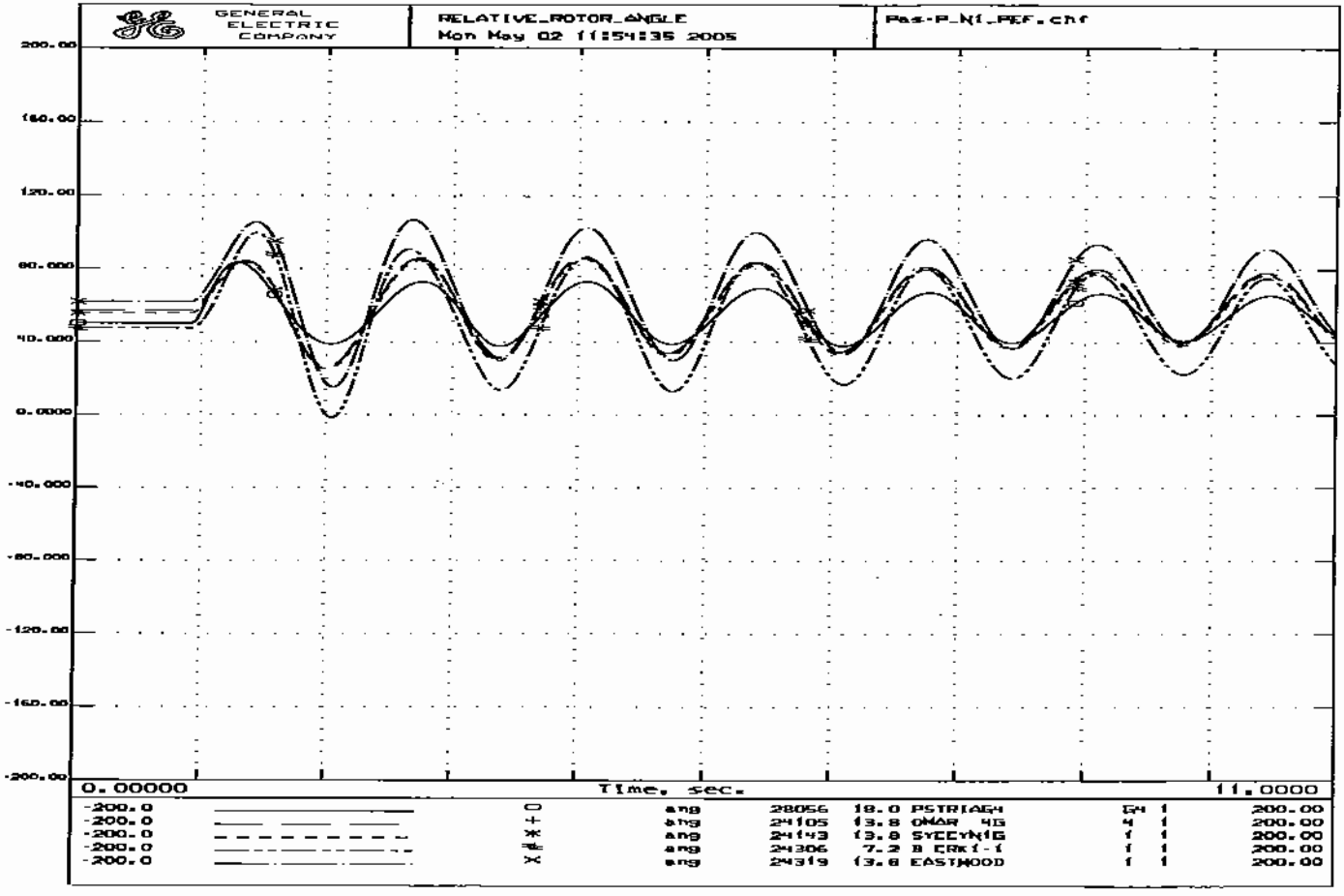
GENERAL ELECTRIC COMPANY
RELATIVE_ROTOR_ANGLE
Mon May 02 11:54:35 2005
Pas-P_N1_PEF.chf
200.00
160.00
120.00
80.000
40.000
0.0000
-40.000
-80.000
-120.00
-160.00
-200.00
0.00000
Time, sec.
11.0000
-200.0 ang 28056 18.0 PSTRIAGH GH 1 200.00
-200.0 ang 24105 13.8 OMAR 4G 4 1 200.00
-200.0 ang 24143 13.8 SYCCYN1G 1 1 200.00
-200.0 ang 24306 7.2 B CRK1-1 1 1 200.00
-200.0 ang 24319 13.8 EASTWOOD 1 1 200.00

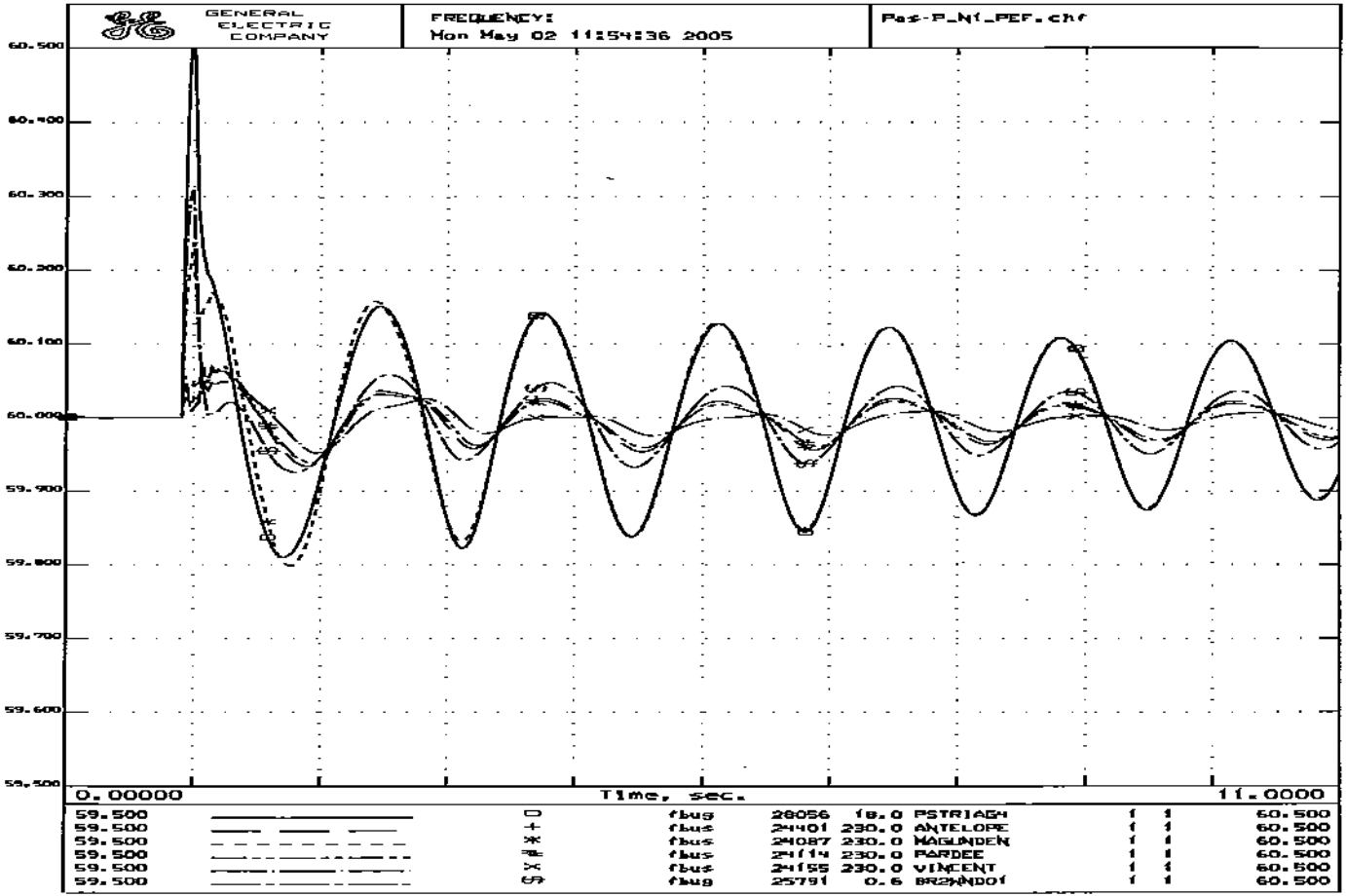
GENERAL ELECTRIC COMPANY
FREQUENCY:
Mon May 02 11:54:36 2005
Pa±-P_N1_PEF.chf
60.500
60.400
60.300
60.200
60.100
60.000
59.900
59.800
59.700
59.600
59.500
0.00000
Time, sec.
11.0000
59.500 fbus 28056 18.0 PSTRIAGH 1 1 60.500
59.500 fbus 24401 230.0 ANTELOPE 1 1 60.500
59.500 fbus 24087 230.0 WASUNDEN 1 1 60.500
59.500 fbus 24114 230.0 PARDEE 1 1 60.500
59.500 fbus 24155 230.0 VINCENT 1 1 60.500
59.500 fbus 25791 0.6 BRZHNDO1 1 1 60.500

```
PostPEF_High_SOM.sav
PostPEF.dyd
TITLE
Calpine Pastoria Add Stability Study: Loss of One 230-KV Line
6-CYCLE 3-Phase Fault at Pardee 230kV Bus
N-1 OUTAGE: Pardee-Bailey 230kV Line
SYSTEM STABILITY CASE - P-B_N1_PostPEF.swt
PostPEF_High_SOM.sav + PostPEF.dyd + P-B_N1_PostPEF.swt
RUN 10.0
CC
CC   ***CALPINE PASTORIA ADD DYNAMIC STABILITY ASSESSMENT***
CC   APPLY A 3-PHASE FAULT ON THE PARDEE 230-KV BUS
FB   0.0 "PARDEE   " 230
CC
CC   CLEAR FAULT IN 6 CYCLES
CFB 6.0 "PARDEE   " 230
CC
CC   REMOVE PARDEE-BAILEY 230-KV LINE
DL   6.0 "PARDEE   " 230, "BAILEY   " 230, "1 "
```

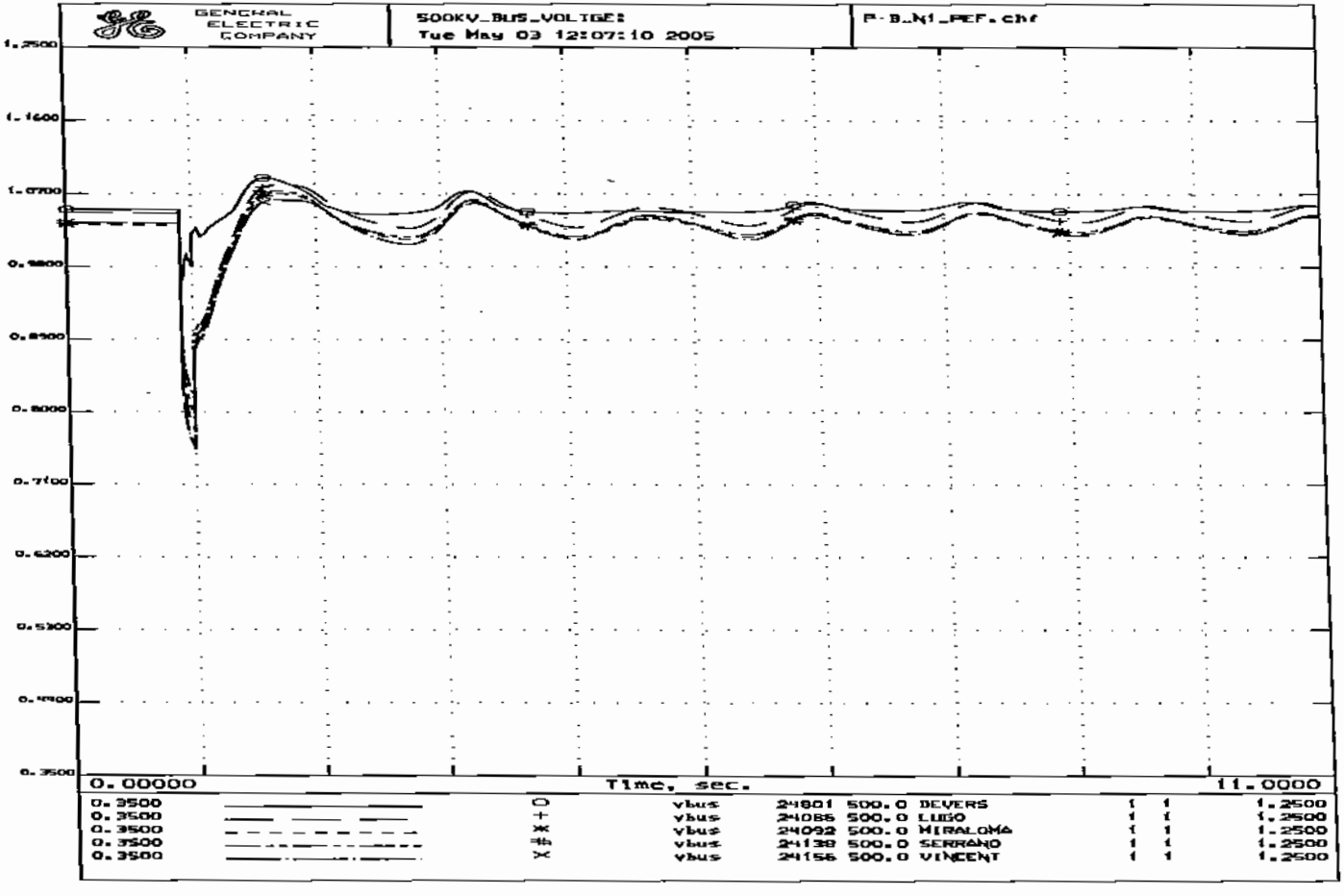
GENERAL ELECTRIC COMPANY
500KV_BUS_VOLTGE:
Tue May 03 12:07:10 2005
P-B_N1_REF.chf
1.2500
1.1600
1.0700
0.9800
0.8900
0.8000
0.7100
0.6200
0.5300
0.4400
0.3500
0.00000
Time, sec.
11.0000
0.3500 ○ vbus 24801 500.0 DEVERS 1 1 1.2500
0.3500 + vbus 24086 500.0 LUGO 1 1 1.2500
0.3500 ✱ vbus 24092 500.0 MIRALOMA 1 1 1.2500
0.3500 # vbus 24138 500.0 SERRANO 1 1 1.2500
0.3500 × vbus 24156 500.0 VINCENT 1 1 1.2500

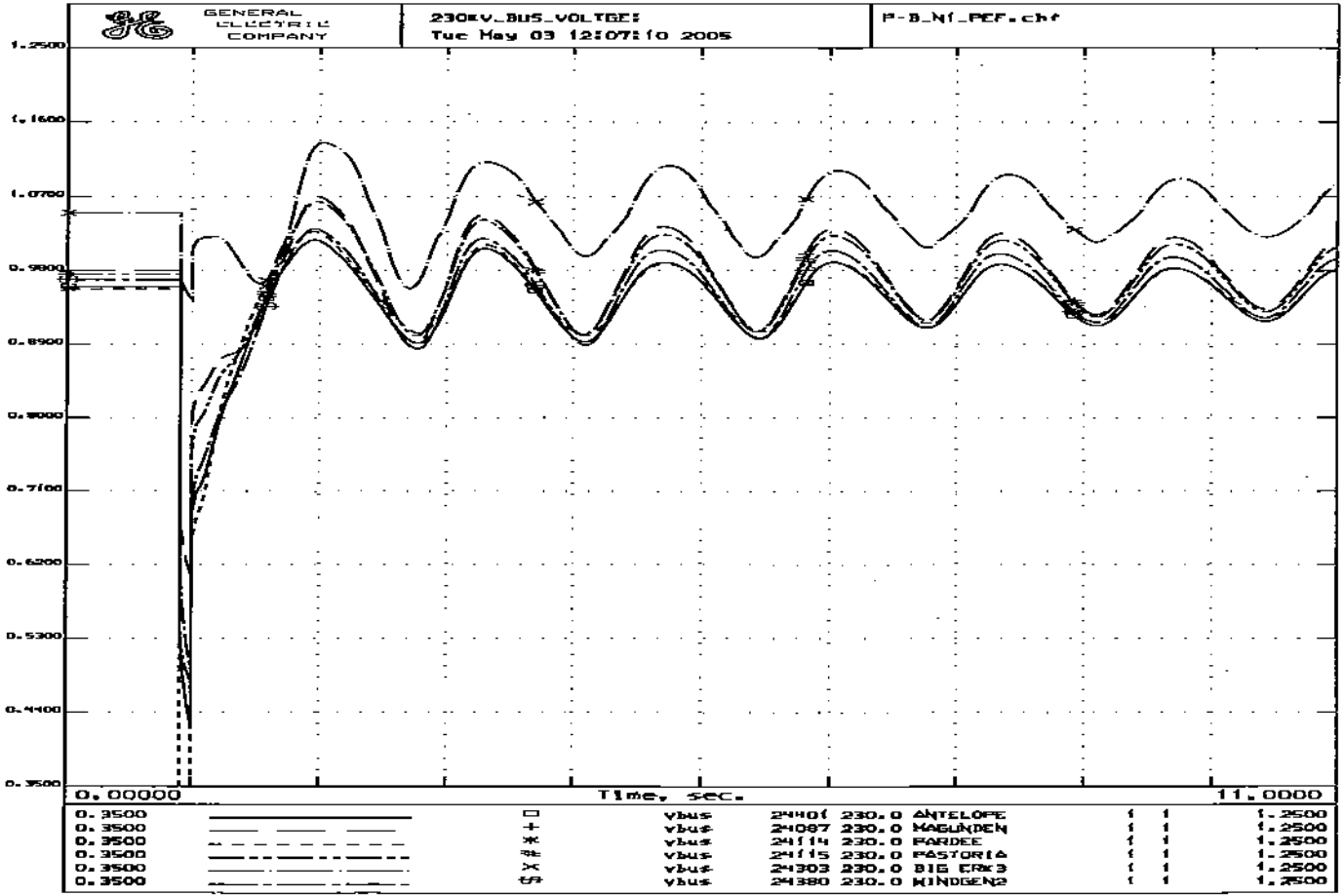
GENERAL ELECTRIC COMPANY
230KV_BUS_VOLTGE:
Tue May 03 12:07:10 2005
P-B_Nf_PEF.chf
1.2500
1.1600
1.0700
0.9800
0.8900
0.8000
0.7100
0.6200
0.5300
0.4400
0.3500
0.00000
Time, sec.
11.0000
0.3500 vbus 24401 230.0 ANTELOPE 1 1 1.2500
0.3500 vbus 24087 230.0 MAGUNDEN 1 1 1.2500
0.3500 vbus 24114 230.0 PARDEE 1 1 1.2500
0.3500 vbus 24115 230.0 PASTORIA 1 1 1.2500
0.3500 vbus 24303 230.0 BIG EAK3 1 1 1.2500
0.3500 vbus 24380 230.0 WINDGEN2 1 1 1.2500

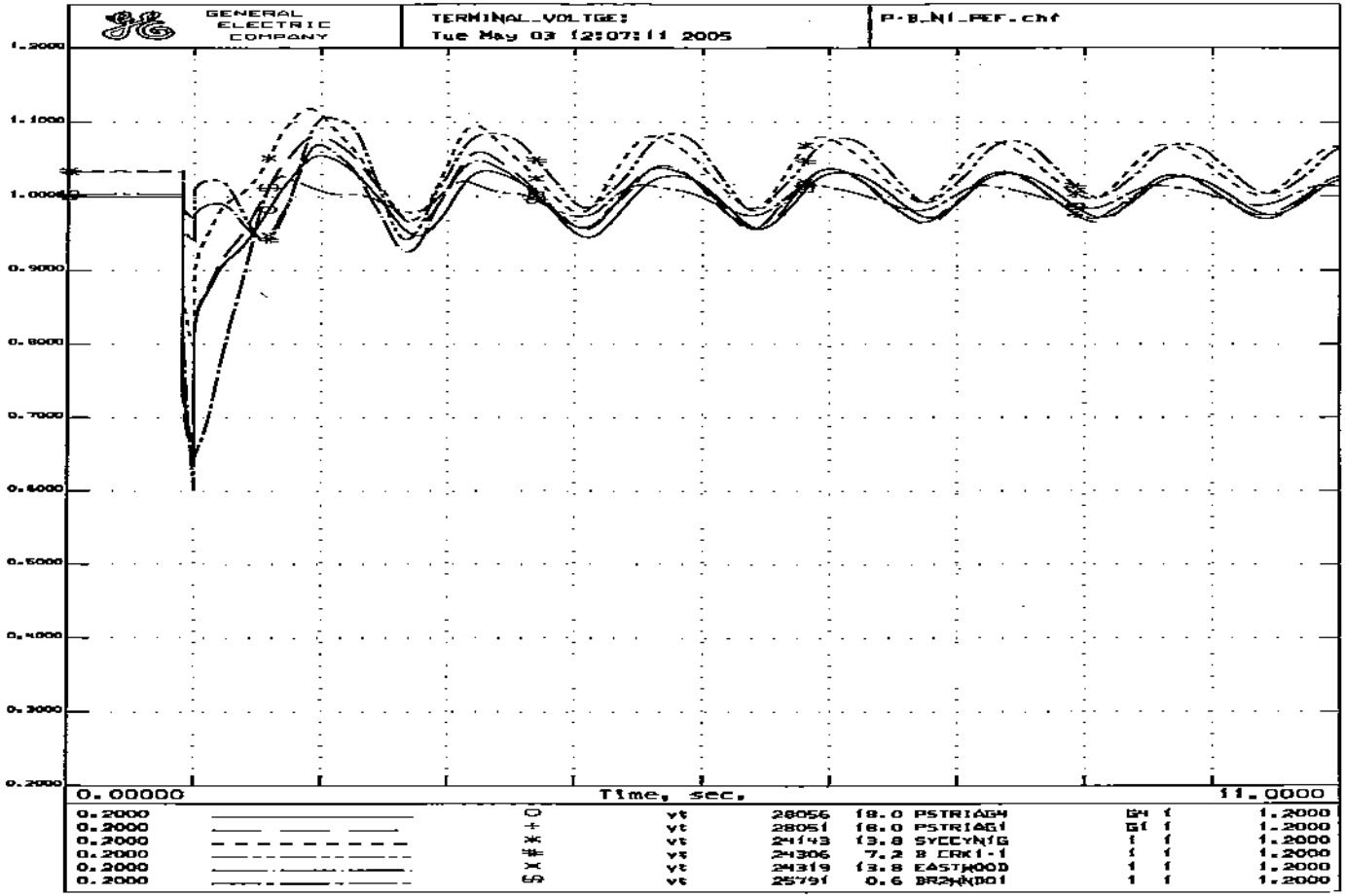
GENERAL ELECTRIC COMPANY
TERMINAL_VOLTGE:
Tue May 03 12:07:11 2005
P-B_NI_REF.chf
1.2000
1.1000
1.0000
0.9000
0.8000
0.7000
0.6000
0.5000
0.4000
0.3000
0.2000
0.00000
Time, sec.
11.0000
0.2000 ○ vt 28056 18.0 PSTRIAG4 G4 1 1.2000
0.2000 + vt 28051 18.0 PSTRIAG1 G1 1 1.2000
0.2000 * vt 24143 13.8 SYCCYNIG 1 1 1.2000
0.2000 # vt 24306 7.2 B CRK1-1 1 1 1.2000
0.2000 X vt 24319 13.8 EASTWOOD 1 1 1.2000
0.2000 vt 25791 0.6 BRANDO1 1 1 1.2000

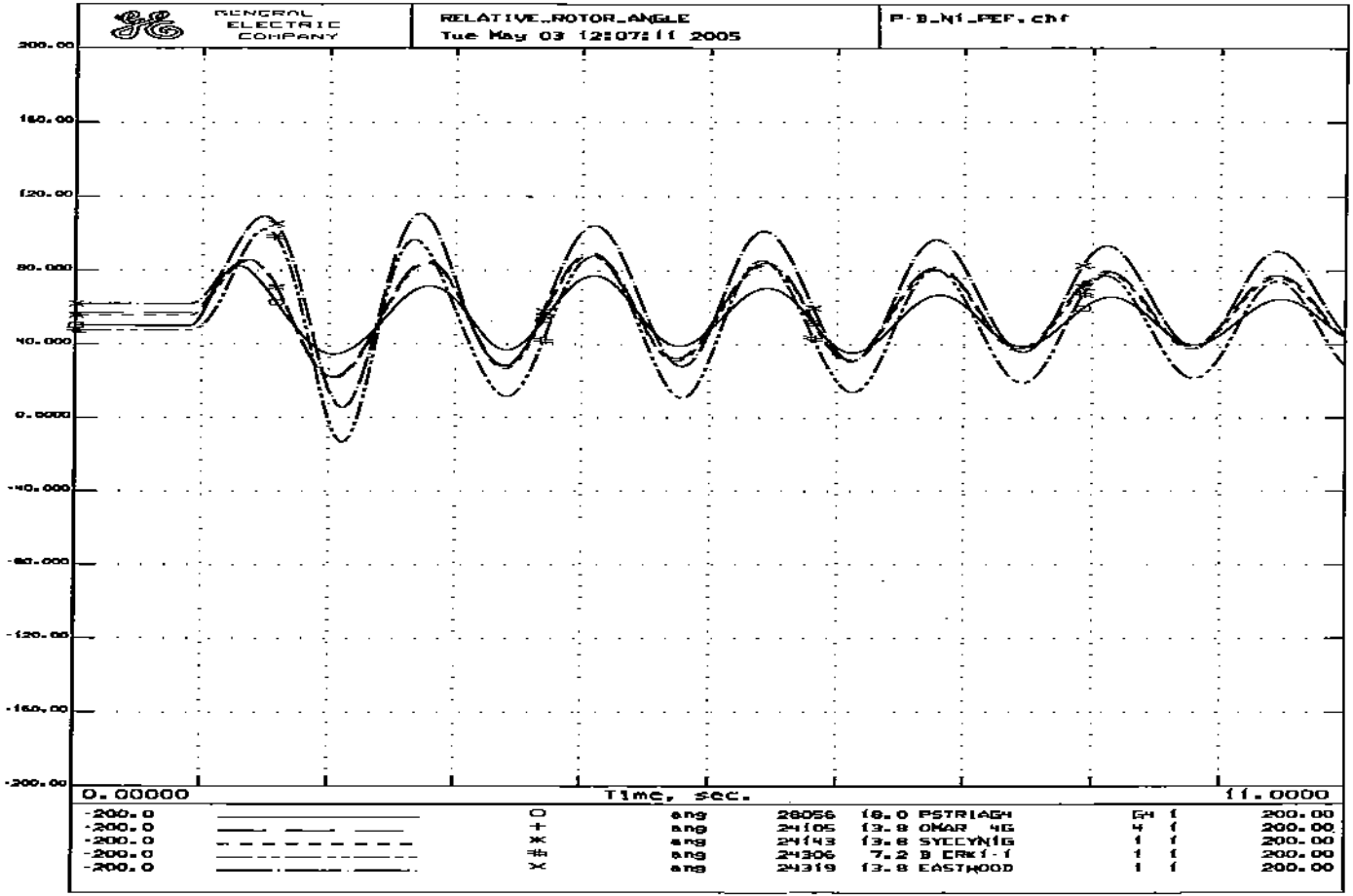
GENERAL ELECTRIC COMPANY
RELATIVE_ROTOR_ANGLE
Tue May 03 12:07:11 2005
P-B_N1_PEF.chf
200.00
160.00
120.00
80.000
40.000
0.0000
-40.000
-80.000
-120.00
-160.00
-200.00
0.00000
Time, sec.
11.0000
-200.0 ang 28056 18.0 PSTRIAGH G4 1 200.00
-200.0 + ang 24105 13.8 OMAR 4G 4 1 200.00
-200.0 * ang 24143 13.8 SYCCYN1G 1 1 200.00
-200.0 # ang 24306 7.2 B ERK1-1 1 1 200.00
-200.0 X ang 24319 13.8 EASTWOOD 1 1 200.00

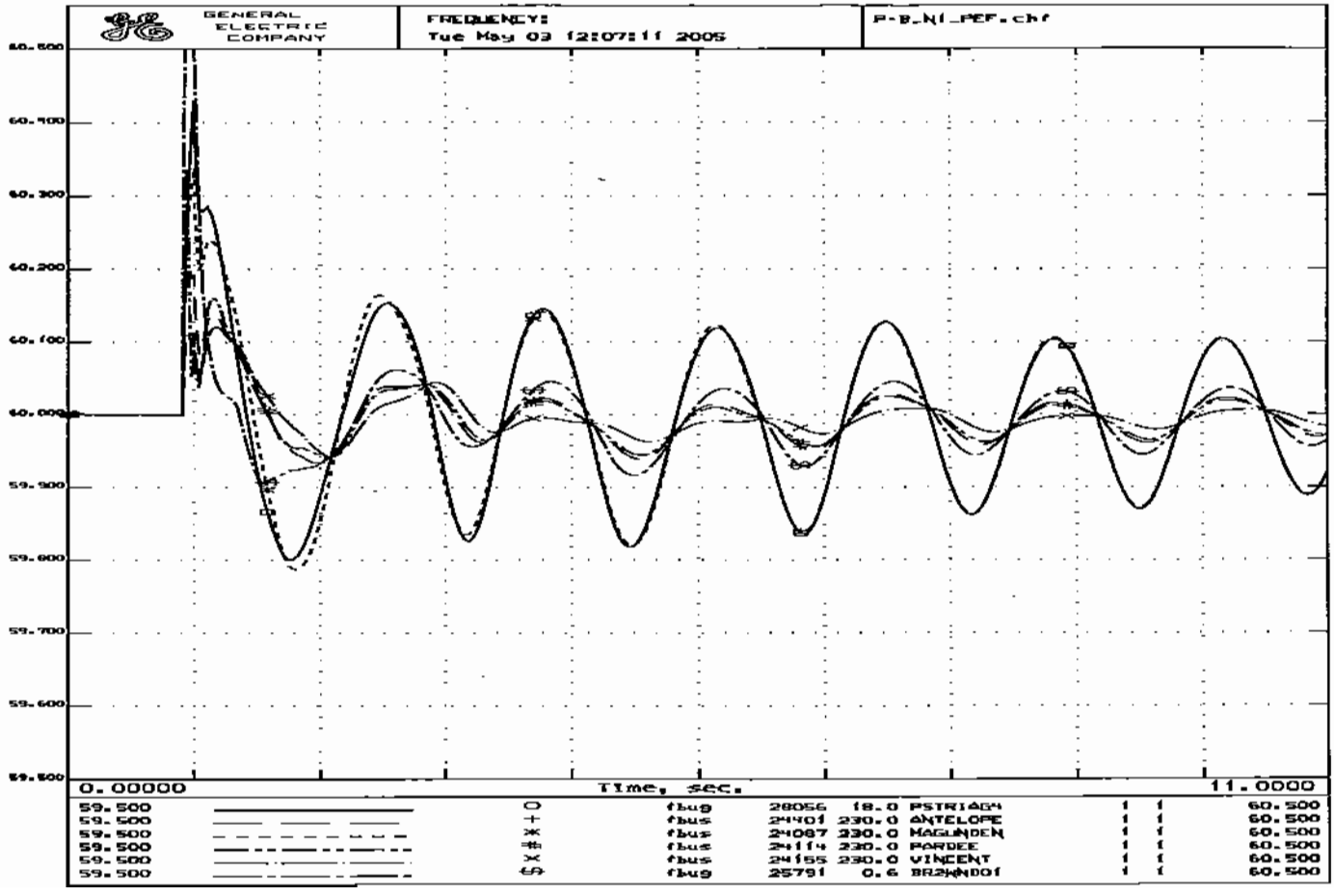
GENERAL ELECTRIC COMPANY
FREQUENCY:
Tue May 03 12:07:11 2005
P-B_NI_PEF.chf
60.500
60.400
60.300
60.200
60.100
60.000
59.900
59.800
59.700
59.600
59.500
0.00000
Time, sec.
11.0000
59.500 ○ fbus 28056 18.0 PSTRIAGM 1 1 60.500
59.500 + fbus 24401 230.0 ANTELOPE 1 1 60.500
59.500 ✳ fbus 24087 230.0 MAGUNDEN 1 1 60.500
59.500 # fbus 24114 230.0 PARDEE 1 1 60.500
59.500 × fbus 24155 230.0 VINCENT 1 1 60.500
59.500 ⊕ fbus 25791 0.6 BRAHNDOF 1 1 60.500

```
PostPEF_High_SOM.sav
PostPEF.dyd
TITLE
Calpine Pastoria Add Stability Study: Loss of One 230-KV Line
6-CYCLE 3-Phase Fault at Pardee 230kV Bus
N-1 OUTAGE: Pardee-Pastoria-Warne 230kV Line
SYSTEM STABILITY CASE - P-W-Pas_N1_PostPEF.swt
PostPEF_High_SOM.sav + PostPEF.dyd + P-W-Par_N1_PostPEF.swt
RUN 10.0
CC
CC   ***CALPINE PASTORIA ADD DYNAMIC STABILITY ASSESSMENT***
CC   APPLY A 3-PHASE FAULT ON THE PARDEE 230-KV BUS
FB   0.0 "PARDEE   " 230
CC
CC   CLEAR FAULT IN 6 CYCLES
CFB 6.0 "PARDEE   " 230
CC
CC   REMOVE PARDEE-PASTORIA-WARNE 230-KV LINE
TG   6.0 "WARNE1   " 13.80 "1 "
TG   6.0 "WARNE3   " 13.80 "1 "
DL   6.0 "PARDEE   " 230.  "WARNETAP" 230.  "1 "
DL   6.0 "WARNE    " 230.  "WARNETAP" 230.  "1 "
DL   6.0 "PASTORIA" 230.  "WARNETAP" 230.  "1 "
```

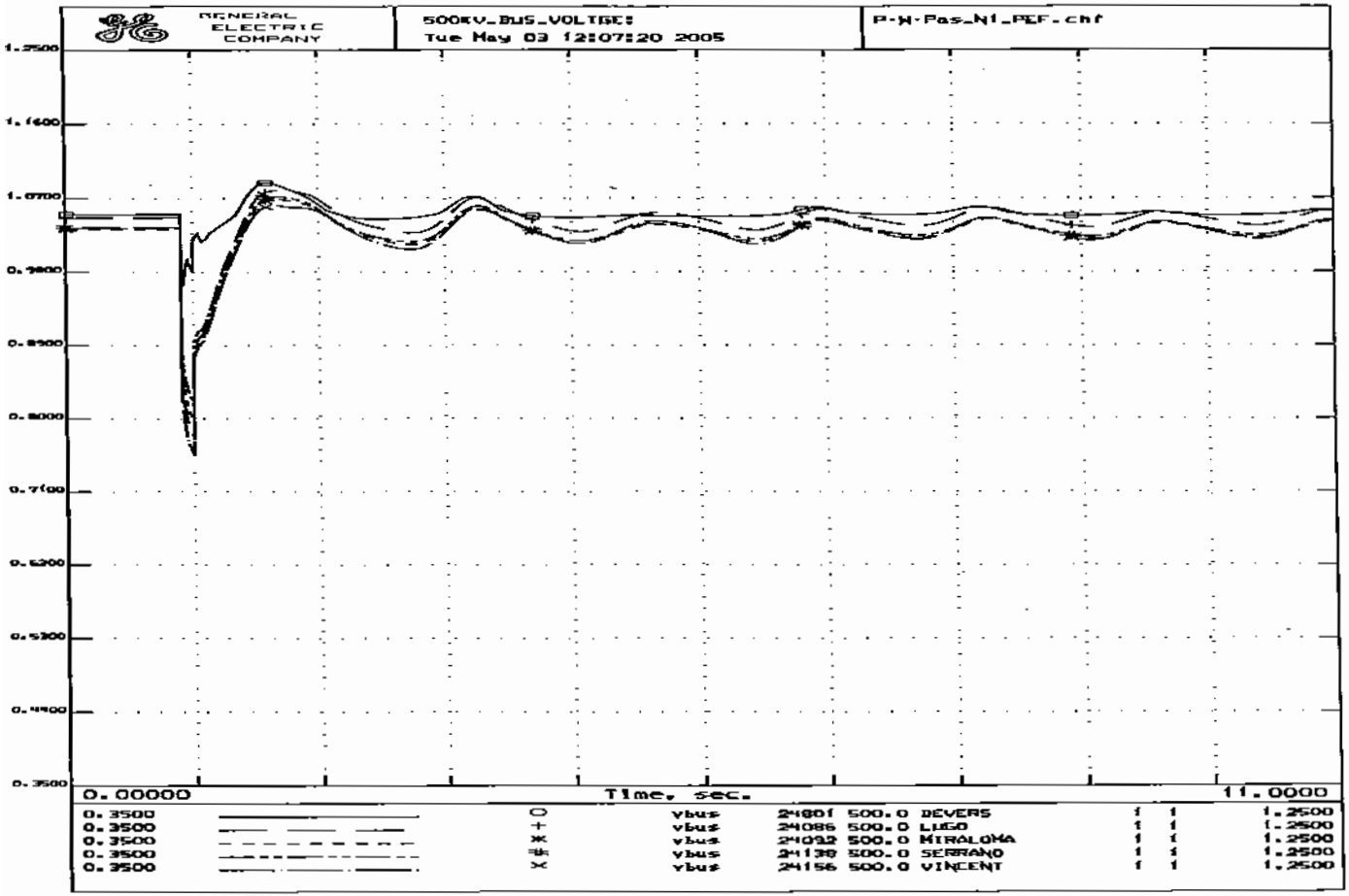
GENERAL ELECTRIC COMPANY
500KV_BUS_VOLTGE:
Tue May 03 12:07:20 2005
P-W-Pas_N1_REF.chf
1.2500
1.1600
1.0700
0.9800
0.8900
0.8000
0.7100
0.6200
0.5300
0.4400
0.3500
0.00000
Time, sec.
11.0000
0.3500 ○ vbus 24801 500.0 DEVERS 1 1 1.2500
0.3500 + vbus 24086 500.0 LUGO 1 1 1.2500
0.3500 ✱ vbus 24092 500.0 MIRALOMA 1 1 1.2500
0.3500 ✱ vbus 24138 500.0 SERRANO 1 1 1.2500
0.3500 × vbus 24156 500.0 VINCENT 1 1 1.2500

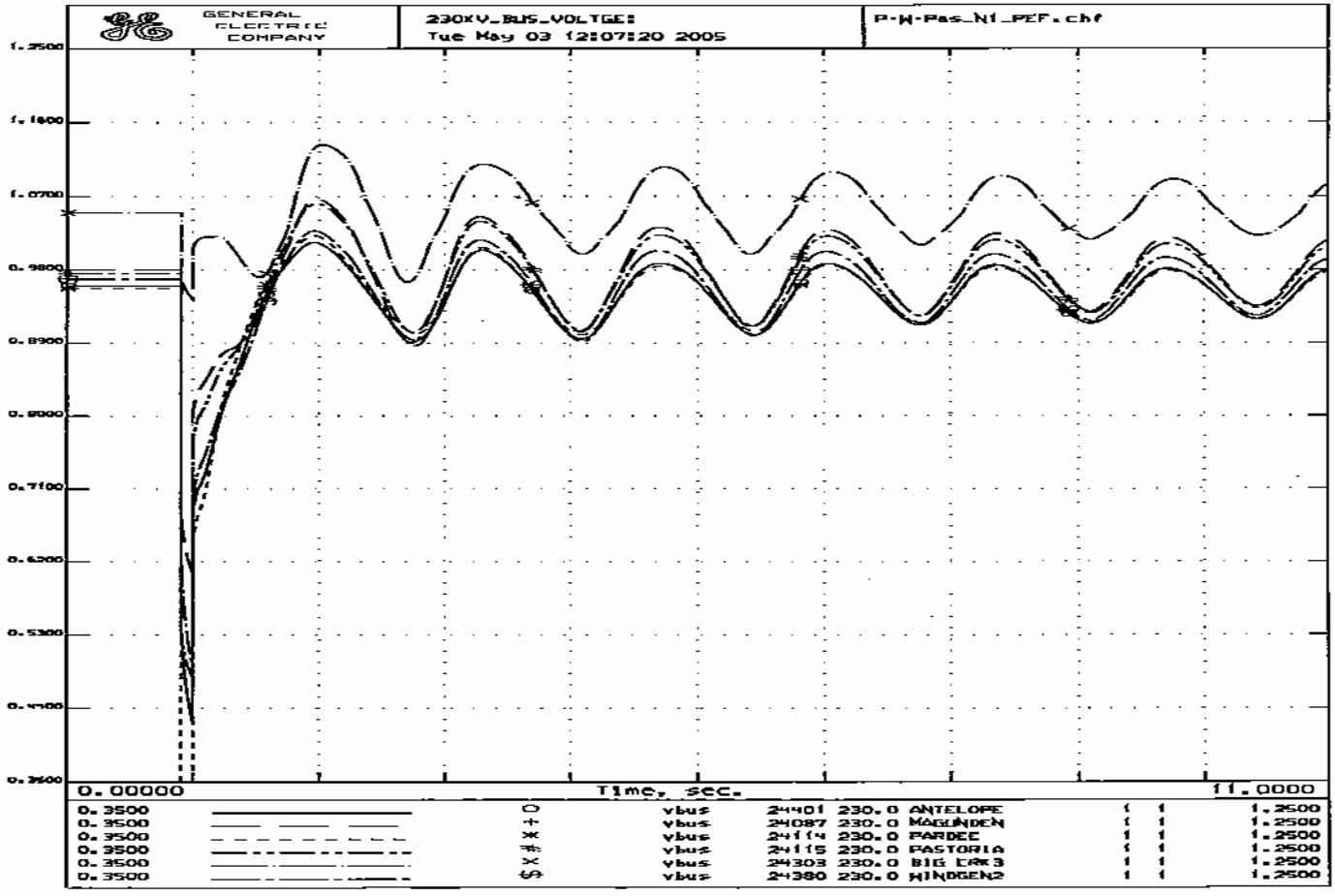
GENERAL ELECTRIC COMPANY
230KV_BUS_VOLTGE:
Tue May 03 12:07:20 2005
P-W-Pas_N1_PEF.chf
1.2500
1.1600
1.0700
0.9800
0.8900
0.8000
0.7100
0.6200
0.5300
0.4400
0.3500
0.00000
Time, sec.
11.0000
0.3500 O vbus 24401 230.0 ANTELOPE 1 1 1.2500
0.3500 + vbus 24087 230.0 MAGUNDEN 1 1 1.2500
0.3500 * vbus 24114 230.0 PARDEE 1 1 1.2500
0.3500 # vbus 24115 230.0 PASTORIA 1 1 1.2500
0.3500 X vbus 24303 230.0 BIG OAK3 1 1 1.2500
0.3500 vbus 24380 230.0 WINDGEN2 1 1 1.2500

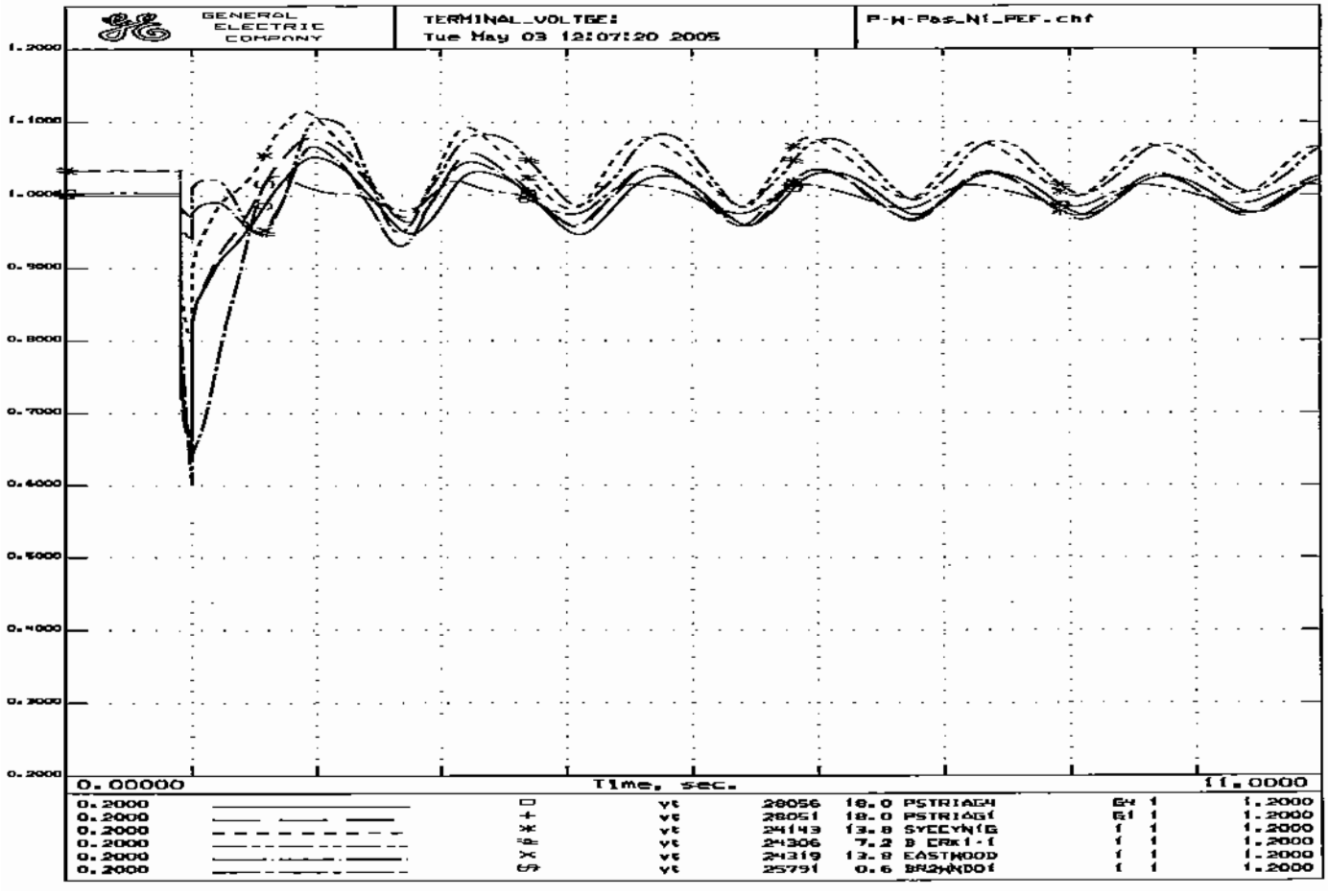
GENERAL ELECTRIC COMPANY
TERMINAL_VOLTGE:
Tue May 03 12:07:20 2005
P-W-Pas_N1_PEF.chf
1.2000
1.1000
1.0000
0.9000
0.8000
0.7000
0.6000
0.5000
0.4000
0.3000
0.2000
0.00000
Time, sec.
11.0000
0.2000 □ vt 28056 18.0 PSTRIAGH EN 1 1.2000
0.2000 + vt 28051 18.0 PSTRIAGI EI 1 1.2000
0.2000 ✳ vt 24143 13.8 SYCCYNIG 1 1 1.2000
0.2000 vt 24306 7.2 B CRK1-1 1 1 1.2000
0.2000 vt 24319 13.8 EASTWOOD 1 1 1.2000
0.2000 vt 25791 0.6 BRYANDO1 1 1 1.2000

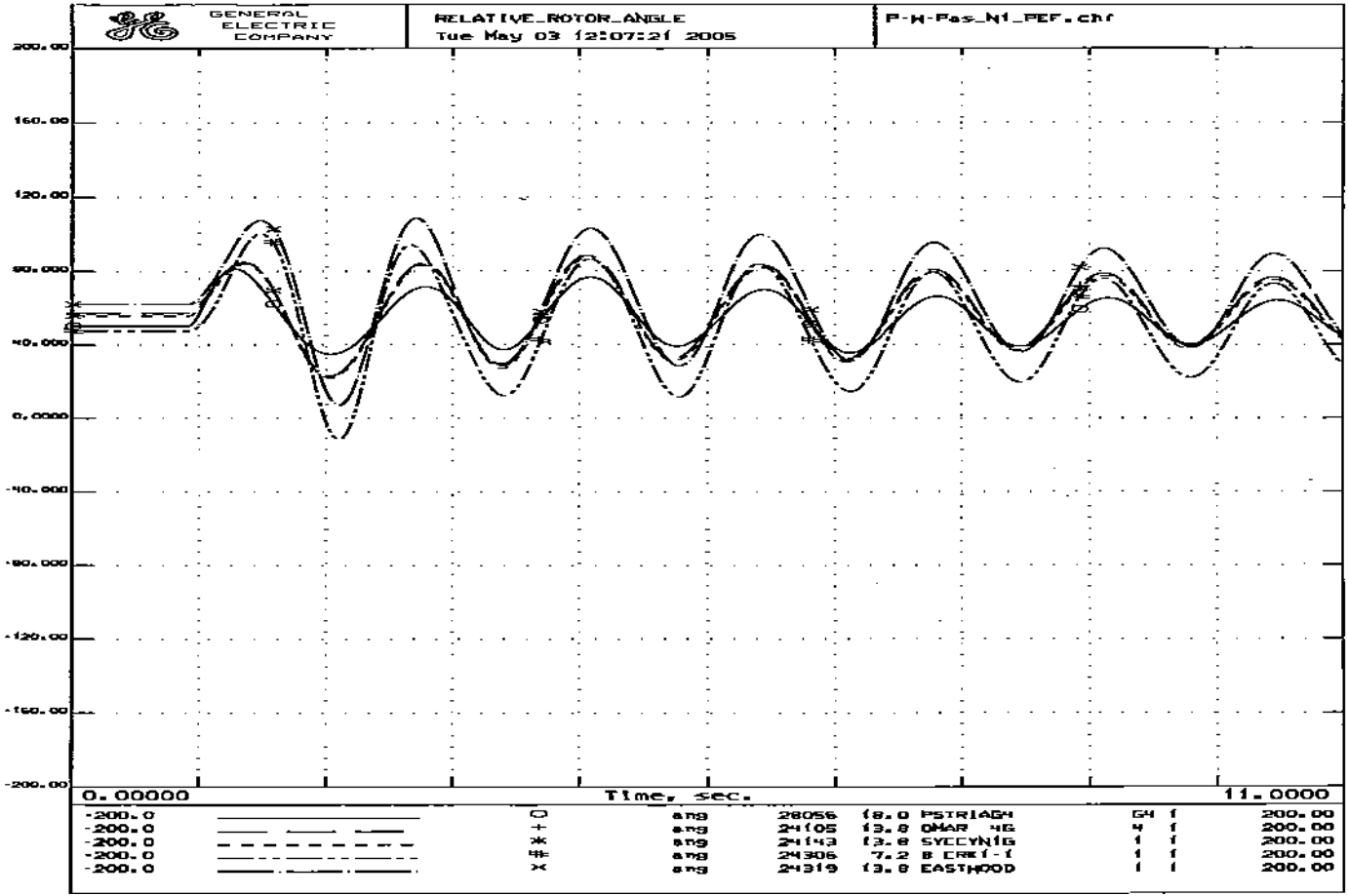
GENERAL ELECTRIC COMPANY
RELATIVE_ROTOR_ANGLE
Tue May 03 12:07:21 2005
P-W-Fas_N1_PEF.chf
200.00
160.00
120.00
80.000
40.000
0.0000
-40.000
-80.000
-120.00
-160.00
-200.00
0.00000
Time, sec.
11.0000
-200.0 ang 28056 18.0 PSTRIAGN G4 1 200.00
-200.0 ang 24105 13.8 OMAR 4G 4 1 200.00
-200.0 ang 24143 13.8 SYCCYNIG 1 1 200.00
-200.0 ang 24306 7.2 B ERKI-1 1 1 200.00
-200.0 ang 24319 13.8 EASTWOOD 1 1 200.00

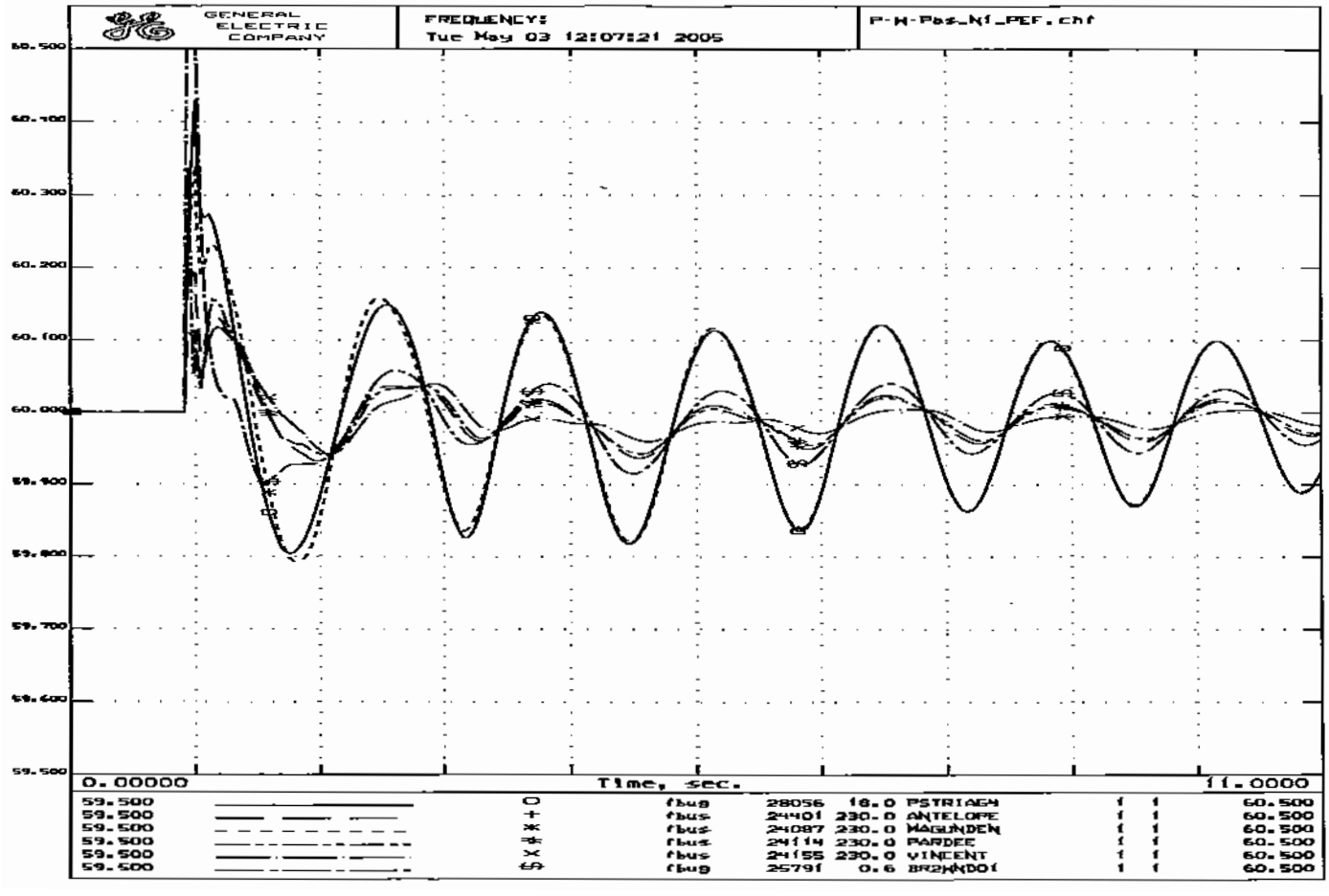
GENERAL ELECTRIC COMPANY
FREQUENCY:
Tue May 03 12:07:21 2005
P-W-Pas_Nf_PEF.chf
60.500
60.400
60.300
60.200
60.100
60.000
59.900
59.800
59.700
59.600
59.500
0.00000
Time, sec.
11.0000
59.500 O fbus 28056 18.0 PSTRIAGH 1 1 60.500
59.500 + fbus 24401 230.0 ANTELOPE 1 1 60.500
59.500 * fbus 24087 230.0 MAGUNDEN 1 1 60.500
59.500 * fbus 24114 230.0 PARDEE 1 1 60.500
59.500 X fbus 24155 230.0 VINCENT 1 1 60.500
59.500 fbus 25791 0.6 BRANDOI 1 1 60.500

```
PostPEF_High_SOM.sav
PostPEF.dyd
TITLE
Calpine Pastoria Add Stability Study: Loss of One 230-KV Line
6-CYCLE 3-Phase Fault at Pardee 230kV Bus
N-1 OUTAGE: Pardee-Pastoria 230kV Line
SYSTEM STABILITY CASE - P-Pas_N1_PostPEF.swt
PostPEF_High_SOM.sav + PostPEF.dyd + P-Pas_N1_PostPEF.swt
RUN 10.0
CC
CC   ***CALPINE PASTORIA ADD DYNAMIC STABILITY ASSESSMENT***
CC   APPLY A 3-PHASE FAULT ON THE PARDEE 230-KV BUS
FB   0.0 "PARDEE   " 230
CC
CC   CLEAR FAULT IN 6 CYCLES
CFB  6.0 "PARDEE   " 230
CC
CC   REMOVE PARDEE-PASTORIA 230-KV LINE
DL   6.0 "PARDEE   " 230, "PASTORIA" 230, "1 "
```

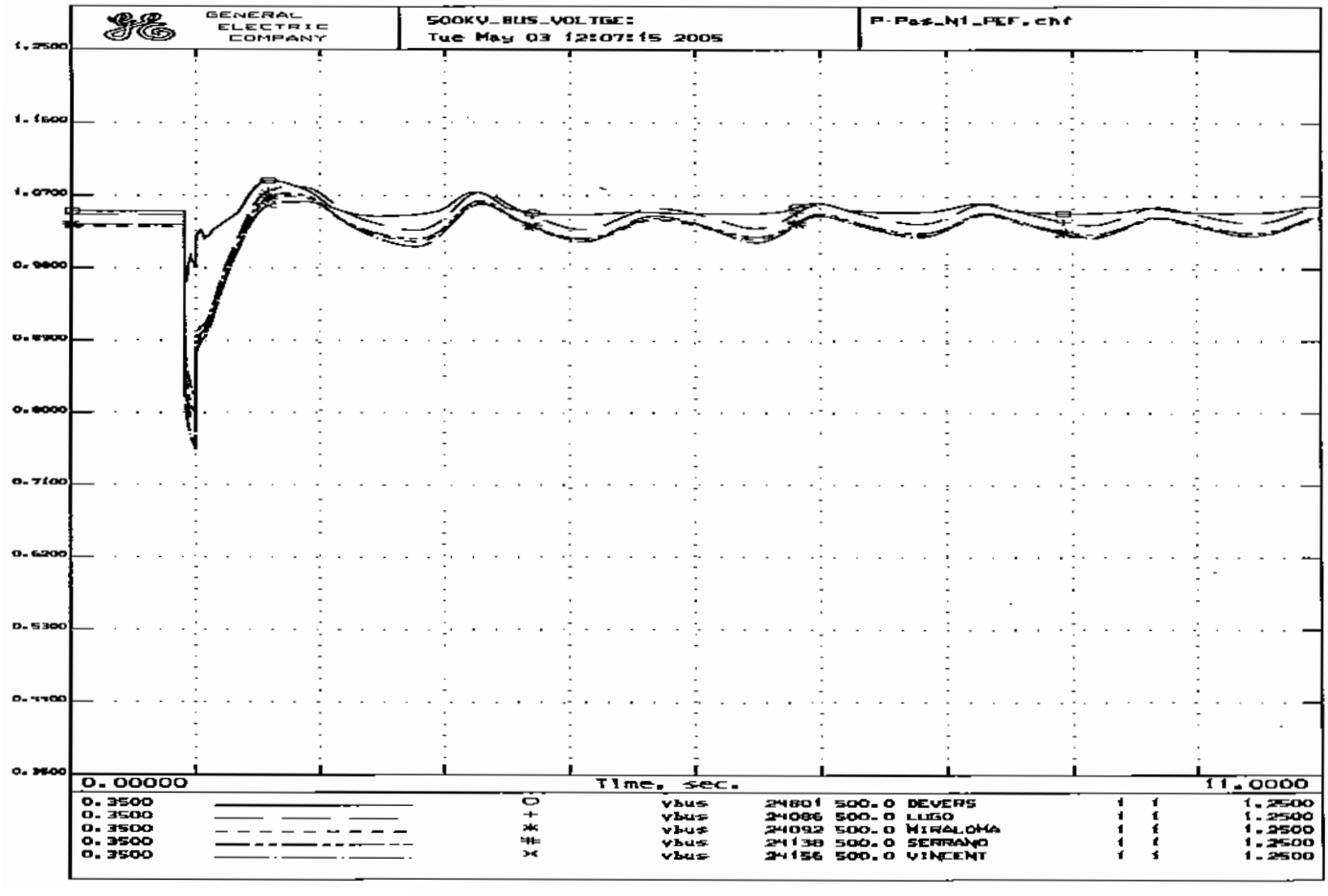
GENERAL ELECTRIC COMPANY
500KV_BUS_VOLTGE:
Tue May 03 12:07:15 2005
P-Pas_N1_PEF.chf
1.2500
1.1600
1.0700
0.9800
0.8900
0.8000
0.7100
0.6200
0.5300
0.4400
0.3500
0.00000
Time, sec.
11.0000
0.3500 O vbus 24801 500.0 DEVERS 1 1 1.2500
0.3500 + vbus 24086 500.0 LUGO 1 1 1.2500
0.3500 * vbus 24092 500.0 MIRALOMA 1 1 1.2500
0.3500 # vbus 24138 500.0 SERRANO 1 1 1.2500
0.3500 X vbus 24156 500.0 VINCENT 1 1 1.2500

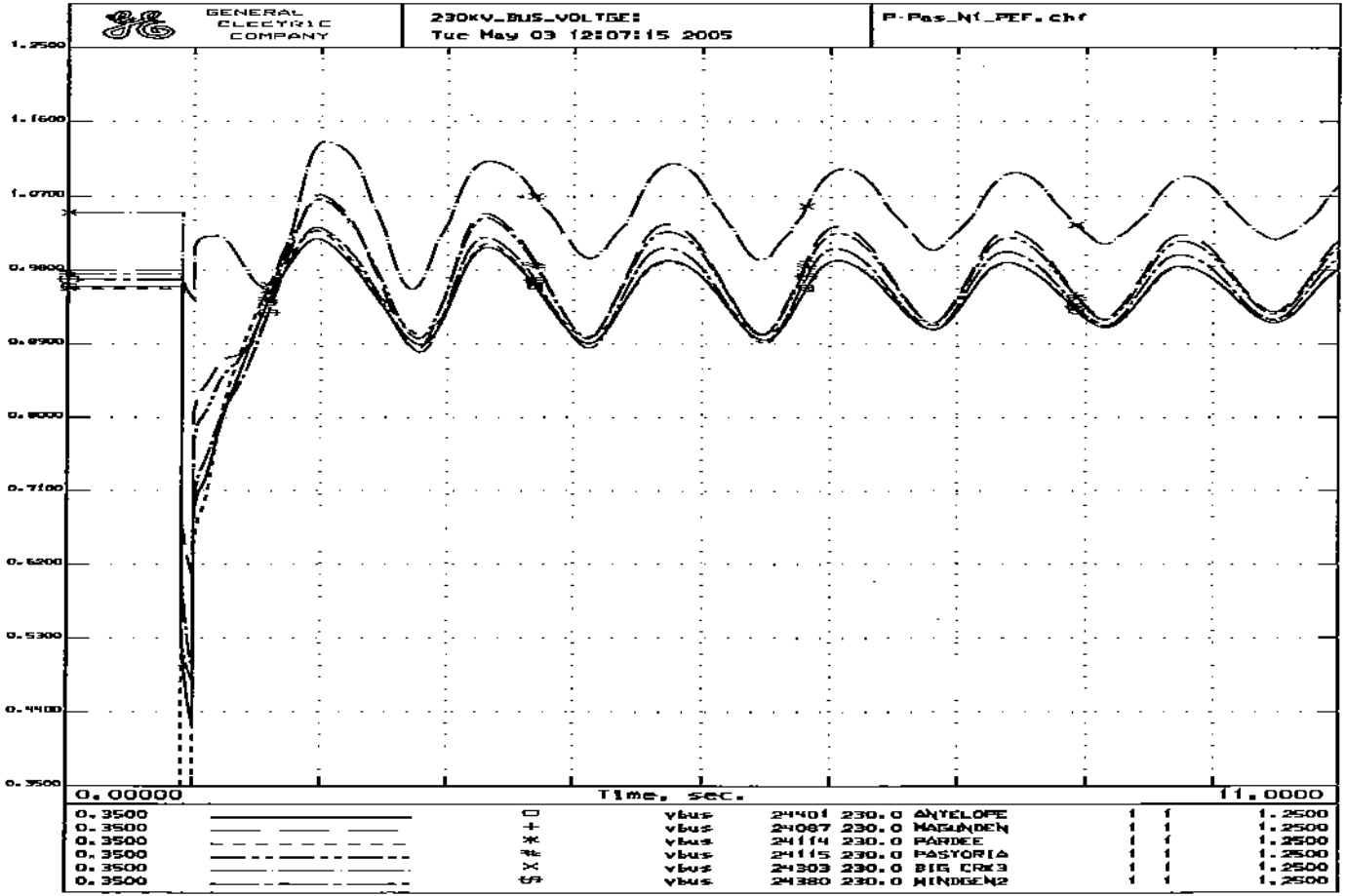
GENERAL ELECTRIC COMPANY
230KV_BUS_VOLTGE:
Tue May 03 12:07:15 2005
P-Pas_N1_PEF.chf
1.2500
1.1600
1.0700
0.9800
0.8900
0.8000
0.7100
0.6200
0.5300
0.4400
0.3500
0.00000
Time, sec.
11.0000
0.3500 □ vbus 24401 230.0 ANTELOPE 1 1 1.2500
0.3500 + vbus 24087 230.0 MAGUNDEN 1 1 1.2500
0.3500 * vbus 24114 230.0 PARDEE 1 1 1.2500
0.3500 # vbus 24115 230.0 PASTORIA 1 1 1.2500
0.3500 X vbus 24303 230.0 BIG CRK3 1 1 1.2500
0.3500 vbus 24380 230.0 WINDGEN2 1 1 1.2500

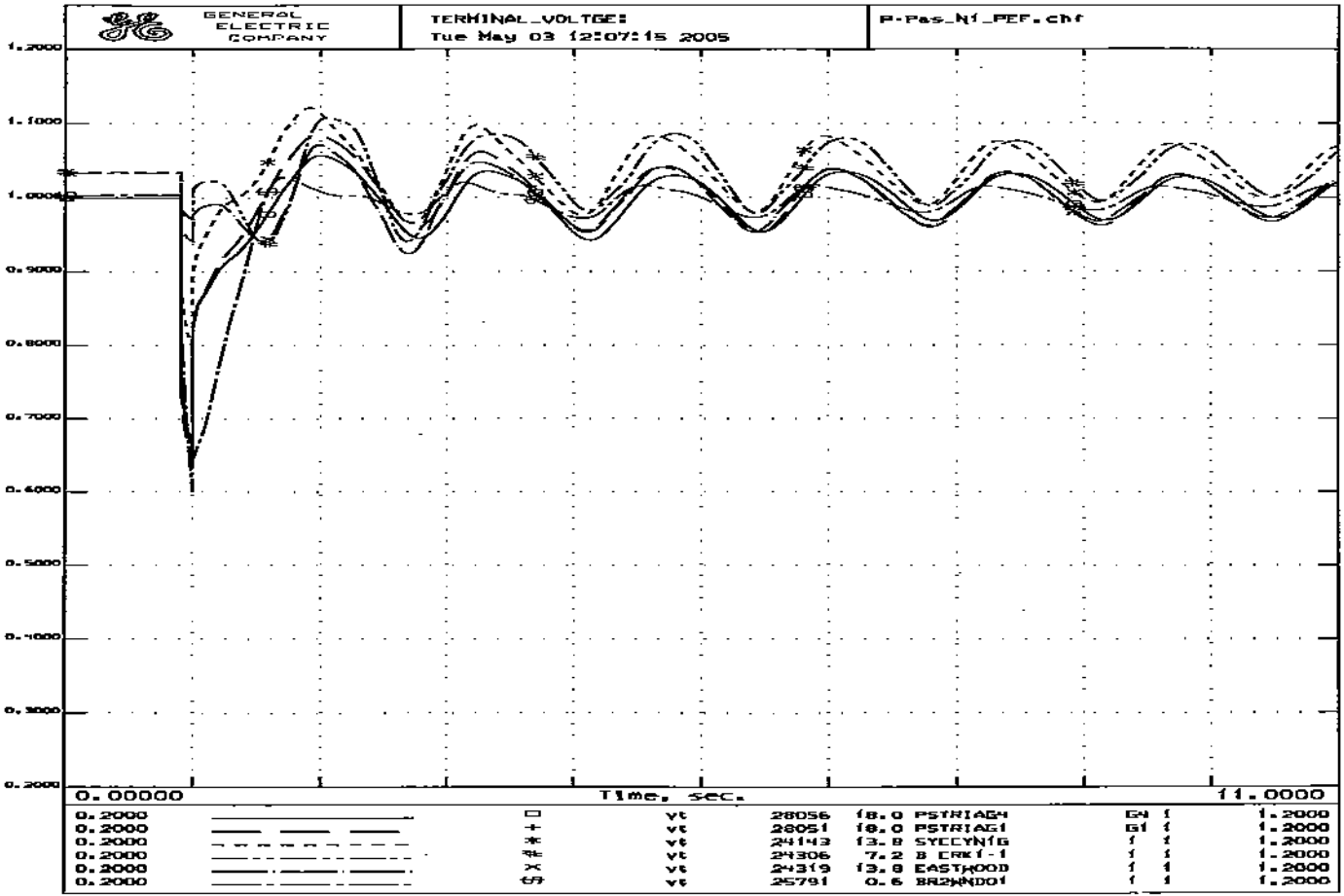
GENERAL ELECTRIC COMPANY
TERMINAL_VOLTGE:
Tue May 03 12:07:15 2005
P-Pas_N1_PEF.chf
1.2000
1.1000
1.0000
0.9000
0.8000
0.7000
0.6000
0.5000
0.4000
0.3000
0.2000
0.00000
Time, sec.
11.0000
0.2000 vt 28056 18.0 PSTRIAG4 G4 1 1.2000
0.2000 vt 28051 18.0 PSTRIAG1 G1 1 1.2000
0.2000 vt 24143 13.8 SYCCYN16 1 1 1.2000
0.2000 vt 24306 7.2 B CRK1-1 1 1 1.2000
0.2000 vt 24319 13.8 EASTWOOD 1 1 1.2000
0.2000 vt 25791 0.6 BR2WND01 1 1 1.2000

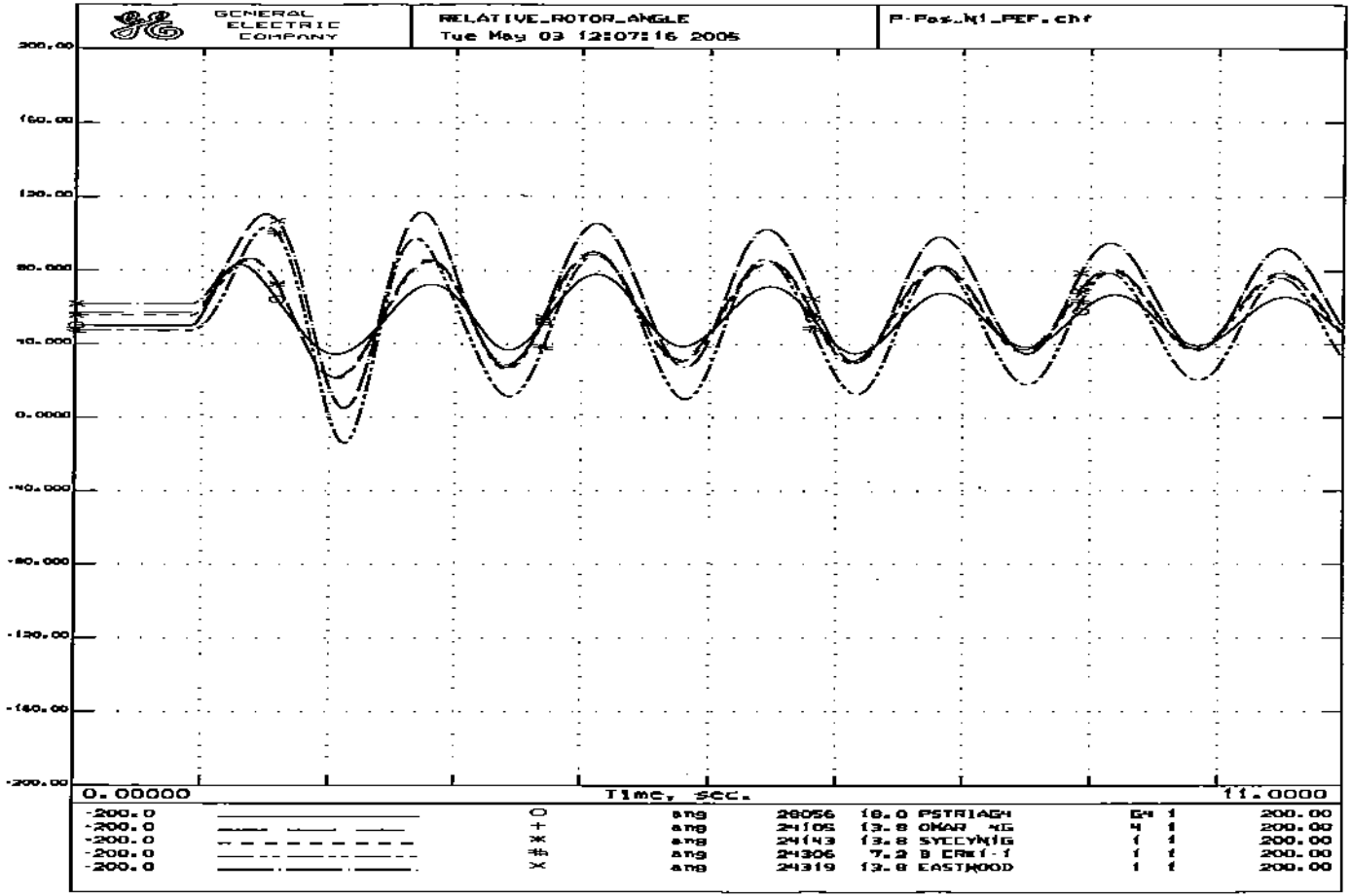
GENERAL ELECTRIC COMPANY
RELATIVE_ROTOR_ANGLE
Tue May 03 12:07:16 2005
P-Pos_N1_PEF.chf
200.00
160.00
120.00
80.000
40.000
0.0000
-40.000
-80.000
-120.00
-160.00
-200.00
0.00000
Time, sec.
11.0000
-200.0 ○ ang 28056 18.0 PSTRIAGN G4 1 200.00
-200.0 + ang 24105 13.8 OMAR XG 4 1 200.00
-200.0 * ang 24143 13.8 SYCCYNIG 1 1 200.00
-200.0 # ang 24306 7.2 B ERE1-1 1 1 200.00
-200.0 × ang 24319 13.8 EASTWOOD 1 1 200.00

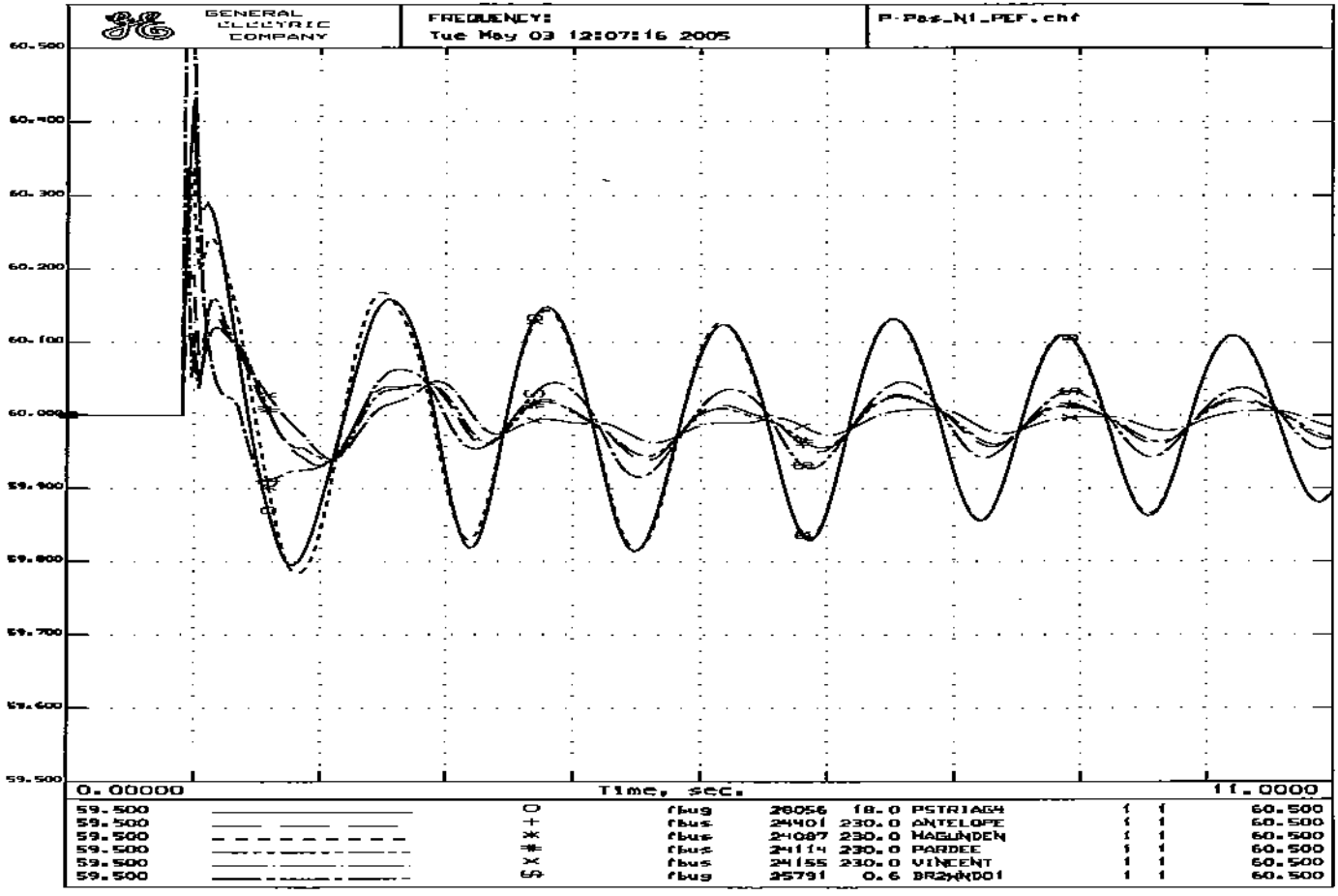
GENERAL ELECTRIC COMPANY
FREQUENCY:
Tue May 03 12:07:16 2005
P-Pa#_N1_PEF.chf
60.500
60.400
60.300
60.200
60.100
60.000
59.900
59.800
59.700
59.600
59.500
0.00000
Time, sec.
11.0000
59.500 rbus 28056 18.0 PSTRIAG4 1 1 60.500
59.500 rbus 24401 230.0 ANTELOPE 1 1 60.500
59.500 rbus 24087 230.0 HAGUNDEN 1 1 60.500
59.500 rbus 24114 230.0 PARDEE 1 1 60.500
59.500 rbus 24155 230.0 VINCENT 1 1 60.500
59.500 rbus 25791 0.6 BR2WND01 1 1 60.500

```
PostPEF_High_SOM.sav
PostPEF.dyd
TITLE
Calpine Pastoria Add Stability Study: Loss of One 230-KV Line
6-CYCLE 3-Phase Fault at Pastoria 230kV Bus
N-1 OUTAGE: Pardee-Pastoria-Warne 230kV Line
SYSTEM STABILITY CASE - Pas-W-P_N1_PostPEF.swt
PostPEF_High_SOM.sav + PostPEF.dyd + Pas-W-P_N1_PostPEF.swt
RUN 10.0
CC
CC   ***CALPINE PASTORIA ADD DYNAMIC STABILITY ASSESSMENT***
CC   APPLY A 3-PHASE FAULT ON THE PASTORIA 230-KV BUS
FB   0.0 "PASTORIA" 230
CC
CC   CLEAR FAULT IN 6 CYCLES
CFB  6.0 "PASTORIA" 230
CC
CC   REMOVE PARDEE-PASTORIA-WARNE 230-KV LINE
TG   6.0 "WARNE1   " 13.80 "1 "
TG   6.0 "WARNE2   " 13.80 "1 "
DL   6.0 "PARDEE   " 230.  "WARNETAP" 230.  "1 "
DL   6.0 "WARNE    " 230.  "WARNETAP" 230.  "1 "
DL   6.0 "PASTORIA" 230.  "WARNETAP" 230.  "1 "
```

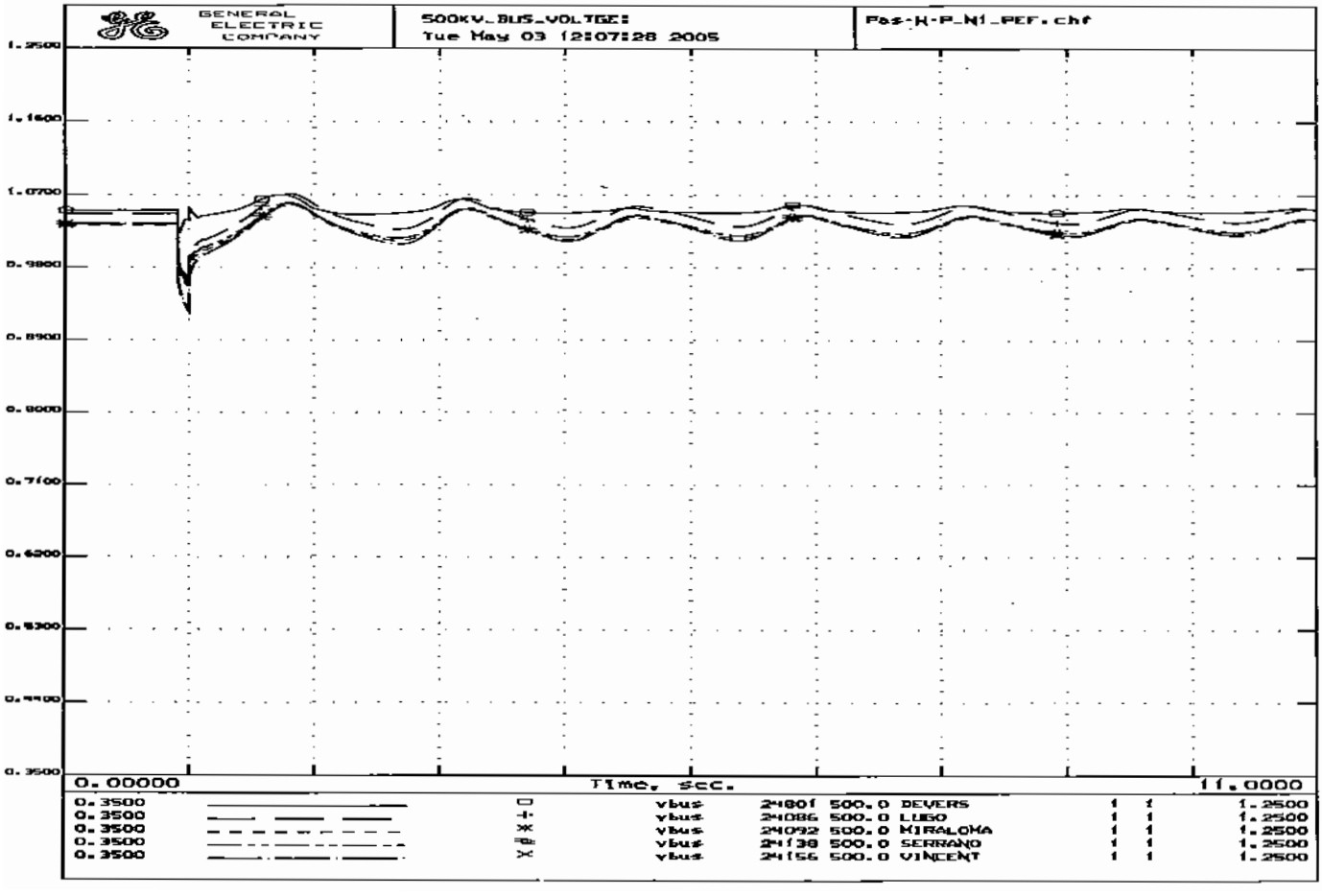
GENERAL ELECTRIC COMPANY
500KV_BUS_VOLTGE:
Tue May 03 12:07:28 2005
Fas-H-P_N1_PEF.chf
1.2500
1.1600
1.0700
0.9800
0.8900
0.8000
0.7100
0.6200
0.5300
0.4400
0.3500
0.00000
Time, sec.
11.0000
0.3500 □ vbus 24801 500.0 DEVERS 1 1 1.2500
0.3500 + vbus 24086 500.0 LUGO 1 1 1.2500
0.3500 * vbus 24092 500.0 MIRALOMA 1 1 1.2500
0.3500 vbus 24138 500.0 SERRANO 1 1 1.2500
0.3500 X vbus 24156 500.0 VINCENT 1 1 1.2500

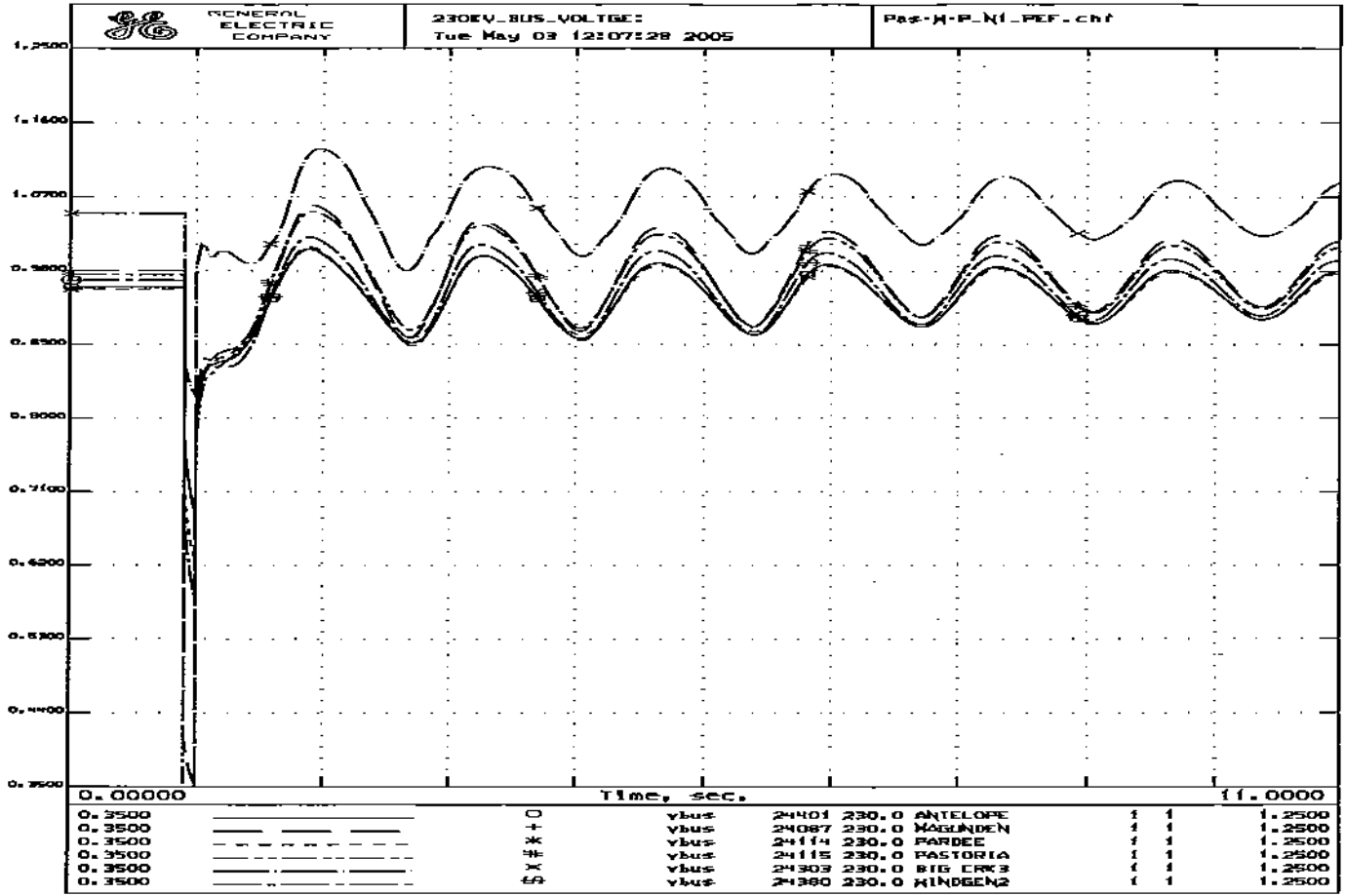
GENERAL ELECTRIC COMPANY
230KV_BUS_VOLTGE:
Tue May 03 12:07:28 2005
Pas-H-P_N1_PEF.chf
1.2500
1.1600
1.0700
0.9800
0.8900
0.8000
0.7100
0.6200
0.5300
0.4400
0.3500
0.00000
Time, sec.
11.0000
0.3500 O vbus 24401 230.0 ANTELOPE 1 1 1.2500
0.3500 + vbus 24087 230.0 MAGUNDEN 1 1 1.2500
0.3500 * vbus 24114 230.0 PARDEE 1 1 1.2500
0.3500 # vbus 24115 230.0 PASTORIA 1 1 1.2500
0.3500 X vbus 24303 230.0 BIG CRK3 1 1 1.2500
0.3500 vbus 24380 230.0 WINDGEN2 1 1 1.2500

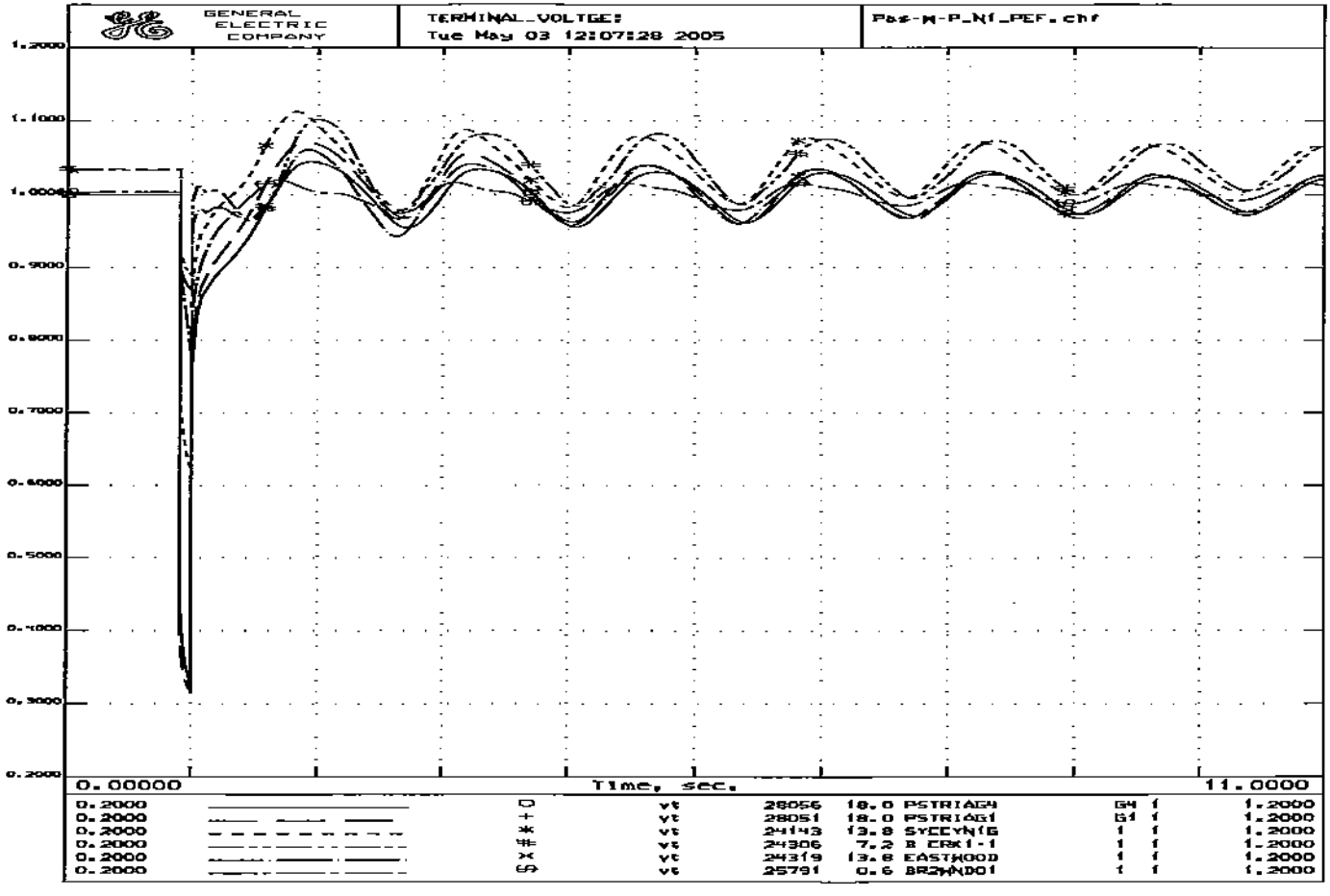
GENERAL ELECTRIC COMPANY
TERMINAL_VOLTGE:
Tue May 03 12:07:28 2005
Pas-W-P_N1_PEF.chf
1.2000
1.1000
1.0000
0.9000
0.8000
0.7000
0.6000
0.5000
0.4000
0.3000
0.2000
0.00000
Time, sec.
11.0000
0.2000 vt 28056 18.0 PSTRIAG4 G4 1 1.2000
0.2000 vt 28051 18.0 PSTRIAG1 G1 1 1.2000
0.2000 vt 24143 13.8 SYCCYN1G 1 1 1.2000
0.2000 vt 24306 7.2 B CRK1-1 1 1 1.2000
0.2000 vt 24319 13.8 EASTWOOD 1 1 1.2000
0.2000 vt 25791 0.6 BR2WNDO1 1 1 1.2000

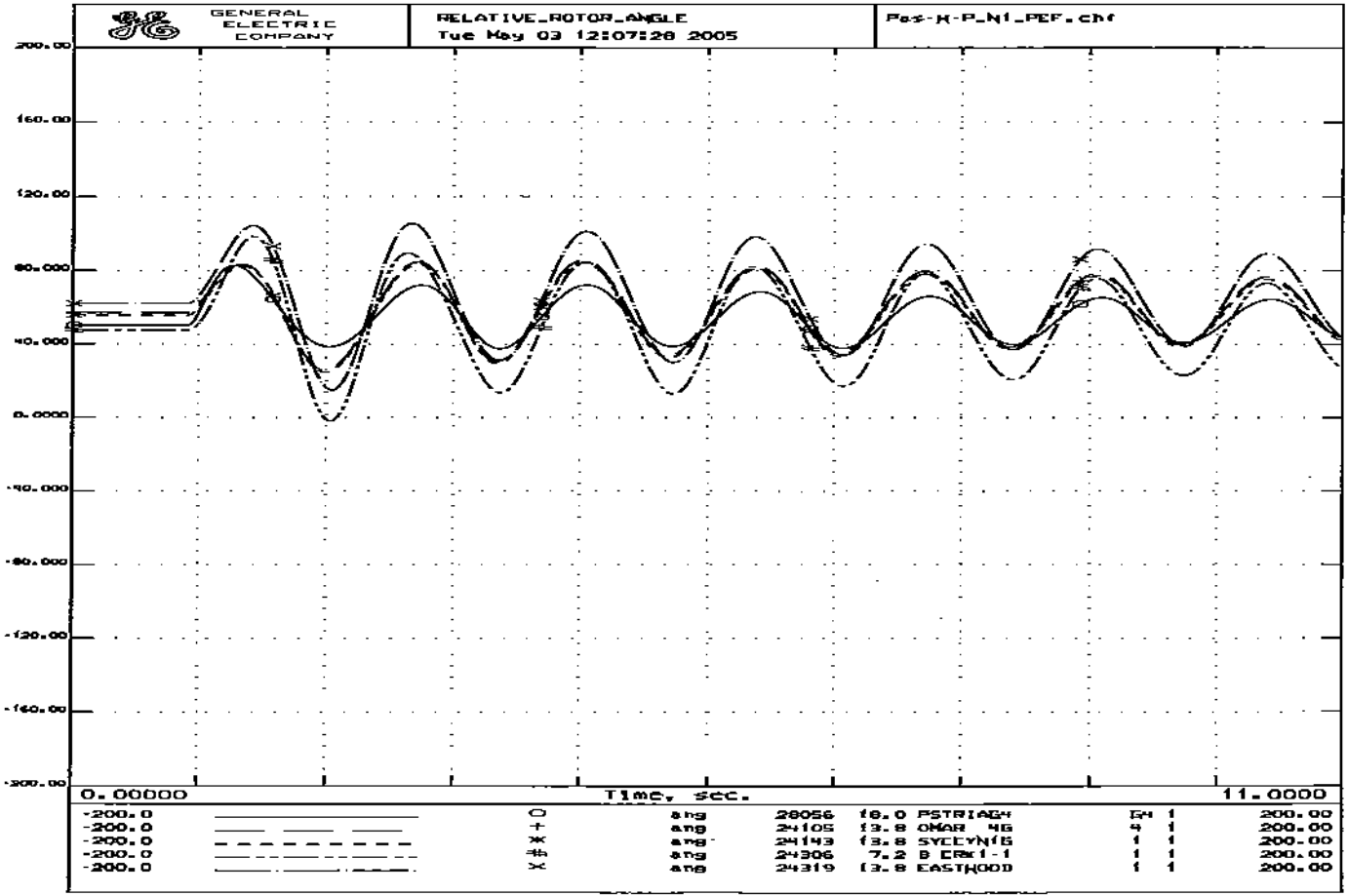
GENERAL ELECTRIC COMPANY
RELATIVE_ROTOR_ANGLE
Tue May 03 12:07:28 2005
Pos-K-P_N1_PEF.chf
200.00
160.00
120.00
80.000
40.000
0.0000
-40.000
-80.000
-120.00
-160.00
-200.00
0.00000
Time, sec.
11.0000
-200.0 ang 20056 [8.0 PSTRIAGH 4 1 200.00
-200.0 + ang 24105 [3.8 OMAR 4G 4 1 200.00
-200.0 * ang 24143 [3.8 SYCEYN[G 1 1 200.00
-200.0 # ang 24306 7.2 B ERK1-1 1 1 200.00
-200.0 X ang 24319 [3.8 EASTWOOD 1 1 200.00

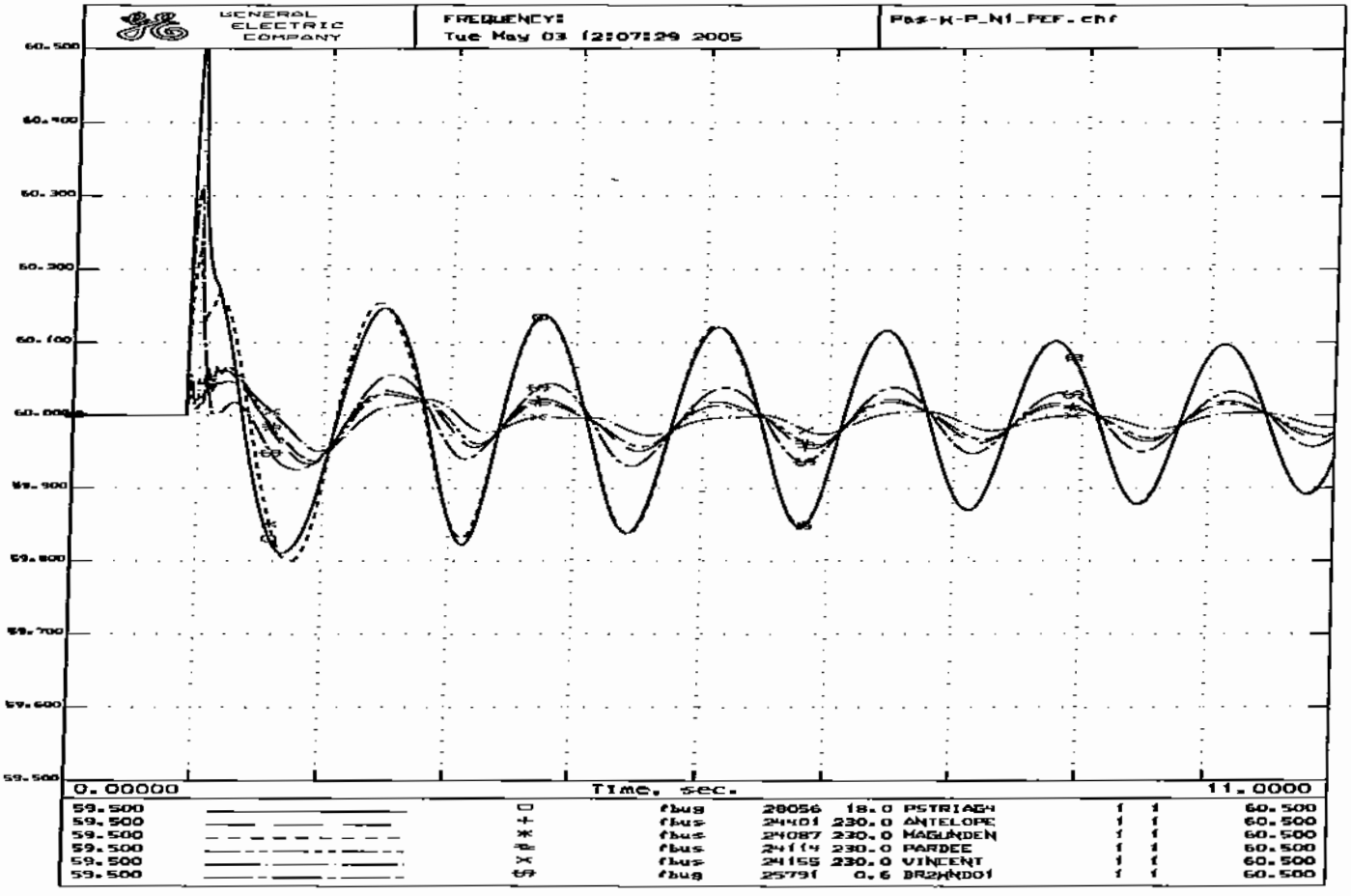
GENERAL ELECTRIC COMPANY
FREQUENCY:
Tue May 03 12:07:29 2005
Pos-K-P_N1_REF.chf
60.500
60.400
60.300
60.200
60.100
60.000
59.900
59.800
59.700
59.600
59.500
0.00000
Time, sec.
11.0000
59.500 □ fbus 28056 18.0 PSTRIAGH 1 1 60.500
59.500 + fbus 24401 230.0 ANTELOPE 1 1 60.500
59.500 * fbus 24087 230.0 MAGUNDEN 1 1 60.500
59.500 fbus 24114 230.0 PARDEE 1 1 60.500
59.500 × fbus 24155 230.0 VINCENT 1 1 60.500
59.500 fbus 25791 0.6 BRZHNDO1 1 1 60.500

APPENDIX F

STABILITY STUDIES
N-2

PRE-PROJECT

```
PrePEF_MAX_SOM.sav
PrePEF.dyd
TITLE
Calpine Pastoria Addition Stability Study: Loss of Two 230-kV Lines
6-CYCLE 1-Phase Fault at Antelope 230kV Bus
N-2 OUTAGE: Magunden-Antelope No.1 and Antelope-Windgen2 230kV Lines
SYSTEM STABILITY CASE - PEF.swt
PrePEF_MAX_SOM.sav + PrePEF.dyd + PrePEF_MAX_SOM_N2.swt
RUN 10.0
CC
CC   ***CALPINE PASTORIA ADDITION DYNAMIC STABILITY ASSESSMENT***
CC   APPLY A 1-PHASE-TO-GROUND FAULT ON THE ANTELOPE 230-KV BUS
FB   0.0 "ANTELOPE" 230  0.00204 0.02565
CC
CC   CLEAR FAULT IN 6 CYCLES
CFB  6.0 "ANTELOPE" 230
CC
CC   REMOVE MAGUNDEN-ANTELOPE NO.1 230-KV LINE
DL   6.0 "MAGUNDEN" 230. "ANTELOPE" 230. "1 "
CC
CC   REMOVE MAGUNDEN-WINDGEN2 230-KV LINE
DL   6.0 "ANTELOPE" 230. "WINDGEN2" 230. "1 "
CC
CC   IMPLEMENT PEF SPECIAL PROTECTION SCHEME FOR N-2
TG   12.0 "PSTRIAS1" 18.00 "S1"
TG   12.0 "PSTRIAG1" 18.00 "G1"
TG   12.0 "PSTRIAG2" 18.00 "G2"
TG   12.0 "PSTRIAS2" 18.00 "S2"
TG   12.0 "PSTRIAG3" 18.00 "G3"
CC
CC   INITIATE S2L-68 STABILITY TRIP
TG   18.0 "MAMOTH1G" 13.80 "1 "
TG   18.0 "MAMOTH2G" 13.80 "2 "
TG   18.0 "EASTWOOD" 13.80 "1 "
```

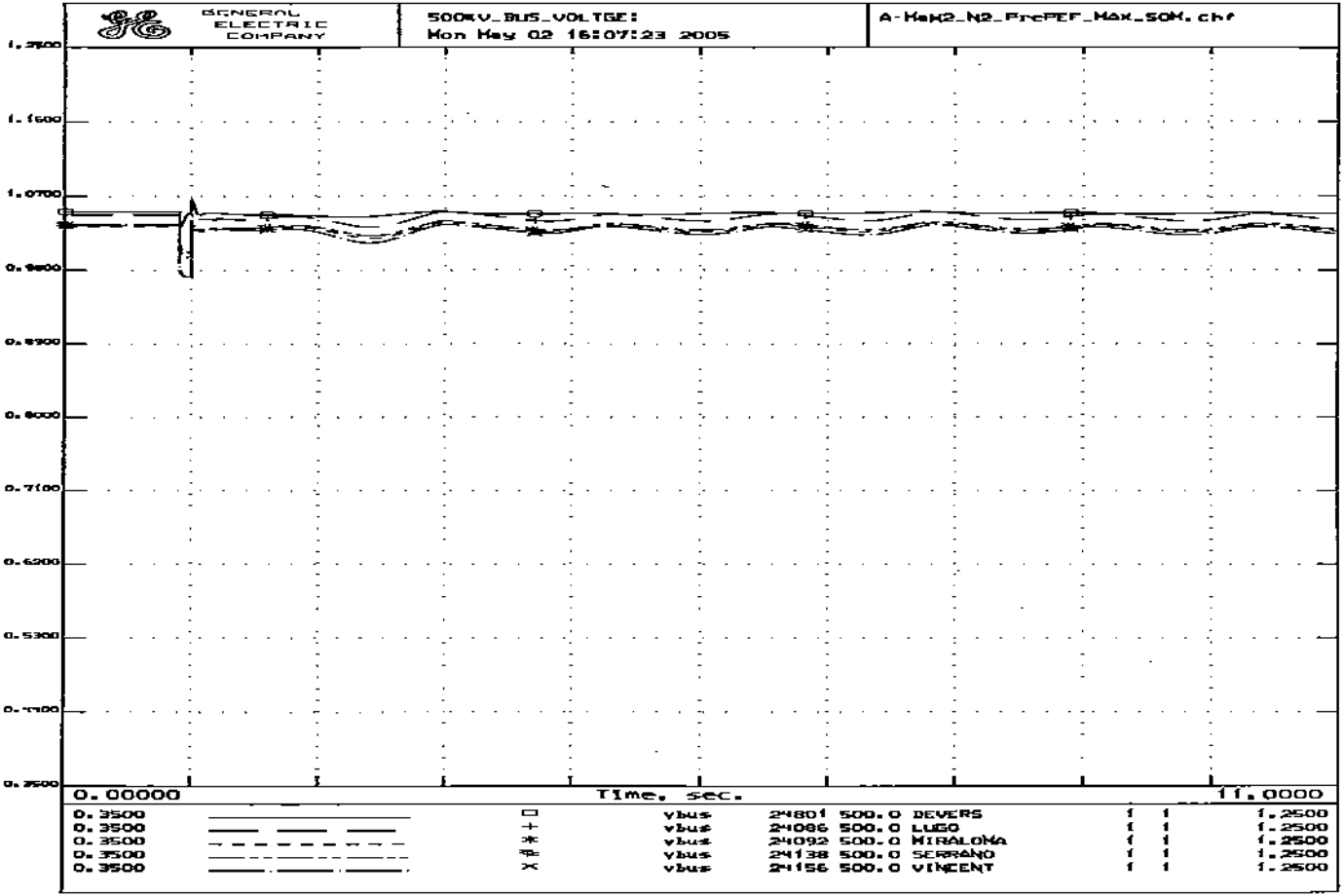
GENERAL ELECTRIC COMPANY
500KV_BUS_VOLTGE:
Mon May 02 16:07:23 2005
A-MaW2_N2_FrcPEF_Max_SOM.chf
1.2500
1.1600
1.0700
0.9800
0.8900
0.8000
0.7100
0.6200
0.5300
0.4400
0.3500
0.00000
Time, sec.
11.0000
0.3500 □ vbus 24801 500.0 DEVERS 1 1 1.2500
0.3500 + vbus 24086 500.0 LUGO 1 1 1.2500
0.3500 * vbus 24092 500.0 MIRALOMA 1 1 1.2500
0.3500 ✱ vbus 24138 500.0 SERRANO 1 1 1.2500
0.3500 × vbus 24156 500.0 VINCENT 1 1 1.2500

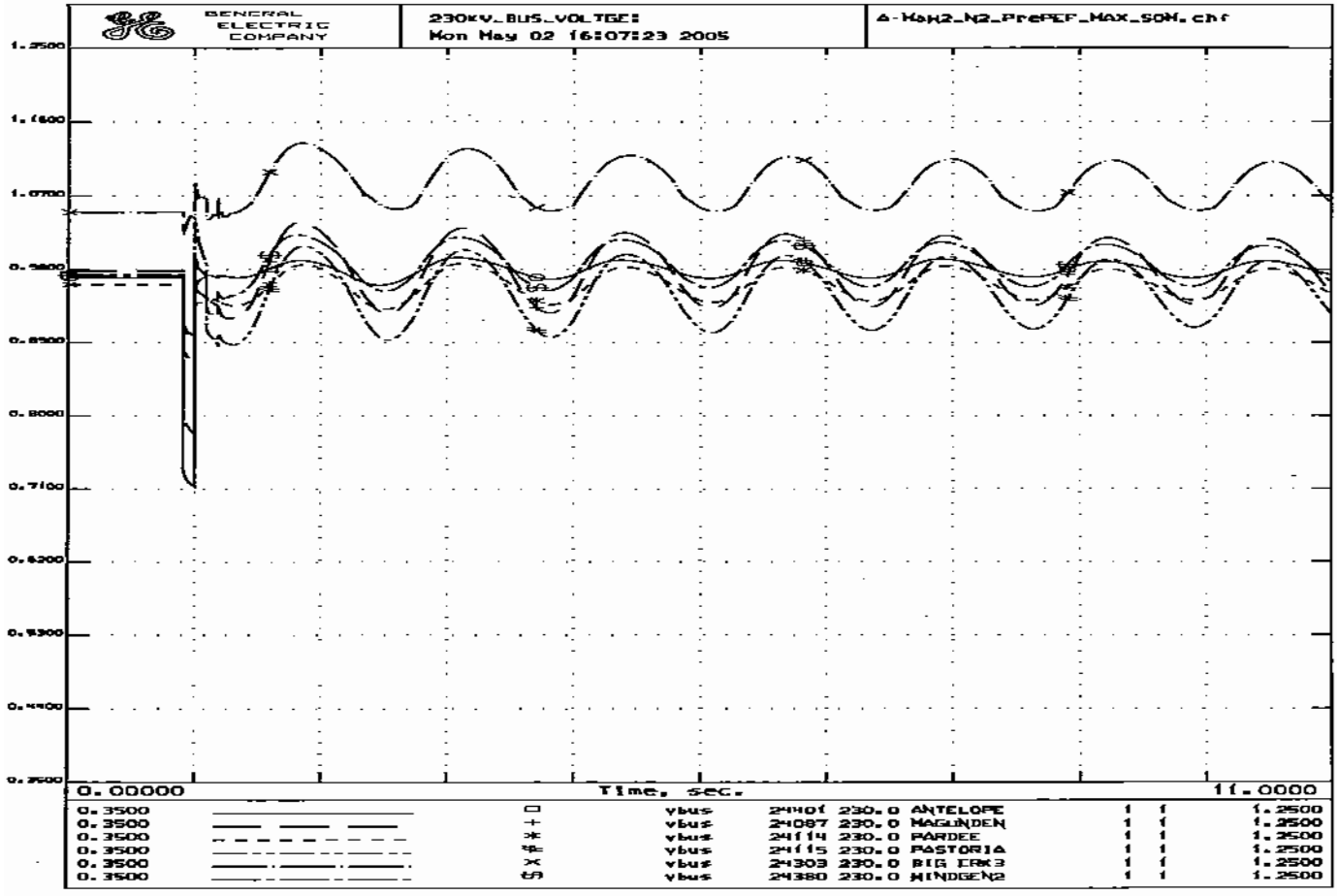
GENERAL ELECTRIC COMPANY
230kV_BUS_VOLTGE:
Mon May 02 16:07:23 2005
4-KaH2_N2_PrePEF_MAX_SOH.chf
1.2500
1.1600
1.0700
0.9800
0.8900
0.8000
0.7100
0.6200
0.5300
0.4400
0.3500
0.00000
Time, sec.
11.0000
0.3500 ▭ vbus 24401 230.0 ANTELOPE 1 1 1.2500
0.3500 + vbus 24087 230.0 MAGUNDEN 1 1 1.2500
0.3500 * vbus 24114 230.0 PARDEE 1 1 1.2500
0.3500 vbus 24115 230.0 PASTORIA 1 1 1.2500
0.3500 × vbus 24303 230.0 BIG ERK3 1 1 1.2500
0.3500 vbus 24380 230.0 WINDGEN2 1 1 1.2500

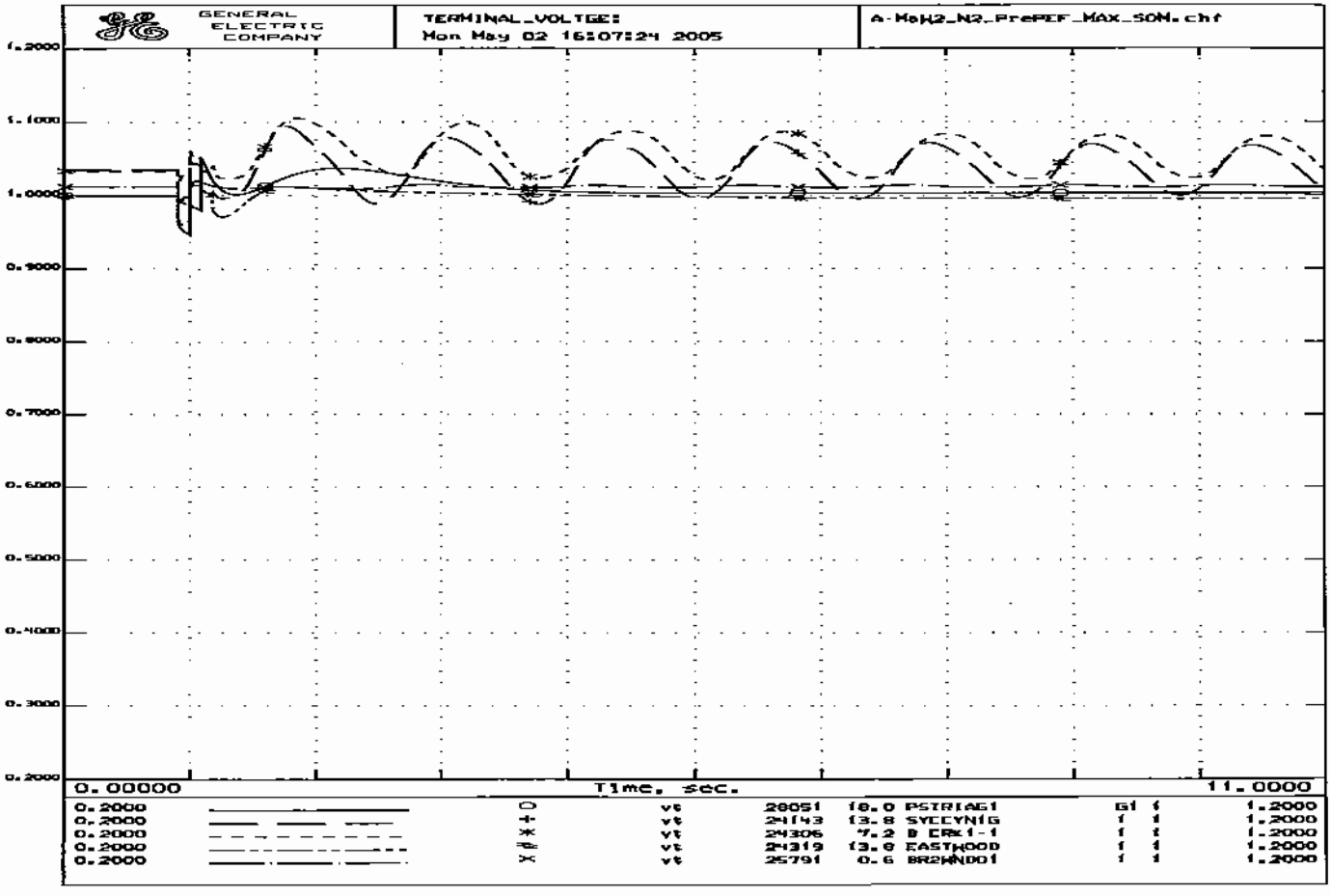
GENERAL ELECTRIC COMPANY
TERMINAL_VOLTGE:
Mon May 02 16:07:24 2005
A-MaW2_N2_PrePEF_MAX_SON.chf
1.2000
1.1000
1.0000
0.9000
0.8000
0.7000
0.6000
0.5000
0.4000
0.3000
0.2000
0.00000
Time, sec.
11.0000
0.2000 ○ vt 28051 18.0 PSTRIAG1 G1 1 1.2000
0.2000 + vt 24143 13.8 SYCCYNIG 1 1 1.2000
0.2000 ✳ vt 24306 7.2 B CRX1-1 1 1 1.2000
0.2000 vt 24319 13.8 EASTWOOD 1 1 1.2000
0.2000 × vt 25791 0.6 BR2WNDO1 1 1 1.2000

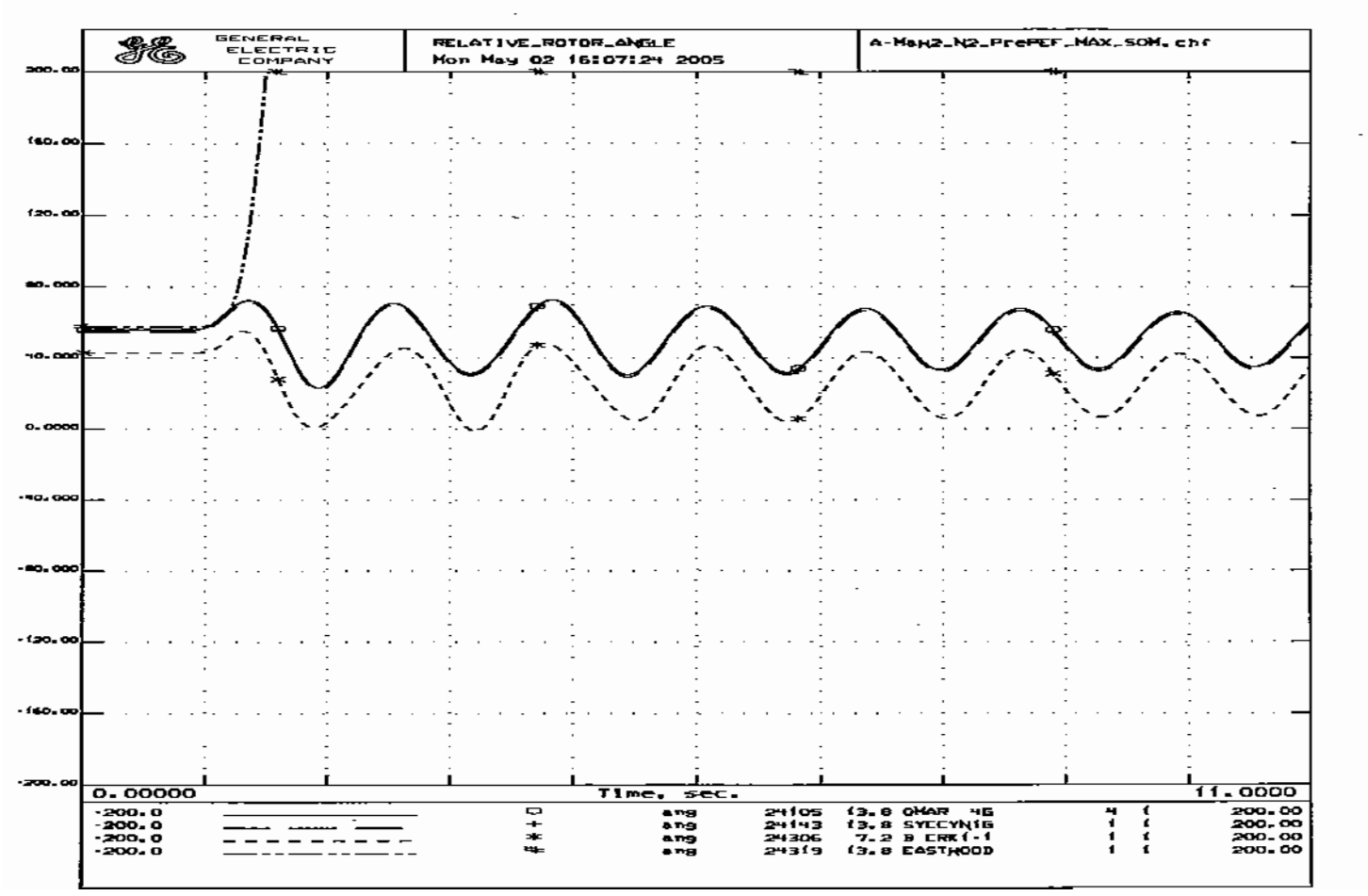
GENERAL ELECTRIC COMPANY
RELATIVE_ROTOR_ANGLE
Mon May 02 16:07:24 2005
A-MaH2_N2_PrePEF_MAX_SOM.chf
200.00
160.00
120.00
80.000
40.000
0.0000
-40.000
-80.000
-120.00
-160.00
-200.00
0.00000
Time, sec.
11.0000
-200.0 □ ang 24105 13.8 OMAR 4E 4 1 200.00
-200.0 + ang 24143 13.8 SYECYN1G 1 1 200.00
-200.0 * ang 24306 7.2 B ERK1-1 1 1 200.00
-200.0 # ang 24319 13.8 EASTWOOD 1 1 200.00

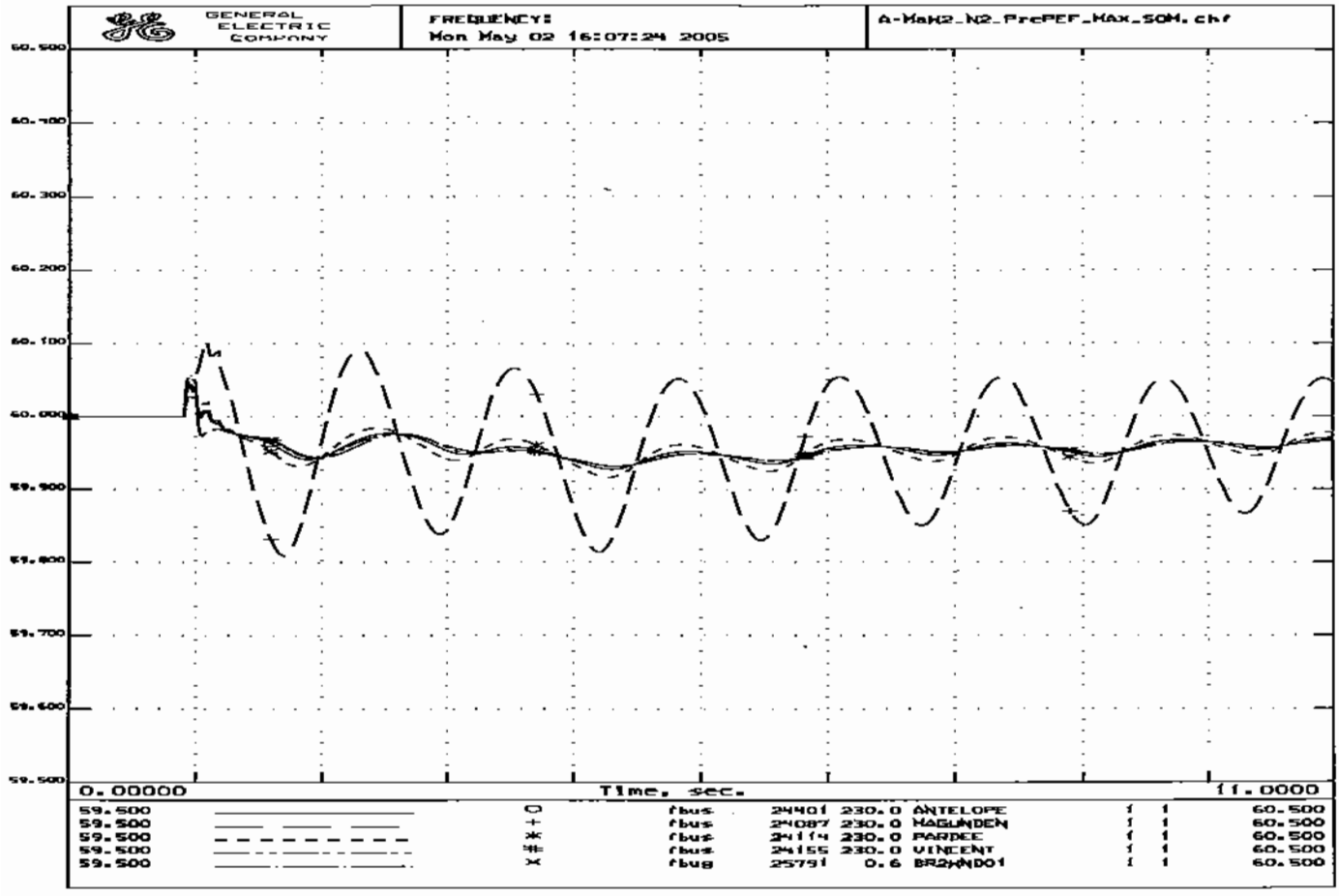
GENERAL ELECTRIC COMPANY
FREQUENCY:
Mon May 02 16:07:24 2005
A-MAH2_N2_PrePEF_MAX_SOM.chf
60.500
60.400
60.300
60.200
60.100
60.000
59.900
59.800
59.700
59.600
59.500
0.00000
Time, sec.
11.0000
59.500 ○ fbus 24401 230.0 ANTELOPE 1 1 60.500
59.500 + fbus 24087 230.0 MAGUNDEN 1 1 60.500
59.500 ✳ fbus 24114 230.0 PARDEE 1 1 60.500
59.500 ✱ fbus 24155 230.0 VINCENT 1 1 60.500
59.500 × fbus 25791 0.6 BRANDO1 1 1 60.500

```
PrePEF_MAX_SOM.sav
PrePEF.dyd
TITLE
Calpine Pastoria Addition Stability Study: Loss of Two 230-kV Lines
6-CYCLE 1-Phase Fault at Antelope 230kV Bus
N-2 OUTAGE: Mesa-Antelope 230kV Line
SYSTEM STABILITY CASE - PEF.swt
PrePEF_MAX_SOM.sav + PrePEF.dyd + PEF.swt
RUN 10.0
CC
CC   ***Calpine Pastoria Addition DYNAMIC STABILITY ASSESSMENT***
CC   APPLY A 1-PHASE-TO-GROUND FAULT ON THE ANTELOPE 230-KV BUS
FB   0.0 "ANTELOPE" 230  0.00204 0.02565
CC
CC   CLEAR FAULT IN 6 CYCLES
CFB  6.0 "ANTELOPE" 230
CC
CC   REMOVE MESA-ANTELOPE 230-KV LINE
DL   6.0 "MESA CAL" 230. "ANTELOPE" 230. "1 "
CC
CC   REMOVE VINCENT-ANTELOPE 230-KV LINE
DL   6.0 "VINCENT " 230. "ANTELOPE" 230. "1 "
CC
CC   IMPLEMENT PEF SPECIAL PROTECTION SCHEME FOR N-2
TG   12.0 "PSTRIAS1" 18.00 "S1"
TG   12.0 "PSTRIAG1" 18.00 "G1"
TG   12.0 "PSTRIAG2" 18.00 "G2"
TG   12.0 "PSTRIAS2" 18.00 "S2"
TG   12.0 "PSTRIAG3" 18.00 "G3"
CC
CC   INITIATE SEL-68 STABILITY TRIP
TG   18.0 "MAMOTH1G" 13.80 "1 "
TG   18.0 "MAMOTH2G" 13.80 "2 "
TG   18.0 "EASTWOOD" 13.80 "1 "
```

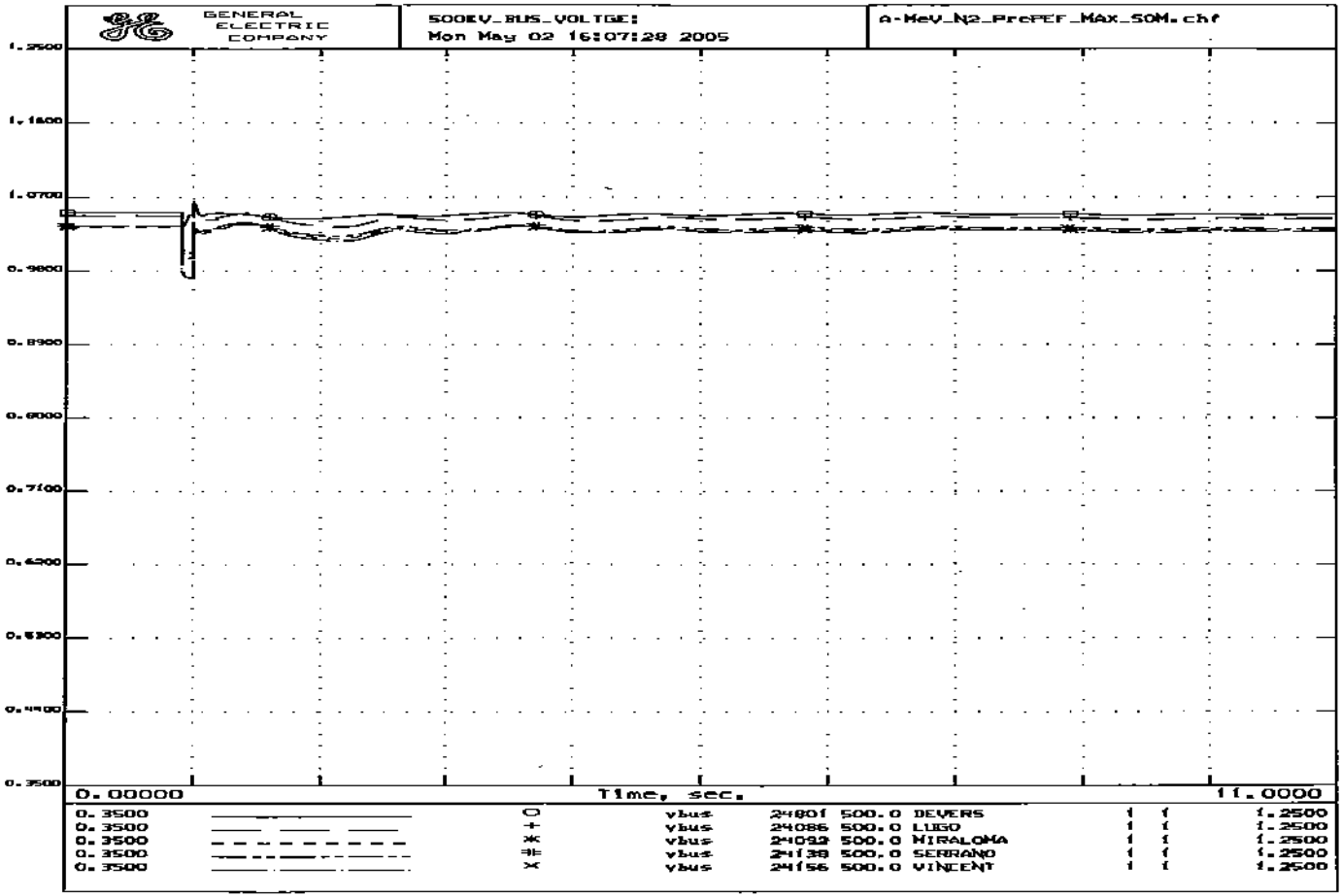
GENERAL ELECTRIC COMPANY
500KV_BUS_VOLTGE:
Mon May 02 16:07:28 2005
a-MeV_N2_PrePEF_MAX_SOM.chf
1.2500
1.1800
1.0700
0.9800
0.8900
0.8000
0.7100
0.6200
0.5300
0.4400
0.3500
0.00000
Time, sec.
11.0000
0.3500 O vbus 24801 500.0 DEVERS 1 1 1.2500
0.3500 + vbus 24086 500.0 LUGO 1 1 1.2500
0.3500 * vbus 24092 500.0 MIRALOMA 1 1 1.2500
0.3500 # vbus 24138 500.0 SERRANO 1 1 1.2500
0.3500 X vbus 24156 500.0 VINCENT 1 1 1.2500

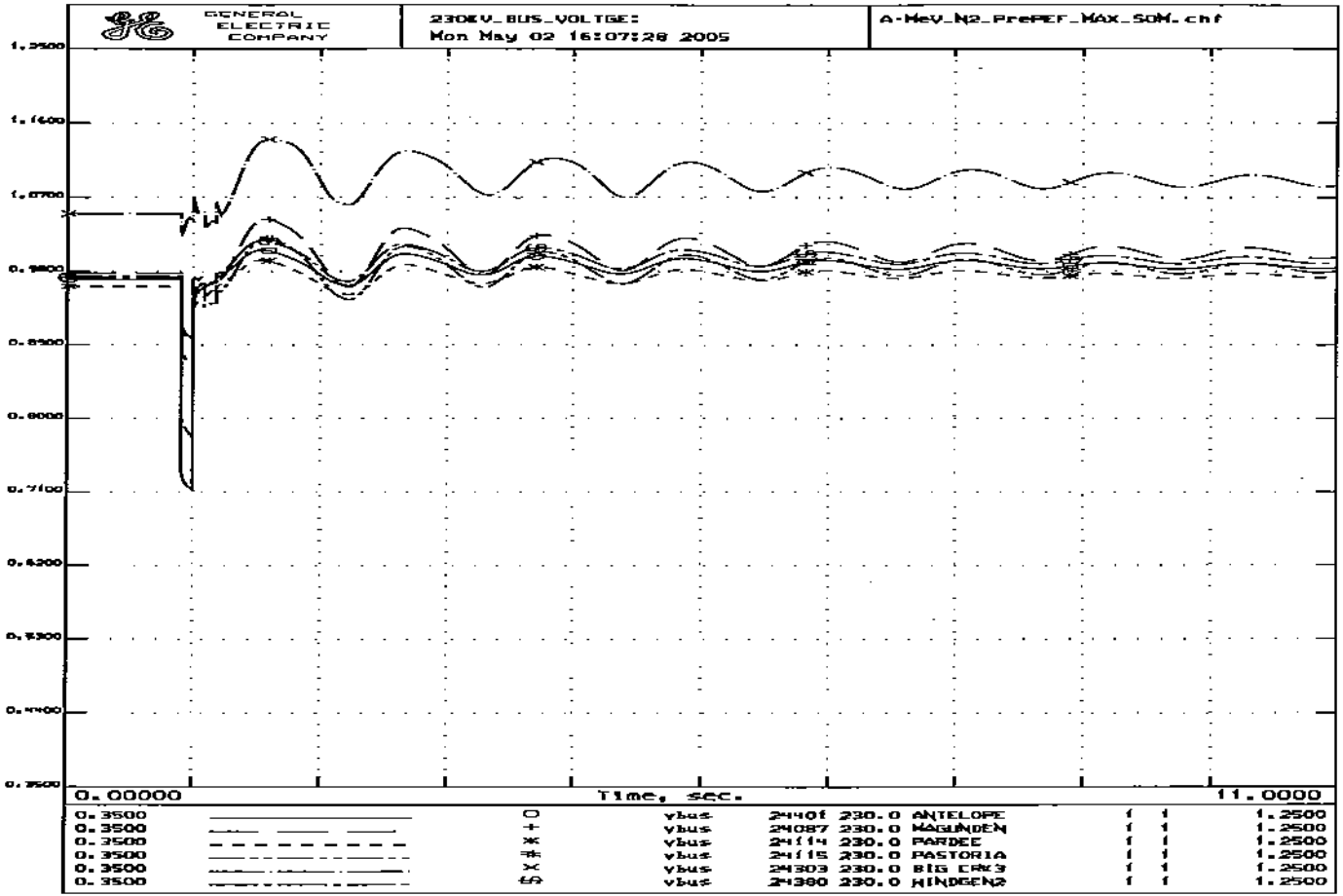
GENERAL ELECTRIC COMPANY
230KV_BUS_VOLTGE:
Mon May 02 16:07:28 2005
A-MeV_N2_PrePEF_MAX_50M.chf
1.2500
1.1600
1.0700
0.9800
0.8900
0.8000
0.7100
0.6200
0.5300
0.4400
0.3500
0.00000
Time, sec.
11.0000
0.3500 O vbus 24401 230.0 ANTELOPE 1 1 1.2500
0.3500 + vbus 24087 230.0 MAGUNDEN 1 1 1.2500
0.3500 * vbus 24114 230.0 PARDEE 1 1 1.2500
0.3500 # vbus 24115 230.0 PASTORIA 1 1 1.2500
0.3500 X vbus 24303 230.0 BIG CRK3 1 1 1.2500
0.3500 vbus 24380 230.0 WINDGEN2 1 1 1.2500

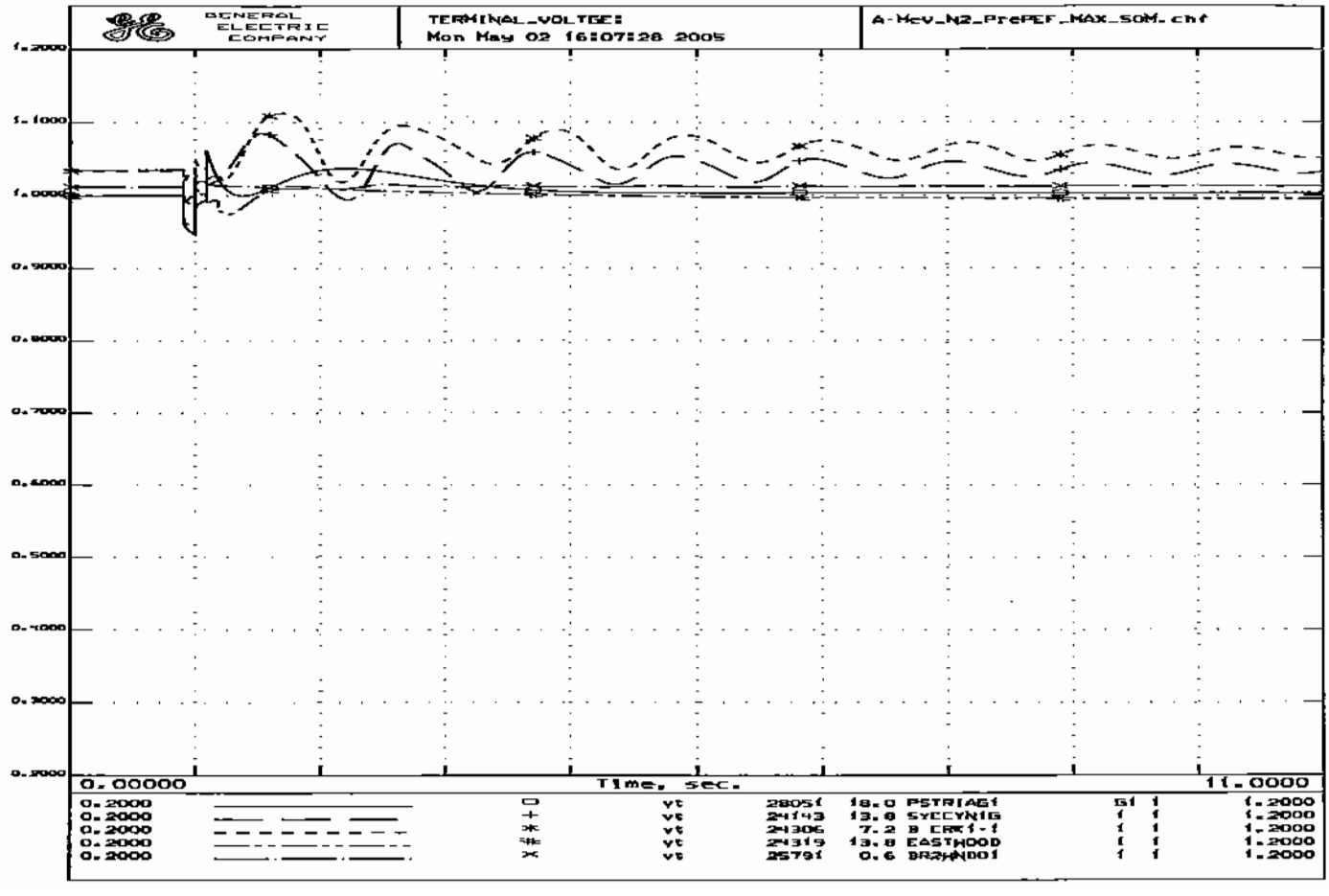
GENERAL ELECTRIC COMPANY
TERMINAL_VOLTGE:
Mon May 02 16:07:28 2005
A-Hcv_N2_PrePEF_MAX_SOM.chf
1.2000
1.1000
1.0000
0.9000
0.8000
0.7000
0.6000
0.5000
0.4000
0.3000
0.2000
0.00000
Time, sec.
11.0000
0.2000 vt 28051 18.0 PSTRIAG1 G1 1 1.2000
0.2000 vt 24143 13.8 SYCCYNIG 1 1 1.2000
0.2000 vt 24306 7.2 B CRK1-1 1 1 1.2000
0.2000 vt 24319 13.8 EASTWOOD 1 1 1.2000
0.2000 vt 25791 0.6 BR2HNDO1 1 1 1.2000

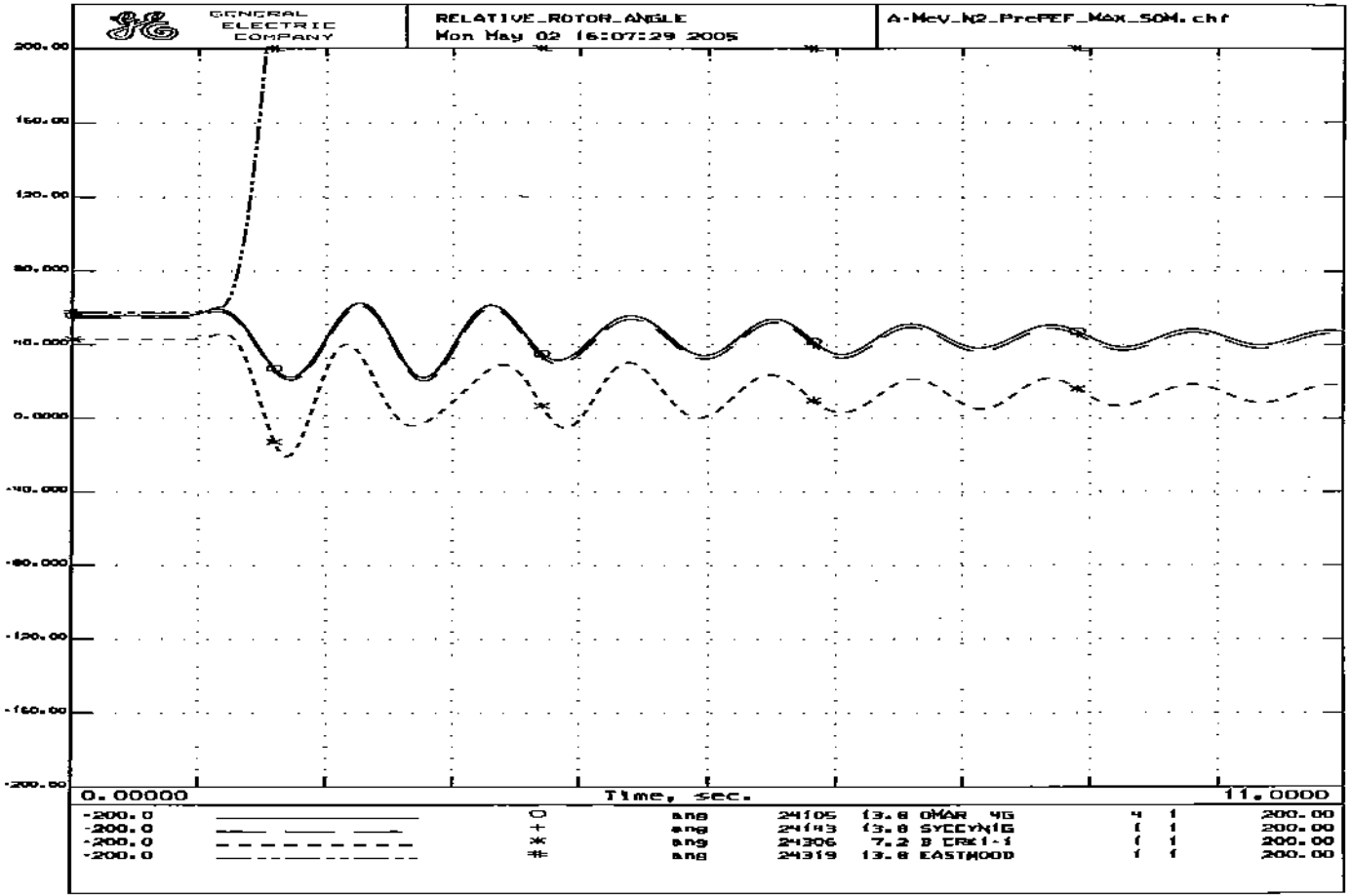
GENERAL ELECTRIC COMPANY
RELATIVE_ROTOR_ANGLE
Mon May 02 16:07:29 2005
A-McV_N2_PrePEF_Max_SOM.chf
200.00
160.00
120.00
80.000
40.000
0.0000
-40.000
-80.000
-120.00
-160.00
-200.00
0.00000
Time, sec.
11.0000
-200.0 ang 24105 13.8 OMAR 4G 4 1 200.00
-200.0 ang 24143 13.8 SYCCYN1G 1 1 200.00
-200.0 ang 24306 7.2 B CR#1-1 1 1 200.00
-200.0 ang 24319 13.8 EASTWOOD 1 1 200.00

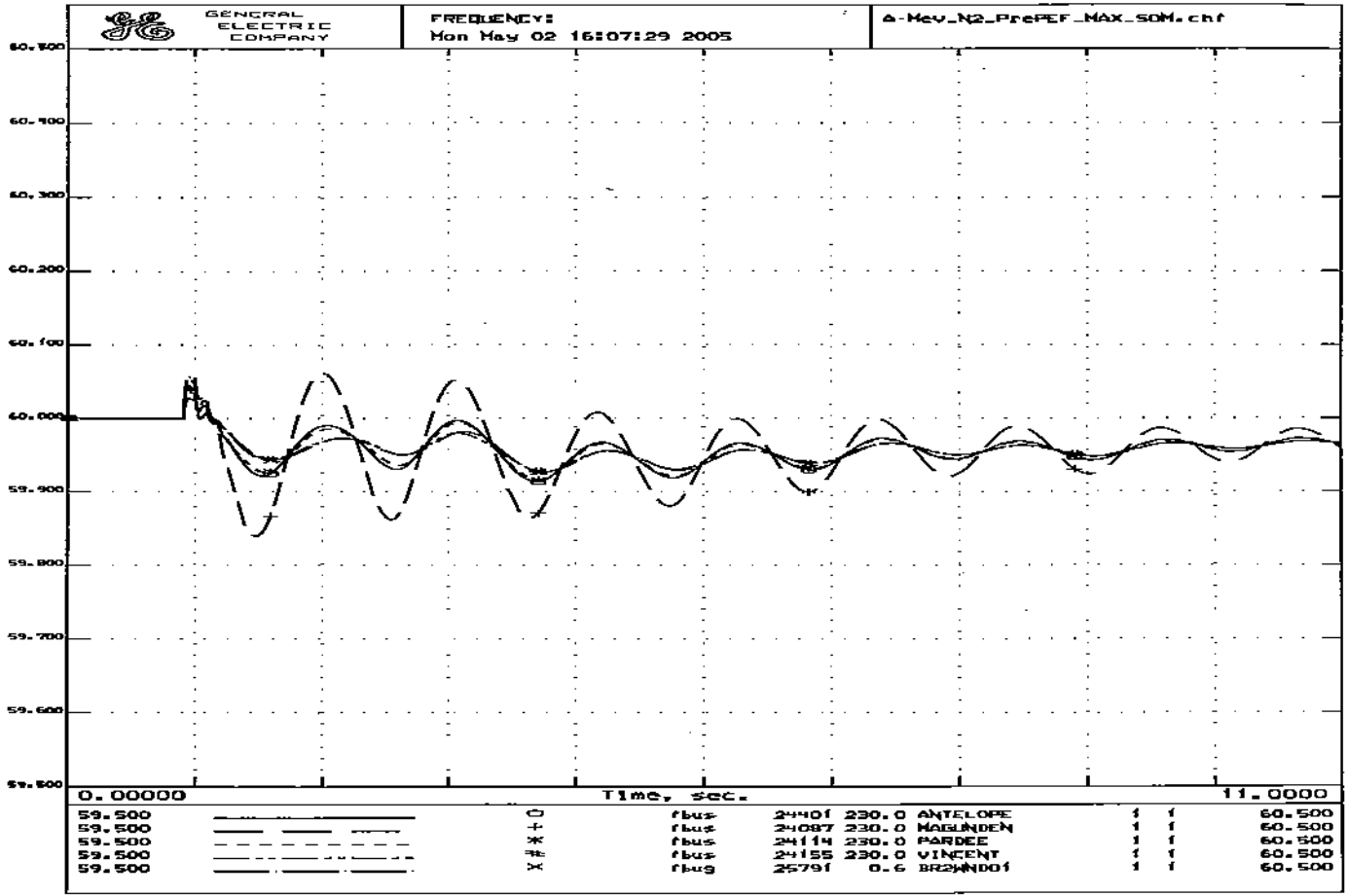
GENERAL ELECTRIC COMPANY
FREQUENCY:
Mon May 02 16:07:29 2005
A-Mev_N2_PrePEF_MAX_SOM.chf
60.500
60.400
60.300
60.200
60.100
60.000
59.900
59.800
59.700
59.600
59.500
0.00000
Time, sec.
11.0000
59.500 ○ fbus 24401 230.0 ANTELOPE 1 1 60.500
59.500 + fbus 24087 230.0 MAGUNDEN 1 1 60.500
59.500 * fbus 24114 230.0 PARDEE 1 1 60.500
59.500 # fbus 24155 230.0 VINCENT 1 1 60.500
59.500 x fbus 25791 0.6 BRAWND01 1 1 60.500

```
PrePEF_MAX_SOM.sav
PrePEF.dyd
TITLE
Calpine Pastoria Addition Stability Study: Loss of Two 230-KV Lines
6-CYCLE 1-Phase Fault at Antelope 230kV Bus
N-2 OUTAGE: Vincent-Antelope No.1 and No.2 230kV Lines
SYSTEM STABILITY CASE - A-V_N2_PrePEF_MAX_SOM.swt
PrePEF_MAX_SOM.sav + PrePEF.dyd + A-V_N3_PrePEF_MAX_SOM.swt
RUN 10.0
CC
CC   ***Calpine Pastoria Addition DYNAMIC STABILITY ASSESSMENT***
CC   APPLY A 1-PHASE-TO-GROUND FAULT ON THE ANTELOPE 230-KV BUS
FB   0.0 "ANTELOPE" 230  0.00204 0.02565
CC
CC   CLEAR FAULT IN 6 CYCLES
CFB  6.0 "ANTELOPE" 230
CC
CC   REMOVE VINCENT-ANTELOPE NO.1 230-KV LINE
DL   6.0 "VINCENT " 230. "ANTELOPE" 230. "1 "
CC
CC   REMOVE VINCENT-ANTELOPE NO.2 230-KV LINE
DL   6.0 "ANTELOPE" 230. "VINCENT " 230. "2 "
CC
CC   IMPLEMENT PEF SPECIAL PROTECTION SCHEME FOR N-2
TG   12.0 "PSTRIAS1" 18.00 "S1"
TG   12.0 "PSTRIAG1" 18.00 "G1"
TG   12.0 "PSTRIAG2" 18.00 "G2"
TG   12.0 "PSTRIAS2" 18.00 "S2"
TG   12.0 "PSTRIAG3" 18.00 "G3"
CC
CC   INITIATE SEL-68 STABILITY TRIP
TG   18.0 "MAMOTH1G" 13.80 "1 "
TG   18.0 "MAMOTH2G" 13.80 "2 "
TG   18.0 "EASTWOOD" 13.80 "1 "
```

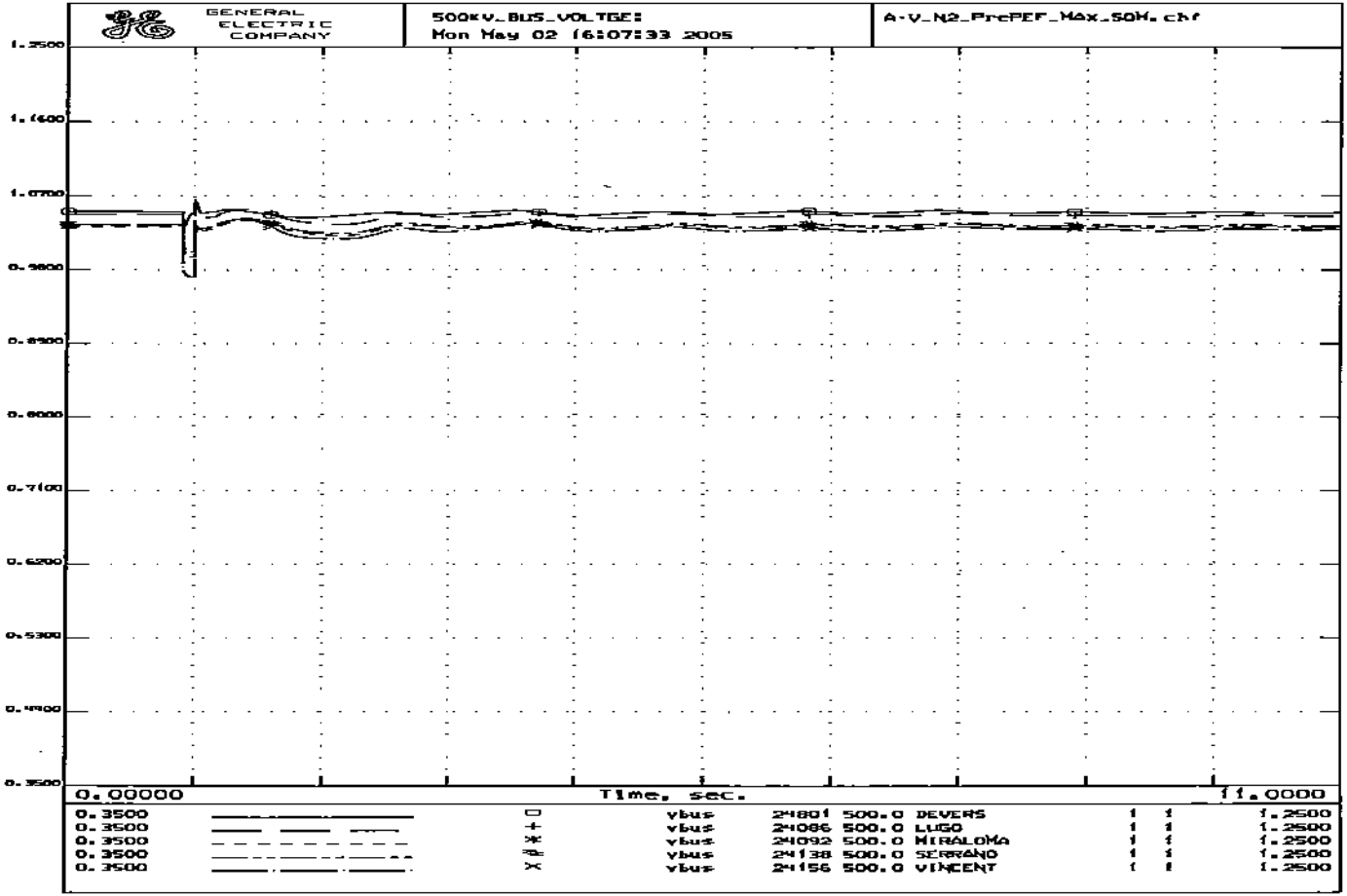
GENERAL ELECTRIC COMPANY
500kV_BUS_VOLTGE:
Mon May 02 16:07:33 2005
A-V_N2_PrePEF_Max_50W.chf
1.2500
1.1600
1.0700
0.9800
0.8900
0.8000
0.7100
0.6200
0.5300
0.4400
0.3500
0.00000
Time, sec.
11.0000
0.3500 □ vbus 24801 500.0 DEVERS 1 1 1.2500
0.3500 + vbus 24086 500.0 LUGO 1 1 1.2500
0.3500 * vbus 24092 500.0 MIRALOMA 1 1 1.2500
0.3500 vbus 24138 500.0 SERRANO 1 1 1.2500
0.3500 × vbus 24156 500.0 VINCENT 1 1 1.2500

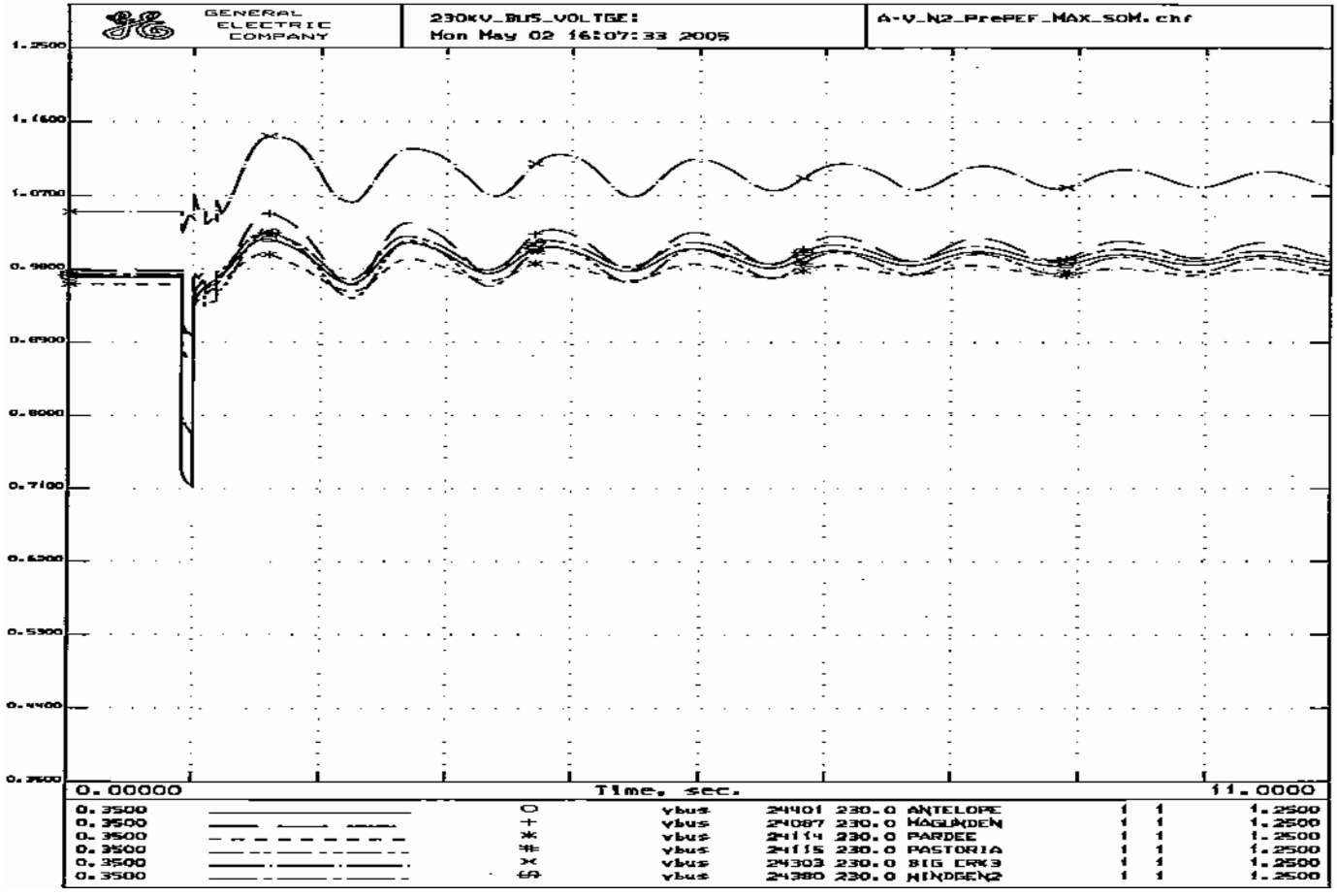
GENERAL ELECTRIC COMPANY
230KV_BUS_VOLTGE:
Mon May 02 16:07:33 2005
A-V_N2_PrePEF_MAX_SOM.chf
1.2500
1.1600
1.0700
0.9800
0.8900
0.8000
0.7100
0.6200
0.5300
0.4400
0.3500
0.00000
Time, sec.
11.0000
0.3500 ○ vbus 24401 230.0 ANTELOPE 1 1 1.2500
0.3500 + vbus 24087 230.0 MAGUNDEN 1 1 1.2500
0.3500 ✱ vbus 24114 230.0 PARDEE 1 1 1.2500
0.3500 # vbus 24115 230.0 PASTORIA 1 1 1.2500
0.3500 × vbus 24303 230.0 BIG CRK3 1 1 1.2500
0.3500 ⊕ vbus 24380 230.0 MINDGEN2 1 1 1.2500

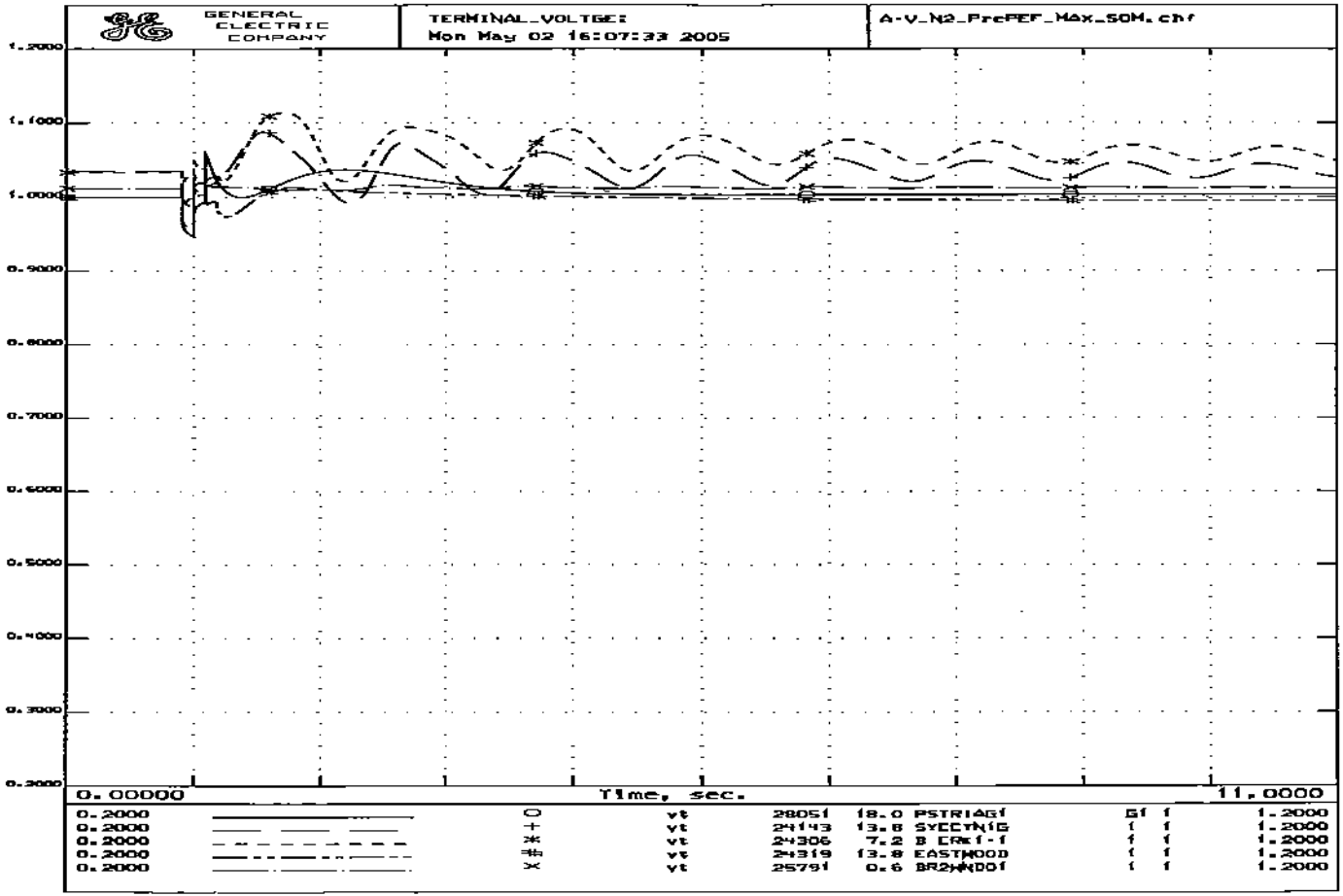
GENERAL ELECTRIC COMPANY
TERMINAL_VOLTGE:
Mon May 02 16:07:33 2005
A-V_N2_PrePEF_Max_SOM.chf
1.2000
1.1000
1.0000
0.9000
0.8000
0.7000
0.6000
0.5000
0.4000
0.3000
0.2000
0.00000
Time, sec.
11.0000
0.2000 ○ vt 28051 18.0 PSTRIAGI 51 1 1.2000
0.2000 + vt 24143 13.8 SYCCTNIG 1 1 1.2000
0.2000 ✳ vt 24306 7.2 B [Rk1-1 1 1 1.2000
0.2000 # vt 24319 13.8 EASTWOOD 1 1 1.2000
0.2000 × vt 25791 0.6 BR2WNDOI 1 1 1.2000

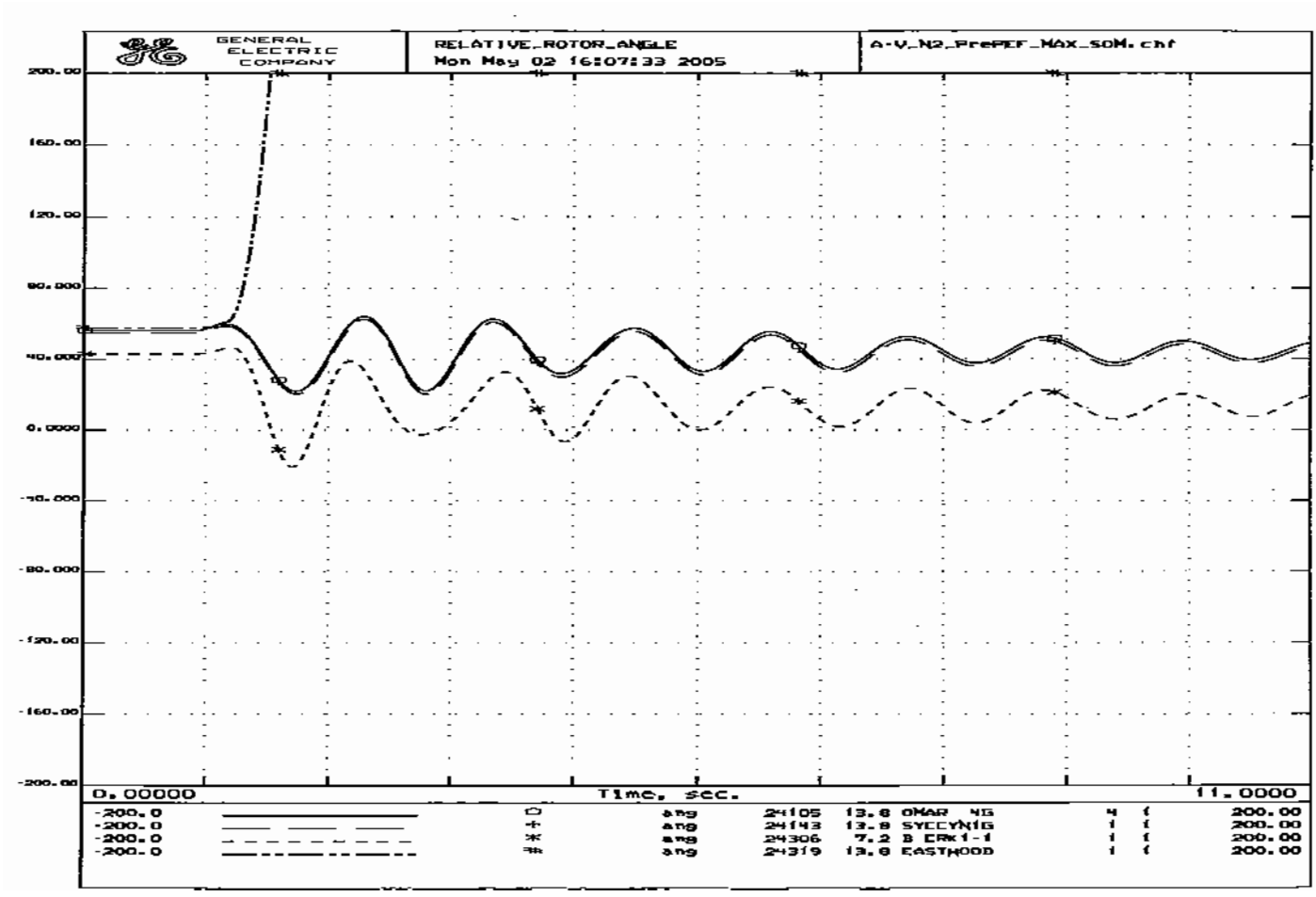
GENERAL ELECTRIC COMPANY
RELATIVE_ROTOR_ANGLE
Mon May 02 16:07:33 2005
A-V_N2_PrePEF_MAX_SOM.chf
200.00
160.00
120.00
80.000
40.000
0.0000
-40.000
-80.000
-120.00
-160.00
-200.00
0.00000
Time, sec.
11.0000
-200.0 ang 24105 13.8 OMAR 4G 4 1 200.00
-200.0 ang 24143 13.8 SYCCYN1G 1 1 200.00
-200.0 ang 24306 7.2 B ERK1-1 1 1 200.00
-200.0 ang 24319 13.8 EASTWOOD 1 1 200.00

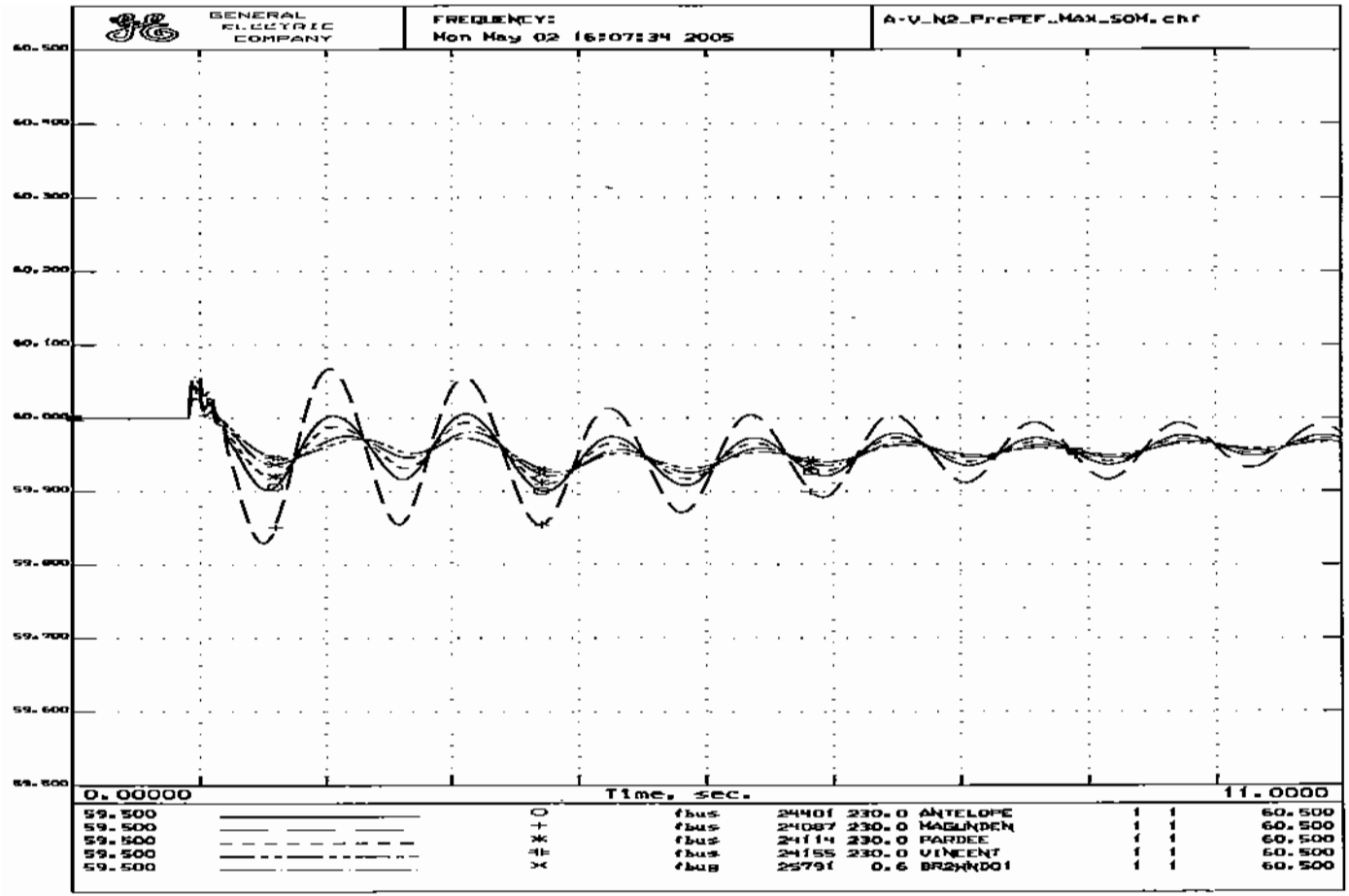
GENERAL ELECTRIC COMPANY
FREQUENCY:
Mon May 02 16:07:34 2005
A-V_N2_PrePEF_MAX_SOM.chf
60.500
60.400
60.300
60.200
60.100
60.000
59.900
59.800
59.700
59.600
59.500
0.00000
Time, sec.
11.0000
59.500 ○ fbus 24401 230.0 ANTELOPE 1 1 60.500
59.500 + fbus 24087 230.0 MAGUNDEN 1 1 60.500
59.500 ✱ fbus 24114 230.0 PARDEE 1 1 60.500
59.500 ✱ fbus 24155 230.0 VINCENT 1 1 60.500
59.500 × fbus 25791 0.6 BR2WNDO1 1 1 60.500

```
PrePEF_MAX_SOM.sav
PrePEF.dyd
TITLE
Calpine Pastoria Addition Stability Study: Loss of Two 230-kV Lines
6-CYCLE 1-Phase Fault at Magunden 230kV Bus
N-2 OUTAGE: Magunden-Antelope & Magunden-Windgen2 230kV Lines
SYSTEM STABILITY CASE - Ma-AW2_N2_PrePEF_MAX_SOM.swt
PrePEF_MAX_SOM.sav + PrePEF.dyd + Ma-AW2_N2_PrePEF_MAX_SOM.swt
RUN 10.0
CC
CC   ***Calpine Pastoria Addition DYNAMIC STABILITY ASSESSMENT***
CC   APPLY A 1-PHASE-TO-GROUND FAULT ON THE MAGUNDEN 230-KV BUS
FB   0.0 "MAGUNDEN" 230  0.00468 0.03859
CC
CC   CLEAR FAULT IN 6 CYCLES
CFB  6.0 "MAGUNDEN" 230
CC
CC   REMOVE MAGUNDEN-ANTELOPE NO.1 230-KV LINE
DL   6.0 "MAGUNDEN" 230. "ANTELOPE" 230. "1 "
CC
CC   REMOVE MAGUNDEN-WINDGEN2 230-KV LINE
DL   6.0 "MAGUNDEN" 230. "WINDGEN2" 230. "1 "
CC
CC   IMPLEMENT PEP SPECIAL PROTECTION SCHEME FOR N-2
TG   12.0 "PSTRIAS1" 18.00 "S1"
TG   12.0 "PSTRIAG1" 18.00 "G1"
TG   13.0 "PSTRIAG2" 18.00 "G2"
TG   12.0 "PSTRIAS2" 18.00 "S2"
TG   12.0 "PSTRIAG3" 18.00 "G3"
CC
CC   INITIATE SEL-68 STABILITY TRIP
TG   18.0 "MAMOTH1G" 13.80 "1 "
TG   18.0 "MAMOTH2G" 13.80 "2 "
TG   18.0 "EASTWOOD" 13.80 "1 "
```

GENERAL ELECTRIC COMPANY

500KV_BUS_VOLTGE:
Mon May 02 16:07:37 2005

Ms-AH2_N2_ArcPEF_MAX_50H.chf

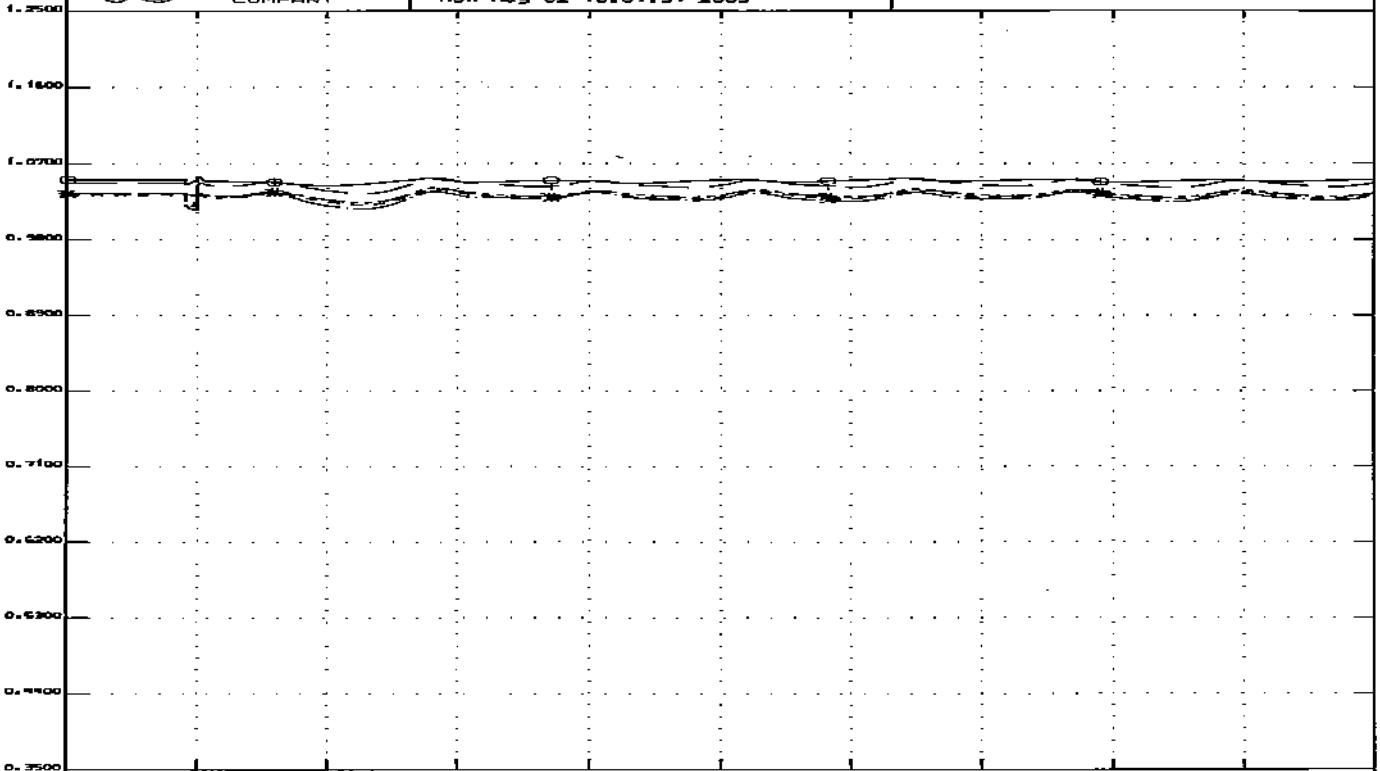

0.3500	○	vbus	24801	500.0	DEVERS	1	1	1.2500
0.3500	+	vbus	24086	500.0	LUGO	1	1	1.2500
0.3500	✳	vbus	24092	500.0	MIRALOMA	1	1	1.2500
0.3500	✳	vbus	24138	500.0	SERRANO	1	1	1.2500
0.3500	×	vbus	24156	500.0	VINCENT	1	1	1.2500

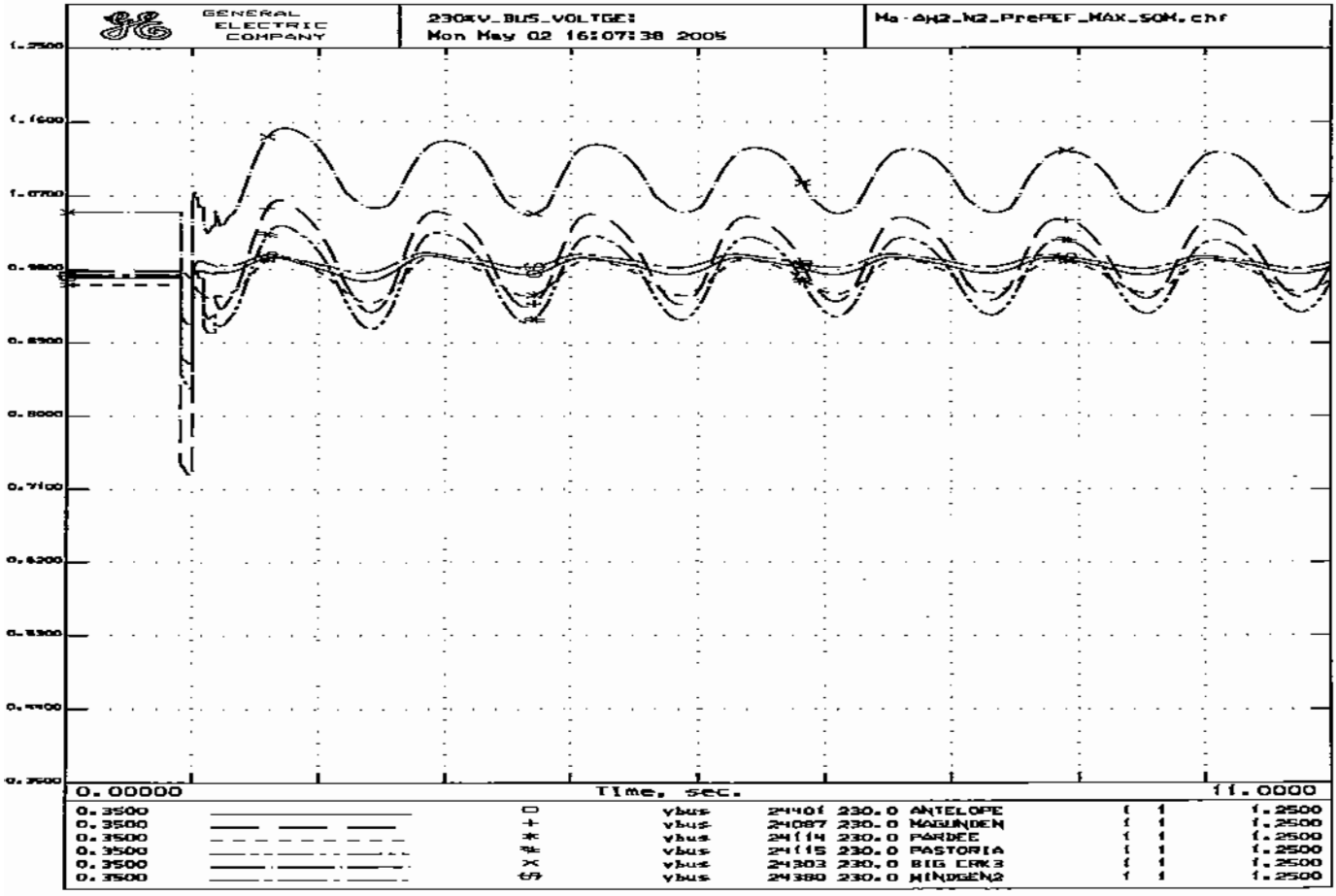
GENERAL ELECTRIC COMPANY
230KV_BUS_VOLTGE:
Mon May 02 16:07:38 2005
Ma-AH2_N2_PrePEF_MAX_SOM.chf
1.2500
1.1600
1.0700
0.9800
0.8900
0.8000
0.7100
0.6200
0.5300
0.4400
0.3500
0.00000
Time, sec.
11.0000
0.3500 vbus 24101 230.0 ANTELOPE 1 1 1.2500
0.3500 vbus 24087 230.0 MAGUNDEN 1 1 1.2500
0.3500 vbus 24114 230.0 PARDEE 1 1 1.2500
0.3500 vbus 24115 230.0 PASTORIA 1 1 1.2500
0.3500 vbus 24303 230.0 BIG CRK3 1 1 1.2500
0.3500 vbus 24380 230.0 MINDGEN2 1 1 1.2500

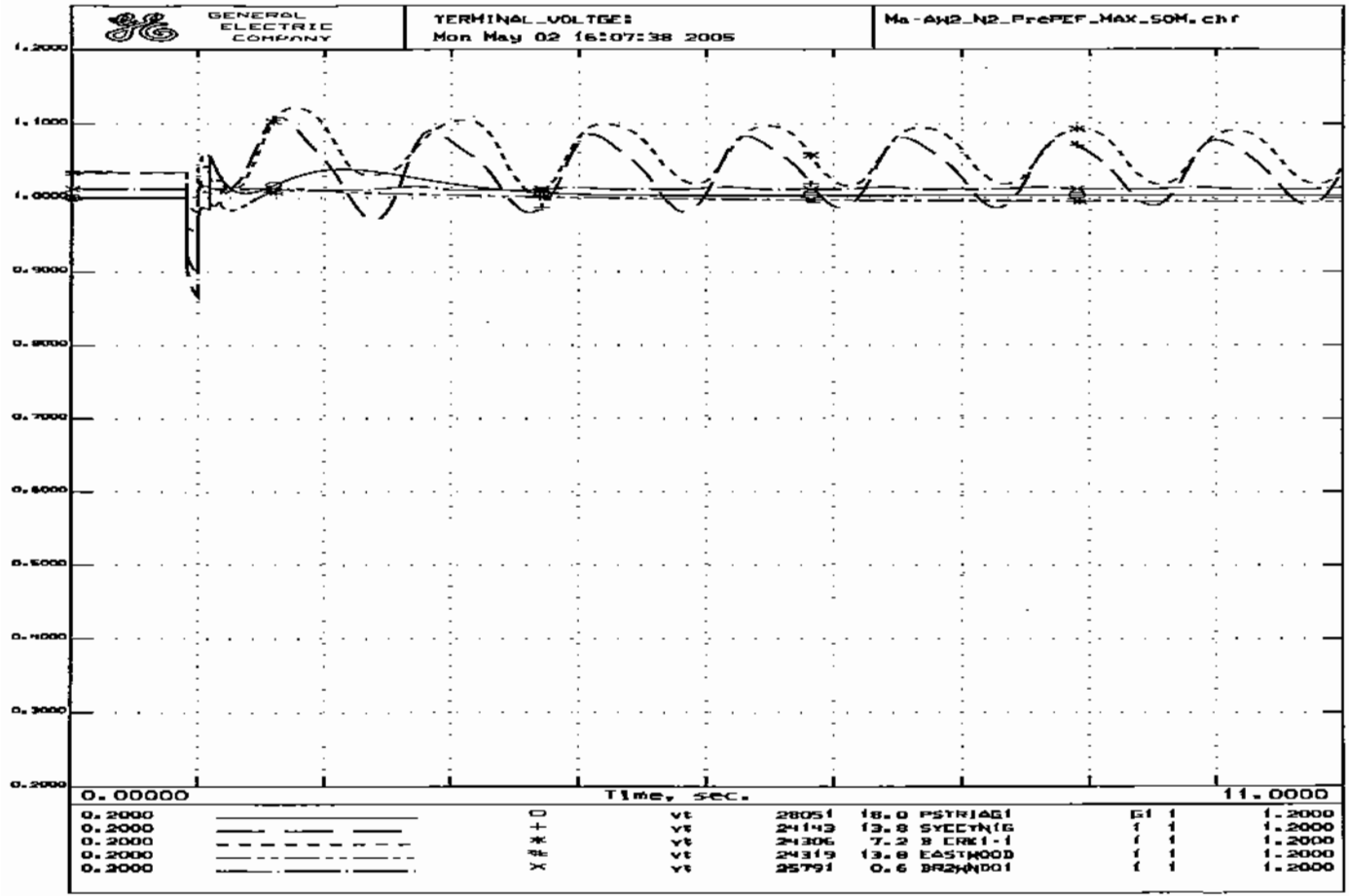
GENERAL ELECTRIC COMPANY
TERMINAL_VOLTGE:
Mon May 02 16:07:38 2005
Ma-AW2_N2_PrePEF_MAX_SOM.chf
1.2000
1.1000
1.0000
0.9000
0.8000
0.7000
0.6000
0.5000
0.4000
0.3000
0.2000
0.00000
Time, sec.
11.0000
0.2000 □ vt 28051 18.0 PSTRIAG1 G1 1 1.2000
0.2000 + vt 24143 13.8 SYECTNIG 1 1 1.2000
0.2000 * vt 24306 7.2 B CRK1-1 1 1 1.2000
0.2000 vt 24319 13.8 EASTWOOD 1 1 1.2000
0.2000 × vt 25791 0.6 BR2WNDO1 1 1 1.2000

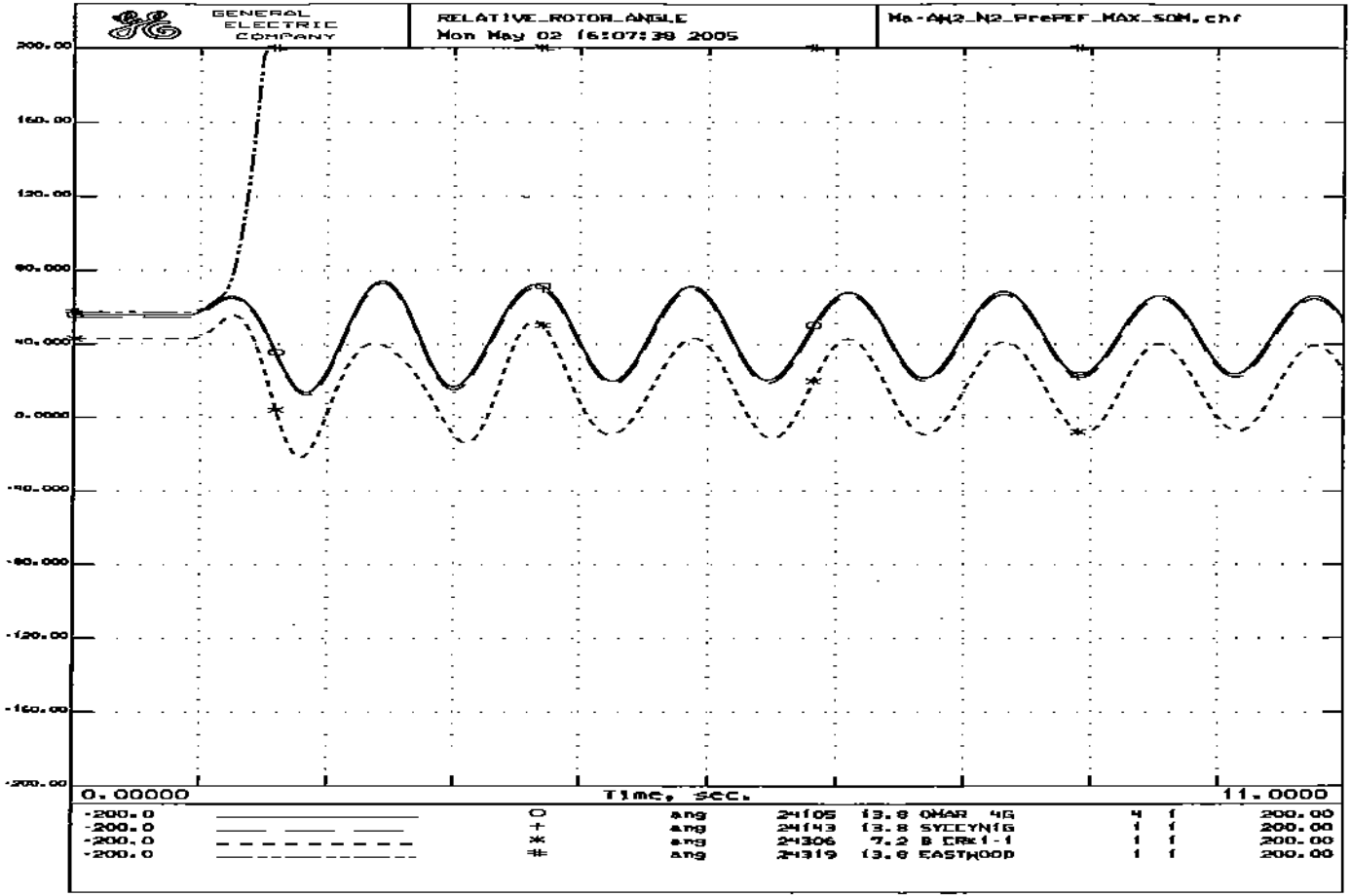
GENERAL ELECTRIC COMPANY
RELATIVE_ROTOR_ANGLE
Mon May 02 16:07:38 2005
Ma-AN2_N2_PrePEF_MAX_SOM.chf
200.00
160.00
120.00
80.000
40.000
0.0000
-40.000
-80.000
-120.00
-160.00
-200.00
0.00000
Time, sec.
11.0000
-200.0 ang 24105 13.8 OMAR 4G 4 1 200.00
-200.0 ang 24143 13.8 SYCCYNIG 1 1 200.00
-200.0 ang 24306 7.2 B CRK1-1 1 1 200.00
-200.0 ang 24319 13.8 EASTWOOD 1 1 200.00

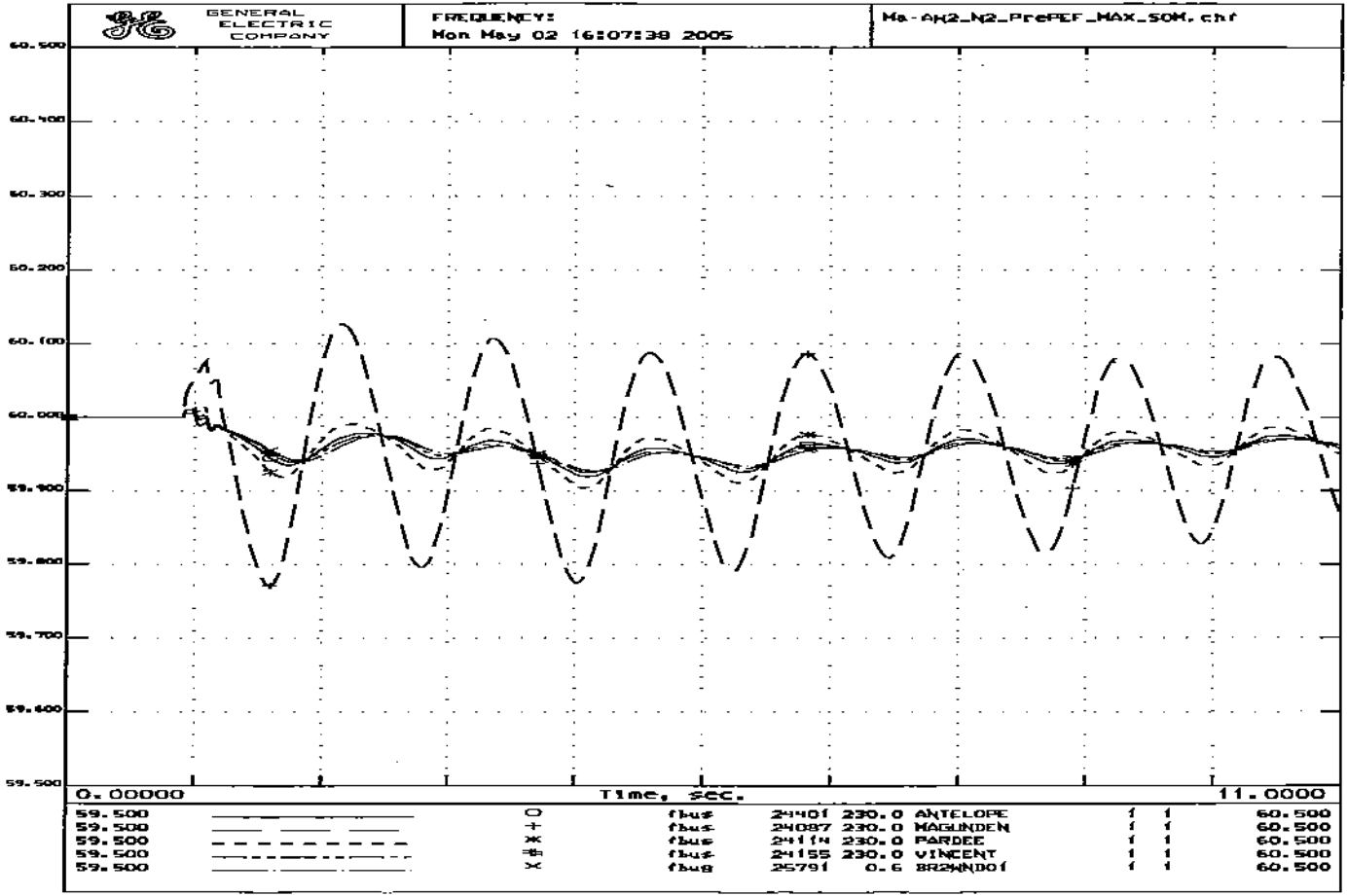
GENERAL ELECTRIC COMPANY
FREQUENCY:
Mon May 02 16:07:38 2005
Ma-AK2_N2_PrePEF_MAX_50M.chf
60.500
60.400
60.300
60.200
60.100
60.000
59.900
59.800
59.700
59.600
59.500
0.00000
Time, sec.
11.0000
59.500 O fbus 24401 230.0 ANTELOPE 1 1 60.500
59.500 + fbus 24087 230.0 MAGUNDEN 1 1 60.500
59.500 * fbus 24114 230.0 PARDEE 1 1 60.500
59.500 # fbus 24155 230.0 VINCENT 1 1 60.500
59.500 X fbus 25791 0.6 BR2WND01 1 1 60.500

```
PrePEF_MAX_SOM.sav
PrePEF.dyd
TITLE
Calpine Pastoria Addition Stability Study: Loss of Two 230-kV Lines
6-CYCLE 1-Phase Fault at Magunden 230kV Bus
N-3 OUTAGE: Magunden-Pastoria No.1 and No.3 230kV Lines
SYSTEM STABILITY CASE - Ma-Pas_N2_PrePEF_MAX_SOM.swt
PrePEF_MAX_SOM.sav + PrePEF.dyd + Ma-Pas_N2_PrePEF_MAX_SOM.swt
RUN 10.0
CC
CC   ***Calpine Pastoria Addition DYNAMIC STABILITY ASSESSMENT***
CC   APPLY A 1-PHASE-TO-GROUND FAULT ON THE MAGUNDEN 230-KV BUS
FB   0.0 "MAGUNDEN" 230  0.00468 0.03859
CC
CC   CLEAR FAULT IN 6 CYCLES
CFB  6.0 "MAGUNDEN" 230
CC
CC   REMOVE MAGUNDEN-ANTELOPE NO.1 230-KV LINE
DL   6.0 "MAGUNDEN" 230. "PASTORIA" 230. "1 "
CC
CC   REMOVE MAGUNDEN-ANTELOPE NO.3 230-KV LINE
DL   6.0 "MAGUNDEN" 230. "PASTORIA" 230. "3 "
CC
CC   INITIATE SEL-68 STABILITY TRIP
TG   18.0 "MAMOTH1G" 13.80 "1 "
TG   18.0 "MAMOTH2G" 13.80 "2 "
TG   18.0 "EASTWOOD" 13.80 "1 "
```

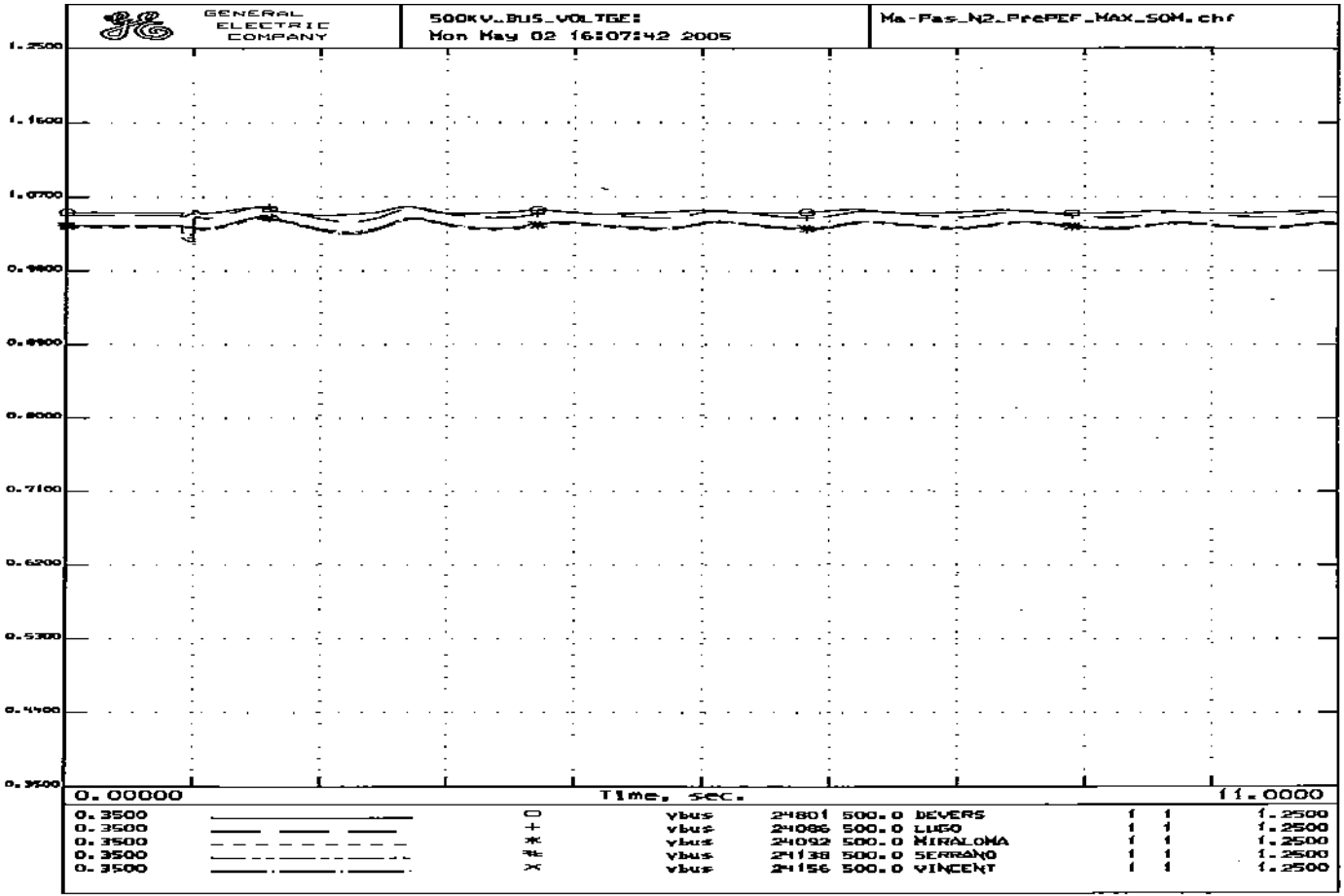
GENERAL ELECTRIC COMPANY
500KV_BUS_VOLTGE:
Mon May 02 16:07:42 2005
Ma-Pas_N2_PrePEF_MAX_SOM.chf
1.2500
1.1600
1.0700
0.9800
0.8900
0.8000
0.7100
0.6200
0.5300
0.4400
0.3500
0.00000
Time, sec.
11.0000
0.3500 ○ vbus 24801 500.0 DEVERS 1 1 1.2500
0.3500 + vbus 24086 500.0 LUGO 1 1 1.2500
0.3500 * vbus 24092 500.0 MIRALOMA 1 1 1.2500
0.3500 * vbus 24138 500.0 SERRANO 1 1 1.2500
0.3500 × vbus 24156 500.0 VINCENT 1 1 1.2500

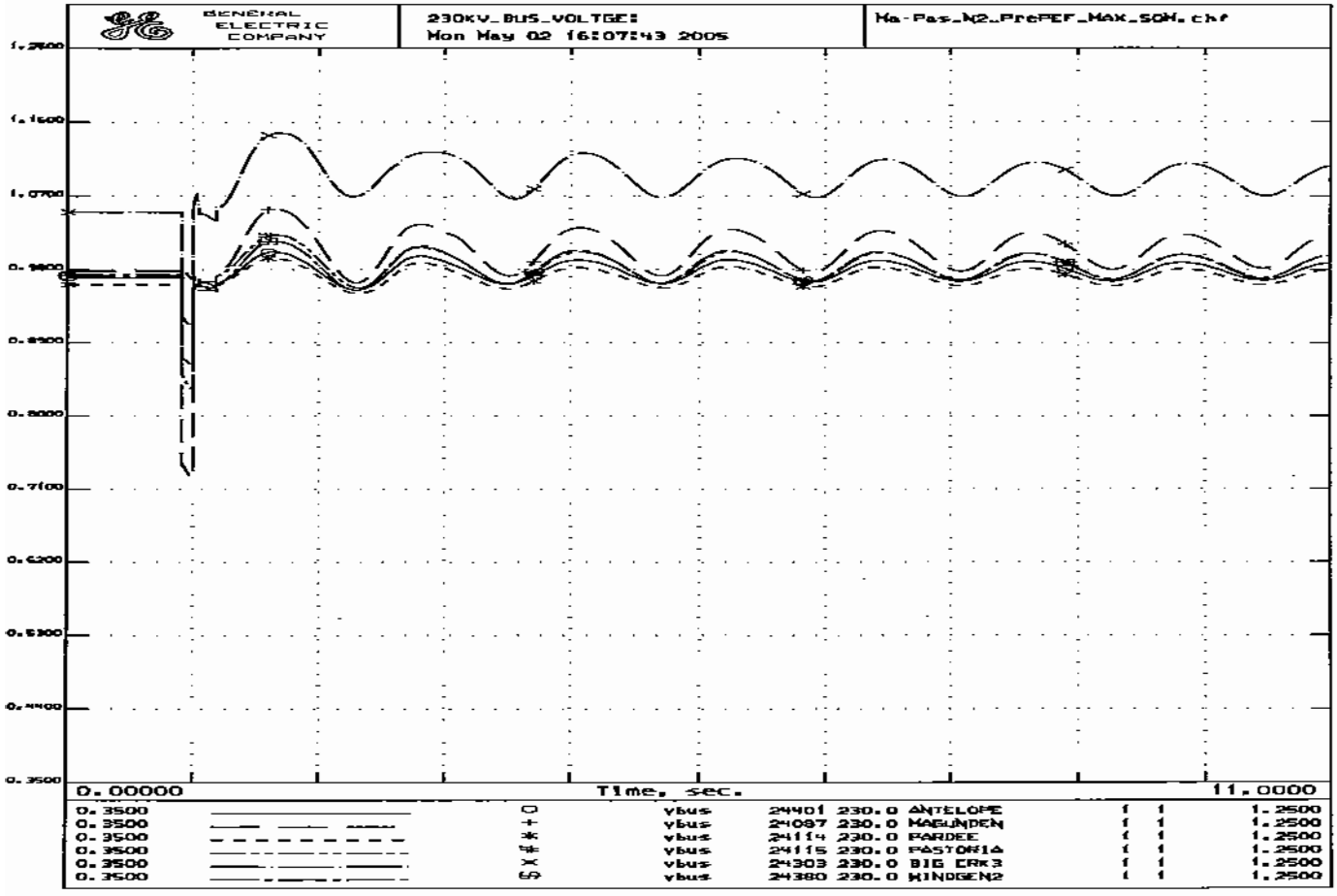
GENERAL ELECTRIC COMPANY
230KV_BUS_VOLTGE:
Mon May 02 16:07:43 2005
Ma-Pas_N2_PrePEF_MAX_SOW.chf
1.2800
1.1600
1.0700
0.9800
0.8900
0.8000
0.7100
0.6200
0.5300
0.4400
0.3500
0.00000
Time, sec.
11.0000
0.3500 ○ vbus 24401 230.0 ANTELOPE 1 1 1.2500
0.3500 + vbus 24087 230.0 MABUNDEN 1 1 1.2500
0.3500 * vbus 24114 230.0 PARDEE 1 1 1.2500
0.3500 # vbus 24115 230.0 PASTORIA 1 1 1.2500
0.3500 X vbus 24303 230.0 BIG CRK3 1 1 1.2500
0.3500 vbus 24380 230.0 WINDGEN2

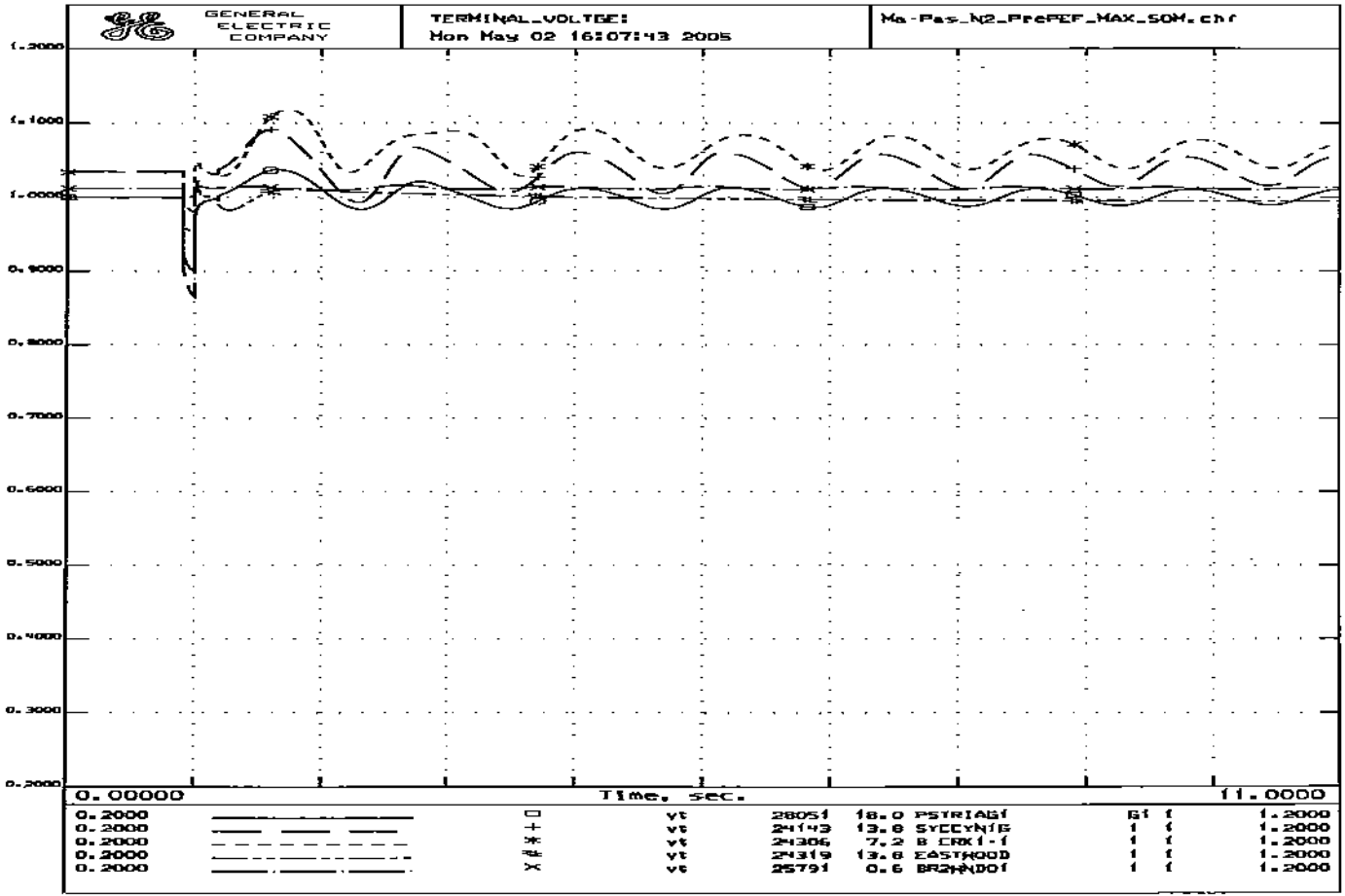
GENERAL ELECTRIC COMPANY
TERMINAL_VOLTGE:
Mon May 02 16:07:43 2005
Ma-Pas_N2_PreREF_MAX_50M.chf
1.2000
1.1000
1.0000
0.9000
0.8000
0.7000
0.6000
0.5000
0.4000
0.3000
0.2000
0.00000
Time, sec.
11.0000
0.2000 □ vt 28051 18.0 PSTRIAG1 G1 1 1.2000
0.2000 + vt 24143 13.8 SYCCYN1G 1 1 1.2000
0.2000 * vt 24306 7.2 B CRK1-1 1 1 1.2000
0.2000 vt 24319 13.8 EASTWOOD 1 1 1.2000
0.2000 × vt 25791 0.6 BR2WNDO1 1 1 1.2000

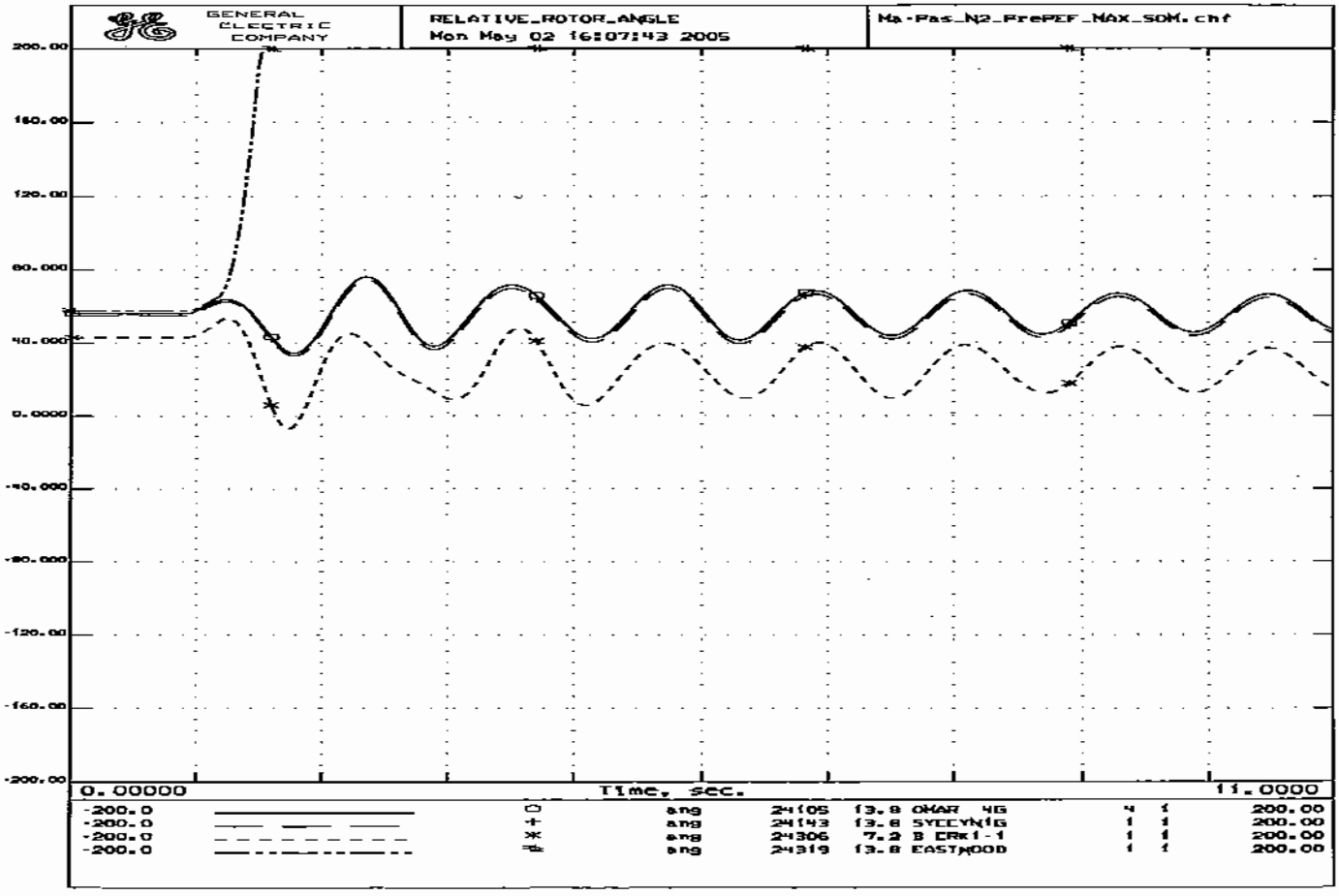
GENERAL ELECTRIC COMPANY
RELATIVE_ROTOR_ANGLE
Mon May 02 16:07:43 2005
Ma-Fas_N2_PrePEF_MAX_SOM.chf
200.00
160.00
120.00
80.000
40.000
0.0000
-40.000
-80.000
-120.00
-160.00
-200.00
0.00000
Time, sec.
11.0000
-200.0 ang 24105 13.8 OMAR 4G 4 1 200.00
-200.0 + ang 24143 13.8 SYCCYN1G 1 1 200.00
-200.0 * ang 24306 7.2 B ERK1-1 1 1 200.00
-200.0 # ang 24319 13.8 EASTWOOD 1 1 200.00

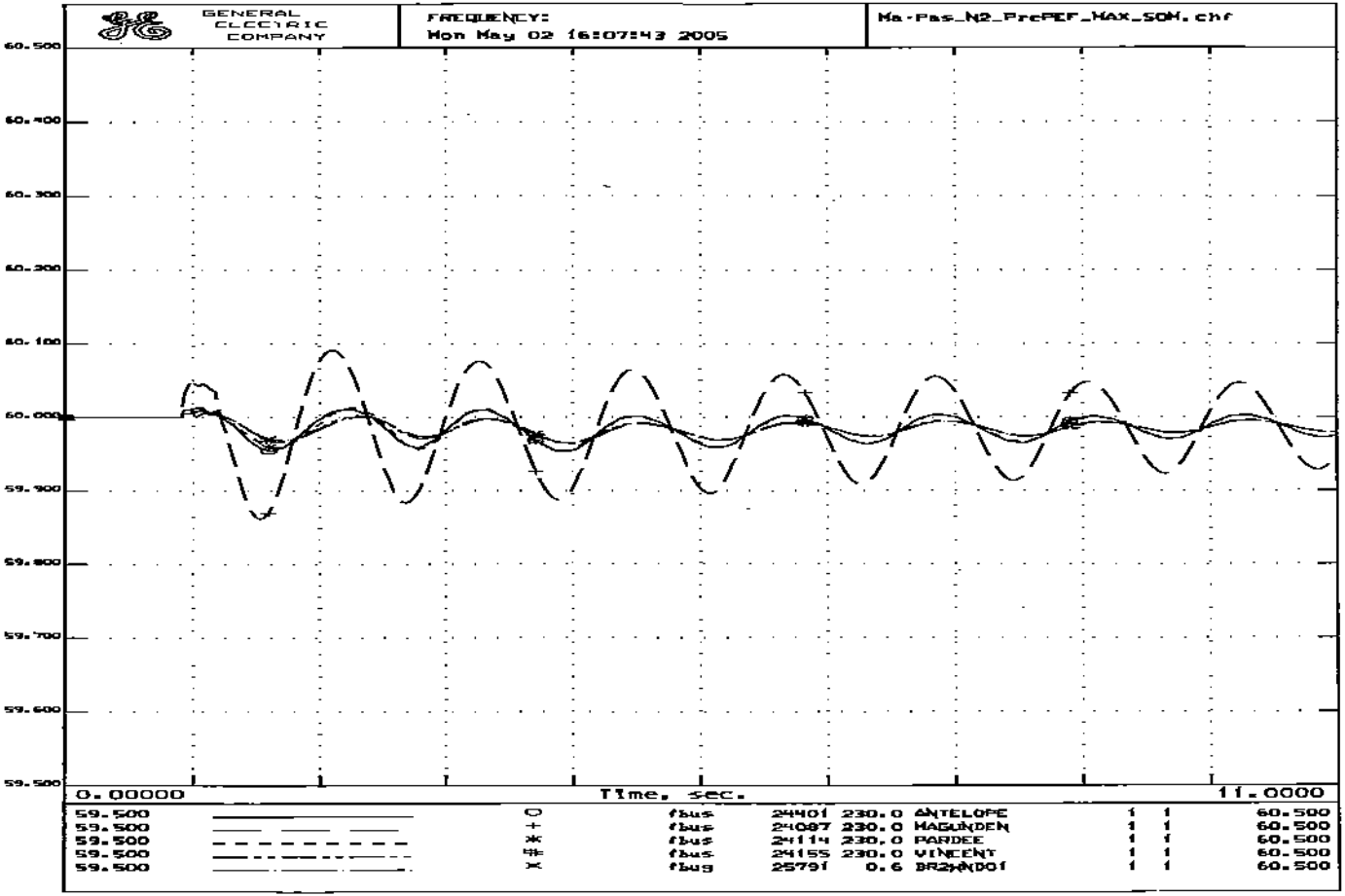
GENERAL ELECTRIC COMPANY
FREQUENCY:
Mon May 02 16:07:43 2005
Ma-Pas_N2_PrePEF_MAX_SOM.chf
60.500
60.400
60.300
60.200
60.100
60.000
59.900
59.800
59.700
59.600
59.500
0.00000
Time, sec.
11.0000
59.500 O fbus 24401 230.0 ANTELOPE 1 1 60.500
59.500 + fbus 24087 230.0 MAGUNDEN 1 1 60.500
59.500 * fbus 24114 230.0 PARDEE 1 1 60.500
59.500 # fbus 24155 230.0 VINCENT 1 1 60.500
59.500 X fbus 25791 0.6 BR2WND01 1 1 60.500

```
PrePEF_MAX_SOM.sav
PrePEF.dyd
TITLE
Calpine Pastoria Addition Stability Study: Loss of Two 230-kV Lines
6-CYCLE 1-Phase Fault at Pastoria 230kV Bus
N-2 OUTAGE: Bailey-Pastoria and Pardee-Pastoria 230kV Lines
SYSTEM STABILITY CASE -. Pas-BPar_N2_PrePEF_MAX_SOM.swt
PrePEF_MAX_SOM.sav + PrePEP.dyd + Pas-BPar_N2_PrePEF_MAX_SOM.swt
RUN 10.0
CC
CC   ***Calpine Pastoria Addition DYNAMIC STABILITY ASSESSMENT***
CC   APPLY A 1-PHASE-TO-GROUND FAULT ON THE PASTORIA 230-KV BUS
FB   0.0 "PASTORIA" 230  0.00172 0.02058
CC
CC   CLEAR FAULT IN 6 CYCLES
CFB  6.0 "PASTORIA" 230
CC
CC   REMOVE BAILEY-PASTORIA 230-KV LINE
DL   6.0 "BAILEY  " 230. "PASTORIA" 230. "1 "
CC
CC   REMOVE PARDEE-PASTORIA 230-KV LINE
DL   6.0 "PARDEE  " 230. "PASTORIA" 230. "1 "
CC
CC   IMPLEMENT PEF SPECIAL PROTECTION SCHEME FOR N-2
TG   12.0 "PSTRIAS1" 18.00 "S1"
TG   12.0 "PSTRIAG1" 18.00 "G1"
TG   12.0 "PSTRIAG2" 18.00 "G2"
TG   12.0 "PSTRIAS2" 18.00 "S2"
TG   12.0 "PSTRIAG3" 18.00 "G3"
CC
CC   INITIATE SEL-68 STABILITY TRIP
TG   18.0 "MAMOTH1G" 13.80 "1 "
TG   18.0 "MAMOTH2G" 13.80 "2 "
TG   18.0 "EASTWOOD" 13.80 "1 "
```

GENERAL ELECTRIC COMPANY

500KV_BUS_VOLTGE:
Mon May 02 16:08:04 2005

Pas-BPar_N2_PrePEF_MAX_SOM.chf

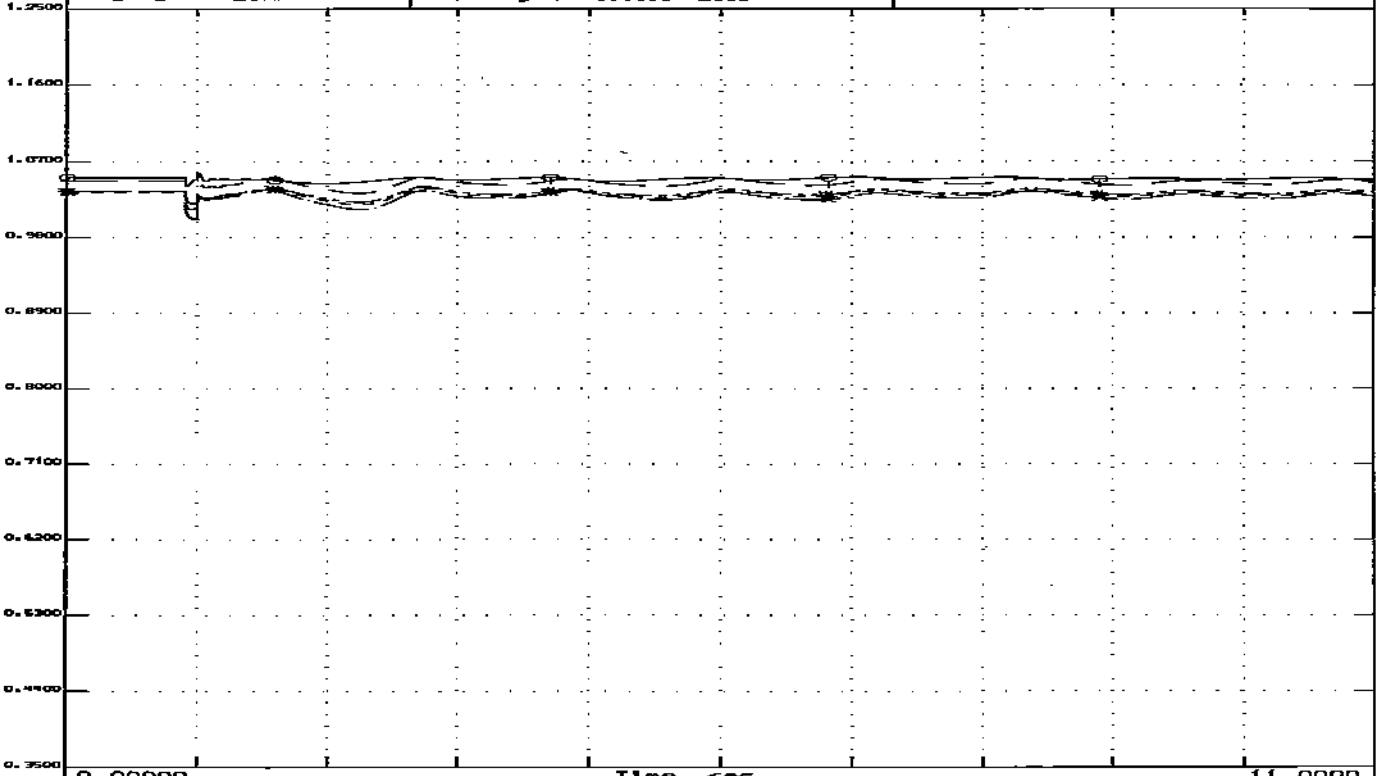

0.3500		O	vbus	24801	500.0	DEVERS	1	1	1.2500
0.3500		+	vbus	24086	500.0	LUGO	1	1	1.2500
0.3500		*	vbus	24092	500.0	MIRALOMA	1	1	1.2500
0.3500		#	vbus	24138	500.0	SERRANO	1	1	1.2500
0.3500		X	vbus	24156	500.0	VINCENT	1	1	1.2500

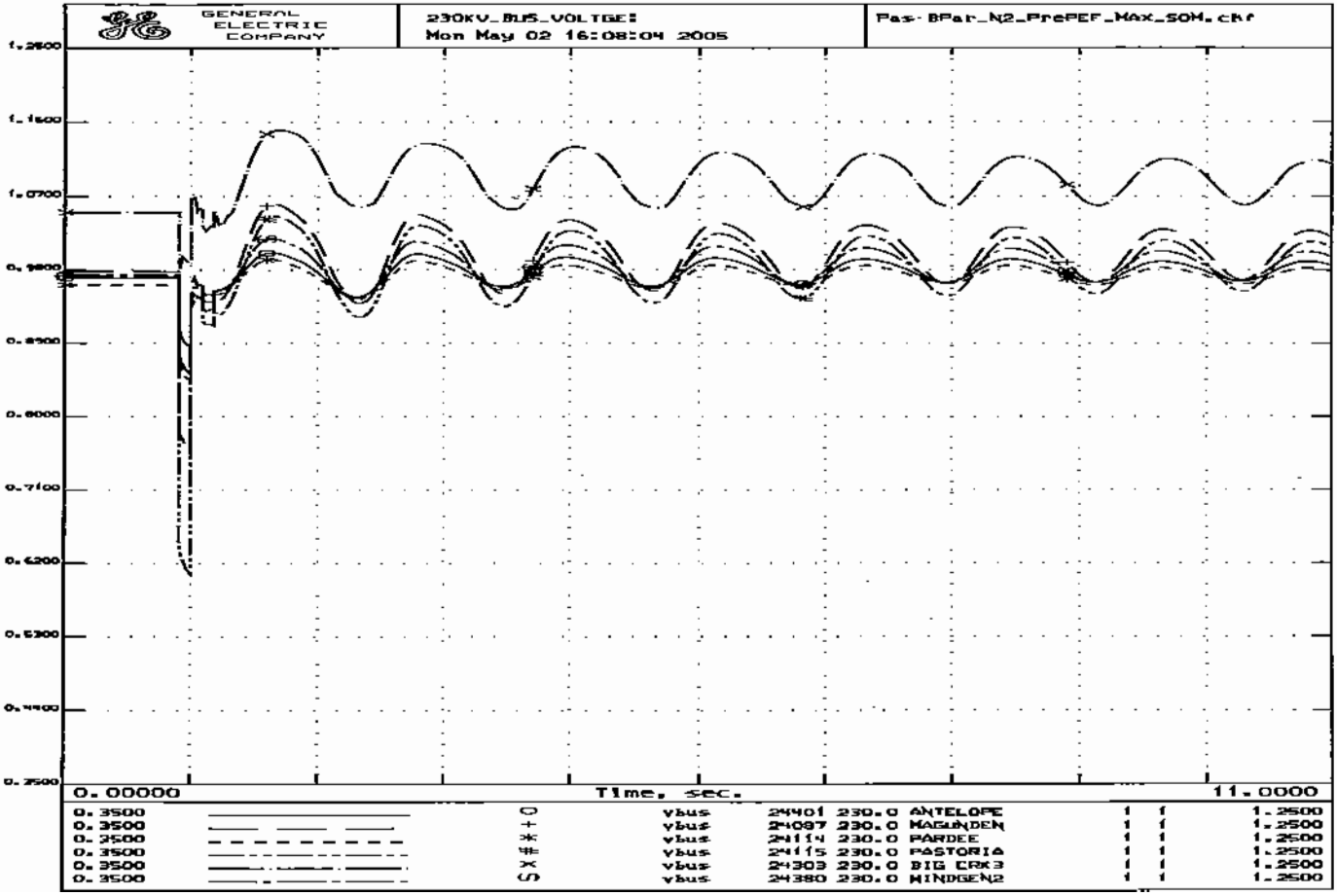
GENERAL ELECTRIC COMPANY
230KV_BUS_VOLTGE:
Mon May 02 16:08:04 2005
Pas-BPar_N2_PrePEF_MAX_SOM.ckf
1.2800
1.1600
1.0700
0.9800
0.8900
0.8000
0.7100
0.6200
0.5300
0.4400
0.2500
0.00000
Time, sec.
11.0000
0.3500 ○ vbus 24401 230.0 ANTELOPE 1 1 1.2500
0.3500 + vbus 24087 230.0 MAGUNDEN 1 1 1.2500
0.3500 * vbus 24114 230.0 PARDEE 1 1 1.2500
0.3500 # vbus 24115 230.0 PASTORIA 1 1 1.2500
0.3500 × vbus 24303 230.0 BIG CRK3 1 1 1.2500
0.3500 ∩ vbus 24380 230.0 WINDGEN2 1 1 1.2500

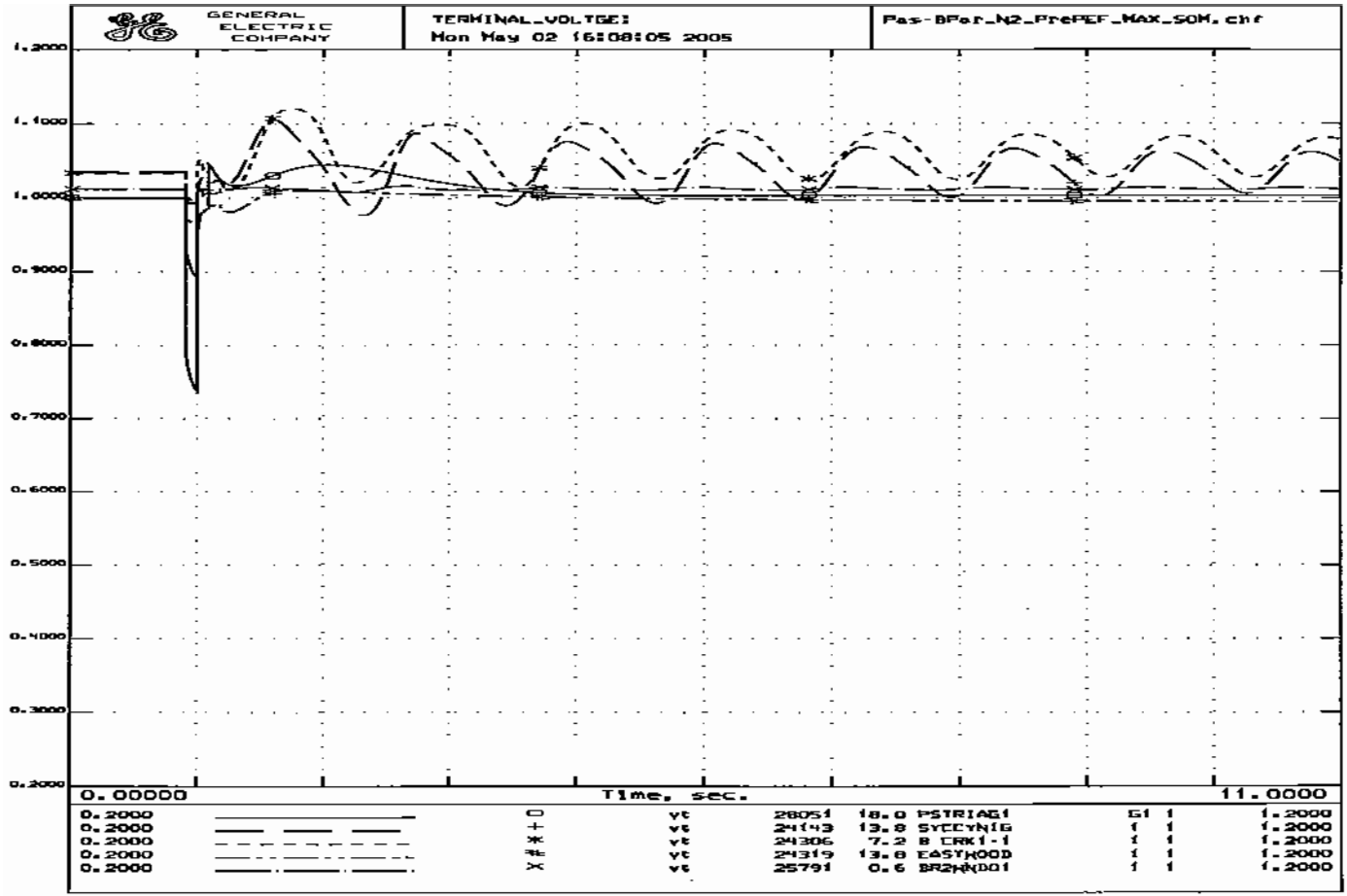
GENERAL ELECTRIC COMPANY
TERMINAL_VOLTGE:
Mon May 02 16:08:05 2005
Pas-BPar_N2_PrePEF_MAX_SOM.chf
1.2000
1.1000
1.0000
0.9000
0.8000
0.7000
0.6000
0.5000
0.4000
0.3000
0.2000
0.00000
Time, sec.
11.0000
0.2000 □ vt 28051 18.0 PSTRIAG1 G1 1 1.2000
0.2000 + vt 24143 13.8 SYCCYNIG 1 1 1.2000
0.2000 * vt 24306 7.2 B CRK1-1 1 1 1.2000
0.2000 # vt 24319 13.8 EASTWOOD 1 1 1.2000
0.2000 X vt 25791 0.6 BR2WNDO1 1 1 1.2000

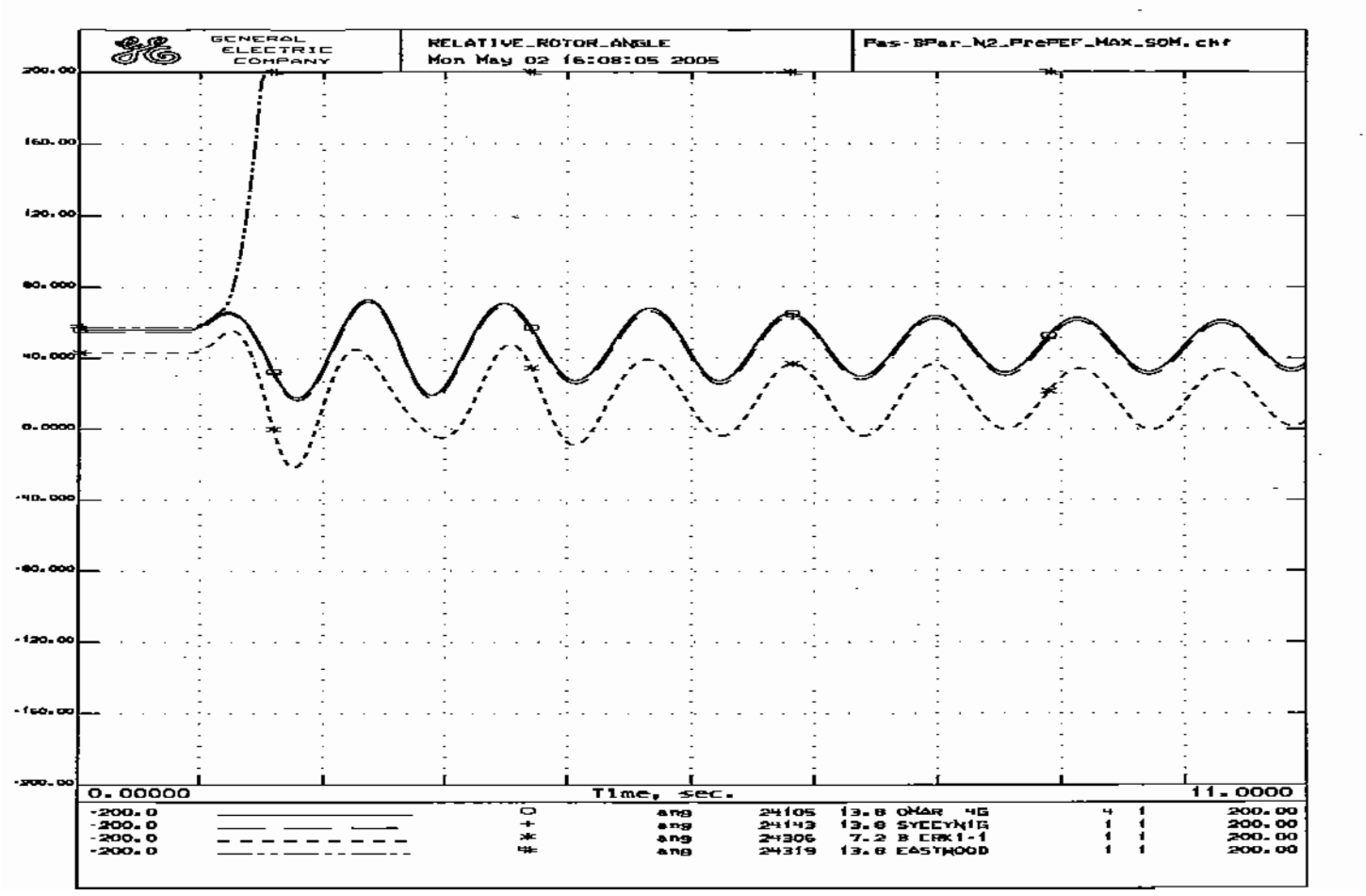
GENERAL ELECTRIC COMPANY
RELATIVE_ROTOR_ANGLE
Mon May 02 16:08:05 2005
Fas-BPar_N2_PrePEF_MAX_SOM.chf
200.00
160.00
120.00
80.000
40.000
0.0000
-40.000
-80.000
-120.00
-160.00
-200.00
0.00000
Time, sec.
11.0000
-200.0 ang 24105 13.8 OMAR 4G 4 1 200.00
-200.0 ang 24143 13.8 SYCEYNIG 1 1 200.00
-200.0 ang 24306 7.2 B ERK1-1 1 1 200.00
-200.0 ang 24319 13.8 EASTWOOD 1 1 200.00

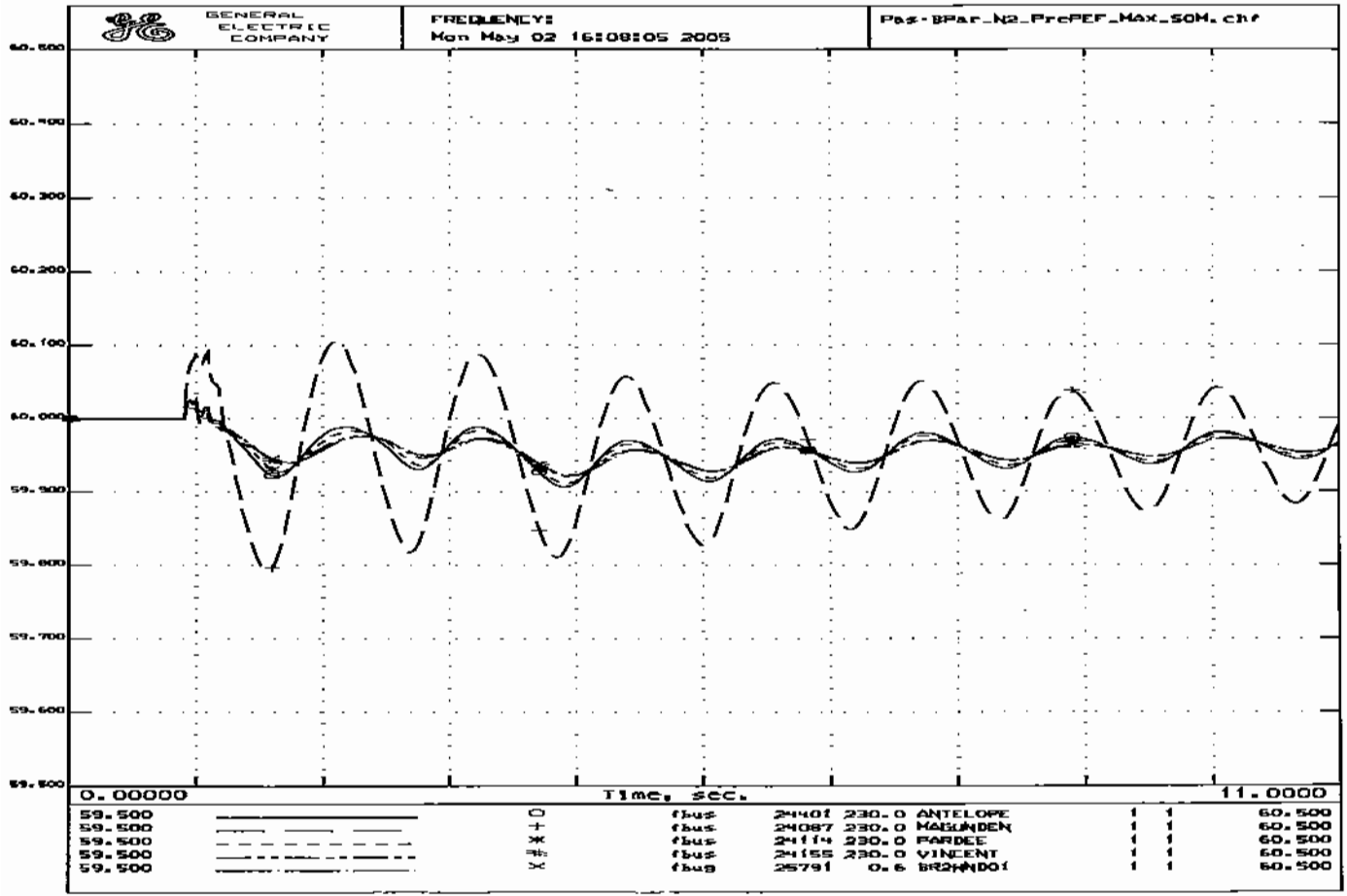
GENERAL ELECTRIC COMPANY
FREQUENCY:
Mon May 02 16:08:05 2005
Pas-BPar_N2_PrcPEF_Max_SOM.chf
60.500
60.400
60.300
60.200
60.100
60.000
59.900
59.800
59.700
59.600
59.500
0.00000
Time, sec.
11.0000
59.500 ○ fbus 24401 230.0 ANTELOPE 1 1 60.500
59.500 + fbus 24087 230.0 MASUNDEN 1 1 60.500
59.500 ✱ fbus 24114 230.0 PARDEE 1 1 60.500
59.500 ✱ fbus 24155 230.0 VINCENT 1 1 60.500
59.500 × fbus 25791 0.6 BR2HNDO1 1 1 60.500

```
PrePEF_MAX_SOM.sav
PrePEF.dyd
TITLE
Calpine Pastoria Addition Stability Study: Loss of Two 230-kV Lines
6-CYCLE 1-Phase Fault at Pastoria 230kV Bus
N-3 OUTAGE: Magunden-Pastoria No.1 and No.3 230kV Line
SYSTEM STABILITY CASE - Pas-Ma_N2_PrePEF_MAX_SOM.swt
PrePEF_MAX_SOM.sav + PrePEF.dyd + Pas-Ma_N2_PrePEF_MAX_SOM.swt
RUN 10.0
CC
CC   ***Calpine Pastoria Addition DYNAMIC STABILITY ASSESSMENT***
CC   APPLY A 1-PHASE-TO-GROUND FAULT ON THE PASTORIA 230-KV BUS
FB   0.0 "PASTORIA" 230  0.00172 0.02058
CC
CC   CLEAR FAULT IN 6 CYCLES
CFB  6.0 "PASTORIA" 230
CC
CC   REMOVE MAGUNDAN-ANTELOPE NO.1 230-KV LINE
DL   6.0 "MAGUNDEN" 230. "PASTORIA" 230. "1 "
CC
CC   REMOVE MAGUNDEN-ANTELOPE NO.3 230-KV LINE
DL   6.0 "MAGUNDEN" 230. "PASTORIA" 230. "3 "
CC
CC   INITIATE SEL-68 STABILITY TRIP
TG   18.0 "MAMOTH1G" 13.80 "1 "
TG   18.0 "MAMOTH2G" 13.80 "2 "
TG   18.0 "EASTWOOD" 13.80 "1 "
```

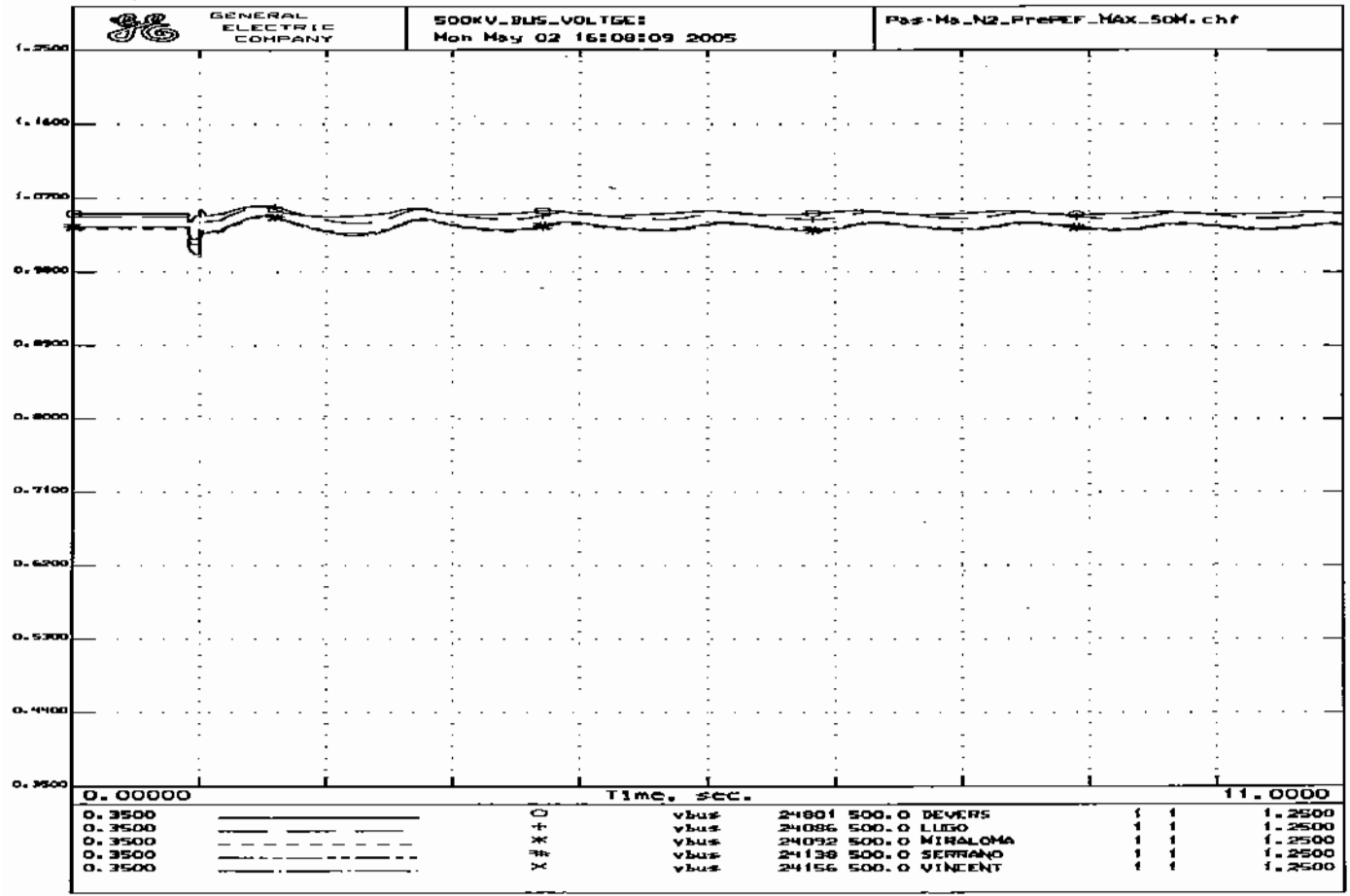
GENERAL ELECTRIC COMPANY
500KV_BUS_VOLTGE:
Mon May 02 16:08:09 2005
Pas-Ma_N2_PrePEF_MAX_50M.chf
1.2500
1.1600
1.0700
0.9800
0.8900
0.8000
0.7100
0.6200
0.5300
0.4400
0.3500
0.00000
Time, sec.
11.0000
0.3500 O vbus 24801 500.0 DEVERS 1 1 1.2500
0.3500 + vbus 24086 500.0 LUGO 1 1 1.2500
0.3500 * vbus 24092 500.0 MIRALOMA 1 1 1.2500
0.3500 # vbus 24138 500.0 SERRANO 1 1 1.2500
0.3500 X vbus 24156 500.0 VINCENT 1 1 1.2500

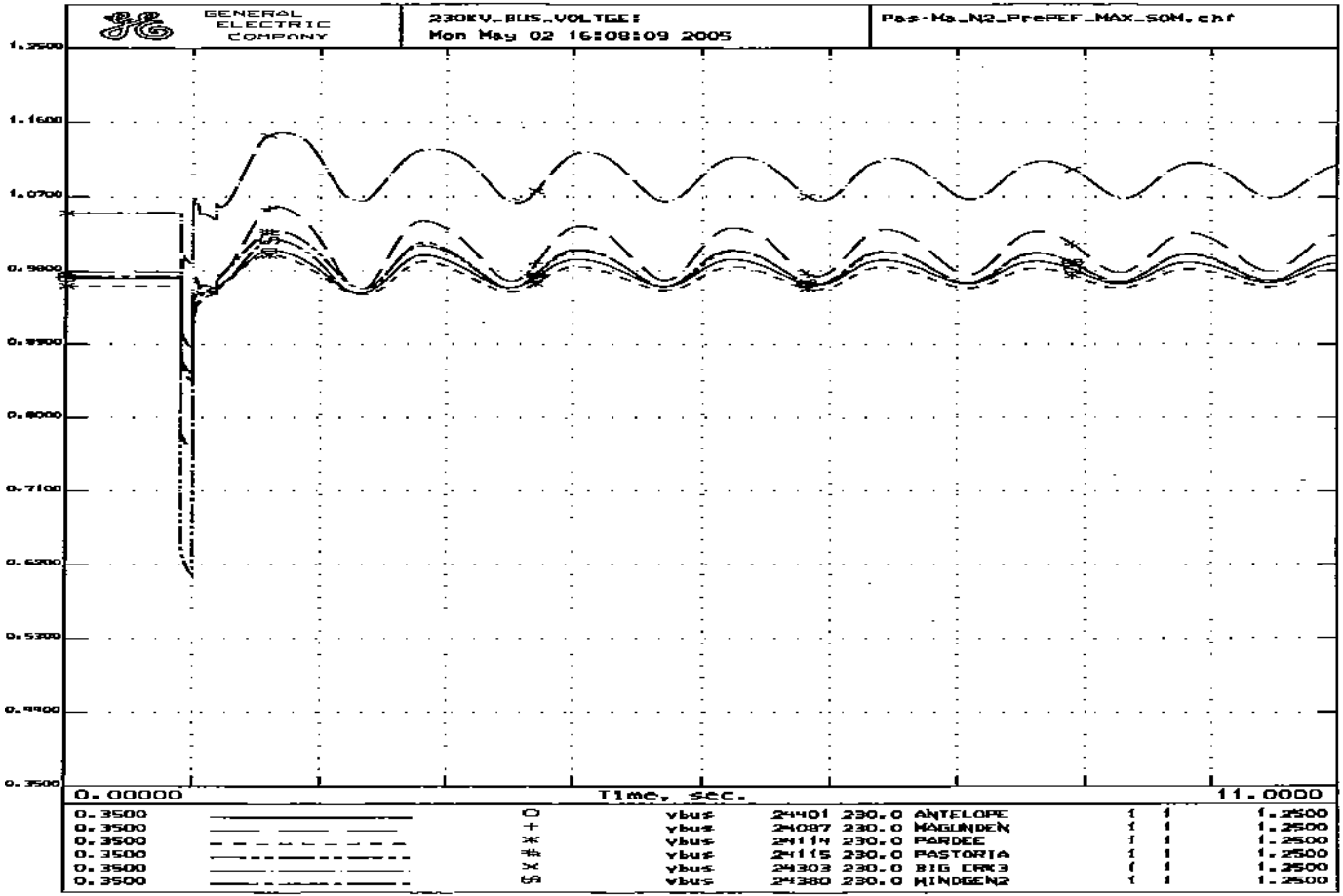
GENERAL ELECTRIC COMPANY
230KV_BUS_VOLTGE:
Mon May 02 16:09:09 2005
Pas-Ma_N2_PrePEF_MAX_SOM.chf
1.3500
1.1600
1.0700
0.9800
0.8900
0.8000
0.7100
0.6200
0.5300
0.4400
0.3500
0.00000
Time, sec.
11.0000
0.3500 O vbus 24401 230.0 ANTELOPE 1 1 1.2500
0.3500 + vbus 24087 230.0 MAGUNDEN 1 1 1.2500
0.3500 * vbus 24114 230.0 PARDEE 1 1 1.2500
0.3500 # vbus 24115 230.0 PASTORIA 1 1 1.2500
0.3500 X vbus 24303 230.0 BIG CRK3 1 1 1.2500
0.3500 @ vbus 24380 230.0 MINDGEN2 1 1 1.2500

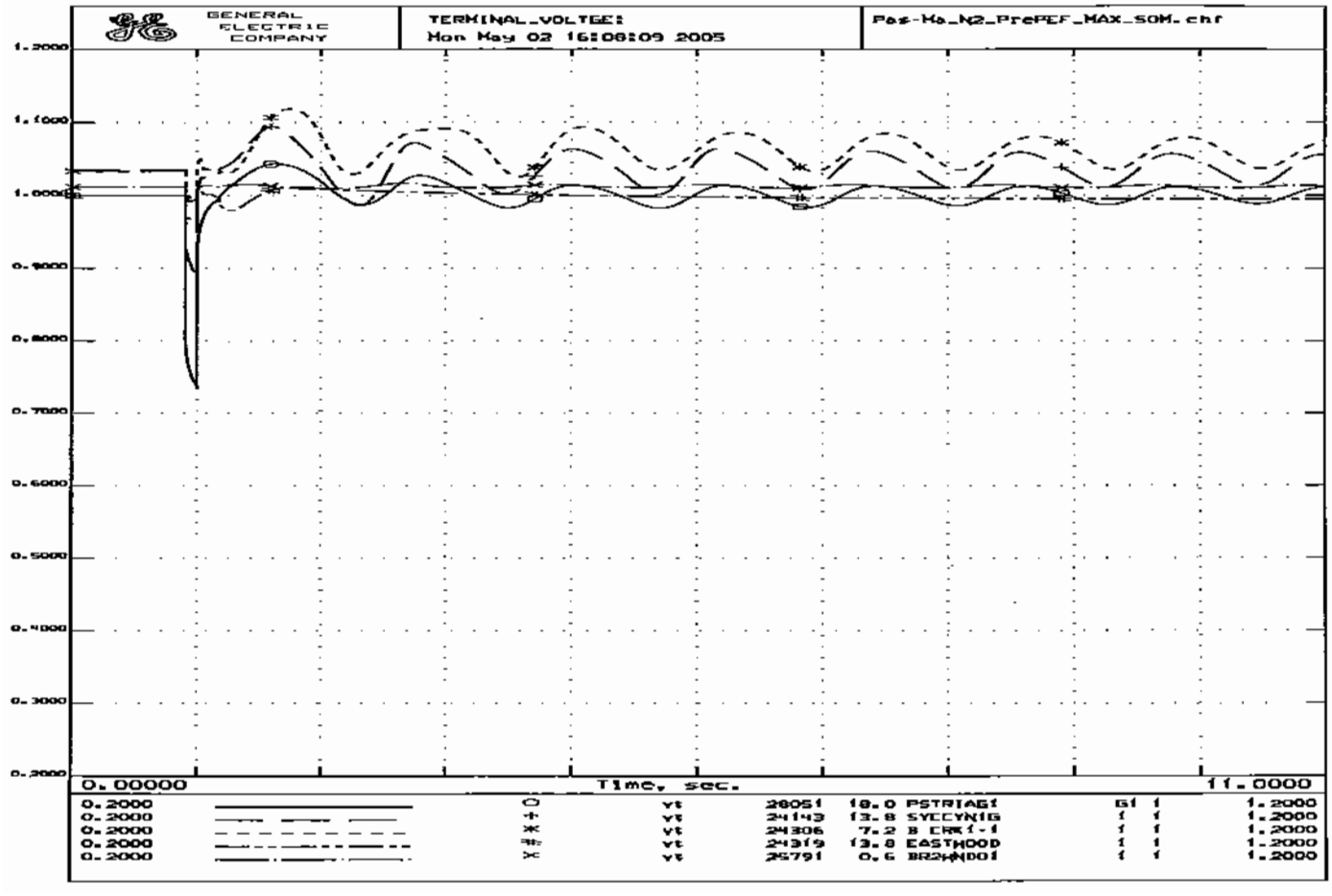
GENERAL ELECTRIC COMPANY
TERMINAL_VOLTGE:
Mon May 02 16:08:09 2005
Pas-Ma_N2_PrePEF_MAX_SOM.chf
1.2000
1.1000
1.0000
0.9000
0.8000
0.7000
0.6000
0.5000
0.4000
0.3000
0.2000
0.00000
Time, sec.
11.0000
0.2000 ○ vt 28051 10.0 PSTRIAG1 G1 1 1.2000
0.2000 + vt 24143 13.8 SYCCYNIG 1 1 1.2000
0.2000 ✳ vt 24306 7.2 B CRK1-1 1 1 1.2000
0.2000 ✳ vt 24319 13.8 EASTWOOD 1 1 1.2000
0.2000 ✳ vt 25791 0.6 BR2HNDO1 1 1 1.2000

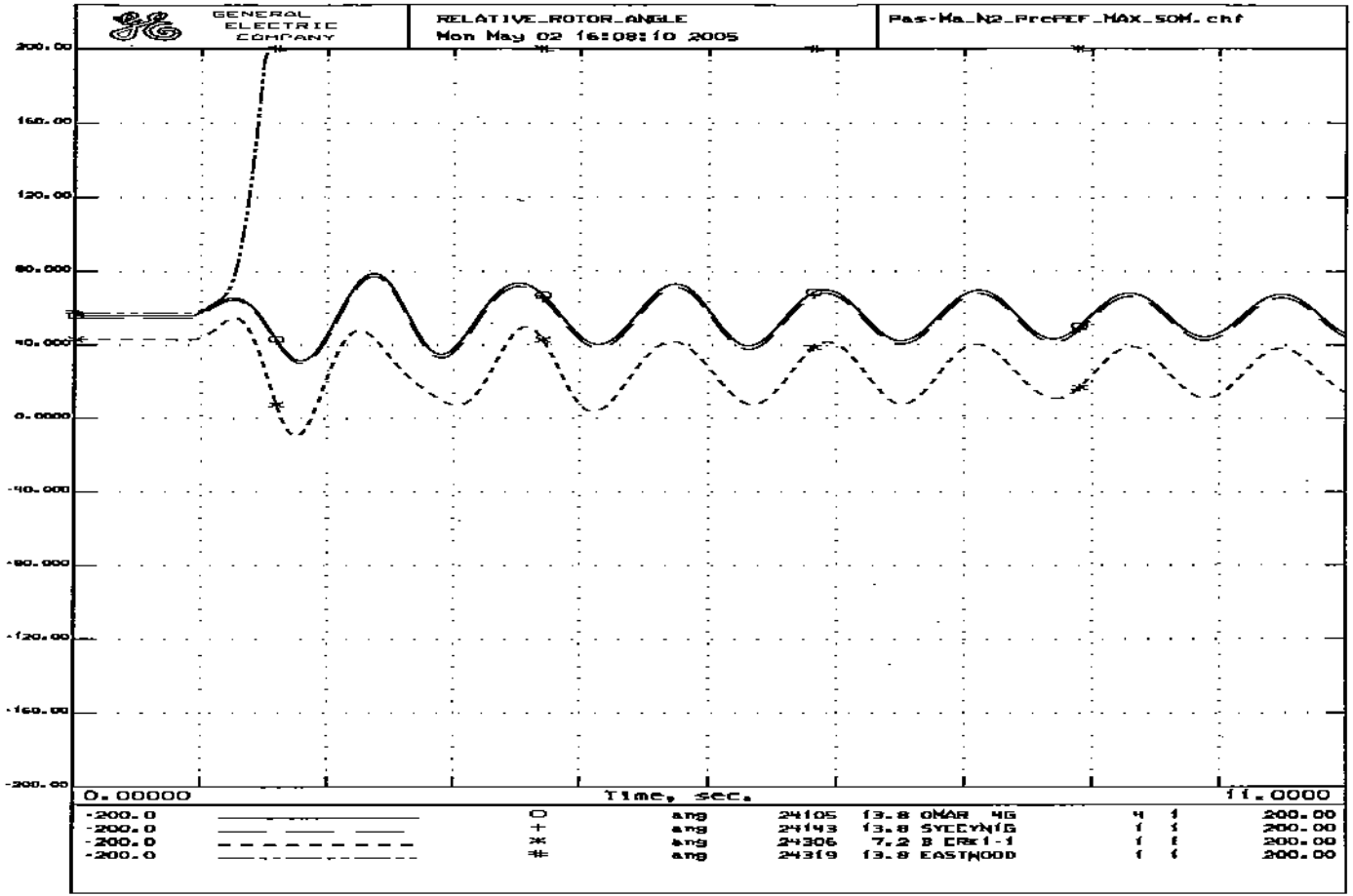
GENERAL ELECTRIC COMPANY
RELATIVE_ROTOR_ANGLE
Mon May 02 16:08:10 2005
Pas-Ma_N2_PrcPEF_MAX_50M.chf
200.00
160.00
120.00
80.000
40.000
0.0000
-40.000
-80.000
-120.00
-160.00
-200.00
0.00000
Time, sec.
11.0000
-200.0 ang 24105 13.8 OMAR 4G 4 1 200.00
-200.0 ang 24143 13.8 SYCCYNIG 1 1 200.00
-200.0 ang 24306 7.2 B ERK1-1 1 1 200.00
-200.0 ang 24319 13.8 EASTWOOD 1 1 200.00

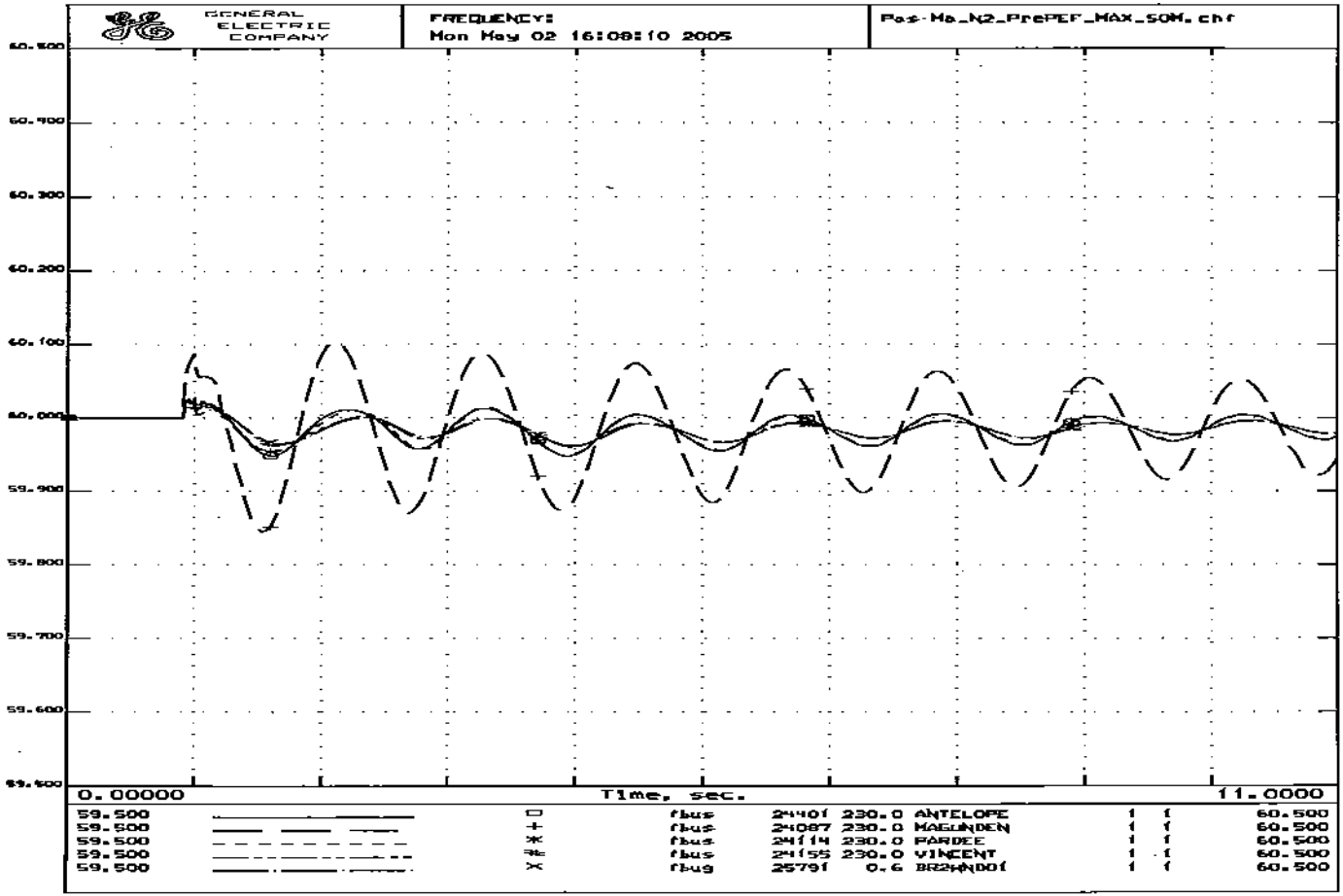
GENERAL ELECTRIC COMPANY
FREQUENCY:
Mon May 02 16:08:10 2005
Pos-Ma_N2_PrePEF_MAX_SOM.chf
60.500
60.400
60.300
60.200
60.100
60.000
59.900
59.800
59.700
59.600
59.500
0.00000
Time, sec.
11.0000
59.500 □ fbus 24401 230.0 ANTELOPE 1 1 60.500
59.500 + fbus 24087 230.0 MAGUNDEN 1 1 60.500
59.500 * fbus 24114 230.0 PARDEE 1 1 60.500
59.500 * fbus 24155 230.0 VINCENT 1 1 60.500
59.500 × fbus 25791 0.6 BRANDOI 1 1 60.500

```
PrePEF_MAX_SOM.sav
PrePEF.dyd
TITLE
Calpine Pastoria Addition Stability Study: Loss of Two 230-kV Lines
6-CYCLE 1-Phase Fault at Pastoria 230kV Bus
N-2 OUTAGE: Pardee-Pastoria and Pardee-Pastoria-Warne 230kV Lines
SYSTEM STABILITY CASE -. Pas-PPW_N2_PrePEF_MAX_SOM.swt
PrePEF_MAX_SOM.sav + PrePEF.dyd + Pas-PPW_N2_PrePEF_MAX_SOM.swt
RUN 10.0
CC
CC   ***Calpine Pastoria Addition DYNAMIC STABILITY ASSESSMENT***
CC   APPLY A 1-PHASE-TO-GROUND FAULT ON THE PASTORIA 230-KV BUS
PB   0.0 "PASTORIA" 230  0.00172 0.02058
CC
CC   CLEAR FAULT IN 6 CYCLES
CFB  6.0 "PASTORIA" 230
CC
CC   REMOVE PARDEE-PASTORIA 230-KV LINE
DL   6.0 "PARDEE   " 230.  "PASTORIA" 230.  "1 "
CC
CC   REMOVE PARDEE-PASTORIA-WARNE 230-KV LINE
TG   6.0 "WARNE1   " 13.80 "1 "
TG   6.0 "WARNE2   " 13.80 "1 "
DL   6.0 "PARDEE   " 230.  "WARNETAP" 230.  "1 "
DL   6.0 "WARNE    " 230.  "WARNETAP" 230.  "1 "
DL   6.0 "PASTORIA" 230.  "WARNETAP" 230.  "1 "
CC
CC   IMPLEMENT PEF SPECIAL PROTECTION SCHEME FOR N-2
TG   12.0 "PSTRIAS1" 18.00 "S1"
TG   12.0 "PSTRIAG1" 18.00 "G1"
TG   12.0 "PSTRIAG2" 18.00 "G2"
TG   12.0 "PSTRIAS2" 18.00 "S2"
TG   12.0 "PSTRIAG3" 18.00 "G3"
CC
CC   INITIATE SEL-68 STABILITY TRIP
TG   18.0 "MAMOTH1G" 13.80 "1 "
TG   18.0 "MAMOTH2G" 13.80 "2 "
TG   18.0 "EASTWOOD" 13.80 "1 "
```

GENERAL ELECTRIC COMPANY

500KV_BUS_VOLTGE:
Mon May 02 16:09:14 2005

Pas-PPA_N2_PrePEF_MAX_50M.chf

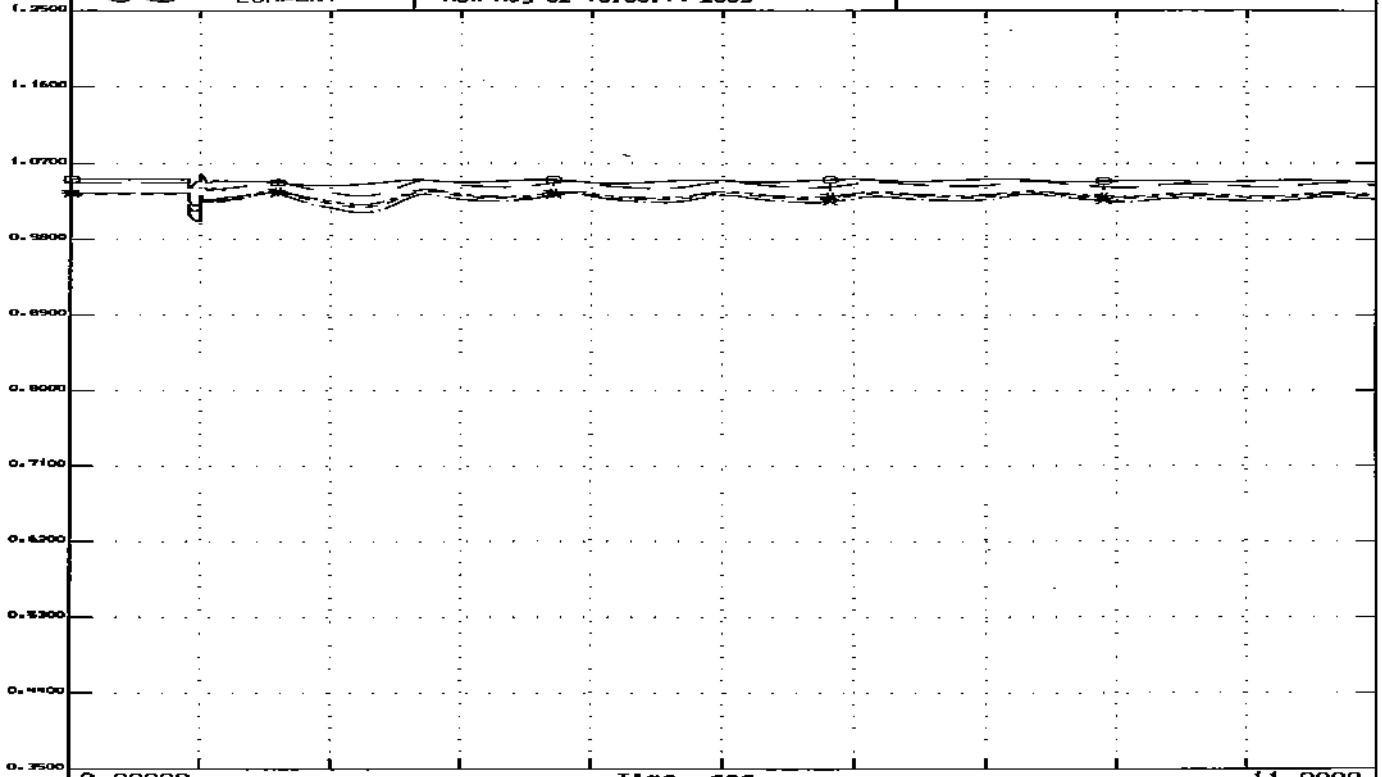

0.3500		o	vbus	24801	500.0	DEVERS	1	1	1.2500
0.3500		+	vbus	24086	500.0	LUGO	1	1	1.2500
0.3500		*	vbus	24092	500.0	MIRALOMA	1	1	1.2500
0.3500		#	vbus	24138	500.0	SERRANO	1	1	1.2500
0.3500		x	vbus	24156	500.0	VINCENT	1	1	1.2500

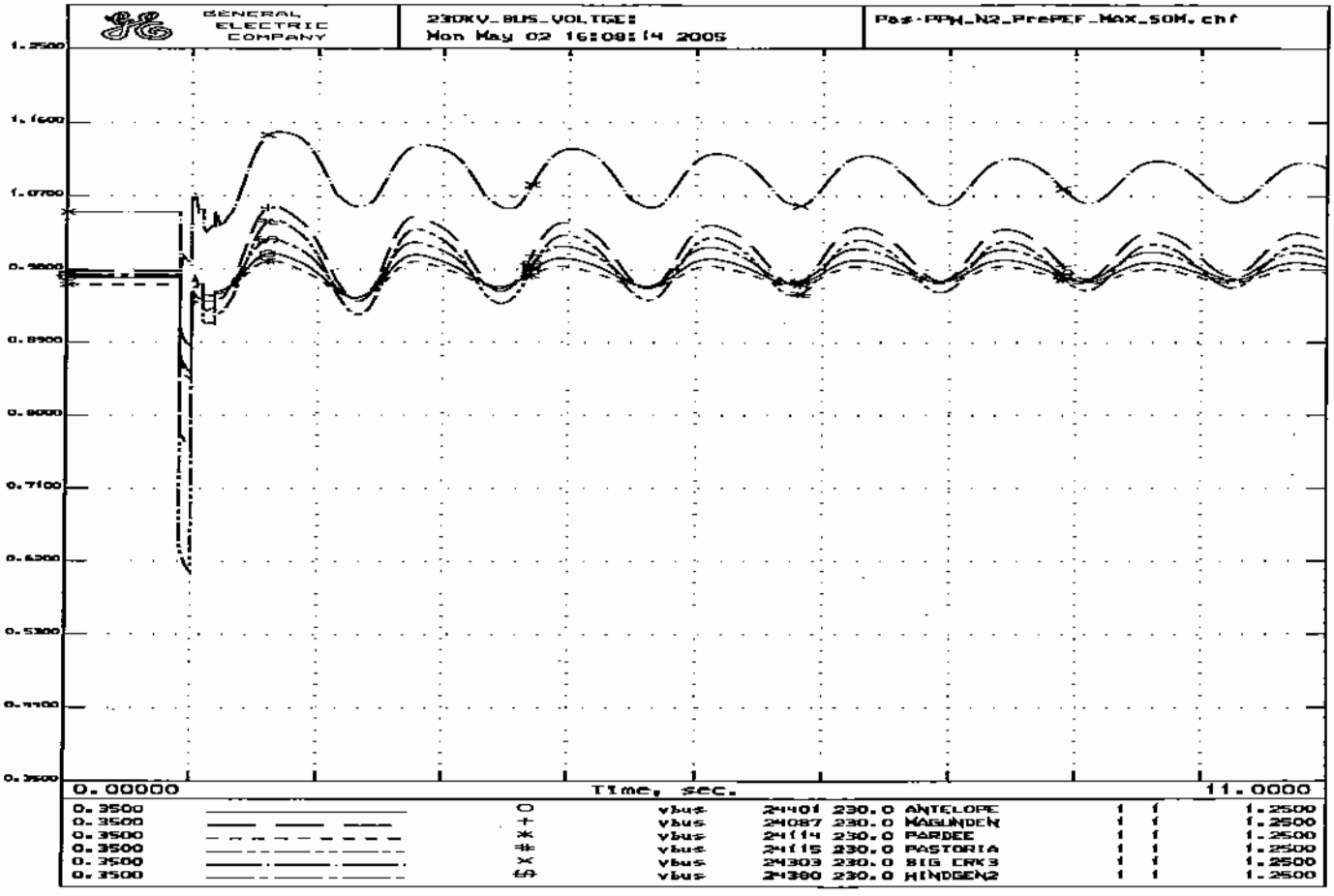
GENERAL ELECTRIC COMPANY
230KV_BUS_VOLTGE:
Mon May 02 16:08:14 2005
P&#-PPM_N2_PrePEF_MAX_50M.chf
1.2500
1.1600
1.0700
0.9800
0.8900
0.8000
0.7100
0.6200
0.5300
0.4400
0.3500
0.00000
Time, sec.
11.0000
0.3500 vbus 24401 230.0 ANTELOPE 1 1 1.2500
0.3500 vbus 24087 230.0 MAGUNDEN 1 1 1.2500
0.3500 vbus 24114 230.0 PARDEE 1 1 1.2500
0.3500 vbus 24115 230.0 PASTORIA 1 1 1.2500
0.3500 vbus 24303 230.0 BIG CRK3 1 1 1.2500
0.3500 vbus 24380 230.0 WINDGEN2 1 1 1.2500

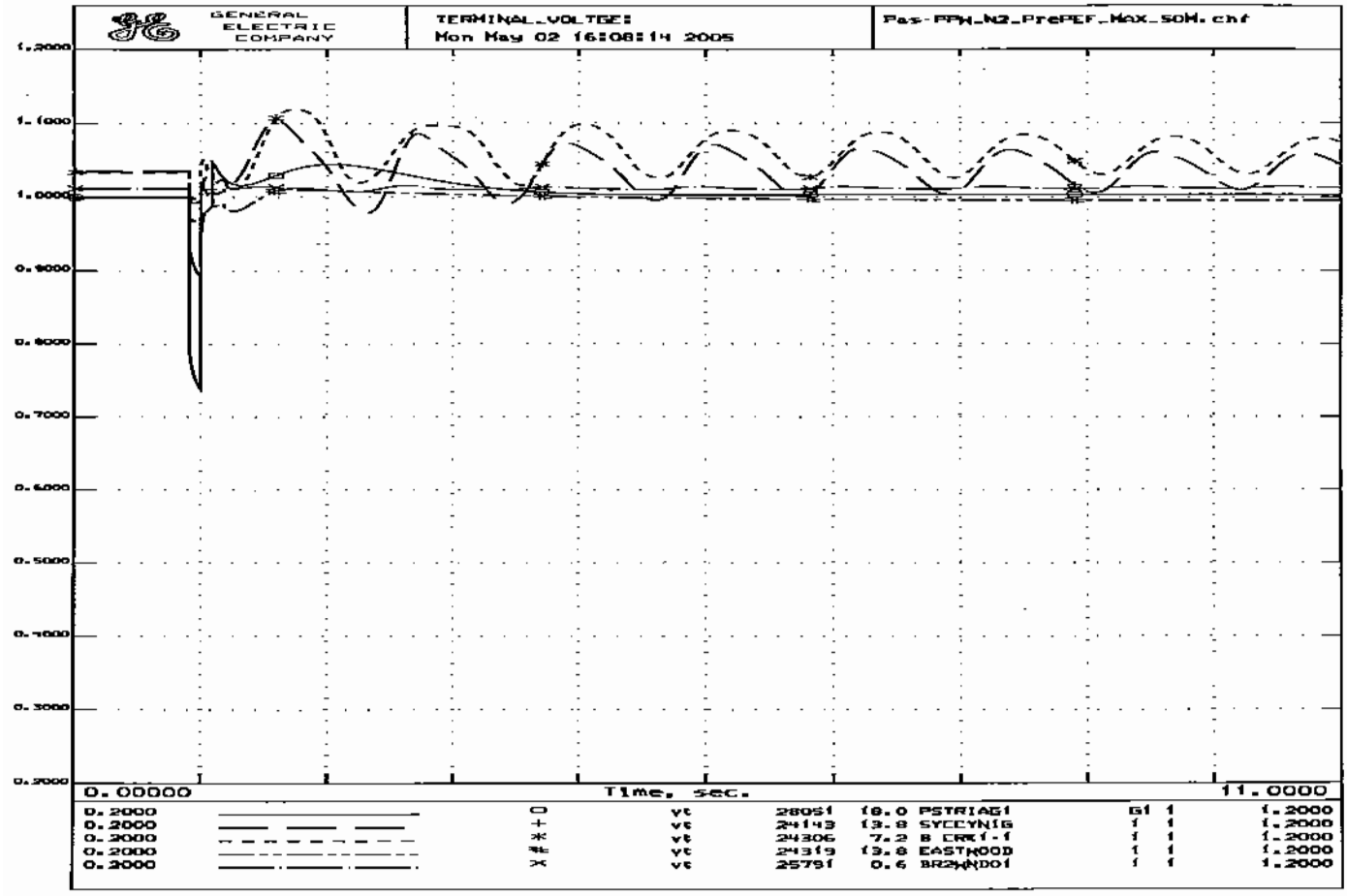
GENERAL ELECTRIC COMPANY
TERMINAL_VOLTGE:
Mon May 02 16:08:14 2005
Pas-PPM_N2_PrePEF_MAX_50M.chf
1.2000
1.1000
1.0000
0.9000
0.8000
0.7000
0.6000
0.5000
0.4000
0.3000
0.2000
0.00000
Time, sec.
11.0000
0.2000 ○ vt 28051 18.0 PSTRIAG1 G1 1 1.2000
0.2000 + vt 24143 13.8 SYCCYNIG 1 1 1.2000
0.2000 * vt 24306 7.2 B CRK1-1 1 1 1.2000
0.2000 ⊠ vt 24319 13.8 EASTWOOD 1 1 1.2000
0.2000 × vt 25791 0.6 BRZWNDO1 1 1 1.2000

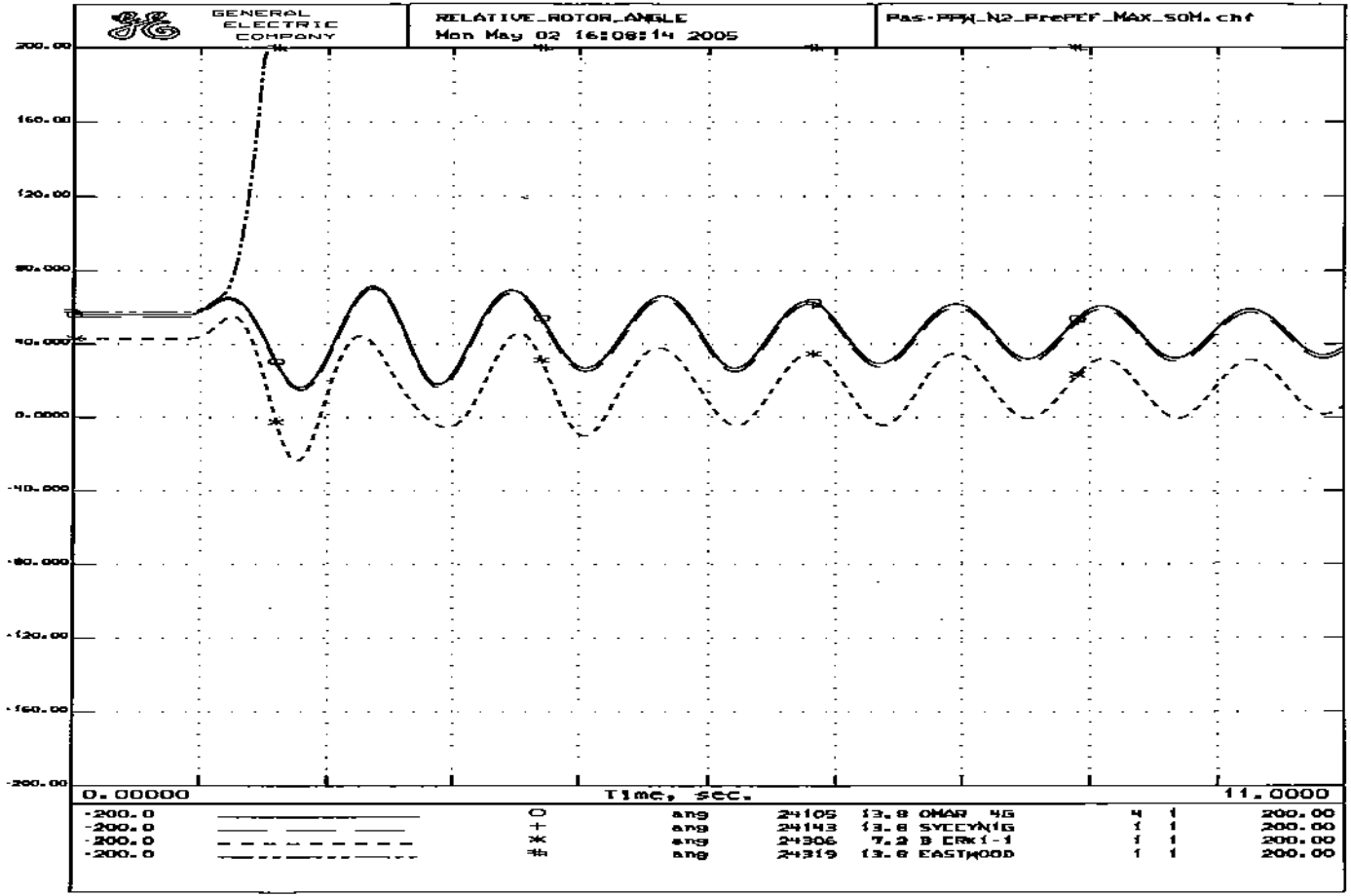
GENERAL ELECTRIC COMPANY
RELATIVE_ROTOR_ANGLE
Mon May 02 16:08:14 2005
Pas-PPW_N2_PrePEF_MAX_SOM.chf
200.00
160.00
120.00
80.000
40.000
0.0000
-40.000
-80.000
-120.00
-160.00
-200.00
0.00000
Time, sec.
11.0000
-200.0 ○ ang 24105 13.8 OMAR 4G 4 1 200.00
-200.0 + ang 24143 13.8 SYCCYN1G 1 1 200.00
-200.0 * ang 24306 7.2 B ERK1-1 1 1 200.00
-200.0 # ang 24319 13.8 EASTWOOD 1 1 200.00

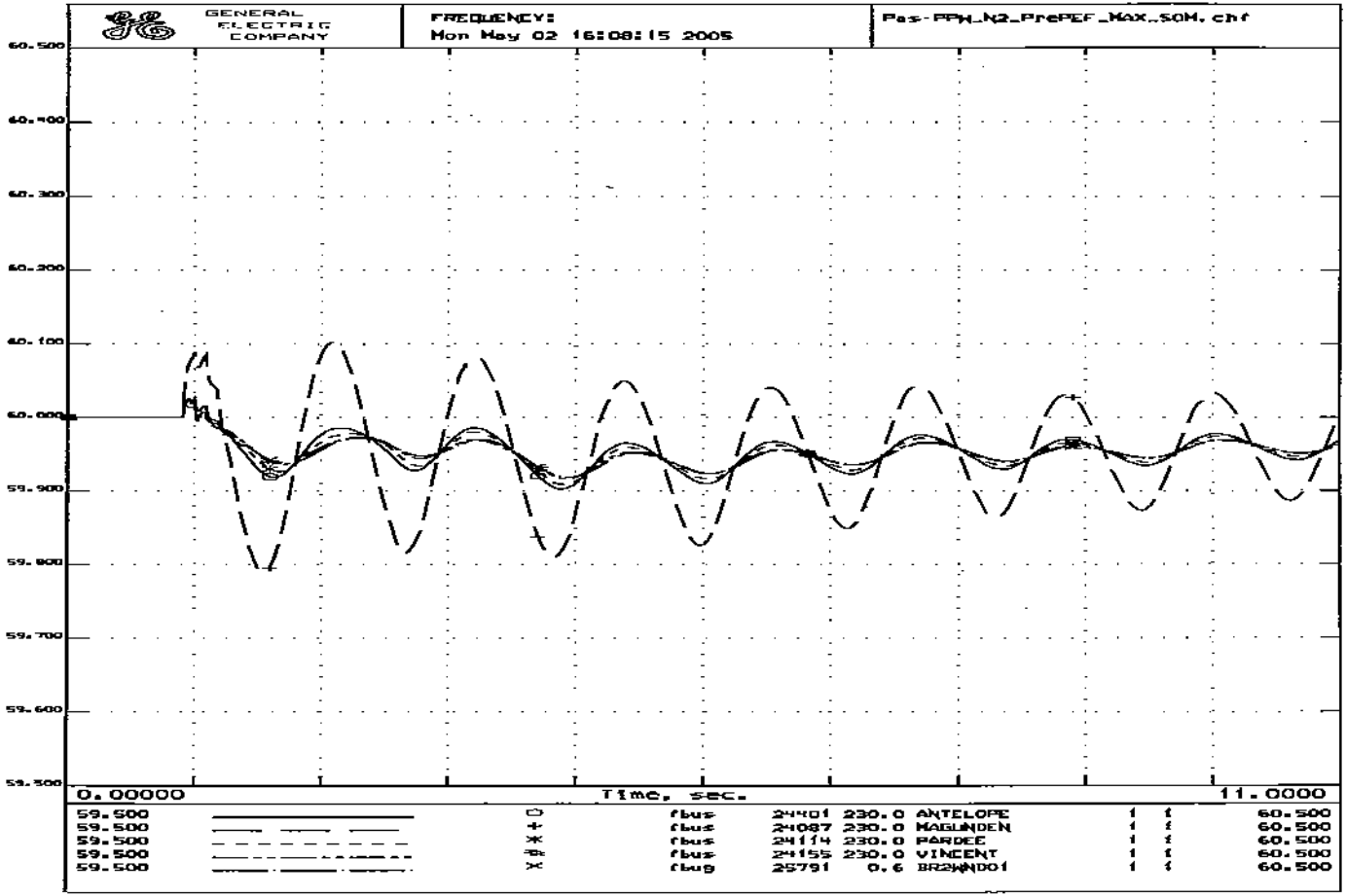
GENERAL ELECTRIC COMPANY
FREQUENCY:
Mon May 02 16:08:15 2005
Pas-PPW_N2_PrePEF_MAX_50M.chf
60.500
60.400
60.300
60.200
60.100
60.000
59.900
59.800
59.700
59.600
59.500
0.00000
Time, sec.
11.0000
59.500 □ fbus 24401 230.0 ANTELOPE 1 1 60.500
59.500 + fbus 24087 230.0 MAGUNDEN 1 1 60.500
59.500 * fbus 24114 230.0 PARDEE 1 1 60.500
59.500 # fbus 24155 230.0 VINCENT 1 1 60.500
59.500 X fbus 25791 0.6 BR2WNDO1 1 1 60.500

```
PrePEF_MAX_SOM.sav
PrePEF.dyd
TITLE
Calpine Pastoria Addition Stability Study: Loss of Two 230-kV Lines
6-CYCLE 1-Phase Fault at Pardee 230kV Bus
N-2 OUTAGE: Pardee-Bailey and Pardee-Pastoria 230kV Lines
SYSTEM STABILITY CASE -. P-BPas_N2_PrePEF_MAX_SOM.swt
PrePEF_MAX_SOM.sav + PrePEF.dyd + P-BPas_N2_PrePEF_MAX_SOM.swt
RUN 10.0
CC
CC   ***Calpine Pastoria Addition DYNAMIC STABILITY ASSESSMENT***
CC   APPLY A 1-PHASE-TO-GROUND FAULT ON THE PARDEE 230-KV BUS
FB   0.0 "PARDEE   " 230   0.00126 0.01595
CC
CC   CLEAR FAULT IN 6 CYCLES
CFB  6.0 "PARDEE   " 230
CC
CC   REMOVE PARDEE-BAILEY 230-KV LINE
DL   6.0 "PARDEE   " 230. "BAILEY   " 230. "1 "
CC
CC   REMOVE PARDEE-PASTORIA 230-KV LINE
DL   6.0 "PARDEE   " 230. "PASTORIA" 230. "1 "
CC
CC   IMPLEMENT PEF SPECIAL PROTECTION SCHEME FOR N-2
TG   12.0 "PSTRIAS1" 18.00 "S1"
TG   12.0 "PSTRIAG1" 18.00 "G1"
TG   12.0 "PSTRIAG2" 18.00 "G2"
TG   12.0 "PSTRIAS2" 18.00 "S2"
TG   12.0 "PSTRIAG3" 18.00 "G3"
CC
CC   INITIATE SEL-68 STABILITY TRIP
TG   18.0 "MAMOTH1G" 13.80 "1 "
TG   18.0 "MAMOTH2G" 13.80 "2 "
TG   18.0 "EASTWOOD" 13.80 "1 "
```

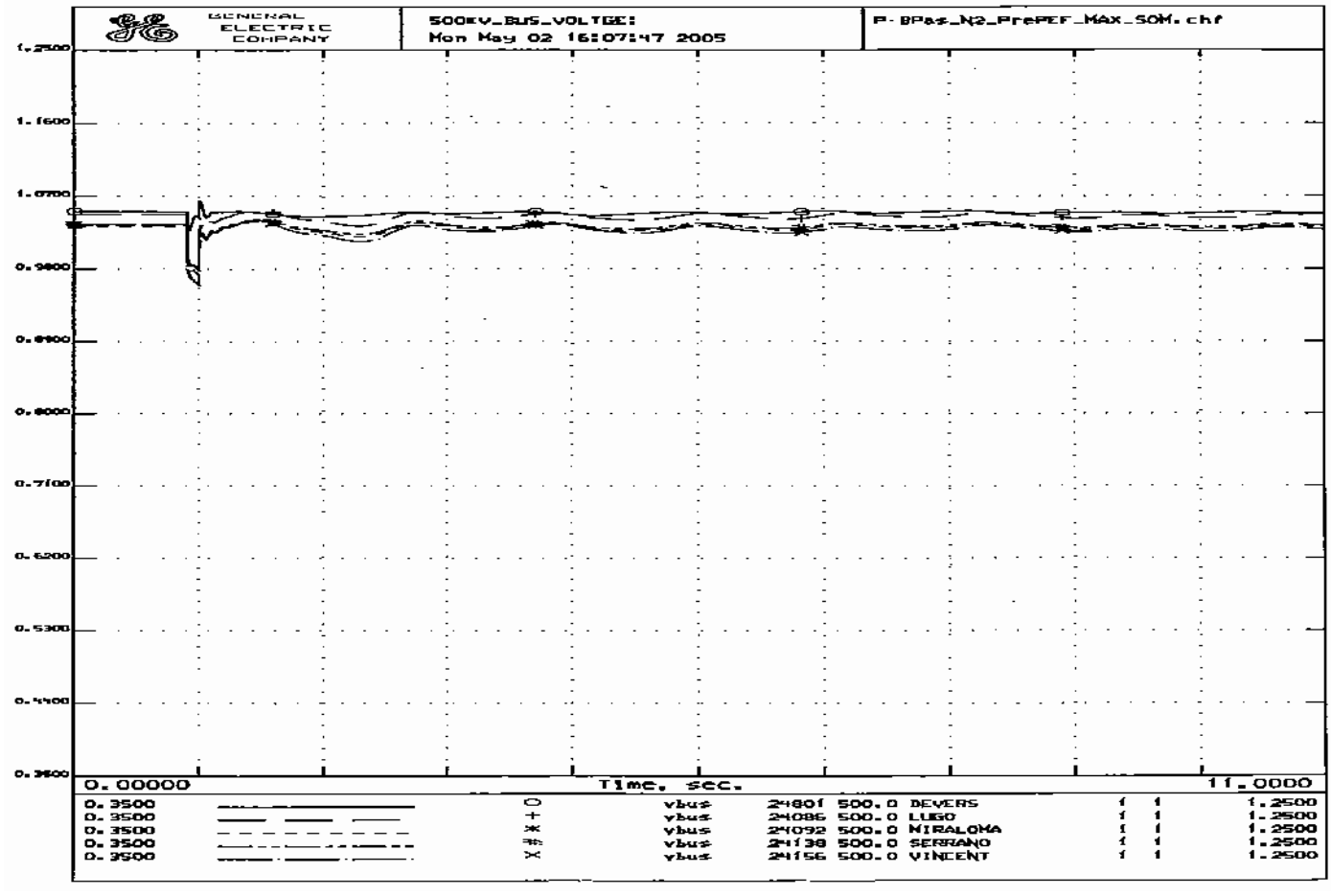
GENERAL ELECTRIC COMPANY
500kV_BUS_VOLTGE:
Mon May 02 16:07:47 2005
P-BPas_N2_PrePEF_MAX_SOM.chf
1.2500
1.1600
1.0700
0.9800
0.8900
0.8000
0.7100
0.6200
0.5300
0.4400
0.3500
0.00000
Time, sec.
11.0000
0.3500 ○ vbus 24801 500.0 DEVERS 1 1 1.2500
0.3500 + vbus 24086 500.0 LUGO 1 1 1.2500
0.3500 * vbus 24092 500.0 MIRALOMA 1 1 1.2500
0.3500 # vbus 24138 500.0 SERRANO 1 1 1.2500
0.3500 × vbus 24156 500.0 VINCENT 1 1 1.2500

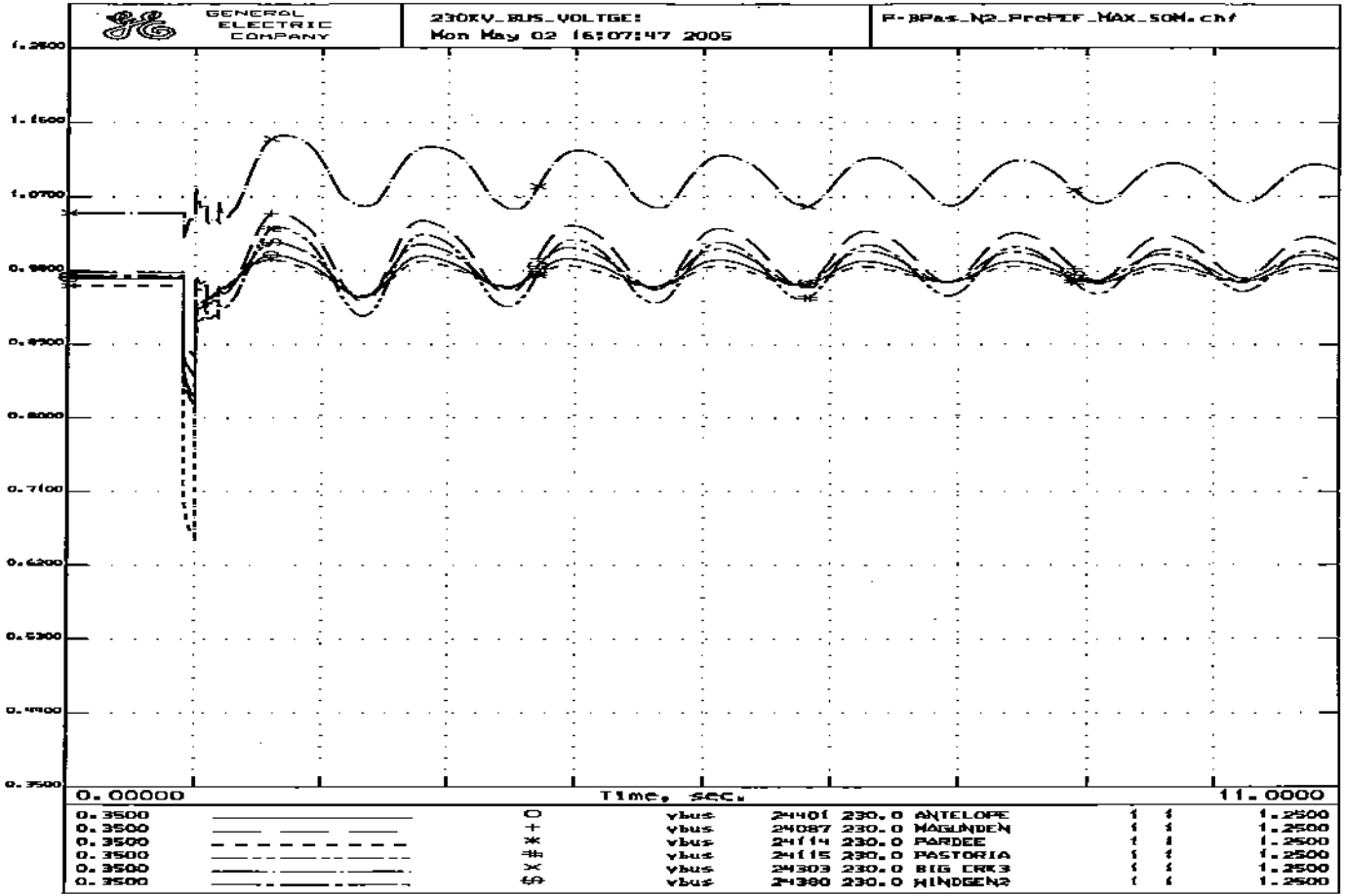
GENERAL ELECTRIC COMPANY
230KV_BUS_VOLTGE:
Mon May 02 16:07:47 2005
F-BPas_N2_PrePEF_MAX_50M.chf
1.2800
1.1500
1.0700
0.9800
0.8900
0.8000
0.7100
0.6200
0.5300
0.4400
0.3500
0.00000
Time, sec.
11.0000
0.3500 O vbus 24401 230.0 ANTELOPE 1 1 1.2500
0.3500 + vbus 24087 230.0 MASLINDEN 1 1 1.2500
0.3500 * vbus 24114 230.0 PARDEE 1 1 1.2500
0.3500 # vbus 24115 230.0 PASTORIA 1 1 1.2500
0.3500 X vbus 24303 230.0 BIG CRK3 1 1 1.2500
0.3500 vbus 24380 230.0 WINDGEN2 1 1 1.2500

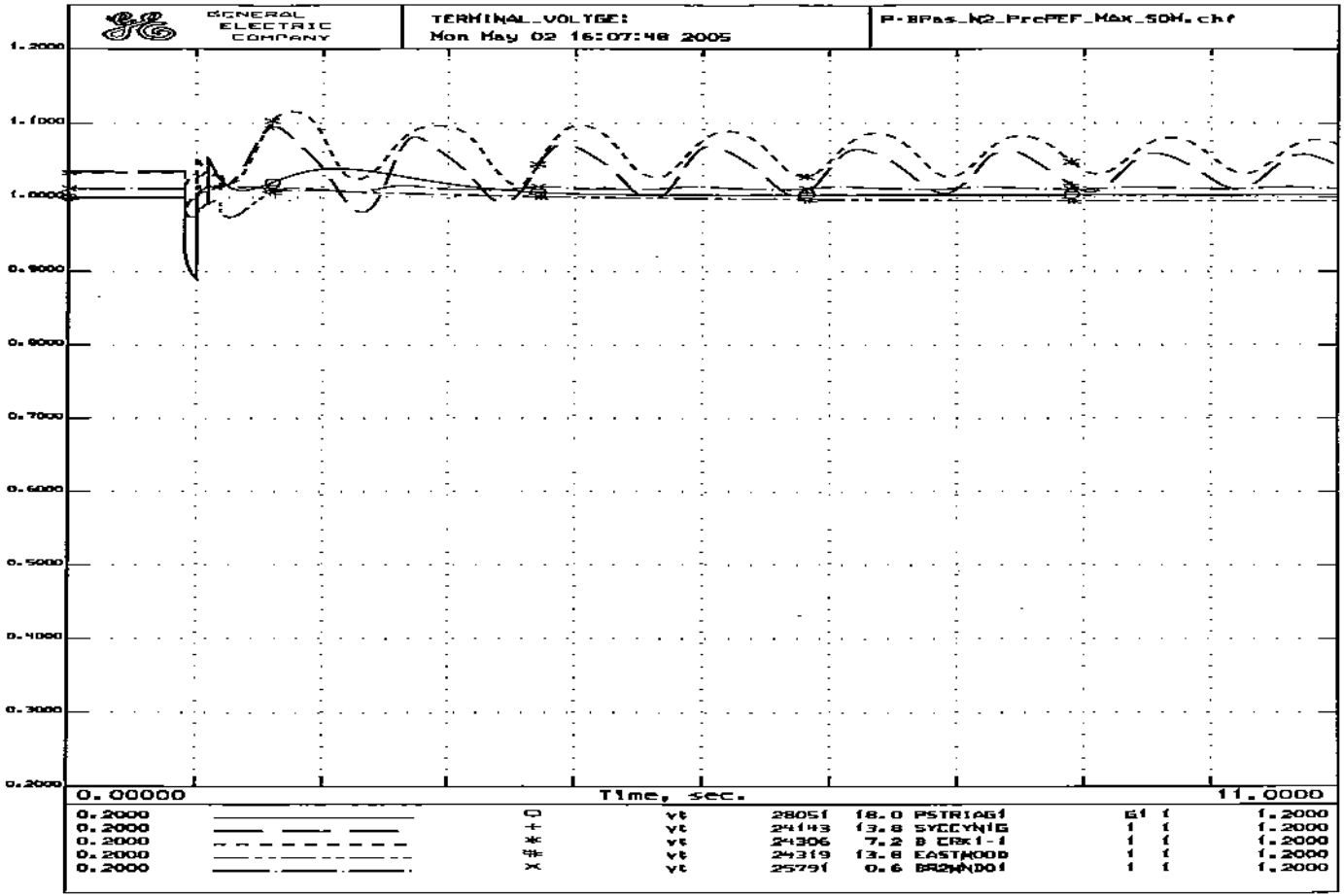
GENERAL ELECTRIC COMPANY
TERMINAL_VOLTGE:
Mon May 02 16:07:48 2005
P-BPas_N2_PrcPEF_MAX_SOH.chf
1.2000
1.1000
1.0000
0.9000
0.8000
0.7000
0.6000
0.5000
0.4000
0.3000
0.2000
0.00000
Time, sec.
11.0000
0.2000 ○ vt 28051 18.0 PSTRIAG1 E1 1 1.2000
0.2000 + vt 24143 13.8 SYCCYNIG 1 1 1.2000
0.2000 * vt 24306 7.2 B CRK1-1 1 1 1.2000
0.2000 # vt 24319 13.8 EASTWOOD 1 1 1.2000
0.2000 × vt 25791 0.6 BR2WNDO1 1 1 1.2000

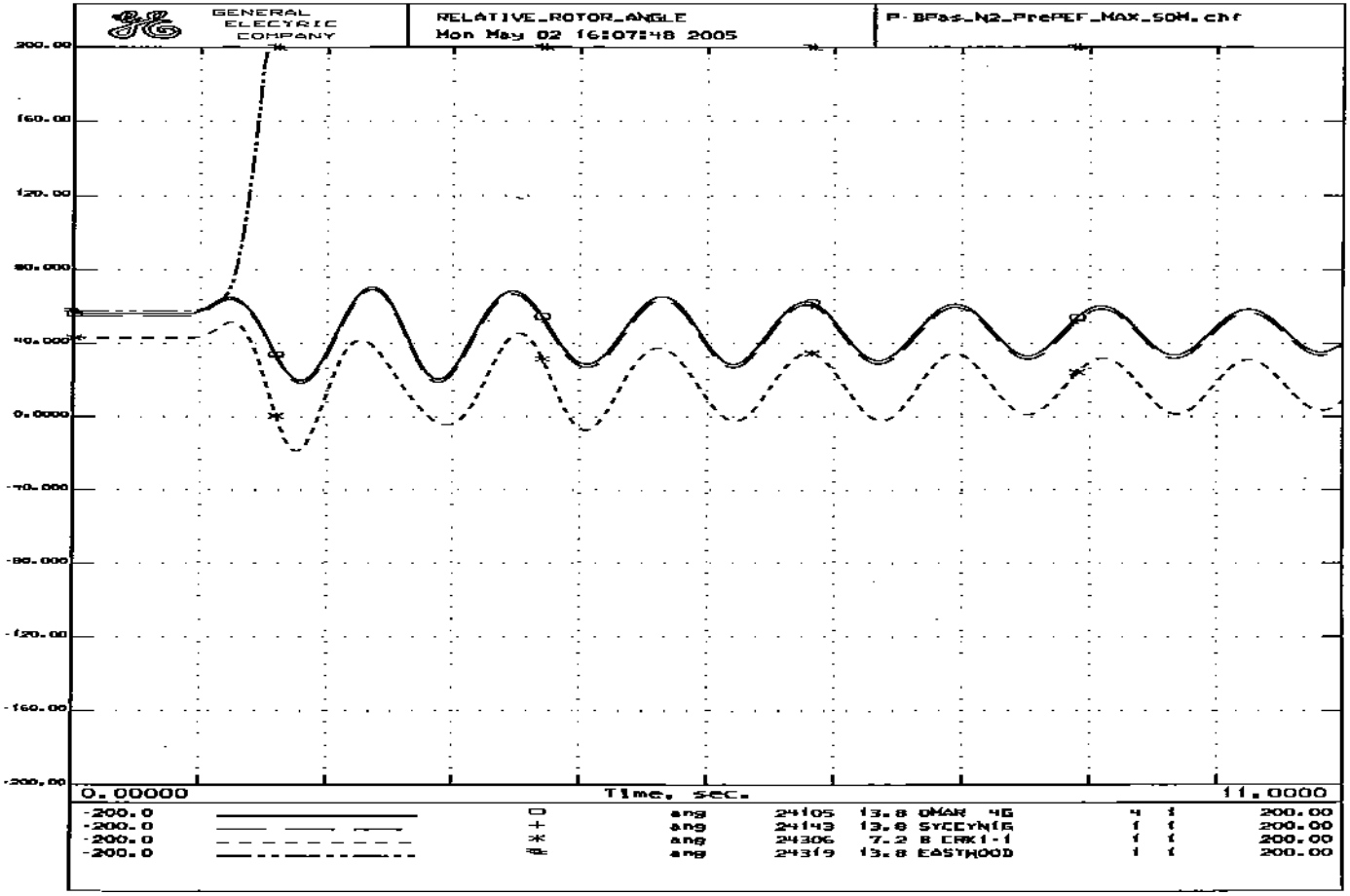
GENERAL ELECTRIC COMPANY
RELATIVE_ROTOR_ANGLE
Mon May 02 16:07:48 2005
P-BPas_N2_PrePEF_MAX_50M.chf
200.00
160.00
120.00
80.000
40.000
0.0000
-40.000
-80.000
-120.00
-160.00
-200.00
0.00000
Time, sec.
11.0000
-200.0 ang 24105 13.8 OMAR 4G 4 1 200.00
-200.0 ang 24143 13.8 SYCCYNIG 1 1 200.00
-200.0 ang 24306 7.2 8 ERK1-1 1 1 200.00
-200.0 ang 24319 13.8 EASTWOOD 1 1 200.00

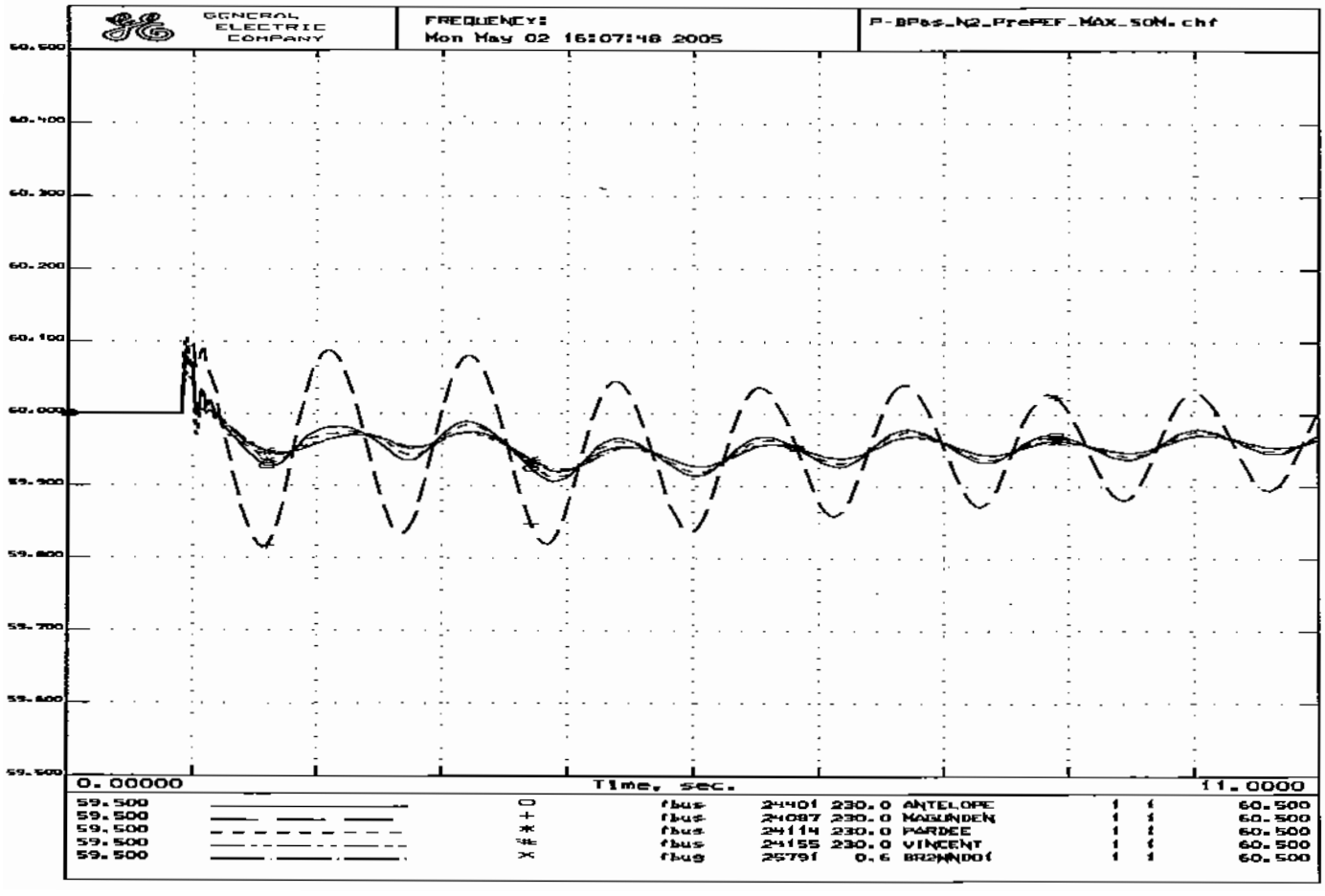
GENERAL ELECTRIC COMPANY
FREQUENCY:
Mon May 02 16:07:48 2005
P-BPas_N2_PrePEF_MAX_SON.chf
60.500
60.400
60.300
60.200
60.100
60.000
59.900
59.800
59.700
59.600
59.500
0.00000
Time, sec.
11.0000
59.500 ○ fbus 24401 230.0 ANTELOPE 1 1 60.500
59.500 + fbus 24087 230.0 MAGUNDEN 1 1 60.500
59.500 * fbus 24114 230.0 PARDEE 1 1 60.500
59.500 # fbus 24155 230.0 VINCENT 1 1 60.500
59.500 × fbus 25791 0.6 BR2WNDO1 1 1 60.500

```
PrePEF_MAX_SOM.sav
PrePEF.dyd
TITLE
Calpine Pastoria Addition Stability Study: Loss of Two 230-kV Lines
6-CYCLE 1-Phase Fault at Pardee 230kV Bus
N-2 OUTAGE: Pardee-Pastoria and Pardee-Pastoria-Warne 230kV Lines
SYSTEM STABILITY CASE - P-PasPW_N2_PrePEF_MAX_SOM.swt
PrePEF_MAX_SOM.sav + PrePEF.dyd + P-PasPW_N2_PrePEF_MAX_SOM.swt
RUN 10.0
CC
CC   ***Calpine Pastoria Addition DYNAMIC STABILITY ASSESSMENT***
CC   APPLY A 1-PHASE-TO-GROUND FAULT ON THE PARDEE 230-KV BUS
FB   0.0 "PARDEE   " 230  0.00126 0.01595
CC
CC   CLEAR FAULT IN 6 CYCLES
CFB  6.0 "PARDEE   " 230
CC
CC   REMOVE PARDEE-PASTORIA 230-KV LINE
DL   6.0 "PARDEE   " 230. "PASTORIA" 230. "1 "
CC
CC   REMOVE PARDEE-PASTORIA-WARNE 230-KV LINE
TG   6.0 "WARNE1   " 13.80 "1 "
TG   6.0 "WARNE2   " 13.80 "1 "
DL   6.0 "PARDEE   " 230. "WARNETAP" 230. "1 "
DL   6.0 "WARNE    " 230. "WARNETAP" 230. "1 "
DL   6.0 "PASTORIA" 230. "WARNETAP" 230. "1 "
CC
CC   IMPLEMENT PEF SPECIAL PROTECTION SCHEME FOR N-2
TG   12.0 "PSTRIAS1" 18.00 "S1"
TG   12.0 "PSTRIAG1" 18.00 "G1"
TG   12.0 "PSTRIAG2" 18.00 "G2"
TG   12.0 "PSTRIAS2" 18.00 "S2"
TG   12.0 "PSTRIAG3" 18.00 "G3"
CC
CC   INITIATE SEL-68 STABILITY TRIP
TG   18.0 "MAMOTH1G" 13.80 "1 "
TG   18.0 "MAMOTH2G" 13.80 "2 "
TG   18.0 "EASTWOOD" 13.80 "1 "
```

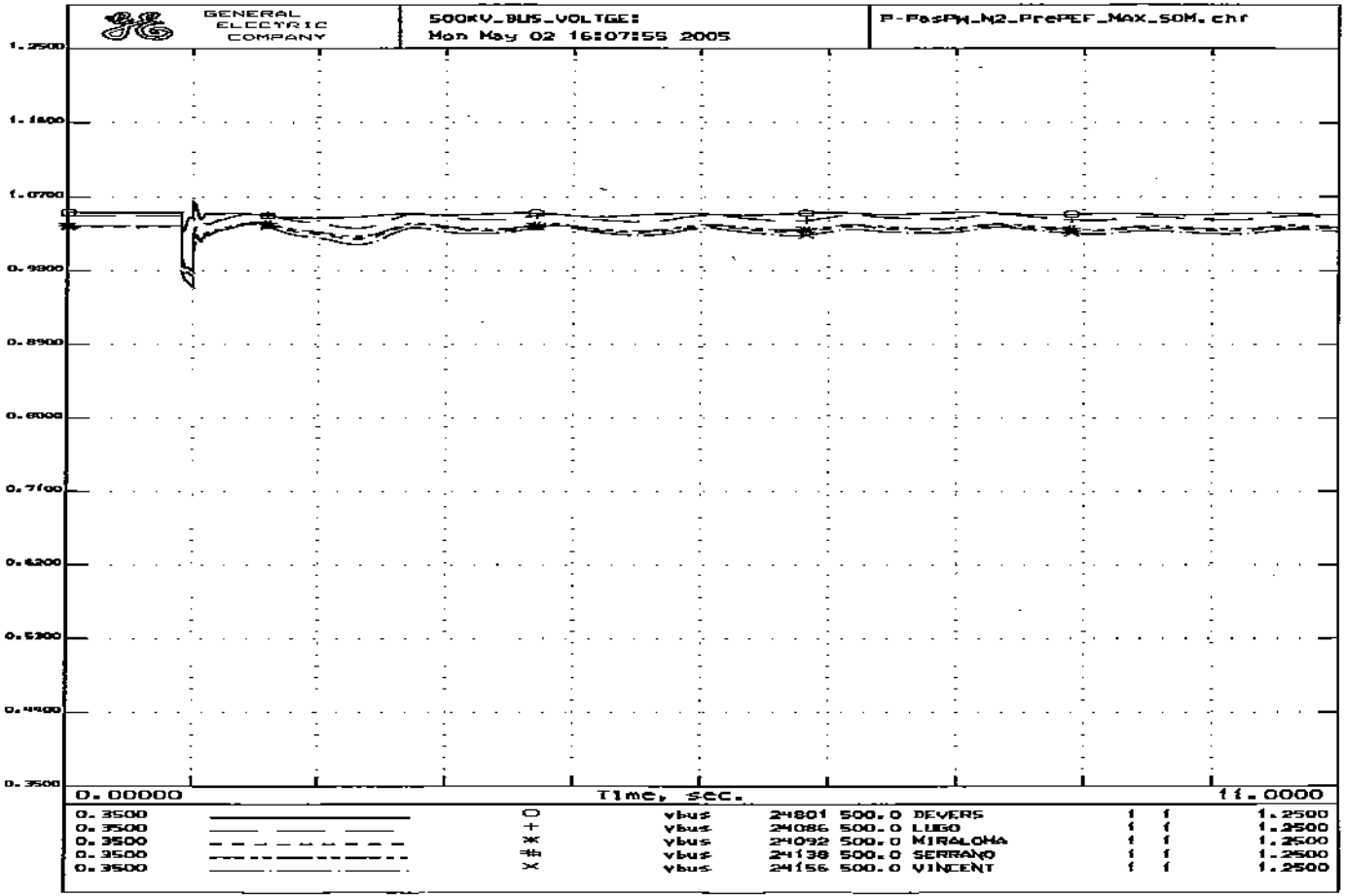
GENERAL ELECTRIC COMPANY
500KV_BUS_VOLTGE:
Mon May 02 16:07:55 2005
P-PasPW_N2_PrePEF_MAX_50M.chf
1.2500
1.1400
1.0300
0.9200
0.8100
0.7000
0.6200
0.5300
0.4400
0.3500
0.00000
Time, sec.
11.0000
0.3500 ○ vbus 24801 500.0 DEVERS 1 1 1.2500
0.3500 + vbus 24086 500.0 LUGO 1 1 1.2500
0.3500 * vbus 24092 500.0 MIRALOMA 1 1 1.2500
0.3500 # vbus 24138 500.0 SERRANO 1 1 1.2500
0.3500 × vbus 24156 500.0 VINCENT 1 1 1.2500

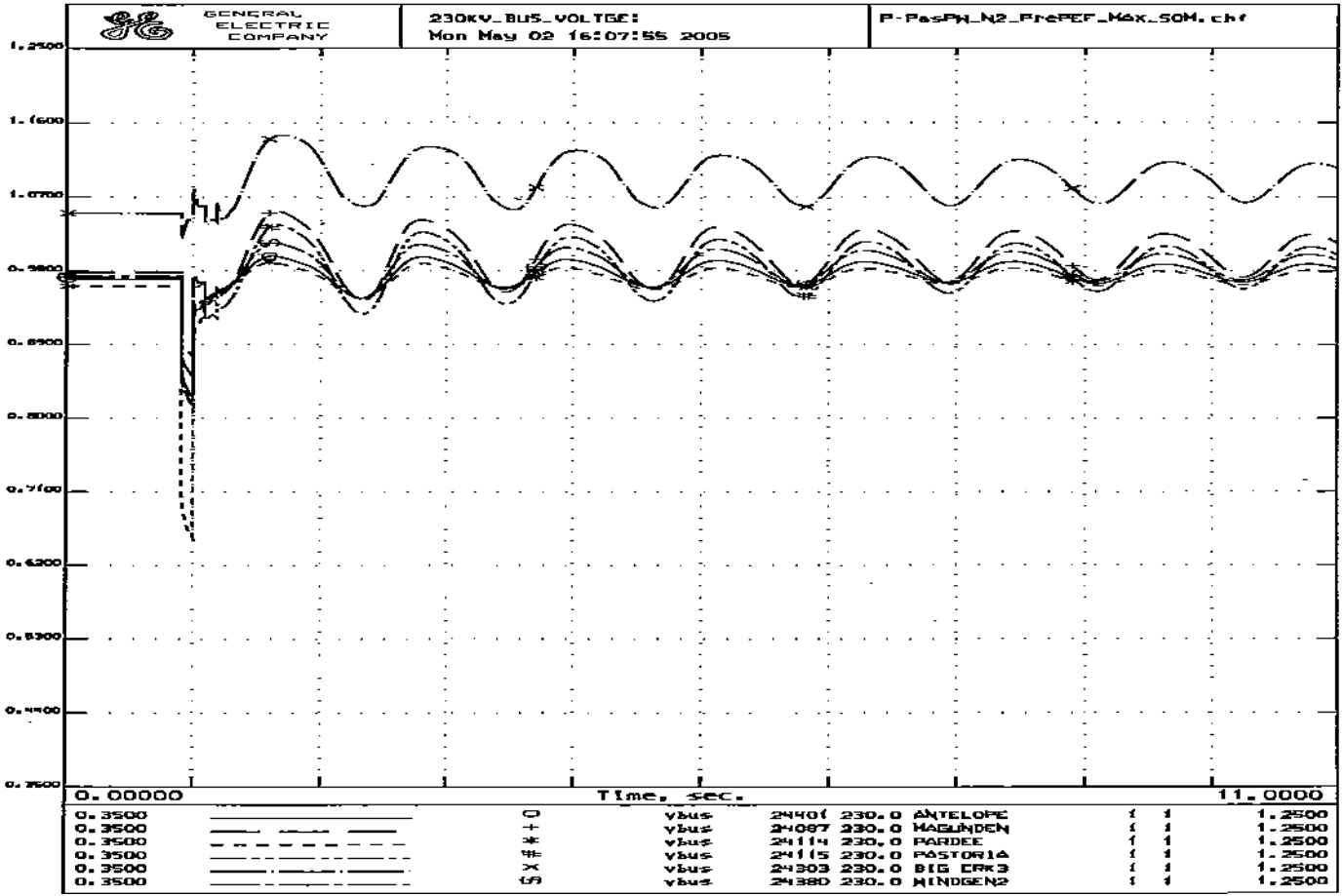
GENERAL ELECTRIC COMPANY
230KV_BUS_VOLTGE:
Mon May 02 16:07:55 2005
P-PasPW_N2_PrePEF_MAX_SOM.chf
1.2500
1.1600
1.0700
0.9800
0.8900
0.8000
0.7100
0.6200
0.5300
0.4400
0.3500
0.00000
Time, sec.
11.0000
0.3500 O vbus 24401 230.0 ANTELOPE 1 1 1.2500
0.3500 + vbus 24087 230.0 MAGUNDEN 1 1 1.2500
0.3500 * vbus 24114 230.0 PARDEE 1 1 1.2500
0.3500 # vbus 24115 230.0 PASTORIA 1 1 1.2500
0.3500 X vbus 24303 230.0 BIG CRK3 1 1 1.2500
0.3500 vbus 24380 230.0 WINDGEN2 1 1 1.2500

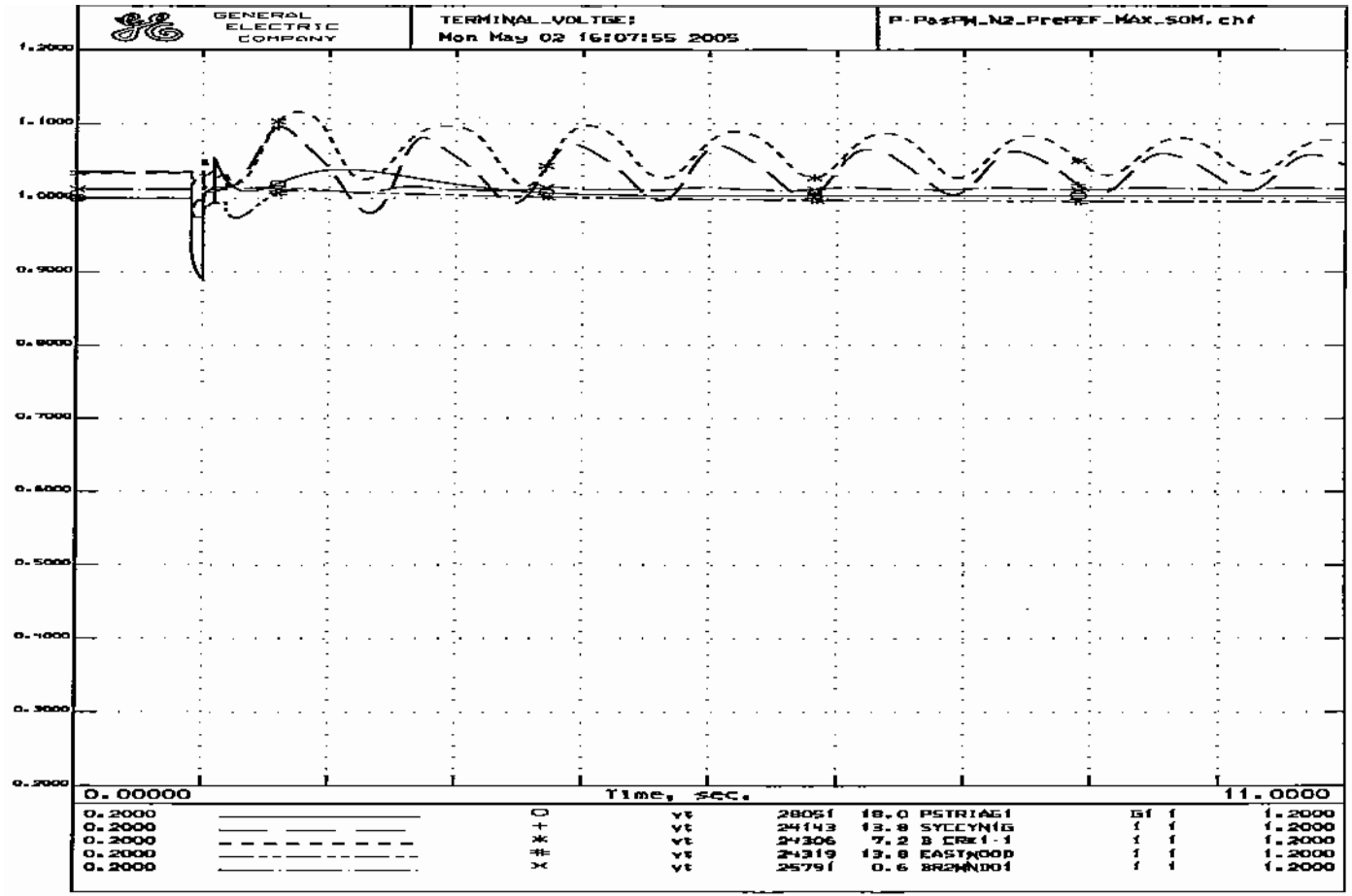
GENERAL ELECTRIC COMPANY
TERMINAL_VOLTGE:
Mon May 02 16:07:55 2005
P-PasPH_N2_PrePEF_MAX_SOM.chf
1.2000
1.1000
1.0000
0.9000
0.8000
0.7000
0.6000
0.5000
0.4000
0.3000
0.2000
0.00000
Time, sec.
11.0000
0.2000 ○ vt 28051 18.0 PSTRIAG1 Gf 1 1.2000
0.2000 + vt 24143 13.8 SYCCYN1G 1 1 1.2000
0.2000 * vt 24306 7.2 B CR#1-1 1 1 1.2000
0.2000 # vt 24319 13.8 EASTWOOD 1 1 1.2000
0.2000 × vt 25791 0.6 BR2WN001 1 1 1.2000

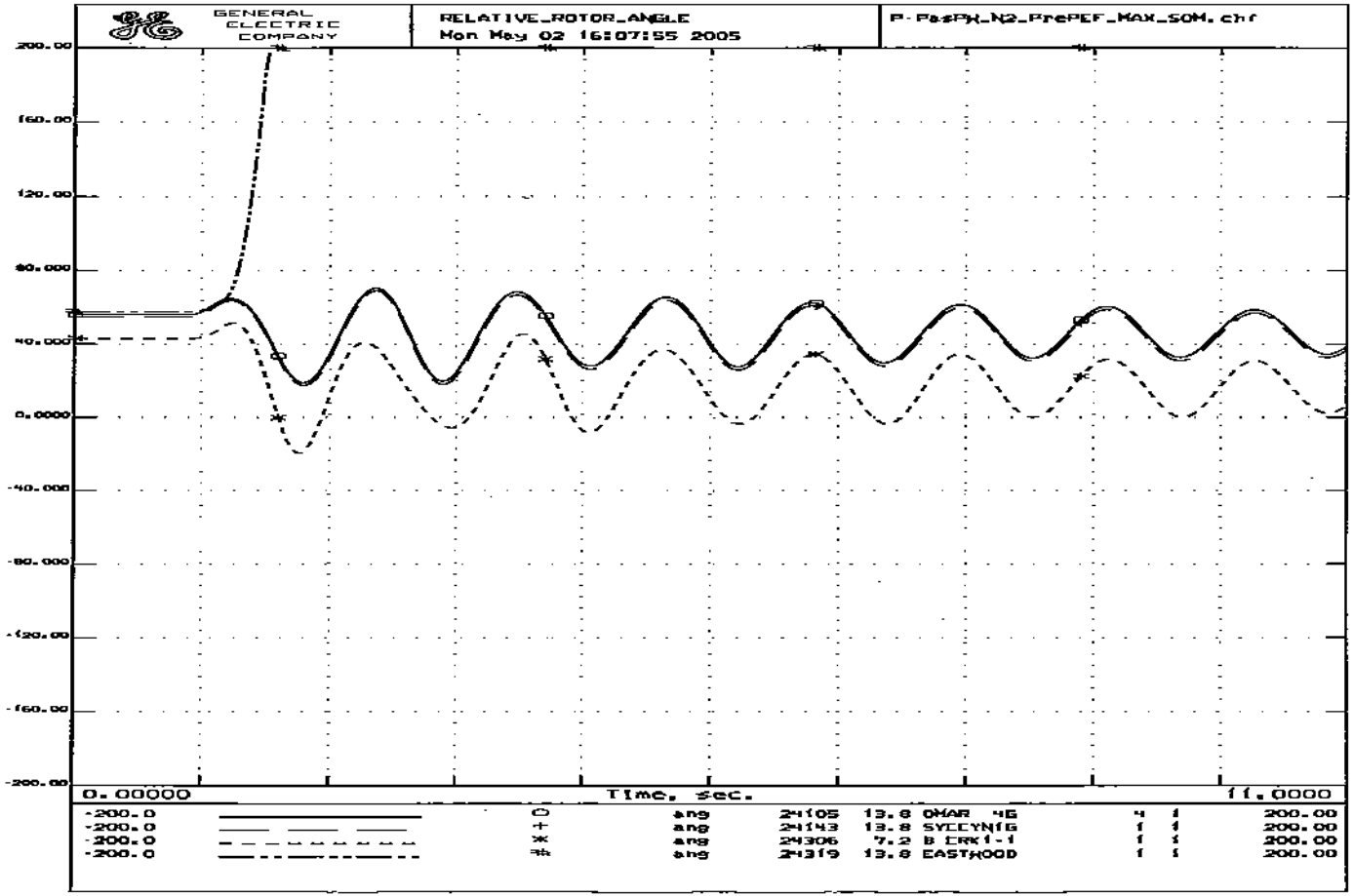
GENERAL ELECTRIC COMPANY
RELATIVE_ROTOR_ANGLE
Mon May 02 16:07:55 2005
P-PasPX_N2_PrePEF_MAX_SOM.chf
200.00
160.00
120.00
80.000
40.000
0.0000
-40.000
-80.000
-120.00
-160.00
-200.00
0.00000
Time, sec.
11.0000
-200.0 ○ ang 24105 13.8 OMAR 4G 4 1 200.00
-200.0 + ang 24143 13.8 SYCCYNIG 1 1 200.00
-200.0 * ang 24306 7.2 B ERK1-1 1 1 200.00
-200.0 # ang 24319 13.8 EASTWOOD 1 1 200.00

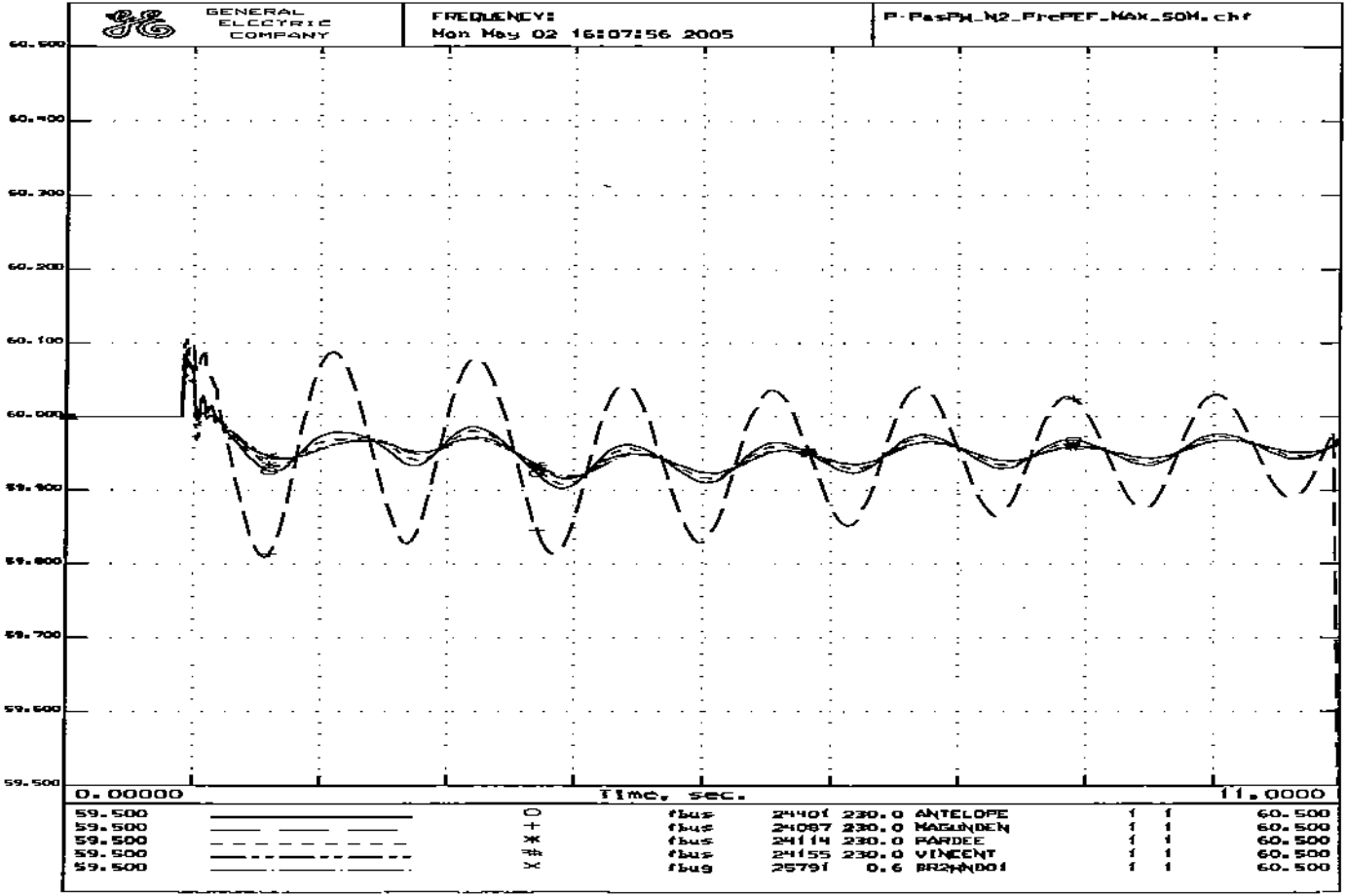
GENERAL ELECTRIC COMPANY
FREQUENCY:
Mon May 02 16:07:56 2005
P-PasPW_N2_FrcPEF_MAX_SOM.chf
60.500
60.400
60.300
60.200
60.100
60.000
59.900
59.800
59.700
59.600
59.500
0.00000
time, sec.
11.0000
59.500 ○ fbus 24401 230.0 ANTELOPE 1 1 60.500
59.500 + fbus 24087 230.0 MAGUNDEN 1 1 60.500
59.500 ✱ fbus 24114 230.0 PARDEE 1 1 60.500
59.500 # fbus 24155 230.0 VINCENT 1 1 60.500
59.500 × fbus 25791 0.6 BR2WND01 1 1 60.500

```
PrePEF_MAX_SOM.sav
PrePEF.dyd
TITLE
Calpine Pastoria Addition Stability Study: Loss of Two 230-KV Lines
6-CYCLE 1-Phase Fault at Vincent 230kV Bus
N-2 OUTAGE: Vincent-Antelope No.1 and No.2 230kV Lines
SYSTEM STABILITY CASE - V-A_N2_PrePEF_MAX_SOM.swt
PrePEF_MAX_SOM.sav + PrePEF.dyd + V-A_N3_PrePEF_MAX_SOM.swt
RUN 10.0
CC
CC   ***Calpine Pastoria Addition DYNAMIC STABILITY ASSESSMENT***
CC   APPLY A 1-PHASE-TO-GROUND FAULT ON THE VINCENT 230-KV BUS
FB   0.0 "VINCENT " 230  0.00068 0.00999
CC
CC   CLEAR FAULT IN 6 CYCLES
CFB  6.0 "VINCENT " 230
CC
CC   REMOVE VINCENT-ANTELOPE NO.1 230-KV LINE
DL   6.0 "VINCENT " 230. "ANTELOPE" 230. "1 "
CC
CC   REMOVE VINCENT-ANTELOPE NO.2 230-KV LINE
DL   6.0 "ANTELOPE" 230. "VINCENT " 230. "2 "
CC
CC   IMPLEMENT PEF SPECIAL PROTECTION SCHEME FOR N-2
TG   12.0 "PSTRIAS1" 18.00 "S1"
TG   12.0 "PSTRIAG1" 18.00 "G1"
TG   12.0 "PSTRIAG2" 18.00 "G2"
TG   12.0 "PSTRIAS2" 18.00 "S2"
TG   12.0 "PSTRIAG3" 18.00 "G3"
CC
CC   INITIATE SEL-68 STABILITY TRIP
TG   18.0 "MAMOTH1G" 13.80 "1 "
TG   18.0 "MAMOTH2G" 13.80 "2 "
TG   18.0 "EASTWOOD" 13.80 "1 "
```

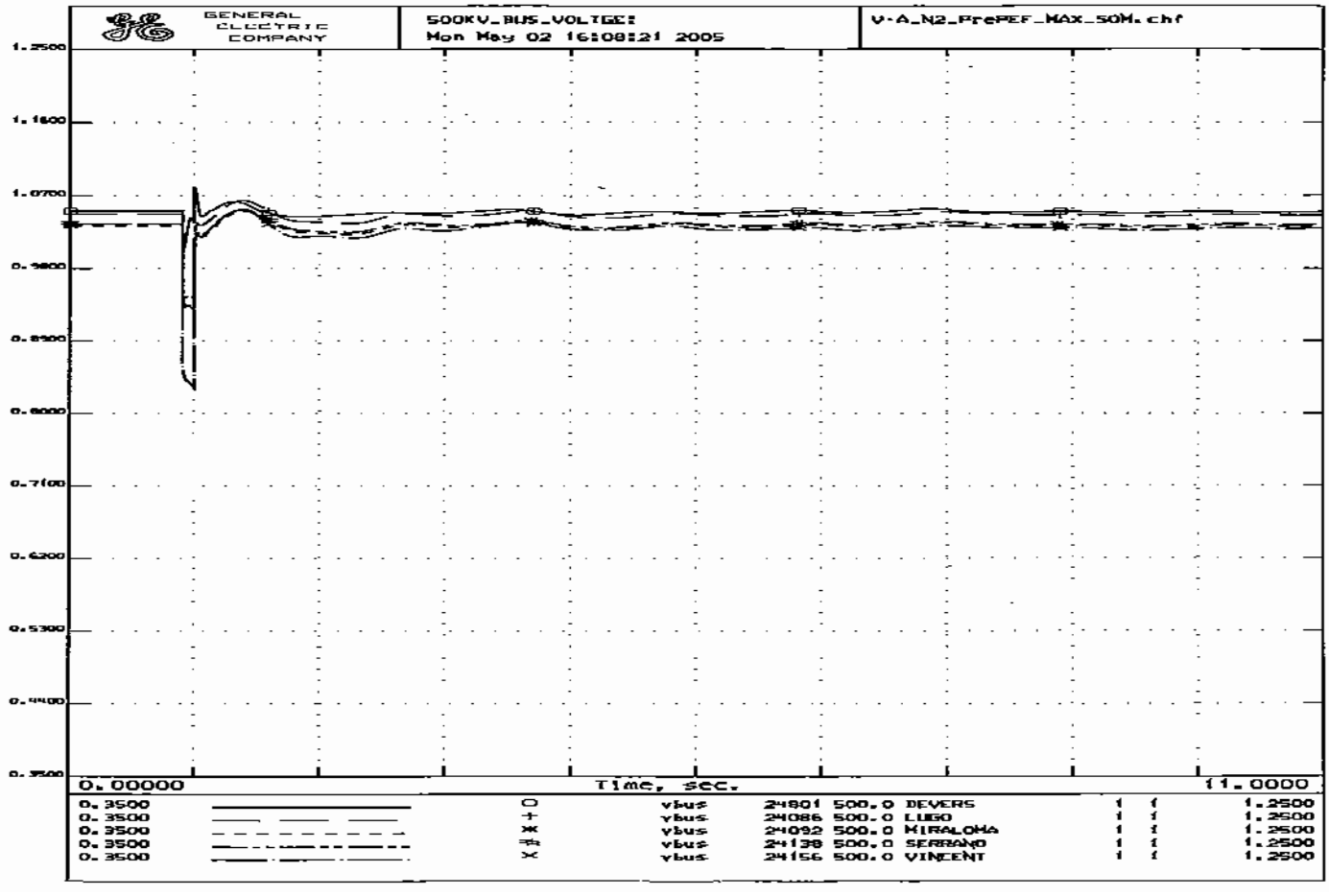
GENERAL ELECTRIC COMPANY
500KV_BUS_VOLTGE!
Mon May 02 16:08:21 2005
V-A_N2_PrePEF_MAX_50M.chf
1.2500
1.1600
1.0700
0.9800
0.8900
0.8000
0.7100
0.6200
0.5300
0.4400
0.3500
0.00000
Time, sec.
11.0000
0.3500 ○ vbus 24801 500.0 DEVERS 1 1 1.2500
0.3500 + vbus 24086 500.0 LUGO 1 1 1.2500
0.3500 ✱ vbus 24092 500.0 MIRALOMA 1 1 1.2500
0.3500 ⧺ vbus 24138 500.0 SERRANO 1 1 1.2500
0.3500 × vbus 24156 500.0 VINCENT 1 1 1.2500

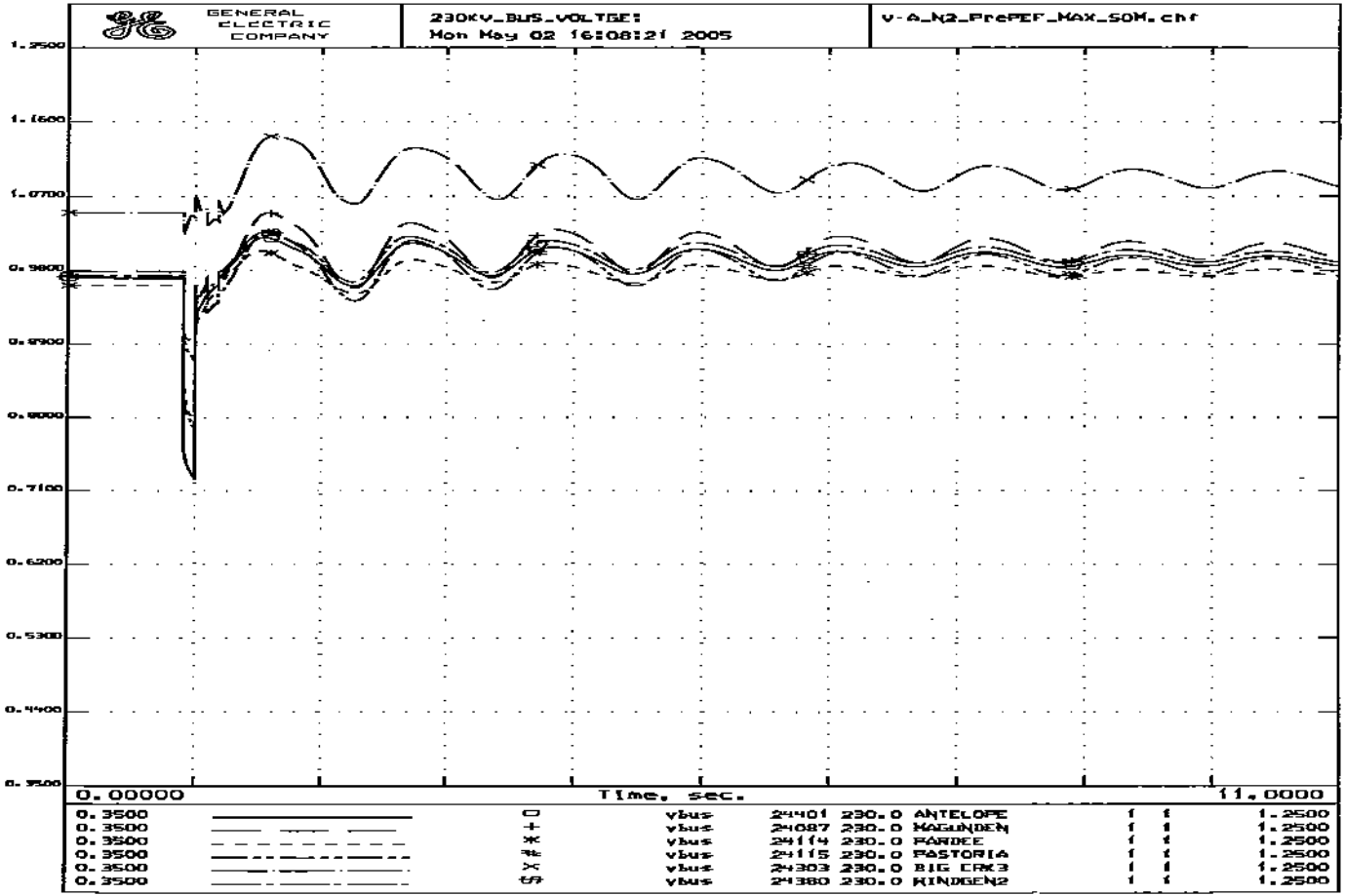
GENERAL ELECTRIC COMPANY
230KV_BUS_VOLTGE:
Mon May 02 16:08:21 2005
V-A_N2_PrePEF_MAX_50M.chf
1.2500
1.1600
1.0700
0.9800
0.8900
0.8000
0.7100
0.6200
0.5300
0.4400
0.3500
0.00000
Time, sec.
11.0000
0.3500 □ vbus 24401 230.0 ANTELOPE 1 1 1.2500
0.3500 + vbus 24087 230.0 MAGUNDEN 1 1 1.2500
0.3500 * vbus 24114 230.0 PARDEE 1 1 1.2500
0.3500 vbus 24115 230.0 PASTORIA 1 1 1.2500
0.3500 vbus 24303 230.0 BIG CRK3 1 1 1.2500
0.3500 vbus 24380 230.0 MINDGEN2 1 1 1.2500

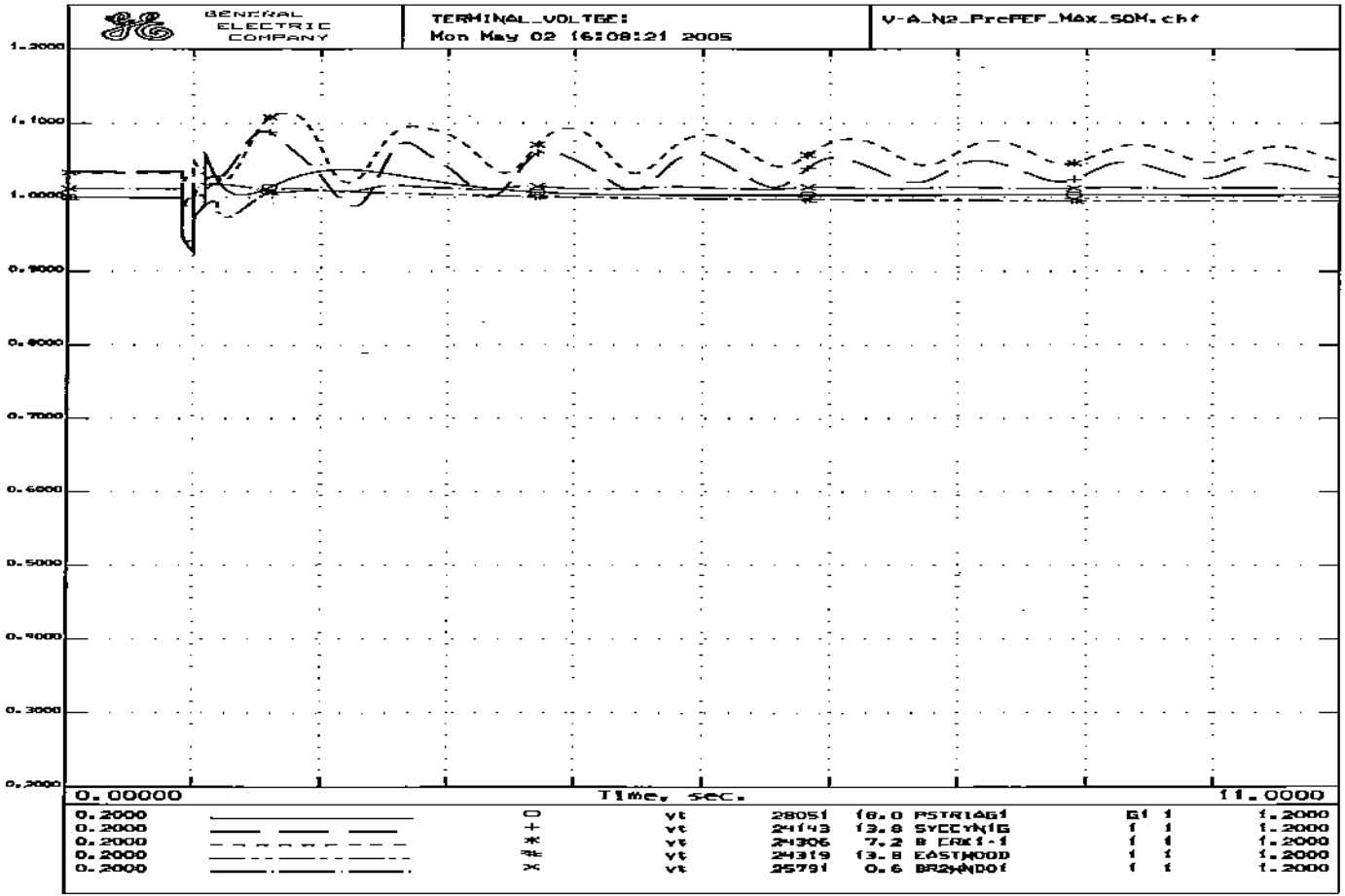
GENERAL ELECTRIC COMPANY
TERMINAL_VOLTGE:
Mon May 02 16:08:21 2005
V-A_N2_PrcPEF_MAX_SOM.chf
1.2000
1.1000
1.0000
0.9000
0.8000
0.7000
0.6000
0.5000
0.4000
0.3000
0.2000
0.00000
Time, sec.
11.0000
0.2000 ○ vt 28051 16.0 PSTRIAG1 G1 1 1.2000
0.2000 + vt 24143 13.8 SYCCYNIG 1 1 1.2000
0.2000 * vt 24306 7.2 B CRK1-1 1 1 1.2000
0.2000 # vt 24319 13.8 EASTWOOD 1 1 1.2000
0.2000 × vt 25791 0.6 BR2WNDOF 1 1 1.2000

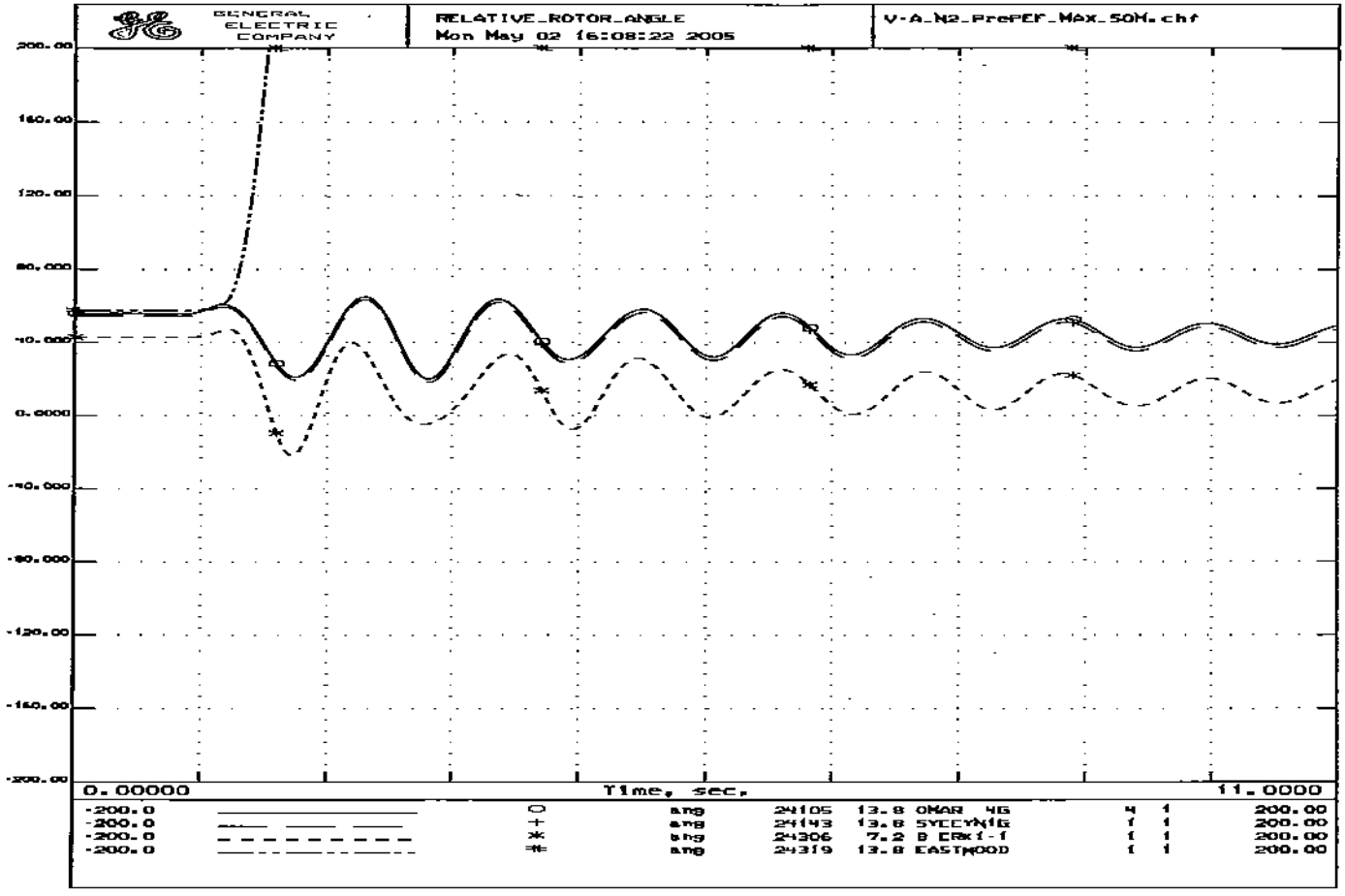
GENERAL ELECTRIC COMPANY
RELATIVE_ROTOR_ANGLE
Mon May 02 16:08:22 2005
V-A_N2_PrePEF_MAX_50M.chf
200.00
160.00
120.00
80.000
40.000
0.0000
-40.000
-80.000
-120.00
-160.00
-200.00
0.00000
Time, sec.
11.0000
-200.0 ang 24105 13.8 OMAR 4G 4 1 200.00
-200.0 ang 24143 13.8 SYCEYN1G 1 1 200.00
-200.0 ang 24306 7.2 B ERK1-1 1 1 200.00
-200.0 ang 24319 13.8 EASTWOOD 1 1 200.00

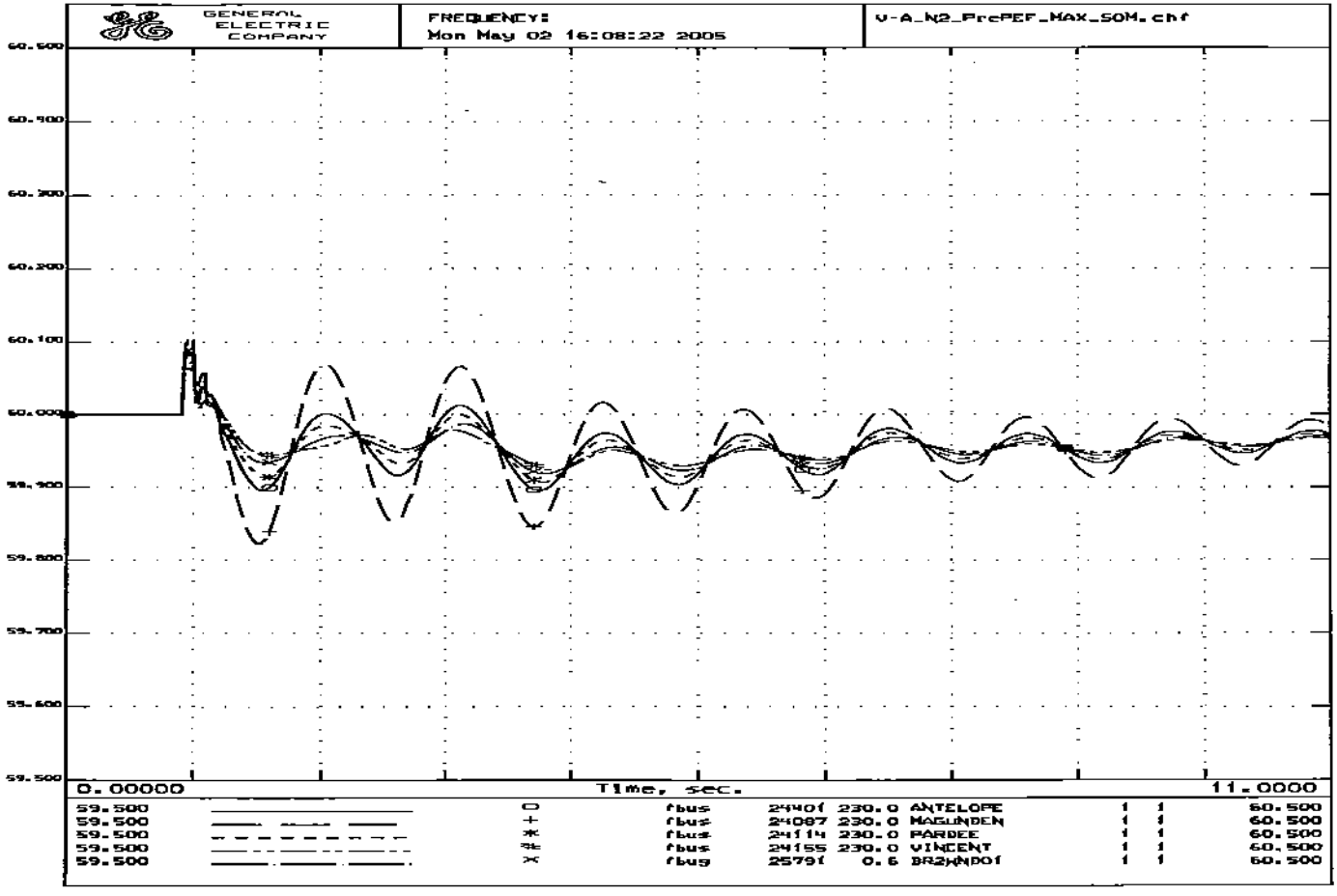
GENERAL ELECTRIC COMPANY
FREQUENCY:
Mon May 02 16:08:22 2005
V-A_N2_PrePEF_MAX_SOM.chf
60.500
60.400
60.300
60.200
60.100
60.000
59.900
59.800
59.700
59.600
59.500
0.00000
Time, sec.
11.0000
59.500 ○ fbus 24401 230.0 ANTELOPE 1 1 60.500
59.500 + fbus 24087 230.0 MAGUNDEN 1 1 60.500
59.500 * fbus 24114 230.0 PARDEE 1 1 60.500
59.500 # fbus 24155 230.0 VINCENT 1 1 60.500
59.500 × fbus 25791 0.6 BR2WNDOI 1 1 60.500

APPENDIX G

STABILITY STUDIES
N-2

POST-PROJECT

```
PostPEF_MAX_SOM.sav
PostPEF.dyd
TITLE
Calpine Pastoria Addition Stability Study: Loss of Two 230-kV Lines
6-CYCLE 1-Phase Fault at Antelope 230kV Bus
N-2 OUTAGE: Magunden-Antelope No.1 and Antelope-Windgen2 230kV Lines
SYSTEM STABILITY CASE -.PEF.swt
PostPEF_MAX_SOM.sav + PostPEF.dyd + PostPEF_MAX_SOM_N2.swt
RUN 10.0
CC
CC   ***CALPINE PASTORIA ADDITION DYNAMIC STABILITY ASSESSMENT***
CC   APPLY A 1-PHASE-TO-GROUND FAULT ON THE ANTELOPE 230-KV BUS
FB   0.0 "ANTELOPE" 230  0.00204 0.02565
CC
CC   CLEAR FAULT IN 6 CYCLES
CFB  6.0 "ANTELOPE" 230
CC
CC   REMOVE MAGUNDEN-ANTELOPE NO.1 230-KV LINE
DL   6.0 "MAGUNDEN" 230. "ANTELOPE" 230. "1 "
CC
CC   REMOVE MAGUNDEN-WINDGEN2 230-KV LINE
DL   6.0 "ANTELOPE" 230. "WINDGEN2" 230. "1 "
CC
CC   IMPLEMENT PEF SPECIAL PROTECTION SCHEME FOR N-2
TG   12.0 "PSTRIAS1" 18.00 "S1"
TG   12.0 "PSTRIAG1" 18.00 "G1"
TG   12.0 "PSTRIAG2" 18.00 "G2"
TG   12.0 "PSTRIAS2" 18.00 "S2"
TG   12.0 "PSTRIAG3" 18.00 "G3"
CC
CC   INITIATE SEL-68 STABILITY TRIP
TG   18.0 "MAMOTH1G" 13.80 "1 "
TG   18.0 "MAMOTH2G" 13.80 "2 "
TG   18.0 "EASTWOOD" 13.80 "1 "
```

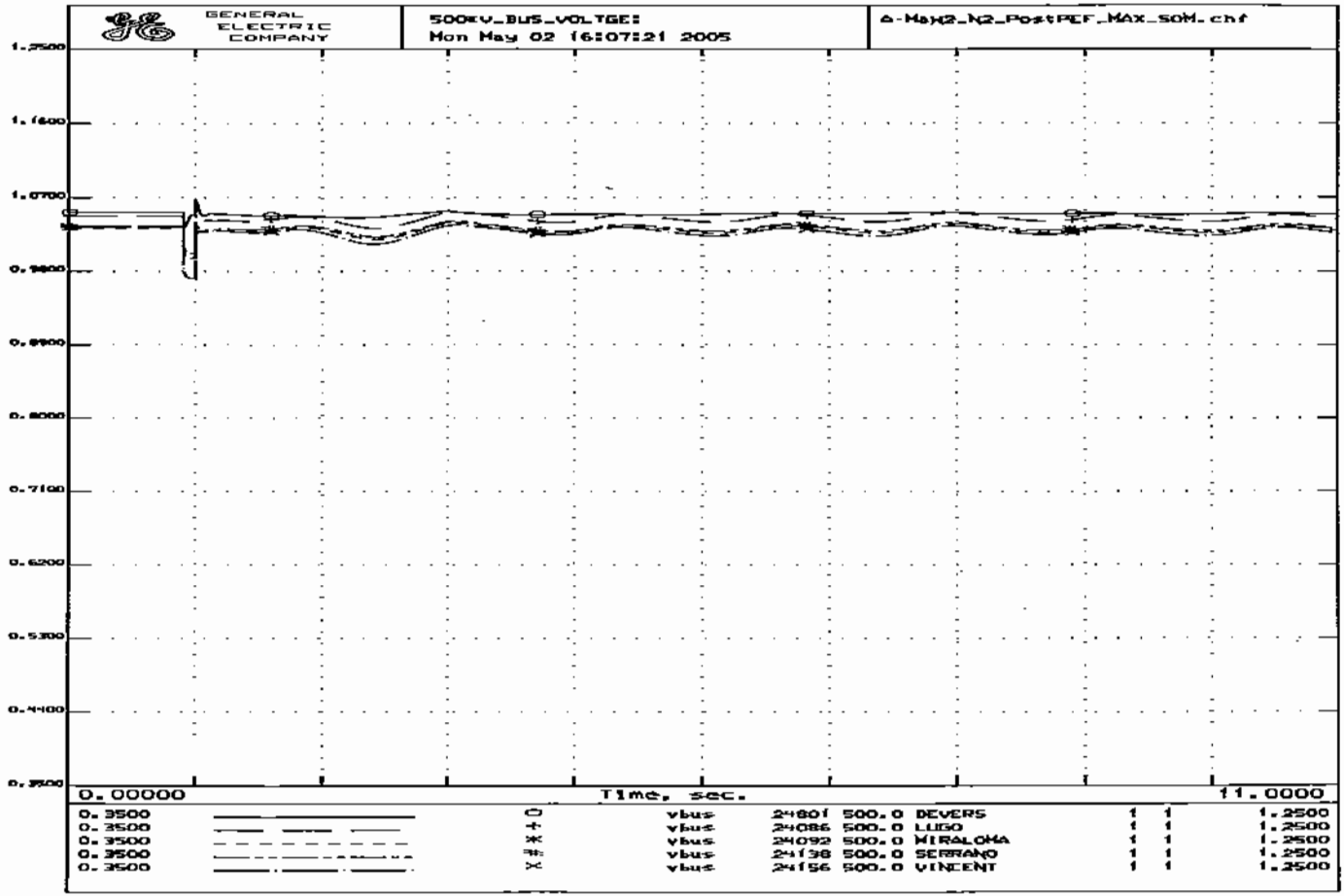
GENERAL ELECTRIC COMPANY
500KV_BUS_VOLTGE:
Mon May 02 16:07:21 2005
A-MaX2_N2_PostPEF_MAX_SOM.chf
1.2500
1.1600
1.0700
0.9800
0.8900
0.8000
0.7100
0.6200
0.5300
0.4400
0.3500
0.00000
Time, sec.
11.0000
0.3500 vbus 24801 500.0 DEVERS 1 1 1.2500
0.3500 vbus 24086 500.0 LUGO 1 1 1.2500
0.3500 vbus 24092 500.0 MIRALOMA 1 1 1.2500
0.3500 vbus 24138 500.0 SERRANO 1 1 1.2500
0.3500 vbus 24156 500.0 VINCENT 1 1 1.2500

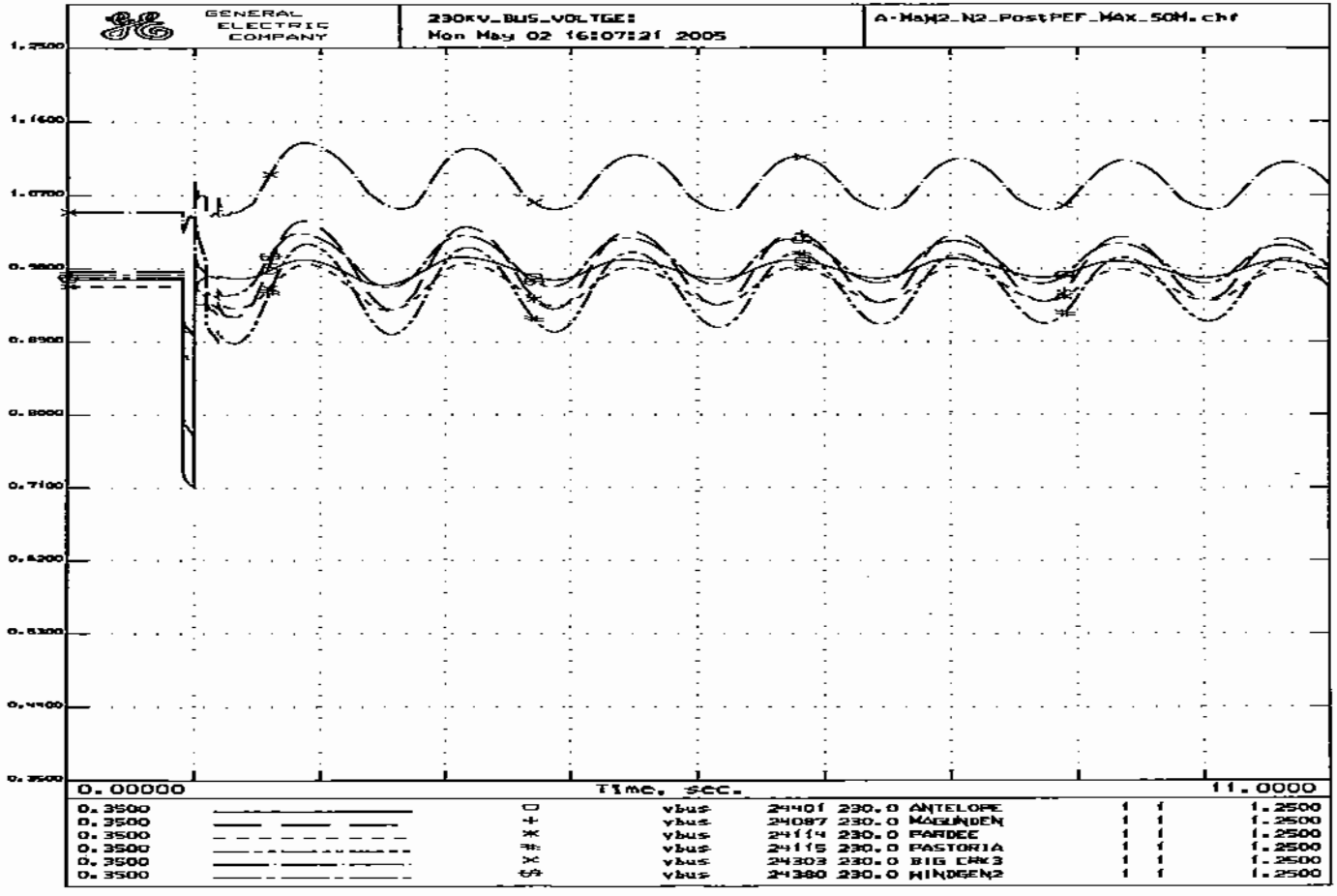
GENERAL ELECTRIC COMPANY
230KV_BUS_VOLTGE:
Mon May 02 16:07:21 2005
A-MAM2_N2_PostPEF_MAX_50M.chf
1.2500
1.1600
1.0700
0.9800
0.8900
0.8000
0.7100
0.6200
0.5300
0.4400
0.3500
0.00000
Time, sec.
11.0000
0.3500 vbus 24401 230.0 ANTELOPE 1 1 1.2500
0.3500 vbus 24087 230.0 MAGUNDEN 1 1 1.2500
0.3500 vbus 24114 230.0 FARDEE 1 1 1.2500
0.3500 vbus 24115 230.0 PASTORIA 1 1 1.2500
0.3500 vbus 24303 230.0 BIG CRK3 1 1 1.2500
0.3500 vbus 24380 230.0 WINDGEN2 1 1 1.2500

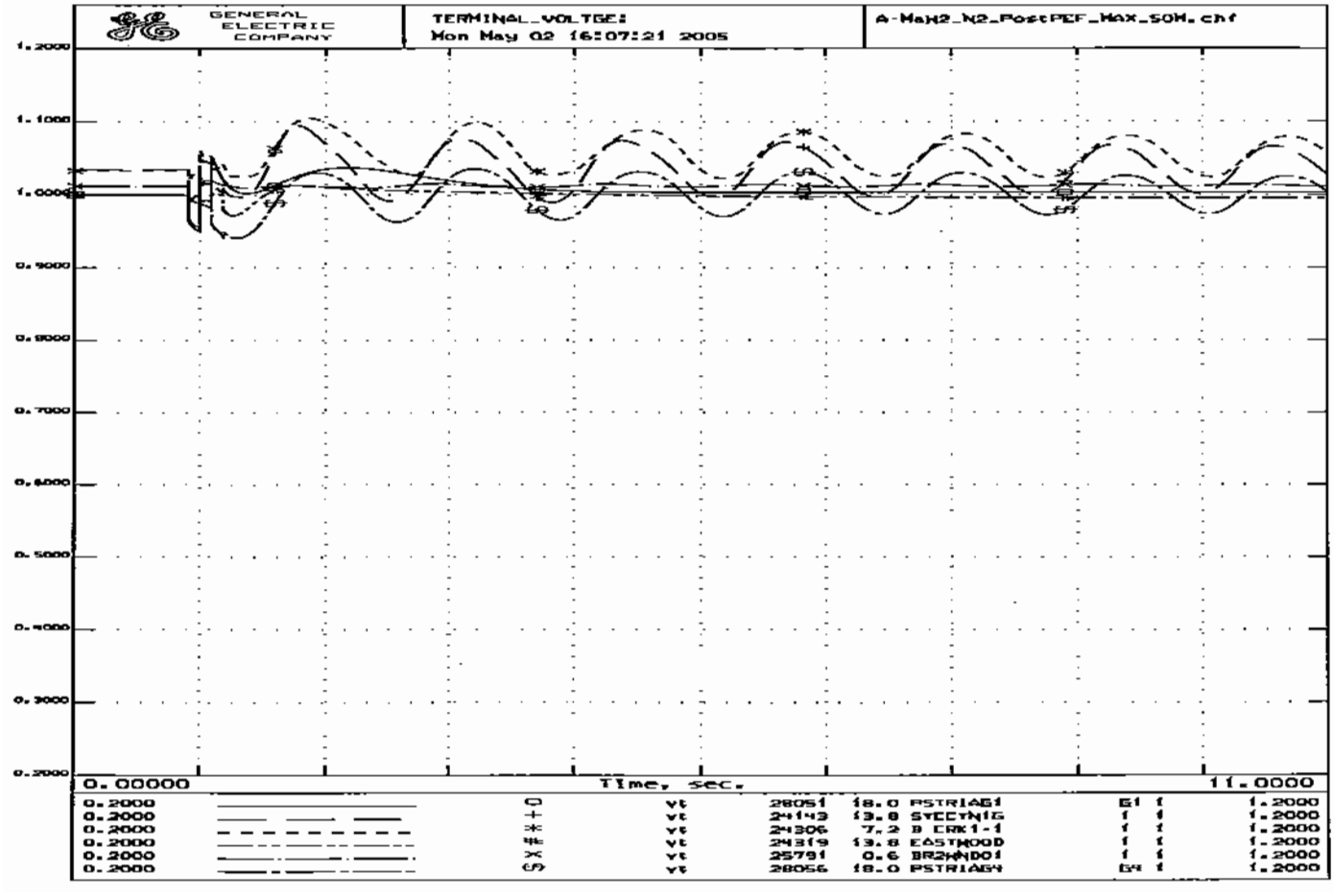
GENERAL ELECTRIC COMPANY
TERMINAL_VOLTGE:
Mon May 02 16:07:21 2005
A-MaH2_N2_PostPEF_MAX_SOH.chf
1.2000
1.1000
1.0000
0.9000
0.8000
0.7000
0.6000
0.5000
0.4000
0.3000
0.2000
0.00000
Time, sec.
11.0000
0.2000 ○ vt 28051 18.0 PSTRIAG1 G1 1 1.2000
0.2000 + vt 24143 13.8 SYCCTNIG 1 1 1.2000
0.2000 * vt 24306 7.2 B CRK1-1 1 1 1.2000
0.2000 vt 24319 13.8 EASTWOOD 1 1 1.2000
0.2000 × vt 25791 0.6 BR2HNDO1 1 1 1.2000
0.2000 vt 28056 18.0 PSTRIAG4 G4 1 1.2000

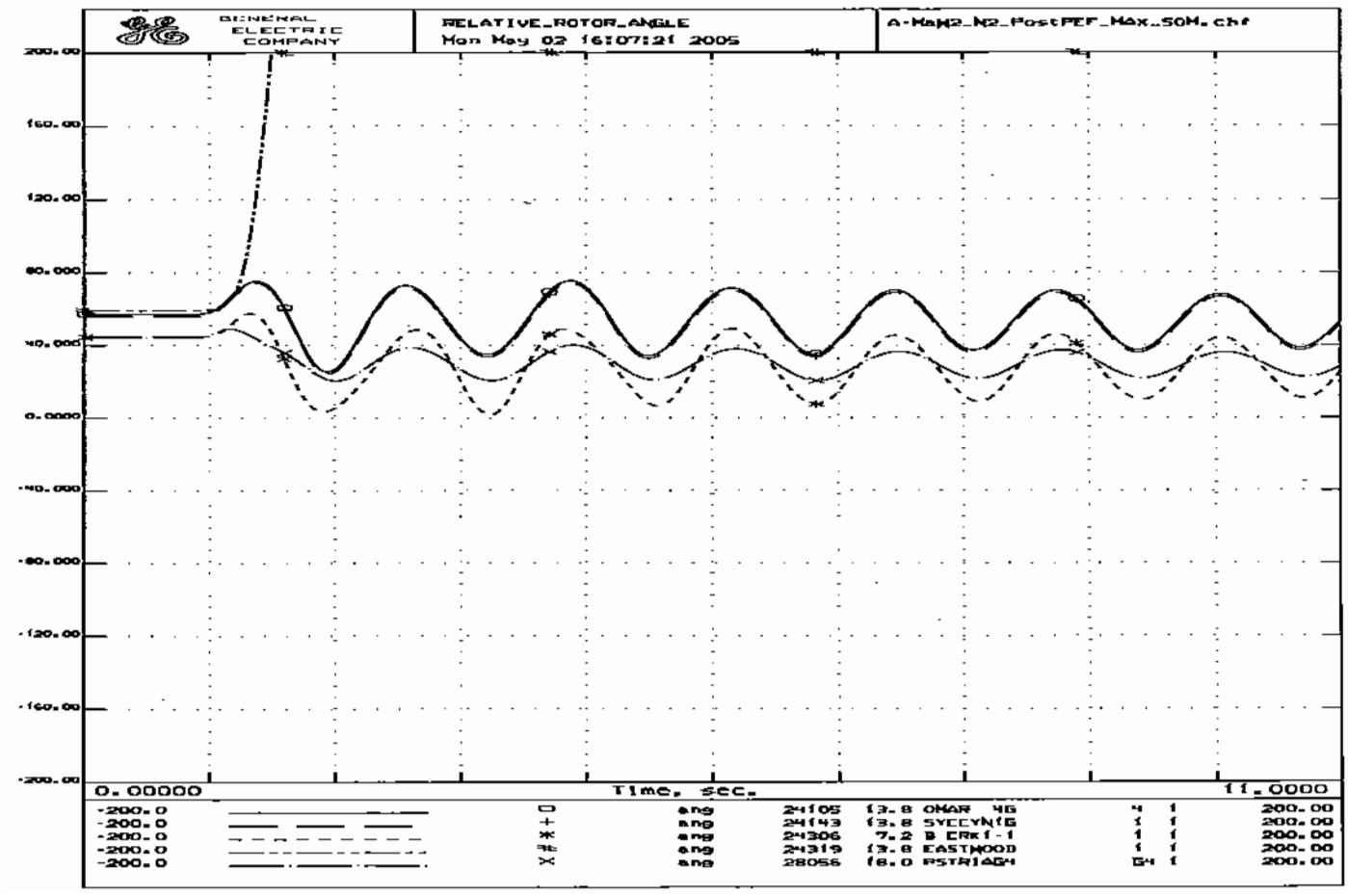
GENERAL ELECTRIC COMPANY
RELATIVE_ROTOR_ANGLE
Mon May 02 16:07:21 2005
A-MAN2_N2_PostPEF_MAX_50M.chf
200.00
160.00
120.00
80.000
40.000
0.0000
-40.000
-80.000
-120.00
-160.00
-200.00
0.00000
Time, sec.
11.0000
-200.0 □ ang 24105 13.8 OMAR 4G 4 1 200.00
-200.0 + ang 24143 13.8 SYCCYN1G 1 1 200.00
-200.0 * ang 24306 7.2 B ERK1-1 1 1 200.00
-200.0 ± ang 24319 13.8 EASTWOOD 1 1 200.00
-200.0 × ang 28056 16.0 ASTRIAG4 G4 1 200.00

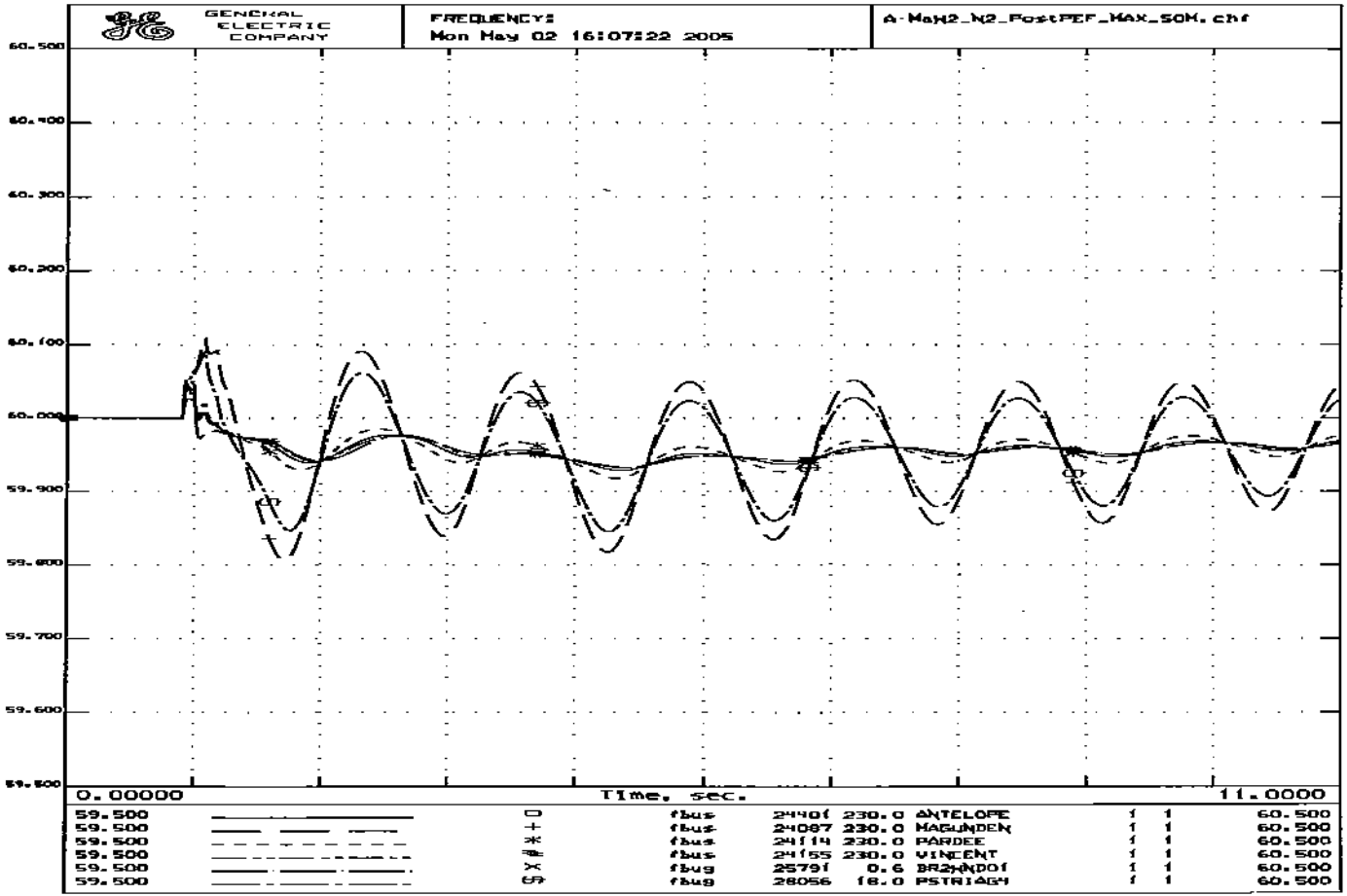
GENERAL ELECTRIC COMPANY
FREQUENCY:
Mon May 02 16:07:22 2005
A-MaH2_N2_PostPEF_MAX_50M.chf
60.500
60.400
60.300
60.200
60.100
60.000
59.900
59.800
59.700
59.600
59.500
0.00000
Time, sec.
11.0000
59.500 □ fbus 24401 230.0 ANTELOPE 1 1 60.500
59.500 + fbus 24087 230.0 MAGUNDEN 1 1 60.500
59.500 * fbus 24114 230.0 PARDEE 1 1 60.500
59.500 # fbus 24155 230.0 VINCENT 1 1 60.500
59.500 X fbug 25791 0.6 BRANDOI 1 1 60.500
59.500 fbug 28056 18.0 PSTRIAGH 1 1 60.500

```
PostPEF_MAX_SOM.sav
PostPEF.dyd
TITLE
Calpine Pastoria Addition Stability Study: Loss of Two 230-kV Lines
G-CYCLE 1-Phase Fault at Antelope 230kV Bus
N-2 OUTAGE: Mesa-Antelope 230kV Line
SYSTEM STABILITY CASE - PEF.swt
PostPEF_MAX_SOM.sav + PostPEF.dyd + PEF.swt
RUN 10.0
CC
CC   ***Calpine Pastoria Addition DYNAMIC STABILITY ASSESSMENT***
CC   APPLY A 1-PHASE-TO-GROUND FAULT ON THE ANTELOPE 230-KV BUS
FB   0.0 "ANTELOPE" 230  0.00204 0.02565
CC
CC   CLEAR FAULT IN 6 CYCLES
CFB  6.0 "ANTELOPE" 230
CC
CC   REMOVE MESA-ANTELOPE 230-KV LINE
DL   6.0 "MESA CAL" 230. "ANTELOPE" 230. "1 "
CC
CC   REMOVE VINCENT-ANTELOPE 230-KV LINE
DL   6.0 "VINCENT " 230. "ANTELOPE" 230. "1 "
CC
CC   IMPLEMENT PEF SPECIAL PROTECTION SCHEME FOR N-2
TG   12.0 "PSTRIAS1" 18.00 "S1"
TG   12.0 "PSTRIAG1" 18.00 "G1"
TG   12.0 "PSTRIAG2" 18.00 "G2"
TG   12.0 "PSTRIAS2" 18.00 "S2"
TG   12.0 "PSTRIAG3" 18.00 "G3"
CC
CC   INITIATE SEL-68 STABILITY TRIP
TG   18.0 "MAMOTH1G" 13.80 "1 "
TG   18.0 "MAMOTH2G" 13.80 "2 "
TG   18.0 "EASTWOOD" 13.80 "1 "
```

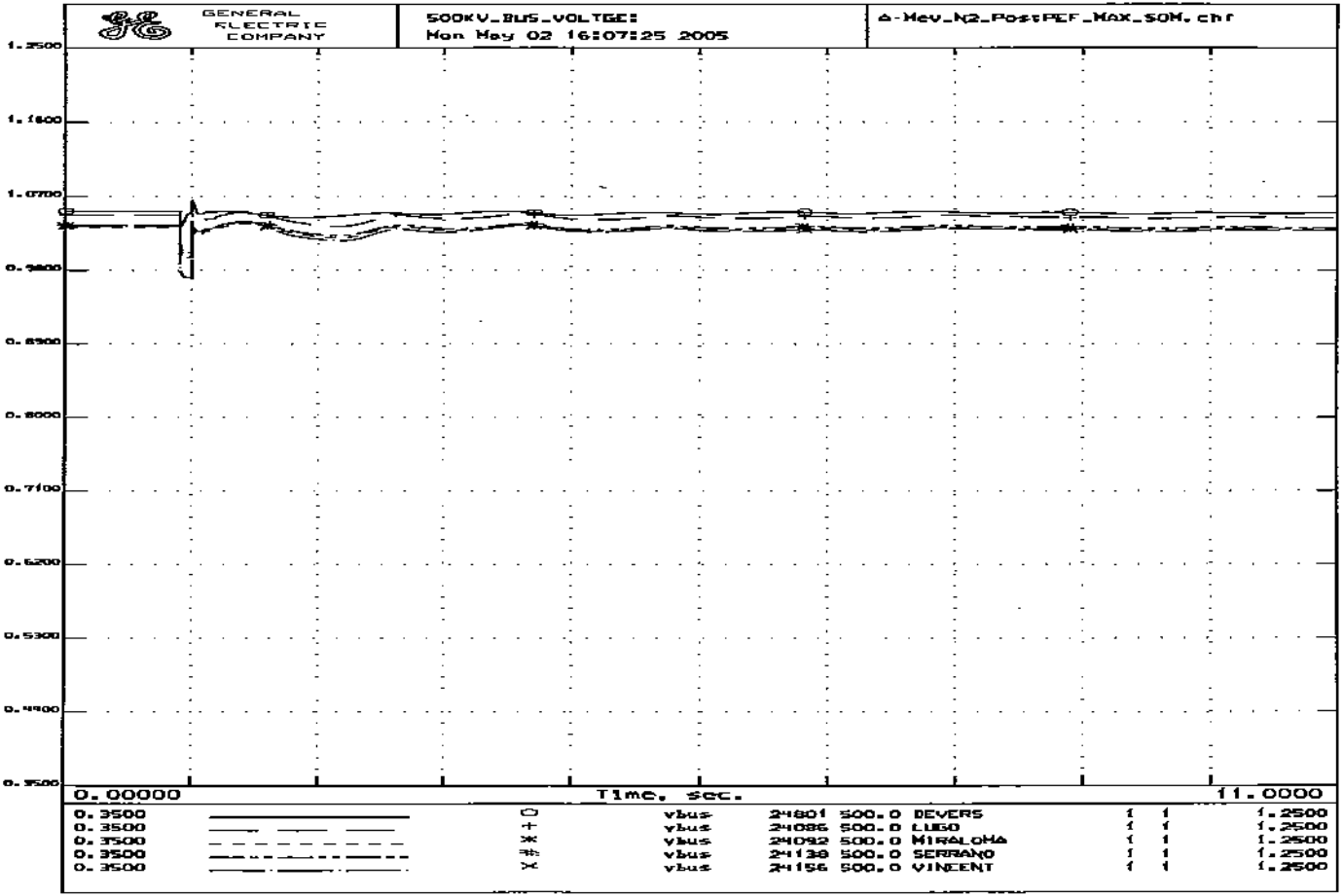
GENERAL ELECTRIC COMPANY
500KV_BUS_VOLTGE:
Mon May 02 16:07:25 2005
Δ-Mev_N2_Post:PEF_MAX_SOM.chf
1.2500
1.1600
1.0700
0.9800
0.8900
0.8000
0.7100
0.6200
0.5300
0.4400
0.3500
0.00000
Time, sec.
11.0000
0.3500 ○ vbus 24801 500.0 DEVERS 1 1 1.2500
0.3500 + vbus 24086 500.0 LUGO 1 1 1.2500
0.3500 * vbus 24092 500.0 MIRALOMA 1 1 1.2500
0.3500 # vbus 24138 500.0 SERRANO 1 1 1.2500
0.3500 x vbus 24156 500.0 VINCENT 1 1 1.2500

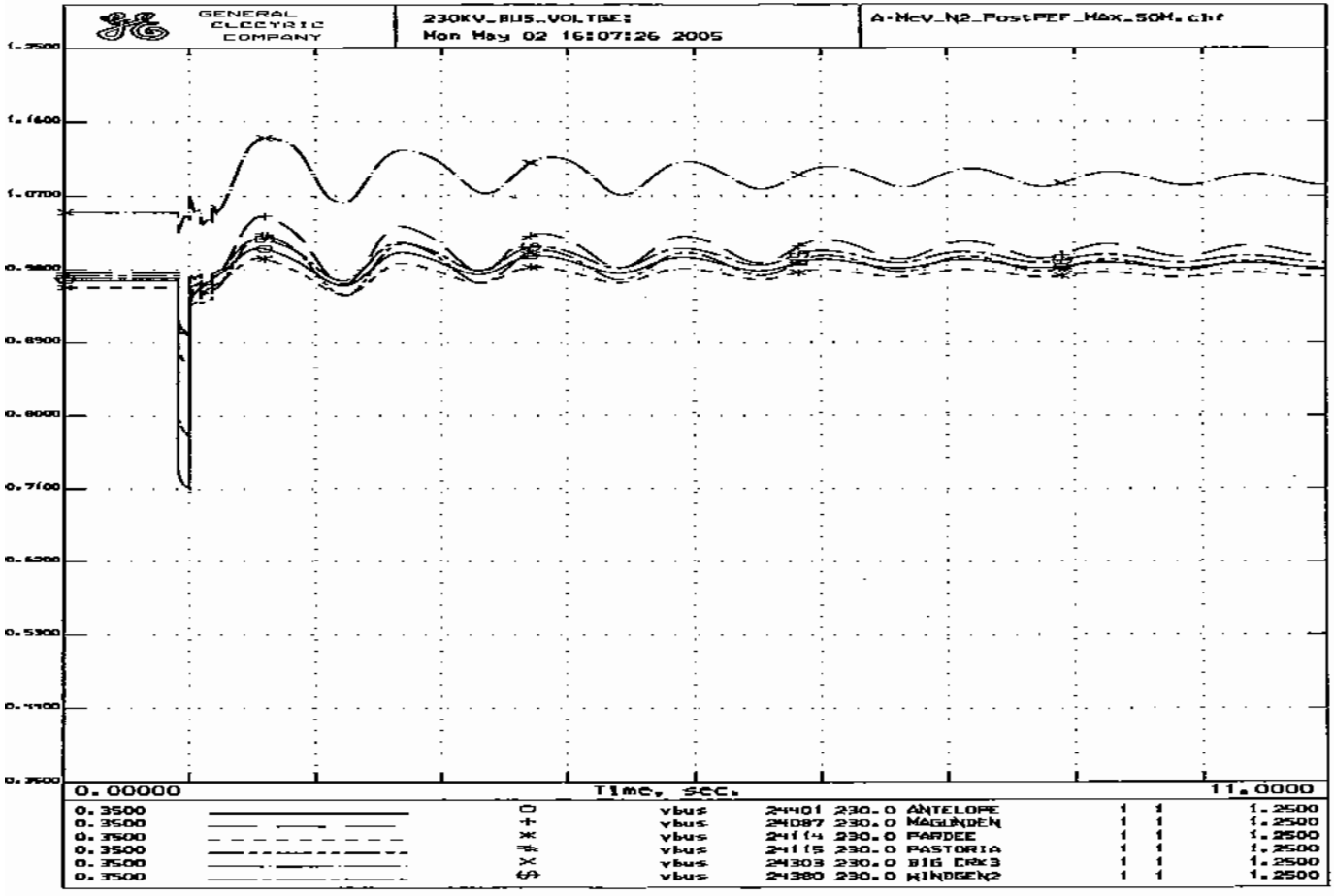
GENERAL ELECTRIC COMPANY
230KV_BUS_VOLTGE:
Mon May 02 16:07:26 2005
A-McV_N2_PostPEF_Max_50M.chf
1.2500
1.1600
1.0700
0.9800
0.8900
0.8000
0.7100
0.6200
0.5300
0.4400
0.3500
0.00000
Time, sec.
11.0000
0.3500 vbus 24401 230.0 ANTELOPE 1 1 1.2500
0.3500 vbus 24087 230.0 MAGUNDEN 1 1 1.2500
0.3500 vbus 24114 230.0 FARDEE 1 1 1.2500
0.3500 vbus 24115 230.0 PASTORIA 1 1 1.2500
0.3500 vbus 24303 230.0 BIG CRK3 1 1 1.2500
0.3500 vbus 24380 230.0 WINDGEN2 1 1 1.2500

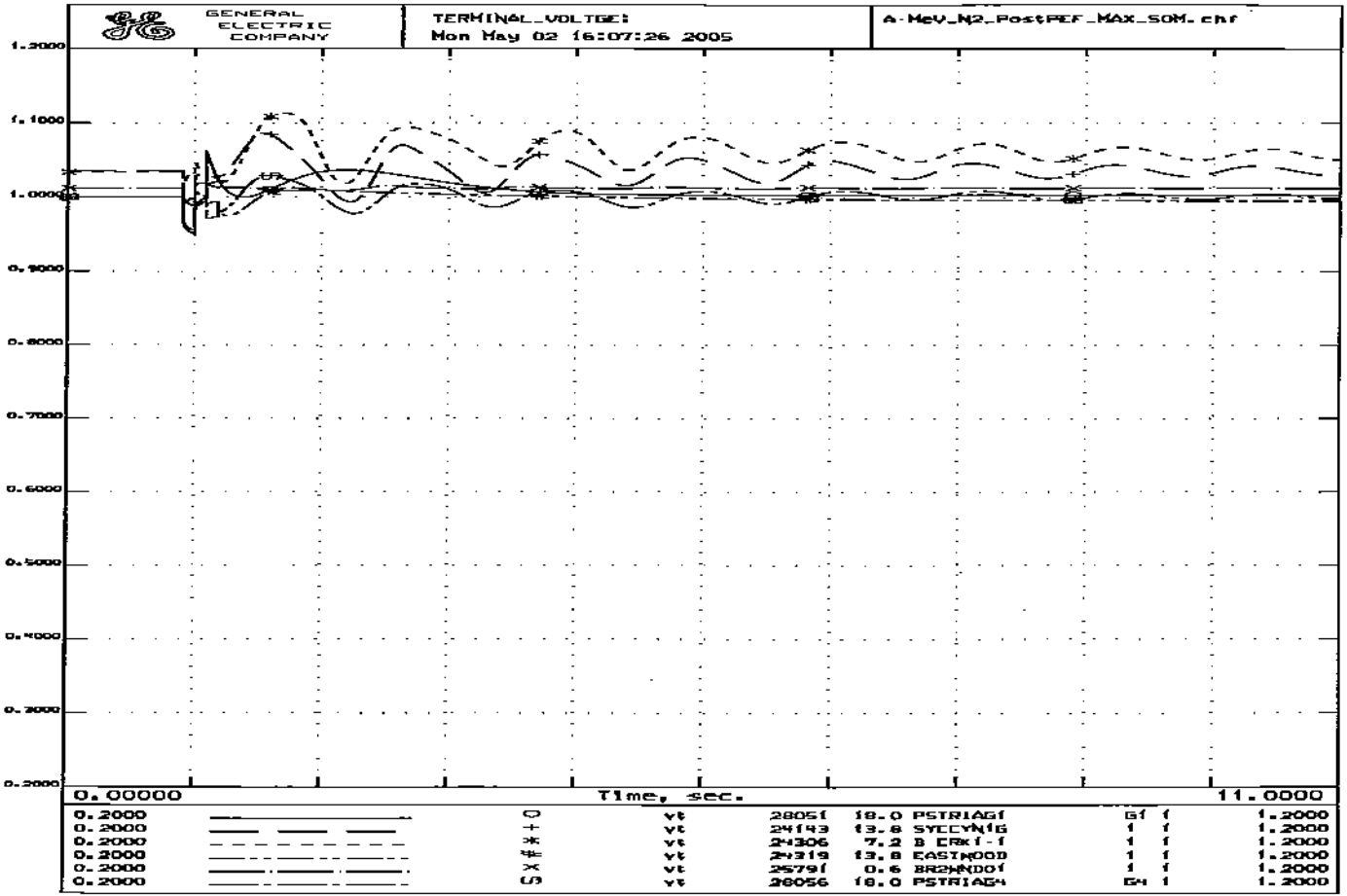
GENERAL ELECTRIC COMPANY
TERMINAL_VOLTGE:
Mon May 02 16:07:26 2005
A-MeV_N2_PostPEF_MAX_SOM.chf
1.2000
1.1000
1.0000
0.9000
0.8000
0.7000
0.6000
0.5000
0.4000
0.3000
0.2000
0.00000
Time, sec.
11.0000
0.2000 ○ vt 28051 18.0 PSTRIAG1 G1 1 1.2000
0.2000 + vt 24143 13.8 SYCCYN1G 1 1 1.2000
0.2000 * vt 24306 7.2 B ERK1-1 1 1 1.2000
0.2000 # vt 24319 13.8 EASTWOOD 1 1 1.2000
0.2000 × vt 25791 0.6 BR2WNDO1 1 1 1.2000
0.2000 ◻ vt 28056 18.0 PSTRIAG4 G4 1 1.2000

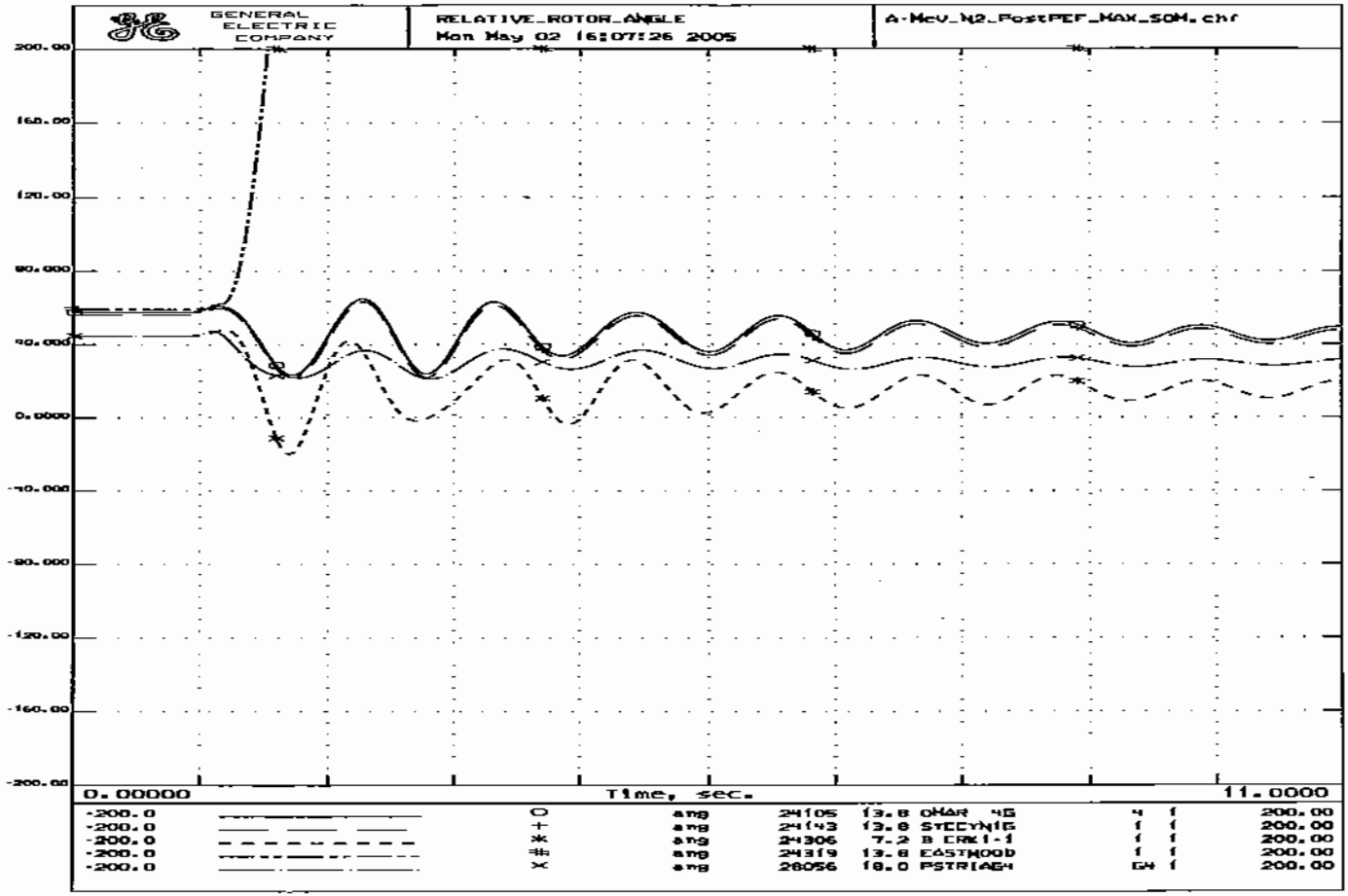
GENERAL ELECTRIC COMPANY
RELATIVE_ROTOR_ANGLE
Mon May 02 16:07:26 2005
A-MCV_N2_PostPEF_MAX_50M.chf
200.00
160.00
120.00
80.000
40.000
0.0000
-40.000
-80.000
-120.00
-160.00
-200.00
0.00000
Time, sec.
11.0000
-200.0 ang 24105 13.8 OMAR 4G 4 1 200.00
-200.0 ang 24143 13.8 STECYNIG 1 1 200.00
-200.0 ang 24306 7.2 B ERK1-1 1 1 200.00
-200.0 ang 24319 13.8 EASTWOOD 1 1 200.00
-200.0 ang 26056 18.0 PSTRIAGH G4 1 200.00

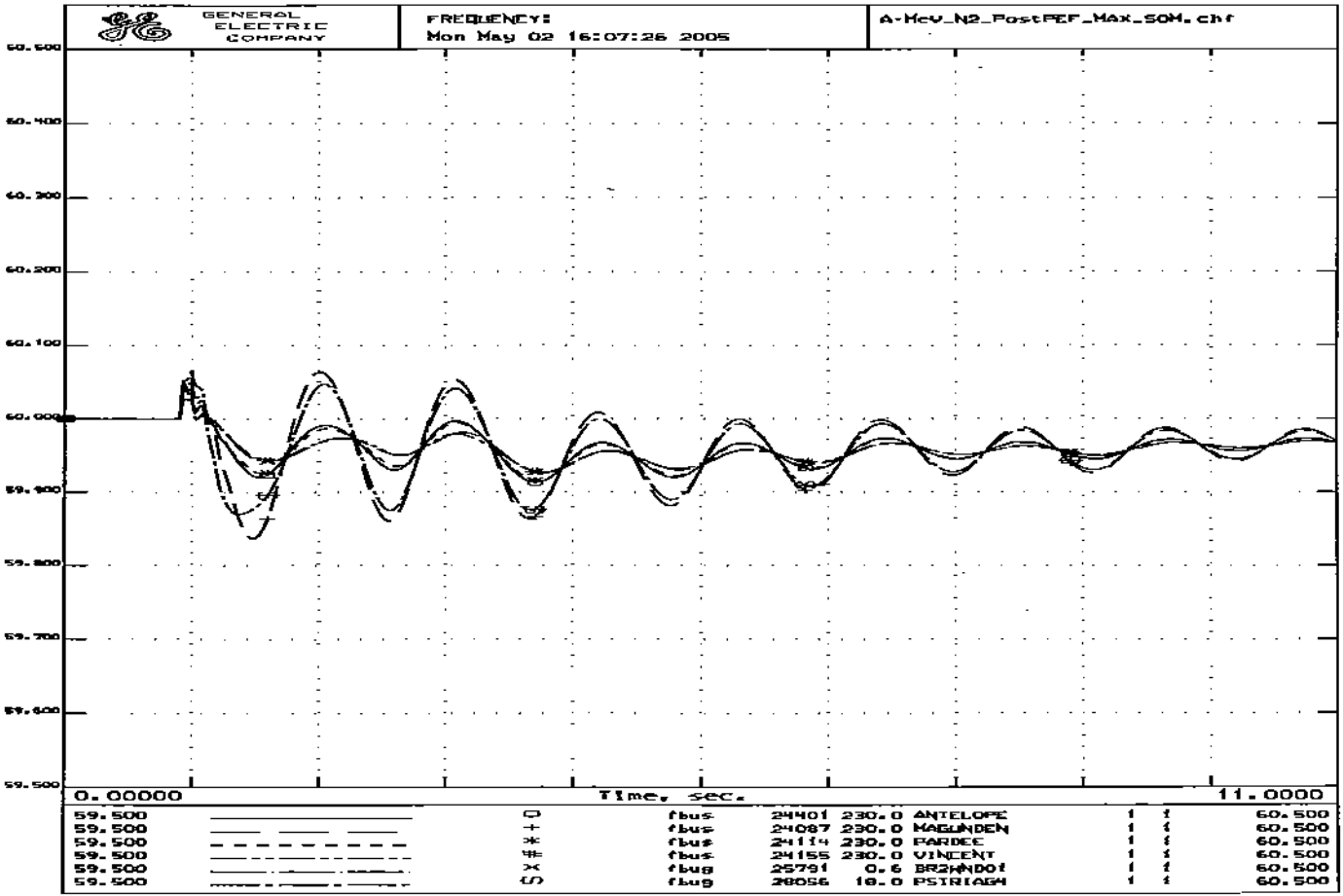
GENERAL ELECTRIC COMPANY
FREQUENCY:
Mon May 02 16:07:26 2005
A-McV_N2_PostPEF_MAX_SOM.chf
60.500
60.400
60.300
60.200
60.100
60.000
59.900
59.800
59.700
59.600
59.500
0.00000
Time, sec.
11.0000
59.500 fbus 24401 230.0 ANTELOPE 1 1 60.500
59.500 fbus 24087 230.0 MAGUNDEN 1 1 60.500
59.500 fbus 24114 230.0 PARDEE 1 1 60.500
59.500 fbus 24155 230.0 VINCENT 1 1 60.500
59.500 fbus 25791 0.6 BR2WNDO1 1 1 60.500
59.500 fbus 28056 18.0 PSTRIAGW 1 1 60.500

```
PostPEF_MAX_SOM.sav
PostPEF.dyd
TITLE
Calpine Pastoria Addition Stability Study: Loss of Two 230-KV Lines
6-CYCLE 1-Phase Fault at Antelope 230kV Bus
N-2 OUTAGE: Vincent-Antelope No.1 and No.2 230kV Lines
SYSTEM STABILITY CASE - A-V_N2_PostPEF_MAX_SOM.swt
PostPEF_MAX_SOM.sav + PostPEF.dyd + A-V_N2_PostPEF_MAX_SOM.swt
RUN 10.0
CC
CC   ***Calpine Pastoria Addition DYNAMIC STABILITY ASSESSMENT***
CC   APPLY A 1-PHASE-TO-GROUND FAULT ON THE ANTELOPE 230-KV BUS
FB   0.0 "ANTELOPE" 230  0.00204 0.02565
CC
CC   CLEAR FAULT IN 6 CYCLES
CFA  6.0 "ANTELOPE" 230
CC
CC   REMOVE VINCENT-ANTELOPE NO.1 230-KV LINE
DL   6.0 "VINCENT " 230. "ANTELOPE" 230. "1 "
CC
CC   REMOVE VINCENT-ANTELOPE NO.2 230-KV LINE
DL   6.0 "ANTELOPE" 230. "VINCENT " 230. "2 "
CC
CC   IMPLEMENT PEF SPECIAL PROTECTION SCHEME FOR N-2
TG   12.0 "PSTRIAS1" 18.00 "S1"
TG   12.0 "PSTRIAG1" 18.00 "G1"
TG   12.0 "PSTRIAG2" 18.00 "G2"
TG   12.0 "PSTRIAS2" 18.00 "S2"
TG   12.0 "PSTRIAG3" 18.00 "G3"
CC
CC   INITIATE SEL-68 STABILITY TRIP
TG   18.0 "MAMOTH1G" 13.80 "1 "
TG   18.0 "MAMOTH2G" 13.80 "2 "
TG   18.0 "EASTWOOD" 13.80 "1 "
```

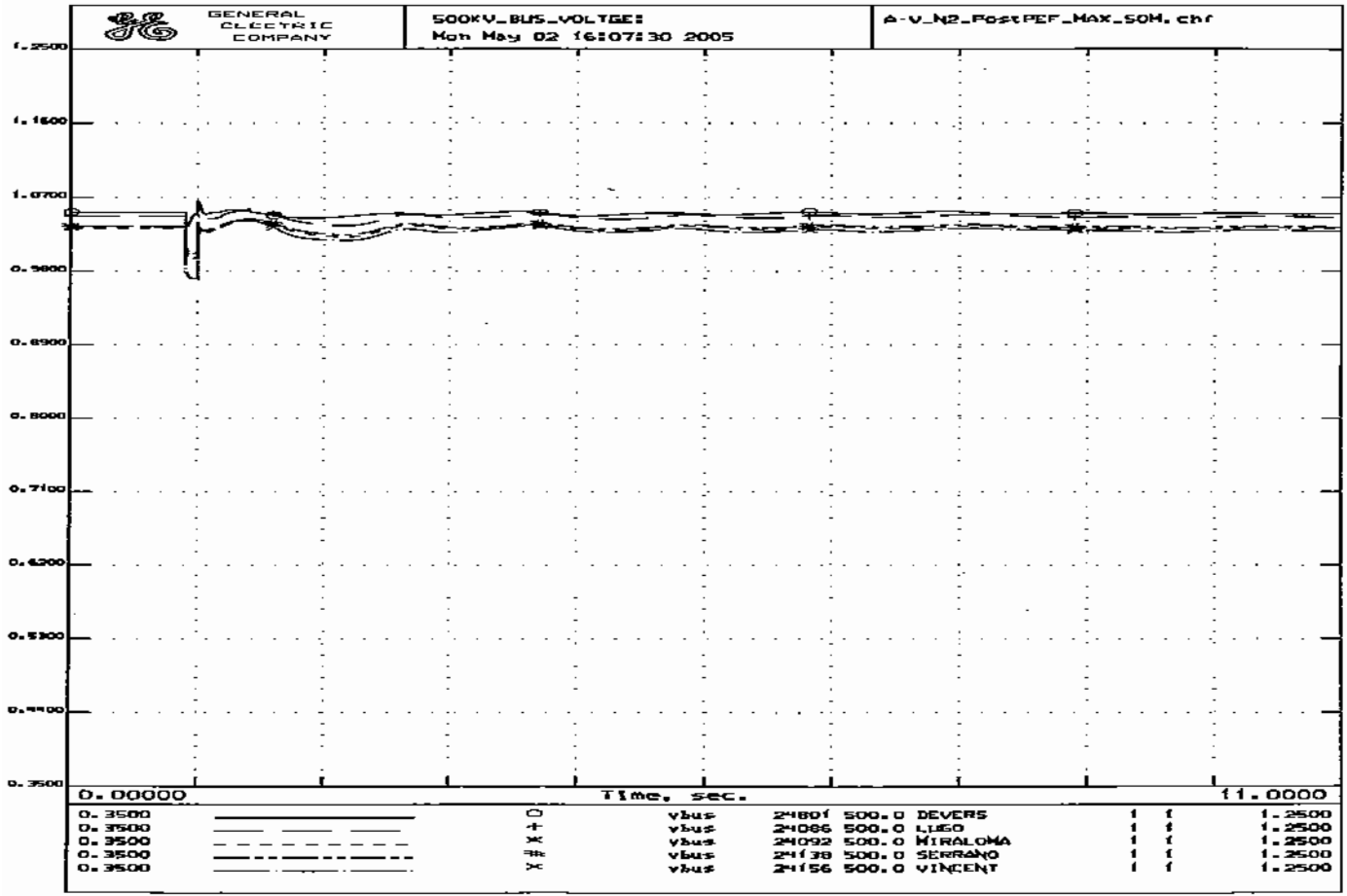
GENERAL ELECTRIC COMPANY
500KV_BUS_VOLTGE:
Mon May 02 16:07:30 2005
A-V_N2_PostPEF_MAX_50M.chf
1.2500
1.1600
1.0700
0.9800
0.8900
0.8000
0.7100
0.6200
0.5300
0.4400
0.3500
0.00000
Time, sec.
11.0000
0.3500 vbus 24801 500.0 DEVERS 1 1 1.2500
0.3500 vbus 24086 500.0 LUGO 1 1 1.2500
0.3500 vbus 24092 500.0 MIRALOMA 1 1 1.2500
0.3500 vbus 24138 500.0 SERRANO 1 1 1.2500
0.3500 vbus 24156 500.0 VINCENT 1 1 1.2500

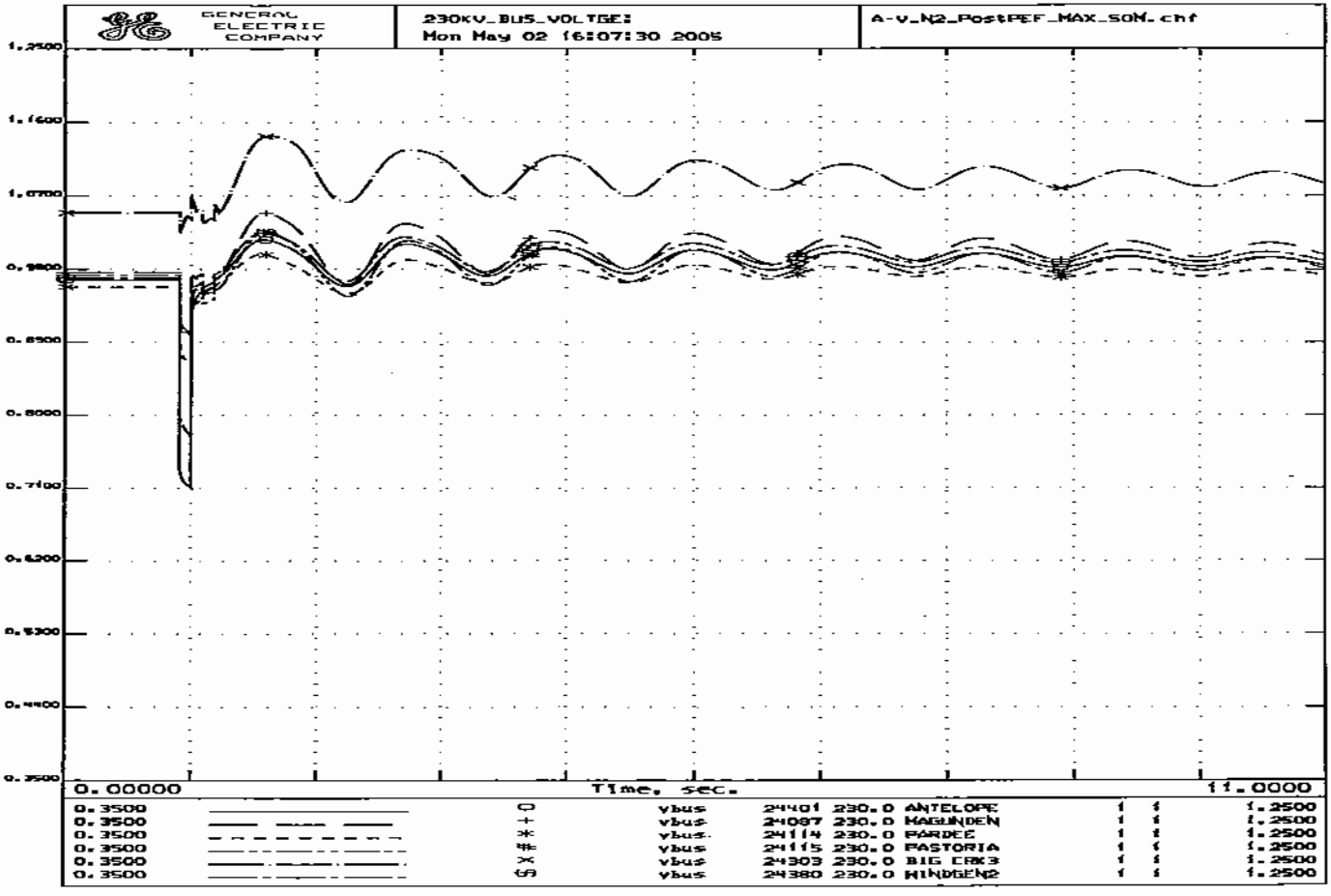
GENERAL ELECTRIC COMPANY
230KV_BUS_VOLTGE:
Mon May 02 16:07:30 2005
A-V_N2_PostPEF_MAX_SON.chf
1.2500
1.1600
1.0700
0.9800
0.8900
0.8000
0.7100
0.6200
0.5300
0.4400
0.3500
0.00000
Time, sec.
11.0000
0.3500 ○ vbus 24401 230.0 ANTELOPE 1 1 1.2500
0.3500 + vbus 24087 230.0 MAGUNDEN 1 1 1.2500
0.3500 * vbus 24114 230.0 PARDEE 1 1 1.2500
0.3500 # vbus 24115 230.0 PASTORIA 1 1 1.2500
0.3500 × vbus 24303 230.0 BIG CRK3 1 1 1.2500
0.3500 ⊗ vbus 24380 230.0 WINDGEN2 1 1 1.2500

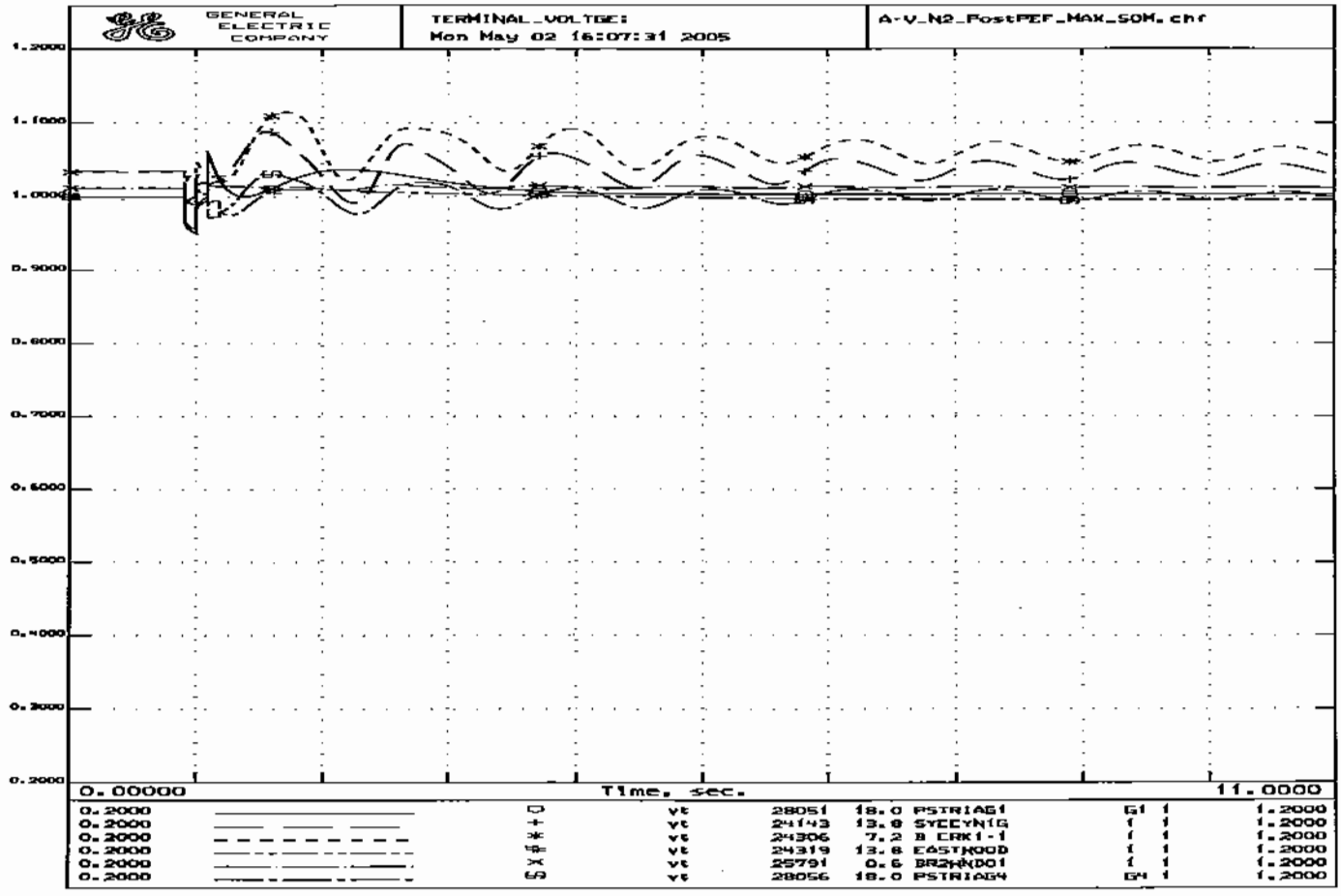
GENERAL ELECTRIC COMPANY
TERMINAL_VOLTGE:
Mon May 02 16:07:31 2005
A-V_N2_PostPEF_MAX_SOM.chf
1.2000
1.1000
1.0000
0.9000
0.8000
0.7000
0.6000
0.5000
0.4000
0.3000
0.2000
0.00000
Time, sec.
11.0000
0.2000 vt 28051 18.0 PSTRIAG1 G1 1 1.2000
0.2000 vt 24143 13.8 SYCCYNIG 1 1 1.2000
0.2000 vt 24306 7.2 B CRK1-1 1 1 1.2000
0.2000 vt 24319 13.8 EASTWOOD 1 1 1.2000
0.2000 vt 25791 0.6 BRANDOI 1 1 1.2000
0.2000 vt 28056 18.0 PSTRIAG4 G4 1 1.2000

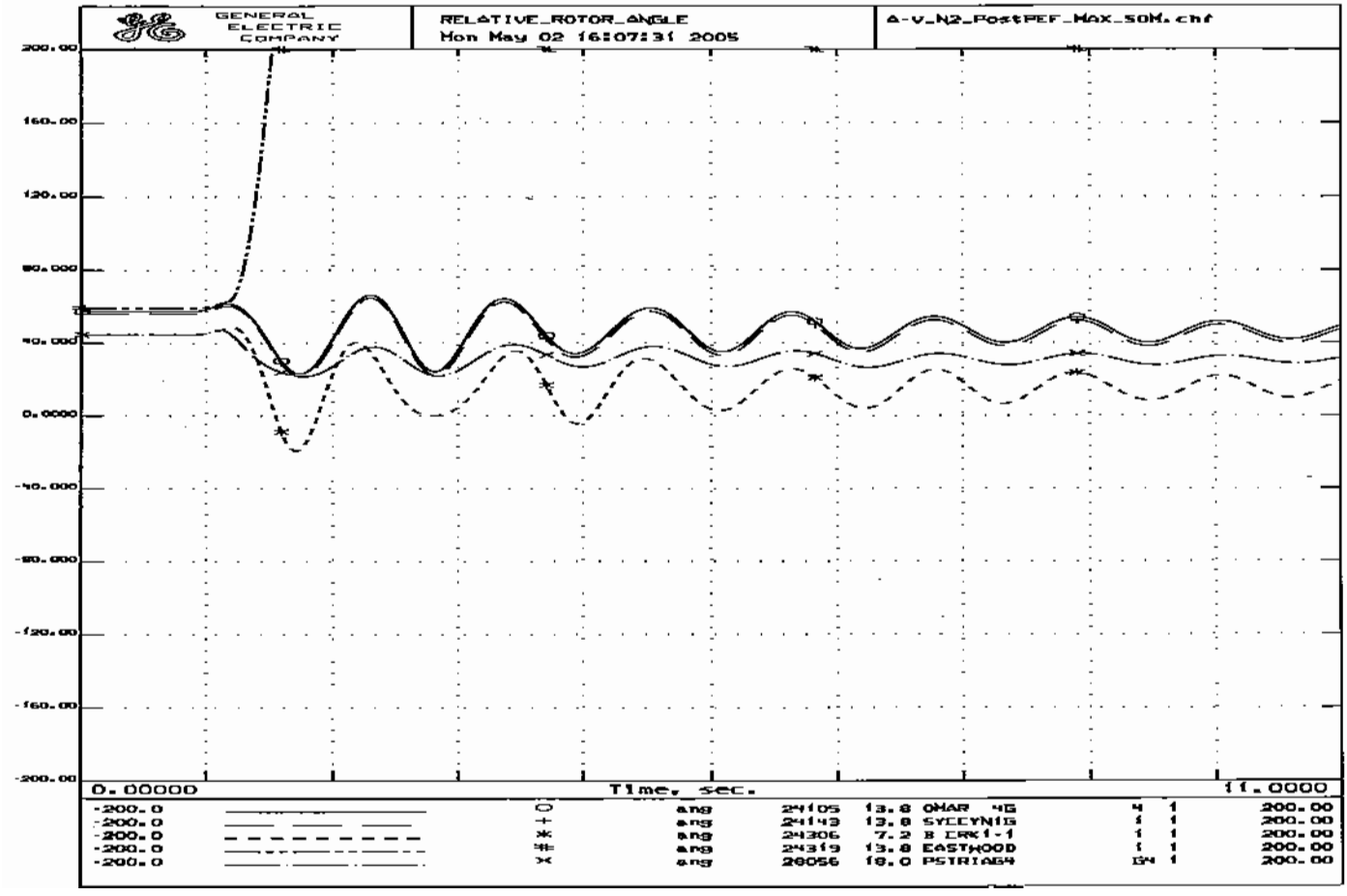
GENERAL ELECTRIC COMPANY
RELATIVE_ROTOR_ANGLE
Mon May 02 16:07:31 2005
A-V_N2_PostPEF_MAX_50M.chf
200.00
160.00
120.00
80.000
40.000
0.0000
-40.000
-80.000
-120.00
-160.00
-200.00
0.00000
Time, sec.
11.0000
-200.0 ang 24105 13.8 OMAR 4G 4 1 200.00
-200.0 ang 24143 13.8 SYCCYNIS 1 1 200.00
-200.0 ang 24306 7.2 B ERK1-1 1 1 200.00
-200.0 ang 24319 13.8 EASTWOOD 1 1 200.00
-200.0 ang 28056 18.0 PSTRIAG4 G4 1 200.00

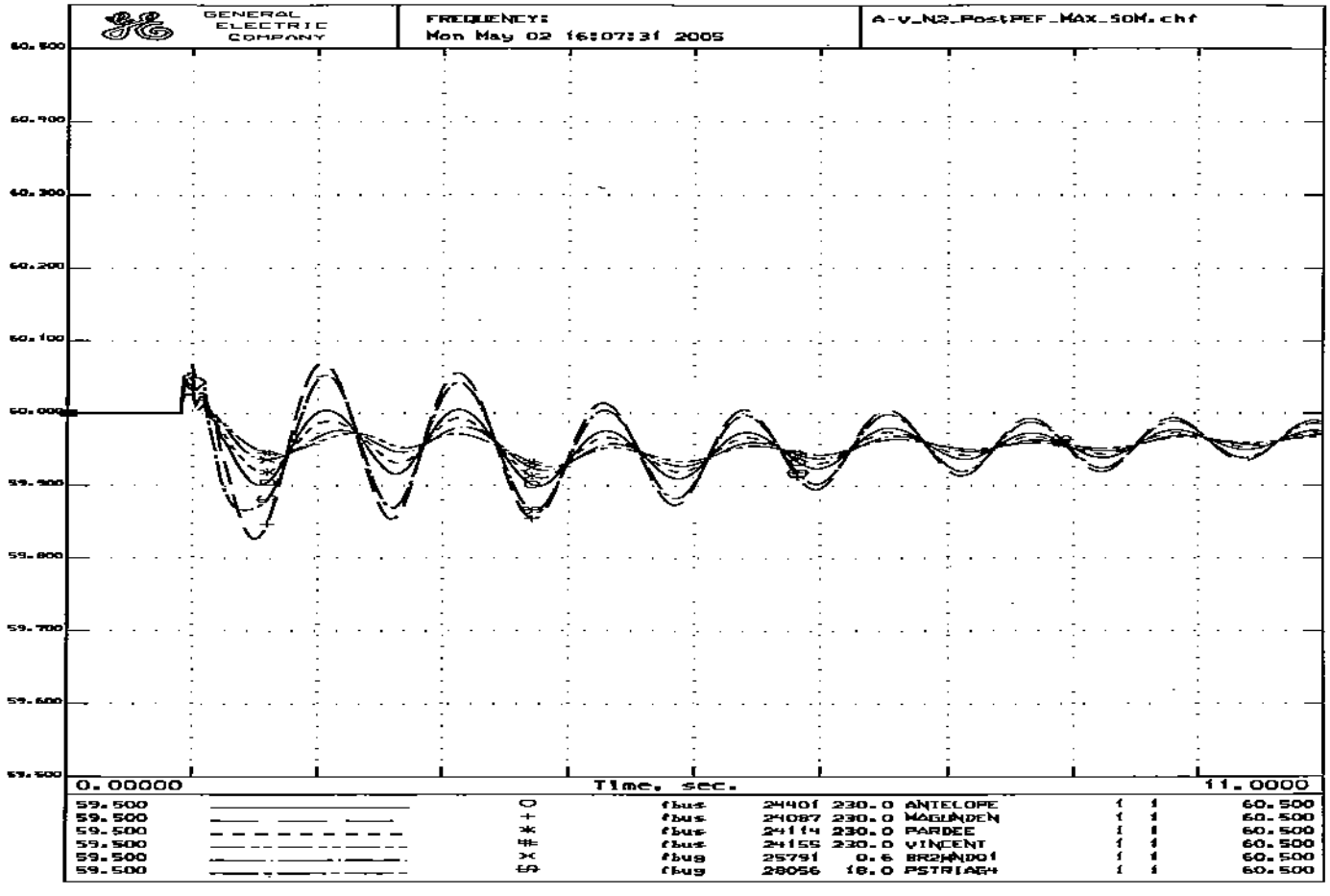
GENERAL ELECTRIC COMPANY
FREQUENCY:
Mon May 02 16:07:31 2005
A-V_N2_PostPEF_MAX_50M.chf
60.500
60.400
60.300
60.200
60.100
60.000
59.900
59.800
59.700
59.600
59.500
0.00000
Time, sec.
11.0000
59.500 fbus 24401 230.0 ANTELOPE 1 1 60.500
59.500 fbus 24087 230.0 MAGUNDEN 1 1 60.500
59.500 fbus 24114 230.0 PARDEE 1 1 60.500
59.500 fbus 24155 230.0 VINCENT 1 1 60.500
59.500 fbug 25791 0.6 BRPANDO1 1 1 60.500
59.500 fbug 28056 18.0 PSTRIAG4 1 1 60.500

```
PostPEF_MAX_SOM.sav
PostPEF.dyd
TITLE
Calpine Pastoria Addition Stability Study: Loss of Two 230-kV Lines
6-CYCLE 1-Phase Fault at Magunden 230kV Bus
N-2 OUTAGE: Magunden-Antelope & Magunden-Windgen2 230kV Lines
SYSTEM STABILITY CASE - Ma-AW2_N2_PostPEF_MAX_SOM.swt
PostPEF_MAX_SOM.sav + PostPEF.dyd + Ma-AW2_N2_PostPEF_MAX_SOM.swt
RUN 10.0
CC
CC   ***Calpine Pastoria Addition DYNAMIC STABILITY ASSESSMENT***
CC   APPLY A 1-PHASE-TO-GROUND FAULT ON THE MAGUNDEN 230-KV BUS
FB   0.0 "MAGUNDEN" 230  0.00468 0.03859
CC
CC   CLEAR FAULT IN 6 CYCLES
CFB  6.0 "MAGUNDEN" 230
CC
CC   REMOVE MAGUNDEN-ANTELOPE NO.1 230-KV LINE
DL   6.0 "MAGUNDEN" 230. "ANTELOPE" 230. "1 "
CC
CC   REMOVE MAGUNDEN-WINDGEN2 230-KV LINE
DL   6.0 "MAGUNDEN" 230. "WINDGEN2" 230. "1 "
CC
CC   IMPLEMENT PEF SPECIAL PROTECTION SCHEME FOR N-2
TG   12.0 "PSTRIAS1" 18.00 "S1"
TG   12.0 "PSTRIAG1" 18.00 "G1"
TG   12.0 "PSTRIAG2" 18.00 "G2"
TG   12.0 "PSTRIAS2" 18.00 "S2"
TG   12.0 "PSTRIAG3" 18.00 "G3"
CC
CC   INITIATE SEL-68 STABILITY TRIP
TG   18.0 "MAMOTH1G" 13.80 "1 "
TG   18.0 "MAMOTH2G" 13.80 "2 "
TG   18.0 "EASTWOOD" 13.80 "1 "
```

GENERAL ELECTRIC COMPANY

500KV_BUS_VOLTGE:
Mon May 02 16:07:35 2005

M8-AH2_N2_PostPEF_MAX_50M.chf

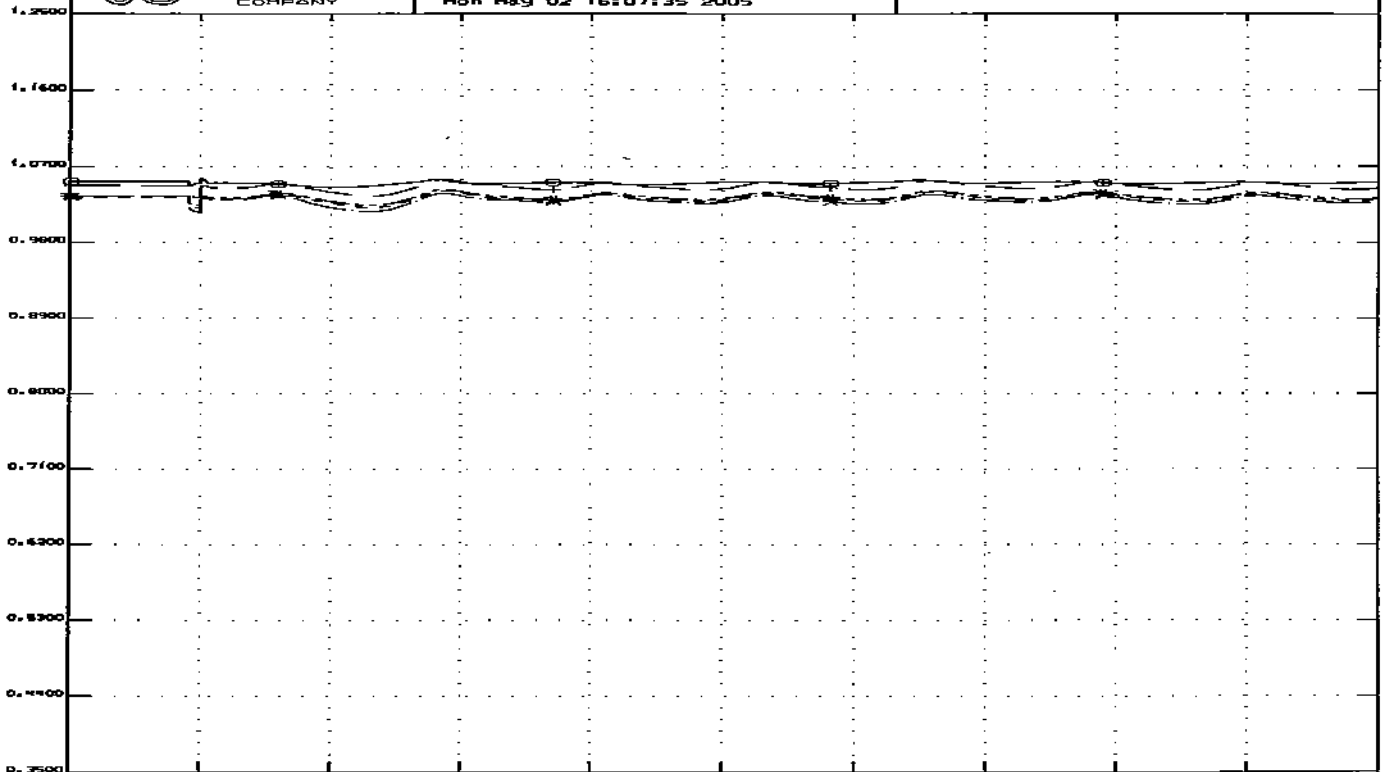

0.3500		O	vbus	24801	500.0	DEVERS	1	1	1.2500
0.3500		+	vbus	24086	500.0	LUGO	1	1	1.2500
0.3500		*	vbus	24092	500.0	HIRALOMA	1	1	1.2500
0.3500		#	vbus	24138	500.0	SERRANO	1	1	1.2500
0.3500		X	vbus	24156	500.0	VINCENT	1	1	1.2500

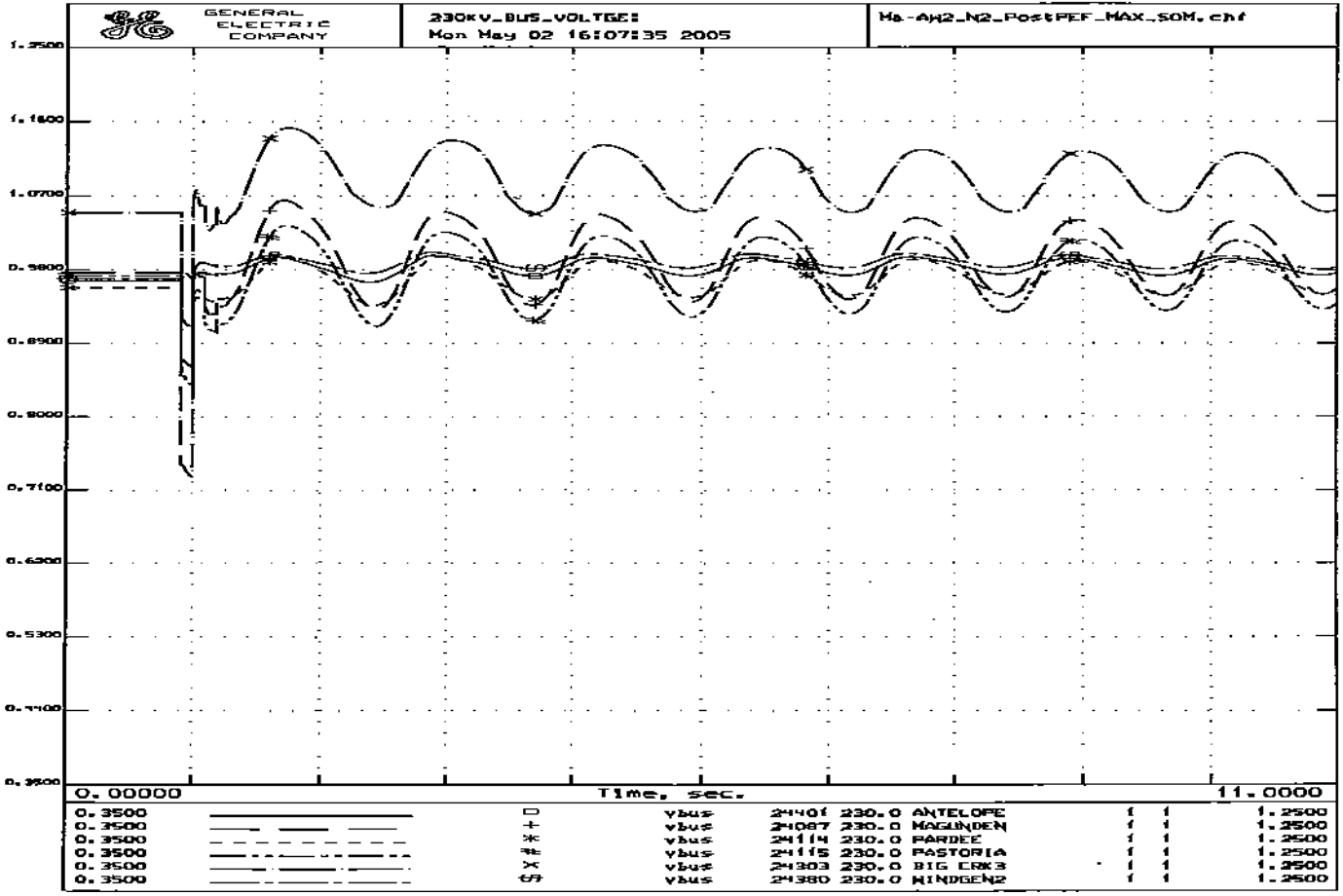
GENERAL ELECTRIC COMPANY
230KV_BUS_VOLTGE:
Mon May 02 16:07:35 2005
Ma-AH2_N2_PostPEF_MAX_SOM.chf
1.2500
1.1600
1.0700
0.9800
0.8900
0.8000
0.7100
0.6200
0.5300
0.4400
0.3500
0.00000
Time, sec.
11.0000
0.3500 □ vbus 24401 230.0 ANTELOPE 1 1 1.2500
0.3500 + vbus 24087 230.0 MAGUNDEN 1 1 1.2500
0.3500 * vbus 24114 230.0 PARDEE 1 1 1.2500
0.3500 vbus 24115 230.0 PASTORIA 1 1 1.2500
0.3500 × vbus 24303 230.0 BIG CRK3 1 1 1.2500
0.3500 vbus 24380 230.0 WINDGEN2 1 1 1.2500

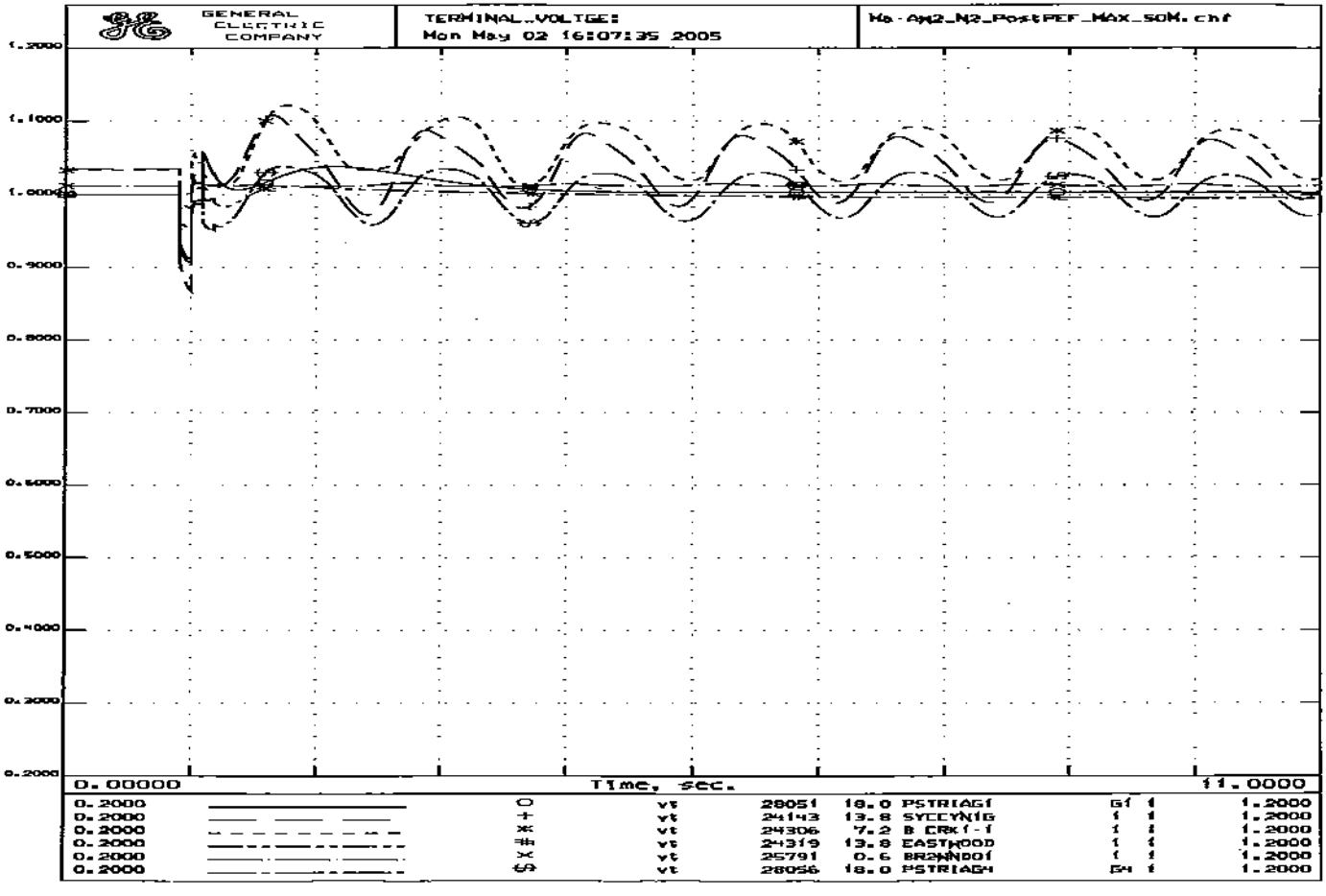
GENERAL ELECTRIC COMPANY
TERMINAL_VOLTGE:
Mon May 02 16:07:35 2005
Ka-AM2_N2_PostPEF_MAX_50M.chf
1.2000
1.1000
1.0000
0.9000
0.8000
0.7000
0.6000
0.5000
0.4000
0.3000
0.2000
0.00000
Time, sec.
11.0000
0.2000 ○ vt 28051 18.0 PSTRIAG1 G1 1 1.2000
0.2000 + vt 24143 13.8 SYCCYNIG 1 1 1.2000
0.2000 × vt 24306 7.2 B CRK1-1 1 1 1.2000
0.2000 # vt 24319 13.8 EASTWOOD 1 1 1.2000
0.2000 vt 25791 0.6 BR2WNDO1 1 1 1.2000
0.2000 vt 28056 18.0 PSTRIAG4 G4 1 1.2000

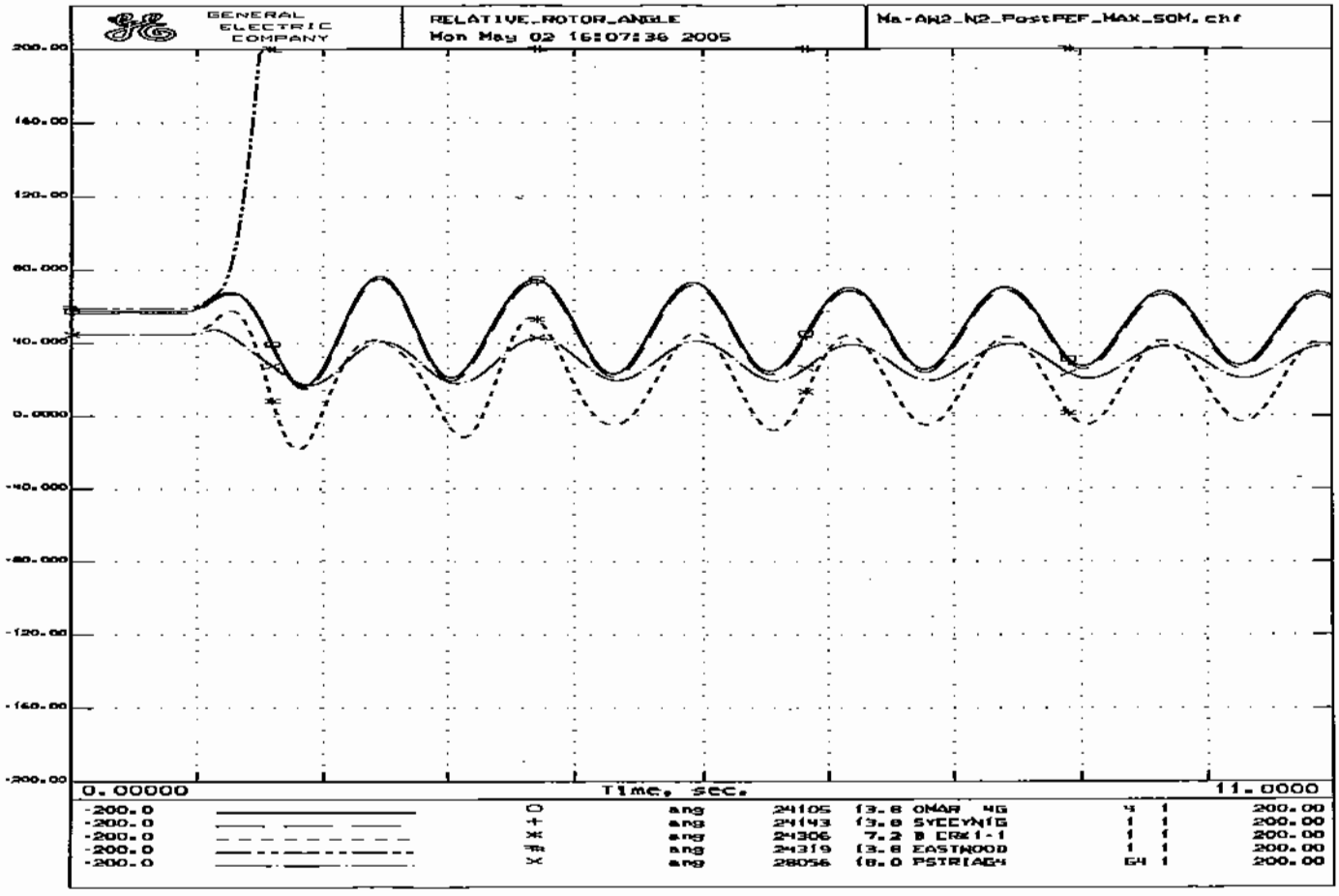
GENERAL ELECTRIC COMPANY
RELATIVE_ROTOR_ANGLE
Mon May 02 16:07:36 2005
Ma-AW2_N2_PostPEF_MAX_SOM.chf
200.00
160.00
120.00
80.000
40.000
0.0000
-40.000
-80.000
-120.00
-160.00
-200.00
0.00000
Time, sec.
11.0000
-200.0 ang 24105 13.8 OMAR 4G 4 1 200.00
-200.0 ang 24143 13.8 SYECYN1G 1 1 200.00
-200.0 ang 24306 7.2 B ER#1-1 1 1 200.00
-200.0 ang 24319 13.8 EASTWOOD 1 1 200.00
-200.0 ang 28056 18.0 PSTRIAG4 G4 1 200.00

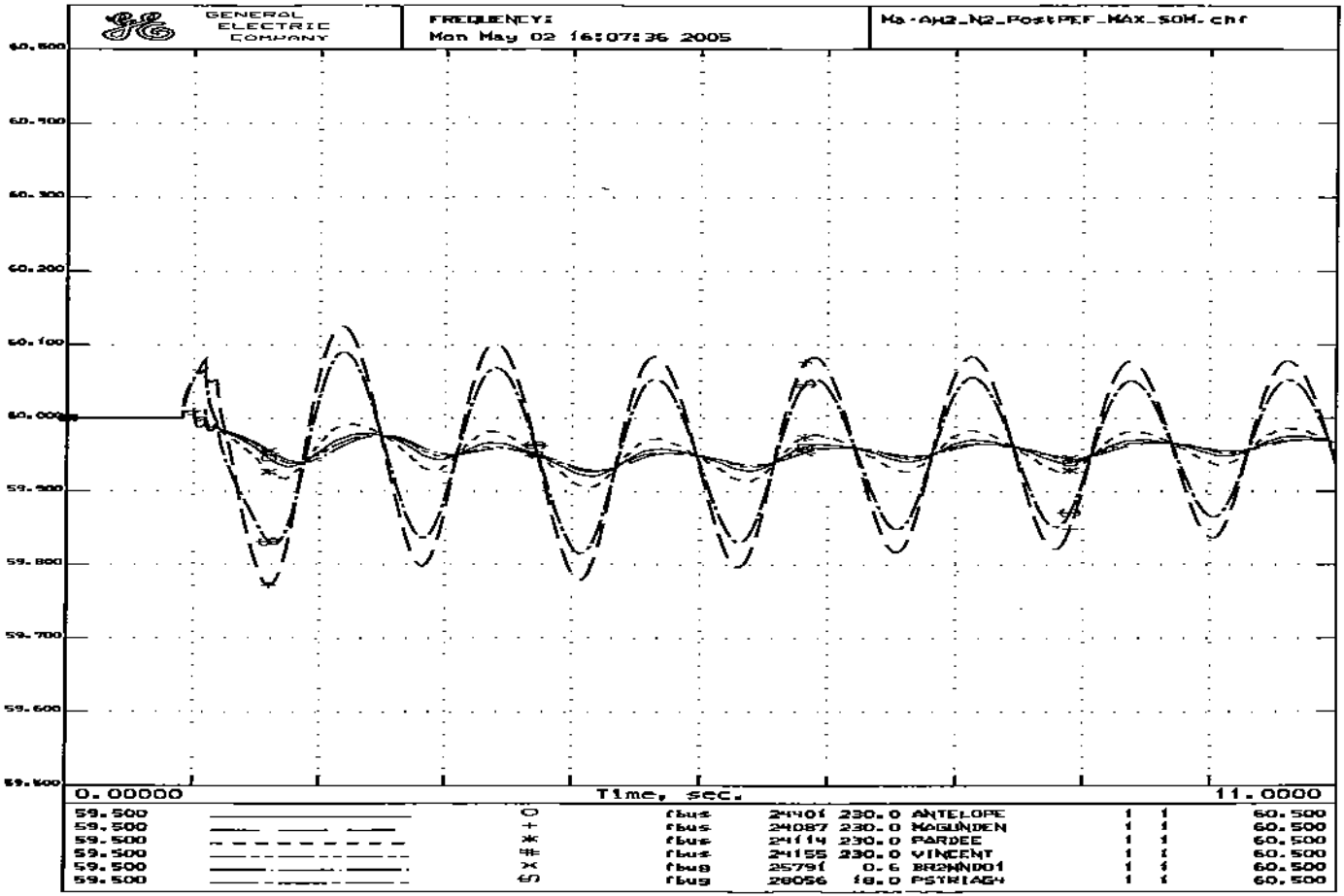
GENERAL ELECTRIC COMPANY
FREQUENCY:
Mon May 02 16:07:36 2005
Ma-AH2_N2_PostPEF_MAX_50M.chf
60.500
60.400
60.300
60.200
60.100
60.000
59.900
59.800
59.700
59.600
59.500
0.00000
Time, sec.
11.0000
59.500 ○ fbus 24401 230.0 ANTELOPE 1 1 60.500
59.500 + fbus 24087 230.0 MAGUNDEN 1 1 60.500
59.500 ✱ fbus 24114 230.0 PARDEE 1 1 60.500
59.500 # fbus 24155 230.0 VINCENT 1 1 60.500
59.500 × fbus 25791 0.6 BRWNDO1 1 1 60.500
59.500 fbus 28056 18.0 PSTRIAG4 1 1 60.500

```
PostPEF_MAX_SOM.sav
PostPEF.dyd
TITLE
Calpine Pastoria Addition Stability Study: Loss of Two 230-kV Lines
6-CYCLE 1-Phase Fault at Magunden 230kV Bus
N-2 OUTAGE: Magunden-Pastoria No.1 and No.3 230kV Lines
SYSTEM STABILITY CASE - Ma-Pas_N2_PostPEF_MAX_SOM.swt
PostPEF_MAX_SOM.sav + PostPEF.dyd + Ma-Pas_N2_PostPEF_MAX_SOM.swt
RUN 10.0
CC
CC   ***Calpine Pastoria Addition DYNAMIC STABILITY ASSESSMENT***
CC   APPLY A 1-PHASE-TO-GROUND FAULT ON THE MAGUNDEN 230-KV BUS
FB   0.0 "MAGUNDEN" 230   0.00468 0.03859
CC
CC   CLEAR FAULT IN 6 CYCLES
CFB  6.0 "MAGUNDEN" 230
CC
CC   REMOVE MAGUNDEN-ANTELOPE NO.1 230-KV LINE
DL   6.0 "MAGUNDEN" 230.  "PASTORIA" 230.  "1 "
CC
CC   REMOVE MAGUNDEN-ANTELOPE NO.3 230-KV LINE
DL   6.0 "MAGUNDEN" 230.  "PASTORIA" 230.  "3 "
CC
CC   INITIATE SEL-68 STABILITY TRIP
TG   18.0 "MAMOTH1G" 13.80 "1 "
TG   18.0 "MAMOTH2G" 13.80 "2 "
TG   18.0 "EASTWOOD" 13.80 "1 "
```

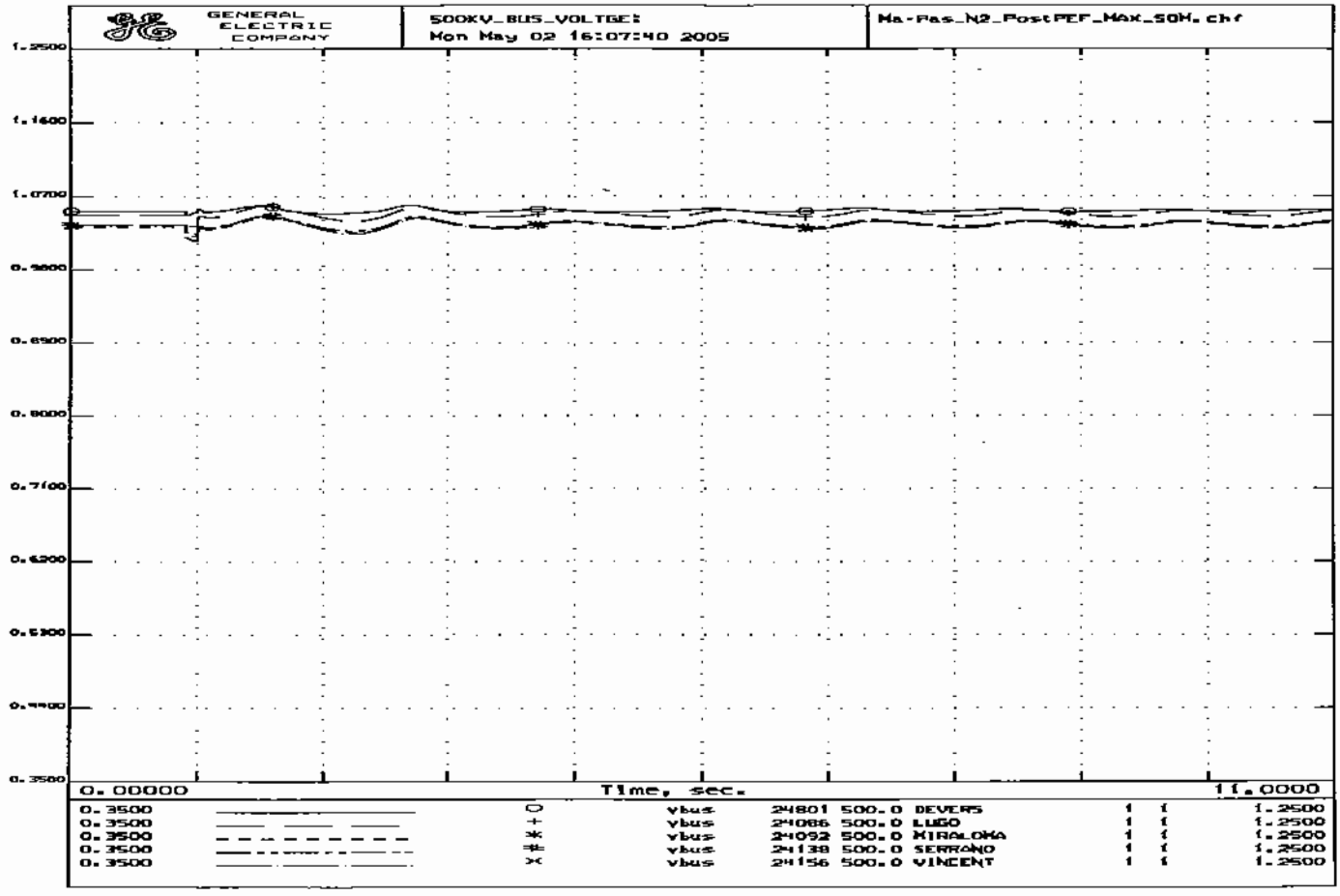
GENERAL ELECTRIC COMPANY
500KV_BUS_VOLTGE:
Mon May 02 16:07:40 2005
Ma-Pas_N2_PostPEF_MAX_SOH.chf
1.2500
1.1600
1.0700
0.9800
0.8900
0.8000
0.7100
0.6200
0.5300
0.4400
0.3500
0.00000
Time, sec.
11.0000
0.3500 ○ vbus 24801 500.0 DEVERS 1 1 1.2500
0.3500 + vbus 24086 500.0 LUGO 1 1 1.2500
0.3500 * vbus 24092 500.0 MIRALOMA 1 1 1.2500
0.3500 # vbus 24138 500.0 SERRANO 1 1 1.2500
0.3500 × vbus 24156 500.0 VINCENT 1 1 1.2500

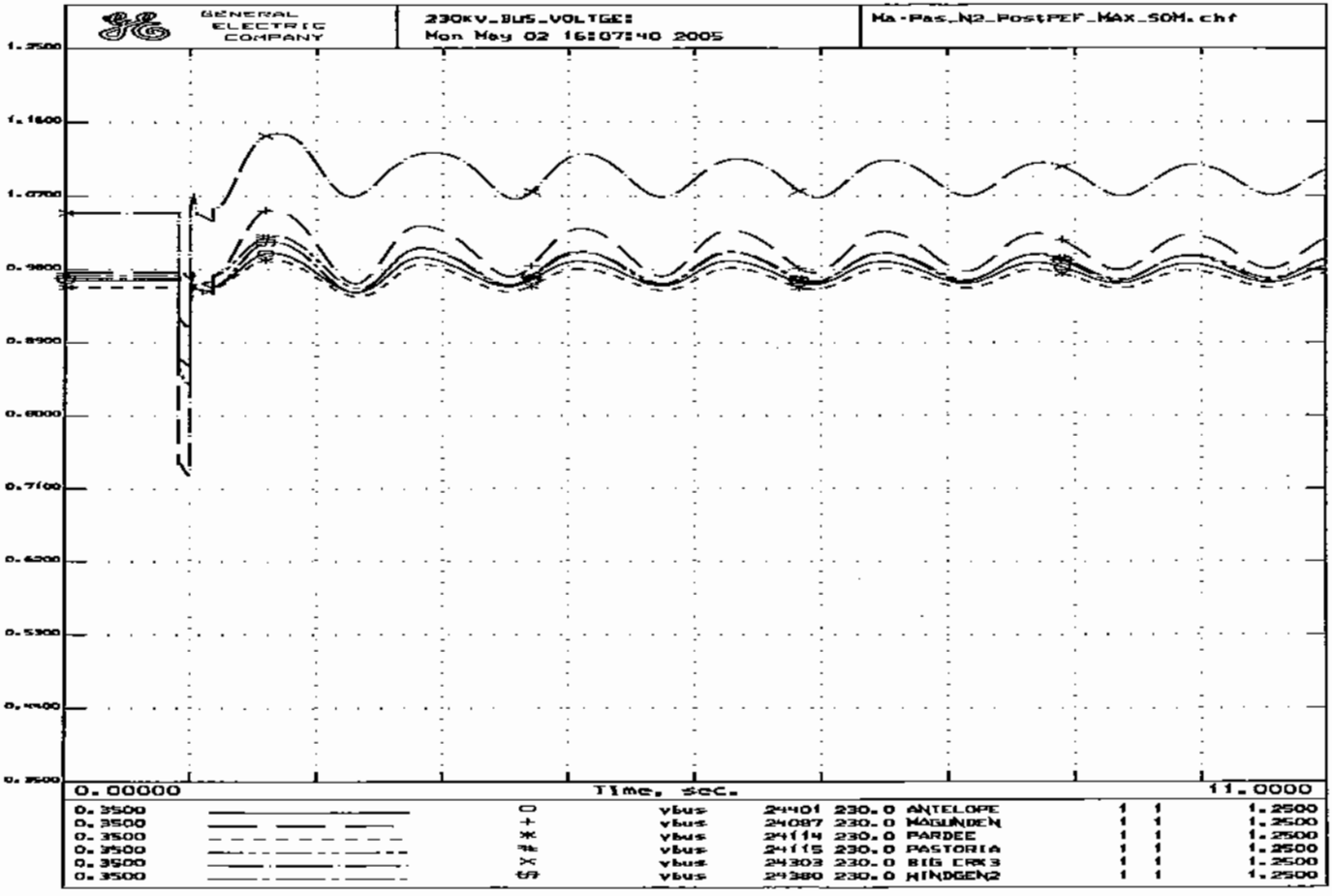
GENERAL ELECTRIC COMPANY
230KV_BUS_VOLTGE:
Mon May 02 16:07:40 2005
Ma-Pas_N2_PostPEF_MAX_SOM.chf
1.2500
1.1600
1.0700
0.9800
0.8900
0.8000
0.7100
0.6200
0.5300
0.4400
0.3500
0.00000
Time, sec.
11.0000
0.3500 ○ vbus 24401 230.0 ANTELOPE 1 1 1.2500
0.3500 + vbus 24087 230.0 MAGUNDEN 1 1 1.2500
0.3500 ✱ vbus 24114 230.0 PARDEE 1 1 1.2500
0.3500 vbus 24115 230.0 PASTORIA 1 1 1.2500
0.3500 × vbus 24303 230.0 BIG CRK3 1 1 1.2500
0.3500 vbus 29380 230.0 HINDGEN2 1 1 1.2500

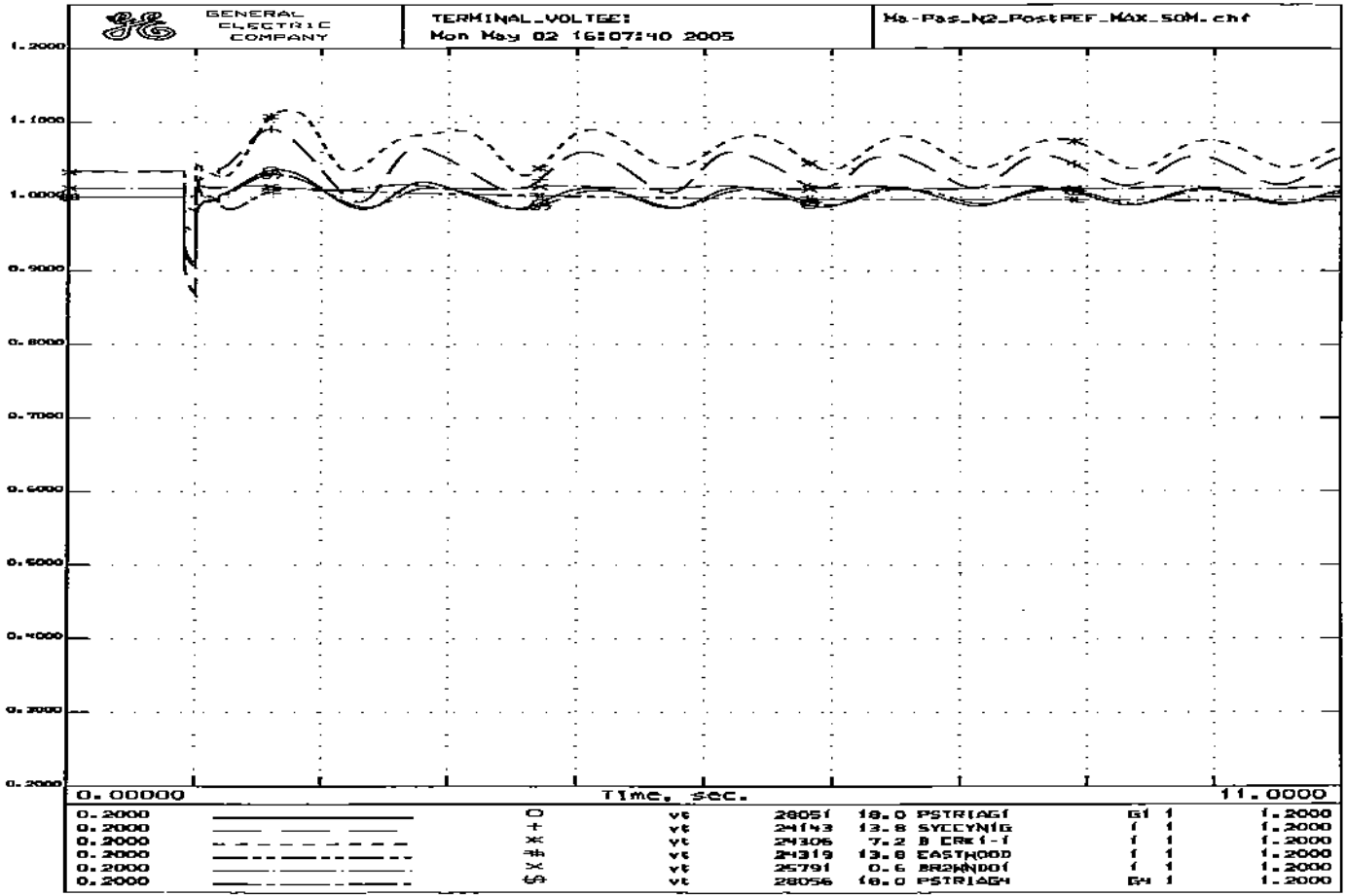
GENERAL ELECTRIC COMPANY
TERMINAL_VOLTGE:
Mon May 02 16:07:40 2005
Ma-Pas_N2_PostPEF_MAX_50M.chf
1.2000
1.1000
1.0000
0.9000
0.8000
0.7000
0.6000
0.5000
0.4000
0.3000
0.2000
0.00000
Time, sec.
11.0000
0.2000 ○ vt 28051 18.0 PSTRIAGI G1 1 1.2000
0.2000 + vt 24143 13.8 SYCCYNIG 1 1 1.2000
0.2000 × vt 24306 7.2 B ERK1-1 1 1 1.2000
0.2000 # vt 24319 13.8 EASTWOOD 1 1 1.2000
0.2000 × vt 25791 0.6 BRZWNDOI 1 1 1.2000
0.2000 vt 28056 18.0 PSTRIAGH G4 1 1.2000

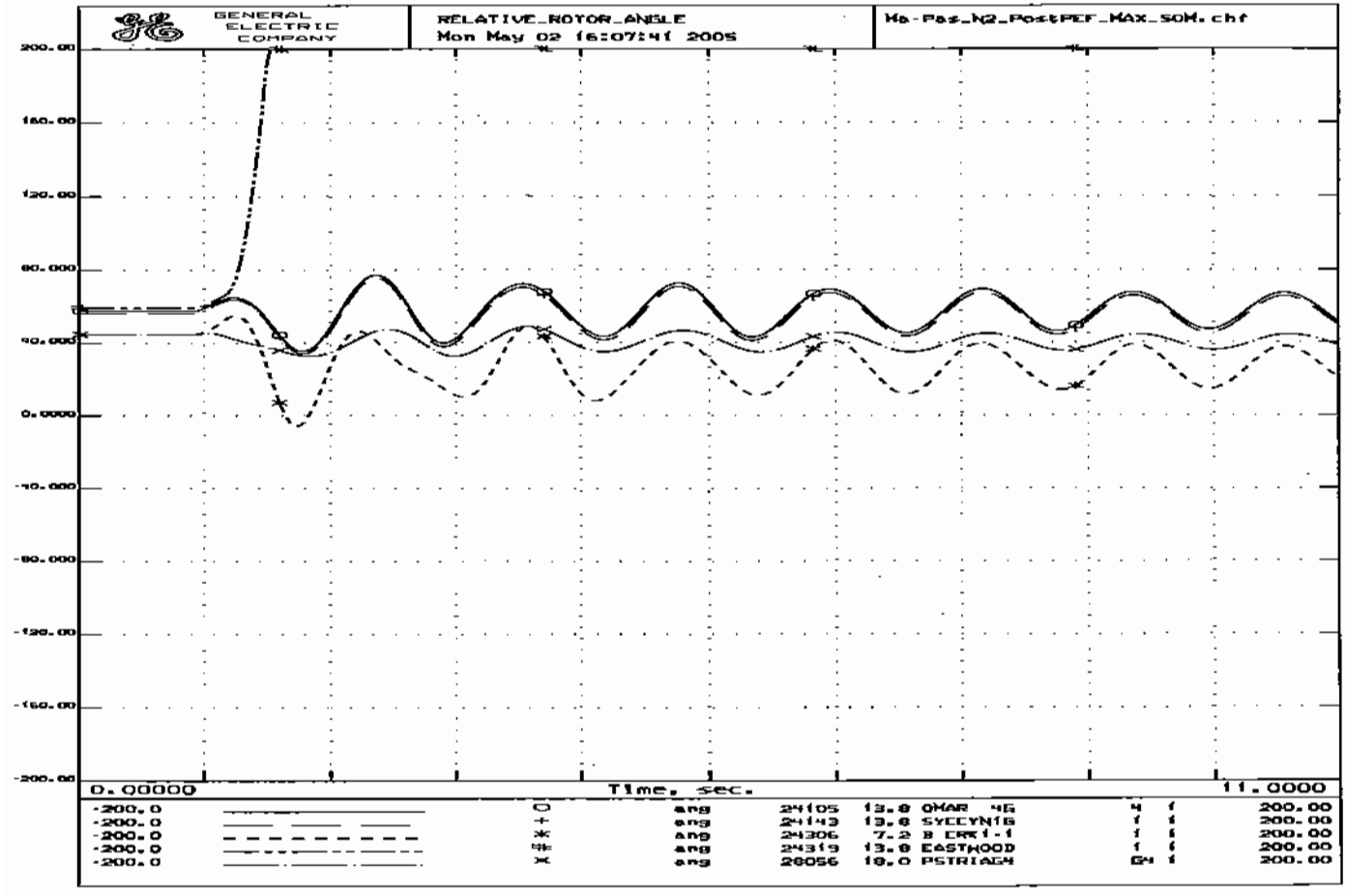
GENERAL ELECTRIC COMPANY
RELATIVE_ROTOR_ANGLE
Mon May 02 16:07:41 2005
Ma-Pas_N2_PostPEF_MAX_50M.chf
200.00
160.00
120.00
80.000
40.000
0.0000
-40.000
-80.000
-120.00
-160.00
-200.00
0.00000
Time, sec.
11.0000
-200.0 ang 24105 13.8 OMAR 4G 4 1 200.00
-200.0 ang 24143 13.8 SYCCYN1G 1 1 200.00
-200.0 ang 24306 7.2 B ERK1-1 1 1 200.00
-200.0 ang 24319 13.8 EASTWOOD 1 1 200.00
-200.0 ang 28056 18.0 PSTRIAGN G4 1 200.00

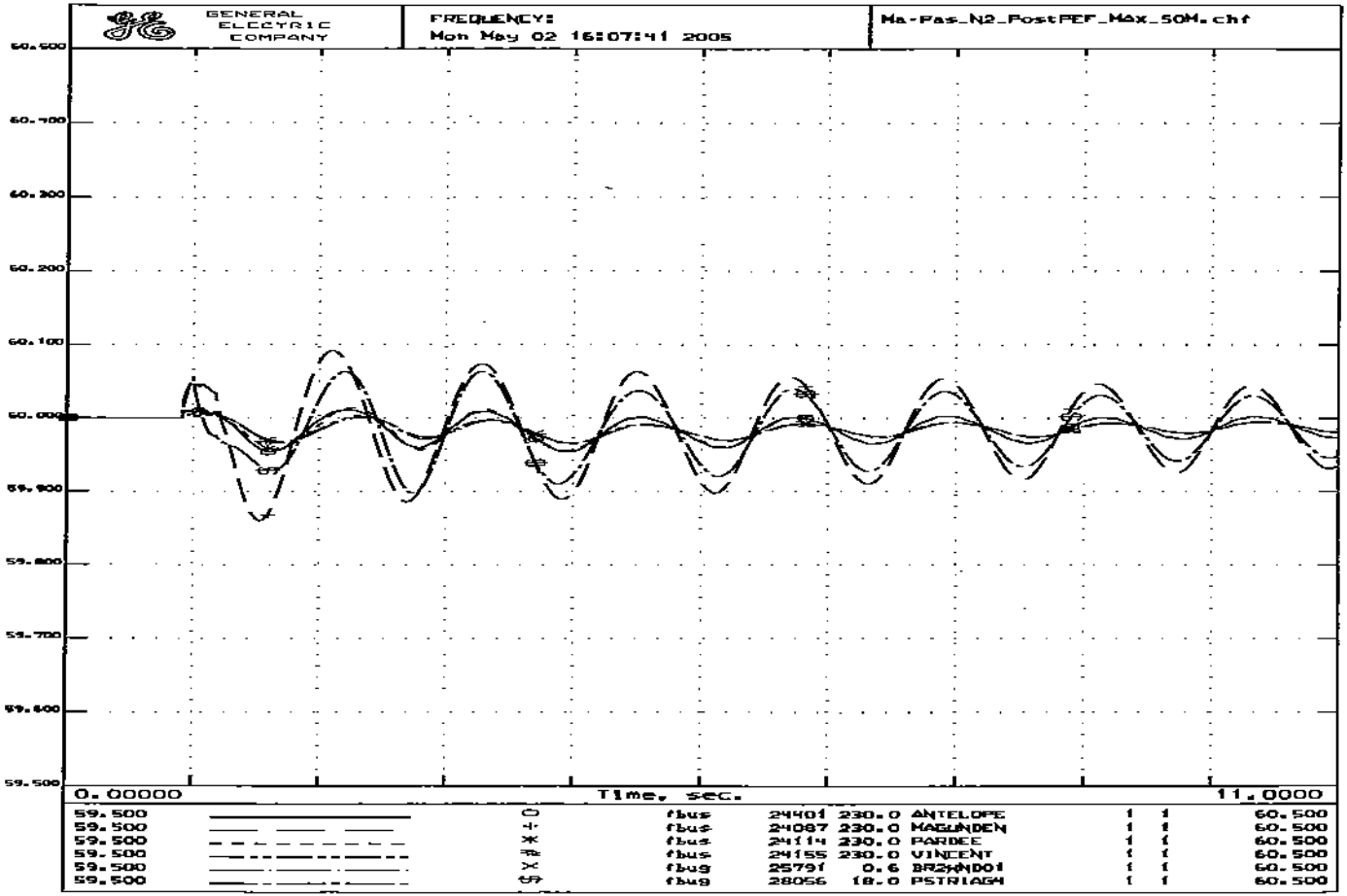
GENERAL ELECTRIC COMPANY
FREQUENCY:
Mon May 02 16:07:41 2005
Ma-Pas_N2_PostPEF_Max_50M.chf
60.500
60.400
60.300
60.200
60.100
60.000
59.900
59.800
59.700
59.600
59.500
0.00000
Time, sec.
11.0000
59.500 ○ fbus 24401 230.0 ANTELOPE 1 1 60.500
59.500 + fbus 24087 230.0 MAGUNDEN 1 1 60.500
59.500 ✱ fbus 24114 230.0 PARDEE 1 1 60.500
59.500 ⊕ fbus 24155 230.0 VINCENT 1 1 60.500
59.500 × fbus 25791 0.6 BR2WND01 1 1 60.500
59.500 ⊗ fbus 28056 18.0 PSTRIAGH 1 1 60.500

```
PostPEF_MAX_SOM.sav
PostPEF.dyd
TITLE
Calpine Pastoria Addition Stability Study: Loss of Two 230-kV Lines
6-CYCLE 1-Phase Fault at Pastoria 230kV Bus
N-2 OUTAGE: Bailey-Pastoria and Pardee-Pastoria 230kV Lines
SYSTEM STABILITY CASE - Pas-BPar_N2_PostPEF_MAX_SOM.swt
PostPEF_MAX_SOM.sav + PostPEF.dyd + Pas-BPar_N2_PostPEF_MAX_SOM.swt
RUN 10.0
CC
CC   ***Calpine Pastoria Addition DYNAMIC STABILITY ASSESSMENT***
CC   APPLY A 1-PHASE-TO-GROUND FAULT ON THE PASTORIA 230-KV BUS
FB   0.0 "PASTORIA" 230  0.00172 0.02058
CC
CC   CLEAR FAULT IN 6 CYCLES
CFB 6.0 "PASTORIA" 230
CC
CC   REMOVE BAILEY-PASTORIA 230-KV LINE
DL   6.0 "BAILEY  " 230. "PASTORIA" 230. "1 "
CC
CC   REMOVE PARDEE-PASTORIA 230-KV LINE
DL   6.0 "PARDEE  " 230. "PASTORIA" 230. "1 "
CC
CC   IMPLEMENT PEF SPECIAL PROTECTION SCHEME FOR N-2
TG   12.0 "PSTRIAS1" 18.00 "S1"
TG   12.0 "PSTRIAG1" 18.00 "G1"
TG   12.0 "PSTRIAG2" 18.00 "G2"
TG   12.0 "PSTRIAS2" 18.00 "S2"
TG   12.0 "PSTRIAG3" 18.00 "G3"
CC
CC   INITIATE SEL-68 STABILITY TRIP
TG   18.0 "MAMOTH1G" 13.80 "1 "
TG   18.0 "MAMOTH3G" 13.80 "2 "
TG   18.0 "EASTWOOD" 13.80 "1 "
```

GENERAL ELECTRIC COMPANY

500KV_BUS_VOLTGE:
Mon May 02 16:08:02 2005

Pas-BPar_N2_PostPEF_MAX_SOM.chf

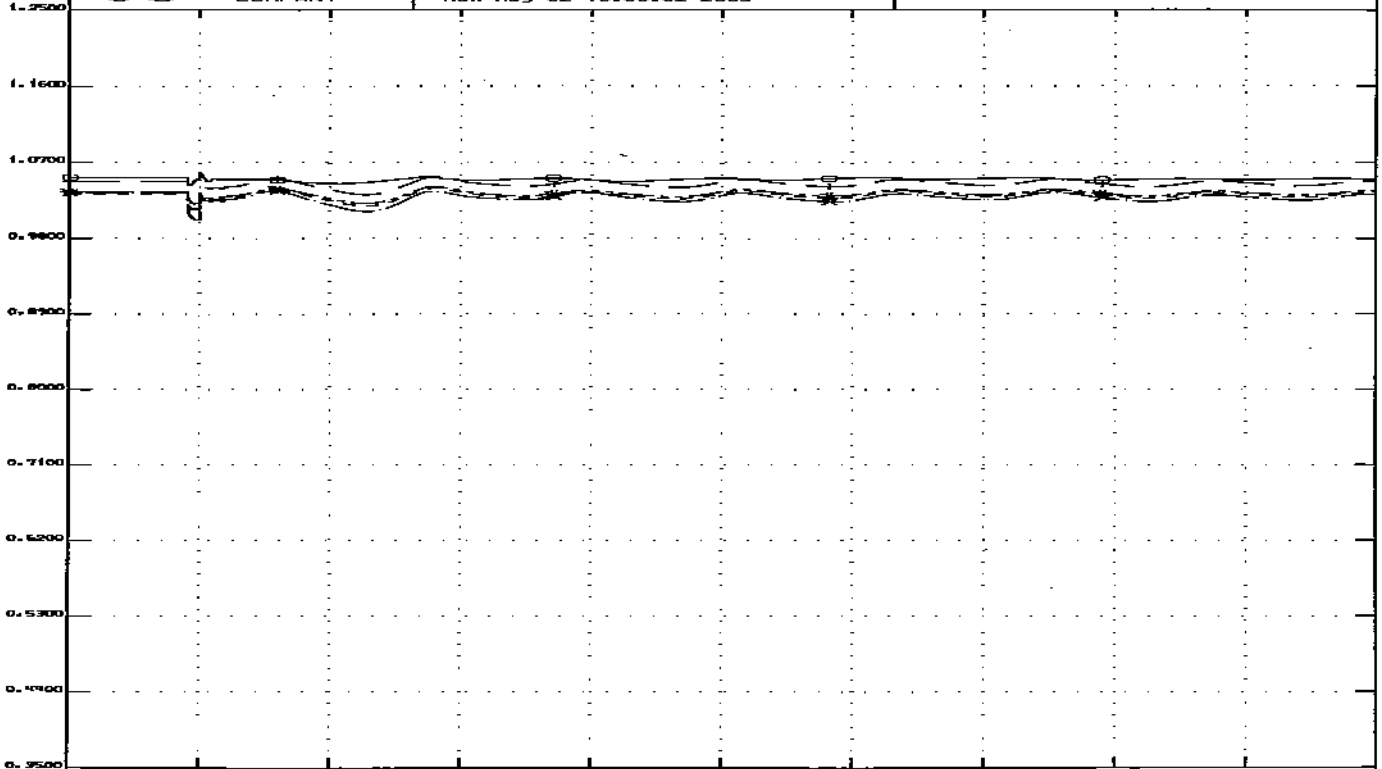

0.3500	□	vbus	24801	500.0	DEVERS	1	1	1.2500
0.3500	+	vbus	24086	500.0	LUGO	1	1	1.2500
0.3500	*	vbus	24092	500.0	MIRALOMA	1	1	1.2500
0.3500	#	vbus	24138	500.0	SERRANO	1	1	1.2500
0.3500	X	vbus	24156	500.0	VINCENT	1	1	1.2500

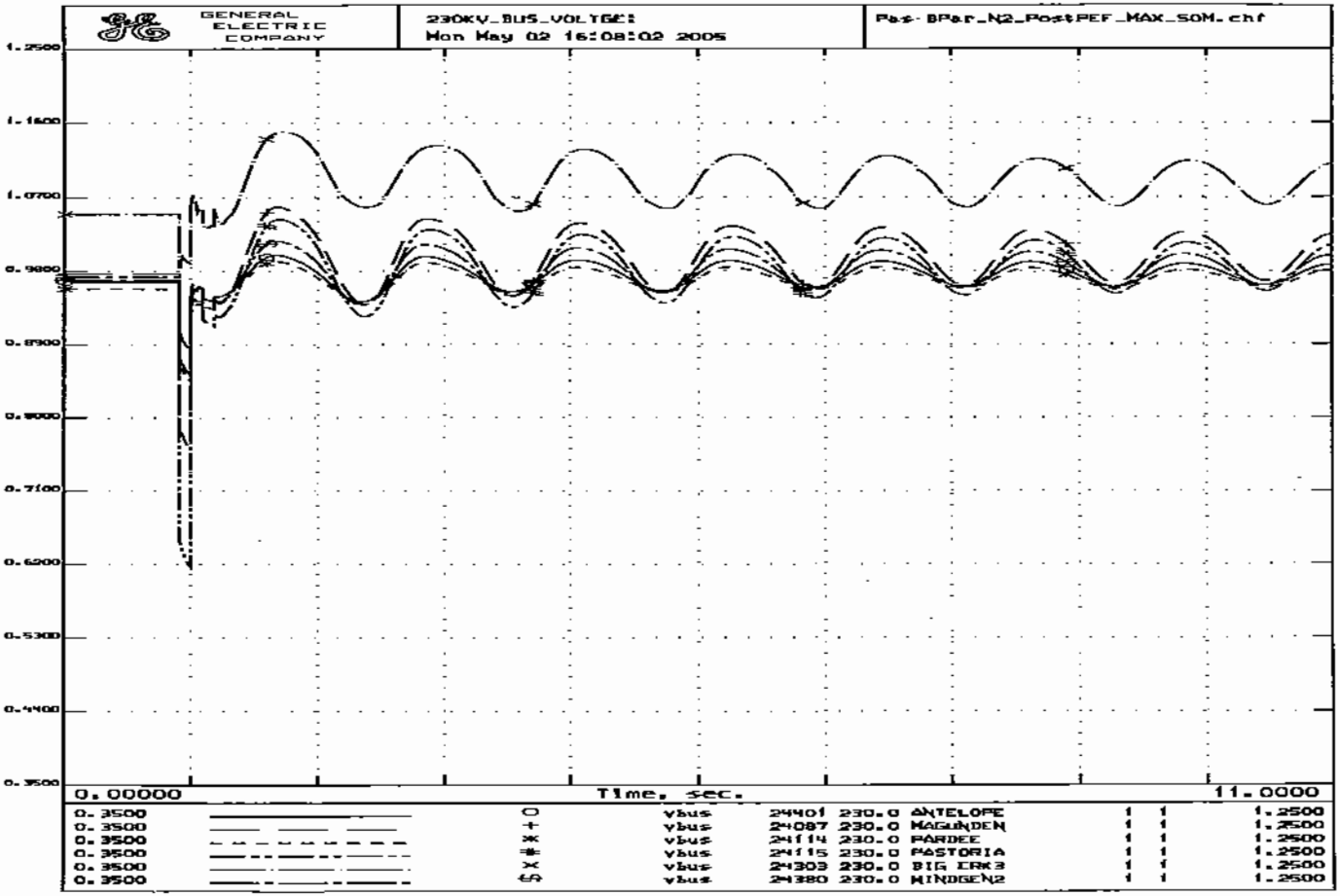
GENERAL ELECTRIC COMPANY
230KV_BUS_VOLTGE:
Mon May 02 16:08:02 2005
Pas-BPar_N2_PostPEF_MAX_SOM.chf
1.2500
1.1600
1.0700
0.9800
0.8900
0.8000
0.7100
0.6200
0.5300
0.4400
0.3500
0.00000
Time, sec.
11.0000
0.3500 O vbus 24401 230.0 ANTELOPE 1 1 1.2500
0.3500 + vbus 24087 230.0 MAGUNDEN 1 1 1.2500
0.3500 * vbus 24114 230.0 PARDEE 1 1 1.2500
0.3500 # vbus 24115 230.0 PASTORIA 1 1 1.2500
0.3500 x vbus 24303 230.0 BIG CRK3 1 1 1.2500
0.3500 vbus 24380 230.0 MINDGEN2 1 1 1.2500

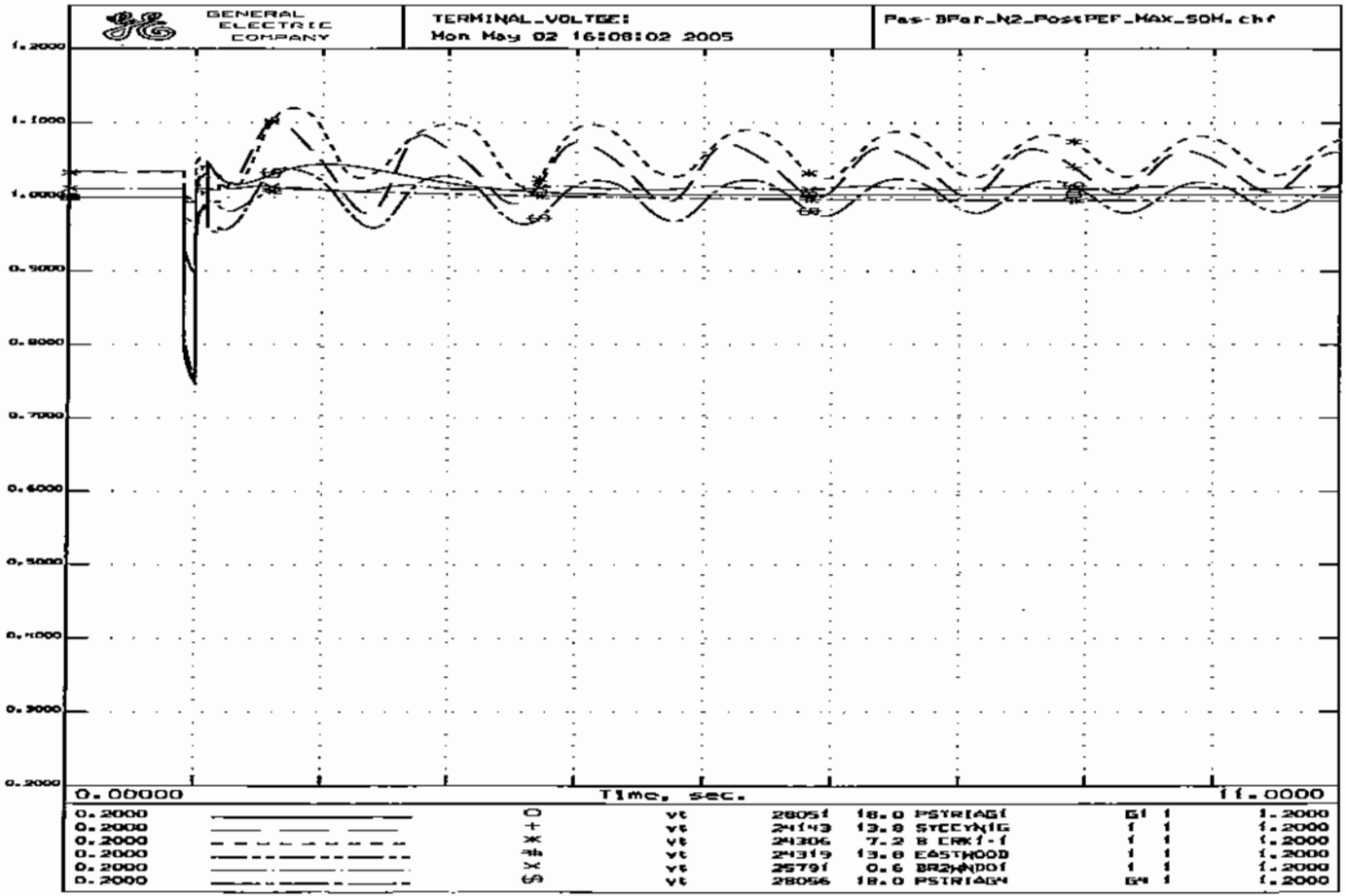
GENERAL ELECTRIC COMPANY
TERMINAL_VOLTGE:
Mon May 02 16:08:02 2005
Pas-BPar_N2_PostPEF_MAX_SOH.chf
1.2000
1.1000
1.0000
0.9000
0.8000
0.7000
0.6000
0.5000
0.4000
0.3000
0.2000
0.00000
Time, sec.
11.0000
0.2000 ○ vt 28051 18.0 PSTRIAG1 G1 1 1.2000
0.2000 + vt 24143 13.8 SYCCYNIG 1 1 1.2000
0.2000 × vt 24306 7.2 B CRK1-1 1 1 1.2000
0.2000 vt 24319 13.8 EASTWOOD 1 1 1.2000
0.2000 × vt 25791 0.6 BRZHNDO1 1 1 1.2000
0.2000 vt 28056 18.0 PSTRIAG4 G4 1 1.2000

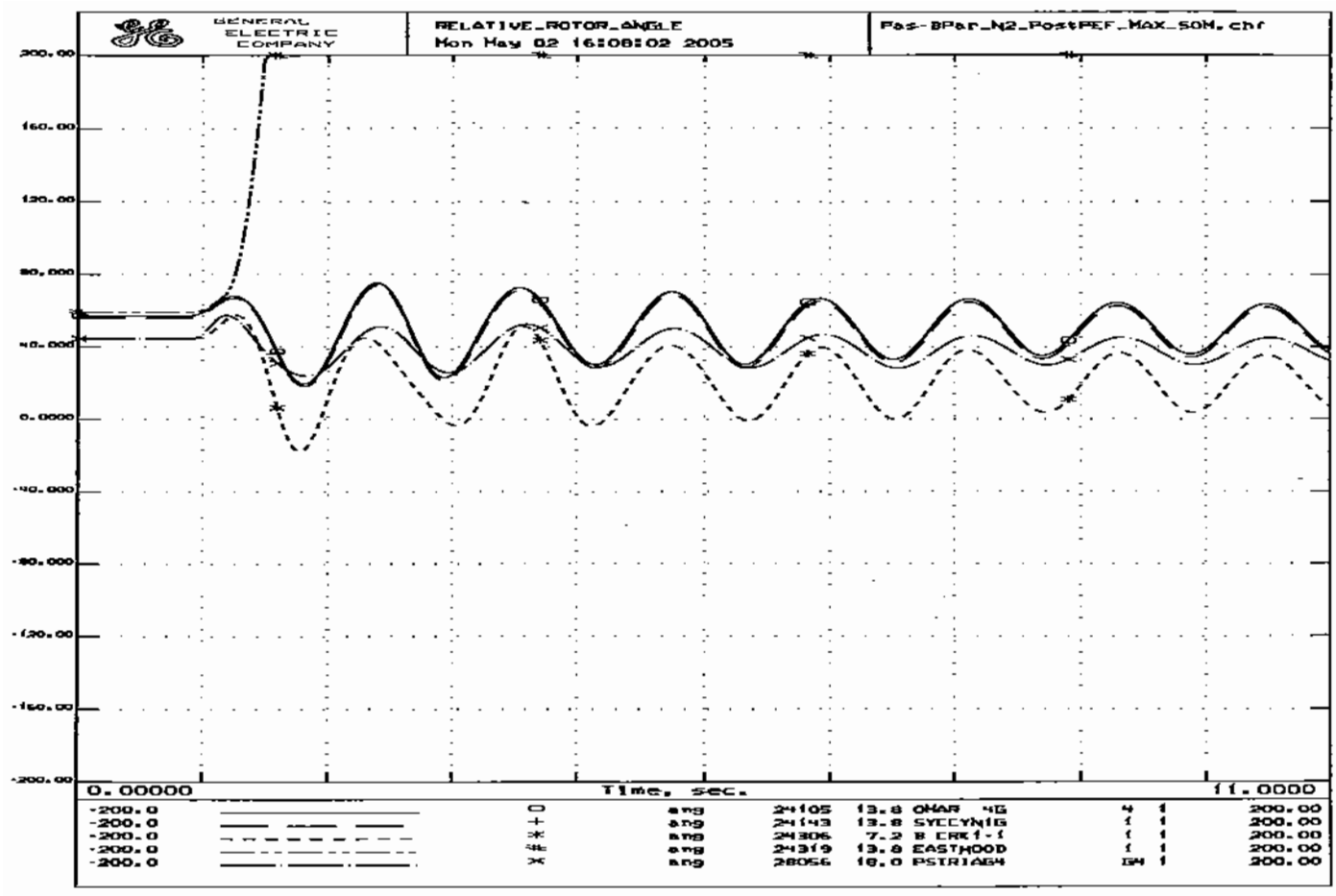
GENERAL ELECTRIC COMPANY
RELATIVE_ROTOR_ANGLE
Mon May 02 16:08:02 2005
Fas-BPar_N2_PostPEF_MAX_50M.chf
200.00
160.00
120.00
80.000
40.000
0.0000
-40.000
-80.000
-120.00
-160.00
-200.00
0.00000
Time, sec.
11.0000
-200.0 ang 24105 13.8 OMAR 4G 4 1 200.00
-200.0 ang 24143 13.8 SYCCYNIG 1 1 200.00
-200.0 ang 24306 7.2 B ERK1-1 1 1 200.00
-200.0 ang 24319 13.8 EASTWOOD 1 1 200.00
-200.0 ang 28056 18.0 PSTRIAGH 84 1 200.00

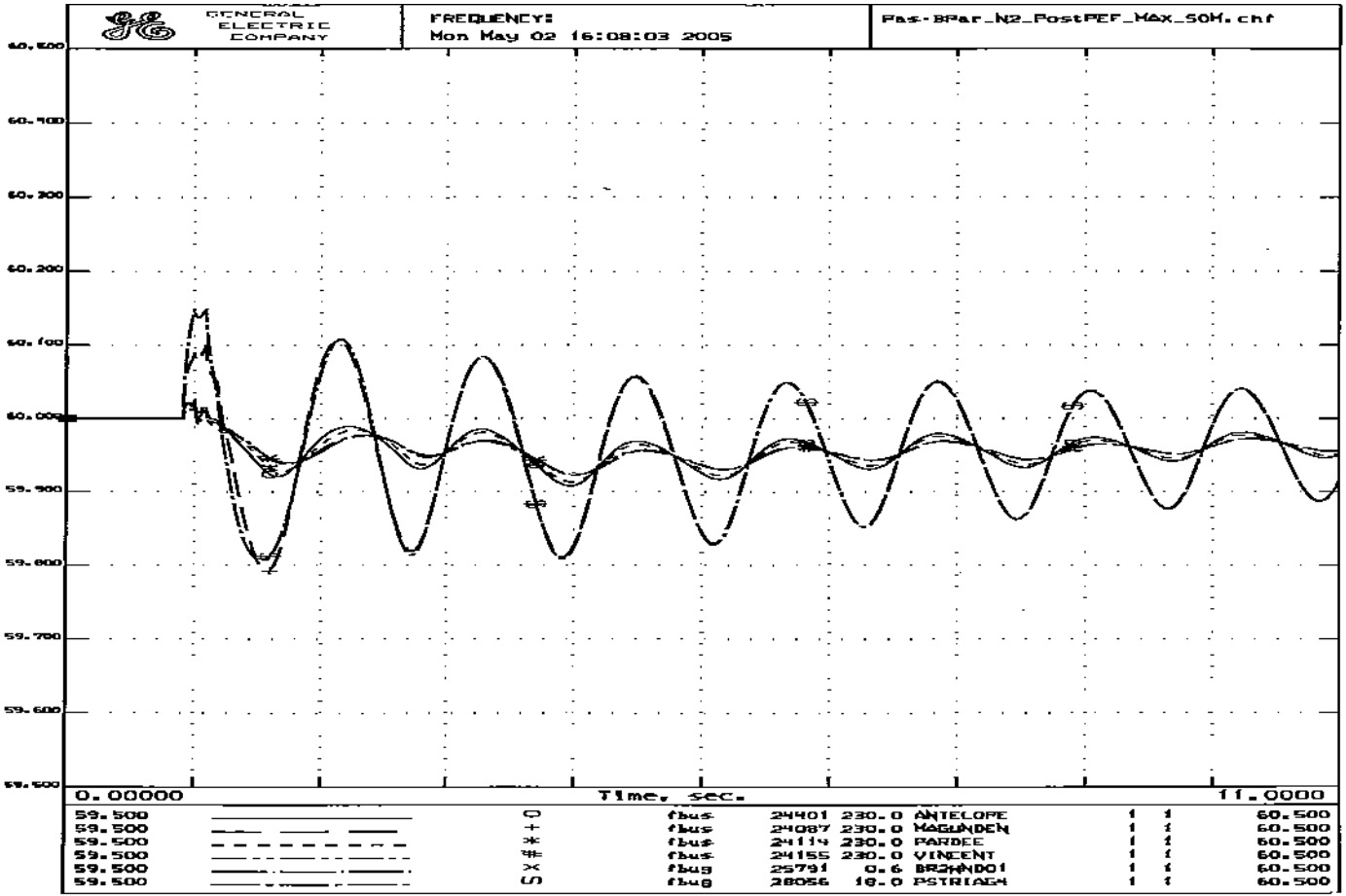
GENERAL ELECTRIC COMPANY
FREQUENCY:
Mon May 02 16:08:03 2005
Pas-BPar_N2_PostPEF_MAX_SOM.chf
60.500
60.400
60.300
60.200
60.100
60.000
59.900
59.800
59.700
59.600
59.500
0.00000
Time, sec.
11.0000
59.500 ○ fbus 24401 230.0 ANTELOPE 1 1 60.500
59.500 + fbus 24087 230.0 MAGUNDEN 1 1 60.500
59.500 * fbus 24114 230.0 PARDEE 1 1 60.500
59.500 # fbus 24155 230.0 VINCENT 1 1 60.500
59.500 × fbus 25791 0.6 BRZHNDO1 1 1 60.500
59.500 ◊ fbus 28056 18.0 PSTRIAG4 1 1 60.500

```
PostPEF_MAX_SOM.sav
PostPSF.dyd
TITLE
Calpine Pastoria Addition Stability Study: Loss of Two 230-kV Lines
6-CYCLE 1-Phase Fault at Pastoria 230kV Bus
N-2 OUTAGE: Magunden-Pastoria No.1 and No.3 230kV Line
SYSTEM STABILITY CASE - Pas-Ma_N2_PostPEF_MAX_SOM.swt
PostPEP_MAX_SOM.sav + PostPEP.dyd + Pas-Ma_N2_PostPEF_MAX_SOM.swt
RUN 10.0
CC
CC   ***Calpine Pastoria Addition DYNAMIC STABILITY ASSESSMENT***
CC   APPLY A 1-PHASE-TO-GROUND FAULT ON THE PASTORIA 230-KV BUS
FB   0.0 "PASTORIA" 230  0.00172 0.02058
CC
CC   CLEAR FAULT IN 6 CYCLES
CFB  6.0 "PASTORIA" 230
CC
CC   REMOVE MAGUNDEN-ANTELOPE NO.1 230-KV LINE
DL   6.0 "MAGUNDEN" 230. "PASTORIA" 230. "1 "
CC
CC   REMOVE MAGUNDEN-ANTELOPE NO.3 230-KV LINE
DL   6.0 "MAGUNDEN" 230. "PASTORIA" 230. "3 "
CC
CC   INITIATE SEL-68 STABILITY TRIP
TG   18.0 "MAMOTH1G" 13.80 "1 "
TG   18.0 "MAMOTH2G" 13.80 "2 "
TG   18.0 "BASTWOOD" 13.80 "1 "
```

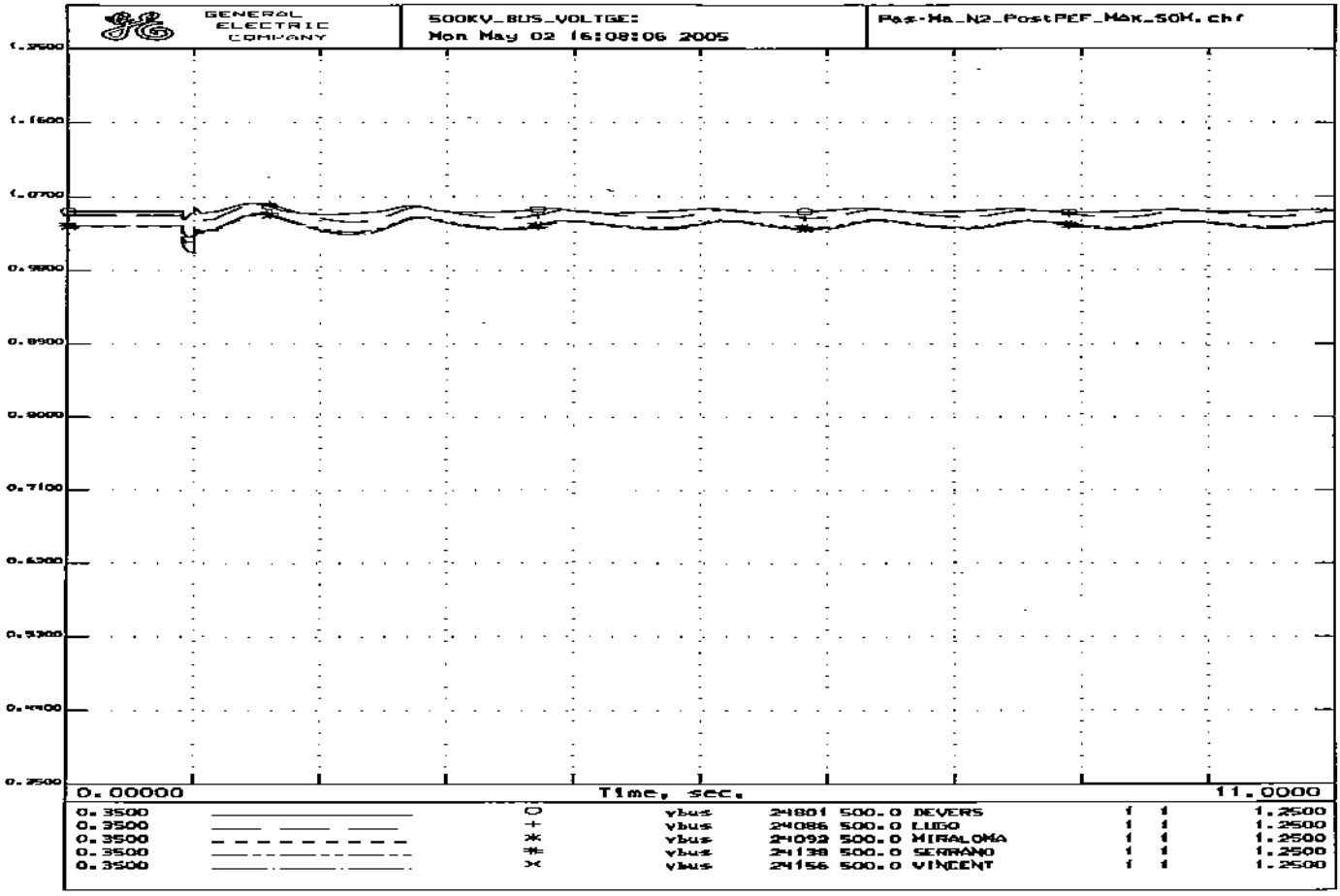
GENERAL ELECTRIC COMPANY
500KV_BUS_VOLTGE:
Mon May 02 16:08:06 2005
Pa3-Ma_N2_PostPEF_MAX_SOM.chf
1.2500
1.1600
1.0700
0.9800
0.8900
0.8000
0.7100
0.6200
0.5300
0.4400
0.2500
0.00000
Time, sec.
11.0000
0.3500 O vbus 24801 500.0 DEVERS 1 1 1.2500
0.3500 + vbus 24086 500.0 LUGO 1 1 1.2500
0.3500 * vbus 24092 500.0 MIRALOMA 1 1 1.2500
0.3500 * vbus 24138 500.0 SERRANO 1 1 1.2500
0.3500 * vbus 24156 500.0 VINCENT 1 1 1.2500

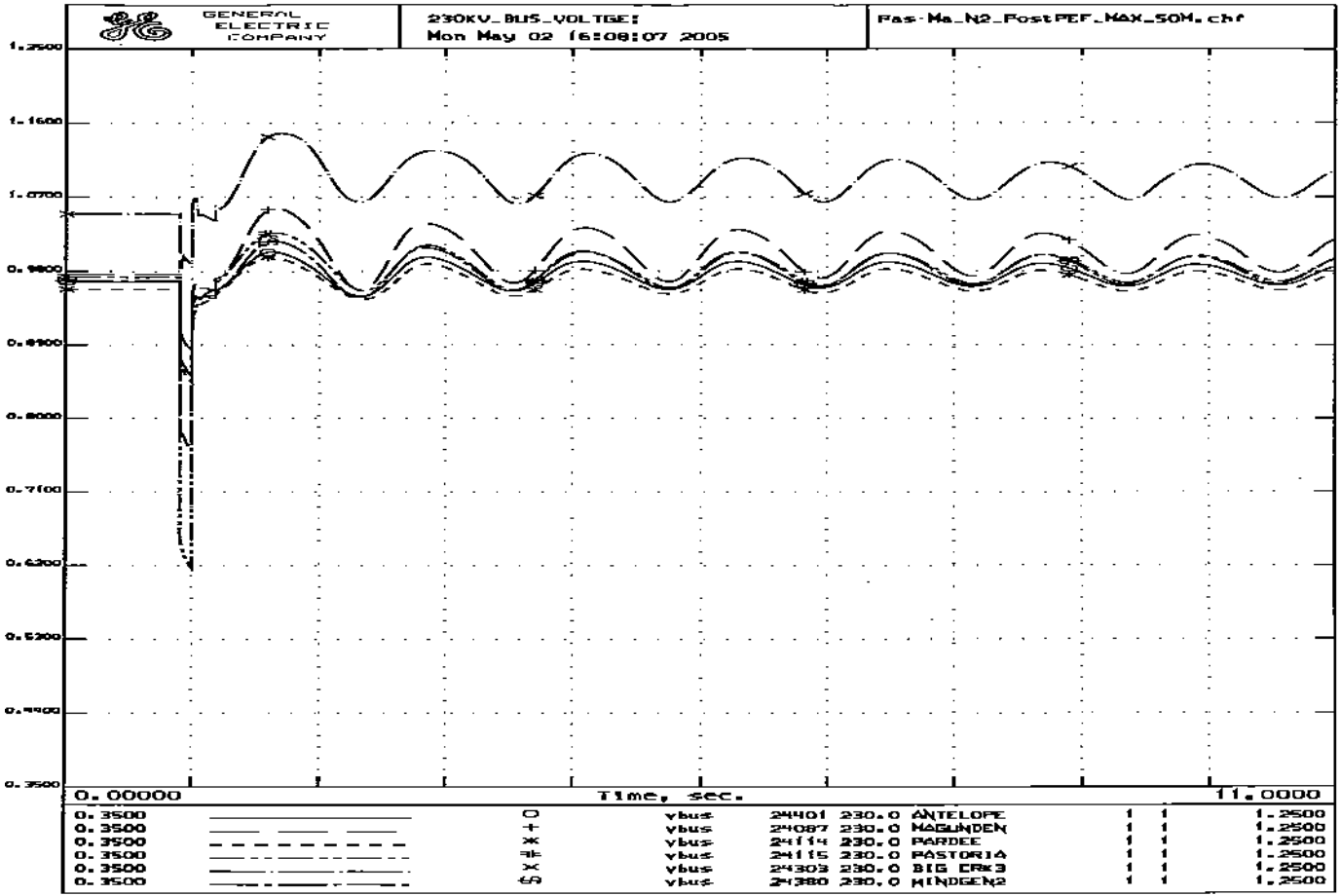
GENERAL ELECTRIC COMPANY
230KV_BUS_VOLTGE:
Mon May 02 16:08:07 2005
Pas-Ma_N2_PostPEF_MAX_50M.chf
1.2500
1.1600
1.0700
0.9800
0.8900
0.8000
0.7100
0.6200
0.5300
0.4400
0.3500
0.00000
Time, sec.
11.0000
0.3500 ○ vbus 24401 230.0 ANTELOPE 1 1 1.2500
0.3500 + vbus 24087 230.0 MAGUNDEN 1 1 1.2500
0.3500 × vbus 24114 230.0 PARDEE 1 1 1.2500
0.3500 vbus 24115 230.0 PASTORIA 1 1 1.2500
0.3500 × vbus 24303 230.0 BIG CRK3 1 1 1.2500
0.3500 vbus 24380 230.0 MINDGEN2 1 1 1.2500

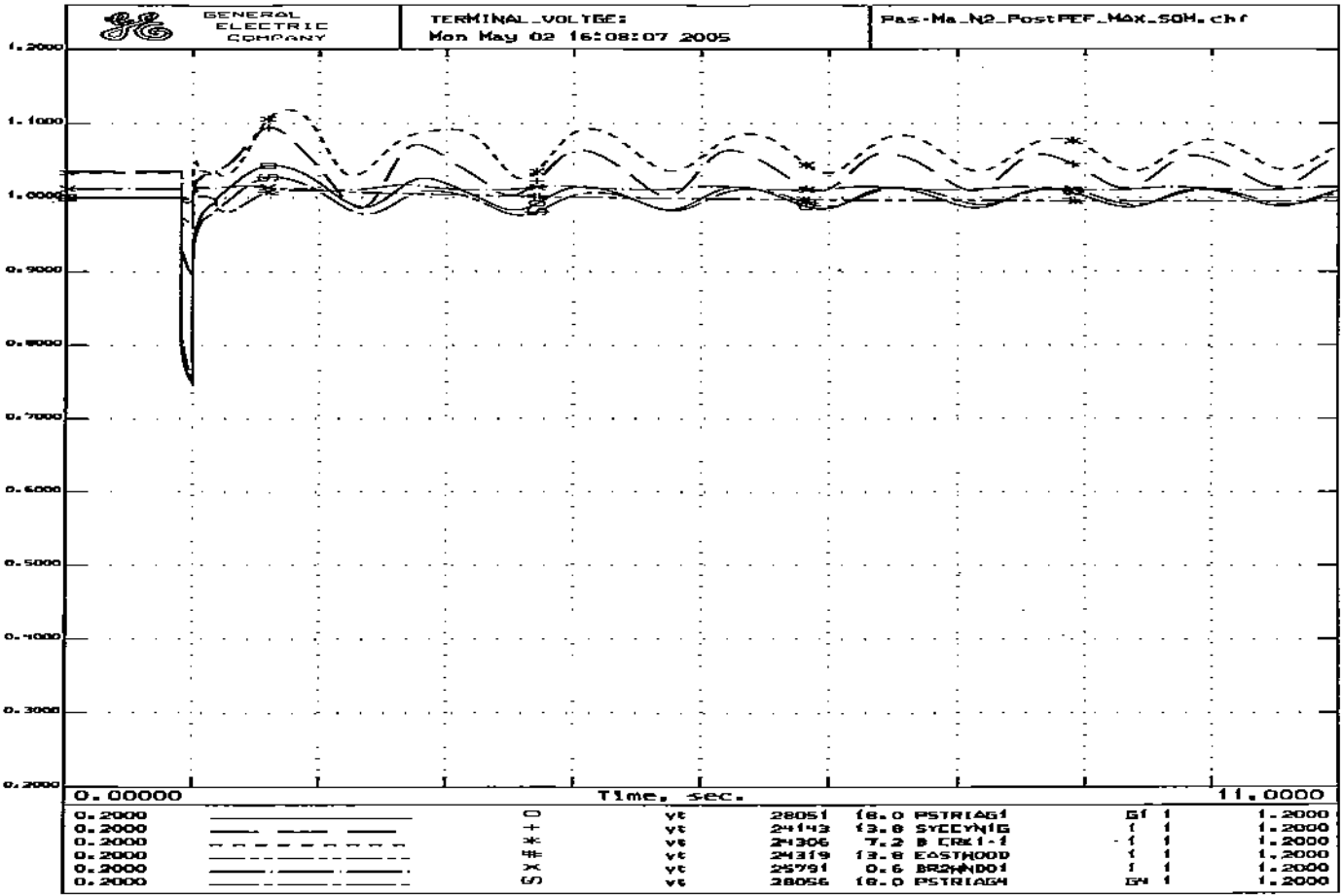
GENERAL ELECTRIC COMPANY
TERMINAL_VOLTGE:
Mon May 02 16:08:07 2005
Pas-Ma_N2_PostPEF_MAX_SOH.chf
1.2000
1.1000
1.0000
0.9000
0.8000
0.7000
0.6000
0.5000
0.4000
0.3000
0.2000
0.00000
Time, sec.
11.0000
0.2000 ○ vt 28051 (8.0 PSTRIAG1 GT 1 1.2000
0.2000 + vt 24143 (3.8 SYCCYNIG 1 1 1.2000
0.2000 * vt 24306 7.2 B CRK1-1 1 1 1.2000
0.2000 # vt 24319 (3.8 EASTWOOD 1 1 1.2000
0.2000 × vt 25791 0.6 BR2WNDO1 1 1 1.2000
0.2000 ⊕ vt 28056 (8.0 PSTRIAG4 GN 1 1.2000

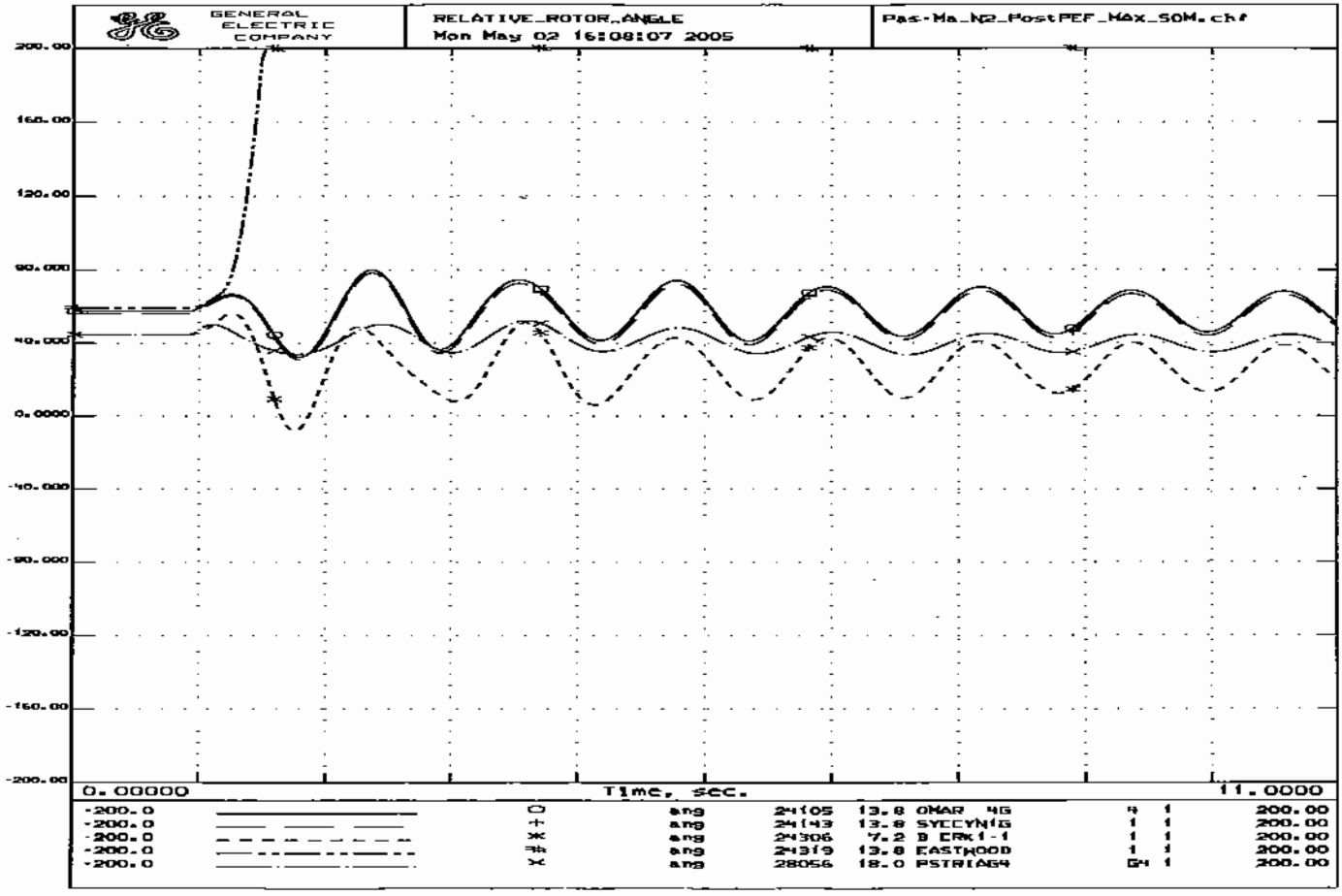
GENERAL ELECTRIC COMPANY
RELATIVE_ROTOR_ANGLE
Mon May 02 16:08:07 2005
Pas-Ma_N2_PostPEF_Max_SOM.chf
200.00
160.00
120.00
80.000
40.000
0.0000
-40.000
-80.000
-120.00
-160.00
-200.00
0.00000
Time, sec.
11.0000
-200.0 ○ ang 24105 13.8 OMAR 4G 4 1 200.00
-200.0 + ang 24143 13.8 SYECYN1G 1 1 200.00
-200.0 ✱ ang 24306 7.2 B ERK1-1 1 1 200.00
-200.0 # ang 24319 13.8 EASTWOOD 1 1 200.00
-200.0 × ang 28056 18.0 PSTRIAG4 G4 1 200.00

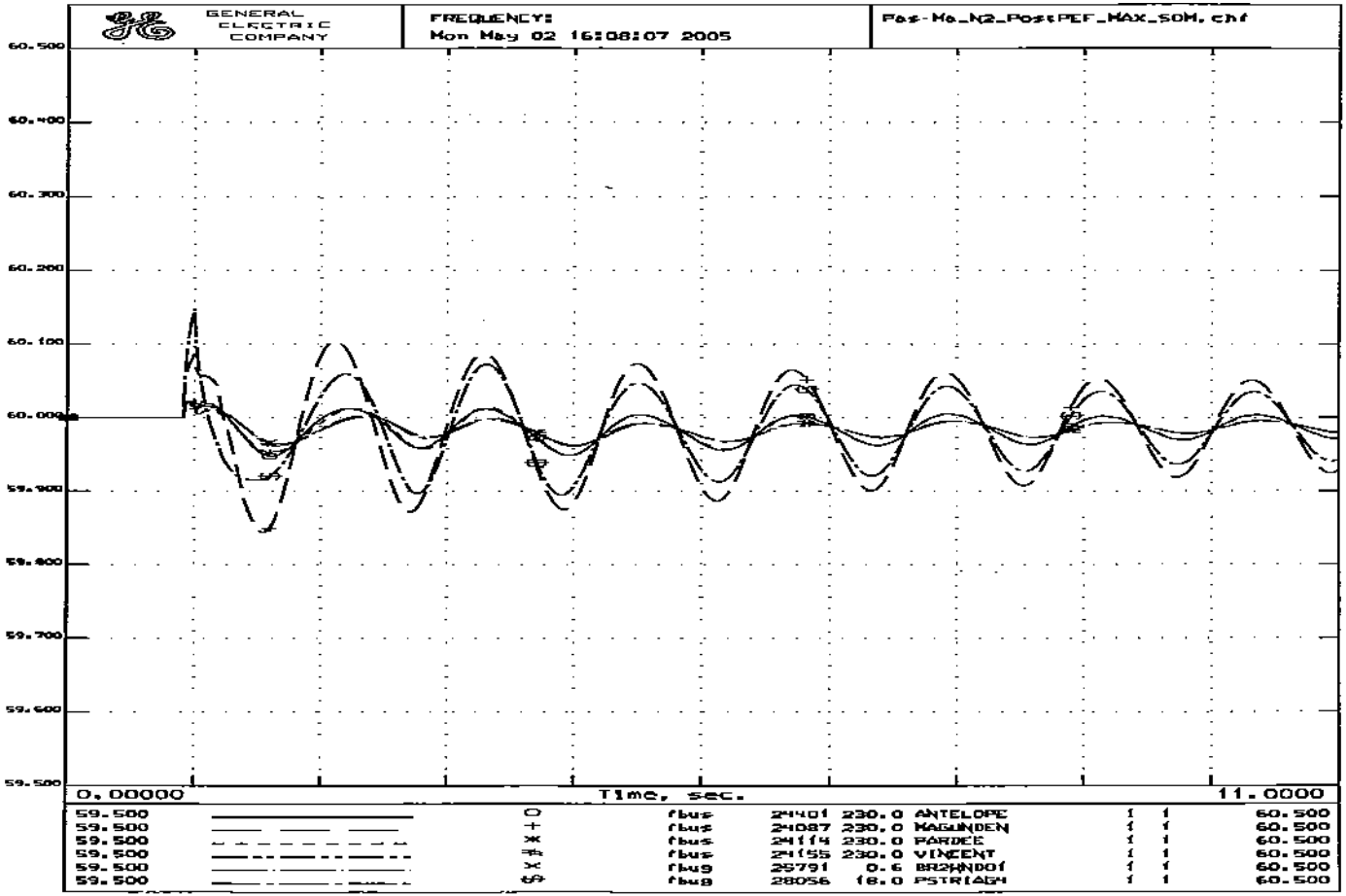
GENERAL ELECTRIC COMPANY
FREQUENCY:
Mon May 02 16:08:07 2005
Fas-Ma_N2_Post:PEF_MAX_SOM.chf
60.500
60.400
60.300
60.200
60.100
60.000
59.900
59.800
59.700
59.600
59.500
0.00000
Time, sec.
11.0000
59.500 ○ fbus 24401 230.0 ANTELOPE 1 1 60.500
59.500 + fbus 24087 230.0 MAGUNDEN 1 1 60.500
59.500 ✱ fbus 24114 230.0 PARDEE 1 1 60.500
59.500 ✱ fbus 24155 230.0 VINCENT 1 1 60.500
59.500 ✱ fbus 25791 0.6 BRAHNDOI 1 1 60.500
59.500 ✱ fbus 28056 18.0 PSTRIAGH 1 1 60.500

```
PostPEF_MAX_SOM.sav
PostPEF.dyd
TITLE
Calpine Pastoria Addition Stability Study: Loss of Two 230-kV Lines
6-CYCLE 1-Phase Fault at Pastoria 230kV Bus
N-2 OUTAGE: Pardee-Pastoria and Pardee-Pastoria-Warne 230kV Lines
SYSTEM STABILITY CASE -.Pas-PPW_N2_PostPEF_MAX_SOM.swt
PostPEF_MAX_SOM.sav + PostPEF.dyd + Pas-PPW_N2_PostPEF_MAX_SOM.swt
RUN 10.0
CC
CC   ***Calpine Pastoria Addition DYNAMIC STABILITY ASSESSMENT***
CC   APPLY A 1-PHASE-TO-GROUND FAULT ON THE PASTORIA 230-KV BUS
FB   0.0 "PASTORIA" 230  0.00172 0.02058
CC
CC   CLEAR FAULT IN 6 CYCLES
CFB  6.0 "PASTORIA" 230
CC
CC   REMOVE PARDEE-PASTORIA 230-KV LINE
DL   6.0 "PARDEE   " 230. "PASTORIA" 230. "1 "
CC
CC   REMOVE PARDEE-PASTORIA-WARNE 230-KV LINE
TG   6.0 "WARNE1   " 13.80 "1 "
TG   6.0 "WARNE2   " 13.80 "1 "
DL   6.0 "PARDEE   " 230. "WARNETAP" 230. "1 "
DL   6.0 "WARNE    " 230. "WARNETAP" 230. "1 "
DL   6.0 "PASTORIA" 230. "WARNETAP" 230. "1 "
CC
CC   IMPLEMENT PEF SPECIAL PROTECTION SCHEME FOR N-2
TG   12.0 "PSTRIAS1" 18.00 "S1"
TG   12.0 "PSTRIAG1" 18.00 "G1"
TG   12.0 "PSTRIAG2" 18.00 "G2"
TG   12.0 "PSTRIAS2" 18.00 "S2"
TG   12.0 "PSTRIAG3" 18.00 "G3"
CC
CC   INITIATE SEL-68 STABILITY TRIP
TG   18.0 "MAMOTH1G" 13.80 "1 "
TG   18.0 "MAMOTH2G" 13.80 "2 "
TG   18.0 "EASTWOOD" 13.80 "1 "
```

GENERAL ELECTRIC COMPANY

500KV_BUS_VOLTGE:
Mon May 02 16:08:11 2005

Pas-PPH_N2_PostPEF_MAX_SOM.chf

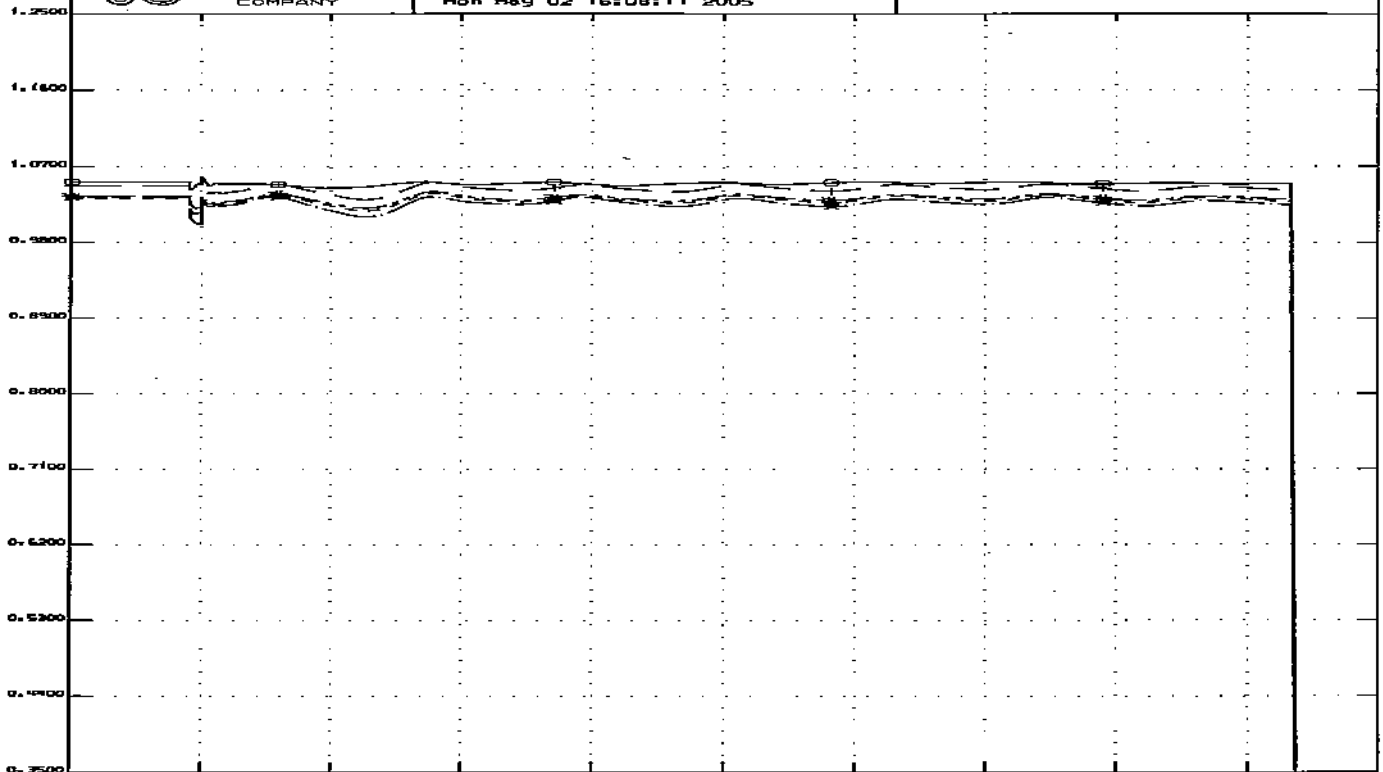

0.3500		O	vbus	24801	500.0	DEVERS	1	1	1.2500
0.3500		+	vbus	24086	500.0	LUGO	1	1	1.2500
0.3500		*	vbus	24092	500.0	MIRALOMA	1	1	1.2500
0.3500		⊗	vbus	24138	500.0	SERRANO	1	1	1.2500
0.3500		X	vbus	24156	500.0	VINCENT	1	1	1.2500

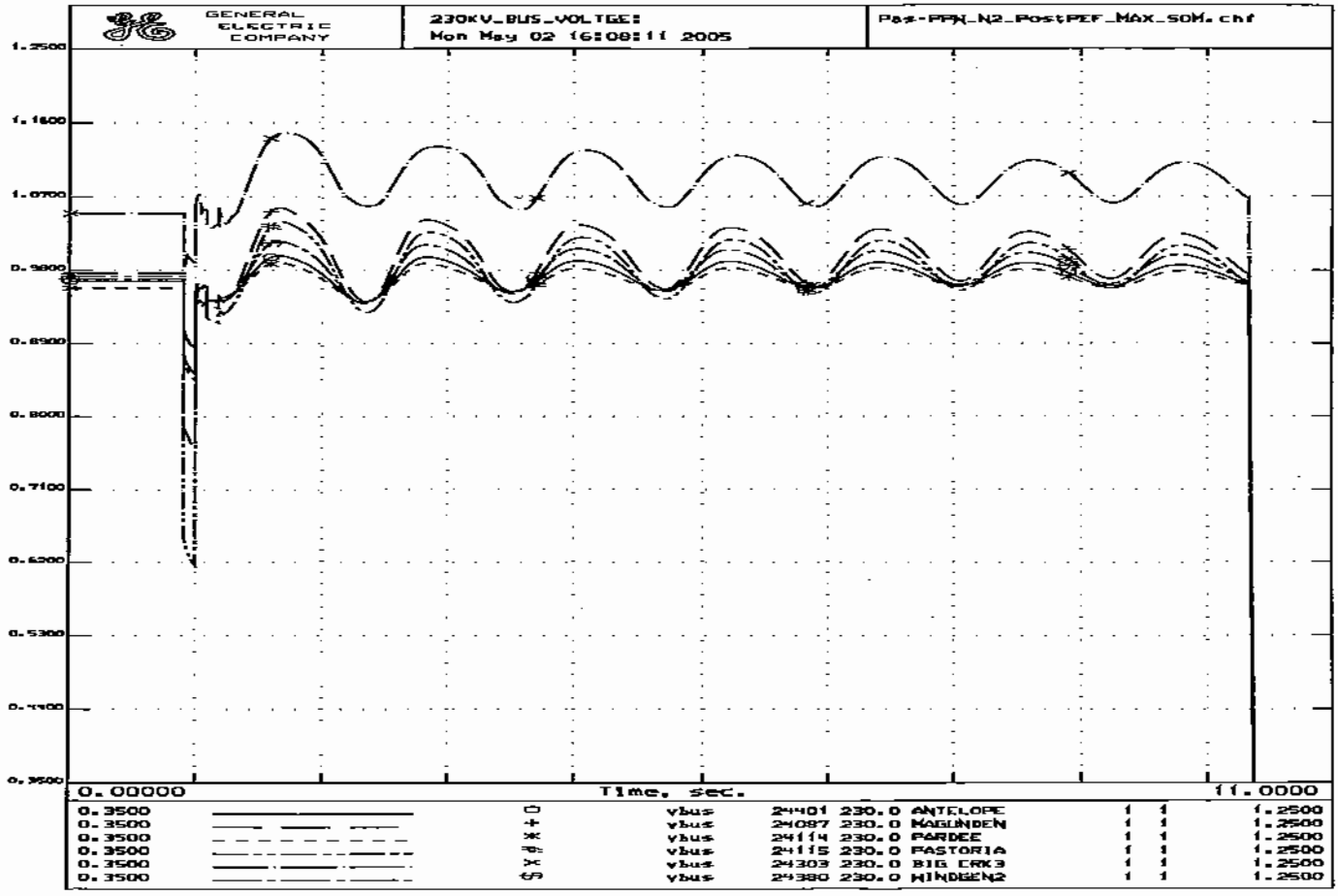
GENERAL ELECTRIC COMPANY
230KV_BUS_VOLTGE:
Mon May 02 16:08:11 2005
P&X-PPN_N2_PostPEF_MAX_SOM.chf
1.2500
1.1600
1.0700
0.9800
0.8900
0.8000
0.7100
0.6200
0.5300
0.4400
0.3500
0.00000
Time, sec.
11.0000
0.3500 ○ vbus 24401 230.0 ANTELOPE 1 1 1.2500
0.3500 + vbus 24087 230.0 MAGUNDEN 1 1 1.2500
0.3500 * vbus 24114 230.0 PARDEE 1 1 1.2500
0.3500 vbus 24115 230.0 PASTORIA 1 1 1.2500
0.3500 × vbus 24303 230.0 BIG CRK3 1 1 1.2500
0.3500 vbus 24380 230.0 WINDGEN2 1 1 1.2500

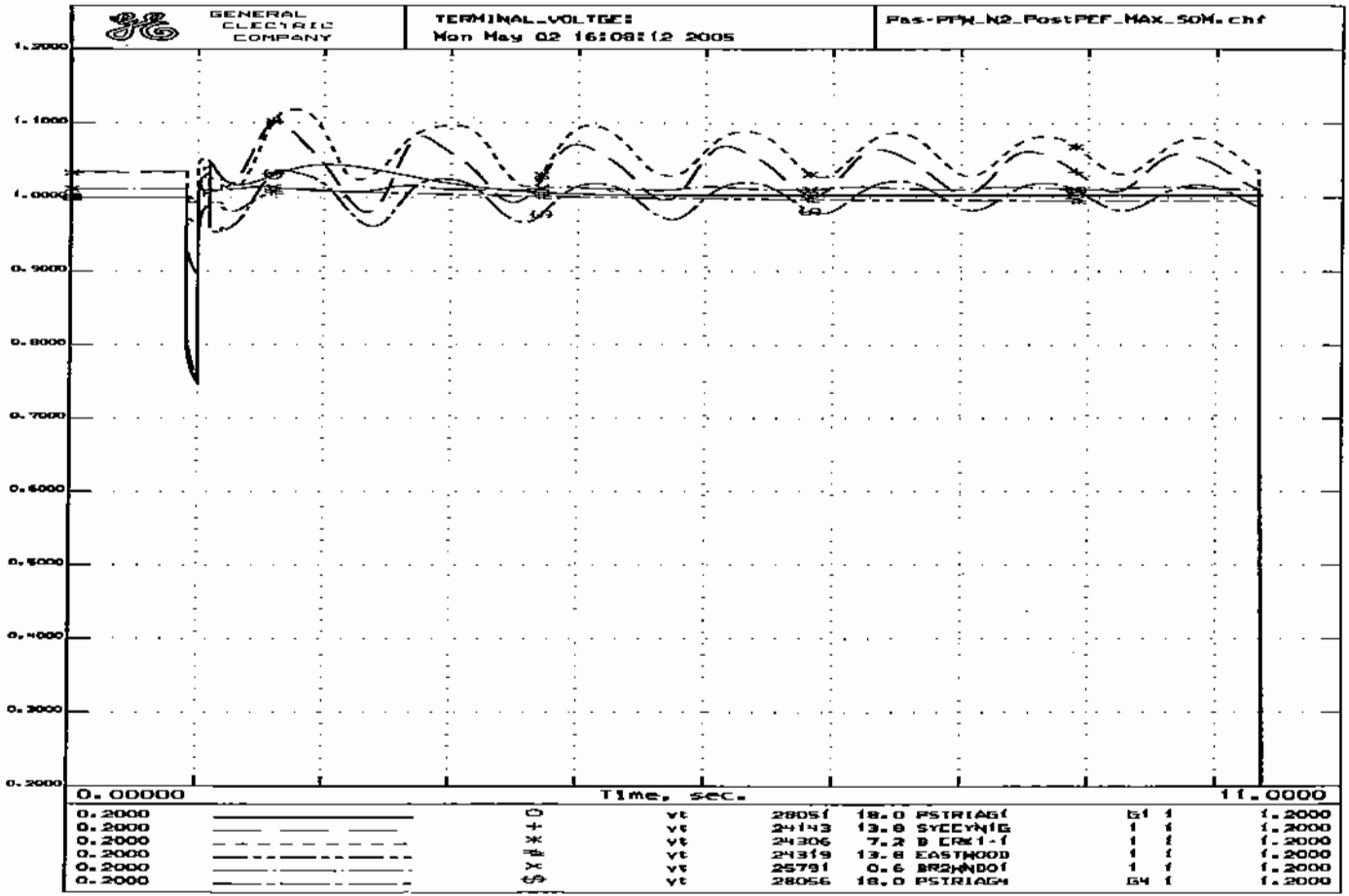
GENERAL ELECTRIC COMPANY
TERMINAL_VOLTGE:
Mon May 02 16:08:12 2005
Pas-PTW_N2_PostPEF_MAX_50M.chf
1.2000
1.1000
1.0000
0.9000
0.8000
0.7000
0.6000
0.5000
0.4000
0.3000
0.2000
0.00000
Time, sec.
11.0000
0.2000 O vt 28051 18.0 PSTRIAG1 G1 1 1.2000
0.2000 + vt 24143 13.8 SYCCYNIG 1 1 1.2000
0.2000 * vt 24306 7.2 B CRK1-1 1 1 1.2000
0.2000 # vt 24319 13.8 EASTWOOD 1 1 1.2000
0.2000 x vt 25791 0.6 BR2WNDO1 1 1 1.2000
0.2000 $ vt 28056 18.0 PSTRIAG4 G4 1 1.2000

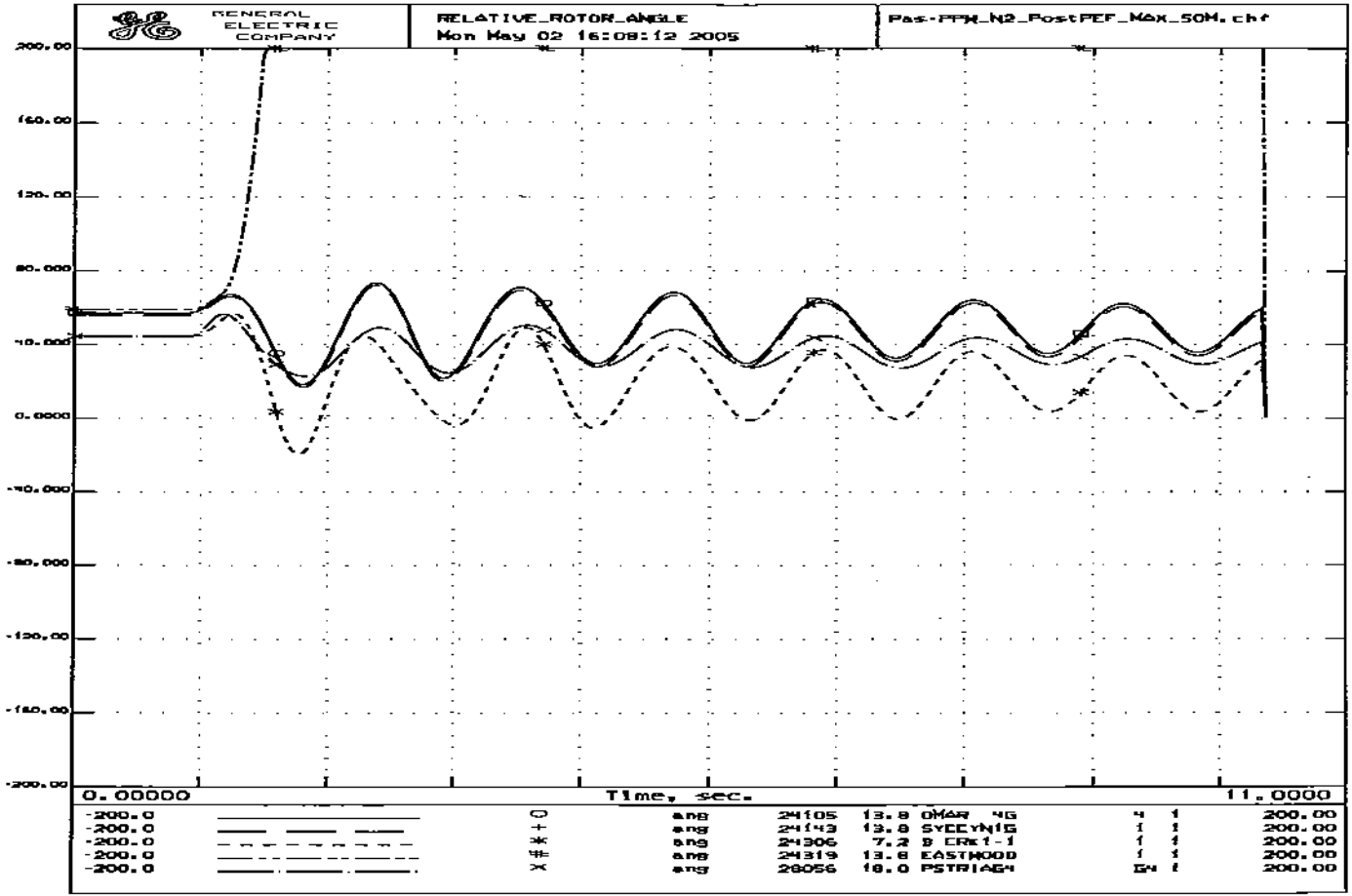
GENERAL ELECTRIC COMPANY
RELATIVE_ROTOR_ANGLE
Mon May 02 16:08:12 2005
Pas-PPW_N2_PostPEF_Max_50M.chf
200.00
160.00
120.00
80.000
40.000
0.0000
-40.000
-80.000
-120.00
-160.00
-200.00
0.00000
Time, sec.
11.0000
-200.0 ang 24105 13.8 OMAR 4G 4 1 200.00
-200.0 ang 24143 13.8 SYCCYN1G 1 1 200.00
-200.0 ang 24306 7.2 B CRK1-1 1 1 200.00
-200.0 ang 24319 13.8 EASTWOOD 1 1 200.00
-200.0 ang 28056 18.0 PSTRIAG4 G4 1 200.00

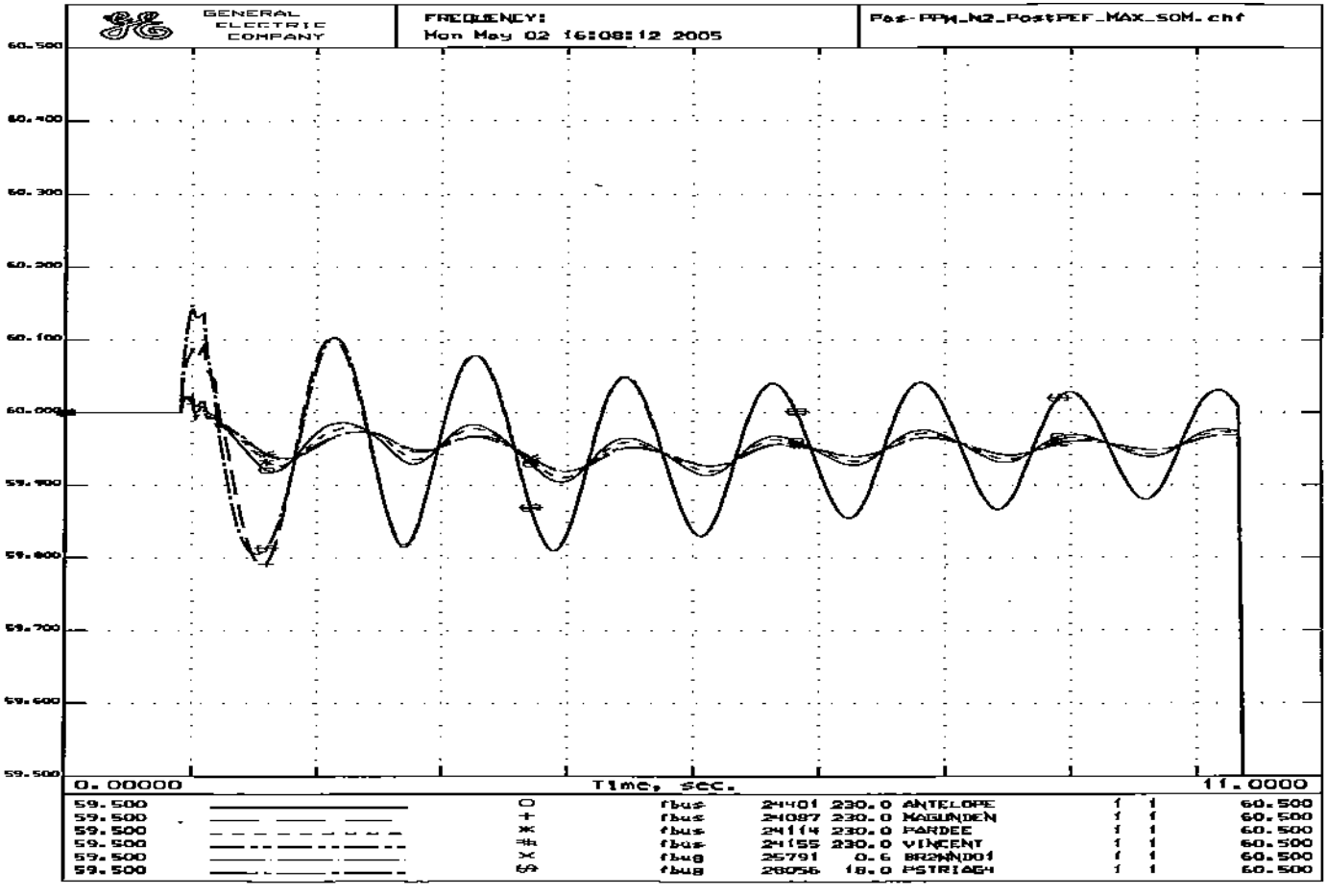
GENERAL ELECTRIC COMPANY
FREQUENCY:
Mon May 02 16:08:12 2005
Fas-PPM_N2_PostPEF_MAX_SOM.chf
60.500
60.400
60.300
60.200
60.100
60.000
59.900
59.800
59.700
59.600
59.500
0.00000
Time, sec.
11.0000
59.500 O fbus 24401 230.0 ANTELOPE 1 1 60.500
59.500 + fbus 24087 230.0 MAGUNDEN 1 1 60.500
59.500 * fbus 24114 230.0 PARDEE 1 1 60.500
59.500 # fbus 24155 230.0 VINCENT 1 1 60.500
59.500 X fbug 25791 0.6 BRPWND01 1 1 60.500
59.500 fbug 28056 18.0 PSTRIAG4 1 1 60.500

```
PostPEF_MAX_SOM.sav
PostPEF.dyd
TITLE
Calpine Pastoria Addition Stability Study: Loss of Two 230-kV Lines
6-CYCLE 1-Phase Fault at Pardee 230kV Bus
N-2 OUTAGE: Pardee-Bailey and Pardee-Pastoria 230kV Lines
SYSTEM STABILITY CASE -.P-BPas_N2_PostPEF_MAX_SOM.swt
PostPEF_MAX_SOM.sav + PostPEF.dyd + P-BPas_N2_PostPEF_MAX_SOM.swt
RUN 10.0
CC
CC   ***Calpine Pastoria Addition DYNAMIC STABILITY ASSESSMENT***
CC   APPLY A 1-PHASE-TO-GROUND FAULT ON THE PARDEE 230-KV BUS
FB   0.0 "PARDEE   " 230   0.00126 0.01595
CC
CC   CLEAR FAULT IN 6 CYCLES
CFB  6.0 "PARDEE   " 230
CC
CC   REMOVE PARDEE-BAILEY 230-KV LINE
DL   6.0 "PARDEE   " 230. "BAILEY   " 230. "1 "
CC
CC   REMOVE PARDEE-PASTORIA 230-KV LINE
DL   6.0 "PARDEE   " 230. "PASTORIA" 230. "1 "
CC
CC   IMPLEMENT PEF SPECIAL PROTECTION SCHEME FOR N-2
TG   12.0 "PSTRIAS1" 18.00 "S1"
TG   12.0 "PSTRIAG1" 18.00 "G1"
TG   12.0 "PSTRIAG2" 18.00 "G2"
TG   12.0 "PSTRIAS2" 18.00 "S2"
TG   12.0 "PSTRIAG3" 18.00 "G3"
CC
CC   INITIATE SEL-68 STABILITY TRIP
TG   18.0 "MAMOTH1G" 13.80 "1 "
TG   18.0 "MAMOTH2G" 13.80 "2 "
TG   18.0 "EASTWOOD" 13.80 "1 "
```

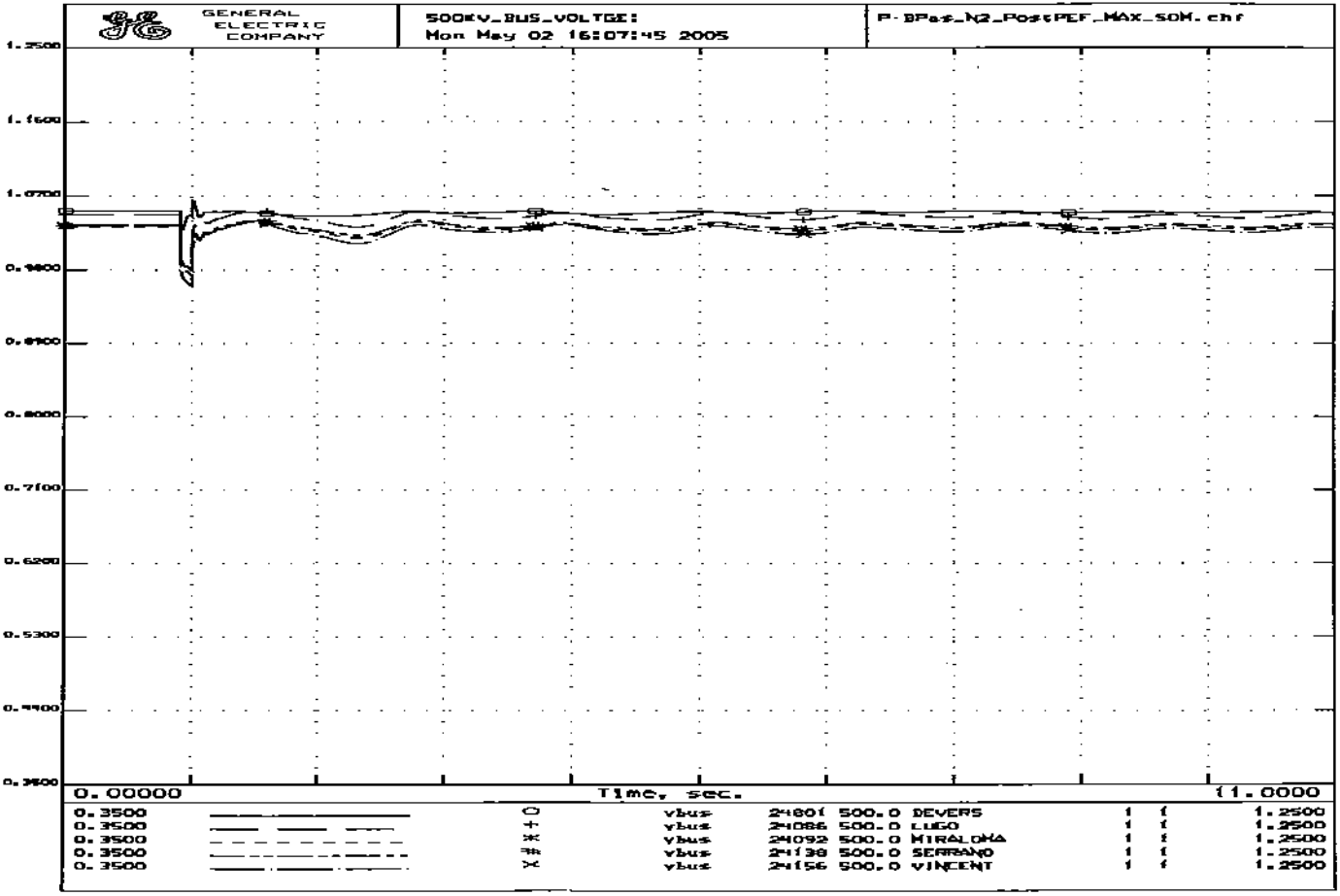
GENERAL ELECTRIC COMPANY
500KV_BUS_VOLTGE:
Mon May 02 16:07:45 2005
P-BPa1_N2_Post_PEF_MAX_SOM.chf
1.2500
1.1500
1.0500
0.9500
0.8500
0.7500
0.6500
0.5500
0.4500
0.3500
0.00000
Time, sec.
11.0000
0.3500 ○ vbus 24001 500.0 DEVERS 1 1 1.2500
0.3500 + vbus 24086 500.0 LUGO 1 1 1.2500
0.3500 * vbus 24092 500.0 MIRALOMA 1 1 1.2500
0.3500 # vbus 24138 500.0 SERRANO 1 1 1.2500
0.3500 x vbus 24156 500.0 VINCENT 1 1 1.2500

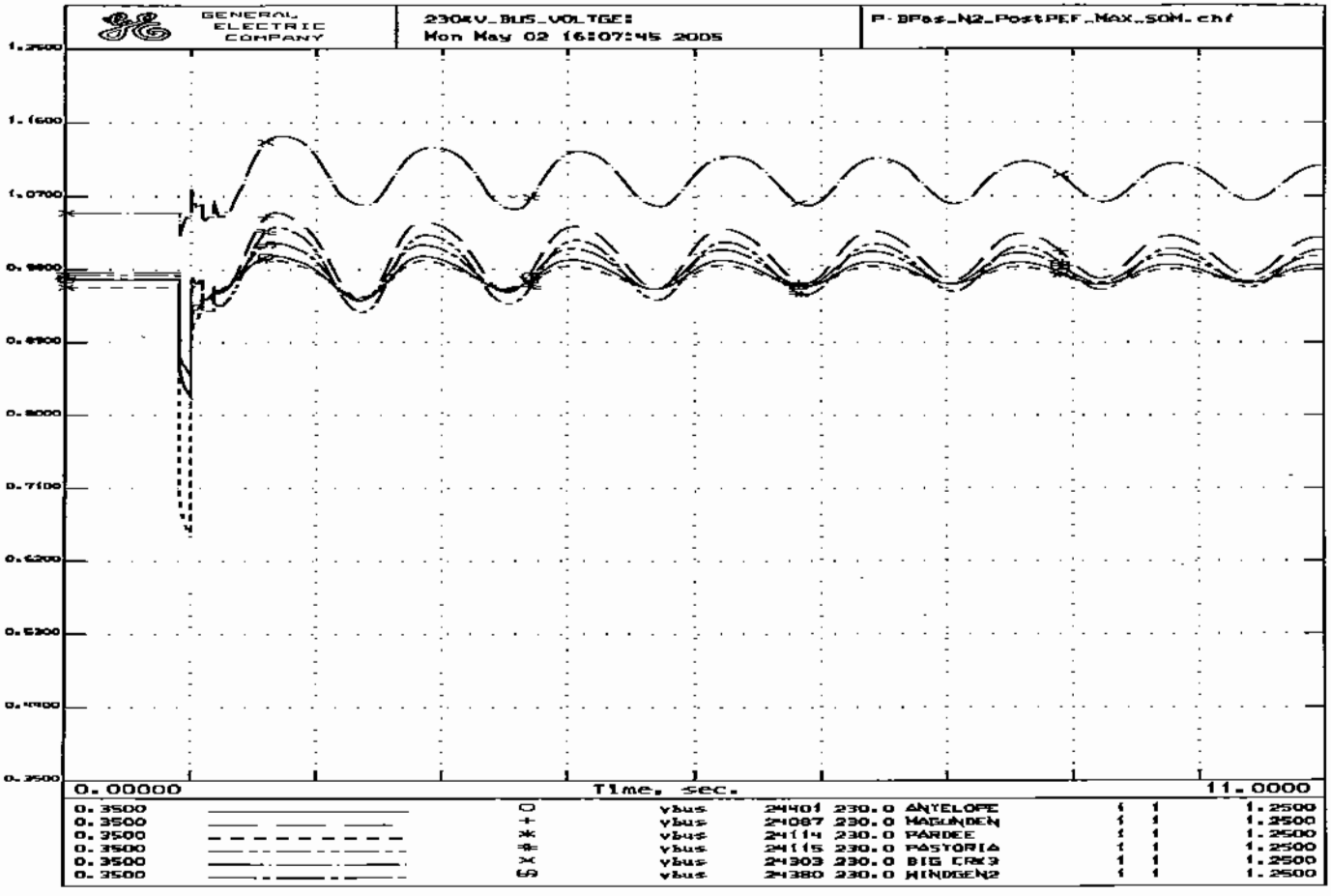
GENERAL ELECTRIC COMPANY
230kV_BUS_VOLTGE:
Mon May 02 16:07:45 2005
P-BPas_N2_PostPEF_MAX_SOM.chf
1.2500
1.1600
1.0700
0.9800
0.8900
0.8000
0.7100
0.6200
0.5300
0.4400
0.3500
0.00000
Time, sec.
11.0000
0.3500 O vbus 24401 230.0 ANTELOPE 1 1 1.2500
0.3500 + vbus 24087 230.0 MAGUNDEN 1 1 1.2500
0.3500 * vbus 24114 230.0 PARDEE 1 1 1.2500
0.3500 # vbus 24115 230.0 PASTORIA 1 1 1.2500
0.3500 X vbus 24303 230.0 BIG CRK3 1 1 1.2500
0.3500 S vbus 24380 230.0 MINDGEN2 1 1 1.2500

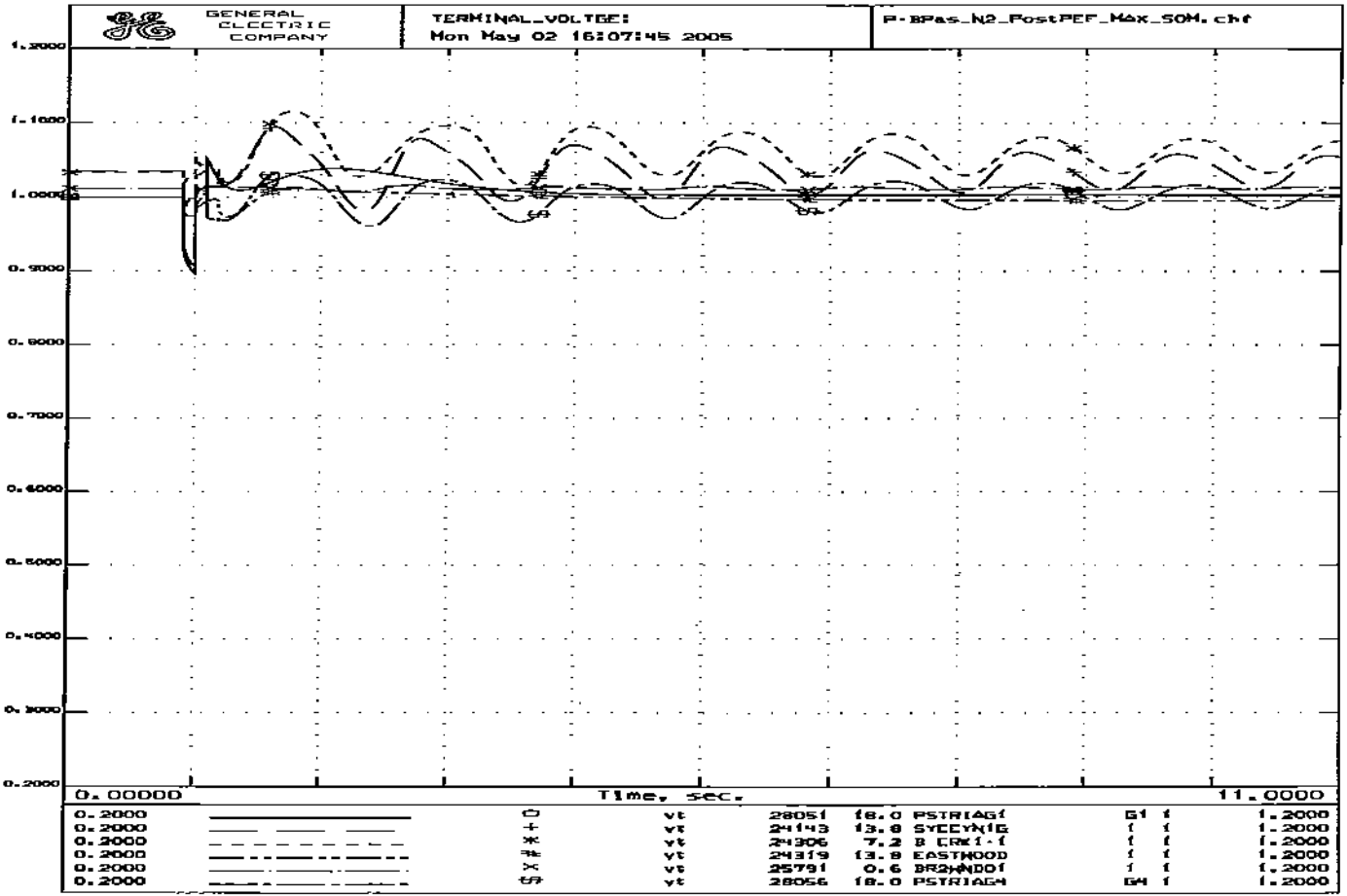
GENERAL ELECTRIC COMPANY
TERMINAL_VOLTGE:
Mon May 02 16:07:45 2005
P-BPas_N2_PostPEF_MAX_SOM.chf
1.2000
1.1000
1.0000
0.9000
0.8000
0.7000
0.6000
0.5000
0.4000
0.3000
0.2000
0.00000
Time, sec.
11.0000
0.2000 vt 28051 18.0 PSTRIAG1 G1 1 1.2000
0.2000 vt 24143 13.8 SYCCYN1G 1 1 1.2000
0.2000 vt 24306 7.2 B CRK1-1 1 1 1.2000
0.2000 vt 24319 13.8 EASTWOOD 1 1 1.2000
0.2000 vt 25791 0.6 BRANDO1 1 1 1.2000
0.2000 vt 28056 18.0 PSTRIAG4 G4 1 1.2000

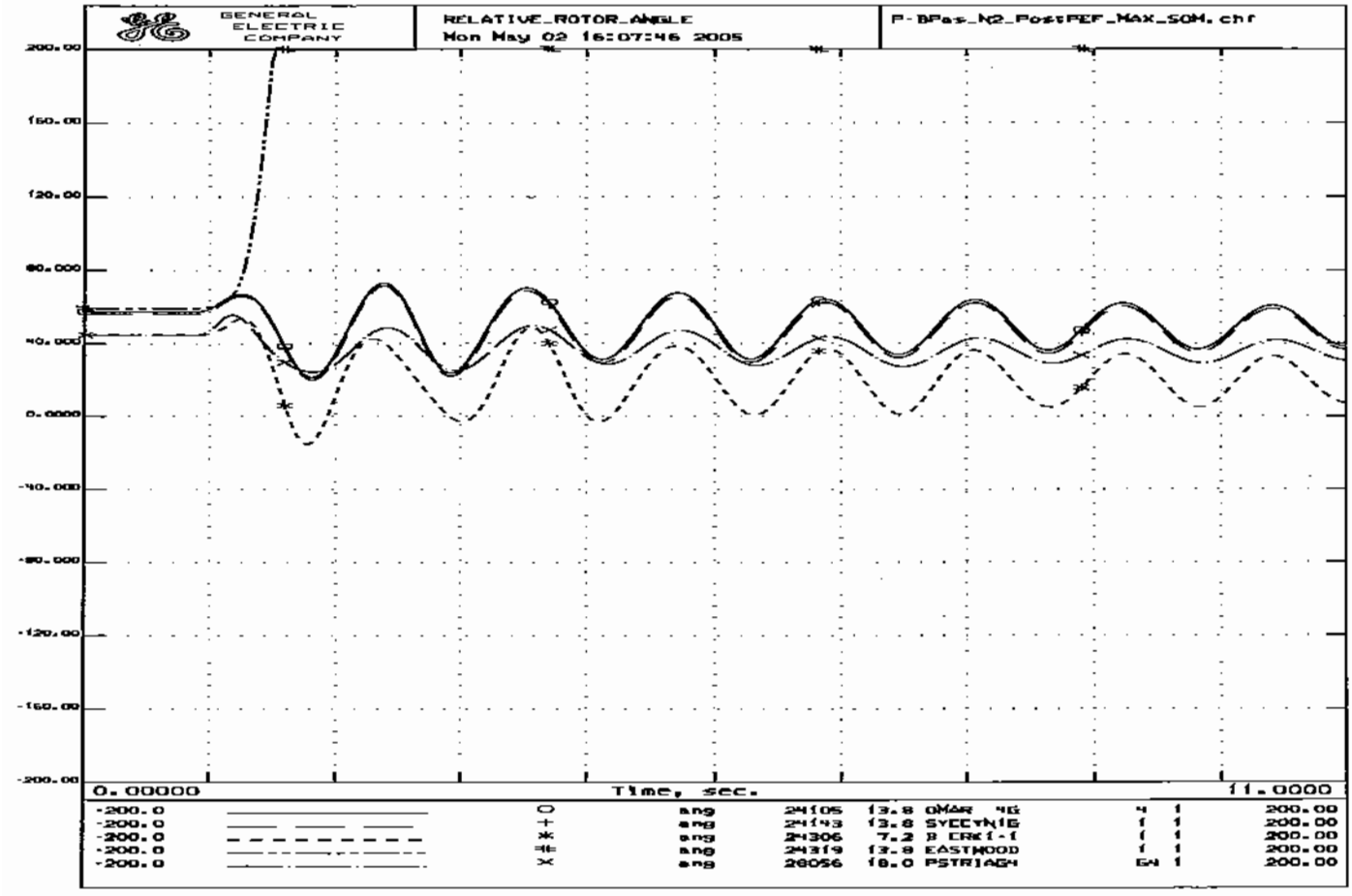
GENERAL ELECTRIC COMPANY
RELATIVE_ROTOR_ANGLE
Mon May 02 16:07:46 2005
P-BPas_N2_PostPEF_MAX_SOM.chr
200.00
160.00
120.00
80.000
40.000
0.0000
-40.000
-80.000
-120.00
-160.00
-200.00
0.00000
Time, sec.
11.0000
-200.0 ang 24105 13.8 OMAR 4G 4 1 200.00
-200.0 ang 24143 13.8 SYCCYN1G 1 1 200.00
-200.0 ang 24306 7.2 B ERK1-1 1 1 200.00
-200.0 ang 24319 13.8 EASTWOOD 1 1 200.00
-200.0 ang 28056 18.0 PSTRIAGH GN 1 200.00

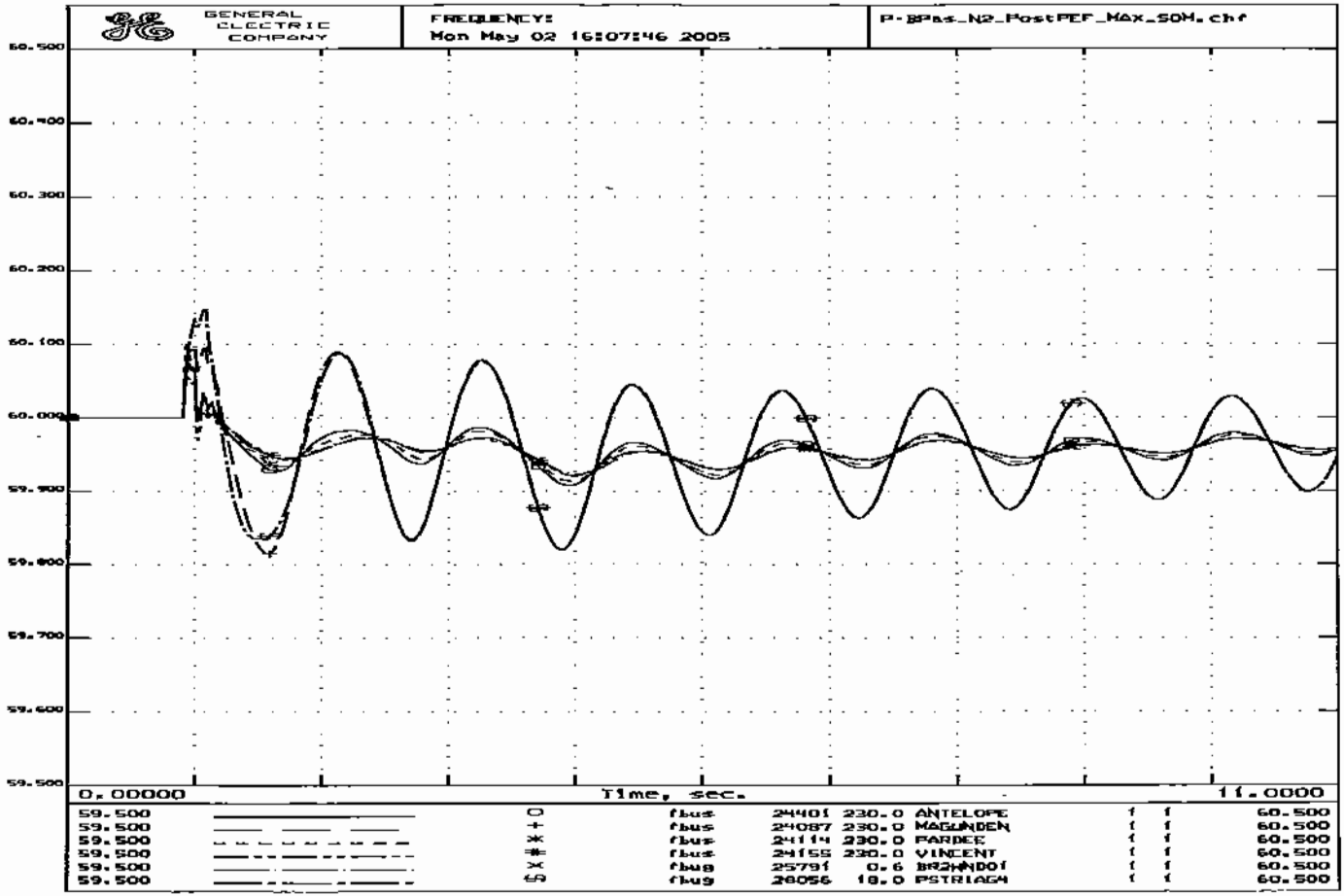
GENERAL ELECTRIC COMPANY
FREQUENCY:
Mon May 02 16:07:46 2005
P-BPas_N2_PostPEF_MAX_SOM.chf
60.500
60.400
60.300
60.200
60.100
60.000
59.900
59.800
59.700
59.600
59.500
0.00000
Time, sec.
11.0000
59.500 O fbus 24401 230.0 ANTELOPE f f 60.500
59.500 + fbus 24087 230.0 MAGUNDEN f f 60.500
59.500 * fbus 24114 230.0 PARDEE f f 60.500
59.500 # fbus 24155 230.0 VINCENT f f 60.500
59.500 X fbus 25791 0.6 BRANDOI f f 60.500
59.500 fbus 28056 18.0 PSTRIAG4 f f 60.500

```
PostPEF_MAX_SOM.sav
PostPEF.dyd
TITLE
Calpine Pastoria Addition Stability Study; Loss of Two 230-kV Lines
6-CYCLE 1-Phase Fault at Pardee 230kV Bus
N-2 OUTAGE: Pardee-Pastoria and Pardee-Pastoria-Warne 230kV Lines
SYSTEM STABILITY CASE -.P-PasPW_N2_PostPEF_MAX_SOM.swt
PostPEF_MAX_SOM.sav + PostPEF.dyd + P-PasPW_N2_PostPEF_MAX_SOM.swt
RUN 10.0
CC
CC   ***Calpine Pastoria Addition DYNAMIC STABILITY ASSESSMENT***
CC   APPLY A 1-PHASE-TO-GROUND FAULT ON THE PARDEE 230-KV BUS
FB   0.0 "PARDEE   " 230  0.00136 0.01595
CC
CC   CLEAR FAULT IN 6 CYCLES
CFB  6.0 "PARDEE   " 230
CC
CC   REMOVE PARDEE-PASTORIA 230-KV LINE
DL   6.0 "PARDEE   " 230. "PASTORIA" 230. "1 "
CC
CC   REMOVE PARDEE-PASTORIA-WARNE 230-KV LINE
TG   6.0 "WARNE1   " 13.80 "1 "
TG   6.0 "WARNE2   " 13.80 "1 "
DL   6.0 "PARDEE   " 230. "WARNETAP" 230. "1 "
DL   6.0 "WARNE    " 230. "WARNETAP" 230. "1 "
DL   6.0 "PASTORIA" 230. "WARNETAP" 230. "1 "
CC
CC   IMPLEMENT PEF SPECIAL PROTECTION SCHEME FOR N-2
TG   12.0 "PSTRIAS1" 18.00 "S1"
TG   12.0 "PSTRIAG1" 18.00 "G1"
TG   12.0 "PSTRIAG2" 18.00 "G2"
TG   12.0 "PSTRIAS2" 18.00 "S2"
TG   12.0 "PSTRIAG3" 18.00 "G3"
CC
CC   INITIATE SEL-68 STABILITY TRIP
TG   18.0 "MAMOTH1G" 13.80 "1 "
TG   18.0 "MAMOTH2G" 13.80 "2 "
TG   18.0 "EASTWOOD" 13.80 "1 "
```

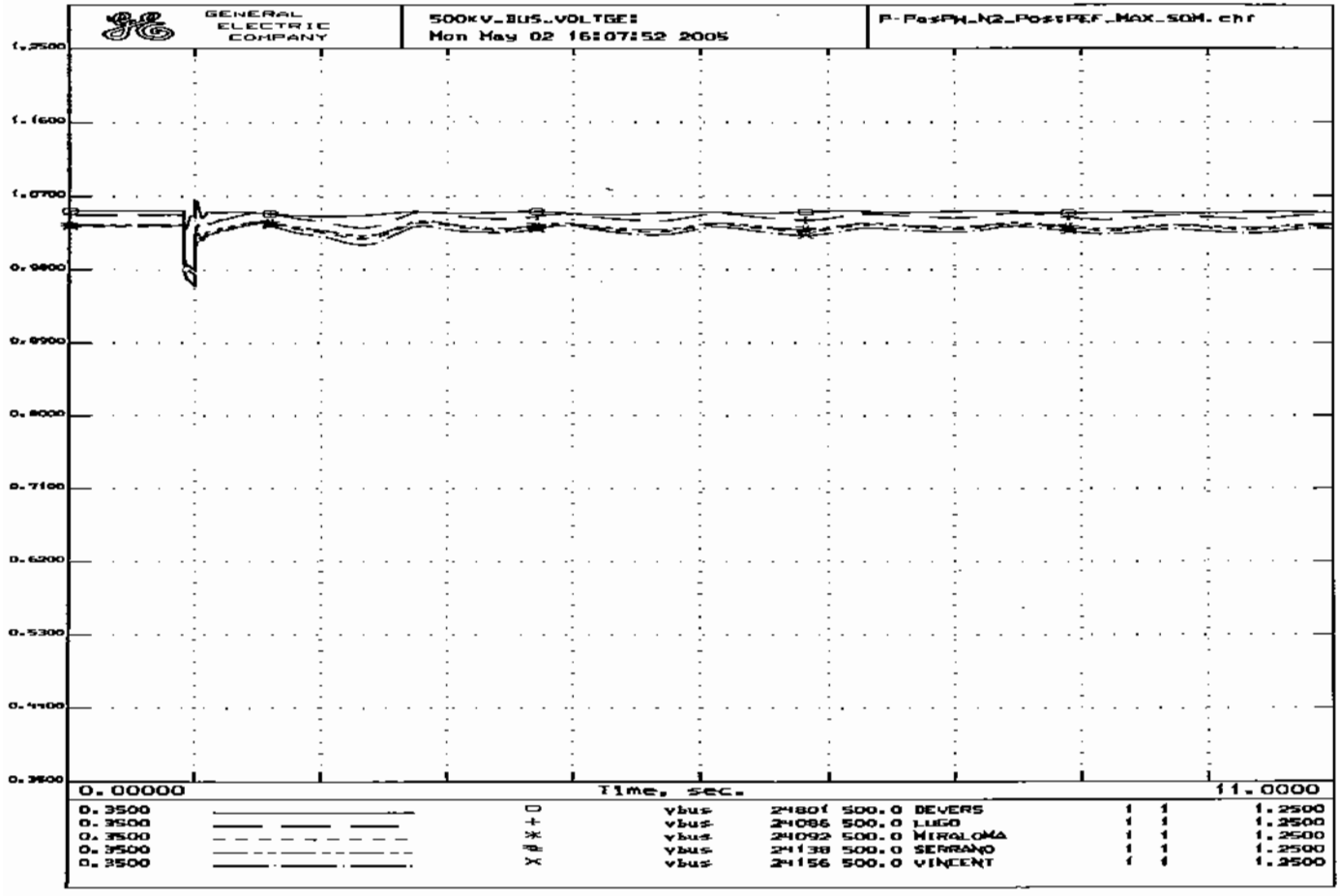
GENERAL ELECTRIC COMPANY
500KV_BUS_VOLTGE:
Mon May 02 16:07:52 2005
P-PosPH_N2_PostREF_MAX_SOM.chf
1.2500
1.1600
1.0700
0.9800
0.8900
0.8000
0.7100
0.6200
0.5300
0.4400
0.3500
0.00000
Time, sec.
11.0000
0.3500 vbus 24801 500.0 DEVERS 1 1 1.2500
0.3500 vbus 24086 500.0 LUGO 1 1 1.2500
0.3500 vbus 24092 500.0 MIRALOMA 1 1 1.2500
0.3500 vbus 24138 500.0 SERRANO 1 1 1.2500
0.3500 vbus 24156 500.0 VINCENT 1 1 1.2500

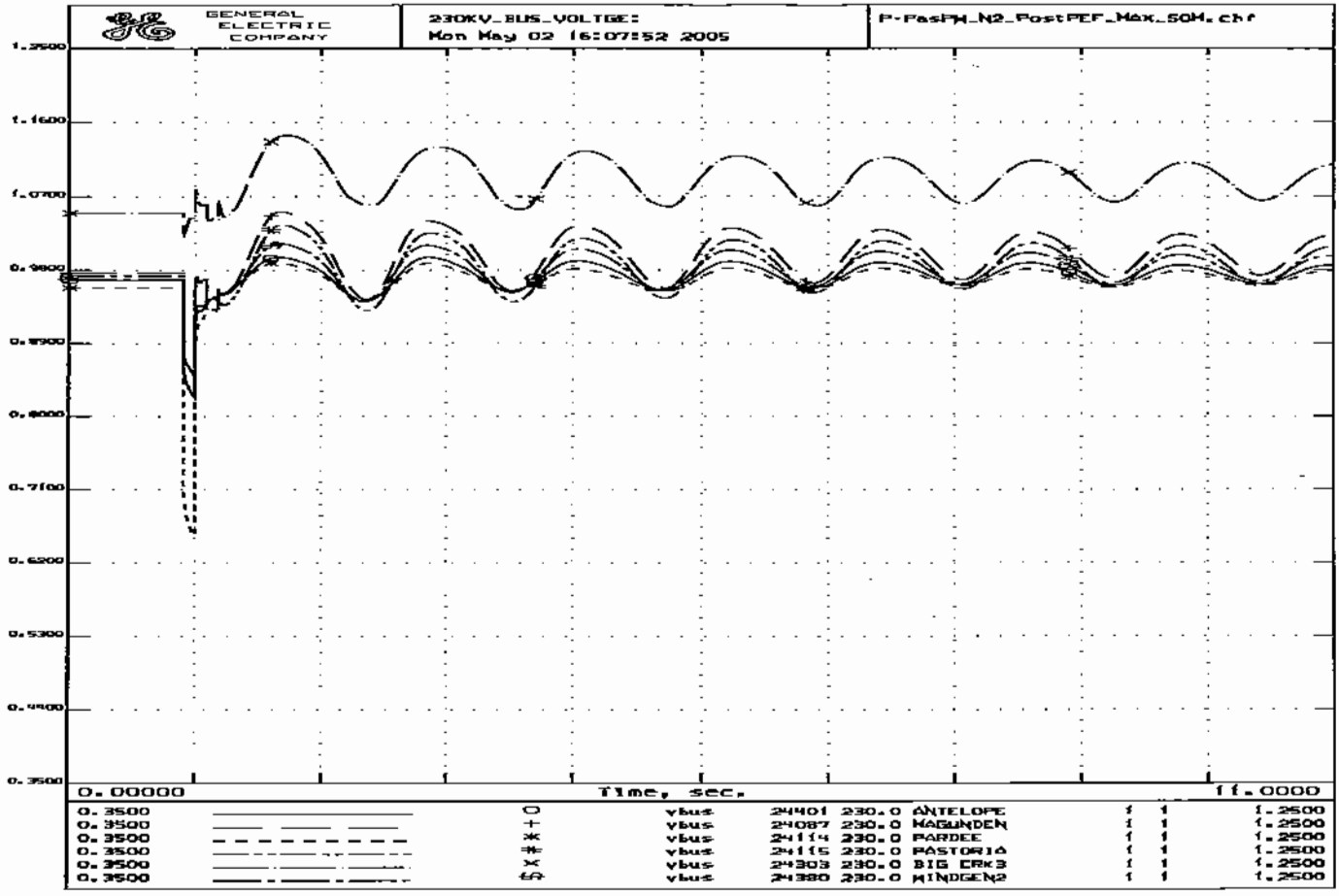
GENERAL ELECTRIC COMPANY
230KV_BUS_VOLTGE:
Mon May 02 16:07:52 2005
P-PasPH_N2_PostPEF_Max_50M.chf
1.2500
1.1600
1.0700
0.9800
0.8900
0.8000
0.7100
0.6200
0.5300
0.4400
0.3500
0.00000
Time, sec.
11.0000
0.3500 ○ vbus 24401 230.0 ANTELOPE 1 1 1.2500
0.3500 + vbus 24087 230.0 MAGUNDEN 1 1 1.2500
0.3500 ✳ vbus 24114 230.0 PARDEE 1 1 1.2500
0.3500 ✱ vbus 24115 230.0 PASTORIA 1 1 1.2500
0.3500 × vbus 24303 230.0 BIG CRK3 1 1 1.2500
0.3500 ⌂ vbus 24380 230.0 WINDGEN2 1 1 1.2500

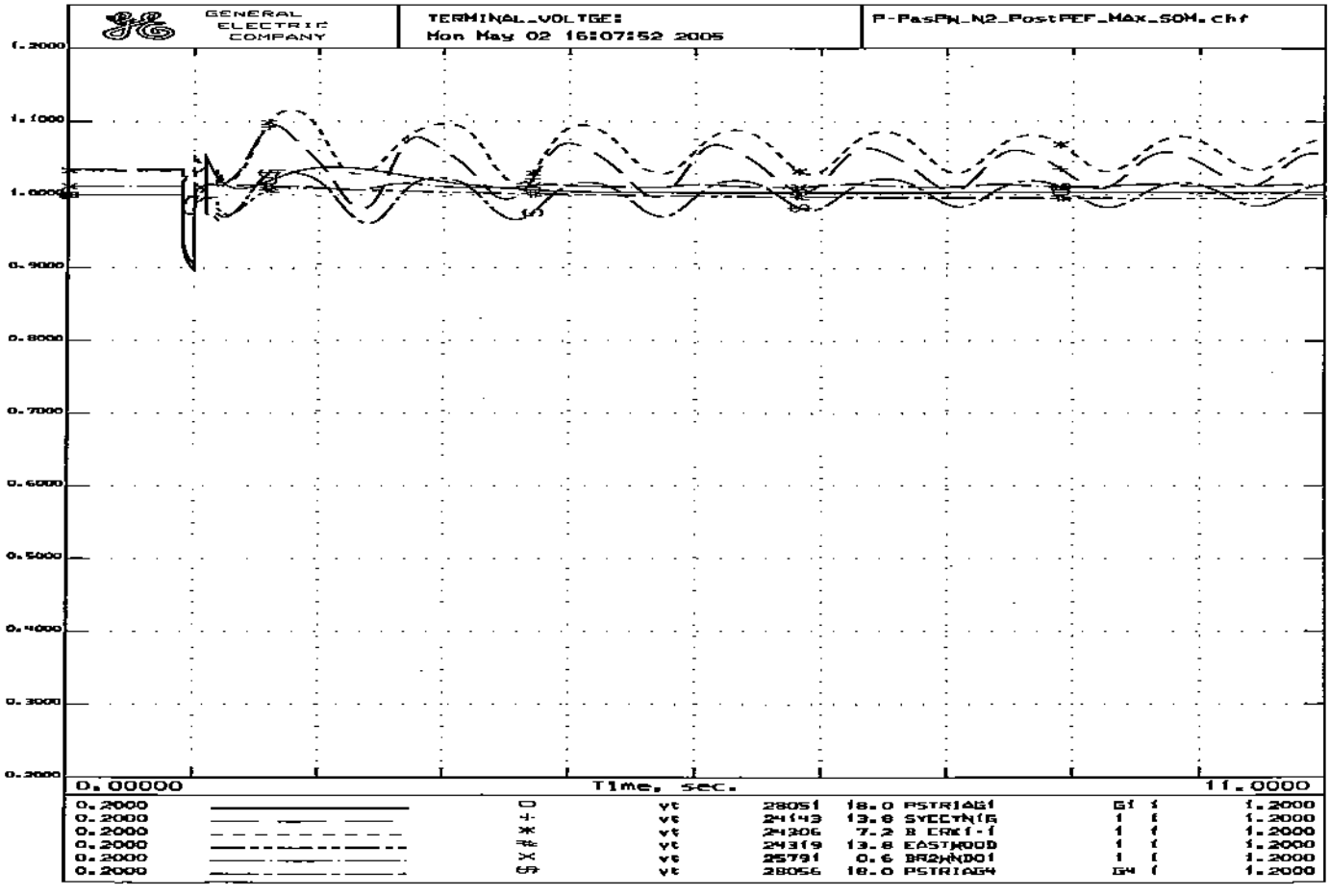
GENERAL ELECTRIC COMPANY
TERMINAL_VOLTGE:
Mon May 02 16:07:52 2005
P-PasPN_N2_PostPEF_MAX_SOM.chf
1.2000
1.1000
1.0000
0.9000
0.8000
0.7000
0.6000
0.5000
0.4000
0.3000
0.2000
0.00000
Time, sec.
11.0000
0.2000 vt 28051 18.0 PSTRIAG1 G1 1 1.2000
0.2000 vt 24143 13.8 SYECTN(B 1 1 1.2000
0.2000 vt 24306 7.2 B CRK1-1 1 1 1.2000
0.2000 vt 24319 13.8 EASTWOOD 1 1 1.2000
0.2000 vt 25791 0.6 BR2WNDO1 1 1 1.2000
0.2000 vt 28056 18.0 PSTRIAG4 G4 1 1.2000

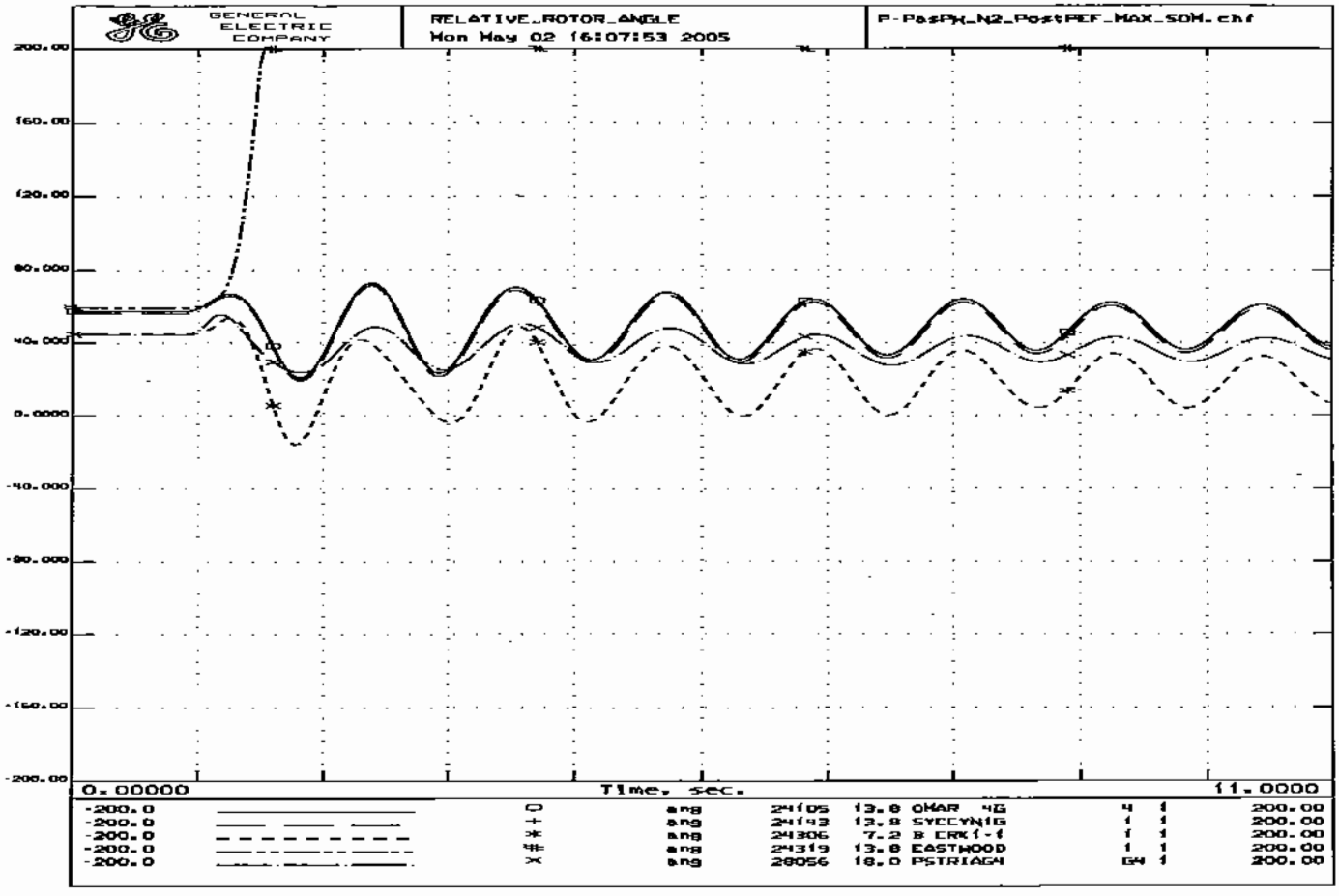
GENERAL ELECTRIC COMPANY
RELATIVE_ROTOR_ANGLE
Mon May 02 16:07:53 2005
P-PasPK_N2_PostREF_MAX_SOM.chf
200.00
160.00
120.00
80.000
40.000
0.0000
-40.000
-80.000
-120.00
-160.00
-200.00
0.00000
Time, sec.
11.0000
-200.0 ○ ang 24105 13.8 OMAR 4G 4 1 200.00
-200.0 + ang 24143 13.8 SYECYN1G 1 1 200.00
-200.0 * ang 24306 7.2 B ERK1-1 1 1 200.00
-200.0 # ang 24319 13.8 EASTWOOD 1 1 200.00
-200.0 × ang 28056 18.0 PSTRIAGN G4 1 200.00

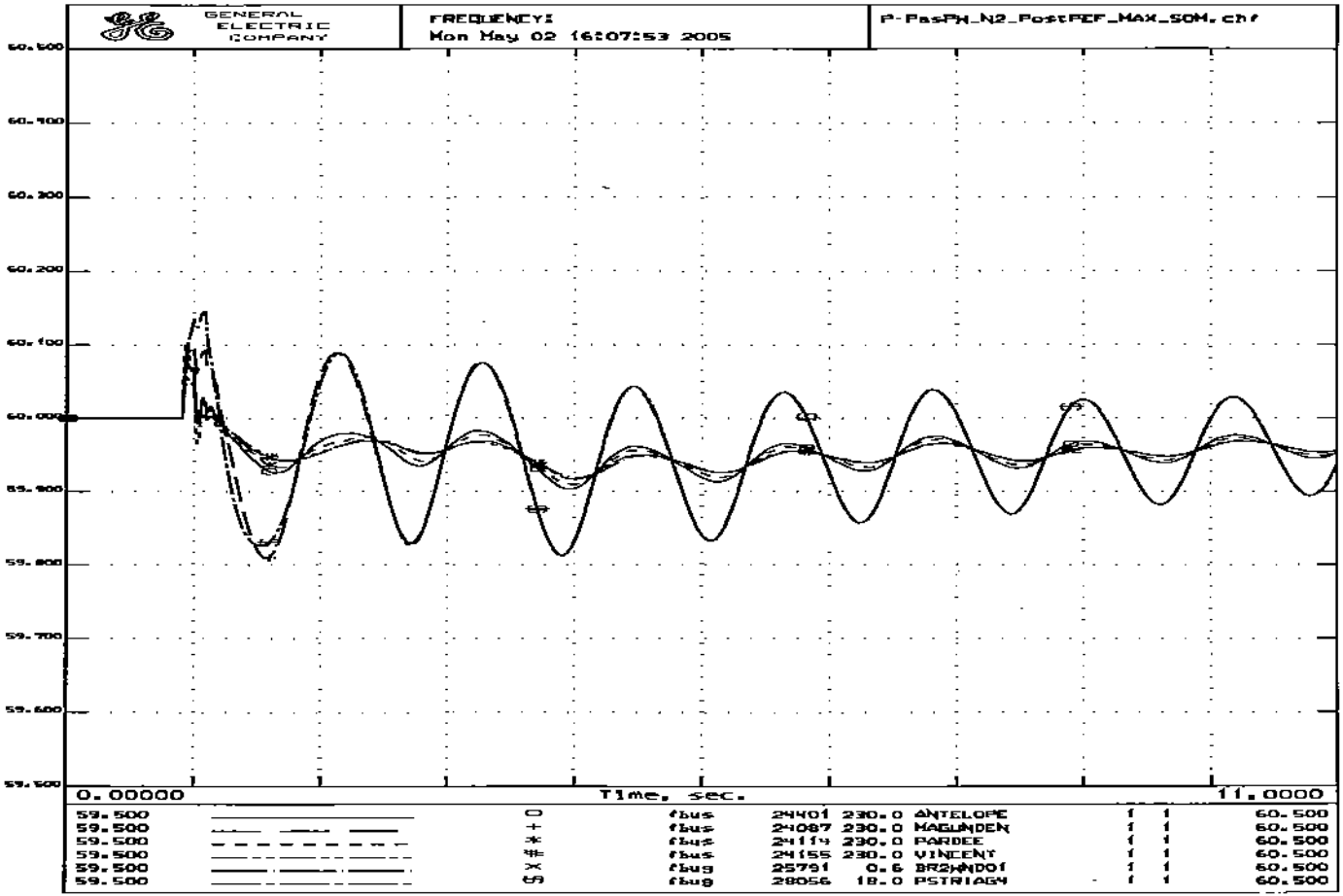
GENERAL ELECTRIC COMPANY
FREQUENCY:
Mon May 02 16:07:53 2005
P-PasPN_N2_PostPEF_MAX_SOM.chf
60.500
60.400
60.300
60.200
60.100
60.000
59.900
59.800
59.700
59.600
59.500
0.00000
Time, sec.
11.0000
59.500 ○ fbus 24401 230.0 ANTELOPE 1 1 60.500
59.500 + fbus 24087 230.0 MAGUNDEN 1 1 60.500
59.500 * fbus 24114 230.0 PARDEE 1 1 60.500
59.500 # fbus 24155 230.0 VINCENT 1 1 60.500
59.500 × fbus 25791 0.6 BR2WNDO1 1 1 60.500
59.500 fbus 28056 18.0 PSTRIAGM 1 1 60.500

```
PostPEF_MAX_SOM.sav
PostPEF.dyd
TITLE
Calpine Pastoria Addition Stability Study: Loss of Two 230-KV Lines
6-CYCLE 1-Phase Fault at Vincent 230kV Bus
N-2 OUTAGE: Vincent-Antelope No.1 and No.2 230kV Lines
SYSTEM STABILITY CASE - V-A_N2_PostPEF_MAX_SOM.swt
PostPEF_MAX_SOM.sav + PostPEF.dyd + V-A_N2_PostPEF_MAX_SOM.swt
RUN 10.0
CC
CC   ***Calpine Pastoria Addition DYNAMIC STABILITY ASSESSMENT***
CC   APPLY A 1-PHASE-TO-GROUND FAULT ON THE VINCENT 230-KV BUS
FB   0.0 "VINCENT " 230  0.00068 0.00999
CC
CC   CLEAR FAULT IN 6 CYCLES
CFB  6.0 "VINCENT " 230
CC
CC   REMOVE VINCENT-ANTELOPE NO.1 230-KV LINE
DL   6.0 "VINCENT " 230. "ANTELOPE" 230. "1 "
CC
CC   REMOVE VINCENT-ANTELOPE NO.2 230-KV LINE
DL   6.0 "ANTELOPE" 230. "VINCENT " 230. "2 "
CC
CC   IMPLEMENT PEF SPECIAL PROTECTION SCHEME FOR N-2
TG   12.0 "PSTRIAS1" 18.00 "S1"
TG   13.0 "PSTRIAG1" 18.00 "G1"
TG   12.0 "PSTRIAG2" 18.00 "G2"
TG   13.0 "PSTRIAS2" 18.00 "S2"
TG   13.0 "PSTRIAG3" 18.00 "G3"
CC
CC   INITIATE SEL-68 STABILITY TRIP
TG   18.0 "MAMOTH1G" 13.80 "1 "
TG   18.0 "MAMOTH2G" 13.80 "2 "
TG   18.0 "EASTWOOD" 13.80 "1 "
```

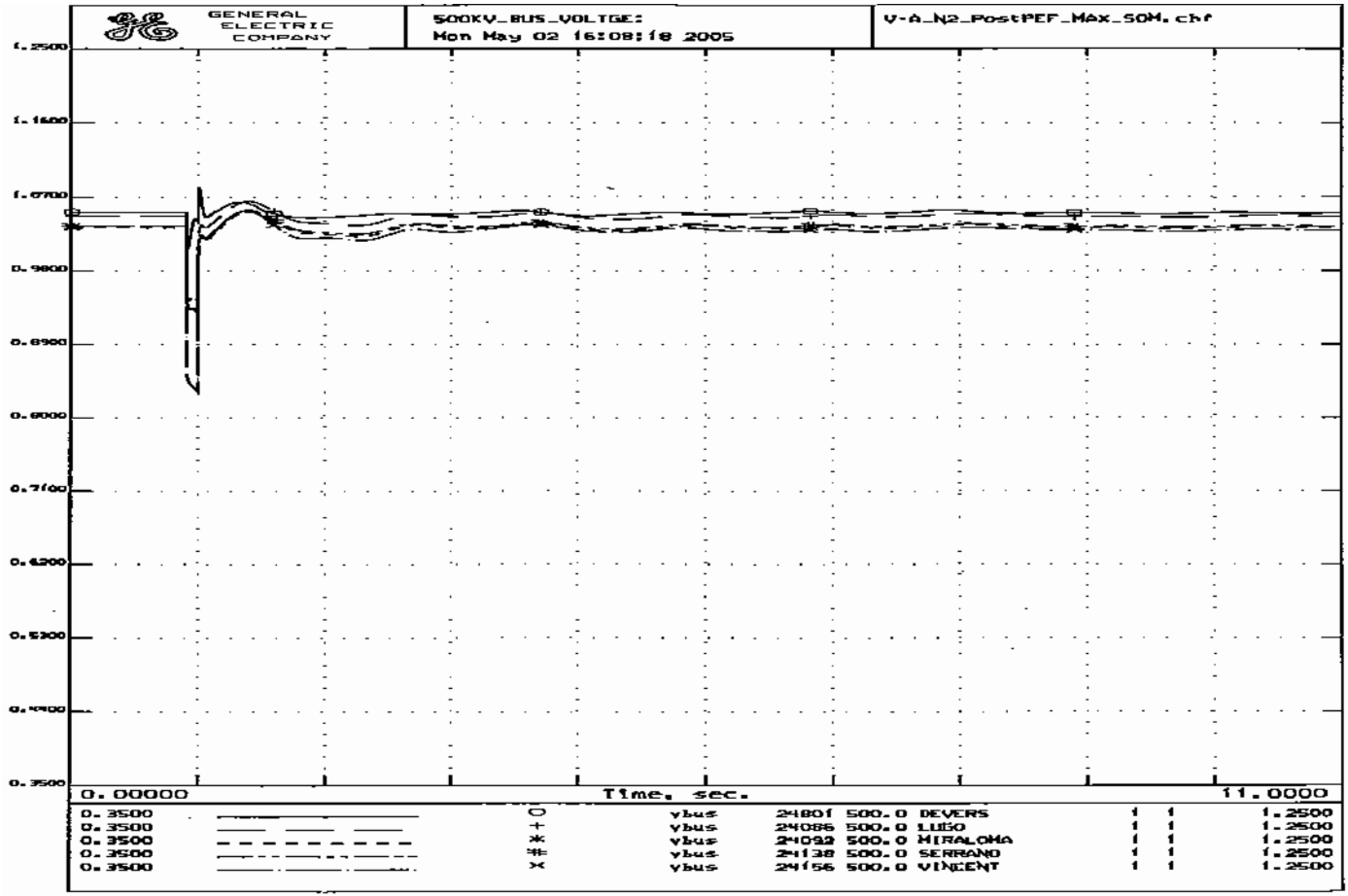
GENERAL ELECTRIC COMPANY
500KV_BUS_VOLTGE:
Mon May 02 16:08:18 2005
V-A_N2_PostPEF_MAX_50M.chf
1.2500
1.1600
1.0700
0.9800
0.8900
0.8000
0.7100
0.6200
0.5300
0.4400
0.3500
0.00000
Time, sec.
11.0000
0.3500 O vbus 24801 500.0 DEVERS 1 1 1.2500
0.3500 + vbus 24086 500.0 LUGO 1 1 1.2500
0.3500 * vbus 24092 500.0 MIRALOMA 1 1 1.2500
0.3500 # vbus 24138 500.0 SERRANO 1 1 1.2500
0.3500 x vbus 24156 500.0 VINCENT 1 1 1.2500

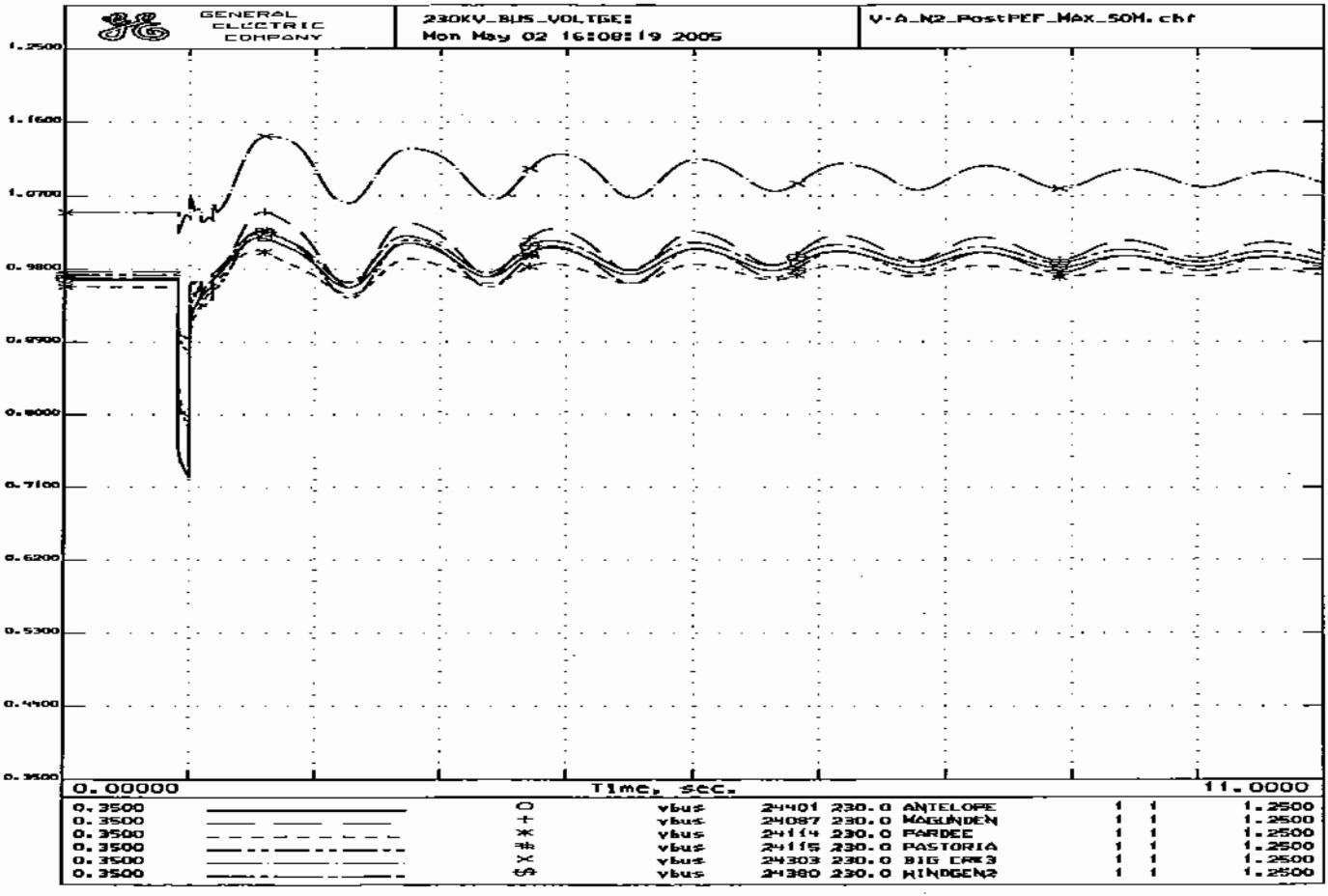
GENERAL ELECTRIC COMPANY
230KV_BUS_VOLTGE:
Mon May 02 16:08:19 2005
V-A_N2_PostPEF_MAX_50M.chf
1.2500
1.1600
1.0700
0.9800
0.8900
0.8000
0.7100
0.6200
0.5300
0.4400
0.3500
0.00000
Time, sec.
11.0000
0.3500 O vbus 24401 230.0 ANTELOPE 1 1 1.2500
0.3500 + vbus 24087 230.0 MAGUNDEN 1 1 1.2500
0.3500 * vbus 24114 230.0 FARDEE 1 1 1.2500
0.3500 # vbus 24115 230.0 PASTORIA 1 1 1.2500
0.3500 X vbus 24303 230.0 BIG CR#3 1 1 1.2500
0.3500 vbus 24380 230.0 WINDGEN2 1 1 1.2500

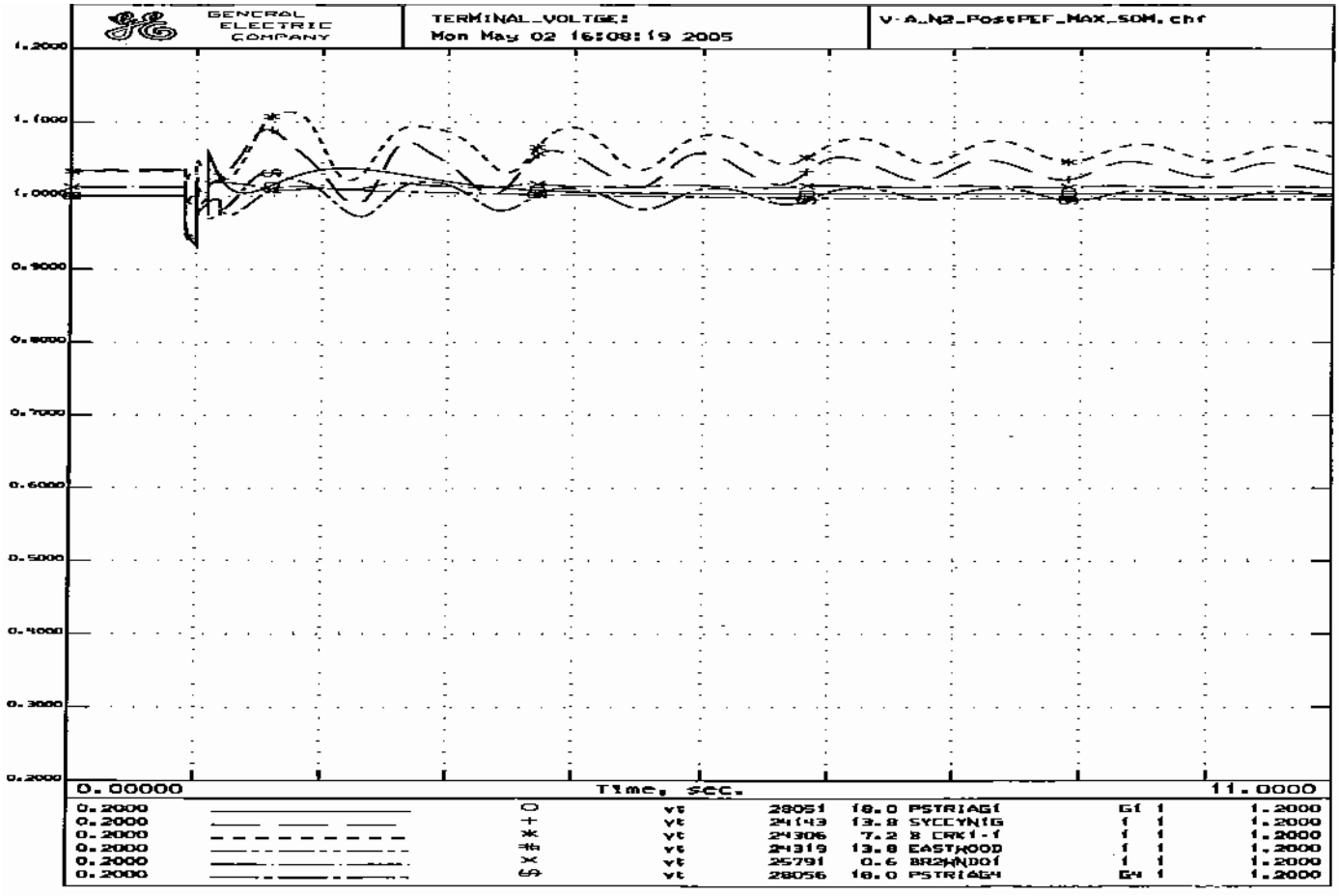
GENERAL ELECTRIC COMPANY
TERMINAL_VOLTGE:
Mon May 02 16:08:19 2005
V-A_N2_PostPEF_MAX_SOM.chf
1.2000
1.1000
1.0000
0.9000
0.8000
0.7000
0.6000
0.5000
0.4000
0.3000
0.2000
0.00000
Time, sec.
11.0000
0.2000 O vt 28051 18.0 PSTRIAG1 G1 1 1.2000
0.2000 + vt 24143 13.8 SYCCYNIG 1 1 1.2000
0.2000 * vt 24306 7.2 8 CRK1-1 1 1 1.2000
0.2000 vt 24319 13.8 EASTWOOD 1 1 1.2000
0.2000 vt 25791 0.6 BR2WNDO1 1 1 1.2000
0.2000 vt 28056 18.0 PSTRIAG4 G4 1 1.2000

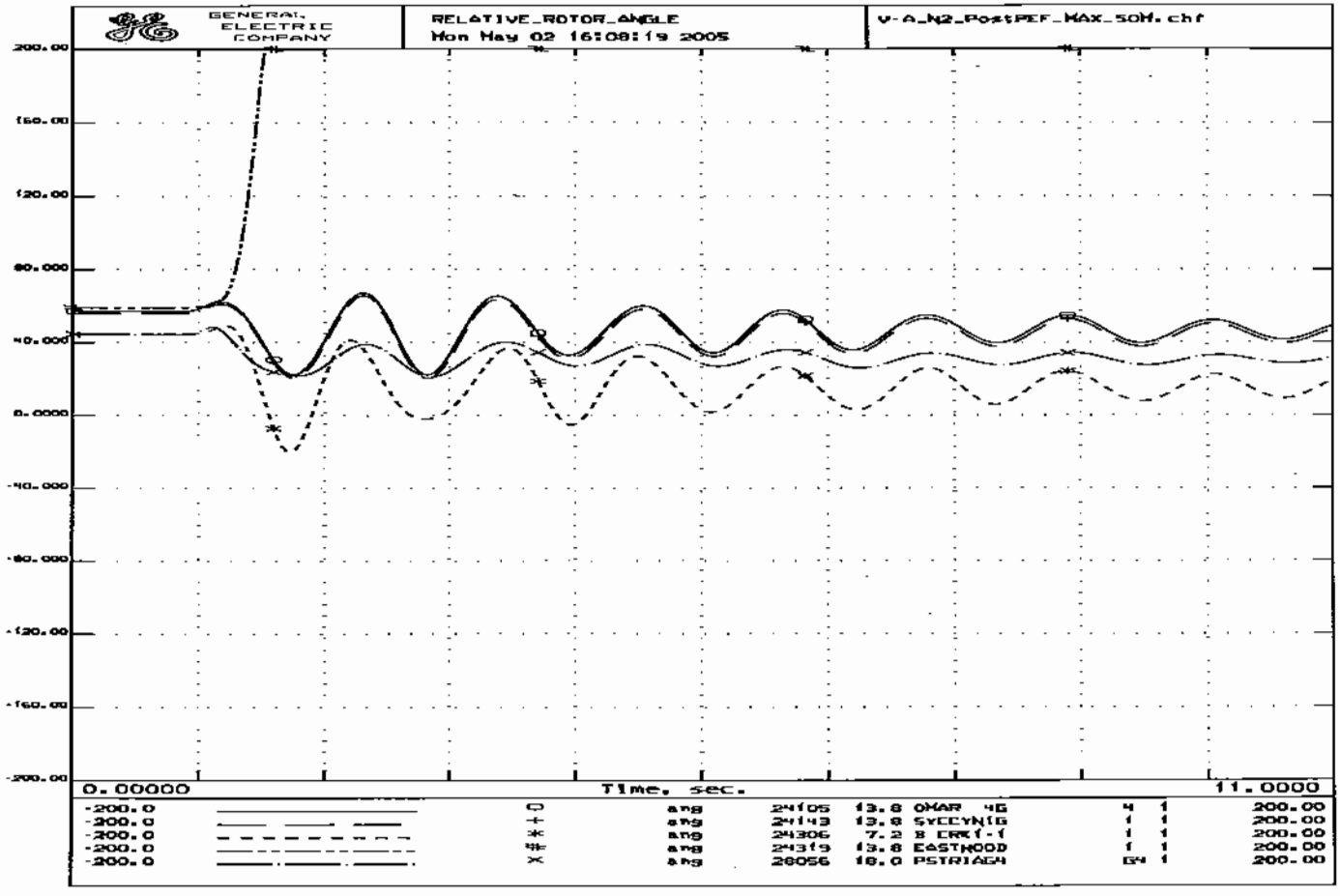
GENERAL ELECTRIC COMPANY
RELATIVE_ROTOR_ANGLE
Mon May 02 16:08:19 2005
V-A_N2_PostPEF_MAX_50M.chf
200.00
160.00
120.00
80.000
40.000
0.0000
-40.000
-80.000
-120.00
-160.00
-200.00
0.00000
Time, sec.
11.0000
-200.0 ang 24105 13.8 OMAR 4G 4 1 200.00
-200.0 ang 24143 13.8 SYCCYNIG 1 1 200.00
-200.0 ang 24306 7.2 8 CRK1-1 1 1 200.00
-200.0 ang 24319 13.8 EASTWOOD 1 1 200.00
-200.0 ang 28056 18.0 PSTRIAG4 G4 1 200.00

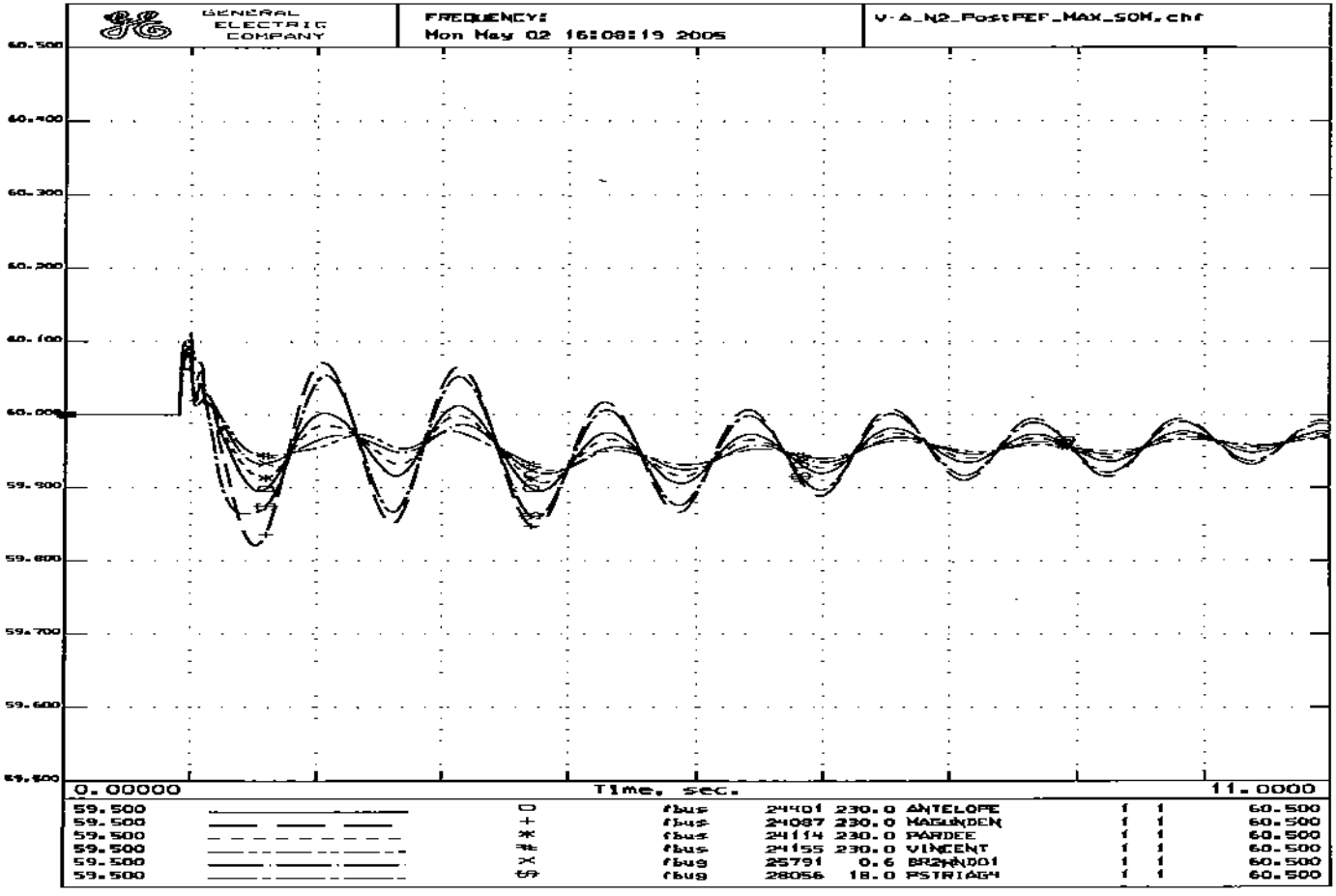
GENERAL ELECTRIC COMPANY
FREQUENCY:
Mon May 02 16:08:19 2005
V-A_N2_PostPEF_MAX_SOM.chf
60.500
60.400
60.300
60.200
60.100
60.000
59.900
59.800
59.700
59.600
59.500
0.00000
Time, sec.
11.0000
59.500 □ fbus 24401 230.0 ANTELOPE 1 1 60.500
59.500 + fbus 24087 230.0 MAGUNDEN 1 1 60.500
59.500 * fbus 24114 230.0 PARDEE 1 1 60.500
59.500 # fbus 24155 230.0 VINCENT 1 1 60.500
59.500 × fbug 25791 0.6 BR2NDD1 1 1 60.500
59.500 fbug 28056 18.0 PSTRIAG4 1 1 60.500

APPENDIX H

CUSTOMER PROVIDED DATA

CALPINE

CALPINE FLEET OPERATIONS
104 WOODMERE ROAD
FOLSOM, CALIFORNIA 95630
916.608.1000
916.985.5655 (FAX)

November 8, 2004

Judy Nickel
New Resource Interconnections
California ISO
P.O. Box 639014
Folsom, CA 95763-9014

Subject: New Generation Interconnection Application

Dear Ms. Nikel:

Attached is the Generator Interconnection Application Form for electric power generation facility at Calpine Corporation's existing Pastoria Energy Facility (PEF) site. The Pastoria Expansion Project, would consist of a Gas Turbine with a net summer output capability of 157 MW, and would utilize the existing PEF interconnection to the Southern California Edison's owned and California Independent System Operator (CAISO) controlled transmission system.

Per the interconnection requirements of the CAISO, a wire transfer in the amount of $10,000 will be sent to the required amount.

Please inform me via e-mail (asmirali@calpine.com) once the CAISO deems the status of this application to be complete. If you have any questions or concerns, please contact either Alan Roth at (925) 431-1303 or myself at (925) 570-4256.

Best regards,

Ali Amirali
Director of Transmission Management
Calpine Corporation

Attachments

cc: Bob Fishman
David Lewis
Peter Hansen
Duncan Brown
Michael Argentine
Andrew Whitlome
Alan Roth
Jim McLucas
Jacquie DeRosa (CAISO)

CALIFORNIA ISO

Generator Interconnection Application Form

The following form is to be filled out for generators that intend to interconnect to the ISO grid. **Three copies** of the completed Application should be sent to:

RECEIVED

NOV 09 2004

CALIF. ISO
GRID PLANNING

Judy Nickel
New Resource Interconnections
California ISO
P.O. Box 639014
Folsom, CA 95763-9014

Overnight address: 151 Blue Ravine Road, Folsom, CA 95630

It is important that the data provided via this form is accurate. Additional transmission system facility costs, associated with changes in facility requirements, that are due to differences between model data provided by the generation developer and the actual generator test data, may be the responsibility of the generation developer.

1. General Project Information

A. Project Name: PASTORIA EXPANSION

B. Project Location:
Street Address: Pastoria Energy Center, 39789 Edmonston Pumping Plant Road
City, State: Lebec, CA
Zip Code: 93243-0866

C. Proposed Interconnection or Testing date: May 2006
Proposed Commercial Operation date: July 2006
Proposed Term of Service: 30 years

D. Type of Project
Cogeneration: _____ Reciprocating Engine: _____
Biomass: _____ Steam Turbine: _____
Gas Turbine: __X__ Wind: _____
Hydro: _____ Photovoltaic: _____
Combined Cycle: _____
Other (please describe): _____

E: Total Generator rated output (kW): 158,800
Individual generator rated output (kW for each unit): 158,800

Generator auxiliary load (kW): 1800 / 6000
Project net capacity (kW): 157,000 *
Standby load when generator is off-line (kW): 6000

Net Power

F. The interconnection point(s) and the location of interconnection:
Additional generator added to the existing Pastoria Energy Facility, interconnected to SCE's Pastoria Substation

G. Project Developer

Name:	A.J.Whittome
Street Address:	4160 Dublin Blvd
City, State:	Dublin, CA
Zip Code:	94568-3139
Phone Number:	925-479-6789
Fax Number:	925-479-7311
Email Address:	awhittome@calpine.com

H. Site Owner

Name:	Pastoria Energy Center LLC
Street Address:	39789 Edmonston Pumping Plant Road
City, State:	Lebec, CA
Zip Code:	93243-0866
Phone Number:	661-654-8000
Fax Number:	661-858-2321
Email Address:	margentine@calpine.com

I. Person Responsible for completing this Application

Name:	Alan Roth
Title:	Sr. Operations Eng.
Company Name:	Calpine
Street Address:	4160 Dublin Blvd
City, State:	Dublin, CA
Zip Code:	94568
Phone Number:	924 479-6728
Fax Number:	925 479-7303
Email Address:	alanr@calpine.com

Signature: [signature] Date: 11/8/04

2. **Provide two original prints and one reproducible copy (no larger than 36" x 24") of the following:**

A. Site drawing to scale, showing generator location and point of interconnection with the ISO Grid.

B. Single-line diagram showing applicable equipment such as generating units, step-up transformers, auxiliary transformers, switches/disconnects of the proposed interconnection, including the required protection devices and circuit breakers. For wind generator farms, the one line diagram should include the distribution lines connecting the various groups of generating units, the generator capacitor banks, the step up transformers, the distribution lines, and the substation transformers and capacitor banks at the point of interconnection with the utility.

3. **Generator Information**

A. Number of Generators: _____1_____
(Please repeat the following items for each generator)

B. Manufacturer: _____GE_____

C. Year Manufactured: _____

D. Nominal Terminal Voltage: ____18,000_____

E. Rated Power Factor (%): ___0.85_____

F. Type (Induction, Synchronous, D.C. with Inverter): _Synchronous_____

G. Phase (3phase or single phase): ____3_____

H. Connection (Delta, Grounded WYE, Ungrounded WYE, impedance grounded): _impedance grounded WYE_____

I. Generator Voltage Regulation Range: ____+/- 5%_____

J. Generator Power Factor Regulation Range: _0.85 lag – 0.95 lead _____

K. For combined cycle plants, specify the plant output for an outage of the steam turbine or an outage of a single combustion turbine: _____

4. **Synchronous Generator – General Information:**
(Please repeat the following for each generator)

A. Rated Generator speed (rpm): ____3600_____

B. Rated MVA: _ 234 _____

C. Rated Generator Power Factor: _____0.85_____

D. Generator Efficiency at Rated Load (%): _____99%_____

E. Moment of Inertia (including prime mover): _378,619 lb-ft^2_____

F. Inertia Time Constant (on machine base) H: _4.844_____sec or MJ/MVA

G. SCR (Short Circuit Ratio) - the ratio of the field current required for rated open-circuit voltage to the field current required for rated short-circuit current):____.489_____

H. Please attach generator reactive capability curves.

I. Rated Hydrogen Cooling Pressure in psig (Steam Units only): ___30_____

J. Please attach a plot of generator terminal voltage versus field current that shows the air gap line, the open-circuit saturation curve, and the saturation curve at full load and rated power factor.

5. **Excitation System Information**
(Please repeat the following for each generator)

A. Indicate the Manufacturer _____GE_____ and Type _____7_____of excitation system used for the generator. For exciter type, please choose from 1 to 8 below or describe the specific excitation system.

1) Rotating DC commutator exciter with continuously acting regulator. The regulator power source is independent of the generator terminal voltage and current.

2) Rotating DC commentator exciter with continuously acting regulator. The regulator power source is bus fed from the generator terminal voltage.

3) Rotating DC commutator exciter with non-continuously acting regulator (i.e., regulator adjustments are made in discrete increments).

4) Rotating AC Alternator Exciter with non-controlled (diode) rectifiers. The regulator power source is independent of the generator terminal voltage and current (not bus-fed).

5) Rotating AC Alternator Exciter with controlled (thyristor) rectifiers. The regulator power source is fed from the exciter output voltage.

6) Rotating AC Alternator Exciter with controlled (thyristor) rectifiers.

7) Static Exciter with controlled (thyristor) rectifiers. The regulator power source is bus-fed from the generator terminal voltage.

8) Static Exciter with controlled (thyristor) rectifiers. The regulator power source is bus-fed from a combination of generator terminal voltage and current (compound-source controlled rectifiers system.

B. Attach a copy of the block diagram of the excitation system from its instruction manual. The diagram should show the input, output, and all feedback loops of the excitation system.

C. Excitation system response ratio (ASA): _____2_____
D. Full load rated exciter output voltage: _____350 v_____
E. Maximum exciter output voltage (ceiling voltage): _____2.15 p.u._____
F. Other comments regarding the excitation system?

_____
_____
_____

6. **Power System Stabilizer Information.**

(Please repeat the following for each generator. All new generators are required to install PSS unless an exemption has been obtained from WSCC. Such an exemption can be obtained for units that do not have suitable excitation systems.)

A. Manufacturer: _____GE_____
B. Is the PSS digital or analog? ___digital_____
C. Note the input signal source for the PSS?
_____ Bus frequency _____ Shaft speed _____ Bus Voltage
_integral of accelerating power_____Other (specify source)
D. Please attach a copy of a block diagram of the PSS from the PSS Instruction Manual and the correspondence between dial settings and the time constants or PSS gain.
E: Other comments regarding the PSS?

_____
_____
_____

7. **Turbine-Governor Information**
(Please repeat the following for each generator)

Please complete Part A for steam, gas or combined-cycle turbines, Part B for hydro turbines, and Part C for both.

A. Steam, gas or combined-cycle turbines:

1) List type of unit (Steam, Gas, or Combined-cycle): ___gas_____
2) If steam or combined-cycle, does the turbine system have a reheat process (i.e., both high- and low-pressure turbines)? _____
3) If steam with reheat process, or if combined-cycle, indicate in the space provided, the percent of full load power produced by each turbine:

Low pressure turbine or gas turbine: _____%
High pressure turbine or steam turbine: _____%

B. Hydro turbines:

1) Turbine efficiency at rated load: _____%
2) Length of penstock: _____ft
3) Average cross-sectional area of the penstock: _____ft2
4) Typical maximum head (vertical distance from the bottom of the penstock, at the gate, to the water level): _____ft
5) Is the water supply run-of-the-river or reservoir: _____
6) Water flow rate at the typical maximum head: _____ft3/sec
7) Average energy rate: _____ kW-hrs/acre-ft
8) Estimated yearly energy production: _____kW-hrs

C. Complete this section for each machine, independent of the turbine type.

1) Turbine manufacturer: _____GE_____
2) Maximum turbine power output: ____170,000_____MW
3) Minimum turbine power output (while on line): __85,000_____MW
4) Governor information:
   a: Droop setting (speed regulation): _____5%_____
   b: Is the governor mechanical-hydraulic or electro-hydraulic (Electro-hydraulic governors have an electronic speed sensor and transducer.)? __electro-hydraulic_____
   c: Other comments regarding the turbine governor system?
   _____
   _____
   _____
   _____

8. Synchronous Generator and Associated Equipment -- Dynamic Models:

For each Generator, governor, exciter and power system stabilizer, select the appropriate dynamic model from the General Electric PSLF Program Manual and provide the required input data. The manual is available on the GE website at:

https://quickplace01.geextranet.com/QuickPlace/psec_ge_pslf/PageLibrary85256B9D004802D0.nsf/h_Toc/92be13faeg1h5839052567080016723 8/?OpenDocument

Generator data sheets are available on the GE website at:

https://quickplace01.geextranet.com/QuickPlace/psec_ge_pslf/PageLibrary85256A2A00654741.nsf/h_Index/5F812CDC819257128525 6A3B00693C43/?OpenDocument

The models are listed alphabetically in Table 3.2 and by model type in Table 3.3. These tables are in Section 3.10.3 of the manual. Links to these tables are provided in the Program Manual's Table of Contents. There are links in the tables

to a detailed description of the specific model, a definition of each parameter, a list of the output channels, explanatory notes, and a control system block diagram. The block diagrams are also available on the Ca-ISO website.

If you require assistance in developing the models, we suggest you contact General Electric at 518-385-8150. Accurate models are important to obtain accurate study results. Costs associated with any changes in facility requirements that are due to differences between model data provided by the generation developer and the actual generator test data, will normally be the responsibility of the generation developer.

9. Induction Generator Data:

A. Rated Generator Power Factor at rated load: _____
B. Moment of Inertia (including prime mover): _____
C. Do you wish reclose blocking? Yes _____, No _____
Note: Sufficient capacitance may be on the line now, or in the future, and the generator may self-excite unexpectedly.

10. Generator Short Circuit Data

For each generator, provide the following reactances expressed in p.u. on the generator base:

- X"1 – positive sequence subtransient reactance: __0.15_____
- X"2 – negative sequence subtransient reactance: _____
- X"0 – zero sequence subtransient reactance: _____

Generator Grounding:

A. _____ Solidly grounded
B. ___X___ Grounded through an impedance

Impedance value in p.u on generator base: R: ___31.5_____ p.u.
X: _____ p.u.

C. _____Ungrounded

11. Step-Up Transformer Data

For each step-up transformer, fill out the data form provided in Table 1.

12. Line Data

There is no need to provide data for new lines that are to be planned by the Participating Transmission Owner. However, for transmission lines that are to be planned by the generation developer, please provide the following information:

Nominal Voltage: _____
Line Length (miles): _____
Line termination Points: _____
Conductor Type; _____ Size: _____.
If bundled: Number per phase:_____, Bundle spacing _____in.
Phase Configuration: Vertical_____, Horizontal:_____
Phase Spacing (ft): A-B_____, B-C_____, C-A:_____
Distance of lowest conductor to Ground: _____ft
Ground Wire Type:_____ Size:_____ Distance to Ground: _____ft
Attach Tower Configuration Diagram
Summer line ratings in amperes (normal and emergency)_____
Resistance (R): _____p.u. **
Reactance: (X): _____p.u. **
Line Charging (B/2): _____p.u. **
** On 100-MVA and nominal line voltage (kV) Base

13. Studies

Will the Participating Transmission Owner be responsible for conducting the System Impact Study and Facility Study or will the project proponent be utilizing another party to complete these studies?

_____
_____

TABLE 1

TRANSFORMER DATA

UNIT Combustion Turbine

NUMBER OF TRANSFORMERS _____ PHASE _____

RATED KVA	H Winding	X Winding	Y Winding
Connection (Delta, Wye, Gnd.)	WYE	Delta	
55 C Rise	150 MVA	150 MVA	
RATING ← 65 C Rise	250 MVA	250 MVA	
RATED VOLTAGE	236 kv	18 kv	
BIL	750 kv	150 kv	
AVAILABLE TAPS (planned or existing)	2 ea +/- 2 ½ %		
LOAD TAP CHANGER?	No		
TAP SETTINGS			

FROM WIND. NOM VOLT TO WIND NOM VOLT

b base

FROM WIND NOMINAL VOLTAGE

TO WIND NOMINAL VOLTAGE

COOLING TYPE: OA _____ OA/FA _____ OA/FA/FA X _____ OA/FOA _____

IMPEDANCE	H-X	H-Y	X-Y
Percent	10		
MVA Base	150		
Tested Taps			

X from – t

X from – t

BASE MVA

MVA base for PSLF

WINDING RESISTANCE	H	X	Y
Ohms	.002 pu	.002 pu	

CURRENT TRANSFORMER RATIOS

H 3000:5 MR _____ X 12000:5 _____ Y _____ N _____

PERCENT EXCITING CURRENT 100 % Voltage; _____ 110% Voltage _____

Supply copy of nameplate and manufacture's test report when available

Model Name: genrou

Description Solid rotor generator represented by equal mutual inductance rotor modeling

Prerequisites: Generator present in load flow working case

Inputs: Network boundary variables, Field Voltage, Turbine Power

Invocation: `genrou [<n>] {<name> <kv>} <id> :`

Parameters:

EPCL Default Variable Data			*Description*
4.767	Tpdo	7.0	D-axis transient rotor time constant
0.033	Tppdo	0.030	D-axis sub-transient rotor time constant
0.409	Tpqo	0.75	Q-axis transient rotor time constant
0.071	Tppqo	0.05	Q-axis sub-transient rotor time constant
4.844	H	3.0	Inertia constant, sec
0	D	0.0	Damping factor, pu
2.14	Ld	2.1	D-axis synchronous reactance
2.042	Lq	2.0	Q-axis synchronous reactance
0.322	Lpd	0.2	D-axis transient reactance
0.497	Lpq	0.5	Q-axis transient reactance
0.228	Lppd	0.18	D-axis transient reactance
0.189	Ll	0.15	Stator leakage reactance, pu
0.055	S1	0.05	Saturation factor at 1 pu flux
0.231	S12	0.3	Saturation factor at 1.2 pu flux
0.004	Ra	0.0	Stator resistance, pu
0	Rcomp	0.0	Compounding resistance for voltage control, pu
0	Xcomp	0.0	Compounding reactance for voltage control, pu

Model Name: exst4b

Description IEEE type ST4b excitation system

Prerequisites: Generator model ahead of this model in dynamic models table

Inputs: Compounded generator terminal voltage, generator field current, generator speed

Invocation: `exst4b [<n>] {<name> <kv>} <id> :`

Parameters:

EPCL Default Variable	*Data*	*Description*	
0	Tr	0.02	Filter time constant, sec
3.97	Kpr	3.15	Proportional Gain, pu
3.97	Kir	3.15	Integral Gain, pu
0.01	Ta	0.01	Time constant, sec
1	Vrmax	1.0	Maximum control element output, pu
-0.87	Vrmin	-0.87	Minimum control element output, pu
1	Kpm	1.0	Prop. Gain of field voltage regulator, pu
0	Kim	0.0	Integral Gain of field voltage regulator, pu
1	Vmmax	1.0	Maximum field voltage regulator output, pu
-0.87	Vmmin	-0.87	Minimum field voltage regulator output, pu
0	Kg	0.00	Excitation limiter gain, pu
5.04	Kp	6.5	Potential source gain, pu
0	Angp	0.0	Phase angle of potential source, degree
0	Ki	0.0	Current source gain, pu
0.08	Kc	0.08	Exciter regulation factor, pu
0	Xl	0.0	P-bar leakage reactance, pu
6.3	Vbmax	8.0	Maximum excitation voltage

Model Name: ggov1

Description General governor model

Prerequisites: Generator model ahead of this model in the dynamic models table

Inputs: Shaft speed

Invocation: `ggov1 [<n>] (<name> <kv>) <id> : [nwcap=<value>]`

Parameters:

EPCL Default Variable Data			*Description*
0.05	r	0.04	Permanent droop, p.u.
1	rselect	1.0	Feedback signal for droop = 1 selected electrical power = 0 none (isochronous governor) = -1 fuel valve stroke (true stroke) = -2 governor output (requested stroke)
1	Tpelec	1.0	Electrical power transducer time constant, sec.
0.05	maxerr	0.05	Maximum value for speed error signal
-0.05	minerr	-0.05	Minimum value for speed error signal
10	Kpgov	10.0	Governor proportional gain
2	Kigov	2.0	Governor integral gain
0	Kdgov	0.0	Governor derivative gain
1	Tdgov	1.0	Governor derivative controller time constant
1	vmax	1.0	Maximum valve position limit
0.15	vmin	0.15	Minimum valve position limit
0.5	Tact	0.5	Actuator time constant
1.5	Kturb	1.5	Turbine gain
0.18	wfnl	0.2	No load fuel flow, p.u
0.5	Tb	0.5	Turbine lag time constant
0	Tc	0.0	Turbine lead time constant
0	Flag	1.0	Switch for fuel source characteristic = 0 for fuel flow independent of speed = 1 fuel flow proportional to speed
0	Teng	0.0	Transport lag time constant for diesel engine

3	Tfload	3.0	Load Limiter time constant
1	Kpload	2.0	Load limiter proportional gain for PI controller
0.2	Kiload	0.67	Load limiter integral gain for PI controller
1	Ldref	1.0	Load limiter reference value p.u.
0	Dm	0.0	Speed sensitivity coefficient, p.u.
1	ropen	10	Maximum valve opening rate, p.u./sec.
-1	rclose	-0.1	Minimum valve closing rate, p.u./sec.
0.01	Kimw	0.002	Power controller (reset) gain
0	Pmwset	80.0	Power controller setpoint, MW
0.01	aset	0.01	Acceleration limiter setpoint, p.u./sec.
10	Ka	10.0	Acceleration limiter Gain
1	Ta	0.1	Acceleration limiter time constant, sec.
0	db	0.0	Speed governor dead band
4.0	Tsa	4.0	Temperature detection lead time constant, sec.
5.0	Tsb	5.0	Temperature detection lag time constant, sec.
99.0	rup	99.0	Maximum rate of load limit increase
-99.0	rdown	-99.0	Maximum rate of load limit decrease

Model Name: pss2a

Description Dual input Power system stabilizer (IEEE type PSS2A)

Prerequisites: Generator model ahead of this model in dynamic models table

Inputs: Generator shaft speed Frequency of generator terminal or system bus voltage
Generator electric power or accelerating power
Voltage amplitude of generator terminal bus or system bus
Current amplitude specified branch

Invocation: `pssea [<n>] {<name> <kv>} <id> :`

Parameters:

EPCL Default Variable	*Data*	*Description*
1	J1	1.0 Input signal #1 code
0	K1	0.0 Input signal #1 remote bus number
3	J2	3.0 Input signal #2 code
0	K2	0.0 Input signal #2 remote bus number
2	Tw1	2.0 First washout on signal #1, sec.
2	Tw2	2.0 Second washout on signal #1, sec.
2	Tw3	2.0 First washout on signal #2, sec.
0	Tw4	0.0 Second washout on signal #2, sec.
0	T6	0.0 Time constant on signal #1, sec.
2	T7	2.0 Time constant on signal #2, sec.
0.206	Ks2	0.2 Gain on signal #2
1	Ks3	1.0 Gain on signal #2
1	Ks4	1.0 Gain on signal #2
0.5	T8	0.5 Lead of ramp tracking filter
0.1	T9	0.1 Lag of ramp tracking filter
1	n	1.0 Order of ramp tracking filter

5	m	5.0	Order of ramp tracking filter
15	Ks1	10.0	Stabilizer gain
0.2	T1	0.25	Lead/lag time constant, sec.
0.03	T2	0.04	Lead/lag time constant, sec.
0.1	T3	0.2	Lead/lag time constant, sec.
0.02	T4	0.03	Lead/lag time constant, sec.
0.1	Vstmax	0.1	Stabilizer output max limit, p.u.
-0.1	Vstmin	-0.1	Stabilizer output min limit, p.u.
1.0	a	1.	Lead/lag num. Gain. (not in IEEE model)
0	Ta	0.	Lead/lag time constant, sec. (not in IEEE model)
0	Tb	0.	Lead/lag time constant, sec. (not in IEEE model)

SIZE	DWG NO	SH	REV
A	378A4572	2	-

ESTIMATED GENERATOR DATA

Customer: CALPINE
Station/Project: OTAY MESA
Generator Number: 337X848
Generator Type: 7FH2 LU

GENERATOR RATING

Data for Proposal/Hs/Electrical Design: F817T60 Aug 23 2001

ATB 2 234000 kVA 3000 RPM 18000 Volts 0.85 PF 30 psig 40 °C Gas 199900 kW 7505 Amps
359 Field Volts 204 Ft Air 0.489 SCR 60 Hz 3 Phase WYE Connection

Exciter Rating

Type Static
720 kW 350 Volts 2057 D.C.Amps Field Amps @ Generator rated Load 1683

Total temperatures are guaranteed not to exceed:	Insulation Class		Temperature Rise
Stator coils: 100 °C by embedded detector	Armature	F	B
Field coils 110 °C by Resistance	Field class	F	B
Collector Gas Rise 20 °C by RTD			

Cooling water Requirements @ Generator Rating (C901 - Data)

(Data not applicable for Open Ventilated Units. Air cooled OV units, values will be shown as –99999)

Generator Output:	234000	Kva
Loss to Coolers:	1919	Kw
Inlet Water Temperature:	31.5	°C
Outlet Cold Gas Temperature	40	°C
Coolant	33% PROPYLENE-GLYCOL	
Maximum Fouling Factor:	0.001 1/(btu / (hours*footsquared*F))	
Total Water Flow Required:	1760	GPM (total for all coolers)
Coolant temperature Max	55	°C
Head Loss Per Cooler:	22.2	Feet of Water
Maximum Operating Pressure:	125	psig
	8.6184	bar

Dielectric tests: (Between coils and ground, 50/60 hertz AC for 1 min)
Stator 37000V
Rotor 3299V

GENERAL ELECTRIC COMPANY	SIZE	CAGE CODE	DWG NO
GE POWER GENERATION SCHENECTADY, NY	A		378A4572
DRAWN: RSE			
ISSUED: RSE	SCALE		SHEET 2

SIZE	DWG NO	SH	REV
A	378A4572	3	-

REACTANCES (Per Unit):	Direct Axis		Quadrature Axis	
Saturated Synchronous	X_{dv}	2.12	X_{qv}	2.02
Unsaturated Synchronous	X_{dl}	2.12	X_{ql}	2.02
Saturated Transient	X'_{dv}	0.23		
Unsaturated Transient	X'_{dl}	0.26	X'_{q}	0.465
Saturated Sub transient	X''_{dv}	0.15	X''_{qv}	0.15
Unsaturated Sub transient	X''_{dl}	0.195	X''_{ql}	0.195
Saturated Negative Sequence	X_{2v}	0.15		
Unsaturated Negative Sequence	X_{2l}	0.195		
Saturated Zero Sequence	X_{0v}	0.125		
Unsaturated Zero Sequence	X_{0l}	0.125		
Saturated Leakage Reactance	X_{lv}	0.135		
Unsaturated Leakage Reactance	X_{l}	0.15		

X''_d

FIELD TIME CONSTANTS (Seconds @ 125 °C)				
Open Circuit	T'_{d0}	5.7	T'_{q0}	0.59
Three Phase Short Circuit Transient	T'_{d3}	0.62	T'_{q}	0.19
Line To Line Short Circuit Transient	T'_{d2}	0.96		
Line To Neutral Short Circuit Transient	T'_{d1}	1.2		
Short Circuit Sub transient	T''_{d}	0.023	T''_{q}	0.023
Open Circuit Sub transient	T''_{d0}	0.034	T''_{q0}	0.069

ARMATURE DC COMPONENT TIME CONSTANTS (Seconds @ 100 °C)		
Three Phase Short Circuit	T_{a3}	0.33
Line To Line Short Circuit	T_{a2}	0.33
Line To Neutral Short Circuit	T_{a1}	0.31

ARMATURE WINDING SEQUENCE RESISTANCES (Per Unit)		
Positive	R_1	0.0031
Negative	R_2	0.0203
Zero	R_0	0.0108

Reactance, Resistance and Time Constant data may be interpreted per IEEE 115, section VII.

The base reactance ("UNIT") is calculated by the armature kV squared / MVA.

Base reactance = 1.3846 Ohms

Rotor Short-Time Thermal Capacity, $(I_2)^2t$	10 s
Turbine-Generator Combined Inertia Constant, H	4.844 kW-s/kVA
Three Phase Armature Winding Capacitance	0.8062 µF
Armature Winding DC Resistance (Per Phase)	0.0017 Ω (100 °C)
Field Winding DC Resistance	0.196 Ω (125 °C)
Field Current At Rated Kva, Armature Voltage, & PF	1693 A
Field Current At Rated Kva, Armature Voltage, 0 PF Lagging	2014 A
(For Systems Study Only - Not Allowable Operating Point)	

GENERAL ELECTRIC COMPANY	SIZE	CAGE CODE	DWG NO
GE POWER GENERATION SCHENECTADY, NY	A		378A4572
DRAWN: RSE			
ISSUED: RSE	SCALE		SHEET 3

SIZE	DWG NO	SH	REV
A	378A4572	4	-

MACHINE SATURATION DATA

S/1.0 = 0.0575

S/1.2 = 0.4411

Machine saturation may be calculated from the data of curves A and B of "ESTIMATED SATURATION AND SYNCHRONOUS IMPEDANCE CURVES".

"S/1.0" is the field amp difference from B to A divided by the field amp of A at 1.0 pu voltage.

X/R RATIO

X/R = 124

X/R ratio equals "XPP/DV" * base reactance / armature DC resistance at 100 C

GENERAL ELECTRIC COMPANY	SIZE	CAGE CODE	DWG NO
GE POWER GENERATION SCHENECTADY, NY	A		378A4572
DRAWN: RSE			
ISSUED: RSE	SCALE		SHEET 4

SIZE	DWG NO	SH	REV
A	378A4572	5	-

ESTIMATED SATURATION AND SYNCHRONOUS IMPEDANCE CURVES

2 Pole 3600 RPM 234000 KVA 18000 Volts 0.850 PF - N/A b/c
0.489 SCR 30.00 PSIG H2 Pressure 250 Volts Excitation
40 Deg. C Cold Gas 670 Ft. Altitude

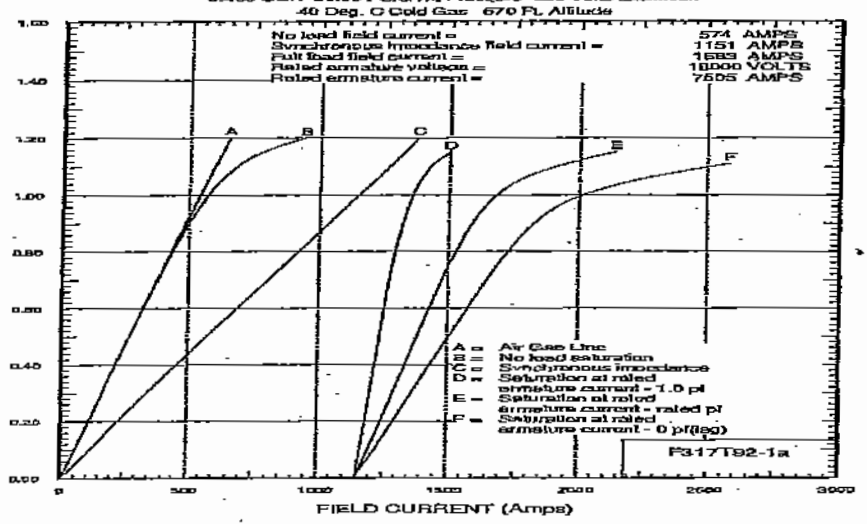

GENERAL ELECTRIC COMPANY	SIZE	CAGE CODE	DWG NO
GE POWER GENERATION SCHENECTADY, NY	A		378A4572
DRAWN RSE			
ISSUED RSE	SCALE		SHEET 5

SIZE	DWG NO	SH	REV
A	378A4572	6	

ESTIMATED REACTIVE CAPABILITY CURVES

2 Pole 3600 RPM 294000 kVA 18000 Volts 0.850 PF
0.489 SCR 30.00 PSIG H2 Pressure 350 Volts Excitation
40 Deg. C Cold Gas 670 Ft. Altitude

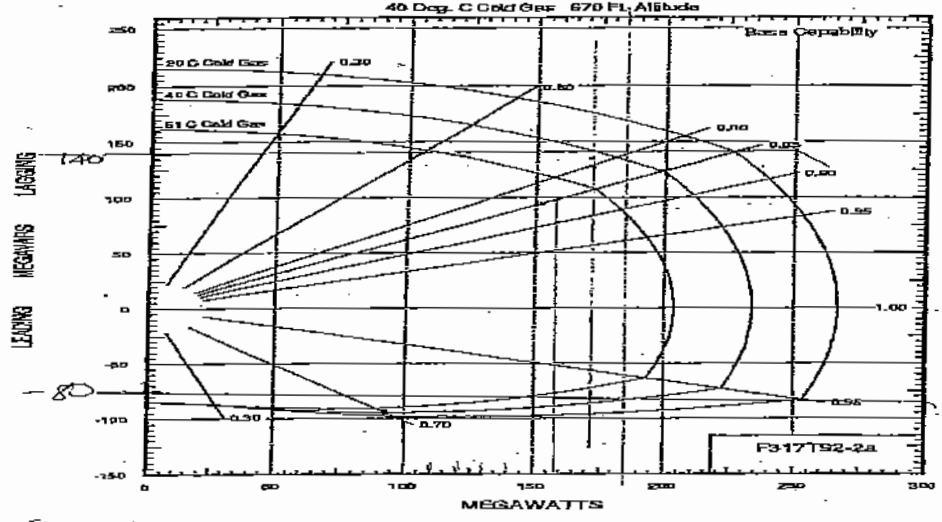

8 max
6 min

GENERAL ELECTRIC COMPANY	SIZE	CAGE CODE	DWG NO
GE POWER GENERATION SCHENECTADY, NY	A		378A4572
DRAWN RSE			
ISSUED RSE	SCALE		SHEET 6

SIZE	DWG NO	SH	REV
A	378A4572	7	-

ESTIMATED VEE CURVES

2 Pole 3600 RPM 234000 kVA 18000 Volts 0.850 PF
0.489 SCR 30.00 PSIG H2 Pressure 350 Volts Excitation
40 Deg. C Cold Gas 670 Ft. Altitude

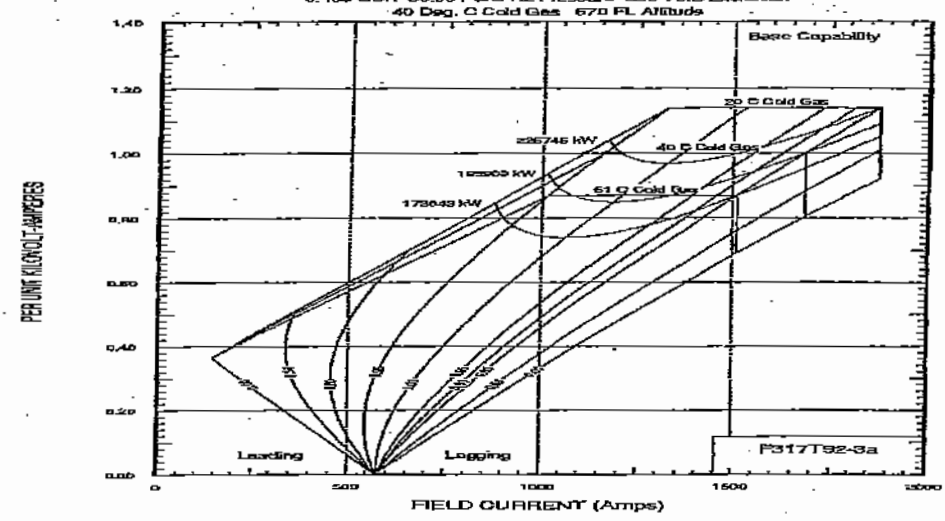

GENERAL ELECTRIC COMPANY	SIZE	CAGE CODE	DWG NO
GE POWER GENERATION SCHENECTADY, NY	A		378A4572
DRAWN RSE			
ISSUED RSE	SCALE		SHEET 7

SIZE	DWG NO	SH	REV
A	37BA4572	8	-

ESTIMATED THREE-PHASE SHORT CIRCUIT DECREMENT CURVE

2 Pole 3600 RPM 234000 kVA 15000 Volts 0.850 PF

0.489 SCR 30.00 PSIG H2 Pressure 350 Volts Excitation

40 Deg. C Cold Gas 670 Ft. Altitude

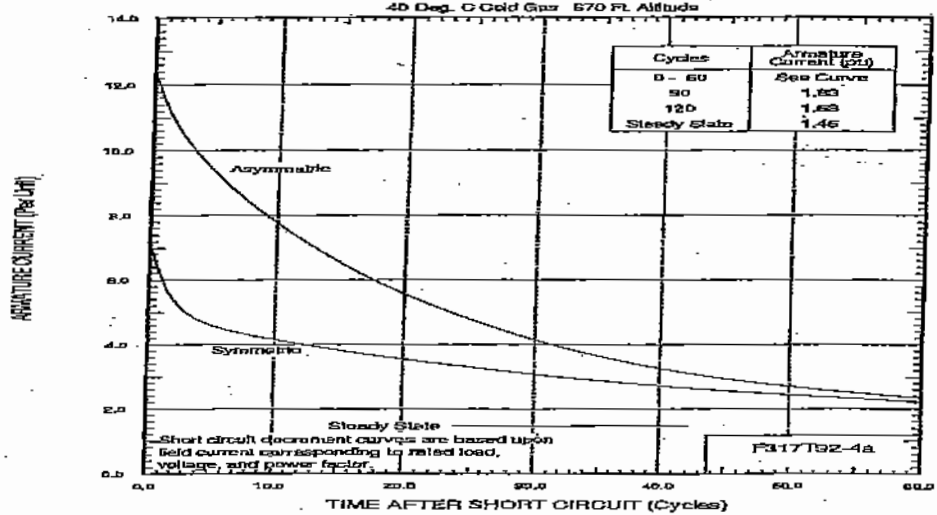

Cycles	Armature Current (pu)
0 - 60	See Curve
90	1.63
120	1.63
Steady State	1.46

GE POWER GENERATION	GENERAL ELECTRIC COMPANY SCHENECTADY, NY	SIZE A	CAGE CODE	DWG NO 37BA4572
DRAWN RSE				
ISSUED RSE		SCALE		SHEET 8

SIZE	DWG NO	SH	REV
A	37BA4572	9	-

ESTIMATED LINE-LINE SHORT CIRCUIT DECREMENT CURVE

2 Pole 3600 RPM 234000 kVA 18000 Volts 0.850 PF
0.489 SCR 30.00 PSIG H2 Pressure 350 Volts Excitation
40 Deg. C Cold Gas 570 FL Altitude

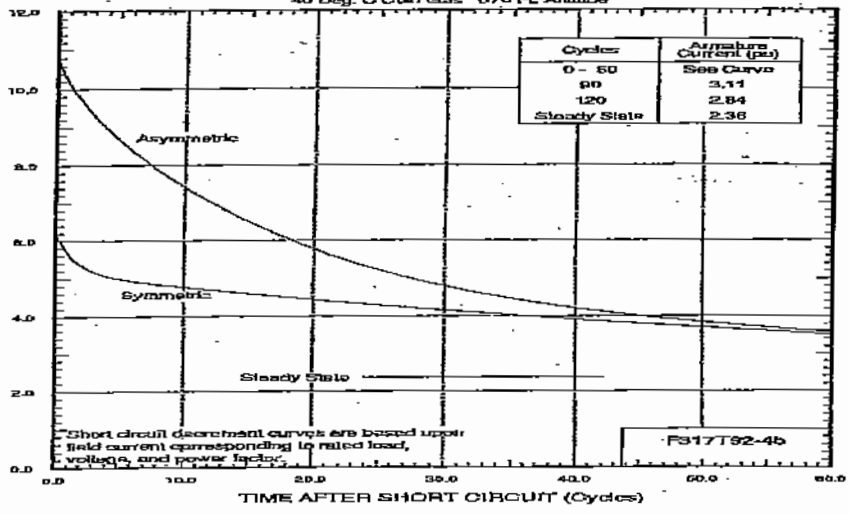

Cycles	Armature Current (pu)
0 - 50	See Curve
90	3.11
120	2.84
Steady State	2.36

*Short circuit decrement curves are based upon field current corresponding to rated load, voltage, and power factor.

GENERAL ELECTRIC COMPANY	SIZE	CAGE CODE	DWG NO
GE POWER GENERATION SCHENECTADY, NY	A		37BA4572
DRAWN RSE			
ISSUED RSE	SCALE		SHEET 9

SIZE	DWG NO	SH	REV
A	37BA4572	10	-

ESTIMATED LINE-NEUTRAL SHORT CIRCUIT DECREMENT CURVE

2 Pole 3600 RPM 234000 kVA 18000 Volts 0.850 PF
0.489 SCR 30.00 PSIG H2 Pressure 350 Volts Excitation
40 Deg. C Cold Gas 670 Ft. Altitude

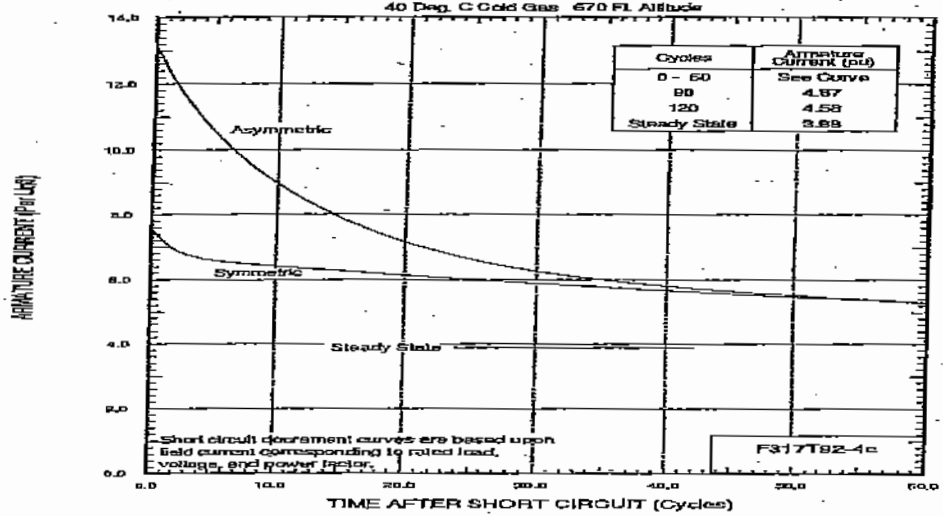

Cycles	Armature Current (pu)
0 - 60	See Curve
90	4.67
120	4.58
Steady State	3.88

GE POWER GENERATION	GENERAL ELECTRIC COMPANY SCHENECTADY, NY	SIZE A	CAGE CODE	DWG NO 37BA4572
DRAWN RSE				
ISSUED RSE		SCALE		SHEET 10

SIZE	DWG NO	SH	REV
A	378A4572	11	-

GENERATOR LOSS CURVE

2 Pole 3600 RPM 234000 KVA 18000 Volts 0.850 PF
0.489 SCR 30.00 PSIG H2 Pressure 350 Volts Excitation
40 Deg. C Cold Gas 670 Ft. Altitude

Cold Gas Temperature (C)	Delta Fan and Windage Losses (KW) (See a)
40	0
20	12
51	-11

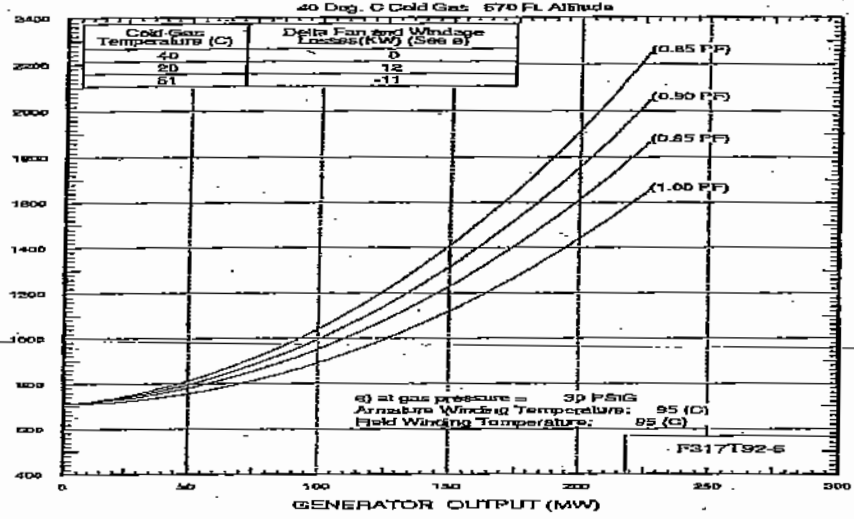

GENERAL ELECTRIC COMPANY	SIZE	CAGE CODE	DWG NO
GE POWER GENERATION SCHENECTADY, NY	A		378A4572
DRAWN RSE			
ISSUED RSE	SCALE		SHEET 11

SIZE	DWG NO	SH	REV
A	37BA4572	12	-

GENERATOR OUTPUT AS A FUNCTION OF COLD GAS TEMPERATURE

2 Pole 3600 RPM 234000 kVA 18000 Volts 0.850 PF
0.489 SCR 30.00 PSIG H2 Pressure 350 Volts Excitation
40 Deg. C Cold Gas 670 Ft. Altitude

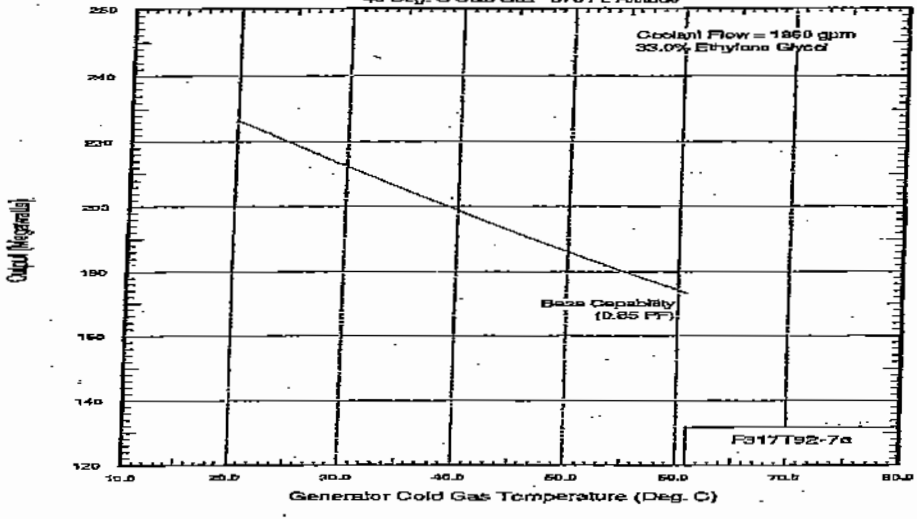

GENERAL ELECTRIC COMPANY	SIZE	CAGE CODE	DWG NO
GE POWER GENERATION SCHENECTADY, NY	A		37BA4572
DRAWN RSE			
ISSUED RSE	SCALE		SHEET 12

SIZE	DWG NO	SH	REV
A	378A4572	13	-

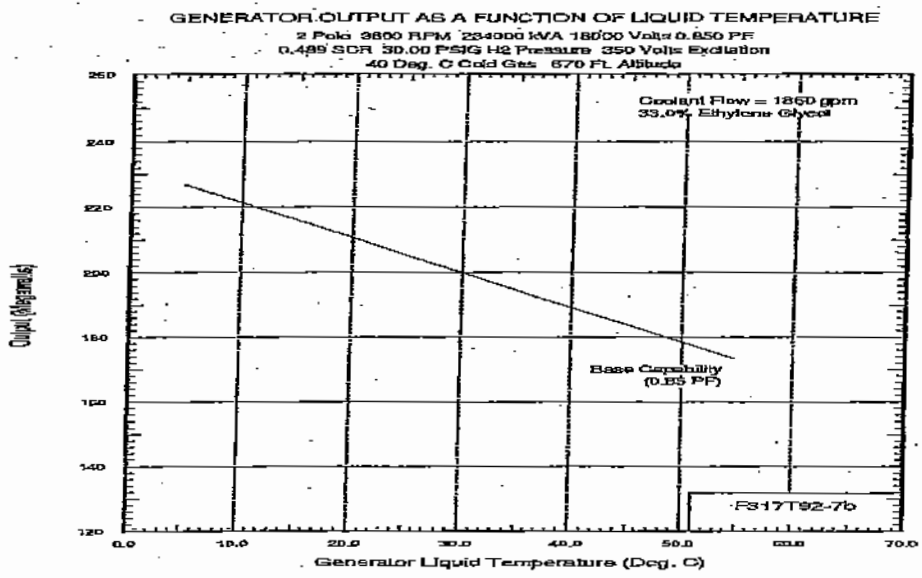

GENERAL ELECTRIC COMPANY	SIZE	CAGE CODE	DWG NO
GE POWER GENERATION SCHENECTADY, NY	A		378A4572
DRAWN RSE			
ISSUED RSE	SCALE		SHEET 13

SIZE	DWG NO	SH	REV
A	378A4572	14	-

COLD LIQUID TEMPERATURE VS. COLD GAS TEMPERATURE

2 Pole 3600 RPM 234000 KVA 18000 Volts 0.850 PF
0.469 SCR 30.00 PSIG H2 Pressure 350 Volts Excitation
40 Deg. C Cold Gas 670 Ft. Altitude

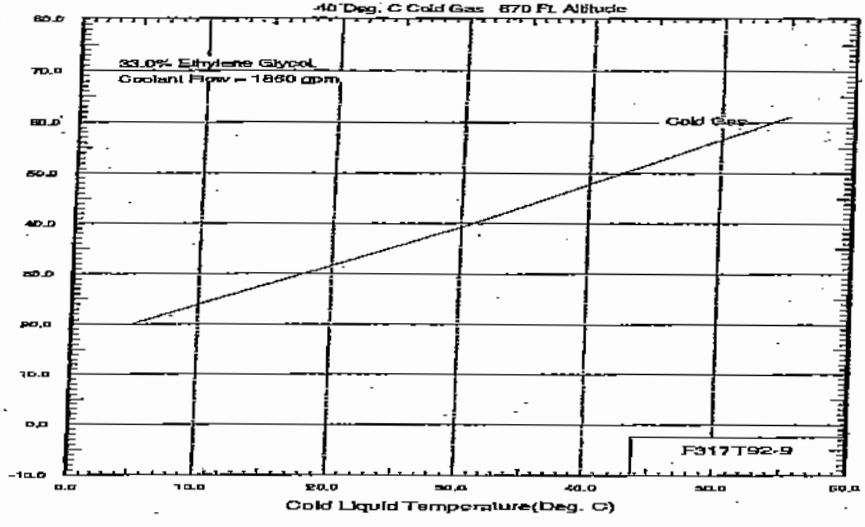

GENERAL ELECTRIC COMPANY	SIZE	CAGE CODE	DWG NO
GE POWER GENERATION SCHENECTADY, NY	A		378A4572
DRAWN RSE			
ISSUED RSE	SCALE		SHEET 14

SIZE	DWG NO	SH	REV
A	378A4572	15	-

GENERATOR EFFICIENCY CURVE

2 Pole 3600 RPM 224000 kVA 18000 Volts 0.850 PF
0.489 SCR 30.00 PSIG H2 Pressure 350 Volts Excitation
40 Deg. C Cold Gas 670 Ft. Altitude

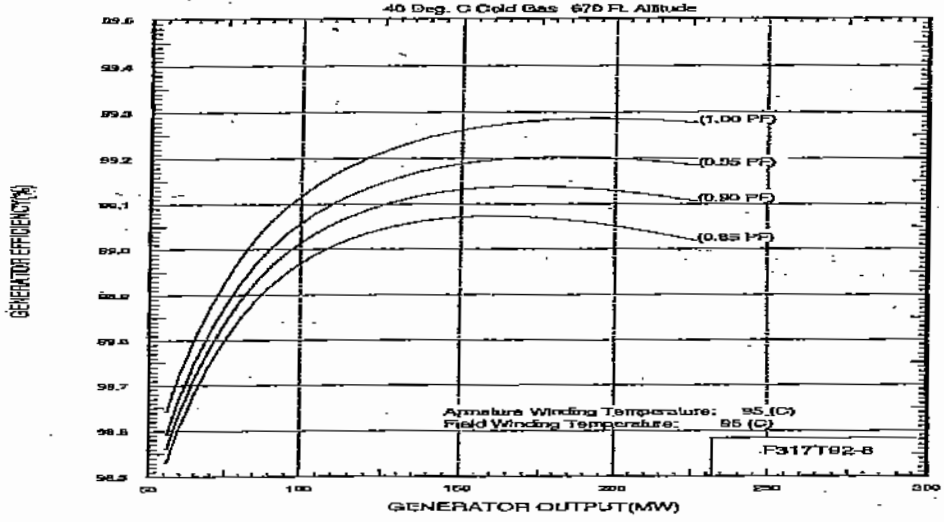

GE POWER GENERATION — GENERAL ELECTRIC COMPANY SCHENECTADY, NY	SIZE A	CAGE CODE	DWG NO 378A4572
DRAWN RSE			
ISSUED RSE	SCALE		SHEET 15

Location
unit
Generator
Design

7FA GT
7FH2 GTGenerator
317P19 7FH2

MVA Rating	234	KV Rating	18
RPM	3600	PF	0.85
[illegible]	0.49	H2PSI	30
DC	950	RPG at 100 C	0.19
[illegible] amps	548.9	AFFL amps	1616.9

EX2000 Bushed Exciter Model Parameters

IEEE ST4B Model Form

TR	0	Exciter Nominal Response at rated input	2
KPR	3.96	KC	0.13
VRMAX	1	KIR	3.96
TA	0.01	VRMIN	-0.87
KPM	1	KG	0
VMMAX	1	KIM	0
KP	5.05	VMIMIN	-0.87
VBMAX	6.31	KI	0
		XL	0

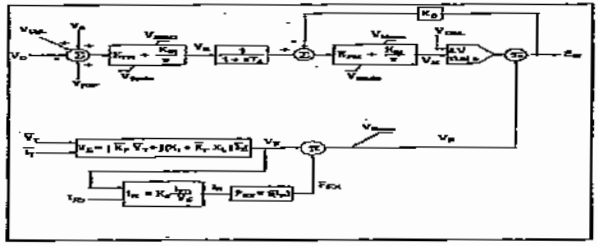

Harold C. Sanderson
GE Excitation/Controls Engineering
ex2000

7FH2_1 .xls

1/11/00 9:21

TR	AC sensor time constant
KPR	AVR proportional gain
KIR	AVR integral gain
VRMAX	Maximum AVR Output
VRMIN	Minimum AVR output
TA	AVR time constant
KG	Field voltage feedback gain
KPM	Inner loop proportional gain
KIM	Inner loop integral gain
VMMAX	Maximum inner loop output
VMIMIN	Minimum inner loop output
VBMAX	Maximum source voltage
KP	Potential source constant
KI	Current source constant
XL	Source leakage reactance
KC	Rectifier loading factor
VS	Stabilizing input
VOEL	Over Excitation limit input
VUEL	Under excitation limit input
VC	Compensated terminal voltage
VREF	Terminal voltage setpoint
EFD	Field voltage
	Field current
	Terminal voltage
IT	Terminal current

genrou	
mva	234
tpdo	4.787
tppdo	0.033
tpqo	0.409
tppqo	0.071
h	4.844
d	0
id	2.14
iq	2.042
ipd	0.322
ipq	0.497
ippd	0.228
ll	0.189
s1	0.055
s12	0.231
ra	0.004
rcomp	0
xcomp	0
ecogl	0.4

exst4b	
tr	0
kpr	3.97
kir	3.97
vrmax	0.01
vrmin	1
ta	-0.87
kg	1
kpm	0
kim	1
vmmax	-0.87
vmmin	0
kp	5.04
theta-p	0
k1	0
xl	0.08
vbmax	0
kc	6.3

pss2a	
j1	1
k1	0
j2	3
k2	0
tw1	2
tw2	2
tw3	2
tw4	0
t6	0
t7	2
ks2	0.206
ks3	1
ks4	1
t8	0.5
t9	0.1
n	1
m	5
ks1	15
t1	0.2
t2	0.03
t3	0.1
t4	0.02
vstmax	0.1
vstmin	-0.1

ggov1	
r	0.05
rselect	1
tpelec	1
maxerr	0.08
minerr	-0.05
kpgov	10
kigov	2
kdgov	0
tdgov	1
vmax	1
vmin	0.15
tact	0.5
kturb	1.5
wfnl	0.18
tb	0.6
tc	0
flag	0
teng	0
tfload	3
kpload	1
kiload	0.2
idref	1
dm	0
ropen	1
rclose	-1
kimw	0.01
pmwset	0
aset	0.01
ka	10
tact	1
db	0

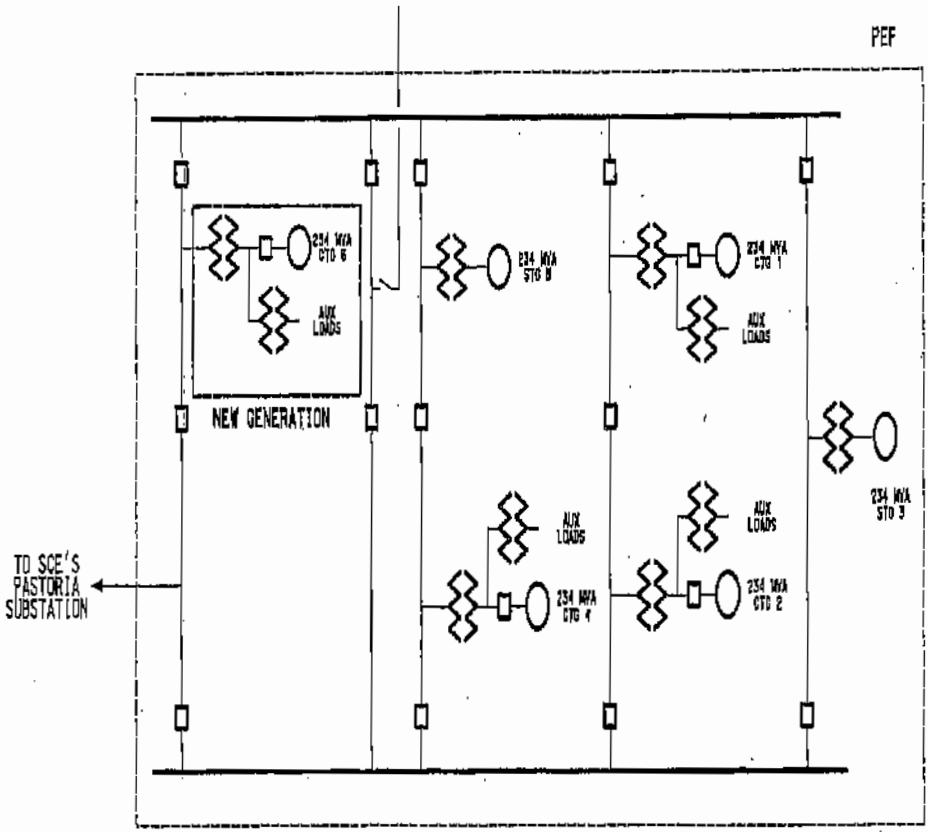

PASTORIA ENERGY FACILITY 1X0 EXPANSION