Section 2.0
Project Description

SECTION 2.0

Project Description

The Walnut Creek Energy Park (WCEP) will be a nominal 500-megawatt (MW) peaking facility consisting of five GE Energy LMS100 natural gas-fired turbine-generators and associated equipment. The facility will be located at 911 Bixby Drive in the City of Industry (City), Los Angeles County, California, on an 11.48-acre parcel currently owned by the Industry Urban Development Agency (Development Agency). The parcel is entirely covered with a large warehouse building and asphalt paving and is currently in use as a commercial distribution warehouse. The Development Agency has planned this parcel for redevelopment and plans to demolish the existing structure in the near future. Edison Mission Energy has entered into a lease option agreement for the project site. The lease option will be assigned to and exercised by Walnut Creek Energy, LLC (WCE), who will take physical possession of the site from the Development Agency after this demolition has taken place. The City is in the process of reviewing a Negative Declaration for the demolition in order to make the parcel available for a higher-value industrial use.

The WCEP will be located in an area zoned for industrial uses. The legal description of the project site is provided in Appendix 1A. The project site is located within the boundaries of the La Puente Mexican land grant rancho and so does not have a township, range, and section designation. The County Assessor's parcel designation is Los Angeles County 8242-013-901. Mailing address labels for all property owners within 1,000 feet of the site boundaries or 600 feet of the project linears are provided in Appendix 1B. Figure 2.1-1 shows the project site plan and appurtenant facilities, including the electric transmission line, natural gas supply line, reclaimed water supply line, potable water supply line, and waste water disposal line. Three of these appurtenant facilities will connect to utility lines located on easements within the project parcel (natural gas, sanitary sewer, non-reclaimable waste water). Two others (reclaimed water and potable water) will connect to utility lines located within a few feet of the project boundary.

WCEP will connect to Southern California Edison's (SCE) electrical transmission system at the Walnut Substation, which is approximately 250 feet south of the project site. This connection will require 600 feet of 230-kilovolt (kV) transmission line and two transmission towers to be located adjacent to the substation within SCE's transmission corridor. Interconnection at this specific substation minimizes downstream impacts to the SCE's transmission system while providing efficient peaking power for use during peak demand as projected by SCE.

Reclaimed water for cooling tower and evaporative cooler makeup, site landscape irrigation, and demineralized water makeup will be supplied via a direct connection to a 12-inch-diameter reclaimed water pipeline at the corner of Bixby Drive and Chestnut Street, adjacent to the project entrance, through a 12-inch-diameter pipe extending approximately 30 feet from the project boundary into Bixby Drive. The Rowland Water District will supply, on average, approximately 827 acre-feet per year (afy) of reclaimed water for the project from the San Jose Creek Wastewater Reclamation Plant. Appendix 7A contains a "will-serve" letter from the District.

The project will connect with Southern California Gas Company's (SoCalGas's) natural gas pipeline via a 14-inch-diameter connection to a 30-inch-diameter high-pressure pipeline that runs in a utility easement within the WCEP parcel.

Potable water for drinking and sanitary uses will be provided through a 30-foot-long, 4-inch-diameter connection to the Rowland Water District's 12-inch water main in Bixby Drive, immediately adjacent to the project site.

Sanitary waste water will be discharged to the Los Angeles County Sanitation District (LACSD) No. 21, Section 3, 48-inch trunk sewer line, which runs in a utility easement within the project site. Process waste water will also be discharged to this sanitary sewer line through a 4-inch-diameter connecting pipe to the trunk sewer line. The sewer line is located within the utility easement adjacent to the railroad track and within the southern boundary of the project site.

2.1 Generating Facility Description, Design, and Operation

This section describes the facility's conceptual design and proposed operation.

2.1.1 Site Arrangement and Layout

Figure 2.1-1 shows the general arrangement and layout of the facility, and Figures 2.1-2a and 2.1-2b are typical elevation views. Primary access to the site will be provided via Bixby Drive. The project site is located in an industrial area and is surrounded to the south, east, and west, by warehousing and other industrial uses. To the north is an SCE utility corridor for 66-kV transmission lines. Beyond the corridor is the San Jose Creek Flood Control Channel, and beyond that to the north, an intermodal rail/truck terminal. Residential areas are located in the City of La Puente to the north, beyond the industrial areas that are adjacent to the project site, and in unincorporated areas of the Los Angeles County community of Hacienda Heights to the south.

2.1.2 Process Description

The generating facility will consist of five GE Energy LMS100 natural gas-fired combustion turbine-generators (CTGs), each equipped with water injection capability to reduce oxides of nitrogen (NO_x) emissions, selective catalytic reduction (SCR) equipment containing catalysts to further reduce NO_x emissions, and an oxidation catalyst to reduce carbon monoxide (CO) emissions. The total net generating capacity will be 500 MW. Auxiliary equipment will include an inlet air filter house with evaporative cooler, turbine inter-cooler, 5-cell mechanical-draft cooling tower and circulating water pumps, natural gas compressor, generator step-up and auxiliary transformers, and water storage tanks.

Each CTG will generate approximately 100 MW gross at the summer design ambient conditions. The project is expected to have an annual capacity factor of approximately 20 to 40 percent, depending on dispatch to meet customer loads. The generating facility base case heat balance is shown on Figure 2.1-3. This balance is based on an ambient dry bulb temperature of 84 degrees Fahrenheit (°F) (the summer average condition) with evaporative cooling of the inlet combustion air.

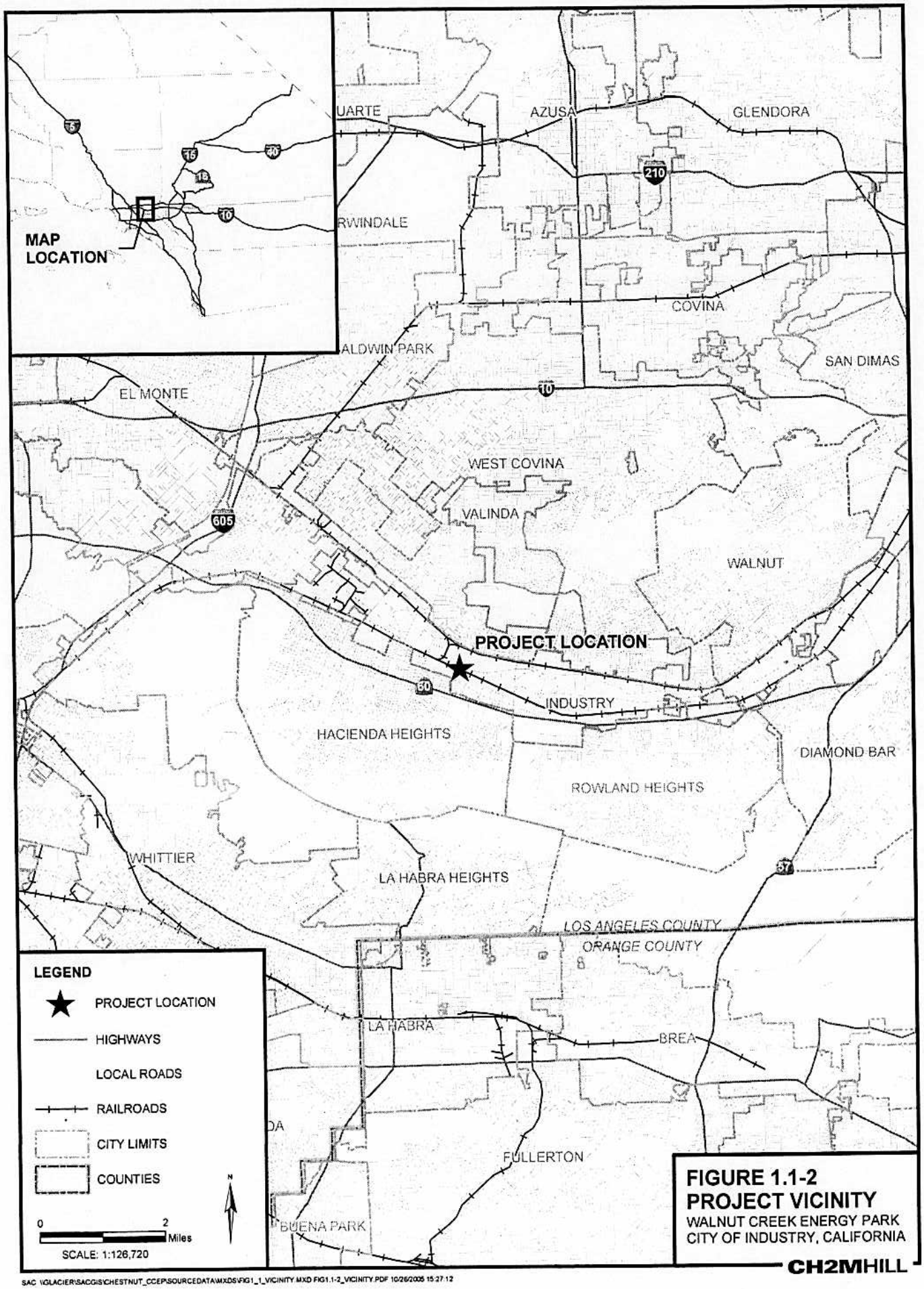

FIGURE 1.1-2
PROJECT VICINITY
WALNUT CREEK ENERGY PARK
CITY OF INDUSTRY, CALIFORNIA

CH2MHILL

SAC \\GLACIER\SACGIS\CHESTNUT_CCEP\SOURCEDATA\MXDS\FIG1_1_VICINITY.MXD FIG1.1-2_VICINITY.PDF 10/26/2005 15:27:12

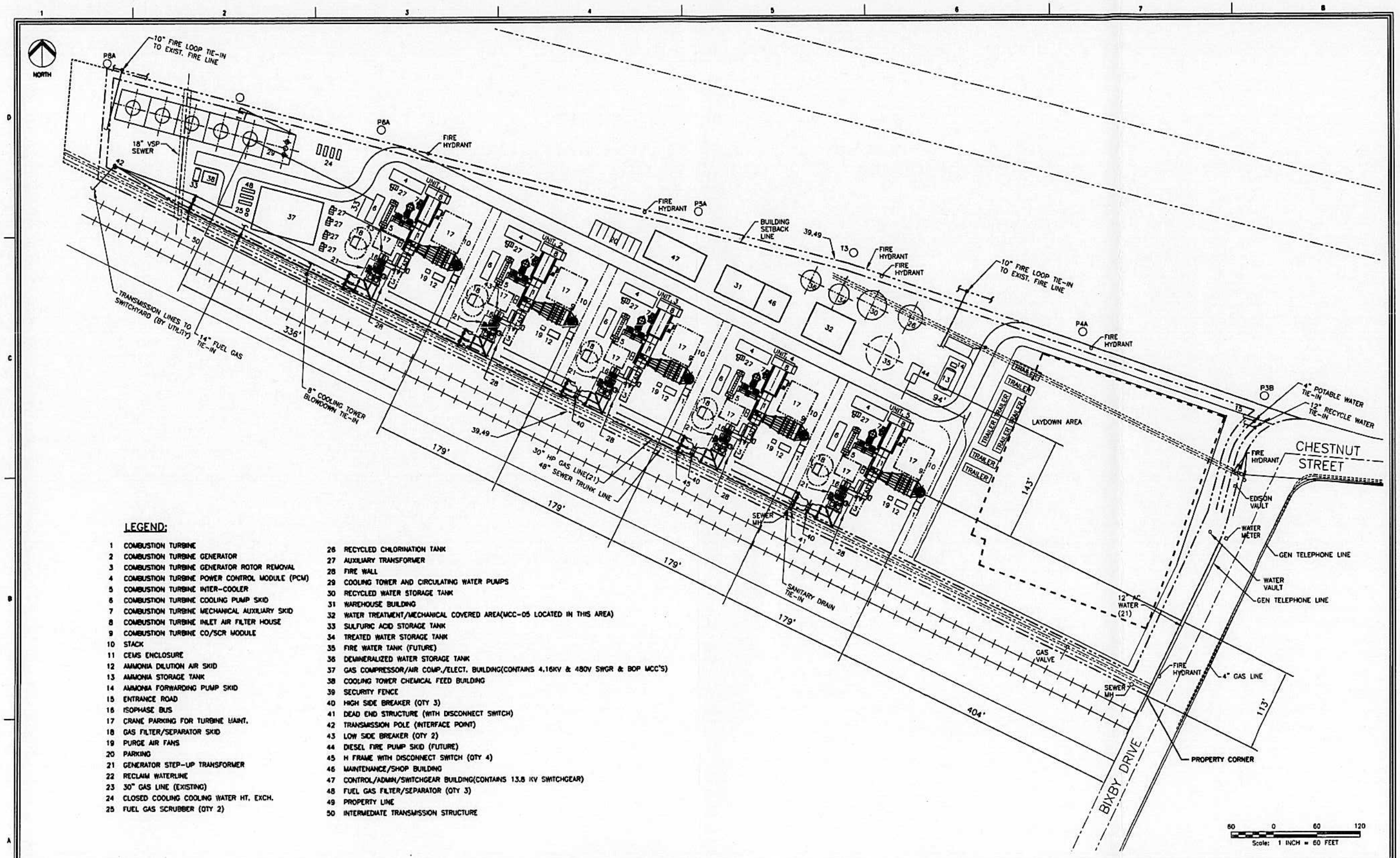

LEGEND:

1 COMBUSTION TURBINE
2 COMBUSTION TURBINE GENERATOR
3 COMBUSTION TURBINE GENERATOR ROTOR REMOVAL
4 COMBUSTION TURBINE POWER CONTROL MODULE (PCM)
5 COMBUSTION TURBINE INTER-COOLER
6 COMBUSTION TURBINE COOLING PUMP SKID
7 COMBUSTION TURBINE MECHANICAL AUXILIARY SKID
8 COMBUSTION TURBINE INLET AIR FILTER HOUSE
9 COMBUSTION TURBINE CO/SCR MODULE
10 STACK
11 CEMS ENCLOSURE
12 AMMONIA DILUTION AIR SKID
13 AMMONIA STORAGE TANK
14 AMMONIA FORWARDING PUMP SKID
15 ENTRANCE ROAD
16 ISOPHASE BUS
17 CRANE PARKING FOR TURBINE MAINT.
18 GAS FILTER/SEPARATOR SKID
19 PURGE AIR FANS
20 PARKING
21 GENERATOR STEP-UP TRANSFORMER
22 RECLAIM WATERLINE
23 30" GAS LINE (EXISTING)
24 CLOSED COOLING COOLING WATER HT. EXCH.
25 FUEL GAS SCRUBBER (QTY 2)
26 RECYCLED CHLORINATION TANK
27 AUXILIARY TRANSFORMER
28 FIRE WALL
29 COOLING TOWER AND CIRCULATING WATER PUMPS
30 RECYCLED WATER STORAGE TANK
31 WAREHOUSE BUILDING
32 WATER TREATMENT/MECHANICAL COVERED AREA(MCC-05 LOCATED IN THIS AREA)
33 SULFURIC ACID STORAGE TANK
34 TREATED WATER STORAGE TANK
35 FIRE WATER TANK (FUTURE)
36 DEMINERALIZED WATER STORAGE TANK
37 GAS COMPRESSOR/AIR COMP./ELECT. BUILDING(CONTAINS 4.16KV & 480V SWGR & BOP MCC'S)
38 COOLING TOWER CHEMICAL FEED BUILDING
39 SECURITY FENCE
40 HIGH SIDE BREAKER (QTY 3)
41 DEAD END STRUCTURE (WITH DISCONNECT SWITCH)
42 TRANSMISSION POLE (INTERFACE POINT)
43 LOW SIDE BREAKER (QTY 2)
44 DIESEL FIRE PUMP SKID (FUTURE)
45 H FRAME WITH DISCONNECT SWITCH (QTY 4)
46 MAINTENANCE/SHOP BUILDING
47 CONTROL/ADMIN/SWITCHGEAR BUILDING(CONTAINS 13.8 KV SWITCHGEAR)
48 FUEL GAS FILTER/SEPARATOR (QTY 3)
49 PROPERTY LINE
50 INTERMEDIATE TRANSMISSION STRUCTURE

NO	DATE	REVISION	BY	CK.	APPR.
D	03-OCT-2005	FOR INFORMATION	JWC		
C	01-SEP-2005	FOR INFORMATION	JWC		
B	05-AUG-2005	FOR INFORMATION	JWC		
A	25-JUL-2005	FOR COMMENT	JWC		

DESIGNED BY J. CRAWFORD
CHECKED BY
APPR. BY
CLIENT APPR.

CH2MHILL
Lockwood Greene
Atlanta, Georgia

SHEET TITLE
WALNUT ARRANGEMENT
500MW-(5) LMS100'S
SIMPLE CYCLE

JOB NAME

EDISON
MISSION ENERGY

FIGURE 2.1-1
SITE PLAN
WALNUT CREEK ENERGY PARK
CITY OF INDUSTRY, CALIFORNIA

CH2MHILL

E092005017SAC_Walnut_Creek_AFC wc_figure_2_1_1.ai 11-01-2005 dash

NORTH

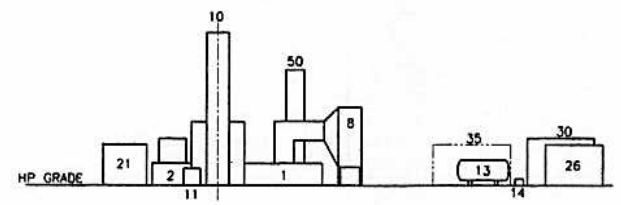

EAST ELEVATION

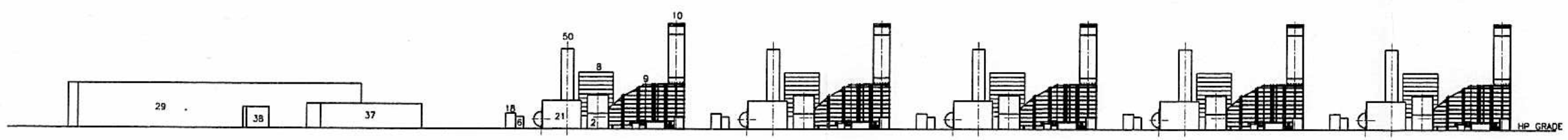

SOUTH ELEVATION

LEGEND:

1 COMBUSTION TURBINE
2 COMBUSTION TURBINE GENERATOR
6 COMBUSTION TURBINE COOLING PUMP SKID
8 COMBUSTION TURBINE INLET AIR FILTER HOUSE
9 COMBUSTION TURBINE CO/SCR MODULE
10 STACK
11 CEMS ENCLOSURE
13 AMMONIA STORAGE TANK
14 AMMONIA FORWARDING PUMP SKID
18 GAS FILTER/SEPERATOR SKID
21 GENERATOR STEP-UP TRANSFORMER
26 RECYCYCLED CLORINATION TANK
29 COOLING TOWER AND CIRCULATING WATER PUMPS
30 RECYCLED WATER STORAGE TANKS
35 FIRE WATER TANK (FUTURE)
37 GAS COMPRESSOR/AIR COMP../ELECT. BUILDING
38 COOLING TOWER CHEMICAL FEED BUILDING
50 VBV STACK

50 0 50 100
Scale: 1 INCH = 50 FEET

NO	DATE	REVISION	BY	CK.	APPR.
A	09-SEP-2005	FOR COMMENT	DWS		

DESIGNED BY D.STREET
CHECKED BY
APPR. BY
CLIENT APPR.

CH2MHILL
Lockwood Greene
Atlanta, Georgia

SHEET TITLE
WALNUT ARRANGEMENT
500MW-(5) LMS100'S
SIMPLE CYCLE

JOB NAME
EDISON
MISSION ENERGY

FIGURE 2.1-2
PLANT ELEVATIONS
WALNUT CREEK ENERGY PARK
CITY OF INDUSTRY, CALIFORNIA

CH2MHILL

E092005017SAC_Walnut_Creek_AFC wc_figure_2_1_2.ai 11-01-2005 dash

NOTES:

1. STREAM DESIGNATION ⬡
2. AVERAGE AMBIENT CONDITIONS: 84 F DBT/ 71F WBT.
3. COMBUSTION TURBINE GENERATOR GROSS OUTPUT AT FULL LOAD IS 98,492 kW EACH.

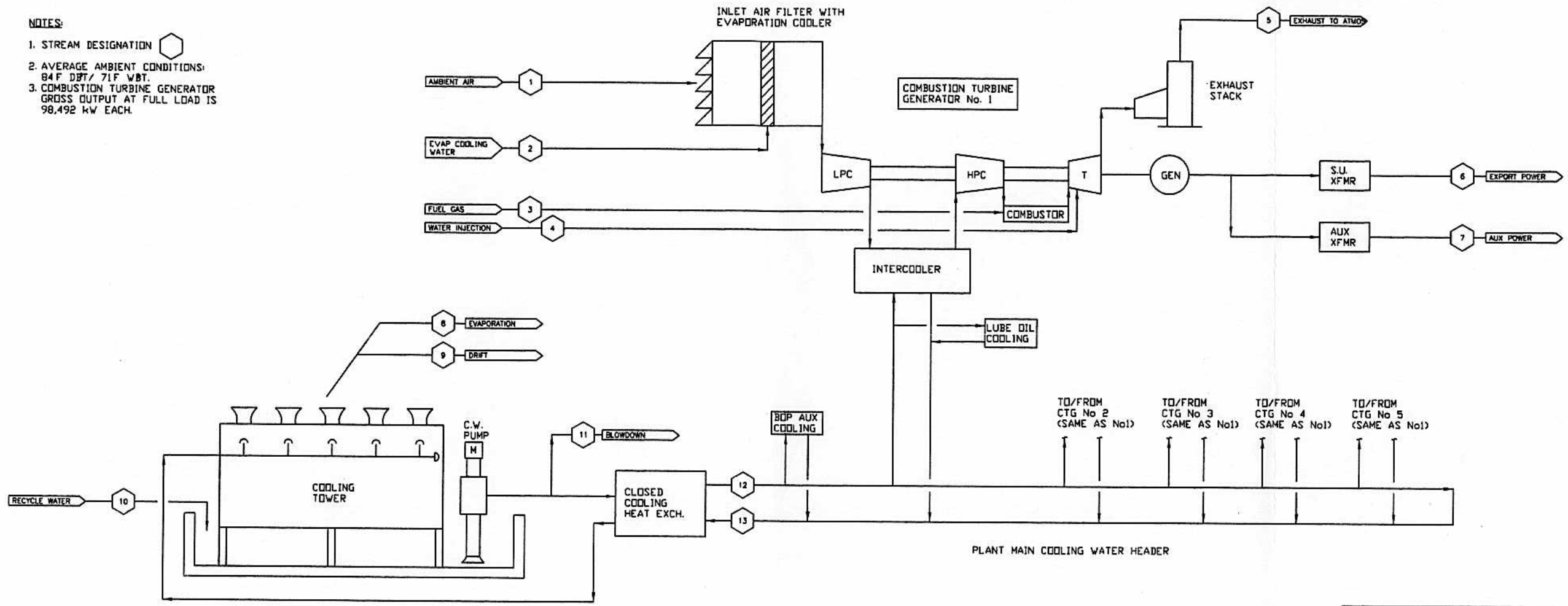

PROGRESS PRINT – NOT CHECKED

PLANT HEAT BALANCE AT AMBIENT CONDITION STATED (2)

		ONE COMBUSTION TURBINE GENERATOR							FIVE (5) COMBUSTION TURBINE GENERATORS												
	UNITS	1	2	3	4	5	6	7	1	2	3	4	5	6	7	8	9	10	11	12	13
FLOW	Lb/HR	1,558,150	7,934	37,896	30,128	1,619,667	-	-	7,790,750	39,670	189,345	150,640	8,098,335	-	-	484,704	-	581,644	96,941	17,675,000	17,675,000
FLOW	GPM	-	15.8	-	60.2	-	-	-	-	79	-	301	-	-	-	969	0.2	1,163	194	35,350	35,350
TEMPERATURE	°F	84	60	100	100	796	-	-	84	60	100	100	796	-	-	-	-	60	85	85	119
HEAT INPUT	MM BTU/ HR-LHV			781.2							3,906										
POWER	KW						95,561	2,931						477,807	14,653						
HEAT RATE	BTU/KWH						8,175							8,175							

NO	DATE	REVISION	BY	CK.	APPR.

DESIGNED BY
CHECKED BY
APPR. BY
CLIENT APPR.

CH2MHILL Lockwood Greene

SHEET TITLE: PLANT HEAT BALANCE WALNUT CREEK

JOB NAME: EDISON MISSION ENERGY 5 x LMS 100 CTG IN SIMPLE CYCLE

FIGURE 2.1-3
HEAT AND MASS BALANCE DIAGRAM
WALNUT CREEK ENERGY PARK
CITY OF INDUSTRY, CALIFORNIA

CH2MHILL

E092005017SAC_Walnut_Creek_AFC wc_figure_2_1_3.ai 11-01-2005 dash

Associated equipment will include emission control systems necessary to meet the proposed emission limits. NO_x emissions will be controlled to 2.5 parts per million by volume, dry basis (ppmvd) corrected to 15 percent oxygen with the combination of water injection in the CTGs and selective catalytic reduction (SCR) systems in the catalyst housing. A CO catalyst will also be installed in the catalyst housing to limit CO emissions from the CTGs to 6 ppmvd at 15 percent oxygen.

2.1.3 Generating Facility Cycle

CTG combustion air flows through the inlet air filter and evaporative cooler and associated air inlet ductwork. The air is then compressed in the gas turbine low-pressure compressor section and cooled through the off-base intercooler before it enters the high-pressure compressor. The compressed air then flows to the CTG combustor. Natural gas fuel is injected into the compressed air in the combustor and ignited. The hot combustion gases expand through the power turbine sections of the CTGs, causing them to rotate, driving the electric generators and CTG compressors. Integrating an intercooler between compressor stages in the LMS100, together with higher combustor firing temperatures, has resulted in gross turbine generator efficiencies of approximately 44 percent. The hot combustion gases exit the turbine sections at approximately 770°F and then pass through the catalyst housing for exposure to NO_x and CO emissions catalysts, and then exit the exhaust stacks.

2.1.4 Combustion Turbine Generators

Electricity is produced by the five CTGs. The following paragraphs describe the major components of the generating facility.

2.1.4.1 Combustion Turbine Generators

Thermal energy is produced in the CTGs through the combustion of natural gas, which is converted into mechanical energy required to drive the combustion turbine compressors and electric generators. Five GE Energy LMS100 CTGs have been selected for WCEP. The LMS100 integrates features of GE Energy's frame and aeroderivative CTG design systems. The low-pressure compressor is derived from the heavy-duty frame engine system and the high pressure compressor, combustor, and power turbine are derived from the aeroderivative system. Each CTG consists of a stationary combustion turbine-generator, and associated auxiliary equipment. The CTGs will be equipped with water injection capability to control NO_x emissions formed in the combustion process. While GE Energy anticipates future units will be capable of using steam injection and Dry Low Emissions (DLE) combustors, these design options are not as suitable for peaking operation. Each CTG will also have a variable bleed valve vent that allows the venting of compressed air to the atmosphere under certain transient compressor operating conditions.

The CTGs will be equipped with the following required accessories to provide safe and reliable operation:

- Evaporative coolers
- Inlet air filters
- Metal acoustical enclosure
- Duplex shell and tube lube oil coolers for the turbine and generator
- Annular combustor combustion system

- Compressor wash system
- Fire detection and protection system
- Compressor intercooler
- Hydraulic starting system
- Water injection system
- Compressor variable bleed valve vent

The metal acoustical enclosure, which contains the CTGs and accessory equipment, will be located outdoors.

2.1.4.2 Catalyst Housing

The catalyst housings, one for each CTG, are equipped with catalyst modules to further reduce emissions. The SCR emission control system will use ammonia vapor in the presence of a catalyst to reduce CTG exhaust gas NO_x. Diluted ammonia (NH_3) vapor will be injected into the exhaust gas stream via a grid of nozzles located upstream of the catalyst module. The subsequent chemical reaction will reduce NO_x to nitrogen and water, resulting in a NO_x concentration in the exhaust gas no greater than 2.5 ppmvd at 15 percent oxygen (on a 3-hour average basis).

An oxidation catalyst will also be installed within the housing to reduce the concentration of CO in the exhaust gas emitted to atmosphere to no greater than 6 ppmvd at 15 percent oxygen. The exhaust from each catalyst housing will be discharged from individual 90-foot-tall, 13.5-foot diameter exhaust stacks.

2.1.5 Major Electrical Equipment and Systems

The bulk of the electric power produced by the facility will be transmitted to the power grid through the 230-kV connection with the SCE Walnut Substation. A small amount of electric power will be used onsite to power auxiliaries such as pumps, natural gas compressors, cooling tower fans, control systems, and general facility loads including lighting, heating, and air conditioning. Some will also be converted from alternating current (AC) to direct current (DC), and will be used as backup power for control systems and other uses.

Power will be generated by the five CTGs at 13.8 kV and stepped up by five fan-cooled generator step-up transformers to 230 kV for transmission to the grid. Auxiliary power will be back-fed through two of the step-up transformers. Once the units are running, they will supply their own auxiliary power. Surge arresters will be provided at the high-voltage bushings to protect the transformers from surges on the 230-kV system caused by lightning strikes or other system disturbances. The transformers will be set on concrete pads within berms designed to contain the non-PCB transformer oil in the event of a leak or spill. Fire protection systems will be provided. The high-voltage side of the step-up transformers will be connected to gas insulated (SF6) circuit breakers then to overhead cables to SCE's substation. From the substation, power will be transmitted to the grid via transmission lines owned by SCE. The transmission connect to the SCE Walnut Substation is approximately 600 feet long and will require a two conductor support towers, to be located adjacent to the Walnut Substation within SCE's existing transmission corridor easement. Section 5.0, Electrical Transmission contains additional information regarding the electrical transmission system as well as a summary of the System Impact Study.

2.1.6 Fuel System

The CTGs will be designed to burn natural gas. Natural gas requirements at the summer average condition of 84°F are approximately 870 million British thermal units per hour (MMBtu/hr), per unit, on a higher heating value (HHV) basis.

Natural gas will be delivered to the site via a connection to the existing 30-inch pipeline located in a utility easement within the project parcel. The natural gas will flow through gas scrubber/filtering equipment, gas compressors, a gas pressure control station, and a flow-metering station prior to entering the combustion turbines. Historical data indicates that gas pressure in SoCalGas's Line 2001 varies between 400 and 600 pounds per square inch gauge (psig). Because of a high compressor pressure ratio, the GE Energy LMS100 unit requires a pressure at the turbine connection of 960 psig, plus or minus 20 psig. Three, 50-percent-capacity onsite electric motor-driven gas compressors will be used to boost the pipeline pressure to the level required by the gas turbine. Additional information about natural gas supply can be found in Section 6.0, Natural Gas Supply.

2.1.7 Water Supply and Use

This section describes the quantity of water required, the source of the water supply, and water treatment requirements. Additional information on water supply and use is found in Section 7.0, Water Supply.

2.1.7.1 Water Requirements

The estimated water usage for the plant is provided in Table 2.1-1.

TABLE 2.1-1
Raw Water Usage

Condition	Expected Usage	
Peak Usage	1,528 gpm	937ac-ft/yr[a]
Average Annual Usage	1,460 gpm	771 ac-ft/yr[b]

[a] At 39 percent capacity factor

[b] At 32 percent capacity factor

2.1.7.2 Water Supply

Reclaimed water for CTG evaporative cooling, landscape irrigation, process system makeup, and cooling will be provided by the Rowland Water District via the existing 12-inch-diameter reclaimed water supply line. Water used for makeup in the circulating water system will be fed directly from the reclaimed water supply line into one 150,000-gallon chlorine contact tank followed by one 150,000-gallon aboveground reclaimed water storage tank. The chlorine contact tank will provide a minimum of 90 minutes contact time and the reclaimed water storage tank will provide approximately 1.5 hours of operational storage in the event there is a disruption in the supply. Water supply reliability is ensured by the Rowland Water District's extensive reclaimed water storage facilities.

2.1.7.3 Water Quality and Treatment

Process water includes the demineralized water used for NO_x injection into the CTG and for evaporative cooling. Potable water will be furnished from the city's water system for drinking and sanitary use and makeup to the plant hose stations.

Water treatment will be provided onsite prior to use for water injection. Demineralized water will be used for NO_x injection water. It will be produced by a reverse osmosis (RO) and Ion Exchange (IX) system and will be stored in a 100,000-gallon demineralized water storage tank. Water quality is described further in Sections 7.0, Water Supply, and 8.15, Water Resources.

WCEP water use can be divided into the following three levels based on the quality required: (1) cooling water, (2) demineralized water for NO_x injection water, and (3) potable water.

2.1.7.4 Cooling Tower System

Makeup water will be pumped from the reclaimed water storage tank to the cooling tower basins as required to replace water lost from evaporation, drift, and blowdown. A chemical feed system will supply water conditioning chemicals to the circulating water to minimize corrosion and control the formation of mineral scale and biofouling. Sulfuric acid will be fed into the circulating water system in proportion to makeup water flow for alkalinity reduction to control the scaling tendency of the circulating water. The acid feed equipment will consist of a bulk sulfuric acid storage tank and two full-capacity sulfuric acid metering pumps.

To further inhibit scale formation, a polyacrylate solution will be fed into the circulating water system as a sequestering agent in an amount proportional to the circulating water blowdown flow. The scale inhibitor feed equipment will consist of a chemical solution bulk storage tank and two full-capacity scale inhibitor metering pumps.

To prevent biofouling in the circulating water system, sodium hypochlorite will be fed into the system. The hypochlorite feed equipment will consist of a bulk storage tank and two full-capacity hypochlorite metering pumps. A small storage tank, or 250-gallon totes, and two full-capacity metering pumps will be provided for the feeding of either stabilized bromine or sodium bromide as alternate biocides.

2.1.8 Plant Cooling Systems

A cooling tower will be provided for the gas turbine auxiliary cooling requirements. Two 50 percent-capacity circulating water pumps will provide water to cool three closed-cooling water heat exchangers rated at approximately 33 percent capacity each. The closed-cooling water heat exchangers will provide high quality cooling water to a GE-provided pump skid for each combustion turbine. The pump skid provides cooling water to the CT compressor intercooler and to the lubrication systems.

2.1.9 Waste Management

Waste management is the process whereby all wastes produced at WCEP are properly collected, treated if necessary, and disposed of. Wastes include wastewater, solid nonhazardous waste, and both liquid and solid hazardous waste. Waste management is discussed in more detail in Section 8.14, Waste Management.

2.1.9.1 Wastewater Collection, Treatment, and Disposal

The primary wastewater collection system will collect process wastewater from all of the plant equipment, including the cooling tower and water treatment equipment. The second wastewater collection system will collect sanitary wastewater from sinks, toilets, showers, and other sanitary facilities, and discharge to the city sanitary sewer system. The two wastewater systems are described below.

2.1.9.1.1 Circulating Water System Blowdown

Circulating water system blowdown will consist of the reclaimed makeup water and other recovered process wastewater streams that have been concentrated by evaporative losses in the cooling tower, and residues of the chemicals added to the circulating water. The cooling tower concentrates these streams near the mineral solubility limit for the constituents of concern (calcium, silica, and total dissolved solids [TDS]). This concentrated water must then be removed from the cooling tower via blowdown to prevent the formation of mineral scale in heat transfer equipment. The chemicals added to the circulating water control scaling and biofouling of the cooling tower and control corrosion of the circulating water piping and intercooler. Cooling tower blowdown will be discharged to the 48-inch sanitary sewer trunk line located in a utility easement within the project parcel.

2.1.9.1.2 Plant Drains and Oil/Water Separator

General plant drains will collect area washdown, sample drains, and drainage from facility equipment areas. Water from these areas will be collected in a system of floor drains, hub drains, sumps, and piping and routed to the wastewater collection system. Drains that potentially could contain oil or grease will first be routed through an oil/water separator. Wastewater from combustion turbine water washes will be collected in a holding tank. If cleaning chemicals were not used during the water wash procedure, the wastewater will be discharged to the oil/water separator and then recycled as makeup to the cooling tower. Wastewater containing cleaning chemicals will be trucked offsite for disposal at an approved wastewater disposal facility.

2.1.9.1.3 Solid Wastes

WCEP will produce maintenance and plant wastes typical of natural gas-fueled power generation operations. Generation plant wastes include oily rags, broken and rusted metal and machine parts, defective or broken electrical materials, empty containers, and other solid wastes, including the typical refuse generated by workers. Recyclable materials will be taken offsite. Waste collection and disposal will be in accordance with applicable regulatory requirements to minimize health and safety effects.

2.1.9.1.4 Hazardous Wastes

Several methods will be used to properly manage and dispose of hazardous wastes generated by WCEP. Waste lubricating oil will be recovered and reclaimed by a waste oil recycling contractor. Spent lubrication oil filters will be disposed of in a Class I landfill. Spent SCR and oxidation catalysts will be reclaimed by the supplier or disposed of in accordance with regulatory requirements. Workers will be trained to handle hazardous wastes generated at the site.

Chemical cleaning wastes will consist of detergent solutions used during turbine washing. These wastes, which are subject to high metal concentrations, will be temporarily stored

onsite in portable tanks and disposed of offsite by the chemical cleaning contractor in accordance with applicable regulatory requirements.

2.1.10 Management of Hazardous Materials

There will be a variety of chemicals stored and used during the construction and operation of WCEP. The storage, handling, and use of all chemicals will be conducted in accordance with applicable laws, ordinances, regulations, and standards (LORS). Chemicals will be stored in appropriate chemical storage facilities. Bulk chemicals will be stored in storage tanks, and other chemicals will be stored in returnable delivery containers. Chemical storage and chemical feed areas will be designed to contain leaks and spills. Berm and drain piping design will allow a full-tank capacity spill without overflowing the berms. For multiple tanks located within the same bermed area, the capacity of the largest single tank will determine the volume of the bermed area and drain piping. Drain piping for volatile chemicals will be trapped and isolated from other drains to eliminate noxious or toxic vapors. After neutralization, if required, water collected from the chemical storage areas will be directed to the cooling tower basin, or trucked offsite for disposal at an approved wastewater disposal facility.

The aqueous ammonia storage area will have spill containment and ammonia vapor detection equipment. Aqueous ammonia will be transported, and stored on site, in a 19 percent solution, by weight.

Safety showers and eyewashes will be provided in the vicinity of all chemical storage and use areas. Hose connections will be provided near the chemical storage and feed areas to flush spills and leaks to the plant wastewater collection system. Approved personal protective equipment will be used by plant personnel during chemical spill containment and cleanup activities. Personnel will be properly trained in the handling of these chemicals and instructed in the procedures to follow in case of a chemical spill or accidental release. Adequate supplies of absorbent material will be stored onsite for spill cleanup.

A list of the chemicals anticipated to be used at the generating facility and their locations is provided in the Hazardous Materials Handling section (Section 8.5). This list identifies each chemical by type, intended use, and estimated quantity to be stored onsite.

2.1.11 Emission Control and Monitoring

Air emissions from the combustion of natural gas in the CTGs will be controlled using state-of-the-art systems. Emissions that will be controlled include NO_x, volatile organic compounds (VOCs), CO, and particulate matter. Section 8.1, Air Quality, includes additional information on emission control and monitoring.

2.1.11.1 NO_x Emission Control

Selective catalytic reduction will be used to control NO_x concentrations in the exhaust gas emitted to the atmosphere to 2.5 ppmvd at 15 percent oxygen from the gas turbines/SCRs. The SCR process will use aqueous ammonia. Ammonia slip, or the concentration of unreacted ammonia in the exiting exhaust gas, will be limited to 5 ppmvd at 15 percent oxygen from the catalyst housing. The SCR equipment will include a reactor chamber,

catalyst modules, ammonia storage system, ammonia vaporization and injection system, and monitoring equipment and sensors.

2.1.11.2 Carbon Monoxide

An oxidizing catalytic converter will be used to reduce the CO concentration in the exhaust gas emitted to the atmosphere to 6 ppmvd at 15 percent oxygen from the gas turbines.

2.1.11.3 Particulate Emission Control

Particulate emissions will be controlled by the use of natural gas, which is low in particulates, as the sole fuel for the CTGs.

2.1.11.4 Continuous Emission Monitoring

Continuous emission monitors (CEMs) will sample, analyze, and record fuel gas flow rate, NO_x and CO concentration levels, and percentage of O_2 in the exhaust gas from the three catalyst housing stacks. This system will generate reports of emissions data in accordance with permit requirements and will send alarm signals to the plant distributed control system (DCS) when emissions approach or exceed pre-selected limits.

2.1.12 Fire Protection

The fire protection system will be designed to protect personnel and limit property loss and plant downtime in the event of a fire. Fire water will be supplied via two 10-inch-diameter connection loop tie-ins with an existing main line at the north project boundary. These connections will be sized in accordance with National Fire Protection Association (NFPA) guidelines to provide 2 hours of protection from the onsite worst-case single fire (2,000 gpm).

Fire water from the water main will be provided to a dedicated underground fire loop piping system. Both the fire hydrants and the fixed suppression systems will be supplied from the fire water loop. Fixed fire suppression systems will be installed at determined fire risk areas. Sprinkler systems will also be installed in the Administration/Maintenance Building as required by NFPA and local code requirements. The CTG units will be protected by a carbon dioxide (CO_2) fire protection system. Hand-held fire extinguishers of the appropriate size and rating will be located in accordance with NFPA 10 throughout the facility. The cooling tower will be constructed of wood and will include a fire protection sprinkler system and a wetting pump to keep the wood wet during periods of inactivity. The project will include a diesel fire pump if the Los Angeles County Fire Department determines this to be necessary.

Section 8.5, Hazardous Materials Handling, includes additional information for fire and explosion risk, and Section 8.10, Socioeconomics, provides information on local fire protection capability.

2.1.13 Plant Auxiliaries

The following systems will support, protect, and control the generating facility.

2.1.13.1 Lighting

The lighting system provides personnel with illumination for operation under normal conditions and for egress under emergency conditions, and includes emergency lighting to perform manual operations during an outage of the normal power source. The system also provides 120-volt convenience outlets for portable lamps and tools.

2.1.13.2 Grounding

The electrical system is susceptible to ground faults, lightning, and switching surges that result in high voltage that constitute a hazard to site personnel and electrical equipment. The station grounding system provides an adequate path to permit the dissipation of current created by these events.

The station grounding grid will be designed for adequate capacity to dissipate heat from ground current under the most severe conditions in areas of high ground fault current concentration. The grid spacing will maintain safe step voltage gradients.

Bare conductors will be installed below-grade in a grid pattern. Each junction of the grid will be bonded together by an exothermic weld or compression connection.

Ground resistivity readings will be used to determine the necessary numbers of ground rods and grid spacing to ensure safe step and touch potentials under severe fault conditions.

Grounding stingers will be brought from the ground grid to connect to building steel and non-energized metallic parts of electrical equipment.

2.1.13.3 Distributed Control System

The DCS provides modulating control, digital control, monitoring, and indicating functions for the plant power block systems.

The following functions will be provided:

- Controlling the CTGs and other systems in a coordinated manner
- Controlling the balance-of-plant systems in response to plant demands
- Monitoring controlled plant equipment and process parameters and delivery of this information to plant operators.
- Monitoring the CTG CEMs units for critical alarms, and collecting data for historical log-in.
- Providing control displays (printed logs, operator interface) for signals generated within the system or received from input/output (I/O)
- Providing consolidated plant process status information through displays presented in a timely and meaningful manner
- Providing alarms for out-of-limit parameters or parameter trends, displaying on operator interface units and recording on an alarm log printer
- Providing storage and retrieval of historical data

The DCS will be a redundant microprocessor-based system and will consist of the following major components:

- Liquid crystal display (LCD) flat screen operator displays
- Engineer work station
- Distributed processing units
- I/O cabinets
- Historical data unit
- Printers
- Data links to the combustion turbine

The DCS will have a functionally-distributed architecture comprising a group of similar redundant processing units linked to a group of operator consoles and the engineer work station by redundant data highways. Each processor will be programmed to perform specific dedicated tasks for control information, data acquisition, annunciation, and historical purposes. By being redundant, no single processor failure can cause or prevent a unit trip.

The DCS will interface with the control systems furnished by the CTG supplier to provide remote control capabilities, as well as data acquisition, annunciation, and historical storage of turbine and generator operating information.

The system will be designed with sufficient redundancy to preclude a single device failure from significantly affecting overall plant control and operation. This also will allow critical control and safety systems to have redundancy of controls, as well as an uninterruptible power source.

2.1.13.4 Cathodic Protection

The cathodic protection system will be designed to control the electrochemical corrosion of designated metal piping buried in the soil. Depending upon the corrosion potential and the site soils, either passive or impressed current cathodic protection will be provided.

2.1.13.5 Freeze Protection

Not required.

2.1.13.6 Service Air

The service air system will supply compressed air to hose connections for general plant use. Service air headers will be routed to hose connections located at various points throughout the facility.

2.1.13.7 Instrument Air

The instrument air system provides dry air to pneumatic operators and devices. An instrument air header will be routed to locations within the facility equipment areas and within the water treatment facility where pneumatic operators and devices will be located.

2.1.14 Interconnect to Electrical Grid

The five CTGs will connect with an approximately 600-foot-long 230 kV transmission line to SCE's Walnut Substation.

2.1.15 Project Construction

Construction of the generating facility, from site preparation and grading to commercial operation, is expected to take place from April 2007 to August 2008. Major milestones are listed in Table 2.1-2.

TABLE 2.1-2
Project Schedule Major Milestones

Activity	Date
Begin Construction	Spring 2007
Startup and Test	Spring 2008
Commercial Operation	August 2008

There will be an average monthly and peak monthly workforce of approximately 220 and 408, respectively, of construction craft people, supervisory, support, and construction management personnel onsite during construction (see Table 8.10-8 in the Socioeconomics section).

Construction will be scheduled to occur between 7 a.m. and 7 p.m., Monday through Saturday. Additional hours may be necessary to make up schedule deficiencies, or to complete critical construction activities. During some construction periods and during the startup phase of the project, some activities will continue 24 hours per day, 7 days per week.

The peak construction site workforce level is expected to last from Month 6 through Month 9 of the construction period.

Table 2.1-3 provides an estimate of the average and peak construction traffic during the 12-month construction period.

TABLE 2.1-3
Average and Peak Construction Traffic

Vehicle Type	Average Daily Trips	Peak Daily Trips
Construction Workers	220	408
Delivery	5	8
Heavy Trucks	5	10
Total	**230**	**426**

Construction laydown and parking areas will be within existing site boundaries and on the SCE easement, north of the plant site. Construction access will be from Bixby Drive, as shown on Figure 2.1-1. Materials and equipment will be delivered by truck.

2.1.16 Generating Facility Operation

WCEP will be operated by two operators per shift, plus two relief operators and one maintenance technician, for a total staff of nine. The facility will be capable of being dispatched throughout the year, but is expected to operate primarily during the utility-defined on-peak and mid-peak periods.

WCEP is designed as a peaking facility to serve load during periods of high demand, which generally occur during daytime hours, and more frequently during the summer than other portions of the year. However, because the LMS100 CTGs are more efficient than any previous peaking generators, and more efficient that any of the aging gas-fired steam generation facilities in Southern California, WCEP will be economical to operate more than is typical for peaking generators, and will operate on the order of approximately a 20 to 40 percent annual capacity factor. The actual capacity factor in any month or year will depend on weather-related customer demand, load growth, hydroelectric supplies, generating unit retirements and replacements, the level of generating unit and transmission outages, and other factors. All of the electricity produced by the plant will be sold under contract or on a merchant basis to the power market. The exact operational profile of the plant will be dependent on weather conditions and the power purchaser's economic dispatch decisions.

Because the capacity will be sold through contract and the prices that will be offered for spot purchases are unknown at this time, the exact mode of operation cannot be described. It is conceivable, however, that the facility could be operated in one or all of the following modes:

- **Summer Design Load**. The facility would be operated at maximum continuous output for as many hours per year as dispatched by the power purchaser. As the facility is designed to be a peaking facility, it is expected to operate only during high ambient temperature periods and/or periods of peak demand.
- **Load Following**. The facility would be available at contractual load but operated at less than maximum available output at high load times of the day. The output of each unit would therefore be adjusted periodically, either by schedule or automatic generation control, to meet whatever load proved profitable to the power purchaser or necessary by CAISO.
- **Partial Shutdown**. Less than all five CTGs would be operating at full load or in load following mode, and the remaining units would be shut down. If the shutdown units are not undergoing maintenance, they will in most cases be available to the power purchaser and the CAISO as non-spinning reserve units. This mode of operation can be expected to occur during average- to low-load hours (off-peak hours, weekends, and shoulder months).
- **Full Shutdown**. This would occur if forced by equipment malfunction, fuel supply interruption, transmission line disconnect, or scheduled maintenance of equipment common to all units. Because WCEP is a peaker, full shutdown for economic reasons would be expected for a majority of the off-peak hours of the year, although non-spinning reserve capability would still be available.

In the unlikely event of a situation that causes a longer-term cessation of operations, security of the facilities will be maintained on a 24-hour basis, and the California Energy

Commission (CEC) will be notified. Depending on the length of shutdown, a contingency plan for the temporary cessation of operations may be implemented. Such contingency plan will be in conformance with all applicable LORS and protection of public health, safety, and the environment. The plan, depending on the expected duration of the shutdown, could include the draining of all chemicals from storage tanks and other equipment and the safe shutdown of all equipment. All wastes will be disposed of according to applicable LORS. If the cessation of operations becomes permanent, the plant will be decommissioned (see Section 4.0, Facility Closure).

2.2 Facility Safety Design

WCEP will be designed to maximize safe operation. Potential hazards that could affect the facility include earthquake, flood, and fire. Facility operators will be trained in safe operation, maintenance, and emergency response procedures to minimize the risk of personal injury and damage to the plant.

2.2.1 Natural Hazards

The principal natural hazard associated with the WCEP site is earthquakes. The site is located in Seismic Risk Zone 4. Structures will be designed to meet the seismic requirements of CCR Title 24 and the latest edition of the California Building Code (CBC). (see Section 8.4, Geologic Hazards and Resources.) This section includes a review of potential geologic hazards, seismic ground motion, and potential for soil liquefaction due to ground-shaking. Potential seismic hazards would be mitigated by implementing the CBC construction guidelines. Appendix 10B, Structural Engineering, includes the structural seismic design criteria for the buildings and equipment.

Flooding is not a hazard of concern. According to the Federal Emergency Management Agency (FEMA), the site is not within either the 100- or 500-year flood plain, and otherwise is within an area of undetermined flood hazard status. Section 8.15, Water Resources, includes additional information on the potential for flooding.

2.2.2 Emergency Systems and Safety Precautions

This section discusses the fire protection systems, emergency medical services, and safety precautions to be used by project personnel. Section 8.10, Socioeconomics, includes additional information on area medical services, and Section 8.16, Worker Safety, includes additional information on safety for workers. Appendices 10A through 10G contain the design practices and codes applicable to safety design for the project. Compliance with these requirements will minimize project effects on public and employee safety.

2.2.2.1 Fire Protection Systems

The project will rely on both onsite fire protection systems and local fire protection services.

2.2.2.1.1 Onsite Fire Protection Systems

The fire protection systems are designed to protect personnel and limit property loss and plant downtime from fire or explosion. The project will have the following fire protection systems.

CO_2 Fire Protection System

This system protects the combustion turbine, generator, and accessory equipment compartments from fire. The system will have fire detection sensors in all compartments. Actuating one sensor will provide a high-temperature alarm on the combustion turbine control panel. Actuating a second sensor will trip the combustion turbine, turn off ventilation, close ventilation openings, and automatically release the CO_2. The CO_2 will be discharged at a design concentration adequate to extinguish the fire.

Transformer Protection

A concrete fire wall is planned for each step-up transformer to limit a potential transformer fire to its concrete basin area.

Fire Hydrants/Hose Stations

This system will supplement the plant fire protection system. Water will be supplied from the plant underground fire water/domestic water system. The project will include a diesel fire pump if the Los Angeles County Fire Department determines this to be necessary.

Fire Extinguisher

The plant Administrative/Maintenance Building, water treatment facility, and other structures will be equipped with portable fire extinguishers as required by the local fire department.

2.2.2.1.2 Local Fire Protection Services

In the event of a major fire, the plant personnel will be able to call upon the local Fire Department for assistance. The Hazardous Materials Risk Management Plan (see Section 8.5, Hazardous Materials Handling) for the plant will include all information necessary to permit all fire-fighting and other emergency response agencies to plan and implement safe responses to fires, spills, and other emergencies.

2.2.2.2 Personnel Safety Program

WCEP will operate in compliance with federal and state occupational safety and health program requirements. Compliance with these programs will minimize project effects on employee safety. These programs are described in Section 8.16, Worker Safety.

2.3 Facility Reliability

This section discusses the expected facility availability, equipment redundancy, fuel availability, water availability, and project quality control measures.

2.3.1 Facility Availability

Because of WCEP's predicted high efficiency relative to other units traditionally used for peaking service, it is anticipated that the facility will normally be called upon to operate at annual capacity factors of approximately 20 to 40 percent. The facility will be designed to operate between 50 and 100 percent of base load to support dispatch service and automatic generation control in response to customer demands for electricity.

WCEP will be designed for an operating life of 30 years. Reliability and availability projections are based on this operating life. Operation and maintenance procedures will be

consistent with industry standard practices to maintain the useful life status of plant components.

The percent of time that the power plant is projected to be operated is defined as the "service factor." The service factor considers the amount of time that a unit is operating and generating power, whether at full or partial load. CAISO market data available to the public is not sufficient to predict a difference between capacity factor and service factor. The service factor, which considers the projected percent of time of operation, differs from the equivalent availability factor (EAF), which considers the projected percent of energy production capacity achievable.

The EAF may be defined as a weighted average of the percent of full energy production capacity achievable. The projected EAF for WCEP is estimated to be approximately 92 to 98 percent.

The EAF, which is a weighted average of the percent of energy production capacity achievable, differs from the "availability of a unit," which is the percent of time that a unit is available for operation, whether at full load, partial load, or standby.

2.3.2 Redundancy of Critical Components

The following sections identify equipment redundancy as it applies to project availability. A summary of equipment redundancy is shown in Table 2.3-1.

TABLE 2.3-1
Major Equipment Redundancy

Description	Number	Note
CTGs	Five trains	
Circulating water pumps	Two, 50 percent capacity	
Cooling tower	One, multi-cell tower	Cooling tower is multi-cell mechanical draft design
Demineralizer—RO Systems	Two, 60 percent trains	Rental ion exchange units, offsite regeneration.
Natural Gas Compressors	Three, 50 percent capacity	

2.3.2.1 Simple-cycle Power Block

Five separate combustion turbine power generation trains will operate in parallel within the simple-cycle power block. Each CTG will provide approximately 20 percent of the total power block output. The major components of the simple-cycle power block consist of the following subsystems.

2.3.2.1.1 Combustion Turbine Generator Subsystems

The combustion turbine subsystems include the combustion turbine, inlet air filtration and evaporative inlet cooling system, generator and excitation systems, and turbine control and instrumentation. The combustion turbine is comprised of a compressor section, a combustion section, and a turbine section. Air compressed in the compressor section of the

combustion turbine is heated by the combustion of natural gas in the combustion section, and then allowed to expand in the turbine section, where the expansion turns the rotor to produce mechanical energy to drive the compressor and generator. Exhaust gas from the combustion turbine will be directed into an SCR to control NO_x emissions and an oxidation catalyst to control CO emissions. The generator will be air cooled. The generator excitation system will be a solid-state static system. Combustion turbine control and instrumentation (interfaced with the DCS) will cover the turbine governing system, and the protective system.

2.3.2.2 Distributed Control System

The DCS will be a redundant microprocessor-based system that will provide the following functions:

- Control the CTG, and other systems in response to unit load demands (coordinated control)
- Provide control room operator interface
- Monitor plant equipment and process parameters and provide this information to the plant operators in a meaningful format
- Provide visual and audible alarms for abnormal events based on field signals or software-generated signals from plant systems, processes, or equipment

The DCS will have functionally-distributed architecture comprising a group of similar redundant processing units linked to a group of operator consoles and an engineer workstation by redundant data highways. Each processor will be programmed to perform specific dedicated tasks for control information, data acquisition, annunciation, and historical purposes.

Plant operation will be controlled from the operator panel located in the control room. The operator panel will consist of two individual cathode ray tube (CRT)/keyboard consoles and one engineering workstation. Each CRT/keyboard console will be an independent electronic package so that failure of a single package does not disable more than one CRT/keyboard. The engineering workstation will allow the control system operator interface to be revised by authorized personnel.

2.3.2.3 Demineralized Water System

Makeup to the demineralized water system will be from the reclaimed water storage tank. The demineralized water system will consist of two 60 percent capacity makeup RO and mixed-bed demineralizer trains. Demineralized water will be stored in one 100,000-gallon demineralized water storage tank.

2.3.2.4 Water Injection Makeup and Storage

The water injection makeup and storage subsystem will provide demineralized water storage and pumping capabilities to supply high-purity water for water injection. Major components of the system are the demineralized water storage tank, providing approximately a four-hour supply of demineralized water at peak load and two full-capacity, horizontal, centrifugal, cycle makeup water pumps.

2.3.2.5 Circulating Water System

The circulating water system will provide cooling water to three closed-cooling water heat exchangers, rated at 33 percent capacity each. Three closed-cooling water heat exchangers will supply water to cool the combustion turbine intercooler and lube oil systems. There will be two 50-percent-capacity circulating water pumps supplying water to the closed cooling water heat exchangers.

2.3.2.6 Compressed Air

The compressed air system comprises the instrument air and service air subsystems. The service air system supplies compressed air to the instrument air dryers and to hose connections for general plant use. The service air system will include three 50 percent capacity air motor-driven compressors, service air headers, distribution piping, and hose connections. The instrument air system supplies dry compressed air at the required pressure and capacity for all control air demands, including pneumatic controls, transmitters, instruments, and valve operators. The instrument air system will include two 100 percent capacity air dryers with prefilters and after filters, an air receiver, instrument air headers, and distribution piping.

2.3.3 Fuel Availability

Fuel for the facility will be supplied by SoCalGas. The project will connect with an existing 30-inch natural gas pipeline owned by SoCalGas adjacent to the site. There is sufficient capacity in the transmission gas line to supply WCEP. See Section 6.0, Natural Gas Supply, for a more detailed description.

2.3.4 Water Availability

Reclaimed water for WCEP will be provided by the Rowland Water District. Potable water will also be supplied by the Rowland Water District. The availability of water to meet the needs of WCEP is discussed in more detail in Section 7.0, Water Supply.

2.3.5 Project Quality Control

The Quality Control Program that will be applied to WCEP is summarized in this section. The objective of the Quality Control Program is to ensure that all systems and components have the appropriate quality measures applied during all project phases, including design, procurement, fabrication, construction, or operation. The goal of the Quality Control Program is to achieve the desired levels of safety, reliability, availability, operability, constructability, and maintainability for the generation of electricity.

The required quality assurance for a system is obtained by applying controls to various activities, according to the activity being performed. For example, the appropriate controls for design work are checking and review, and the appropriate controls for manufacturing and construction are inspection and testing. Appropriate controls will be applied to each of the various activities for the project.

2.3.5.1 Project Stages

For quality assurance planning purposes, the project activities have been divided into the following eight stages that apply to specific periods of time during the project.

1. **Conceptual Design Criteria**—Define the requirements and engineering analyses.
2. **Detail Design**—Prepare calculations, drawings, and lists needed to describe, illustrate, or define systems, structures, or components.
3. **Procurement Specification Preparation**—Compile and document the contractual, technical and quality provisions for procurement specifications for plant systems, components, or services.
4. **Manufacturer's Control and Surveillance**—Ensure that the manufacturers conform to the provisions of the procurement specifications.
5. **Manufacturer Data Review**—Review manufacturers' drawings, data, instructions, procedures, plans, and other documents to ensure coordination of plant systems and components, and conformance to procurement specifications.
6. **Receipt Inspection**—Inspect and review of product at the time of delivery to the construction site.
7. **Construction/Installation**—Inspect and review of storage, installation, cleaning, and initial testing of systems or components at the facility.
8. **System/Component Testing**—Controlled operation of generating facility components in a system to ensure that the performance of systems and components conform to specified requirements.

The design, procurement, fabrication, erection, and checkout of each generating facility system will progress through the eight stages defined above.

2.3.5.2 Quality Control Records

The following quality control records will be maintained:

- Project instructions manual
- Design calculations
- Project design manual
- Quality assurance audit reports
- Conformance to construction records drawings
- Procurement specifications (contract issue and change orders)
- Purchase orders and change orders
- Project correspondence

For procured component purchase orders, a list of qualified suppliers and subcontractors will be developed. Before contracts are awarded, the subcontractors' capabilities will be evaluated. The evaluation will consider suppliers' and subcontractors' personnel, production capability, past performance, financial strength, and quality assurance program.

During construction, field activities are accomplished during the last four stages of the project: receipt inspection, construction/installation, system/component testing, and plant operations. The construction contractor will be contractually responsible for performing the work in accordance with the quality requirements specified by contract.

The subcontractors' quality compliance will be surveyed through inspections, audits, and administration of independent testing contracts.

A plant operation and maintenance program, typical of a project this size, will be implemented by WCEP to control operation and maintenance quality. A specific program for this project will be defined and implemented during initial plant startup.

2.4 Laws, Ordinances, Regulations, and Standards

The applicable LORS for each engineering discipline are included as part of Appendices 10A through 10G.