California ISO
Your Link to Power

California Independent System Operator

Gary DeShazo
Director of Regional Transmission – North
(916) 608-5880

November 7, 2006

Mr. Mark O'Leary
Senior Project Manager
PG&E, Generation Interconnection Services
245 Market Street, Room 772b
San Francisco, CA 94105

Subject: Calpeak Power Panoche Project - Final Interconnection Approval

Dear Mr. O'Leary:

The California ISO (CAISO) has reviewed the revised Facilities Study Report (FS) for the Calpeak Power Panoche Power Plant Project located in the City of Firebaugh, California. The SIS was conducted by the Pacific Gas and Electric Company (PG&E) at the request of the Calpeak Power, LLC/Pratt & Whitney Power Systems Company to construct a new power plant and to connect it to the 115 kV bus of the PG&E Panoche Substation by a short tie line. The project consists of two combustion turbine generators (CT) rated at 60.94 MW each, with a plant auxiliary load of 1.99 MW, for a maximum net output to the grid of 119.9 MW. The project's requested commercial operational date (COD) is January 2009. The study revision was required due to the change in the Project's operational date and increase in its output.

The Direct Assignment facilities work scope consists of:

- Providing transmission interconnection from the Project to the Point of Interconnection including tapping the Peaker generator tie line
- Providing a pre-parallel inspection, testing, SCADA, EMS setup, engineering support, etc.

The Network Upgrade facilities work scope consists of:

- Reconductoring the Peaker generator tie line
- Reconductoring the Le Grand-Dairyland 115 kV Line
- Upgrading relays in Panoche Substation
- Providing special protection schemes (SPS)

Based on the results of the FS, the CAISO is granting final interconnection approval to the Calpeak Power Panoche Power Plant Project.

Please note that this letter approving the interconnection of the project allows the project to connect to the CAISO Controlled Grid and to be eligible to deliver the project's output using available transmission. However, it does not establish the generation project's level of deliverability for purposes of determining its Net Qualifying Capacity under the CAISO Tariff and in accordance with CPUC-adopted Resource Adequacy Rules. Therefore, this letter makes no representation, and Calpeak cannot rely on any statements herein, regarding the ability, or amount, of the output of the project to be eligible to sell Resource Adequacy Capacity. We encourage you to follow the baseline deliverability studies ongoing at the CAISO. For more information on generation deliverability, please reference the web links provided in the attachment to this letter.

If you have questions about the CAISO review of this study, please contact Larry Tobias at (916) 608-5763 (LTobias@caiso.com) or myself at (916) 608-5880 (GDeShazo@caiso.com)

Sincerely,

Gary L DeShazo

Gary DeShazo
Director of Regional Transmission – North

cc: JJ Fair via e-mail mailto:jj.fair@calpeak.com)

Mark Esguerra (PG&E via e-mail, mailto: PME8@pge.com)
Art McAuley (PG&E via e-mail, mailto: AKM3@pge.com)
Mark O'Leary (PG&E via e-mail, mailto: MEO5@pge.com)
Albert Wong (PG&E via e-mail, mailto: AYW1@pge.com)

Armando Perez (ISO)
Dariush Shirmohammadi (ISO)
Donna Jordan (ISO via e-mail)
Judy Nickel (ISO via e-mail)
Dennis Peters (ISO via e-mail)
Tom French (ISO via e-mail)
Regional Transmission - North (ISO via e-mail)

Attachment

The attachment provides a summary of the project.

Project Overview:

The Project consists of two gas turbine generators each rated for 60.94 MW or a combined total of 121.88 MW with a plant auxiliary load of 1.99 MW. The maximum net output to the grid will be 119.89 MW. The two generators are connected to a three-winding step-up transformer. The Project will tap onto the existing 115 kV Peaker generator tie line at the Peaker site. The project's requested commercial operational date (COD) is January 2009.

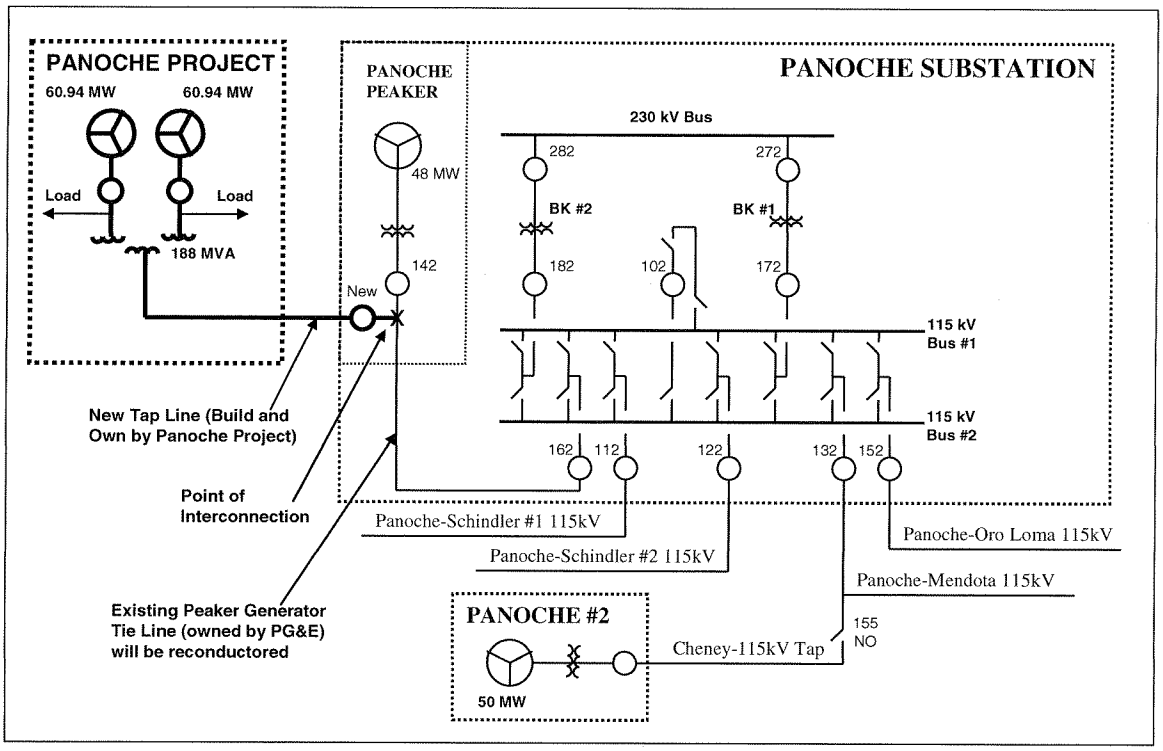

A conceptual one-line diagram of the Project is shown above.

Summary of the Facilities Study (FS) Report

The SIS issued on March 30, 2006 concluded that the Project would:

1. Cause one new Category "A" normal, one new Category "B" emergency, and two new Category "C" emergency overloads on PG&E's transmission facilities that require mitigation by the Project. The overloaded facilities are:

   a. The Le Grand – Dairyland 115 kV Line (Normal and Category "B")

   b. The Coalinga No. 1 – Coalinga No. 2 70 kV Line between the Tornado Jct. and Coalinga 1 section (Category "C")

   c. The Wilson – Oro Loma 115 kV Line between the Oro Loma and El Nido section (Category "C")

2. Exacerbate two normal, three Category "B" emergency, and eleven Category "C" emergency pre-project overloads. Several projects with superior queue positions and earlier commercial operation dates are responsible for mitigating these overloads. Should those projects not materialize, Midway may be responsible for mitigating these overloads.

3. Require a fully redundant, double-pilot current differential scheme utilizing dual fiber optic communications for the Project's generator tie line.

4. Have no adverse impact on the transmission system's transient stability performance by the Project following the selected contingencies.

5. Exacerbate three pre-project overstressed breakers. However, a project with a superior queue position and an earlier online date is responsible for replacing these three breakers. Should this project not materialize, Midway may be responsible for replacing these breakers.

Based on the SIS, the transmission line evaluation in the FS included the following:

Direct Assignment Work Scope

The Transmission Line Evaluation determined the Direct Assignment facilities work scope for which the Project will be responsible. These include all transmission line engineering, design, and construction activities from the Project up to the Point of Interconnection. The final Direct Assignment facilities work scope will be determined after detailed design and engineering is completed. The work scope includes:

- Provide a tap interconnection at the Peaker generator tie line
- Rearrange or rebuild the Panoche-Shindler 115 kV No. 1 and 2 lines to accommodate crossing of the new tap line

Network Upgrade Work Scope

The Transmission Line Evaluation determined the Network Upgrade facilities work scope for which the Project will be responsible. These include all transmission line engineering, design, and construction activities beyond the Point of Interconnection. The final Network Upgrades facilities work scope will be determined after detailed design and engineering is completed. The work scope includes:

- Re-conductor the Peaker generator tie line between CB 142 at the Peaker and CB 162 at Panoche Substation with 477 kcmil ACSS conductor
- Re-conductor the Le Grand – Dairyland 115 kV Line

Based on the SIS, the substation evaluation in the FS included the following:

Direct Assignment Work Scope

The Substation Evaluation determined the Direct Assignment facilities work scope for which the Project will be responsible. These include all substation engineering, design, and construction activities from the Project facility up to the Point of Interconnection. The final Network Upgrades facilities work scope will be

determined after detailed design and engineering is completed. The work scope includes:

- Modify the existing fully redundant double-pilot current differential protection scheme to a fully redundant, 3 Terminal, double-pilot current differential scheme utilizing dual fiber optic communications utilizing dual fiber optic communications
- Perform a pre-parallel inspection, testing, SCADA, EMS setup, engineering support, etc.

Network Upgrade Work Scope

The Substation Evaluation determined the Network Upgrade facilities work scope for which the Project will be responsible. These include all substation engineering, design, and construction activities beyond the Point of Interconnection. The final Network Upgrades facilities work scope will be determined after detailed design and engineering is completed. The work scope includes:

- Upgrade substation equipment (protection relays, CTs, panels, conduits, etc) when required
- Provide telecommunication requirements
- Provide SPS to mitigate the overload of the Coalinga No.1-Coalinga No.2 70 kV Line
- Provide SPS to mitigate the overload of the Wilson-Oro Loma 115 kV Line