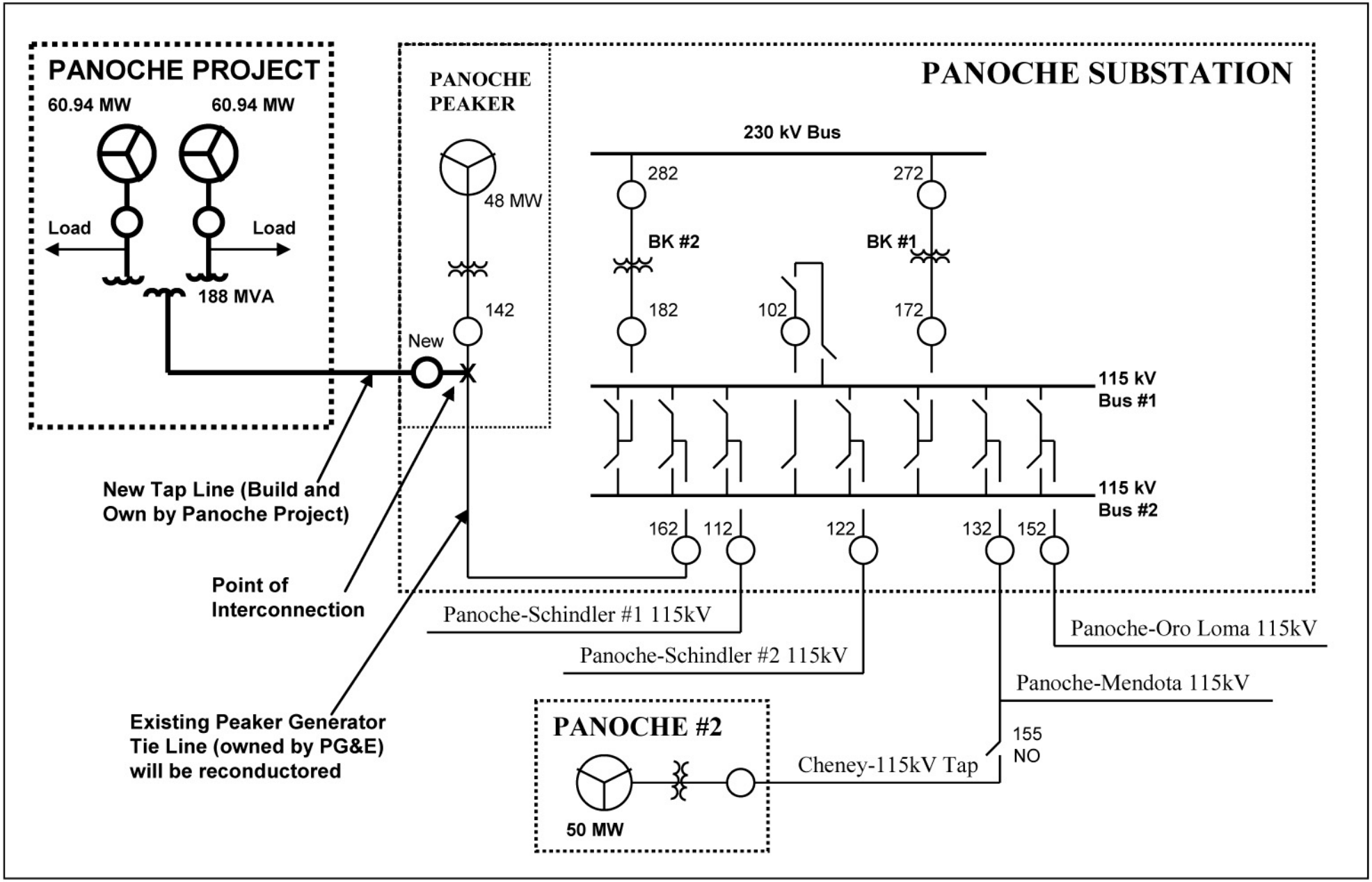

STARWOOD POWER - MIDWAY, LLC PEAKING PROJECT	Figure 3.6-1 CONCEPTUAL INTERCONNECTION ONE LINE DIAGRAM	2006