ATTACHMENT VPM-76

/ Marley NC® Class Cooling Tower /

Engineering Data

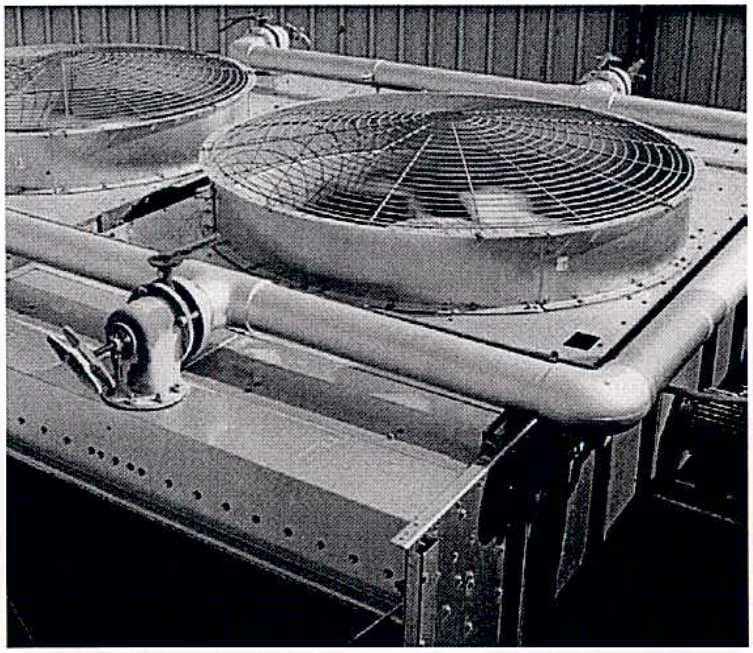

SPX Cooling Technologies

Balcke | Hamon Dry Cooling | Marley

The NC Class—Quiet by Design

The NC Class is the result of extensive design studies focused on cooling tower sound control. These studies were complicated by the fact that the cooling tower market is typically driven by one of two powerful, yet often conflicting requirements. The most common is for a cooling tower that provides the required heat rejection capacity with a high level of reliability at low cost. Sound control, while important, is not the primary consideration for this application.

The other requirement, which is becoming ever more important in our crowded, fast-paced society, is driven by conditions that demand the lowest practical sound level. Energy efficiency, reliability, ease of maintenance and reasonable cost, while still extremely important, are not the highest priorities

In the first case, sound is important, while in the second case it is **extremely important**. To best satisfy these two competing market requirements we created a multi-tiered approach, through key mechanical equipment selections, to sound control. The result is more options than any other cooling tower on the market today.

All NC Class cooling towers are designed for low sound levels using high blade-count, wide-chord fans for maximum efficiency at low tip speeds. NC Class models with the **"L"** suffix in the model number are the special **low sound editions.** To achieve the very lowest possible sound levels while maintaining efficiency, the best available combination of motor, gear ratio, fan blade count and blade profile were carefully selected for every **"L"** model. If low sound levels are critical to your project, the slight additional cost of the **"L"** models provides the best value.

The result is a line of towers capable of meeting all but the most restrictive noise limitations—and that will react favorably to natural attenuation. Where the tower has been sized to operate within an enclosure, the enclosure itself will have a damping effect on sound. Sound also declines with distance—by about 5 dBA each time the distance doubles.

Where noise at a critical point is likely to exceed an acceptable limit, several other options are available—listed below in ascending order of cost impact:

- For more severe cases requiring the lowest possible fan sound levels the Marley "Ultra low-noise" fan option is now available on a limited number NC Class models. Tower height will increase slightly—obtain current sales drawings from your Marley sales representative for accurate dimensions.
- A Marley Variable Speed Drive automatically minimize the tower's noise level during periods of reduced load and/or reduced ambient temperature without sacrificing the system's ability to maintain a constant cold water temperature. This is a relatively inexpensive solution, and can pay for itself quickly in reduced energy costs.

  In many cases, noise concerns are limited to nighttime, when ambient noise levels are lower and neighbors are trying to sleep. You can usually resolve these situations by using two-speed motors—operating the fans at reduced speed without cycling "after hours". The natural nighttime reduction in wet-bulb temperature makes this a very feasible solution in most areas of the world, but the need to avoid cycling may cause the cold water temperature to vary significantly.
- The most extreme cases may require inlet and discharge sound attenuator sections—however, the static pressure loss imposed by discharge attenuators may necessitate an increase in tower size. Two stages of inlet or discharge attenuators supported by the tower and designed and tested for the most stringent requirements are available as an option. See page 28.

The advantage is yours. You now have the choices you need to balance your project's performance, space and cost requirements with your sound level needs for a win-win solution to your cooling system design.

Enclosures

Occasionally, cooling towers are located inside architectural enclosures for aesthetic reasons. Although NC Class towers adapt well to enclosures, the designer must realize the potential impact of a poorly arranged enclosure on the tower's performance and operation. The designer must take care to provide generous air inlet paths, and the tower's fan cylinder discharge height should not be lower than the elevation of the top of the enclosure. *Marley Technical Report #H-004* **"External Influences on Cooling Tower Performance"** is available at **spxcooling.com** or from your Marley sales representative.

As suggested in the aforementioned *Technical Report,* it may also be advisable to specify a design wet-bulb temperature 1°F higher than normal to compensate for potential recirculation initiated by the enclosure. You'll benefit from discussing your project with your Marley sales representative.

Marley "Ultra low-noise" fan

System Cleanliness

Cooling towers are very effective air washers. Atmospheric dust able to pass through the relatively small louver openings will enter the circulating water system. Increased concentrations can intensify system maintenance by clogging screens and strainers—and smaller particulates can coat system heat transfer surfaces. In areas of low flow velocity—such as the cold water basin—sedimentary deposits can provide a breeding ground for bacteria.

In areas prone to dust and sedimentation, you should consider installing some means for keeping the cold water basin clean. Typical devices include side stream filters and a variety of filtration media.

Water Treatment

To control the buildup of dissolved solids resulting from water evaporation, as well as airborne impurities and biological contaminants including Legionella, an effective consistent water treatment program is required. Simple blowdown may be adequate to control corrosion and scale, but biological contamination can only be controlled with biocides.

An acceptable water treatment program must be compatible with the variety of materials incorporated in a cooling tower—ideally the pH of the circulating water should fall between 6.5 and 8.0. Batch feeding of chemicals directly into the cooling tower is not a good practice since localized damage to the tower is possible. Specific startup instructions and additional water quality recommendations can be found in the NC Class User Manual which accompanies the tower and also is available from your local Marley sales representative. For complete water treatment recommendations, consult a competent, qualified water treatment supplier.

Most systems can be successfully treated with a ***MARLEY***OZONE™ System. This effective biocide usually removes the requirement for other chemical feed systems. In many installations there is the potential for significant water savings. For complete information, contact your local Marley sales representative.

⚠ CAUTION

The cooling tower must be located at such distance and direction to avoid the possibility of contaminated discharge air being drawn into building fresh air intake ducts. The purchaser should obtain the services of a Licensed professional Engineer or Registered Architect to certify that the location of the fluid cooler is in compliance with applicable air pollution, fire and clean air codes.

Typical Applications

The NC Class tower is an excellent choice for normal applications requiring cold water for the dissipation of heat. This includes condenser water cooling for air conditioning, refrigeration, and thermal storage systems, as well as their utilization for free-cooling in all of those systems. The NC Class can also be used in the cooling of jacket water for engines and air compressors, and are widely applied to dissipate waste heat in a variety of industrial and manufacturing processes.

Choosing the all stainless steel construction option, the NC Class can be confidently applied in unusually corrosive processes and operating environments. However, no single product line can answer all problems, and selective judgement should be exercised in the following situations

Applications Requiring Alternative Cooling Tower Selections

Certain types of applications are incompatible with any cooling tower with PVC film fill—whether NC Class or a competitive tower of similar manufacture. PVC is subject to distortion in high water temperatures, and the narrow passages typical of film-type fill are easily clogged by turbid or debris-laden water. Some of the applications, which call for alternative tower designs are:

- Water temperatures exceeding 125°F—adversely affects the service life and performance of normal PVC fill.
- Ethylene glycol content—can plug fill passages as slime and algae accumulate to feed on the available organic materials.
- Fatty acid content—found in processes such as soap and detergent manufacturing and some food processing—fatty acids pose a serious threat for plugging fill passages.
- Particulate carry over—often found in steel mills and cement plants—can both cause fill plugging, and can build up to potentially damaging levels on tower structure.
- Pulp carry over—typical of the paper industry and food processing where vacuum pumps or barometric condensers are used. Causes fill plugging which may be intensified by algae.

Alternative Selections

In addition to the NC Class, SPX Cooling Technologies offers a full scope of products in various designs and capacities to meet the special demands of specific applications.

www.spxcooling.com—visit us on the web for a complete list of products, services, publications and to find your nearest sales representative.

NC8301 NC8302 NC8303

Use this data for preliminary layouts only. Obtain current drawing from your Marley sales representative.

The Marley UPDATE web-based selection software —available at www.spxcooling.com—provides NC Class model recommendations based on customer's specific design requirements.

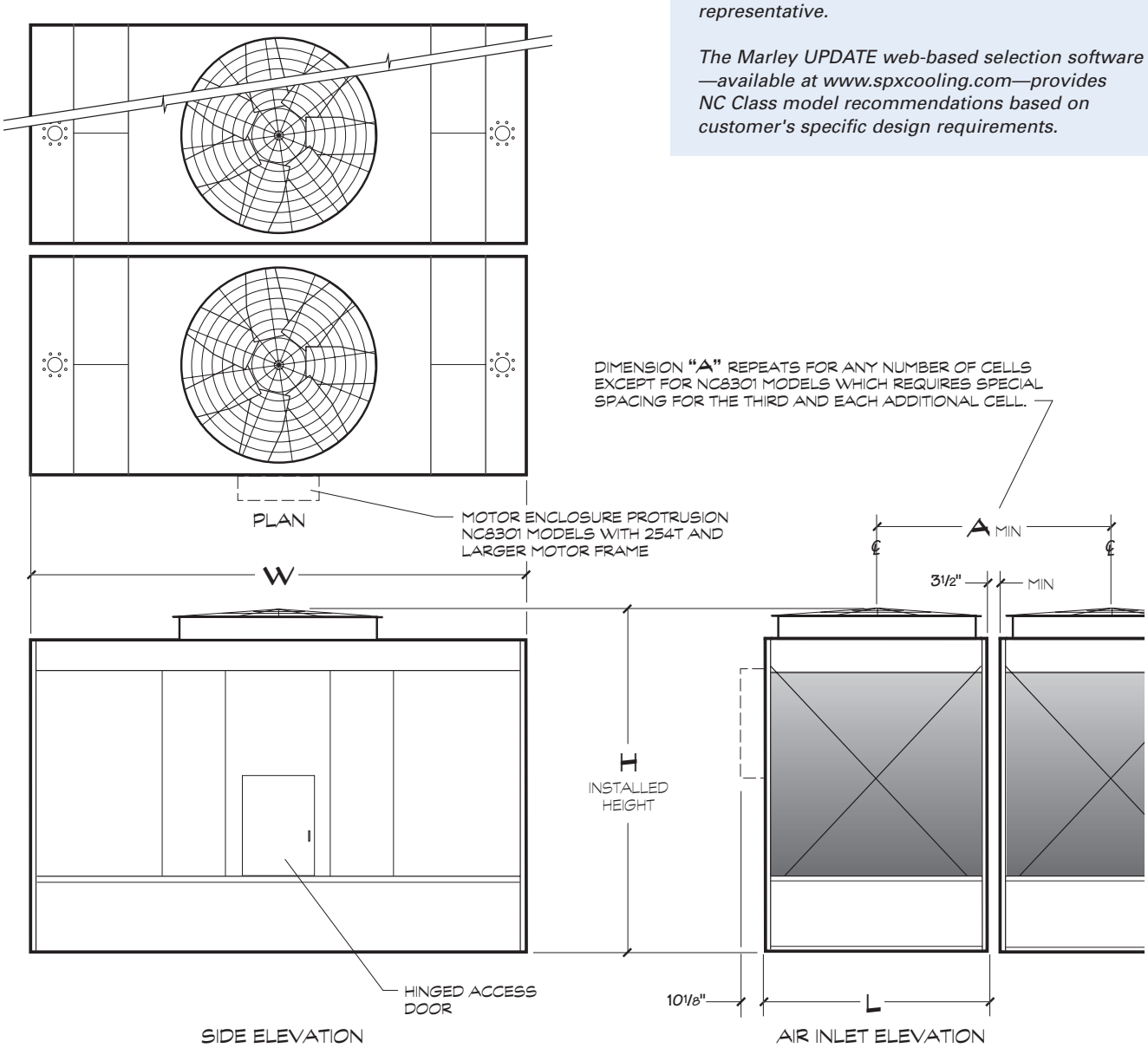

NC8301 NC8302 NC8303

Model note 2	Nominal Tons note 3	Motor hp	dBA 5'-0" from air inlet face	Design Operating Weight lb	Shipping Weight lb	Dimensions			
						L	W	H	A
NC8301AL-1	94	2	63	9116	4528	6'-5"	14'-0"	10'-2"	6'-8"
NC8301BL-1	109	3	67						
NC8301C-1	133	5	75						
NC8301CL-1	132	5	69						
NC8301D-1	147	7.5	77						
NC8301DL-1	150	7.5	73						
NC8301E-1	164	10	78						
NC8301EL-1	167	10	74						
NC8301F-1	180	15	79						
NC8302AL-1	118	2	64	11256	4999	7'-11"	15'-6"	10'-2"	8'-2"
NC8302BL-1	136	3	65						
NC8302CL-1	159	5	68						
NC8302D-1	184	7.5	74						
NC8302DL-1	184	7.5	72						
NC8302E-1	204	10	76						
NC8302EL-1	203	10	74						
NC8302F-1	231	15	79						
NC8302FL-1	229	15	76						
NC8302G-1	242	20	80						
NC8303BL-1	154	3	65	12022	5765	7'-11"	15'-6"	11'-11"	8'-2"
NC8303CL-1	180	5	68						
NC83803DL-1	204	7.5	72						
NC8303E-1	229	10	76						
NC8303EL-1	228	10	74						
NC8303F-1	259	15	79						
NC8303FL-1	259	15	76						
NC8303G-1	284	20	80						
NC8303H-1	297	25	81						

NOTE

1 **Use this bulletin for preliminary layouts only.** Obtain current drawings from your Marley sales representative. All table data is per cell.

2 Last numeral of model number indicates number of cells. Change as appropriate for your selection.

3 Nominal tons are based upon 95°F HW, 85°F CW, 78°F WB and 3 GPM/ton. The Marley ***UPDATE*** web-based selection software provides NC Class model recommendations based on specific design requirements.

4 Standard overflow is a 4" dia. standpipe in the collection basin floor. The standpipe removes for flush-out and draining. See page 22 for side overflow option.

5 Outlet sizes vary according to GPM and arrangement. See pages 22 and 23 for outlet sizes and details.

6 Makeup water connection may be 1" or 2" dia., depending upon tower heat load, water pressure, and desired connections. See page 17 for additional information.

NC8304 NC8305

Use this data for preliminary layouts only. Obtain current drawing from your Marley sales representative.

The Marley UPDATE web-based selection software —available at www.spxcooling.com—provides NC Class model recommendations based on customer's specific design requirements.

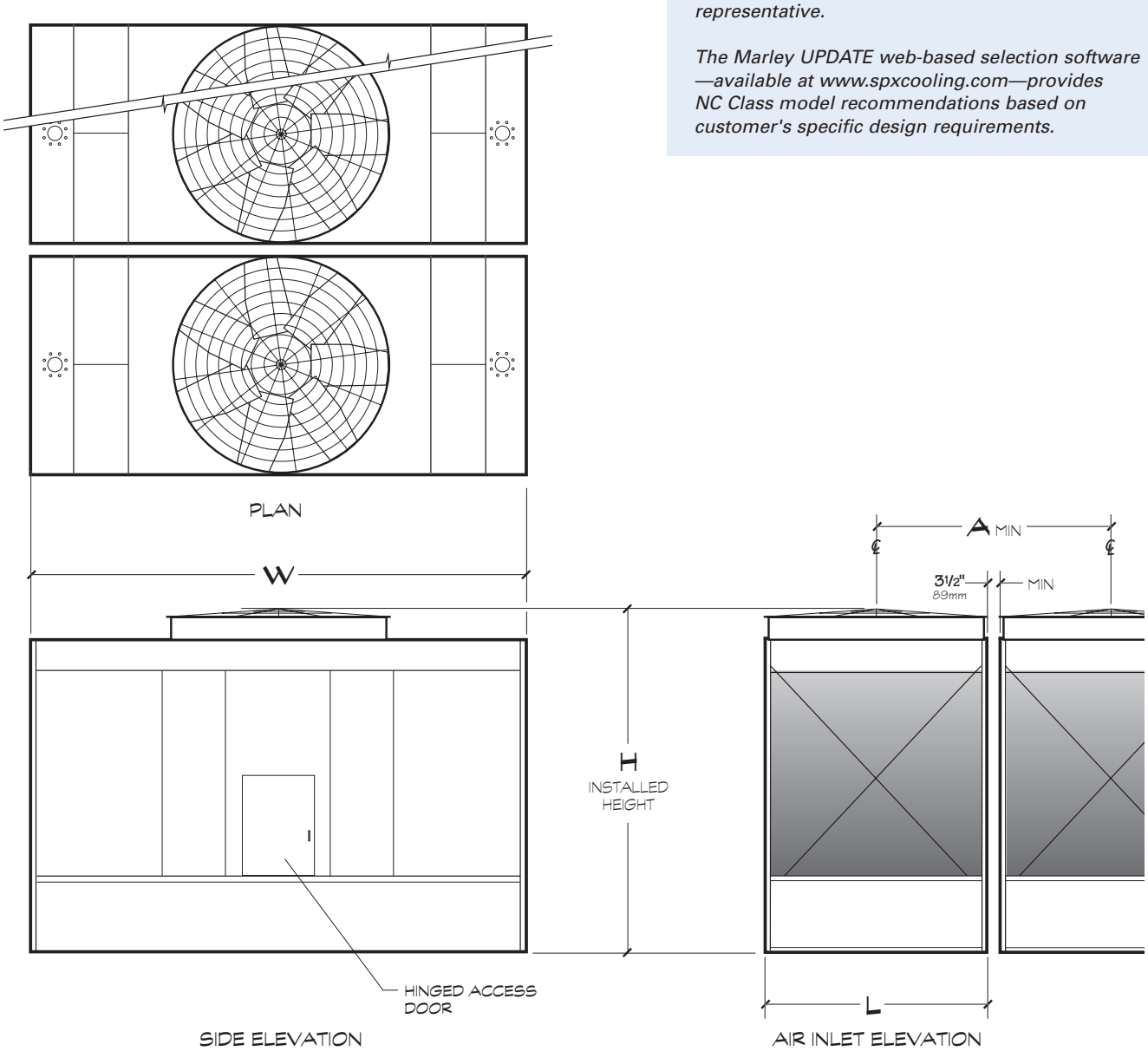

NC8304 NC8305

Model note 2	Nominal Tons note 3	Motor hp	dBA 5'-0" from air inlet face	Design Operating Weight lb	Shipping Weight lb	Dimensions			
						L	W	H	A
NC8304BL-1	217	5	65	14699	7024	8'-11"	17'-0"	13'-0"	9'-2"
NC8304CL-1	247	7.5	66						
NC8304D-1	270	10	72						
NC8304DL-1	271	10	68						
NC8304E-1	310	15	76						
NC8304EL-1	311	15	72						
NC8304F-1	339	20	77						
NC8304FL-1	339	20	73						
NC8304G-1	362	25	82						
NC8304GL-1	363	25	76						
NC8304H-1	370	30	83						
NC8304HL-1	372	30	77						
NC8305CL-1	281	7.5	66	19486	9191	10'-11"	18'-9"	13'-0"	11'-2"
NC8305D-1	316	10	72						
NC8305DL-1	312	10	68						
NC8305E-1	363	15	76						
NC8305EL-1	366	15	72						
NC8305F-1	403	20	77						
NC8305FL-1	393	20	73						
NC8305G-1	431	25	82						
NC8305GL-1	431	25	76						
NC8305H-1	453	30	83						
NC8305HL-1	450	30	77						
NC8305J-1	501	40	86						
NC8305JL-1	483	40	80						
NC8305K-1	520	50	87						

NOTE

1 **Use this bulletin for preliminary layouts only.** Obtain current drawings from your Marley sales representative. All table data is per cell.
2 Last numeral of model number indicates number of cells. Change as appropriate for your selection.
3 Nominal tons are based upon 95°F HW, 85°F CW, 78°F WB and 3 GPM/ton. The Marley ***UPDATE*** web-based selection software provides NC Class model recommendations based on specific design requirements.
4 Standard overflow is a 4" dia. standpipe in the collection basin floor. The standpipe removes for flush-out and draining. See page 22 for side overflow option.
5 Outlet sizes vary according to GPM and arrangement. See pages 22 and 23 for outlet sizes and details.
6 Makeup water connection may be 1" or 2" dia., depending upon tower heat load, water pressure, and desired connections. See page 17 for additional information.

NC8306 NC8307

Use this data for preliminary layouts only. Obtain current drawing from your Marley sales representative.

The Marley UPDATE web-based selection software —available at www.spxcooling.com—provides NC Class model recommendations based on customer's specific design requirements.

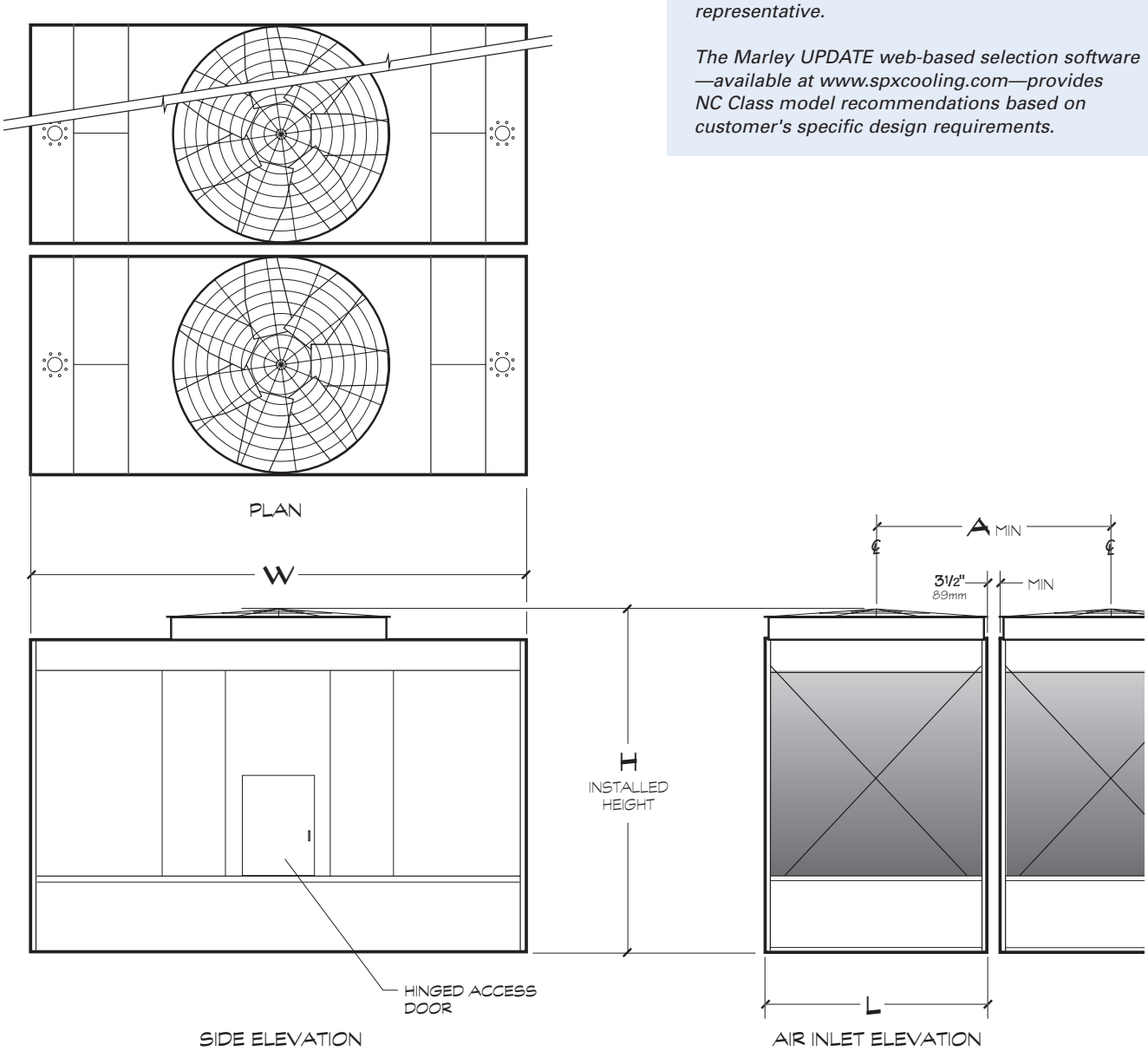

NC8306 NC8307

Model note 2	Nominal Tons note 3	Motor hp	dBA 5'-0" from air inlet face	Design Operating Weight lb	Shipping Weight lb	Dimensions			
						L	W	H	A
NC8306DL-1	350	10	67	22969	11156	11'-11"	19'-10"	13'-0"	12'-2"
NC8306EL-1	405	15	71						
NC8306F-1	441	20	74						
NC8306FL-1	444	20	72						
NC8306G-1	474	25	77						
NC8306GL-1	475	25	74						
NC8306H-1	503	30	79						
NC8306HL-1	502	30	77						
NC8306J-1	557	40	81						
NC8306JL-1	556	40	78						
NC8306K-1	582	50	82						
NC8307CL-1	343	7.5	66	27256	12198	11'-11"	22'-5"	13'-4"	12'-2"
NC8307DL-1	378	10	67						
NC8307E-1	420	15	73						
NC8307EL-1	423	15	69						
NC8307F-1	469	20	76						
NC8307FL-1	468	20	72						
NC8307G-1	502	25	77						
NC8307GL-1	501	25	74						
NC8307H-1	532	30	79						
NC8307HL-1	528	30	77						
NC8307J-1	582	40	82						
NC8307JL-1	579	40	78						
NC8307K-1	622	50	83						
NC8307M-1	651	60	83						

NOTE

1 **Use this bulletin for preliminary layouts only.** Obtain current drawings from your Marley sales representative. All table data is per cell.
2 Last numeral of model number indicates number of cells. Change as appropriate for your selection.
3 Nominal tons are based upon 95°F HW, 85°F CW, 78°F WB and 3 GPM/ton. The Marley ***UPDATE*** web-based selection software provides NC Class model recommendations based on specific design requirements.
4 Standard overflow is a 4" dia. standpipe in the collection basin floor. The standpipe removes for flush-out and draining. See page 22 for side overflow option.
5 Outlet sizes vary according to GPM and arrangement. See pages 22 and 23 for outlet sizes and details.
6 Makeup water connection may be 1" or 2" dia., depending upon tower heat load, water pressure, and desired connections. See page 17 for additional information.

NC8309

Use this data for preliminary layouts only. Obtain current drawing from your Marley sales representative.

The Marley UPDATE web-based selection software —available at www.spxcooling.com—provides NC Class model recommendations based on customer's specific design requirements.

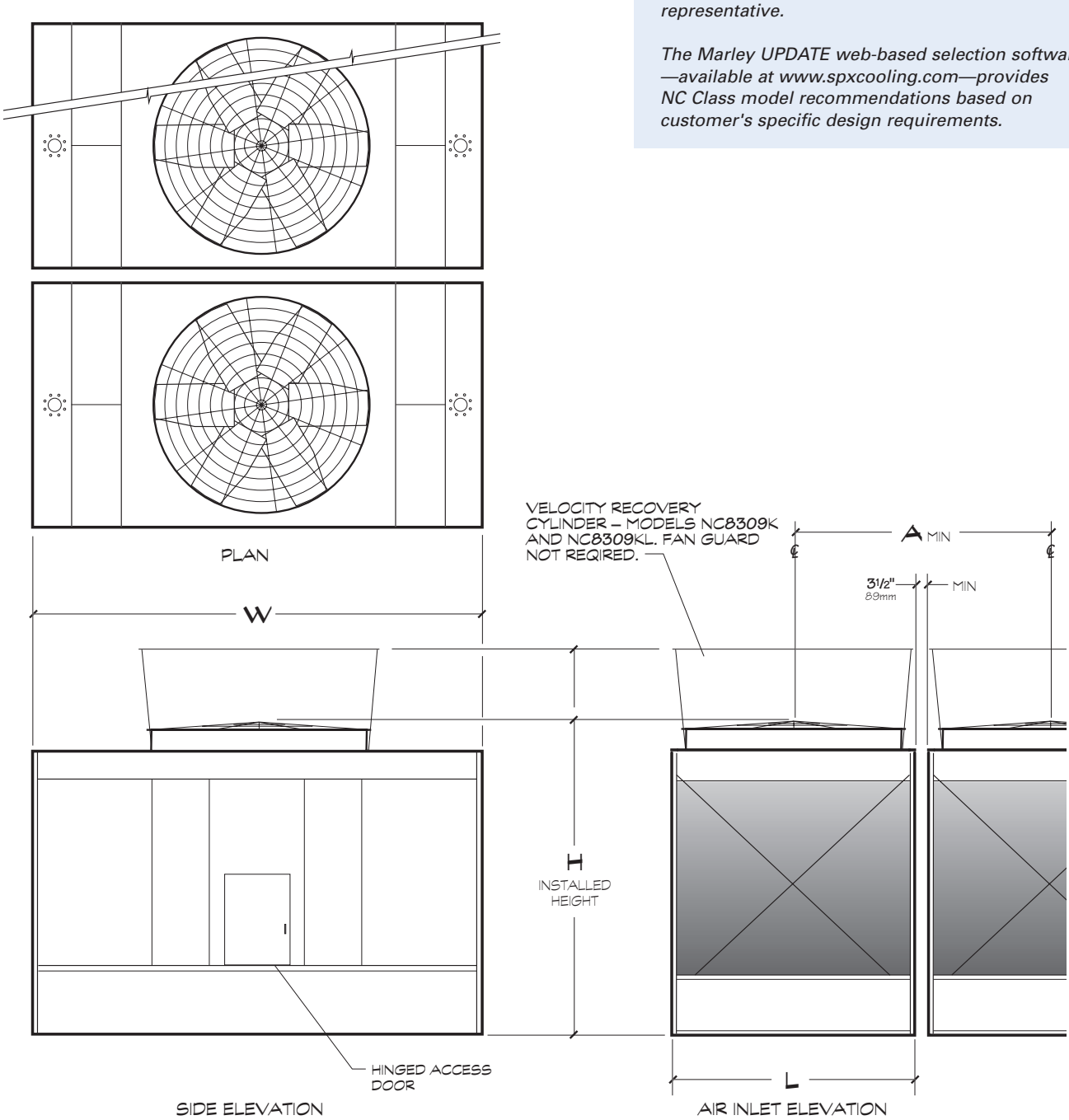

NC8309

Model note 2	Nominal Tons note 3	Motor hp	dBA 5'-0" from air inlet face	Design Operating Weight lb	Shipping Weight lb	Dimensions			
						L	W	H	A
NC8309CL-1	481	15	67	32097	14501	13'-11"	22'-5"	13'-4"	14'-2"
NC8309D-1	532	20	72						
NC8309DL-1	534	20	70						
NC8309E-1	575	25	73						
NC8309EL-1	572	25	71						
NC8309F-1	609	30	77						
NC8309FL-1	603	30	73						
NC8309G-1	663	40	77						
NC8309GL-1	661	40	74						
NC8309H-1	702	50	81						
NC8309HL-1	696	50	75						
NC8309J-1	741	60	83						
NC8309JL-1	739	60	78						
NC8309K-1	752	60	83	32261	14665	13'-11"	22'-5"	16'-10"	14'-2"
NC8309KL-1	750	60	78						

NOTE

1 **Use this bulletin for preliminary layouts only.** Obtain current drawings from your Marley sales representative. All table data is per cell.
2 Last numeral of model number indicates number of cells. Change as appropriate for your selection.
3 Nominal tons are based upon 95°F HW, 85°F CW, 78°F WB and 3 GPM/ton. The Marley ***UPDATE*** web-based selection software provides NC Class model recommendations based on specific design requirements.
4 Standard overflow is a 4" dia. standpipe in the collection basin floor. The standpipe removes for flush-out and draining. See page 22 for side overflow option.
5 Outlet sizes vary according to GPM and arrangement. See pages 22 and 23 for outlet sizes and details.
6 Makeup water connection may be 1" or 2" dia., depending upon tower heat load, water pressure, and desired connections. See page 17 for additional information.

NC8310 NC8311

Use this data for preliminary layouts only. Obtain current drawing from your Marley sales representative.

The Marley UPDATE web-based selection software —available at www.spxcooling.com—provides NC Class model recommendations based on customer's specific design requirements.

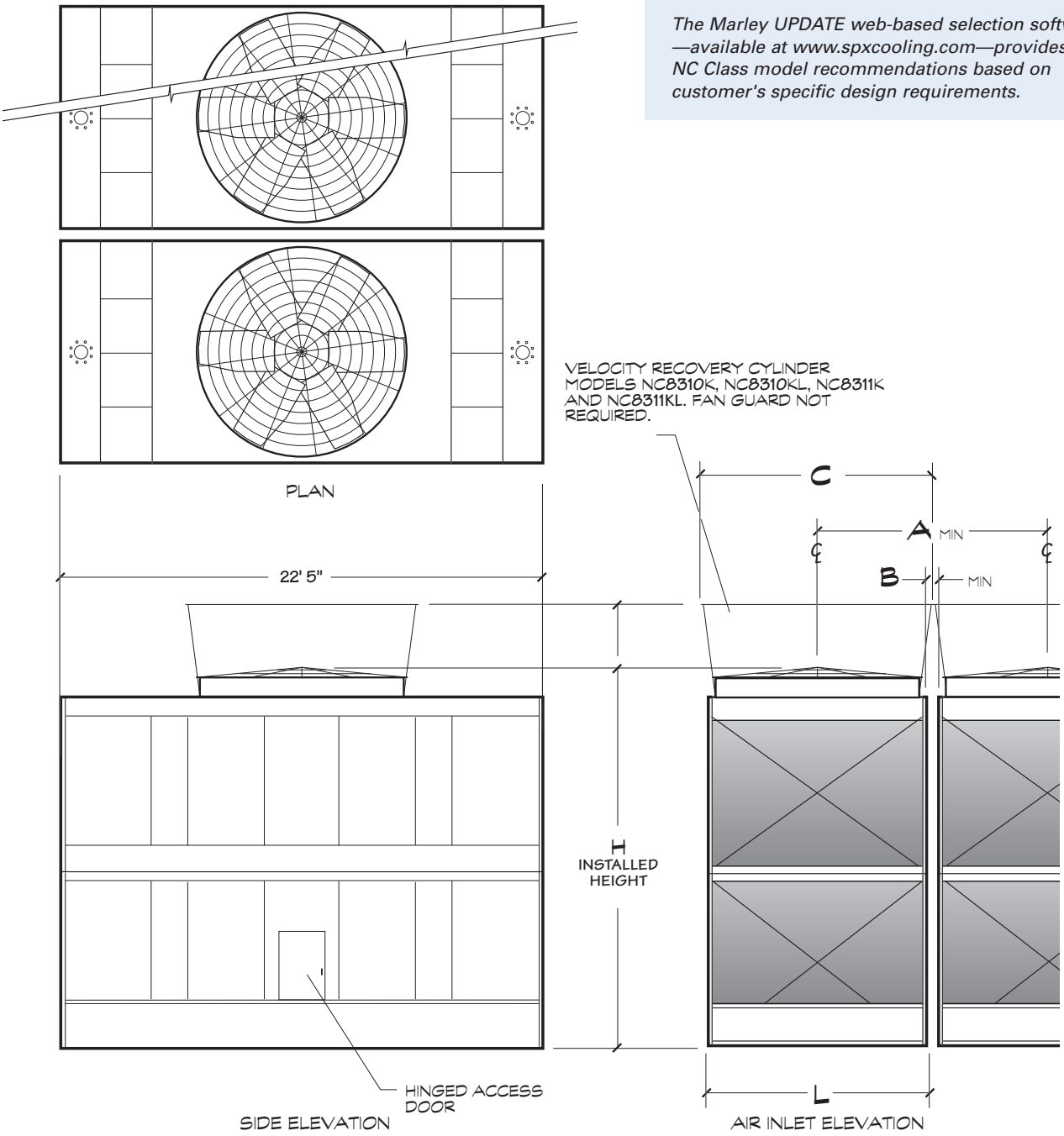

NC8310 NC8311

Model note 2	Nominal Tons note 3	Motor hp	dBA 5'-0" from air inlet face	Design Operating Weight lb	Shipping Weight lb		Dimensions				
					Weight/ Cell	Heavist Section	L	H	A	B	C
NC8310C-1	567	20	70	34524	16847	9569	10'-11"	19'-10"	11'-2"	4"	
NC8310CL-1	567	20	68								
NC8310D-1	611	25	73								
NC8310DL-1	611	25	70								
NC8310E-1	650	30	75								
NC8310EL-1	650	30	72								
NC8310F-1	706	40	77								
NC8310FL-1	718	40	75								
NC8310G-1	784	50	78								
NC8310GL-1	758	50	76								
NC8310H-1	833	60	81								
NC8310HL-1	814	60	78								
NC8310J-1	890	75	86								
NC8310JL-1	880	75	81								
NC8310K-1	925	75	86	34524	16847	9569	10'-11"	23'-4"	11'-10"	11"	11'-9"
NC8310KL-1	915	75	81								
NC8311AL-1	503	10	64	37144	17791	9992	11'-11"	19'-10"	12'-2"	4"	
NC8311BL-1	579	15	67								
NC8311CL-1	635	20	68								
NC8311D-1	686	25	73								
NC8311DL-1	683	25	70								
NC8311E-1	716	30	76								
NC8311EL-1	727	30	71								
NC8311F-1	796	40	77								
NC8311FL-1	792	40	73								
NC8311G-1	849	50	78								
NC8311GL-1	849	50	76								
NC8311H-1	908	60	83								
NC8311HL-1	902	60	77								
NC8311J-1	969	75	84								
NC8311JL-1	966	75	79								
NC8311K-1	1000	75	84	37305	17952	10153	11'-11"	23'-4"	12'-10"	11"	12'-9"
NC8311KL-1	1000	75	79								

NOTE

1 **Use this bulletin for preliminary layouts only.** Obtain current drawings from your Marley sales representative. All table data is per cell.
2 Last numeral of model number indicates number of cells. Change as appropriate for your selection.
3 Nominal tons are based upon 95°F HW, 85°F CW, 78°F WB and 3 GPM/ton. The Marley ***UPDATE*** web-based selection software provides NC Class model recommendations based on specific design requirements.
4 Standard overflow is a 4" dia. standpipe in the collection basin floor. The standpipe removes for flush-out and draining. See page 22 for side overflow option.
5 Outlet sizes vary according to GPM and arrangement. See pages 22 and 23 for outlet sizes and details.
6 Makeup water connection may be 1" or 2" dia., depending upon tower heat load, water pressure, and desired connections. See page 17 for additional information.

NC8312

Use this data for preliminary layouts only. Obtain current drawing from your Marley sales representative.

The Marley UPDATE web-based selection software —available at www.spxcooling.com—provides NC Class model recommendations based on customer's specific design requirements.

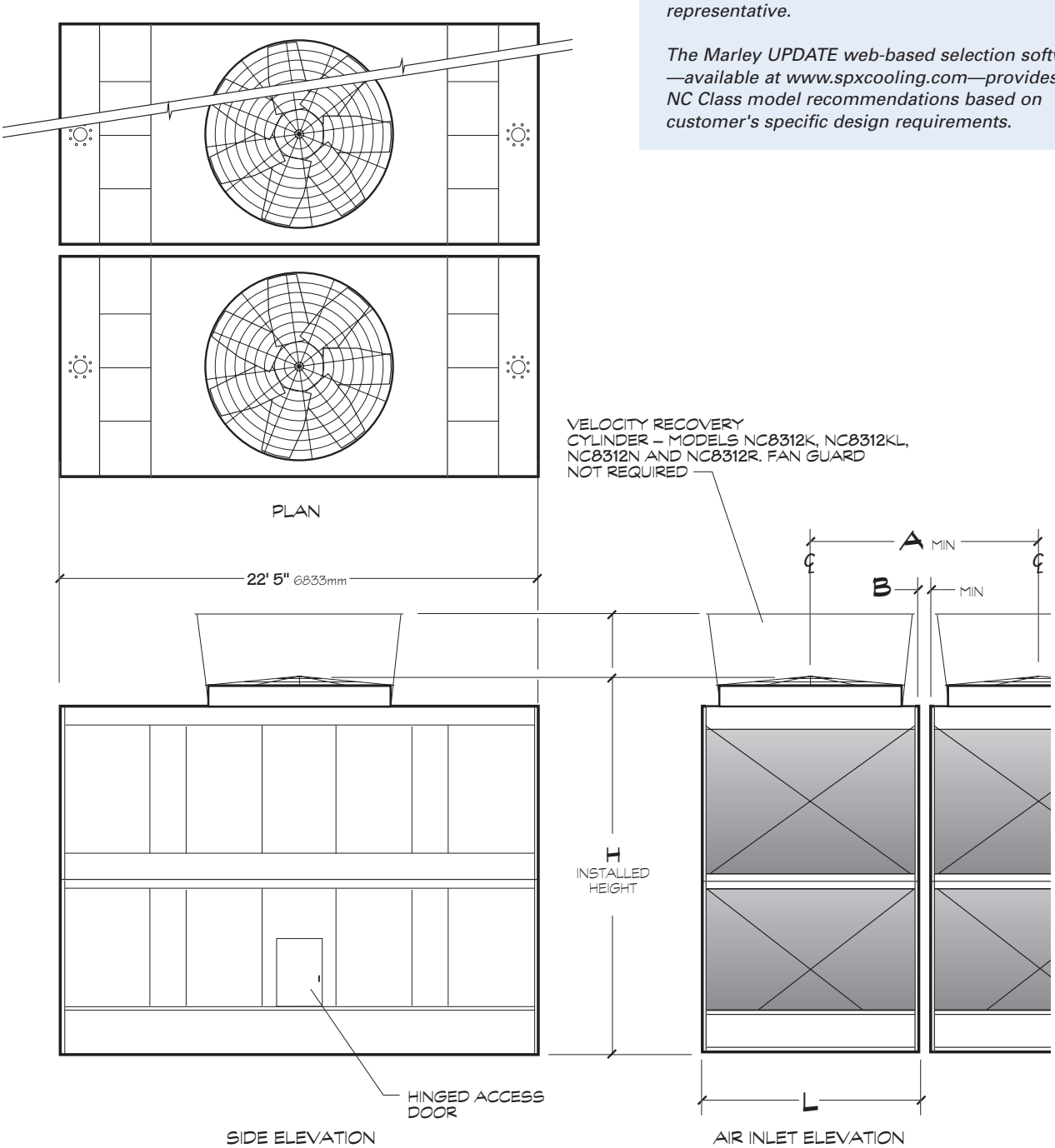

NC8312

Model note 2	Nominal Tons note 3	Motor hp	dBA 5'-0" from air inlet face	Design Operating Weight lb	Shipping Weight lb		Dimensions			
					Weight/Cell	Heaviest Section	L	H	A	B
NC8312BL-1	626	15	66	42981	20341	11423	13'-11"	19'-10"	14'-2"	4"
NC8312CL-1	687	20	67							
NC8312D-1	753	25	72							
NC8312DL-1	753	25	69							
NC8312E-1	787	30	73							
NC8312EL-1	792	30	70							
NC8312F-1	873	40	74							
NC8312FL-1	865	40	71							
NC8312G-1	950	50	75							
NC8312GL-1	947	50	73							
NC8312H-1	1003	60	79							
NC8312HL-1	1000	60	75							
NC8312J-1	1065	75	84							
NC8312JL-1	1066	75	78							
NC8312K-1	1102	75	84	44427	21787	12869	13'-11"	23'-4"	14'-2"	4"
NC8312KL-1	1102	75	78							
NC8312N-1	1200	100	83							
NC8312NL-1	1215	100	77							
NC8312R-1	1274	125	85							

NOTE

1 **Use this bulletin for preliminary layouts only.** Obtain current drawings from your Marley sales representative. All table data is per cell.
2 Last numeral of model number indicates number of cells. Change as appropriate for your selection.
3 Nominal tons are based upon 95°F HW, 85°F CW, 78°F WB and 3 GPM/ton. The Marley ***UPDATE*** web-based selection software provides NC Class model recommendations based on specific design requirements.
4 Standard overflow is a 4" dia. standpipe in the collection basin floor. The standpipe removes for flush-out and draining. See page 22 for side overflow option.
5 Outlet sizes vary according to GPM and arrangement. See pages 22 and 23 for outlet sizes and details.
6 Makeup water connection may be 1" or 2" dia., depending upon tower heat load, water pressure, and desired connections. See page 17 for additional information.

Tired of having to design your piping and tower layout to accommodate the standards of cooling tower manufacturers? Marley's multiple variety of piping systems accommodates your design intentions to make your layout of the NC Class both expedient and economical.

- Single or dual hot water inlet connections.
- Side inlet, bottom inlet or top inlet connections.
- Side or bottom cold water outlet connections.
- A variety of makeup, overflow and drain options.

All piping from the single inlet connection to the distribution basins is part of the tower package. Installation and design costs are reduced and the need for extra piping and supports are eliminated. The single bottom inlet connection is perfect for multicell applications—keeping all the inlet piping below the tower.

Unless otherwise specified, single-cell towers normally have a side-outlet suction appropriate for the design water flow rate—see pages 22 and 23. This usually assures the lowest possible installed tower elevation. Side-suction connection pipes extend approximately 3" outside the basin, and are beveled for weld connection and also grooved for a mechanical coupling.

Outlet piping can be kept below the cold water basin level by choosing either a depressed sump or a bottom outlet connection in lieu of the side suction. Both outlet designs conform to standard class 125 ANSI pipe flange specifications. Easily removable debris screens are optional on bottom outlets and are standard on all other outlet arrangements.

Depressed sumps are made of inert fire-retardant FRP or heavy-gauge welded stainless steel. Unless otherwise specified towers with galvanized steel collection basins are supplied with FRP sumps and towers with stainless steel basins are supplied with stainless sumps.

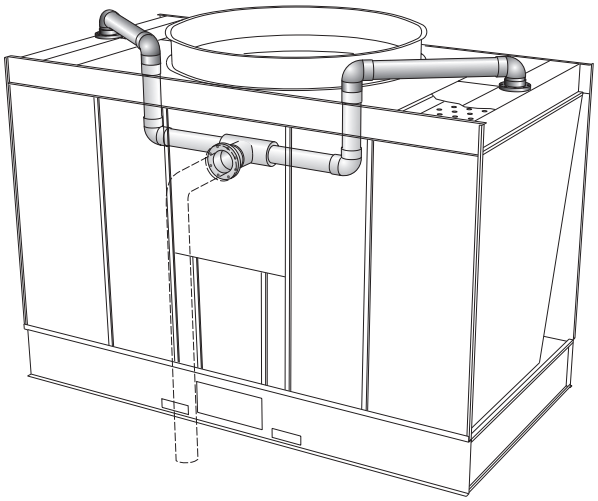

Multicell towers, intended to operate together as a common unit, are joined by steel flumes between the collection basins. These flumes equalize the operating water level between basins and also provide a flow passage from cells not equipped with outlets or makeup valves, often eliminating the need to specify an outlet and makeup valve for each cell on a multicell installation. Select the number of outlets required to maintain a maximum flow of 1371 GPM through each flume for NC8301 through NC8306 models and 2203 GPM for NC8307 through NC8312 models. Flow values are for side-suctions or bottom-outlets without trash screen. Refer to NC sales drawings to obtain flow values for sumps and bottom outlets with trash screens.

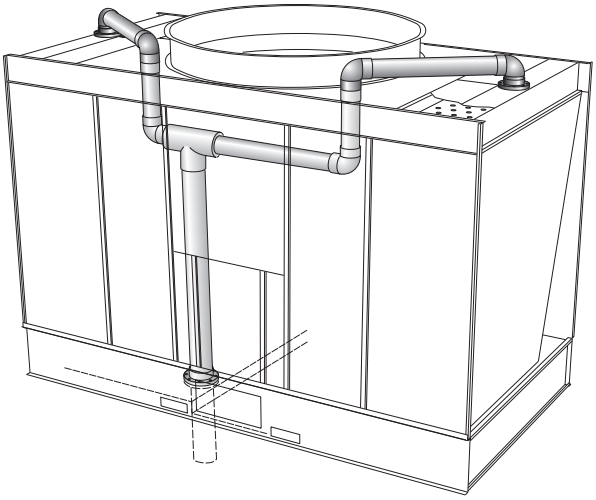

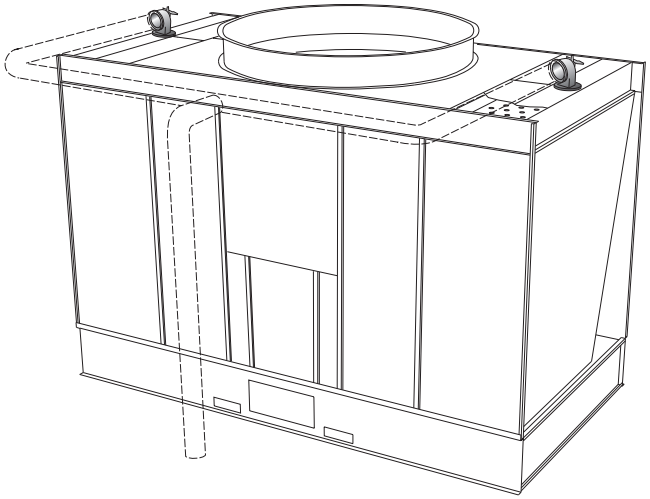

If each cell is to be equipped with an outlet, side-suctions can be used on end cells of multicell towers, but not on interior cells. For direct outlet from each cell on installations of three or more cells, use either the depressed sump or bottom outlet on interior cells.

The best choice for a tower used with a remote or indoor storage tank—see page 26—or on a concrete cold water basin is usually a bottom outlet.

A side-suction equipped tower can be installed on a flat concrete slab if a side drain and overflow are also specified—see page 22. Consult your Marley sales representative for complete information.

Makeup

The amount of water constantly evaporated from a cooling tower varies directly with the heat load applied. In addition to evaporation, water is normally lost to the blowdown (bleed-off) necessary to maintain dissolved solids concentration at an acceptable level in the circulating water system.

The NC is equipped with one or more float-operated, mechanical makeup valves to automatically replenish this lost water. The tables on this page, calculated for a concentration of 3 times normal, indicate the rate of water loss—and the size of valve(s) required. If your installation's cold water basin will drain by gravity to a remote storage tank—or if you plan a separate means of controlling makeup water—a price reduction is available for deleting the Marley valve(s). We also offer an optional electronic liquid-level contol.

Makeup Water Flow Required–GPM to Maintain Three (3) Concentrations

Tower GPM	Cooling "Range" (hot water minus cold water)					
	5°F	10°F	15°F	20°F	30°F	40°F
200	2	3	4	5	8	10
400	3	5	8	10	15	20
600	4	8	12	15	23	30
800	5	10	15	20	30	40
1000	7	13	19	25	38	50
1500	10	19	29	38	57	75
2000	13	25	38	50	75	100
3000	19	38	57	75	113	150
4000	25	50	75	100	150	200
5000	32	63	94	125	188	250
6000	38	75	113	150	225	300
8000	50	100	150	200	300	400

NOTE

If circulating water is to be maintained at 2 concentrations instead of 3, multiply table GPM values by 1.36 before sizing makeup valve.

Makeup Valve Flow Capacities–GPM

Pressure at Valve Inlet while flowing–psig	1" Diameter Valve	2" Diameter Valve
10	56	90
20	78	120
30	92	143
40	106	160
50	117	167

NOTE

- If makeup water pressure exceeds 50 psig, use pressure reducer ahead of valve.
- For flow requirements exceeding the above limitations, use multiples of the same size valve.

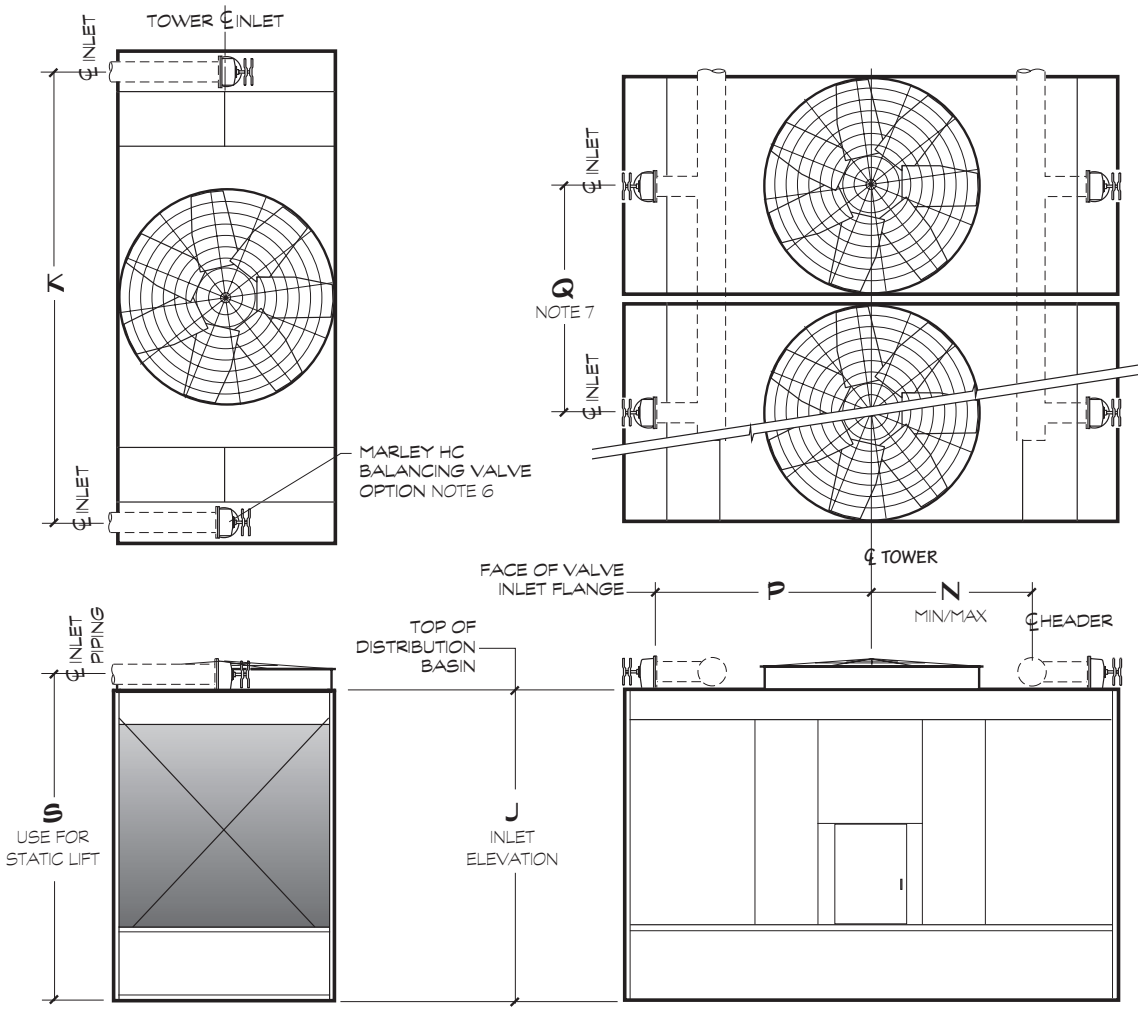

SINGLE CELL

MULTICELL

Model	Dimensions							Inlet Diameter
	J	K	S	N MIN / MAX		P	Q	
NC8301	8'-8 11/16"	12'-3"	9'-4 15/16"	3'-11 1/2"	4'-10"	5'-10"	6'-8 1/4"	2 at 6"
NC8302	8'-8 11/16"	13'-9"	9'-4 15/16"	5'-10 1/4"	Fit "P"	6'-7"	8'-2 1/4"	2 at 6"
NC8303	10'-5 9/16"	13'-9"	11'-1 13/16"	5'-10 1/4"	Fit "P"	6'-7"	8'-2 1/4"	2 at 6"
NC8304	11'-5 9/16"	15'-3"	12'-1 13/16"	5'-10 1/4"	Fit "P"	7'-4"	9'-2 1/4"	2 at 6"
NC8305	11'-5 9/16"	16'-10"	12'-2 13/16"	5'-11 3/4"	Fit "P"	8'-1 1/2"	11'-2 1/4"	2 at 8"
NC8306	11'-5 9/16"	17'-11"	12'-2 13/16"	6'-1 5/8"	Fit "P"	8'-8"	12'-2 1/4"	2 at 8"
NC8307	11'-9 9/16"	20'-6"	12'-6 13/16"	6'-1 5/8"	Fit "P"	9'-11 1/2"	12'-2 1/4"	2 at 8"
NC8309	11'-9 9/16"	20'-3 1/2"	12'-8 13/16"	6'-10 5/8"	Fit "P"	9'-9 1/2"	14'-2 1/4"	2 at 10"

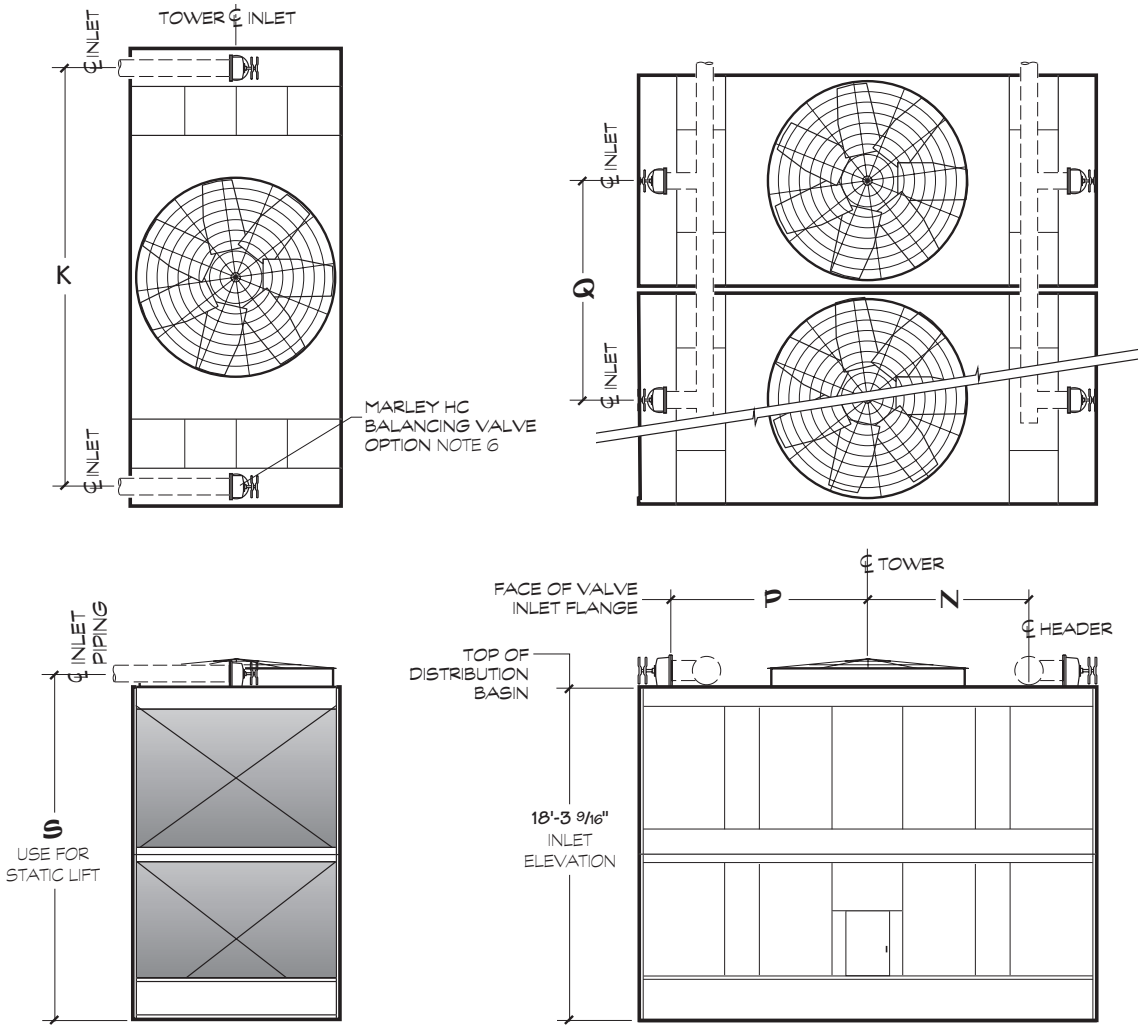

SINGLE CELL

MULTICELL

Model	Dimensions					Inlet Diameter
	K	S	N	Q	P	
NC8310C thru NC8310JL	20'-6"	19'-0 13/16"	6'-1 5/8"	11'-2 1/4"	9'-11 1/2"	2 at 8"
NC8310K and NC8310KL	20'-6"	19'-0 13/16"	6'-1 5/8"	11'-9 1/2"	9'-11 1/2"	2 at 8"
NC8311AL thru NC8311JL	20'-6"	19'-0 13/16"	6'-1 5/8"	12'-2 1/4"	9'-11 1/2"	2 at 8"
NC8311K and NC8311KL	20'-6"	19'-0 13/16"	6'-1 5/8"	12'-9 1/2"	9'-11 1/2"	2 at 8"
NC8312	20'-3 1/2"	19'-2 9/16"	6'-10 5/8"	14'-2 1/4"	9'-9 1/2"	2 at 10"

NOTE

1 **Use this bulletin for preliminary layouts only.** Obtain current drawings from your Marley sales representative.
2 Pumping head contributed by the tower is static lift **"S"**. Add your system dynamic pipe losses for total.
3 The tower will support the vertical weight of piping shown within the plan area of the tower only. All piping loads, including thrust and lateral loads of riser and horizontal piping must be supported independent of the tower. See inlet piping drawings for details.
4 All piping and supports—and their design—are by others.
5 Allow adequate clearance for entry to tower access doors and safe use of optional ladder. Refer to appropriate Marley drawings.
6 You may choose to use 90° short radius flanged elbows in place of HC balancing valves on single-cell towers where inlet piping is balanced for equal flow. Pipe elevation remains as shown.

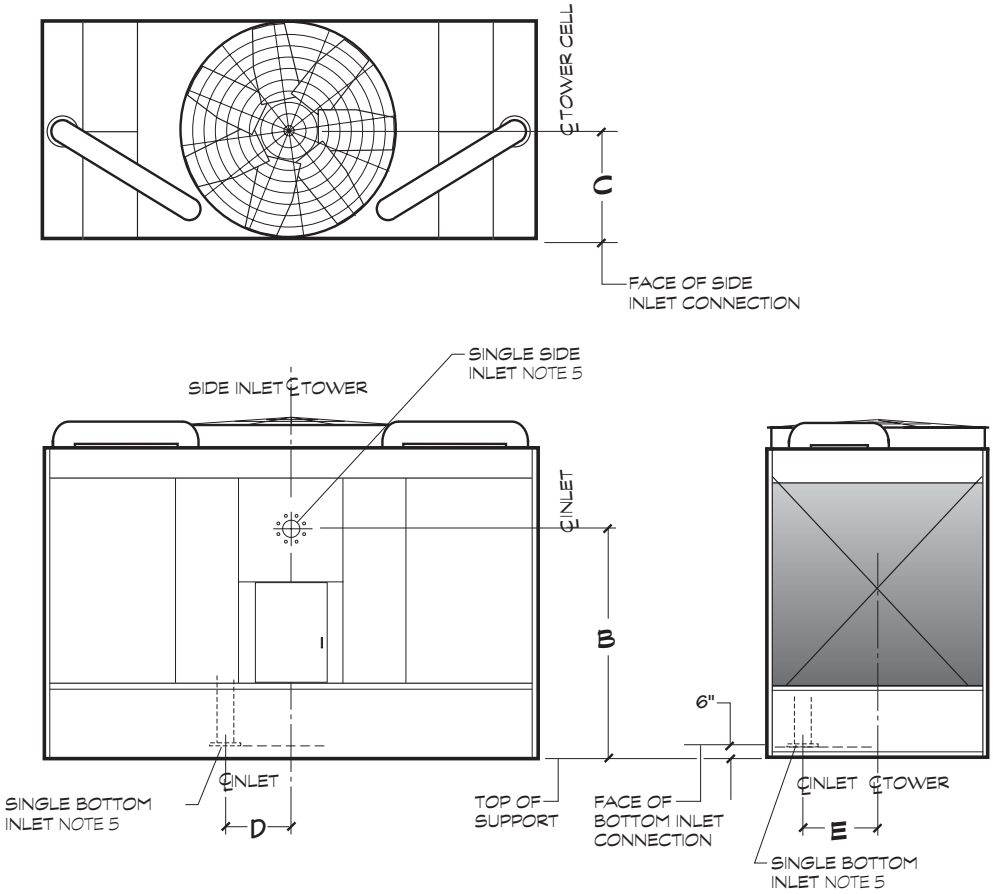

Model	Dimensions				Inlet Diameter
	B	C	D	E	
NC8301	6'-8 1/4"	3'-0 5/16"	2'-4 15/16"	1'-11 13/16"	6"
NC8302	6'-6 15/16"	3'-9 5/16"	2'-8"	2'-5 5/16"	8"
NC8303	8'-3 13/16"	3'-9 5/16"	2'-8"	2'-5 5/16"	8"
NC8304	9'-3 13/16"	4'-3 5/16"	2'-10 3/8"	2'-11 5/16"	8"
NC8305	9'-3 3/16"	5'-3 5/16"	2'-8 7/8"	3'-10 1/8"	10"
NC8306	9'-3 3/16"	5'-9 5/16"	2'-8 7/8"	4'-4 1/8"	10"
NC8307	9'-7 3/16"	5'-9 5/16"	2'-8 7/8"	4'-4 1/8"	10"
NC8309	9'-7 3/16"	6'-9 5/16"	2'-4"	3'-9"	10"

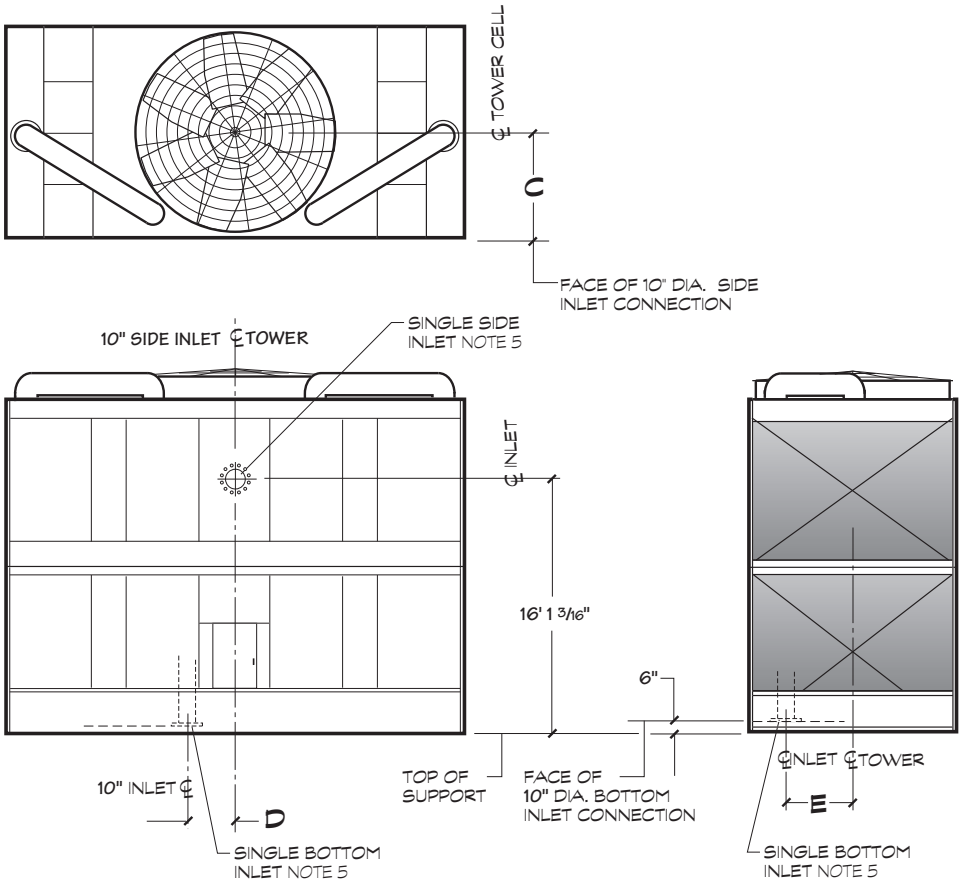

Model	Dimensions		
	C	D	E
NC8310	5'-3 5/16"	2'-8 7/8"	3'-10 1/8"
NC8311	5'-9 5/16"	2'-8 7/8"	4'-4 1/8"
NC8312	6'-9 5/16"	2'-4"	3'-9"

NOTE

1 **Use this bulletin for preliminary layouts only.** Obtain current drawings from your Marley sales representative.
2 All external piping loads, including weight, thrust and lateral loads of riser and horizontal piping plus the weight of water in the internal riser must be supported independent of the tower. Internal riser adds additional vertical operating loads to external piping at the bottom inlet flange.
3 All piping and supports beyond the inlet connection—and their design—are by others.
4 Allow adequate clearance for entry to tower access doors and safe use of optional ladder. Refer to appropriate Marley drawings.
5 You may choose either a bottom inlet connection or aside inlet connection. The bottom inlet connects at the tower collection basin floor. Refer to appropriate Marley drawings.
6 Contact your Marley sales representative for the required pump head for single-inlet applications.
7. Weight of internal piping must be added to tower weights. Contact your Marley sales representative for combined tower weight information.

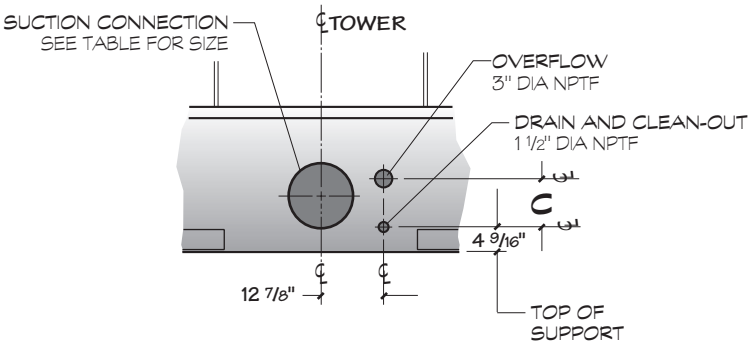

DRAIN AND OVERFLOW CONNECTION OPTION

Model	Dimensions		
	A	B	C
NC8301	10"	3'-3 3/16"	6 7/8"
NC8302	10"	4'-0 3/16"	6 7/8"
NC8303	10"	4'-0 3/16"	6 7/8"
NC8304	10"	4'-6 3/16"	6 7/8"
NC8305	10"	5'-6 3/16"	6 7/8"
NC8306	10"	6'-0 3/16"	6 7/8"
NC8307	11 1/4"	6'-0 3/16"	10 3/16"
NC8309	11 1/4"	7'-0 3/16"	10 3/16"
NC8310	11 1/4"	5'-6 3/16"	10 3/16"
NC8311	11 1/4"	6'-0 3/16"	10 3/16"
NC8312	11 1/4"	7'-0 3/16"	10 3/16"

NOTE

Standard overflow is a 4" dia. standpipe in the collection basin floor. The standpipe removes for flush-out and draining.

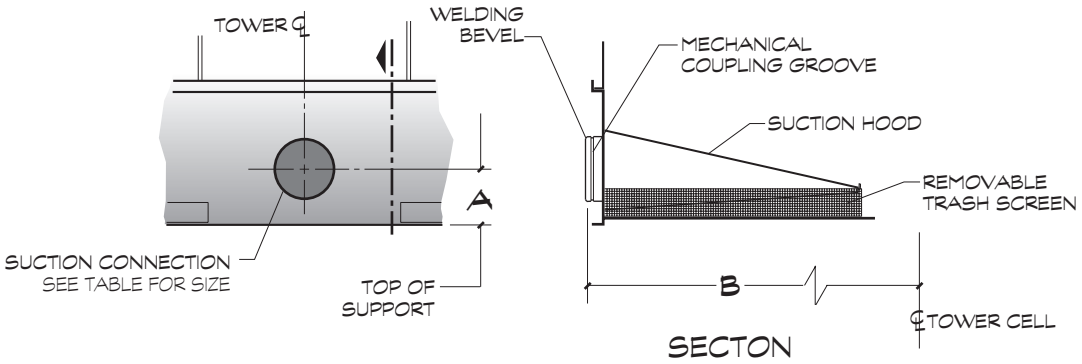

SIDE-OUTLET SUCTION CONNECTION

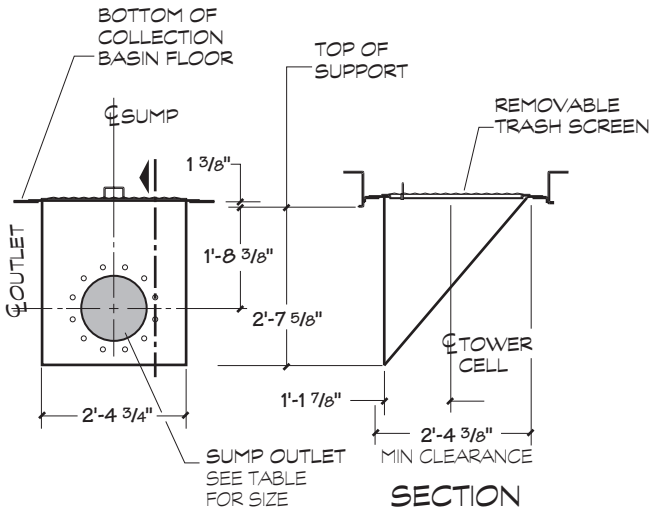

DEPRESSED SIDE-OUTLET SUMP CONNECTION

STAINLESS STEEL OR FRP

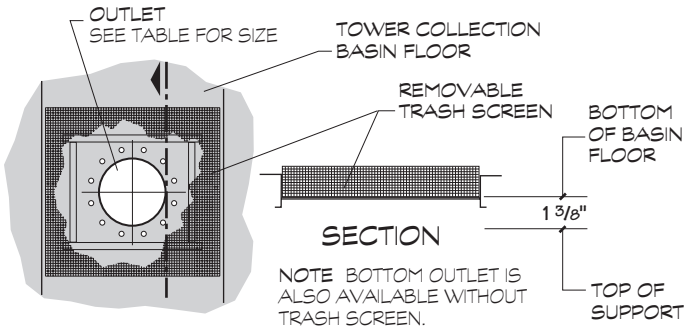

BOTTOM OUTLET CONNECTION

Maximum GPM per Outlet								
Outlet Diameter	**Side Suction** pump flow		**Sump** pump flow w/o anti-vortex plate	**Sump** pump flow w/ anti-vortex plate or gravity flow w/ or w/o anti-vortex plate		**Bottom Outlet** pump flow w/o anti-vortex plate	**Bottom Outlet** pump flow w/ ant-vortex plate or gravity f;pw w/ or w/o anti-vortex plate	
	NC8301 thru **NC8306**	**NC8307** and **NC8309** thru **NC8312**	**NC8301** thru **NC8312**	**NC8301** thru **NC8306**	**NC8307** and **NC8309** thru **NC8312**	**NC8301** thru **NC8312**	**NC8301** thru **NC8306**	**NC8307** and **NC8309** thru **NC8312**
4"						71	157	
6"	900		630	895	900	162	355	
8"	1595	1595	1116	1584	1595	287	629	673
10"	2515	2515	1760	2498	2515	453	992	1061
12"	2720 **NC8301** thru **NC8304** 3501 **NC8305** **NC8306**	3578	2504	3458	3578	644	1412	1509
14"		4252	3065	3458	4378	788	1728	1847
16"						1041	2283	2441
18"						1349	2958	3162
20"						1675	3321	4045
24"						2433	4018	4897

NOTE

- For gravity-flow situations (as to an indoor tank), use bottom outlet or depressed side outlet sump. Side outlet suction is not recommended for gravity flow.
- GPM limits are the outlet capacities per outlet based on the design operating water level—8½" above the top of support on models NC8301 through NC8306—9½" on NC8307 thru NC8312.

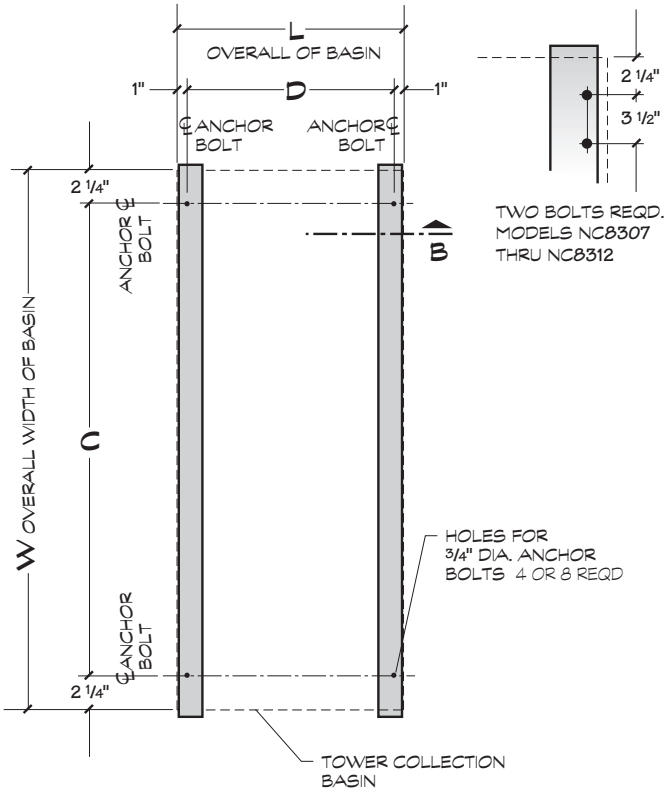

SUPPORTING STEEL
SINGLE CELL

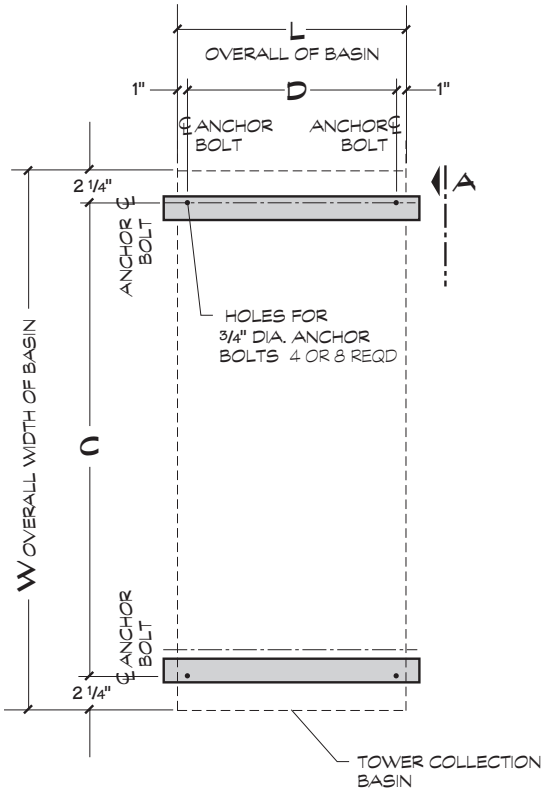

SUPPORTING STEEL ALTERNATE
SINGLE CELL

Model	Dimensions					Design Operating Wt/Cell lb	Design Operating Load at Anchor lb	Wind/Seismic Loads lb note 4	
	W	L	C	D	E note 7			Max Vertical Reaction at Anchor	Max Horizontal Reaction at Anchor
NC8301	14'-0"	6'-4 ¾"	13'-7 ½"	6'-2 ¾"	5 ½"	9116	2279	1364/3461	943/2279
NC8302	15'-6"	7'-10 ¾"	15'-1 ½"	7'-8 ¾"	5 ½"	11256	2814	1221/3471	1046/2814
NC8303	15'-6"	7'-10 ¾"	15'-1 ½"	7'-8 ¾"	5 ½"	12022	3005	1737/4622	1248/3005
NC8304	17'-0"	8'-10 ¾"	16'-7 ½"	8'-8 ¾"	5 ½"	14699	3675	2019/5979	1498/3675
NC8305	18'-9"	10'-10 ¾"	18'-4 ½"	10'-8 ¾"	5 ½"	19486	4872	1803/8596	1648/4877
NC8306	19'-10"	11'-10 ¾"	19'-5 ½"	11'-8 ¾"	5 ½"	22969	5742	1759/9965	1750/5742
NC8307	22'-5"	11'-10 ¾"	22'-0 ½"	11'-8 ¾"	5 ½"	27256	6814	2090/8624	2029/6814
NC8309CL thru NC8309JL	22'-5"	13'-10 ¾"	22'-0 ½"	13'-8 ¾"	5 ½"	32097	8024	1801/10170	2037/8024
NC8309K and NC8309KL	22'-5"	13'-10 ¾"	22'-0 ½"	13'-8 ¾"	5 ½"	32261	8065	2271/10516	2256/8065
NC8310C thru NC8310JL	22'-5"	10'-10 ¾"	22'-0 ½"	10'-8 ¾"	5 ½"	34524	8631	5405/16343	3121/8631
NC8310K and NC8310KL	22'-5"	10'-10 ¾"	22'-0 ½"	10'-8 ¾"	12 ½"	34524	8631	5606/16343	3304/8631
NC8311AL thru NC8311JL	22'-5"	11'-10 ¾"	22'-0 ½"	11'-8 ¾"	5 ½"	37144	9286	4958/17503	3126/9286
NC8311K and NC8311KL	22'-5"	11'-10 ¾"	22'-0 ½"	11'-8 ¾"	12 ½"	37305	9326	5779/18328	3353/9630
NC8312BL thru NC8312JL	22'-5"	13'-10 ¾"	22'-0 ½"	13'-8 ¾"	5 ½"	42981	10745	4248/21064	3131/10745
NC8312K thru NC8312R	22'-5"	13'-10 ¾"	22'-0 ½"	13'-8 ¾"	5 ½"	44427	11107	4971/21932	3364/11107

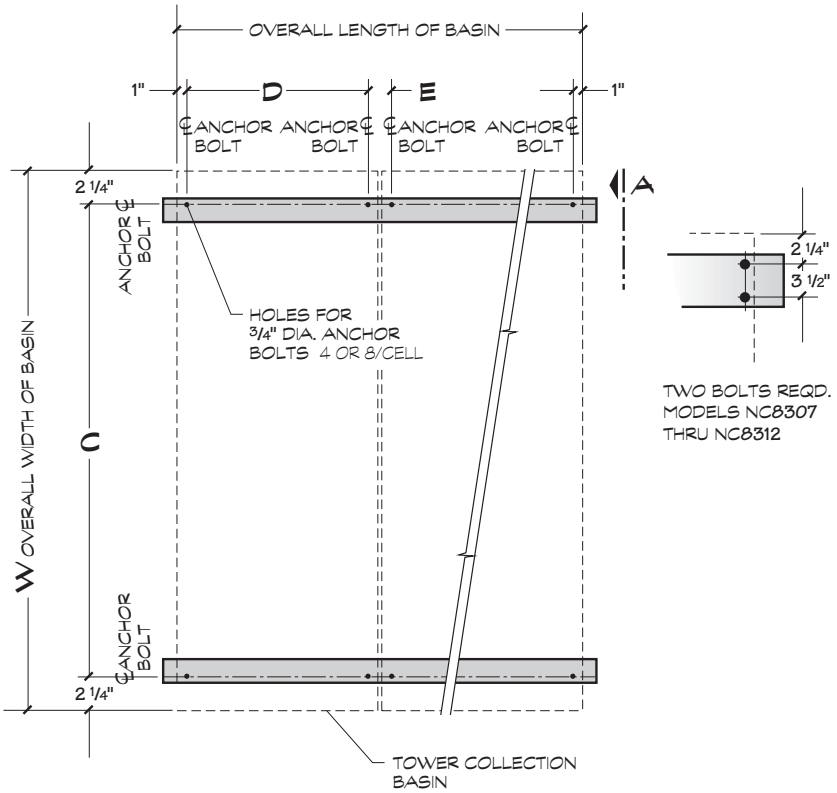

SUPPORTING STEEL
MULTICELL

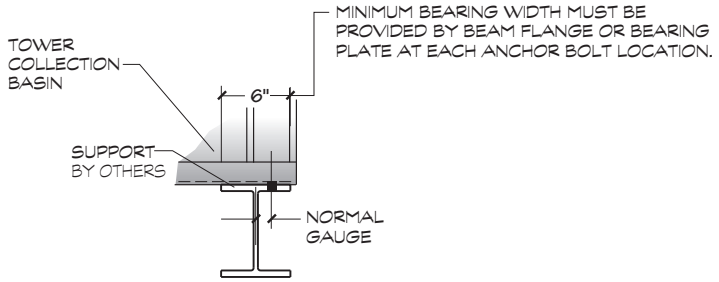

VIEW A

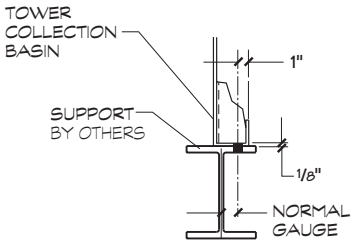

SECTION B

NOTE

1 **Use this bulletin for preliminary layouts only.** Obtain current drawings from your Marley sales representative for final design.
2 Purchaser to provide tower support complete with holes and anchor bolts. Do not use studs! Anchor points must be framed flush and level at top.
3 Design operating weight occurs with collection basin full to overflow level. Actual operating weight varies with GPM and piping scheme.
4 Wind loads are based on 30 psf and are additive to operating loads. Seismic loads will satisfy Zone 2B with importance factor of 1.0 per the 1997 UBC. Seismic reactions shown are for a 1g acceleration and may be factored down.
5 Tower may be placed on a flat concrete slab. Side outlet and optional side drain and overflow must be specified. See pages 16 and 22 and consult your Marley sales representative.
6 Tower may be supported from piers at each anchor bolt location, as a support alternative.
7. Dimensions between anchor bolts **"E"** may vary depending on the number of cells and options. Dimensions shown are for a standard two cell arrangement. Obtain current drawings from your Marley sales representative for final dimension.

When the ambient air temperature falls below 32°F, the water in a cooling tower can freeze. *Marley Technical Report #H-003* "Operating Cooling Towers in Freezing Weather" describes how to prevent freezing during operation. Available at spxcooling.com or ask your Marley sales representative for a copy.

During shutdown, water collects in the cold water basin and may freeze solid. You can prevent freezing by adding heat to the water left in the tower—or, you can drain the tower and all exposed pipework at shutdown.

Electric Basin Heaters

An automatic basin water heater system is available consisting of the following components:

- Stainless steel electric immersion heater(s).

  —Threaded couplings are provided in the side of the collection basin.

- NEMA 4 enclosure containing:

  —Magnetic contactor to energize heater.

  —Transformer to convert power supply to 24 volts for control circuit.

  —Solid state circuit board for temperature and low-water cutoff.

  Enclosure may be mounted on the side of the tower.

- Control probe in the collection basin to monitor water temperature and level.

Heater components are normally shipped separately for installation by others.

Note: any exposed piping that is still filled with water at shutdown—including the makeup water line—should be electrically traced and insulated (by others).

Steam Jet Basin Heaters

Penberthy Houdaille bronze steam jet heaters (¼" to ¾") are available for freeze protection (installation by others). Injectors install in a coupling provided in the side of the collection basin. Live steam, as required, is injected directly into the water. Condensed steam adds water to the basin, and the excess will exit the overflow of the tower.

Indoor Storage Tank

With this type of system, water flows from an indoor tank, through the load system, and back to the tower, where it is cooled. The cooled water flows by gravity from the tower to the tank located in a heated space. At shutdown, all exposed water drains into the tank, where it is safe from freezing.

The table on page 27 lists typical drain-down capacities for all NC Class tower models. Although we do not produce tanks, many of our representatives offer tanks supplied by reputable manufacturers.

The amount of water needed to successfully operate the system depends on the tower size and GPM and on the volume of water contained in the piping system to and from the tower. You must select a tank large enough to contain those combined volumes—plus a level sufficient to maintain a flooded suction on your pump. Control makeup water according to the level where the tank stabilizes during operation.

NC Class Drain-Down Capacity					
Model	Range of Tower Design GPM	Drain Down Maximum Gallons	Model	Range of Tower Design GPM	Drain Down Maximum Gallons
NC8301	130-280	391	**NC8307**	480-830	1256
	290-480	413		840-1140	1415
	490-700	436		1450-2090	1508
	710-920	458		2100-2730	1589
	930-1200	476		2740-3410	1656
NC8302	160-340	488	**NC8309**	480-1220	1575
	350-500	512		1230-1930	1683
	550-680	531		1940-2460	1762
	690-1140	578		2470-3210	1855
	1150-1530	601		3220-4100	1962
NC8303	160-340	585	**NC8310**	350-630	1394
	350-500	546		640-950	1507
	510-680	570		960-1320	1607
	690-1140	627		1330-1910	1746
	1150-1530	656		1920-3120	1974
NC8304	190-390	622	**NC8311**	480-690	1526
	400-570	655		700-1040	1649
	580-770	683		1050-1440	1755
	780-1290	755		1450-2090	1909
	1300-1730	791		2100-3410	2156
NC8305	310-650	928	**NC8312**	480-810	1773
	660-940	977		820-1220	1917
	950-1280	1029		1230-1690	2042
	1290-2140	1146		1700-2460	2226
	2150-2810	1208		2470-4100	2549
NC8306	340-710	1019			
	720-1240	1115			
	1250-1790	1189			
	1800-2340	1258			
	2350-3080	1325			

NOTE

Volumes shown are maximums for the GPM ranges indicated. Actual volumes will usually be less. Contact your Marley sales representative for more specific information.

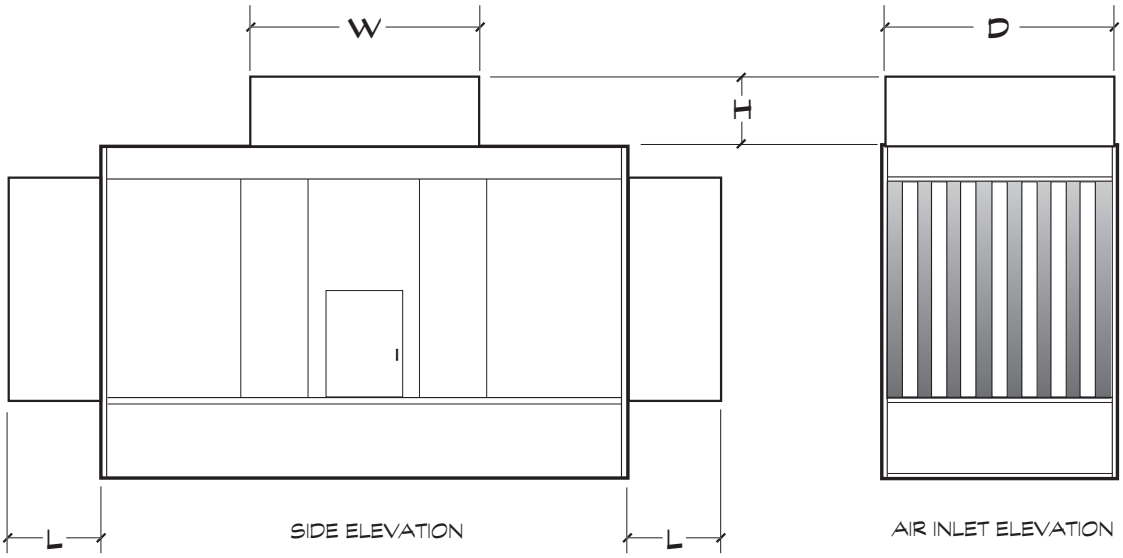

Model	Dimensions				Add To Design Operating Weight lb	
	L	W	D	H	Discharge Attentuator	Inlet Attentuators
NC8301	2'-0 ½"	6'-3 ½"	6'-4"	3'-2 ¼"	800	1200
	4'-1"	6'-3 ½"	6'-4"	5'-4"	1450	2400
NC8302	2'-0 ½"	7'-9 ½"	7'-10"	3'-2 ¼"	900	1550
	4'-1"	7'-9 ½"	7'-10"	5'-4"	1550	3100
NC8303	2'-0 ½"	7'-9 ½"	7'-10"	3'-2 ¼"	900	1940
	4'-1"	7'-9 ½"	7'-10"	5'-4"	1550	3880
NC8304	2'-0 ½"	8'-9 ½"	8'-10"	3'-2 ¼"	1250	2100
	4'-1"	8'-9 ½"	8'-10"	5'-4"	2300	4200
NC8305	2'-0 ½"	8'-9 ½"	10'-10"	3'-2 ¼"	1300	2500
	4'-1"	8'-9 ½"	10'-10"	5'-4"	2400	5000
NC8306	2'-0 ½"	10'-9 ¾"	11'-10"	3'-2 ¼"	1600	2600
	4'-1"	10'-9 ¾"	11'-10"	5'-4"	3000	5200
NC8307	2'-0 ½"	10'-9 ¾"	11'-10"	3'-2 ¼"	1600	2650
	4'-1"	10'-9 ¾"	11'-10"	5'-4"	3000	5300
NC8309	2'-0 ½"	12'-9 ¾"	13'-10"	3'-2 ¼"	1800	2800
	4'-1"	12'-9 ¾"	13'-10"	5'-4"	3300	5600
NC8310	2'-0 ½"	10'-9 ¾"	10'-10"	3'-2 ¼"	1550	4700
	4'-1"	10'-9 ¾"	10'-10"	5'-4"	2950	9400
NC8311	2'-0 ½"	11'-9 ¾"	11'-10"	3'-2 ¼"	1700	5000
	4'-1"	11'-9 ¾"	11'-10"	5'-4"	3200	10000
NC8312	2'-0 ½"	12'-9 ¾"	13'-10"	3'-2 ¼"	1800	5100
	4'-1"	12'-9 ¾"	13'-10"	5'-4"	3300	10250

NOTE

1 **Use this bulletin for preliminary layouts only.** Obtain current drawings from your Marley sales representative. All table data is per cell.
2 Attenuators are field installed by others with hardware provided by Marley
3 Attenuators are supported by the tower. Additional support not required.
4 Discharge attenuators are not available for NC models with velocity recovery cylinders.

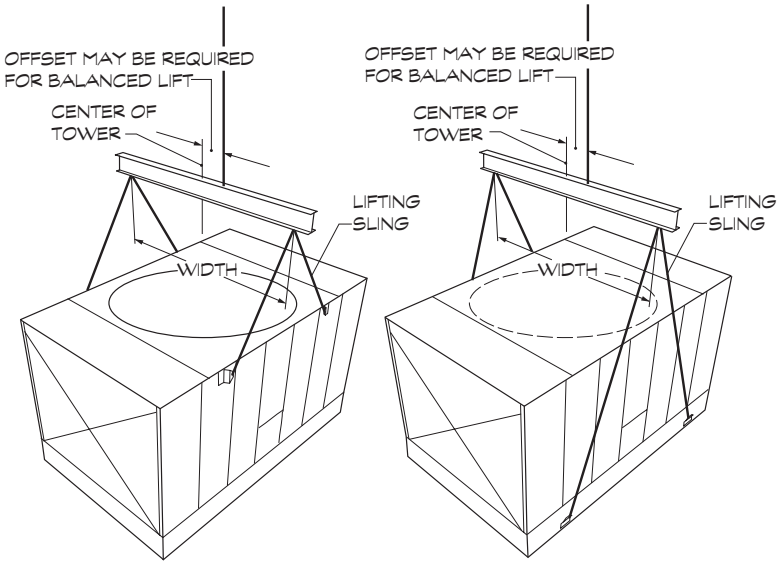

Model	Width	Minimum Sling Length
NC8301	6'-6"	5'-6"
NC8302-NC8303	8'-0"	7'-0"
NC8304	9'-0"	8'-6"
NC8305	11'-0"	8'-6"
NC8306	12'-0"	8'-6"
NC8307	12'-0"	10'-0"
NC8309	14'-0"	17'-6"
NC8310 Top	11'-0"	10'-0"
NC8310 Bottom	11'-0"	17'-6"
NC8311 Top	12'-0"	10'-0"
NC8311 Bottom	12'-0"	17'-6"
NC8312 Top	14'-0"	10'-0"
NC8312 Bottom	14'-0"	17'-6"

NOTE

- All hoisting clip holes are 1¼".
- On multicell tower installations, overall length of shackle pins should not exceed 5¼".
- For overhead lifts or where additional safety is required, add slings beneath the tower unit.

Marley

SPX **Cooling Technologies**

Balcke | Hamon Dry Cooling | Marley

7401 W 129 Street // Overland Park, KS USA 66213 // +1 913 664 7400 // spxcooling@ct.spx.com // **www.spxcooling.com**

In the interest of technological progress, all products are subject to design and/or material change without notice.
©2006 SPX Cooling Technologies, Inc. | Printed in USA

TECH NC 06A