APPENDIX 5A

System Impact Study

Stephen R. Taylor
Senior Energy Administrator
San Diego Gas & Electric Company
8316 Century Park Court, CP52A
San Diego, CA 92123
Tel: 858-654-8633
Fax: 858-654-1692
Staylor@SempraUtilities.com

November 1, 2005

Mr. Bob Burner
Duke Energy South Bay, LLC
5400 Westheimer Court
Houston, TX 77056-5310

Re: DESB Final System Impact Study Report Dated 10-28-05

Dear Mr. Burner:

Pursuant to the System Impact Study Agreement dated June 24, 2004 between Duke Energy South Bay, LLC ("DESB") and San Diego Gas & Electric Company ("SDG&E"), SDG&E provides the attached Final System Impact Study Report dated 10-28-05.

If you have any questions or comments, please contact me at 858-654-8633.

Sincerely,

(Original Signed)

Stephen R. Taylor
Senior Energy Administrator

Attachment: DESB Final System Impact Study Report Dated 10-28-05

cc: L. Brown
C. Diebold
J. Walsh (w/out attach)
J. Woldemariam
I. Green (CAISO)
J. Nickel (CAISO)

A Sempra Energy™ company

CONFIDENTIAL

"In accordance with the "Non-Disclosure and Use of Information Agreement" (the "Agreement") between SDG&E and the CAISO, the CAISO must cause each of its employees who will have access to this confidential information to acknowledge that they have read the Agreement and agree to abide by all of its terms regarding use and disclosure of this confidential information, and must cause such persons to execute Individual Agreements in the form attached as Attachment A to the "Agreement."

Project Developer
Duke Energy South Bay, LLC.

Project Name
Duke

FINAL
SYSTEM IMPACT STUDY REPORT

October 28, 2005

Study Performed for Duke
By San Diego Gas & Electric Company

TABLE OF CONTENTS

EXECUTIVE SUMMARY 3

INTRODUCTION AND OBJECTIVES 7

STUDY RESULTS AND PLAN OF SERVICE DEVELOPMENT 13

Power Flow Results 13
Short Circuit Results 14
Cost Estimates 14

BASE CASE ASSUMPTIONS AND DEVELOPMENT 17

STUDY ASSUMPTIONS 20

Appendix A – Definitions 22

Appendix B – Power Flow Analysis 24

Appendix C – Power Flow Plots 29

Appendix D – Short Circuit 60

Appendix E – Interconnection Application Queue 69

CAISO 70
SDG&E 76

Appendix F – Load and Resource Table 81

EXECUTIVE SUMMARY

PROJECT DESCRIPTION

Duke Energy South Bay, LLC. ("Duke") requested that San Diego Gas & Electric (SDG&E) perform a System Impact Study (the "Study") to interconnect its new Duke facility ("Project") located at 990 Bay Blvd, Chula Vista, California. The proposed project is a 650 MW project that will replace the existing South Bay generation facilities. The proposed Project would be located west of Interstate 5 and just south of the existing South Bay Power Plant. Duke's original application was received by the California Independent System Operator ("CAISO") and was accepted by SDG&E and CAISO with an effective date of February 29, 2004.

PROJECT IN-SERVICE DATE

Duke's application stated a proposed commercial operation date of January 2010. The anticipated testing date is August 2009. (See regulatory approval discussion on pages 7 & 8).

INTERCONNECTION POINT

Duke's application and subsequent communication stated their interconnection point and location of the interconnection would consist of three alternatives. However, subsequent to this System Impact Study development it was determined that alternatives 1 and 2 do not integrate with SDG&E's long term commitments as defined in the Memorandum of Understating (MOU) with the City of Chula Vista. Future study and work effort will reflect this determination.

The generator interconnections would be at 69, 138, and 230 kV. The 69 kV and 138 kV transmission currently exists in the area. The 230 kV tie would be provided via SDG&E's future 230 kV transmission scheduled for construction in 2007 and known as the Otay Mesa Power Purchase Agreement transmission line project. The alternatives are defined below but only alternative 3 will be considered further as explained in the paragraph above. These alternatives reflect physical construction options and the following conceptual topologies:

1. Utilization of the existing substation location for interconnection of the proposed facilities (without connecting to the proposed new 230 kV line).

2. Utilization of both the existing substation and a new substation located at the property south of the existing South Bay Power Plant (old LNG property). This new substation would provide a bus for interconnection to the proposed new 230 kV line.

3. Construction of a new substation and facilities to accommodate all interconnections required to provide electrical connection to the SDG&E transmission system on the property south of the existing South Bay Power Plant (old LNG property).

PROJECT CAPACITY

Duke's application stated an interconnection net capacity of 650 MW (nominal rating) to the interconnection point. The Project includes two 165 MW gas turbines and one 320 MW steam turbine for a total 650 MW of net generation capacity.

SYSTEM IMPACT STUDY DESCRIPTION

This Study constitutes a "System Impact Study" in accordance with the California Independent System Operator ("CAISO") Tariff and SDG&E's Transmission Owner Tariff ("TO Tariff").[1] CAISO will be responsible for approval of the final Study report provided to Duke and the recommended plan of service articulated in this report.

This Study includes power flow and short circuit studies and identifies a conceptual transmission plan of service. Cost estimates are not provided. Transient stability and post-transient voltage stability analyses have not been performed for this Study. These analyses will be included, as appropriate, in the Detailed Facility Study (DFS) if Duke wishes to proceed with further study.[2]

[1] Pursuant to FERC Order No. 2003 (Standardization of Generator Interconnection Agreements and Procedures, Fed. Reg. 49,846 August 19, 2003) regarding standardizing agreements and procedures for generator interconnection to electrical transmission systems, PTOs, including SDG&E, filed revised Transmission Owner Tariffs and a pro forma Large Generator Interconnection Agreement (LGIA). The California ISO filed revised Large Generator Interconnection Procedures (LGIP) and an LGIA pursuant to the ISO Tariff. On February 18, 2005, the ISO and PTOs filed a compliance LGIP and LGIA in order to account for the changes made by the Commission to its pro forma documents in the order on rehearing of Order No. 2003-A. FERC has not yet issued a decision regarding implementation of these changes.

[2] Duke may also choose to expedite the processing of its Interconnection Application by requesting Expedited Interconnection Procedures pursuant to SDG&E's TO Tariff section 10.11.

SYSTEM IMPACT STUDY CONCLUSIONS

To interconnect Duke to SDG&E's transmission system, a switchyard and a 230 kV transmission looped interconnection is required. Duke's proposed interconnection would use a 69 kV, 138 kV and 230 kV bus which would loop into SDG&E's proposed 230 kV line scheduled for construction in 2007. A final scope and design will be determined during the Detailed Facility Study. Thus cost estimates are not included in this System Impact Study report. These interconnecting facilities (the switchyard and necessary transmission construction associated with interconnections at the new substation) constitute Direct Assignment and Reliability upgrades per the CAISO tariff.

Under Category B (single contingency) simulations, the power flow analysis identified the following upgrade requirement:

- The Sycamore to Carlton Hill tap 138 kV transmission line

These "Delivery Upgrades" are required only upon construction and operation of the Enpex generating facility, which is proposed to connect directly to the Sycamore Canyon 230 kV bus. Enpex filed an Interconnection Application (documented in the SDG&E interconnection queue) that pre-dates the Duke Energy's Interconnection Application (documented in the CAISO interconnection queue). The Enpex project maintains a higher position in the interconnection queue. Consistent with the underlying assumptions of this SIS, if Enpex fails to construct there could be additional Delivery Upgrades associated with the Duke request.

These results are subject to the assumptions known at the time of this System Impact Study report. The use of the terms "Reliability Upgrades," "Direct Assignment Facilities," and "Delivery Upgrades" in this report are intended to be consistent with the definitions and uses of those terms in the ISO tariff. Refer to Appendix A - Definitions for an explanation of terms.

Pursuant to SDG&E's in-effect Transmission Owner Tariff and applicable CAISO tariff provisions, Duke will be responsible for absorbing the costs of the "Direct Assignment Facilities." Should SDG&E build these facilities on behalf of Duke, Duke will be required to reimburse SDG&E for all costs that SDG&E incurs.

Duke must advance funds to SDG&E for the construction of the facilities described as Reliability Upgrades. SDG&E will build the improvements and, upon commercial operation of the Duke Project, reimburse Duke for the funds advanced.

Duke may elect to advance funds to SDG&E for the construction of the facility improvements described as Delivery Upgrades, in which case SDG&E will build the improvements and, upon commercial operation of the Duke Project,

reimburse Duke for the funds advanced. If Duke elects not to advance the construction funds to SDG&E, SDG&E is under no obligation to construct the improvements. Assuming the improvements are not built, Duke's exposure to dispatch constraints required pursuant to CAISO congestion management and grid operation protocols may be at a level that is unacceptable to Duke. Construction of the identified improvements will reduce the frequency and magnitude of such dispatch constraints.

The parties acknowledge the contemplated improvements to interconnect into the 230 kV circuit is contingent upon SDG&E constructing the new 230 kV transmission line associated with the OMPPA project.

Because there are an infinite number of possible system conditions that could be studied, the Study results should be considered valid only for the indicated Study assumptions. It is Duke's responsibility to assess whether the benefits to Duke of constructing the identified Delivery Upgrades are sufficient to offset the cost of, and risks associated with, advancing construction funds to SDG&E.

In the event Duke elects not to advance construction funds to SDG&E, Duke may nevertheless seek to have SDG&E construct the upgrade through use of the CAISO's Alternative Dispute Resolution (ADR) procedure as set forth in Section 3.2.1.1.3 of the CAISO Tariff.

The Short Circuit analysis identified no overstressed breakers requiring upgrades due to the Duke interconnection

Should Duke choose to proceed with their Project, a Detailed Facility Study (DFS) will need to be completed prior to interconnection unless Duke chooses Expedited Interconnection Procedures pursuant to SDG&E TO Tariff Section 10.11.[3] A DFS will determine a final transmission interconnection plan of service, budget class cost estimates and project lead-time requirements.

The tables and study results presented in this report are preliminary and non-binding, and are subject to revision as additional information, studies and more detailed designs are performed. A DFS or an Expedited Service Agreement (ESA) would need to be executed prior to an interconnection. The DFS would also provide more accurate design parameters for construction of the required facilities, budget class cost estimates, and project lead-time requirements. Therefore, the DFS conclusions and table of results may vary from the SIS results provided in this report.

[3] Even if expedited Interconnection Procedures were elected by Duke, additional technical studies such as transient stability analysis may be required by the CAISO).

INTRODUCTION AND OBJECTIVES

Pursuant to Duke's interconnection application and request, SDG&E conducted a System Impact Study to interconnect a combined cycle generation station that consists of two 165 MW (net output) Gas Turbines (GT) and a 320 MW (net output) single Steam Turbine. The project proposal is that the generating station and interconnection facilities will be in the vicinity of the existing plant and will require the integrity of the sub-transmission (69 kV and 138 kV) be maintained. Duke has proposed that each 165 MW gas turbine be interconnected at the existing 69 kV and 138 kV voltages. Thus one GT will be interconnected at 69 kV and one GT will be interconnected at 138 kV using the existing or equivalent switchyard. In addition they propose that the steam turbine be interconnected to a new 230 kV switchyard at or near the proposed generating facility. The Study analyzes the interconnection of the Project, using the proposed configuration, with a maximum net output of 650 MW to the SDG&E transmission system. Refer to Figure 1: Duke Project Vicinity Map and Figure 2: Duke Project Interconnection Conceptual for interconnection details.

A 2010 Heavy Summer scenario was modeled for the Study based on the case used by SDG&E for its own internal transmission expansion studies. The power flow case developed by SDG&E for its capital budget expansion plan development is being used as the pre-project case to compare a completed Study without the Project, to the Study with the Project added. A complete set of projects needed by SDG&E due to its internal system load growth had been established in the Stakeholder process. This provided a benchmark upon which to perform these generation interconnection studies. Also, generators that have Interconnection Queue positions ahead of Duke Energy's request are considered and modeled as necessary. Duke Energy and SDG&E jointly agreed not to model SDG&E's proposed future 500 kV transmission line.

Due to the uncertainty of the scope and design of the interconnection facilities at this time costs have not been developed within this Study. Costs associated with Duke Energy's interconnection will be developed in the Detailed Facilities Study.

The length of time required for environmental and permitting processes for new transmission or transmission upgrades is uncertain. It depends on many factors, including whether exemption(s) can be obtained from the California Public Utilities Commission for the G.O. 131-D Certificate of Public Convenience and Necessity (CPCN) process or the Permit to Construct (PTC) process. The outcome of these processes could increase cost, as well as delay the transmission facilities in-service date that would be required for testing and startup to support Duke's proposed commercial operation date of January 2010.

SDG&E believes that the ability to obtain exemptions from the CPCN and PTC processes (in which case an advice letter filing with the CPUC should be sufficient for obtaining the CPUC's approval to proceed with construction) will be enhanced if Duke includes in its application to the CEC the full scope of transmission and substation additions and upgrades that will be part of the project.

Duke should also be aware that once the necessary environmental review and permits are obtained, lead time will be required for SDG&E to procure and construct the interconnection facilities. At this time, SDG&E expects that the procurement and construction period for these upgrades will be from two to three years from construction start date. These construction lead times will be refined once the final plan of service is identified pursuant to the results of the Detailed Facility Study and execution of an Interconnection Agreement. The installation of these facilities is contingent on obtaining binding commitments for the land and easements necessary for SDG&E to construct and maintain the new equipment. For the switchyard as described above, SDG&E would typically require a 560 foot x 890 foot parcel that (1) has adequate access for transmission facilities, construction and maintenance., and (2) does not have environmental constraints which would prevent or delay construction. SDG&E is working with Duke Energy to accommodate future substation facilities within the property proposed in this System Impact Study and will continue to work with Duke as design and scope becomes finalized during the DFS phase. Any delay in obtaining these commitments, however, may delay construction of the transmission and substation facilities and ultimately cause the subsequent commercial operations date to be delayed.

The Direct Assignment Facility requirements in the preliminary transmission Plan of Service were developed on the basis that the full interconnection capacity requested by Duke can be delivered to the first point of interconnection under normal operating conditions. However, even with Direct Assignment Facilities and Reliability Upgrades there could be additional transmission congestion limits that would require the CAISO to constrain dispatch on the proposed generator(s). SDG&E has attempted to identify suitable mitigation measures in the Delivery Upgrades. Multiple dispatch sensitivities are documented in this report that that may have an impact on the potential congestion. In reviewing the load flow sections of the appendices the case designated as Alt 8 is the requisite case scenario for determination of upgrade requirements per the interconnection queue.

Figure 1 shows the corridor in which SDG&E's proposes to construct the 230 kV transmission line as part of SDG&E's Otay Mesa Power Purchase Agreement. The Duke proposal would loop the steam turbine into this line at the location described.

Figures 2 and 3 illustrate a schematic representation of the existing system and the pre-project transmission anticipated in the area of the Duke proposal. Figure 2 shows the existing 69 kV and 138 kV lines within the corridor illustrated in Figure 1. Figure 2 also indicates as dashed lines, SDG&E's plan to remove tielines 13813 and 13814, in 2008.

Figure 3 illustrates the transmission corridor configuration prior to construction of the Duke repower proposal and shows the addition of the 230 kV line and the original three alternatives for the Duke interconnection.

Subsequent to the development of this System Impact Study alternatives 1 and 2, (those that would utilize the existing substation property), were determined to be inconsistent with SDG&E's long-term plan. This long-term plan will require the removal of this substation.

SDG&E has a commitment to remove and relocate the existing 69 kV and 138 kV facilities at the existing substation location. In the event that Duke Energy moves forward with the repower project, SDG&E will integrate its commitment to relocate the existing facilities and its requirement to interconnect the Duke project.

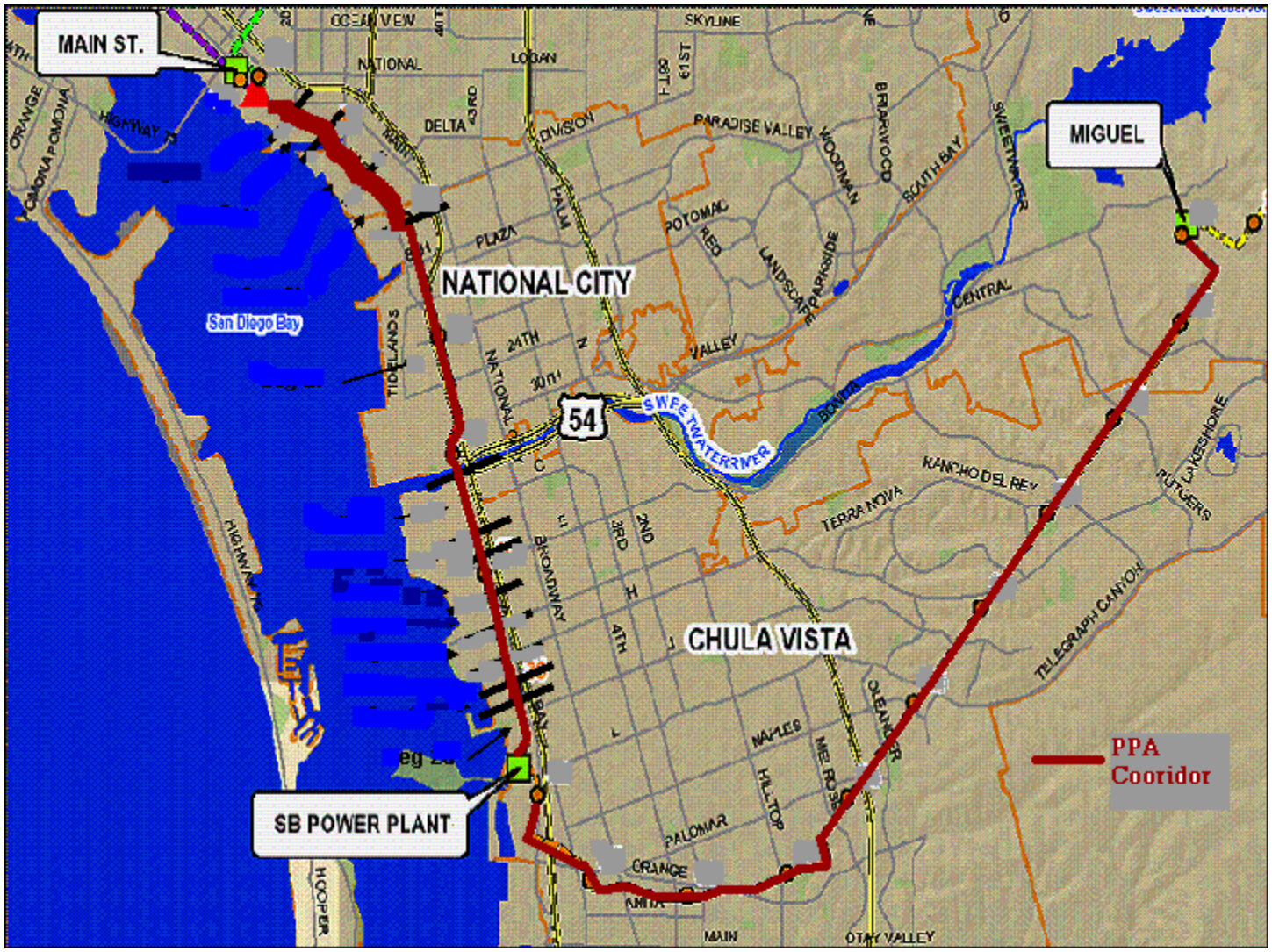

Figure 1: Duke Project Vicinity Map

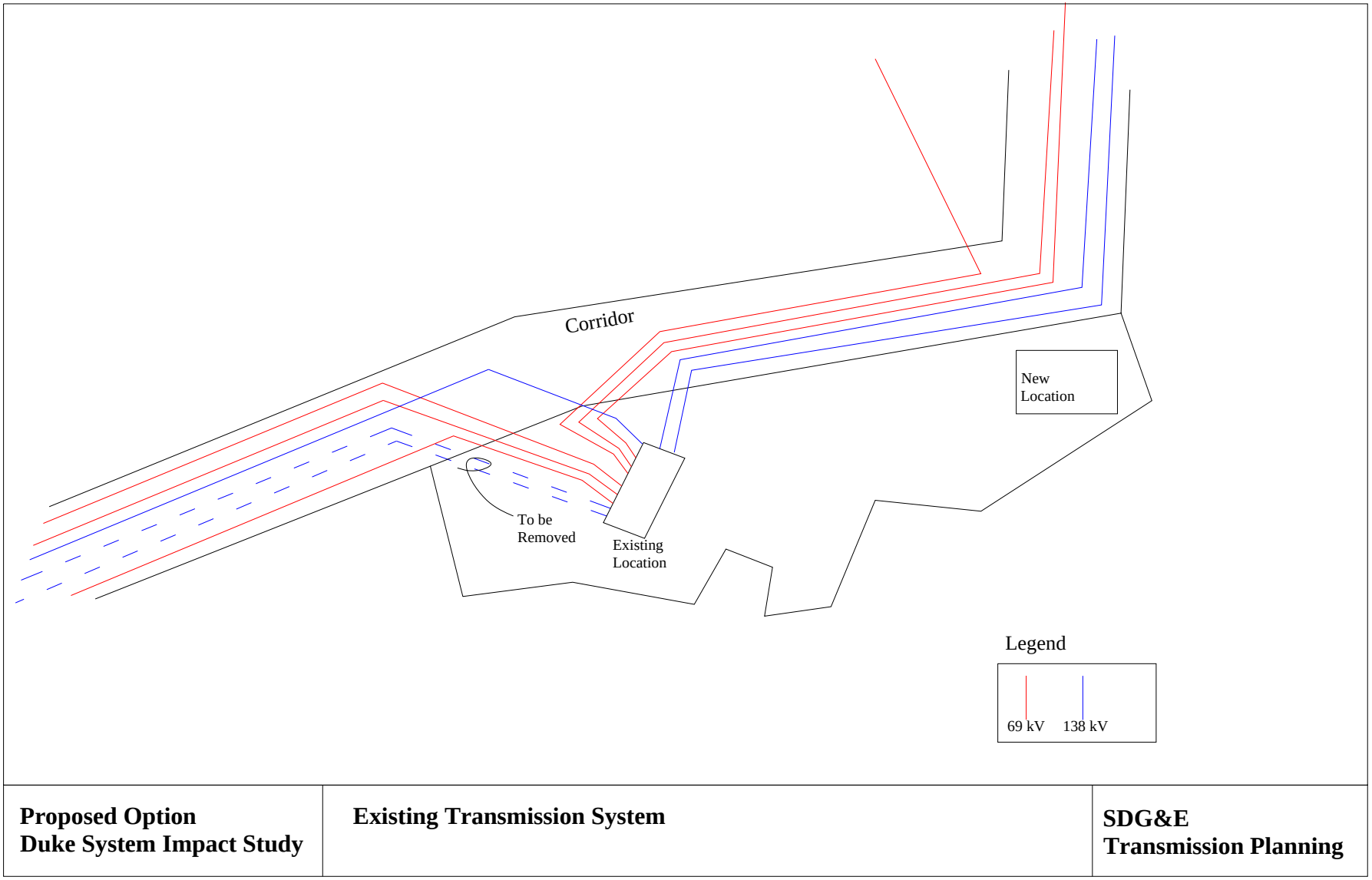

Proposed Option **Duke System Impact Study**	**Existing Transmission System**	**SDG&E** **Transmission Planning**

Figure 2: Duke Project Interconnection Conceptual

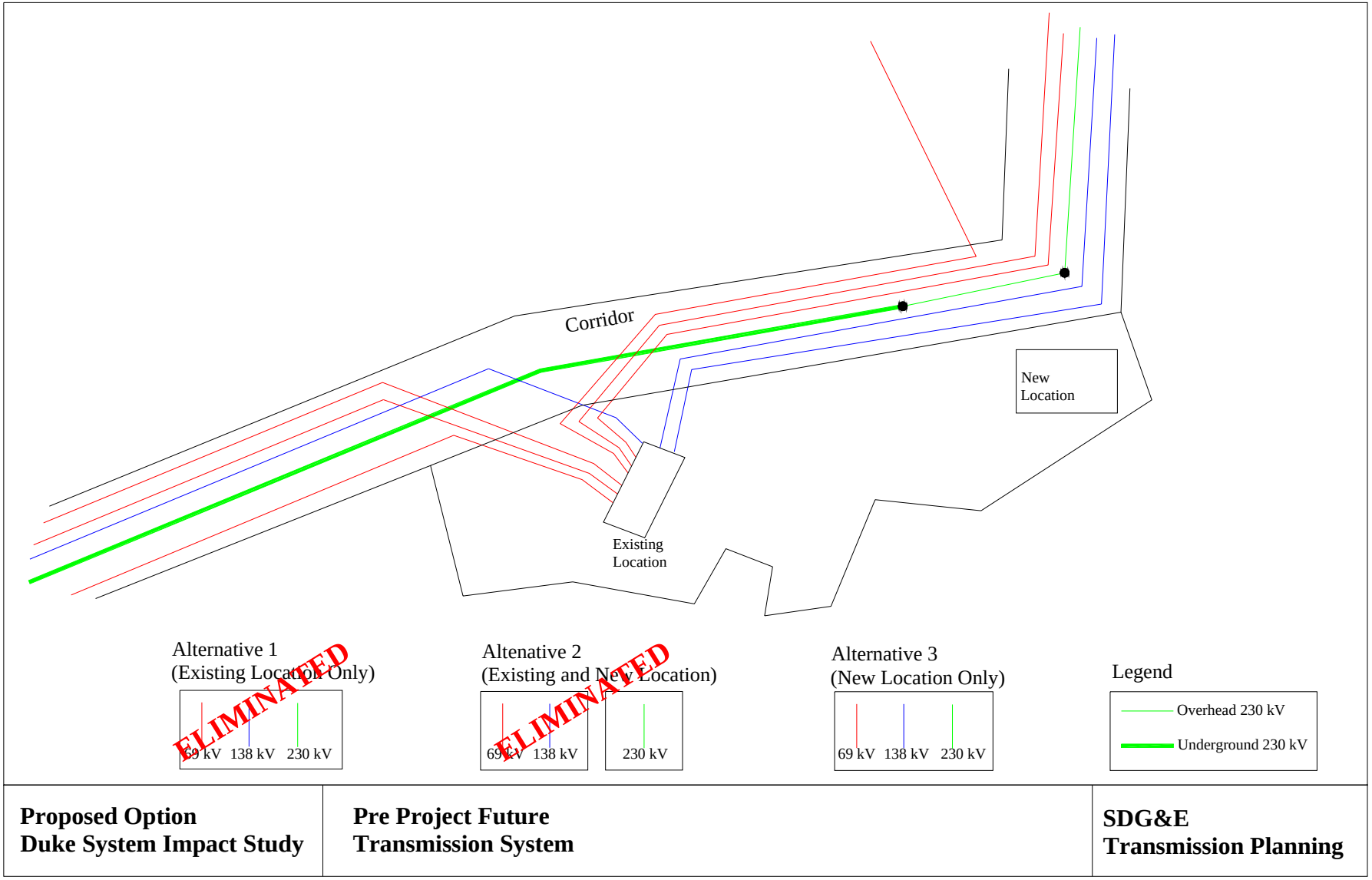

Proposed Option **Duke System Impact Study**	**Pre Project Future** **Transmission System**	**SDG&E** **Transmission Planning**

Figure 3 Pre Project Future Transmission System
Alternatives 1 and 2 have been eliminated due to future land use issues.

STUDY RESULTS AND PLAN OF SERVICE DEVELOPMENT

The complete Power flow analysis results have been provided in Appendix B – Power Flow Analysis and Appendix C – Power Flow Plots to show the anticipated flows on affected SDG&E transmission lines for NERC Category A, Category B and selected Category C and D conditions. Refer to Appendix A – Definitions for an explanation of terms.

The cases that were developed simulate the SDG&E system with all planned transmission elements in-service for 2010. These cases include high import with heavy system load.

Power Flow Results

There were no Category A overloads identified with the addition of the Duke Project. Additional overloads may be identified in the Detailed Facility Study if other generation in the queue ahead of the Duke Project doesn't come to fruition.

Under Category B (single contingency) simulations, the power flow analysis identified the possible requirement to upgrade the Sycamore to Carlton Hill tap 138 kV transmission line.

This overload is denoted in Appendix B – Power Flow Analysis and Appendix C – Power Flow Plots. Alternative 8 is the relevant case used in determining the upgrade requirements per the CAISO tariff. It should be noted that a number of sensitivities to dispatch are included in the appendices on an informational basis.

These "Delivery Upgrades" are required upon construction and operation of the Enpex generating facility, which is modeled connected directly to the Sycamore Canyon 230 kV bus. Enpex filed an Interconnection Application to the SDG&E interconnection queue that pre-dates the Duke Interconnection Application to the CAISO interconnection queue. It is assumed in this study that Enpex's application is still active and maintains a higher position in the interconnection queue. If Enpex fails to construct or is removed from its current queue position, additional Delivery Upgrades may still be identified during the Detailed Facility Study associated with the Duke request. These results are subject to the assumptions known at the time of this System Impact Study report. The use of the terms "Reliability Upgrades," "Direct Assignment Facilities," and "Delivery Upgrades" in this report are intended to be consistent with the definitions and uses of those terms in the ISO tariff.

There are multiple Category C overloads identified in both the pre-case and post-case contingency runs. These overloads are highlighted in Appendix B – Power Flow Analysis and Appendix C – Power Flow Plots.

Table 1 summarizes the overloads identified in the power flow analysis due to the interconnection of the Project. This overload only occurs in the post-case with the Enpex projected dispatched at 500 MW. With Enpex dispatch at 750 MW this overload is seen in both the pre-case and post-case and therefore would not be the responsibility of Duke to upgrade.

Table 1: Overloads Due to Project[4]

Contingency Condition	Outage	Overload	% Overload
Category A - Base Case	none	none	
Category B - Single Contingency	EPP/Escondido 230 kV line	Sycamore Canyon to Carlton Hills Tap	1
Category C & D Contingencies	N/A	N/A	

Short Circuit Results

No overstressed breakers have been identified as a result of the Duke interconnection. Complete results are shown in Appendix D – Short Circuit Plots.

Cost Estimates

No cost estimates have been developed at this time.

According to current CAISO tariff filings, Duke is not obligated to sponsor the facility improvements described as Delivery Upgrades, and SDG&E is not obligated to build these upgrades. However, Duke will be subject to any dispatch constraints that may be required according to CAISO congestion management protocols. If Duke wants to minimize exposure to such dispatch constraints, Duke must send a request to SDG&E to construct these system upgrades according to Section 3.2.1.1.3 of the CAISO Tariff. If the upgrades require the advancement of transmission projects that would still be needed without the proposed generation, as part of SDG&E's plan to reliably serve

[4] These overloads are the result of full dispatch of South Bay and Enpex at 500 MW. Dispatch of Enpex to 750 MW result in pre-case overloads of the identified facilities. Additional overloads due to this project may be identified during the Detailed Facilities Study depending on system conditions and other generation projects.

customer loads, Duke would only be responsible for the cost of advancing a project's in-service date to meet Duke's needs. Table 2 provides a breakdown of the cost categories applicable to the current impact assessment.

Table 2: Category Assignment of Future Upgrades[#]

Facility	Direct Assignment Facilities	Reliability Upgrades	Delivery Upgrades
Duke Switchyard (New Facility Owner)	x		-
Duke Switchyard[5] (Participating Transmission Owner)	-	x	-
Loop-in 230 kV line	-	x	-
Reconductor of Sycamore Canyon to Carlton Hills tap 138 kV line	-		x

Subsequent to this System Impact Study development it was determined that alternative's 1 and 2 do not integrate with SDG&E's long term commitments as defined in the Memorandum of Understating (MOU) with the City of Chula Vista. The Memorandum of Understanding between the City of Chula Vista and SDG&E calls for SDG&E to relocate the switchyard.

At this time the details of the interconnection design are not developed. In addition the determination that alternatives 1 and 2 are not feasible with SDG&E's long term plans has limited the consideration to alternative 3. It is anticipated that Duke would only be responsible for those costs associated with meeting their interconnection requirements. The details of the ultimate design and cost responsibilities are deferred to the Detailed Facilities Study and will be developed in consultation between Duke South Bay and SDG&E. Any additional interconnection alternatives can be considered at that time.

SDG&E has a commitment to remove and relocate the existing 69 kV and 138 kV facilities at the existing substation location. In the event that Duke Energy moves forward with the replacement project, SDG&E will integrate its commitment to relocate the existing facilities and its requirement to interconnect the Duke project.

[5] Assumes that the switchyard will be a loop type topology i.e. a breaker and a half or double breaker scheme. Only those facilities associated with the Duke interconnection are to be funded by Duke.
[#] Additional costs may be identified in the Detailed Facility Study as a result of other generation in the queue not coming to fruition.

BASE CASE ASSUMPTIONS AND DEVELOPMENT

Power Flow Database

1. Pre-Project

The pre-Project case (benchmark case) was based on the 2010 Heavy Summer power flow case used by SDG&E for its own internal system planning studies. This case was used during the CAISO Stakeholder process in 2004 and includes the projects needed within the SDG&E system to accommodate the projected load growth and meet regional grid reliability standards. This case - which did not include the proposed Project, was used as a benchmark case for this Study[6].

The heavy summer benchmark case simulates a condition with 5038 MW of load including losses, 2800 MW of simultaneous import, and approximately 2230 MW of on-system generation dispatched. Internal generation was dispatched according to the SDG&E Dispatch table, which uses the CAISO Reliability Must-Run (RMR) dispatch protocol as a guideline. Adjustments to other generator's dispatch and simultaneous import were made as required to accommodate the various post cases and post case sensitivities. Refer to Appendix F – Load and Resource Table, for more details.

This benchmark case assumes specific improvements to the SDG&E transmission system including the construction of the Otay Mesa Power Purchase Agreement Transmission Project, implementation of the transmission system modifications as described in the MOU between SDG&E and the City of Chula Vista. It does not include the planned new 500 kV interconnection into SDG&E.

2. Post-Project

From the pre-Project case, a case was developed to simulate the addition of the 650 MW Duke Project. Adjustments to other generator's dispatch and simultaneous import were made as required to accommodate the various post cases and post case sensitivities. These are documented in Table X in the appendix. The assignment of upgrades categories and cost responsibilities will be based on the Interconnection Application Queue. Refer to Appendix B – Power Flow Analysis and Appendix C – Power Flow Plots for the results of these studies.

[6] The General Electric Positive Sequence Load Flow (GE PSLF) model, version 13.4 and version 14.2, were used in the performance of the study.

Short Circuit Database

SDG&E policy, for 230 kV class stations and lower, is to allow breakers at transmission (non-generator) substations to be utilized for fault interruption to 115 % of their nameplate interrupting rating and breakers at generator substations to be utilized for fault interruption to 100 % of their nameplate interrupting rating.

1. Pre-Project

The database for determining if any overstressed breakers exist pre-Project included all generation in the queue in SDG&E's service territory that have applications predating the proposed Duke project[7].

2. Post-Project

From the pre-Project case, a case was developed to include the Duke addition. In addition two sensitivities were developed with transformation from the 230 kV bus.

[7] ASPEN Version 9.0 was used to perform the Short Circuit Analysis.

STUDY ASSUMPTIONS

The following assumptions have been used during the course of this Study. The Study results, recommendation, and cost estimates may vary if these assumptions are changed.

1. Unless specifically known, typical data for generators and associated system upgrades such as lines, transformers, etc. were used for setting up the power flow base cases and the short circuit database.

2. A proposed commercial operation date of 2010 was assumed, as indicated in Duke's Interconnection Application.

3. SDG&E has financed substantial portions of its transmission and distribution systems with proceeds from industrial development bonds (IDB) issued by the City of San Diego and the City of Chula Vista. Interest on these bonds is tax-exempt. Pursuant to IRS requirements, if the proposed Project would cause impairment of these bonds, Duke would need to mitigate the resulting costs to SDG&E. This issue has not been addressed as part of this System Impact Study.

4. Any potential overloads or voltage problems, which exist in the pre-Project case, but have not been significantly aggravated by the generation interconnection, have been ignored for the purpose of this System Impact Study.

5. Impacts of other proposed transmission or generation pertaining to interconnection studies have not been investigated in the power flow study. However, generators in the queue in SDG&E's service territory (as of March 14, 2005, positions 1 through 20 likely to be in-service by Duke's commercial operation date) were modeled in the power flow. The CAISO Interconnection Application Queue is shown in Appendix E – Interconnection Application Queue.

6. All prior generators in the queue in SDG&E's service territory (as of March 14, 2005, positions 1 through 20) were modeled for the short circuit analysis.

7. The Duke Project must meet SDG&E technical standards.

8. The SDG&E document entitled, “Technical Standards for Load and Non-SDG&E Owned Generator Interconnections” located on the SDG&E web site provides additional information about the SDG&E technical standards.

9. The tables and study results presented in this report are preliminary and non-binding, and are subject to revision as additional information, studies and more detailed designs are performed. A DFS or an Expedited Service Agreement (ESA) would need to be executed prior to an interconnection. The DFS would also provide more accurate design parameters for construction of the required facilities, budget class cost estimates, and project lead-time requirements. Therefore, the DFS conclusions and table of results may vary from the SIS results provided in this report.

Appendix A – Definitions

Category A Contingency	All facilities in service, no contingency.
Category B Contingency	Event resulting in the loss of a single element.
Category C Contingency	Event resulting in the loss of two or more (multiple) elements.
Category D Contingency	Extreme event resulting in two or more (multiple) elements removed or cascading out of service.
Delivery Upgrade	The transmission facilities, other than Direct Assignment Facilities and Reliability Upgrades, necessary to relieve Constraints on the ISO Controlled Grid and to ensure the delivery of energy from a New Facility to load.
Direct Assignment Facility	The transmission facilities necessary to physically and electrically interconnect a New Facility Operator to the ISO Controlled Grid at the point of interconnection.
Reliability Upgrade	The transmission facilities, other than Direct Assignment Facilities, beyond the first point of interconnection necessary to interconnect a New Facility safely and reliably to the ISO Controlled Grid, which would not have been necessary but for the interconnection of a New Facility, including network upgrades necessary to remedy short circuit or stability problems resulting from the interconnection of a New Facility to the ISO Controlled Grid. Reliability Upgrades also include, consistent with WECC practice, the facilities necessary to mitigate any adverse impact a New Facility's interconnection may have on a path's WECC path rating.

Appendix B – Power Flow Analysis

The case names can be coordinated with the Load and Resource table in Appendix F. Alternative 8 is the relevant scenario for the determination of upgrade requirements. The other scenarios are sensitivities to various dispatch alternatives.

CATEGORY A – BASE CASE OVERLOADS (ALL FACILITIES IN SERVICE)

The case names can be coordinated with the Load and Resource table in Appendix F. Alternative 8 is the relevant scenario for the determination of upgrade requirements

Monitored Element	**Contingency Description**	**MVA1**	Pos_ alt1	Post_ alt2	Post_ alt3	Post_ alt4	Post_ alt6	Post_ alt7	Post_ alt8	Post_ case	Post_ case_ sen2	Pre_ alt1	Pre_ alt1_ sen1	Pre_ alt2	Pre_ alt3	Pre_ alt4	Pre_ alt5	Pre_ alt6	Pre_ alt7	Pre_ alt8	Pre_ case	Pre _ case_ sen2	Pre _ case_ sen2
TRAN SOUTHBY3 18kV-SOUTHBAY 230kV ck1	Base system (n-0)	320	1.005	1.008	1.006	1.004	1.005	1.006	1.006	1.012	1.011												
TRAN SOUTHBY 69kV-SOUTHBAY 138kV ck1	Base system (n-0)	140										1.139	1.002		1.107	1.122	1.012	1.005			1.008	1.002	1.097
TRAN SYCAMORE 230kV-SYCAMORE 69kV ck2	Base system (n-0)	224					1.000																
TRAN SYCAMORE 230kV-SYCAMORE 69kV ck1	Base system (n-0)	224					1.000																
TRAN SOUTHBY2 15kV-SOUTHBAY 138kV ck1	Base system (n-0)	150										1.001		1.001							1.005	1.003	1.004

CATEGORY B – SINGLE ELEMENT CONTINGENCIES

The case names can be coordinated with the Load and Resource table in Appendix F. Alternative 8 is the relevant scenario for the determination of upgrade requirements

MVA2 pu Loading			CaseName																					
Monitored Element	Contingency Description	MVA2	post_alt1	post_alt2	post_alt3	post_alt4	post_alt6	post_alt7	post_alt8	post_case	post_case_sen2	pre_alt1	pre_alt1_sen1	pre_alt2	pre_alt3	pre_alt4	pre_alt5	pre_alt6	pre_alt7	pre_alt8	pre_case	pre_case_sen1	pre_case_sen2	Comments
TRAN SOUTHBAY 69kV-SOUTHBAY 138kV ck1	DIVISION - NAVSTMTR 1 69kV	164										1.041			1.029	1.031					1.013		1.014	Pre Existing Condition
	OTAYRNCH - BORDER 1 69kV	164										1.008												
	OTAYRNCH - MIGUEL 1 69kV	164										1.045			1.017	1.031					1.002		1.011	
	MIGUEL - MIGUEL 1 230/69kV	164										1.102			1.072	1.087					1.06		1.063	
	MIGUEL - MIGUEL 2 230/69kV	164										1.102			1.072	1.087					1.06		1.063	
	LOSCOCHS - SOUTHBAY 1 138kV	164										1.114			1.087	1.096					1.077		1.084	
	MISSION - UPTOWN 1 138kV	164										1.27	1.064	1.162	1.241	1.267	1.098	1.108	1.093	1.091	1.254	1.119	1.254	
	OTAYMESA - MLMS3TAP 1 230kV	164										1.014			1.027	1.028					1.017		1.023	
	SOUTHBY1 1 15.0kV	164										1.231	1.116	1.102	1.204	1.215	1.122	1.117	1.109	1.105	1.193	1.119	1.198	
	SILVERGT - MLMS3TAP 1 230kV	164										1.014			1.027	1.029					1.017		1.024	
	UPTOWN - SOUTHBAY 1 138kV	164										1.336	1.13	1.228	1.307	1.333	1.164	1.173	1.158	1.157	1.32	1.185	1.32	
	SILVERGT - MAIN ST 1 69/230kV	164										1.063			1.041	1.051					1.026		1.032	
	SILVERGT - MAIN ST 2 69/230kV	164										1.063			1.041	1.051					1.026		1.032	
	OLD TOWN - OLD TOWN 1 230/69kV	164										1.007												
	OLD TOWN - OLD TOWN 2 230/69kV	164										1.007												
LINE IMPRLVLY 230kV-ROA-230 230kV ck1	IMPRLVLY - MIGUEL 1 500kV	850	1.052									1.08	1.086	1.01							1.021	1.023	1.012	Existing SPS
TRAN ESCNDO50 138kV-ESCNDIDO 69kV ck2	CALAVRTP - CANNON 1 138kV	73	1.015	1.013	1.012	1.014	1.013	1.013	1.013	1.011	1.012	1.018	1.018	1.017	1.015	1.015	1.015	1.015	1.015	1.015	1.015	1.016	1.016	Pre Existing Condition
LINE OTAY 69kV-OTAYLKTP 69kV ck1	IMPRLBCH - OTAY TP 1 69kV	50.3	1.05		1.068	1.044	1.035	1.045	1.046	1.06	1.039	1.064	1.03		1.065	1.063	1.035	1.027	1.038	1.039	1.075	1.052	1.054	Pre Existing Condition
	OTAYRNCH - BORDER 1 69kV	50.3	1.016		1.016	1.013	1.015	1.015	1.015	1.023	1.021													
	OTAYRNCH - MIGUEL 1 69kV	50.3	1.396		1.396	1.392	1.394	1.395	1.396	1.407	1.404	1.347	1.347		1.346	1.345	1.345	1.346	1.346	1.347	1.353	1.351	1.351	
LINE BLDCRKTP 69kV-DESCANSO 69kV ck1	LOVELAND - BARRETTP 1 69kV	32.3								1.011	1.007													Marginal Condition
LINE BLDCRKTP 69kV-SANTYSBL 69kV ck1	LOVELAND - BARRETTP 1 69kV	32.3								1.01	1.006													
LINE ESCNDIDO 69kV-FELCTATP 69kV ck1	ESCNDIDO - ASH 1 69kV	102.1	1.02		1.01					1.026	1.009		1.007											
	ESCNDIDO - FELICITA 1 69kV	102.1	1.003							1.005														
TRAN LOSCOCHS 69kV-LOSCOCHS 138kV ck2	LOSCOCHS - LOSCOCHS 1 69/138kV	155										1.014			1.015	1.02								
TRAN MIGUEL 230kV-MIGUELMP 500kV ck1	MIGUEL - MIGUEL 2 500/230kV	1329	1.001	1.012						1.025	1.015										1.002	1.008		
TRAN MIGUEL 500kV-MIGUELMP 500kV ck1	MIGUEL - MIGUEL 2 500/230kV	1329	1.011	1.023						1.037	1.027										1.01	1.015	1.001	Existing SPS
TRAN MIGUEL 230kV-MIGUEL 500kV ck2	MIGUEL - MIGUELMP 1 500/230kV	1329	1.002	1.014						1.028	1.017										1.001	1.006		
	MIGUEL - MIGUELMP 1 500/500kV	1329	1.002	1.014						1.028	1.017										1.001	1.006		
TRAN PENSQTOS 230kV-PENSQTOS 69kV ck2	PENSQTOS - PENSQTOS 1 69/230kV	269								1.06											1.02			
TRAN SANLUSRY 69kV-SANLUSRY 230kV ck2	SANLUSRY - SANLUSRY 1 230/69kV	301								1.053											1.03			
TRAN SANLUSRY 69kV-SANLUSRY 230kV ck1	SANLUSRY - SANLUSRY 2 230/69kV	301								1.067											1.044	1.009		
LINE POWAY 69kV-POMERADO 69kV ck1	EPP - ESCNDIDO 1 230kV	136.8				1.106	1.192	1.137	1.147							1.101	1.081	1.164	1.112	1.121				Future Project to 160 MVA
LINE SILVERGT 230kV-OLDTWNTP 230kV ck2	SILVERGT - OLD TOWN 1 230kV	481							1.039															580 MVA Emergency Rating
LINE SILVERGT 230kV-OLD TOWN 230kV ck1	SILVERGT - OLDTWNTP 2 230kV	481							1.045															580 MVA Emergency Rating
TRAN SYCAMORE 230kV-SYCAMORE 69kV ck2	EPP - ESCNDIDO 1 230kV	285					1.065	1.009	1.018									1.023						
	SYCAMORE - SYCAMORE 1 69/230kV	285				1.036	1.122	1.067	1.077									1.078	1.019	1.028				
TRAN SYCAMORE 230kV-SYCAMORE 69kV ck1	EPP - ESCNDIDO 1 230kV	285					1.065	1.009	1.018									1.023						
	SYCAMORE - SYCAMORE 2 69/230kV	285				1.036	1.122	1.067	1.077									1.078	1.019	1.028				
LINE SYCAMORE 138kV-CARLTHTP 138kV ck1	EPP - ESCNDIDO 1 230kV	248				1.022	1.097	1.008	1.005															
	SILVERGT - SOUTHBAY 1 230kV	248				1.03	1.089	1.053	1.061															
	SYCAMORE - CHCARITA 1 138kV	248					1.047																	
LINE SYCAMORE 138kV-CHCARITA 138kV ck1	EPP - ESCNDIDO 1 230kV	204.1					1.205	1.082	1.152	1.086								1.107		1.028	1.06			Pre Existing Condition
	CARLTHTP - SANTEE 1 138kV	204.1					1.118		1.06	1.002								1.009						
	SILVERGT - SOUTHBAY 1 230kV	204.1					1.077		1.069	1.074														
	OTAYMESA - MLMS3TAP 1 230kV	204.1					1.003														1.001			
	SOUTHBAY - MLMS3TAP 1 230kV	204.1					1.003																	
	FRIARS - MISSION 1 138kV	204.1					1.137	1.018	1.105	1.145								1.049			1.152			
	DOUBLET - DOUBLTTP 1 138kV	204.1					1.103		1.071	1.11								1.015			1.117			
	SILVERGT - MLMS3TAP 1 230kV	204.1																			1.001			
LINE DOUBLTTP 138kV-PENSQTOS 138kV ck1	PENSQTOS - PENSQTOS 1 69/230kV	265																			1.022			
	PENSQTOS - PENSQTOS 2 69/230kV	265																			1.027			
	SYCAMORE - CHCARITA 1 138kV	265								1.097											1.161			
	MDWLRKTP - NCMETRTP 1 138kV	265																			1.043			
LINE DOUBLTTP 138kV-FRIARS 138kV ck1	SYCAMORE - CHCARITA 1 138kV	300																			1.026			
LINE FRIARS 138kV-MISSION 138kV ck1	PENSQTOS - PENSQTOS 1 69/230kV	300																			1.002			
	PENSQTOS - PENSQTOS 2 69/230kV	300																			1.006			
	SYCAMORE - CHCARITA 1 138kV	300								1.069											1.124			
	MDWLRKTP - NCMETRTP 1 138kV	300																			1.019			
LINE LOSCOCHS 69kV-GRANITTP 69kV ck1	EL CAJON - GRANITE 1 69kV	102.1									1.08												1.058	
LINE EL CAJON 69kV-LOSCOCHS 69kV ck1	EL CAJON - JAMACHA 1 69kV	55.1																					1.02	
LINE LOSCOCHS 138kV-SOUTHBAY 138kV ck1	MISSION - UPTOWN 1 138kV	204.1												1.05							1.053		1.034	
	UPTOWN - SOUTHBAY 1 138kV	204.1										1.056		1.11	1.053	1.048					1.114		1.095	

C and D Category	not run for all sensitivities																
			Case Name with MVA2 pu Loading														
Monitored Element	**Contingency Description**	MVA2	post_alt1	post_alt2	post_alt3	post_alt4	post_alt6	post_alt8	pre_alt1	pre_alt2	pre_alt3	pre_alt4	pre_alt5	pre_alt6	pre_alt8	**Comments**
LINE DIVISION 69kV-NAVSTMTR 69kV ck1	Main St 69kV E Bus	100.6	1.185	1.017	1.259	1.182	1.169	1.216								
	Miguel 69kV S Bus	100.6	1.176	1.044	1.224	1.177	1.172	1.202								**Current**
	Murray 69kV N Bus	100.6	1.096		1.150	1.087	1.073	1.109								**Grid Expansion Project**
	Provtor Valley 138kV Bus	100.6			1.045			1.024								
	Southbay 69kV S Bus	100.6			1.018											**Expected MVA to**
	Wabash 69kV Bus	100.6	1.072		1.139	1.069	1.056	1.098								**Exceed 200 MVA**
	CH-SX-SN 138kV + SAN VCNT-EL 69kV	100.6			1.023											
	PV-TC + LC-SY 138kV	100.6			1.015											
LINE DEL MAR 69kV-DELMARTP 69kV ck1	Del Mar 69kV E Bus	54.3	1.078	1.083	1.082	1.078	1.081	1.082	1.066	1.069	1.068	1.068	1.068	1.070	1.070	**Exists in Pre-Case**
LINE ESCNDIDO 69kV-FELCTATP 69kV ck1	Escondido 69kV SE Bus	102.1	1.070		1.053	1.027	1.021	1.025	1.045		1.029	1.010	1.016	1.009	1.011	
	Escondido 69kV SW Bus	102.1	1.088		1.073	1.050	1.047	1.050	1.063		1.050	1.033	1.038	1.034	1.035	**Exists in Pre-Case**
	Felicita 69kV S Bus	102.1	1.015													
LINE MESAHGTS 69kV-MISSION 69kV ck1	Mission 69kV N Bus	137.0	1.038	1.067	1.051	1.062	1.084	1.084	1.063	1.092	1.076	1.091	1.072	1.092	1.091	**Exists in Pre-Case**
TRAN LOSCOCHS 69kV-LOSCOCHS 138kV ck2	Los Coches 69kV W Bus	155.0							1.015		1.016	1.023	1.009	1.003		
LINE B 69kV-MAIN ST 69kV ck2	Main St 69kV W Bus	111.1		1.043			1.008	1.012	1.022	1.088	1.040	1.046	1.029	1.040	1.044	**Exists in Pre-Case**
LINE MIGUEL 69kV-JAMACHA 69kV ck2	Miguel 69kV S Bus	143.4		1.015												
LINE PENSQTOS 69kV-MIRAMRTP 69kV ck1	Penasquitos 69kV SE Bus	102.1	1.106	1.033	1.054				1.063		1.003					
	MR-PQ 69kV + PQ-MRM 69kV	102.1	1.166	1.120	1.122				1.134	1.081	1.084		1.005			
LINE CLAIRMNT 69kV-CLARMTTP 69kV ck1	Mission 69kV N Bus	50.3		1.002	1.001											
LINE EL CAJON 69kV-JAMACHA 69kV ck1	Murray 69kV N Bus	143.0		1.053						1.006						**Exists in Pre-Case**
	MIGUEL 230 CORRIDOR North of ML	143.0	1.008	1.144				1.242	1.050	1.188	1.040				1.271	
LINE EL CAJON 69kV-LOSCOCHS 69kV ck1	Murray 69kV N Bus	55.1	1.258	1.136	1.248	1.260	1.254	1.237	1.261	1.134	1.242	1.261	1.260	1.253	1.235	**Exists in Pre-Case**
	Jamacha 69kV S Bus	55.1														
LINE GARFIELD 69kV-EL CAJON 69kV ck1	Murray 69kV N Bus	102.1	1.358	1.360	1.358	1.347	1.351	1.352	1.319	1.320	1.317	1.315	1.314	1.316	1.316	**Exists in Pre-Case**
LINE MURRAY 69kV-GARFIELD 69kV ck1	Murray 69kV N Bus	102.1	1.155	1.157	1.155	1.146	1.149	1.150	1.122	1.123	1.120	1.118	1.117	1.119	1.119	**Exists in Pre-Case**
LINE SOUTHBAY 69kV-IMPRLBCH 69kV ck1	Otay 69kV Bus	55.1	1.393		1.404	1.386	1.382	1.389	1.385		1.397	1.383	1.365	1.360	1.368	**Exists in Pre-Case**
LINE BERNARDO 69kV-R.CARMEL 69kV ck1	Poway 69kV Bus	72.5	1.412	1.419	1.429	1.422	1.426	1.426	1.399	1.402	1.414	1.414	1.414	1.417	1.416	
	POM-SX 1 + 2 69kV	72.5	1.063	1.128	1.074	1.079	1.082	1.081	1.065	1.124	1.074	1.081	1.078	1.081	1.082	**Exists in Pre-Case**
	EPP-ES 230kV + AR-SX 69kV	72.5						1.040							1.004	
LINE DEL MAR 69kV-PENSQTOS 69kV ck1	Penasquitos 69kV NW Bus	50.3		1.038	1.053					1.042	1.059		1.004			
LINE OTAY 69kV-OTAYLKTP 69kV ck1	Sweetwater 69kV Bus	50.3							1.153		1.149	1.143	1.060	1.050	1.050	**Exists in Pre-Case**
LINE SOUTHBAY 69kV-OTAY 69kV ck2	Southbay 69kV N Bus	100.6	1.209		1.217	1.203	1.200	1.205	1.204		1.212	1.202	1.185	1.181	1.187	**Exists in Pre-Case**
LINE POMERADO 69kV-SYCAMORE 69kV ck2	Sycamore 69kV S Bus	136.8		1.064	1.030	1.115	1.170	1.145		1.061	1.030	1.113	1.100	1.154	1.128	**Exists in Pre-Case**
LINE OCNSDETP 69kV-STUARTTP 69kV ck1	TA-SO 1 + 2 230KV	32.3	1.024	1.120					1.022	1.113						
LINE STUARTTP 69kV-LASPULGS 69kV ck1	TA-SO 1 + 2 230KV	32.3		1.065						1.058						
LINE SANMATEO 138kV-LAGNA NL 138kV ck1	TA-TB + TA-PI 138kV	136.5	1.005	1.005	1.005	1.005	1.005	1.005	1.005	1.005	1.005	1.005	1.005	1.005	1.005	**Exists in Pre-Case**
LINE TALEGA 138kV-MARGARTA 138kV ck1	TALEGA JCT to CAPISTRANO 138 ck 1	273.7	1.427	1.427	1.427	1.427	1.427	1.427	1.427	1.427	1.427	1.427	1.427	1.427	1.427	**Exists in Pre-Case**
	TALEGA JCT to TALEGA 138 ck 1	273.7	1.427	1.427	1.427	1.427	1.427	1.427	1.427	1.427	1.427	1.427	1.427	1.427	1.427	
LINE TALEGA 138kV-SANMATEO 138kV ck1	TA-TB + TA-PI 138kV	150.0	1.101	1.101	1.101	1.101	1.101	1.101	1.101	1.101	1.101	1.101	1.101	1.101	1.101	**Exists in Pre-Case**
TRAN ESCNDO50 138kV-ESCNDIDO 69kV ck2	BQ-CC-NCM-ES + CAN-SH-SA 138kV	73.0	1.014	1.012	1.012	1.014	1.013	1.013	1.018	1.017	1.015	1.015	1.015	1.015	1.015	**Exists in Pre-Case**
	CAN-SA-SH + EA-CAN 138kV	73.0	1.015	1.013	1.012	1.014	1.013	1.013	1.018	1.017	1.015	1.015	1.015	1.015	1.015	
LINE LOSCOCHS 138kV-SOUTHBAY 138kV ck1	MIGUEL 230 CORRIDOR West of SN	204.1							1.044	1.058	1.038	1.016			1.009	
	SOUTHBAY-MAIN CORRIDOR	204.1							1.056	1.110	1.053	1.048				
LINE MARGARTA 138kV-TRABUCO 138kV ck1	TALEGA JCT to CAPISTRANO 138 ck 1	273.7	1.057	1.057	1.057	1.057	1.057	1.057	1.057	1.057	1.057	1.057	1.057	1.057	1.057	
	TALEGA JCT to TALEGA 138 ck 1	273.7	1.057	1.057	1.057	1.057	1.057	1.057	1.057	1.057	1.057	1.057	1.057	1.057	1.057	
LINE POWAY 69kV-POMERADO 69kV ck1	EPP-ES + ES-EA-SA 230KV	136.8						1.416							1.383	
	EPP-ES 230KV + BE-AR 69KV	136.8						1.319							1.287	**Exists in Pre-Case**
	EPP-ES 230KV + AR-SX 69KV	136.8						1.374							1.342	
LINE SOUTHBAY 69kV-SWEETWTR 69kV ck1	Southbay 69kV S Bus	143.0								1.106						
TRAN SYCAMORE 230kV-SYCAMORE 69kV ck1	EPP-ES + ES-EA-SA 230KV	285.0						1.071							1.026	**Exists in Pre-Case**
TRAN SYCAMORE 230kV-SYCAMORE 69kV ck2	EPP-ES + ES-EA-SA 230KV	285.0						1.071							1.026	
LINE SYCAMORE 138kV-CARLTHTP 138kV ck1	CH-ES-NCM-SX	248.0					1.158	1.047						1.023		
	EPP-ES 230KV + BE-AR 69KV	248.0						1.011								
	EPP-ES 230KV + AR-SX 69KV	248.0						1.013								
LINE SYCAMORE 138kV-CHCARITA 138kV ck1	CH-SX-SN 138KV + SAN VCNT-EL 69KV	204.1					1.118	1.060						1.009		
	PQ-NCW + EA-BQ-PQ 138KV	204.1					1.066	1.046								**Possible**
	MIGUEL 230 CORRIDOR West of SN	204.1					1.109	1.043								**Grid Expansion**
	Friars 138kV Bus	204.1					1.105	1.074						1.018		**Project**
	FR-MS 138KV + CM-MS-FV 69KV	204.1					1.143	1.112						1.056		
	DB-FR-MIR 138KV + CM-MS-FV 69KV	204.1					1.102	1.077						1.015		
	OT JCT TO PQ 1	204.1					1.181	1.158						1.082	1.027	
	OT-MS 1&2, DB-DBtap, DB-PQ	204.1					1.104							1.018		
	OT-MS 1&2, FR-MS	204.1					1.139							1.052		
	EPP-ES + ES-EA-SA 230KV	204.1						1.181							1.057	
	EPP-ES 230KV + BE-AR 69KV	204.1						1.162							1.038	
	EPP-ES 230KV + AR-SX 69KV	204.1						1.165							1.041	
	OLD TOWN TO MISSION 1	204.1						1.072								
	OLD TOWN TO MISSION 2	204.1						1.106								
LINE MISSION 138kV-UPTOWN 138kV ck1	MIGUEL 230 CORRIDOR North of ML	408.0								1.032					1.112	**Exists in Pre-Case**
LINE PRCTRVLY 138kV-MIGUEL 138kV ck1	MIGUEL 230 CORRIDOR West of SN	468.0						1.018								
TRAN MIGUEL 230kV-MIGUEL 138kV ck1	MIGUEL 230 CORRIDOR West of SN	468.0						1.019								
TRAN SOUTHBAY 69kV-SOUTHBAY 138kV ck1	Los Coches 69kV E Bus	164.0							1.001							
	Los Coches 69kV W Bus	164.0							1.002							
	Miguel 69kV S Bus	164.0							1.085		1.053	1.071				
	Murray 69kV N Bus	164.0							1.039		1.012	1.023				
	LC-SY + SY-TC 138KV	164.0							1.164	1.042	1.145	1.139				
	PV-TC + LC-SY 138KV	164.0							1.067		1.049	1.042				**Exists in Pre-Case**
	MIGUEL 230 CORRIDOR North of ML	164.0							1.156	1.033	1.123	1.126	1.012	1.004	1.078	
	ML-SX + ML-MS 230KV	164.0							1.009							
	MIGUEL 230 CORRIDOR West of LC	164.0							1.004							
	SOUTHBAY-MAIN CORRIDOR	164.0							1.336	1.228	1.307	1.333	1.164	1.173	1.157	
	MI50-SY + UT-SY 138KV	164.0													1.157	
	MI51-SY + UT-SY 138KV	164.0													1.157	

Blank

Appendix C – Power Flow Plots

Summary Table of Plots in Appendix

Only Cases with X are included in this appendix

		Category A	Category B			Comments
	File Name		Escondido to EPP TL	Sycamore 230 to Sycamore 69 TL2	Silver Gate to South Bay (MLMS3 Tap for pre cases) TL	
Pre	alt1					
	alt1_sen1					
	alt2					
	alt3					
	alt4	X	X	X	X	South Bay @690MW; Enpex @500MW
	alt5	X	X	X	X	South Bay @563MW; Enpex @500MW
	alt6	X	X	X	X	South Bay @563MW; Enpex @750MW
	alt7					
	alt8	X	X	X	X	South Bay @563MW; Enpex @500MW
	case					
	case_sen1					
	case_sen2					
Post	alt1					
	alt2					
	alt3					
	alt4	X	X	X	X	South Bay @650MW; Enpex @500MW
	alt6	X	X	X	X	South Bay @650MW; Enpex @750MW
	alt7					
	alt8	X	X	X	X	South Bay @650MW; Enpex @500MW
	case					
	case_sen2					

The cases defined as alt 8 are the requisite cases in determining the cost assignment and upgrade requirements. All other cases are to considered sensitivities.

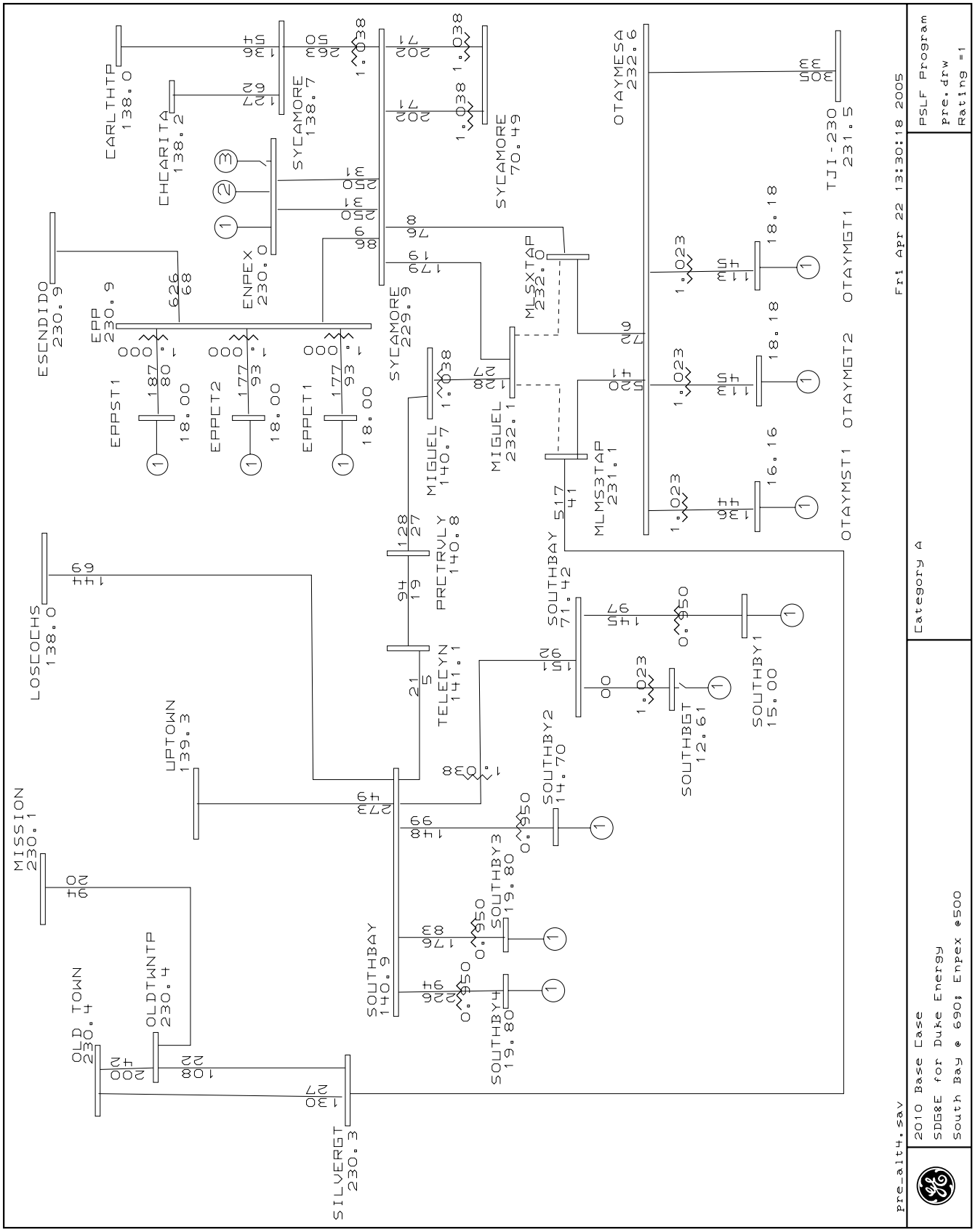
CARLTHTP 138.0
CHCARITA 138.2
SYCAMORE 138.7
ENPEX 230.0
SYCAMORE 70.49
OTAYMESA 232.6
TJI-230 231.5
ESCNDIDO 230.9
EPP 230.9
EPPST1 18.00
EPPCT2 18.00
EPPCT1 18.00
SYCAMORE 229.9
MLSXTAP 232.0
OTAYMGT1 18.18
OTAYMGT2 18.18
OTAYMST1 16.16
MIGUEL 140.7
MIGUEL 232.1
MLMS3TAP 231.1
PRCTRVLY 140.8
SOUTHBAY 71.42
LOSCOCHS 138.0
TELECYN 141.1
SOUTHBY1 15.00
SOUTHBGT 12.61
SOUTHBY2 14.70
UPTOWN 139.3
MISSION 230.1
SOUTHBY3 19.80
SOUTHBAY 140.9
SOUTHBY4 19.80
OLD TOWN 230.4
OLDTWNTP 230.4
SILVERGT 230.3
Category A
PSLF Program
pre.drw
Rating =1
Fri Apr 22 13:30:18 2005
2010 Base Case
SDG&E for Duke Energy
South Bay @ 690; Enpex @500
pre_alt4.sav

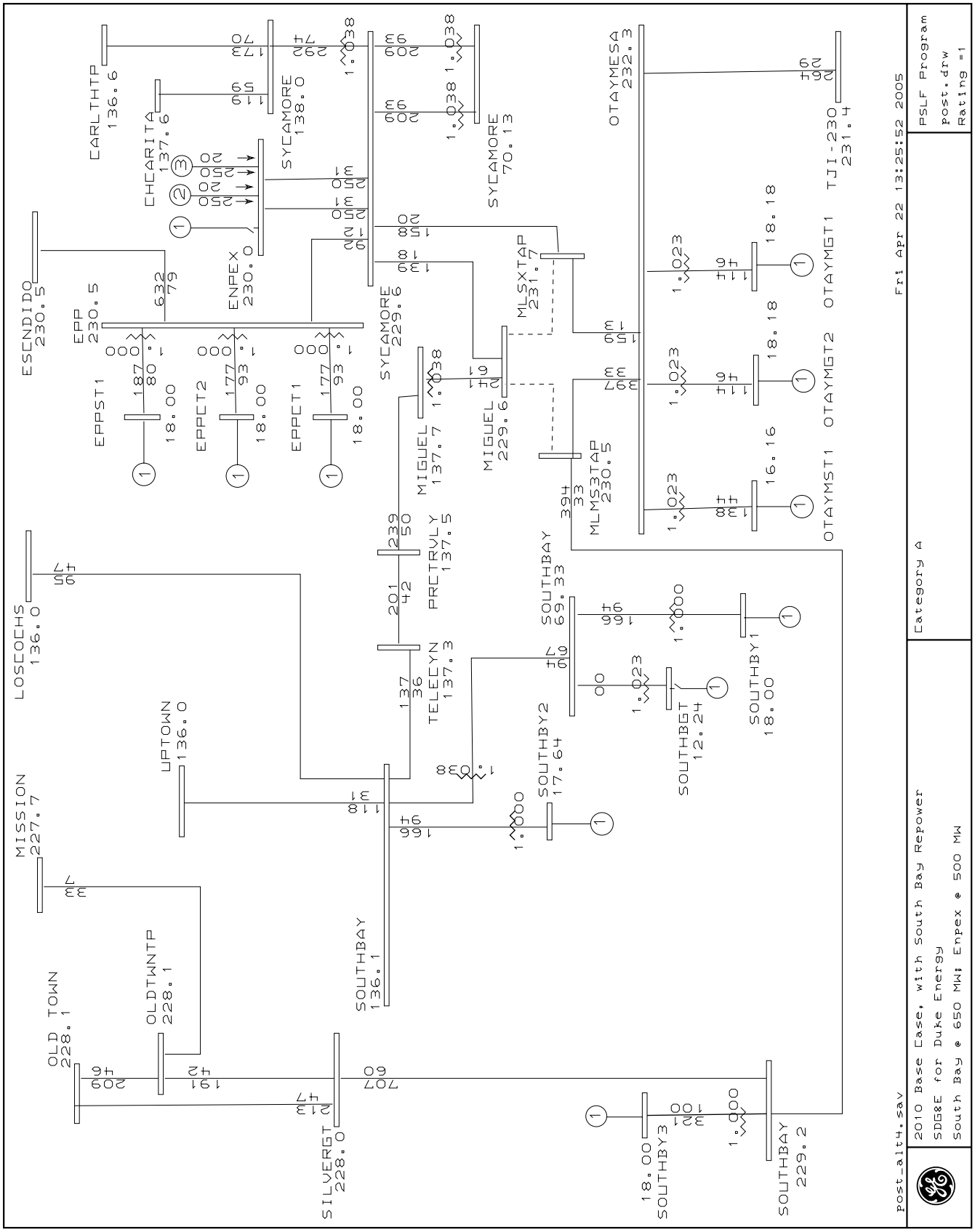
CARLTHTP
136.6
CHCARITA
137.6
SYCAMORE
138.0
SYCAMORE
70.13
OTAYMESA
232.3
TJI-230
231.4
ESCNDIDO
230.5
EPP
230.5
ENPEX
230.0
SYCAMORE
229.6
MLSXTAP
231.7
EPPST1
EPPCT2
EPPCT1
MIGUEL
137.7
MIGUEL
229.6
MLMS3TAP
230.5
OTAYMGT1
OTAYMGT2
OTAYMST1
LOSCOCHS
136.0
PRCTRVLY
137.5
SOUTHBAY
69.33
SOUTHBY1
SOUTHBGT
12.24
TELECYN
137.3
SOUTHBY2
17.64
UPTOWN
136.0
MISSION
227.7
SOUTHBAY
136.1
OLD TOWN
228.1
OLDTWNTP
228.1
SILVERGT
228.0
SOUTHBY3
SOUTHBAY
229.2
Fri Apr 22 13:25:52 2005
PSLF Program
post.drw
Rating =1
Category A
post_alt4.sav
2010 Base Case, with South Bay Repower
SDG&E for Duke Energy
South Bay @ 650 MW; Enpex @ 500 MW

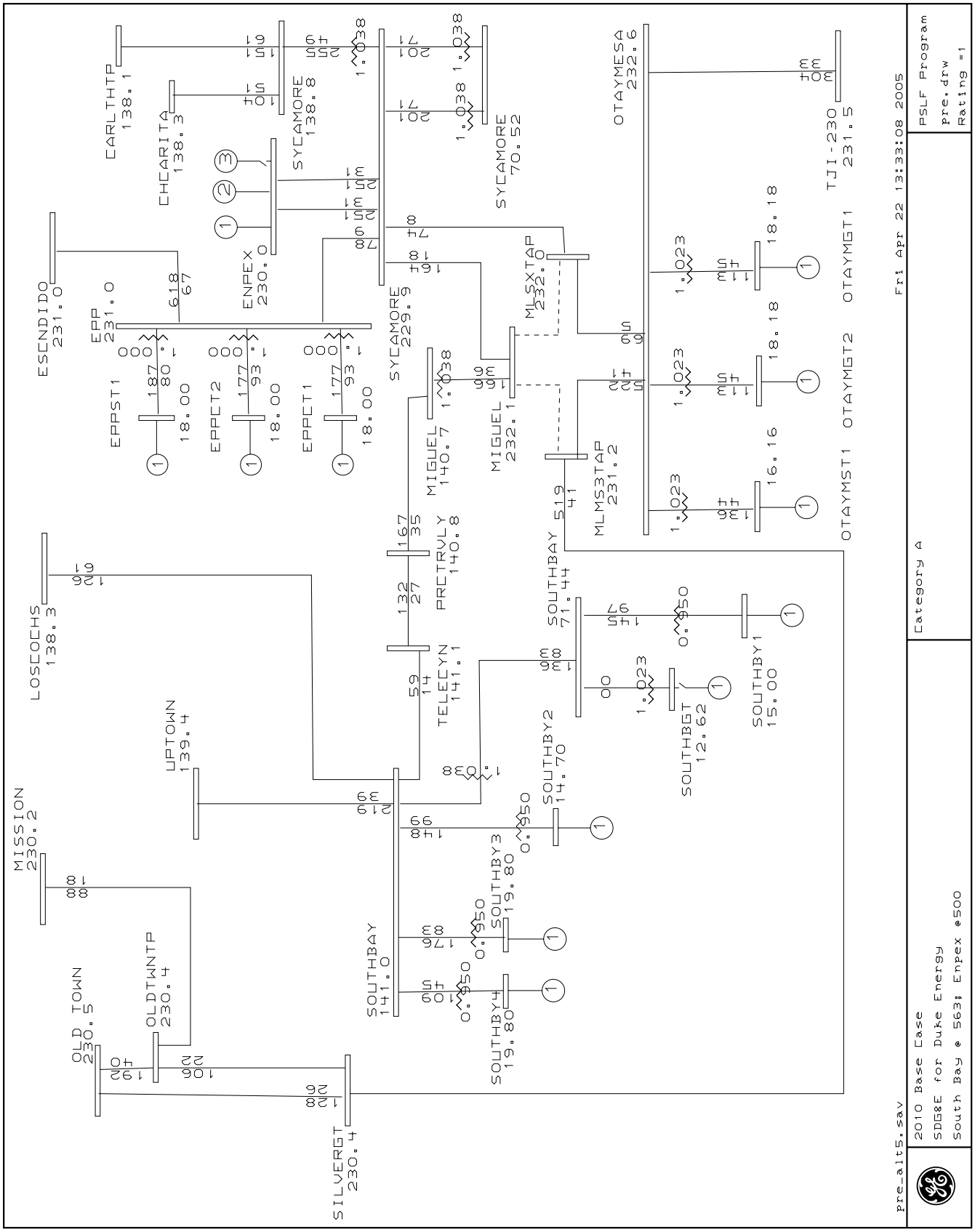
CARLTHTP 138.1
CHCARITA 138.3
SYCAMORE 138.8
SYCAMORE 70.52
OTAYMESA 232.6
TJI-230 231.5
ESCNDIDO 231.0
EPP 231.0
ENPEX 230.0
SYCAMORE 229.9
MLSXTAP 232.0
EPPST1
EPPCT2
EPPCT1
MIGUEL 140.7
MIGUEL 232.1
MLMS3TAP 231.2
OTAYMGT1
OTAYMGT2
OTAYMST1
PRCTRVLY 140.8
SOUTHBAY 71.44
SOUTHBY1 15.00
SOUTHBGT 12.62
SOUTHBY2 14.70
TELECYN 141.1
LOSCOCHS 138.3
UPTOWN 139.4
MISSION 230.2
SOUTHBAY 141.0
SOUTHBY3 19.80
SOUTHBY4 19.80
OLD TOWN 230.5
OLDTWNTP 230.4
SILVERGT 230.4
Fri Apr 22 13:33:08 2005
PSLF Program
pre.drw
Rating =1
Category A
2010 Base Case
SDG&E for Duke Energy
South Bay @ 563; Enpex @500
pre_alt5.sav

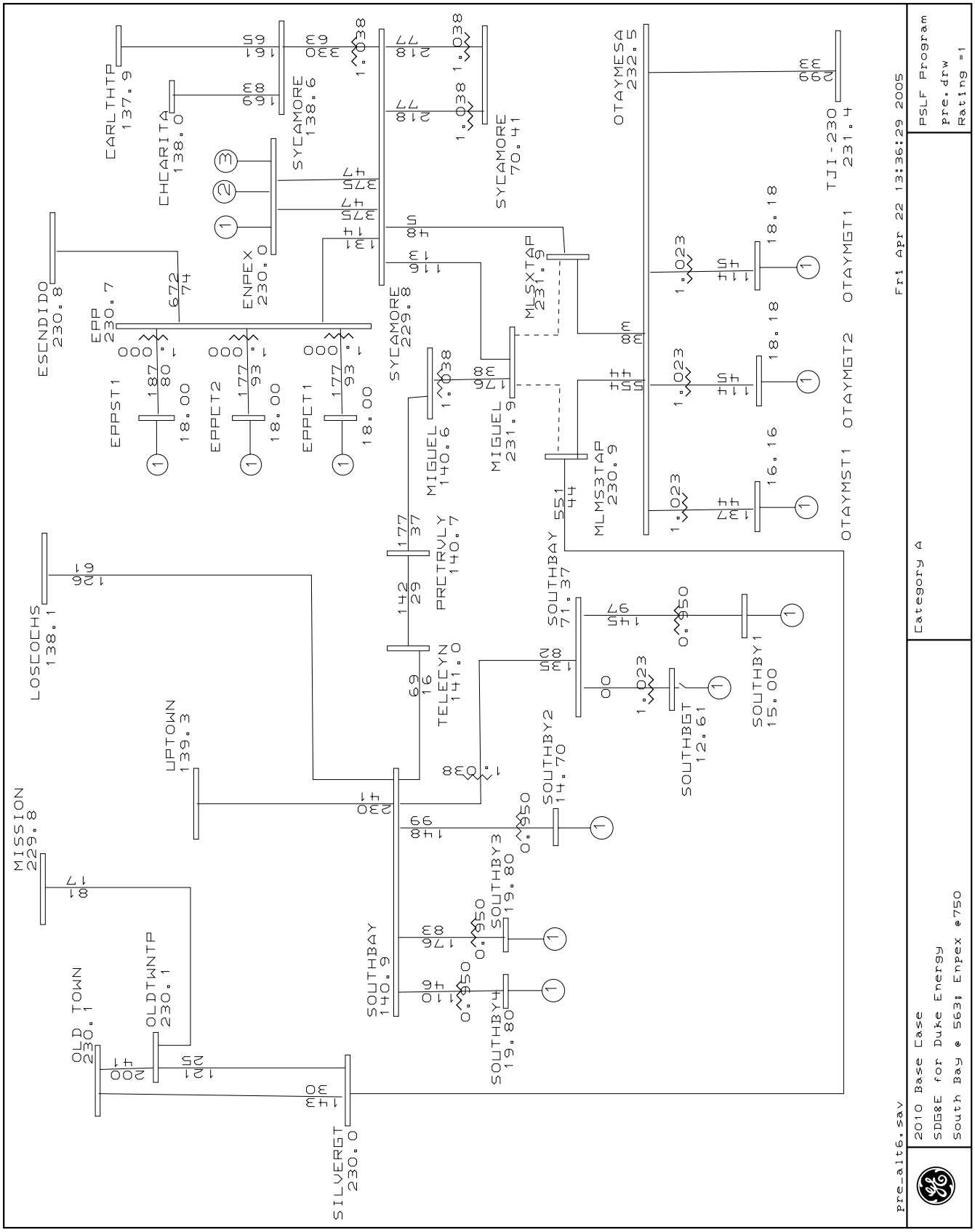
CARLTHTP
137.9
CHCARITA
138.0
SYCAMORE
138.6
SYCAMORE
70.41
OTAYMESA
232.5
TJI-230
231.4
ESCNDIDO
230.8
EPP
230.7
ENPEX
230.0
SYCAMORE
229.8
MLSXTAP
231.9
OTAYMGT1
OTAYMGT2
OTAYMST1
EPPST1
EPPCT2
EPPCT1
MIGUEL
140.6
MIGUEL
231.9
MLMS3TAP
230.9
PRCTRVLY
140.7
SOUTHBAY
71.37
LOSCOCHS
138.1
TELECYN
141.0
SOUTHBY1
15.00
SOUTHBGT
12.61
SOUTHBY2
14.70
UPTOWN
139.3
MISSION
229.8
SOUTHBY3
19.80
SOUTHBAY
140.9
SOUTHBY4
19.80
OLD TOWN
230.1
OLDTWNTP
230.1
SILVERGT
230.0
Fri Apr 22 13:36:29 2005
PSLF Program
pre.drw
Rating =1
Category A
pre_alt6.sav
2010 Base Case
SDG&E for Duke Energy
South Bay @ 563; Enpex @750

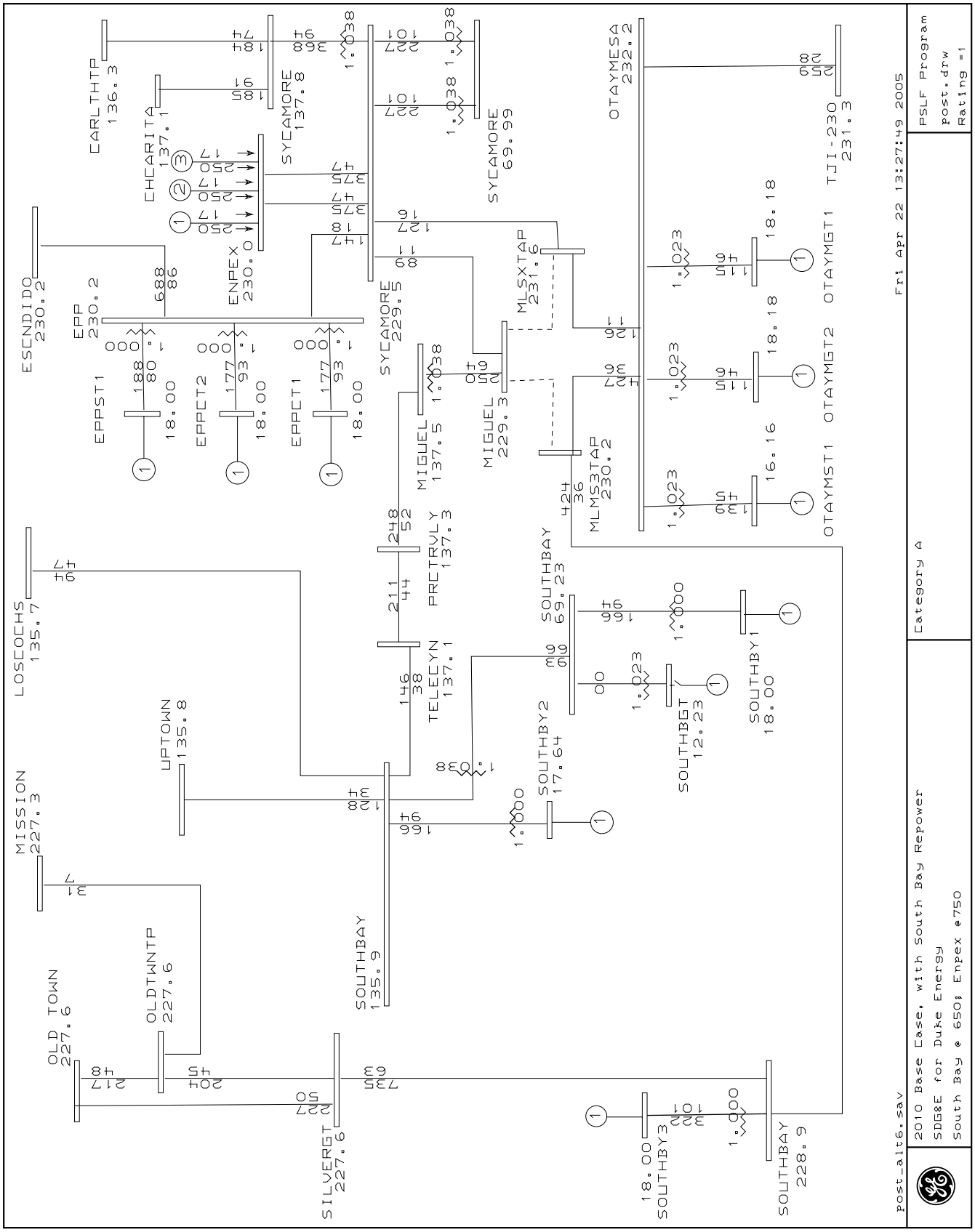
CARLTHTP
136.3
CHEARITA
137.1
SYCAMORE
137.8
SYCAMORE
69.99
OTAYMESA
232.2
TJI-230
231.3
ESCENDIDO
230.2
EPP
230.2
ENPEX
230.0
SYCAMORE
229.5
MLSXTAP
231.6
EPPST1
18.00
EPPCT2
18.00
EPPCT1
18.00
MIGUEL
137.5
MIGUEL
229.3
MLMS3TAP
230.2
OTAYMGT1
18.18
OTAYMGT2
18.18
OTAYMST1
16.16
LOSCOCHS
135.7
PRCTRVLY
137.3
SOUTHBAY
69.23
SOUTHBY1
18.00
TELECYN
137.1
SOUTHBY2
17.64
SOUTHBGT
12.23
UPTOWN
135.8
MISSION
227.3
SOUTHBAY
135.9
OLD TOWN
227.6
OLDTWNTP
227.6
SILVERGT
227.6
SOUTHBY3
18.00
SOUTHBAY
228.9
Fri Apr 22 13:27:49 2005
PSLF Program
post.drw
Rating =1
Category A
post_alt6.sav
2010 Base Case, with South Bay Repower
SDG&E for Duke Energy
South Bay @ 650; Enpex @750

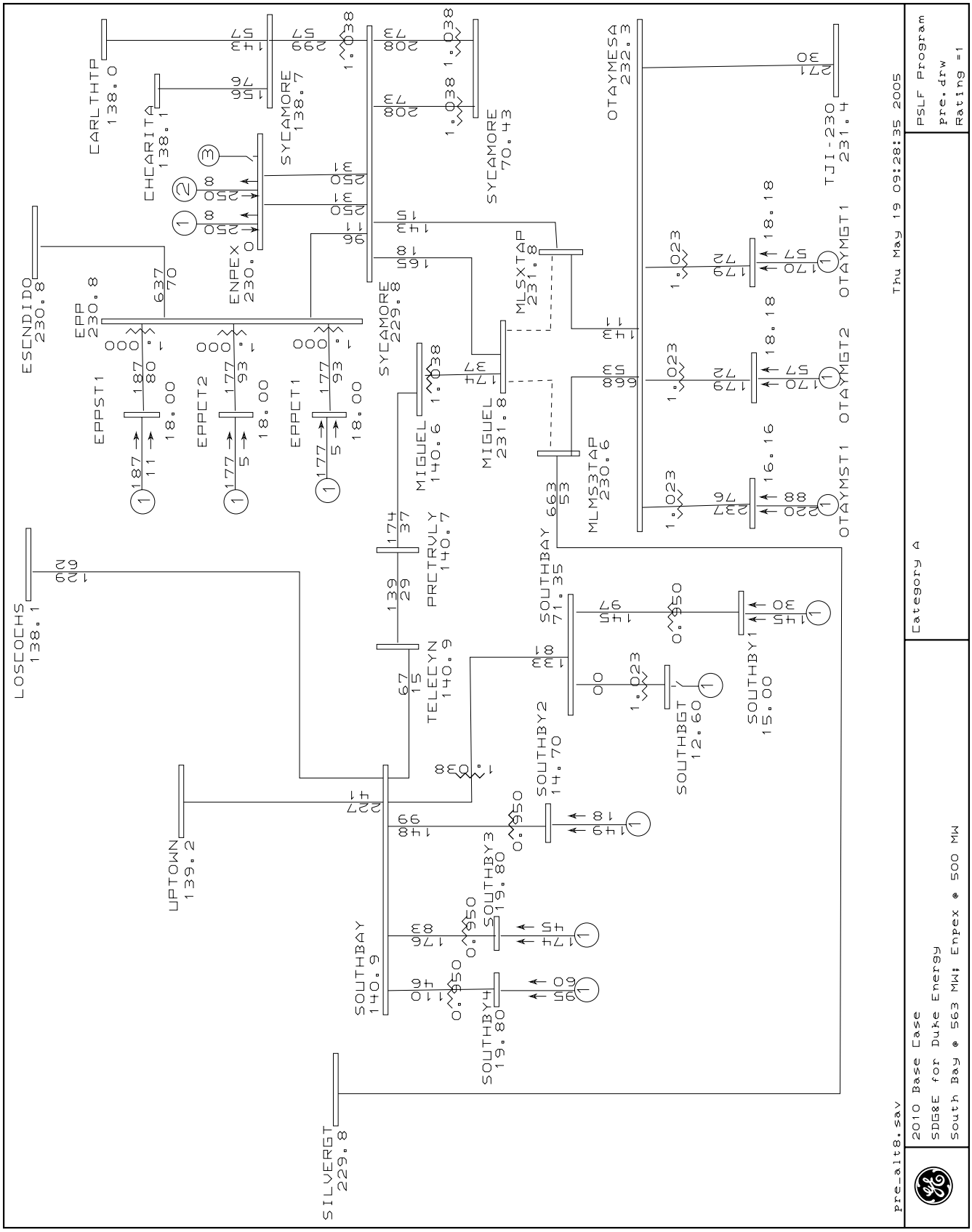
CARLTHTP
138.0
CHCARITA
138.1
SYCAMORE
138.7
SYCAMORE
70.43
OTAYMESA
232.3
TJI-230
231.4
ESCNDIDO
230.8
EPP
230.8
ENPEX
230.0
SYCAMORE
229.8
MLSXTAP
231.8
OTAYMGT1
OTAYMGT2
OTAYMST1
EPPST1
EPPCT2
EPPCT1
MIGUEL
140.6
MIGUEL
231.8
MLMS3TAP
230.6
LOSCOCHS
138.1
PRCTRVLY
140.7
SOUTHBAY
71.35
SOUTHBY1
SOUTHBY2
14.70
SOUTHBGT
12.60
TELECYN
140.9
UPTOWN
139.2
SOUTHBY3
19.80
SOUTHBAY
140.9
SOUTHBY4
19.80
SILVERGT
229.8
Thu May 19 09:28:35 2005
PSLF Program
pre.drw
Rating =1
Category A
pre_alt8.sav
2010 Base Case
SDG&E for Duke Energy
South Bay @ 563 MW; Enpex @ 500 MW

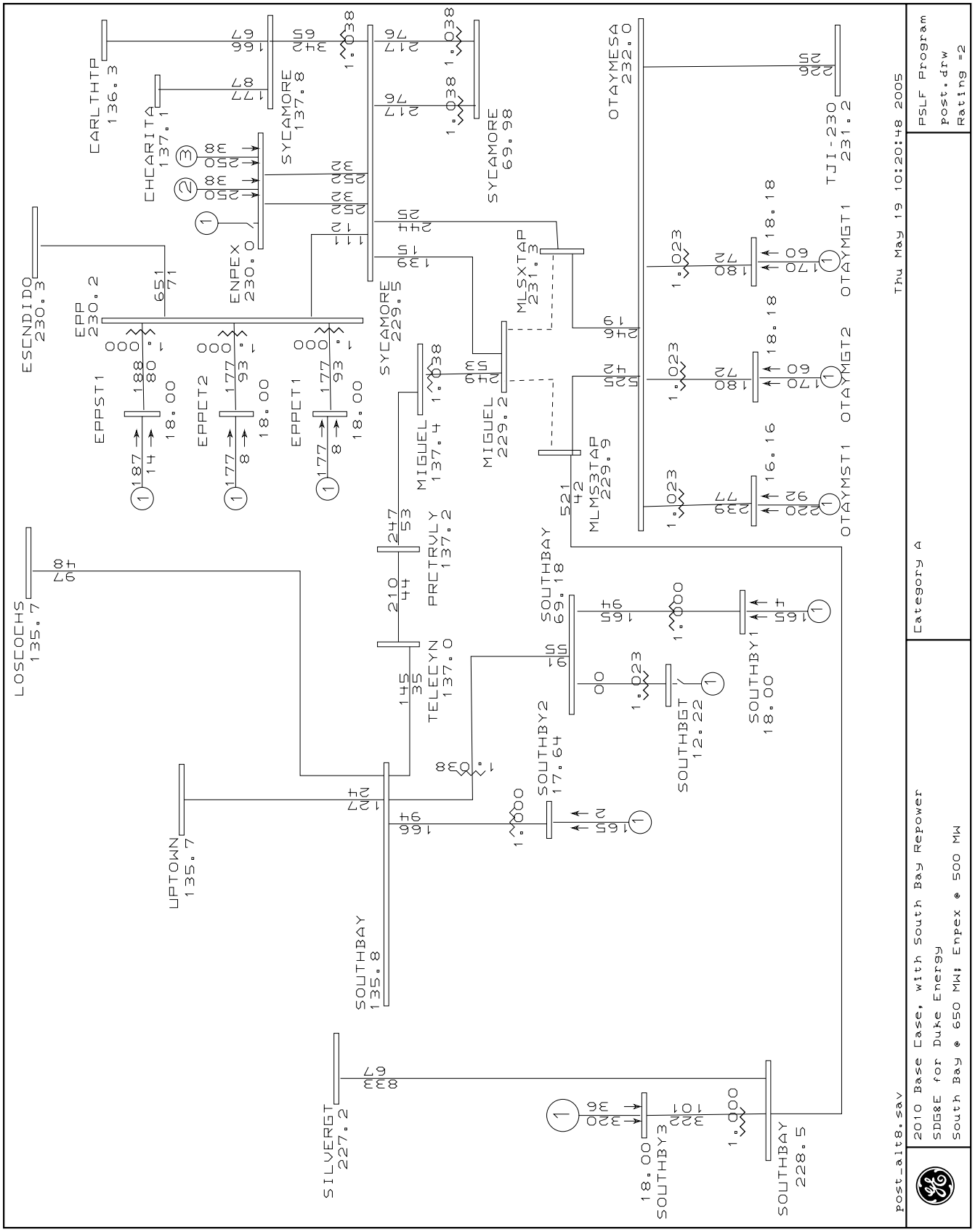
EARLTHTP
136.3
CHCARITA
137.1
SYCAMORE
137.8
SYCAMORE
69.98
OTAYMESA
232.0
TJI-230
231.2
ESCNDIDO
230.3
EPP
230.2
ENPEX
230.0
SYCAMORE
229.5
MLSXTAP
231.3
EPPST1
18.00
EPPCT2
18.00
EPPCT1
18.00
MIGUEL
137.4
MIGUEL
229.2
MLMS3TAP
229.9
OTAYMGT1
OTAYMGT2
OTAYMST1
LOSCOCHS
135.7
PRCTRVLY
137.2
SOUTHBAY
69.18
TELECYN
137.0
SOUTHBY1
18.00
SOUTHBGT
12.22
SOUTHBY2
17.64
UPTOWN
135.7
SOUTHBAY
135.8
SILVERGT
227.2
SOUTHBY3
18.00
SOUTHBAY
228.5
Thu May 19 10:20:48 2005
PSLF Program
post.drw
Rating =2
Category A
2010 Base Case, with South Bay Repower
SDG&E for Duke Energy
South Bay @ 650 MW; Enpex @ 500 MW
post_alt8.sav

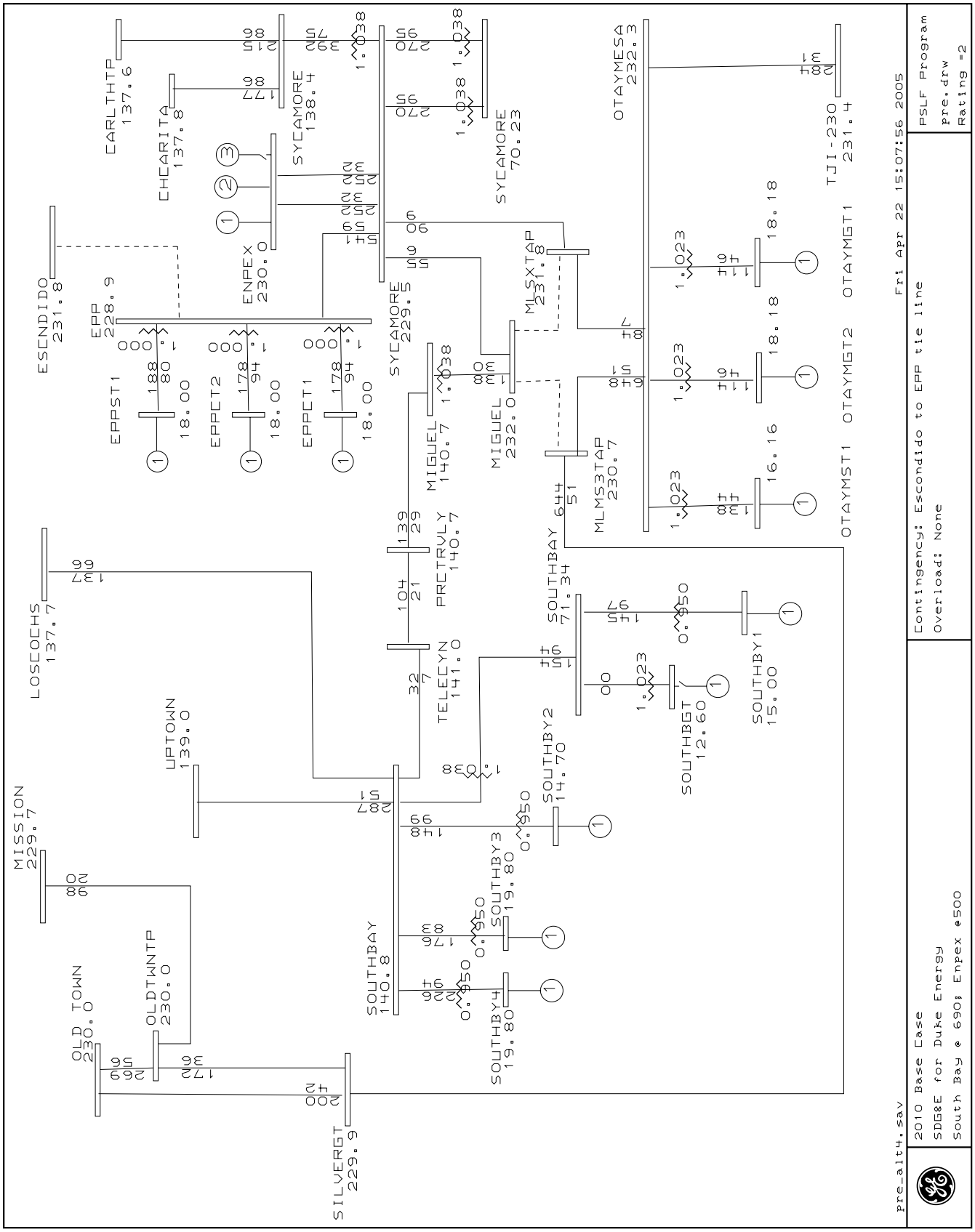
CARLTHTP 137.6
CHCARITA 137.8
SYCAMORE 138.4
ENPEX 230.0
SYCAMORE 70.23
SYCAMORE 229.5
OTAYMESA 232.3
TJI-230 231.4
ESCNDIDO 231.8
EPP 228.9
EPPST1 18.00
EPPCT2 18.00
EPPCT1 18.00
MLSXTAP 231.8
MIGUEL 140.7
MIGUEL 232.0
MLMS3TAP 230.7
OTAYMGT1 18.18
OTAYMGT2 18.18
OTAYMST1 16.16
LOSCOCHS 137.7
PRCTRVLY 140.7
SOUTHBAY 71.34
SOUTHBY1 15.00
SOUTHBGT 12.60
TELECYN 141.0
UPTOWN 139.0
SOUTHBY2 14.70
MISSION 229.7
SOUTHBY3 19.80
SOUTHBAY 140.8
SOUTHBY4 19.80
OLD TOWN 230.0
OLDTWNTP 230.0
SILVERGT 229.9
Fri Apr 22 15:07:56 2005
Contingency: Escondido to EPP tie line
Overload: None
PSLF Program
pre.drw
Rating =2
pre_alt4.sav
2010 Base Case
SDG&E for Duke Energy
South Bay @ 690; Enpex @500

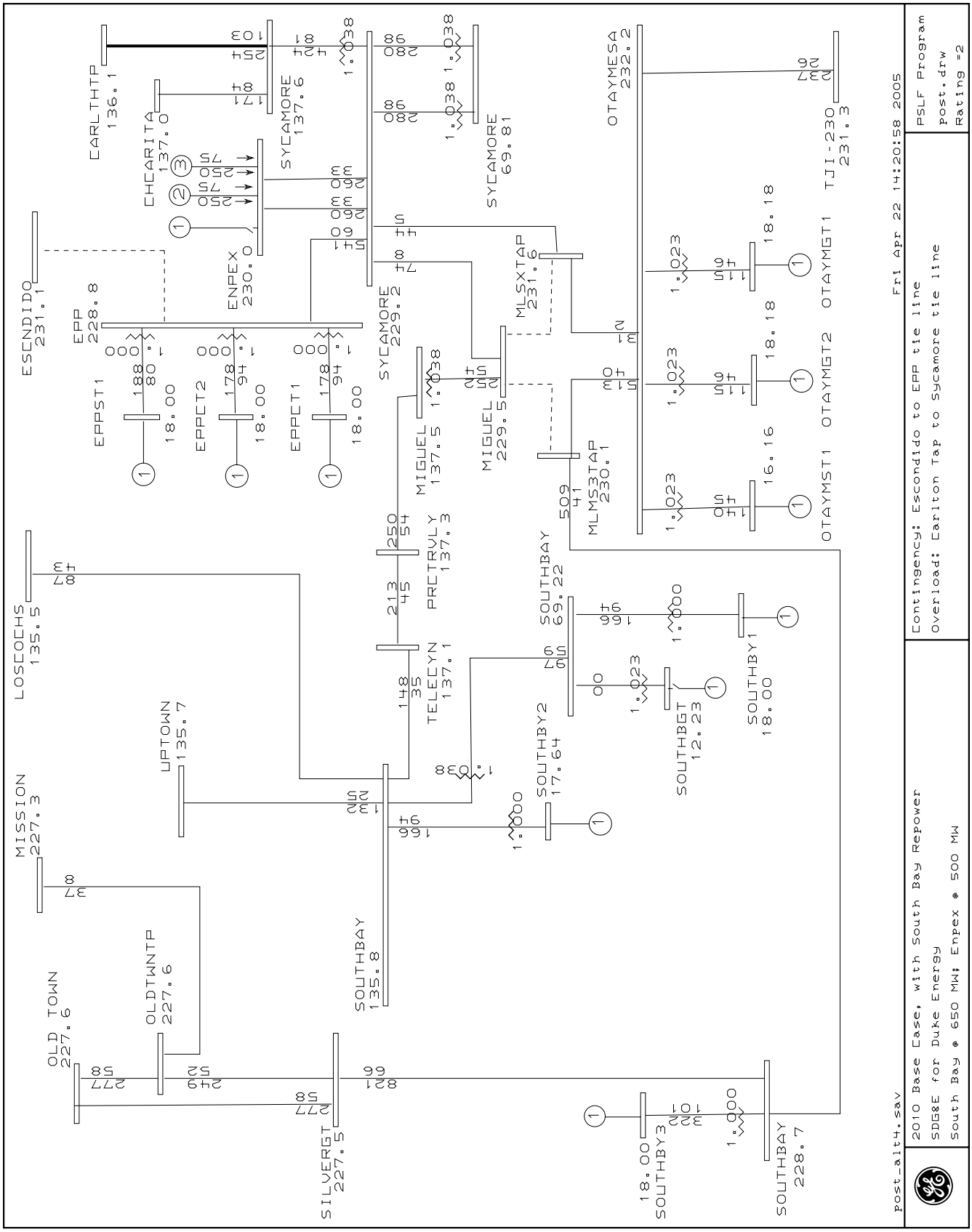
CARLTHTP
136.1
CHCARITA
137.0
SYCAMORE
137.6
SYCAMORE
69.81
OTAYMESA
232.2
TJI-230
231.3
ESENDIDO
231.1
EPP
228.8
ENPEX
230.0
SYCAMORE
229.2
MLSXTAP
231.6
EPPST1
EPPCT2
EPPCT1
MIGUEL
137.5
MIGUEL
229.5
MLMS3TAP
230.1
OTAYMGT1
OTAYMGT2
OTAYMST1
LOSCOCHS
135.5
PRCTRVLY
137.3
SOUTHBAY
69.22
TELECYN
137.1
SOUTHBY1
SOUTHBGT
12.23
SOUTHBY2
17.64
UPTOWN
135.7
MISSION
227.3
SOUTHBAY
135.8
OLD TOWN
227.6
OLDTWNTP
227.6
SILVERGT
227.5
SOUTHBY3
SOUTHBAY
228.7
Fri Apr 22 14:20:58 2005
PSLF Program
post.drw
Rating =2
Contingency: Escondido to EPP tie line
Overload: Carlton Tap to Sycamore tie line
post_alt4.sav
2010 Base Case, with South Bay Repower
SDG&E for Duke Energy
South Bay @ 650 MW; Enpex @ 500 MW

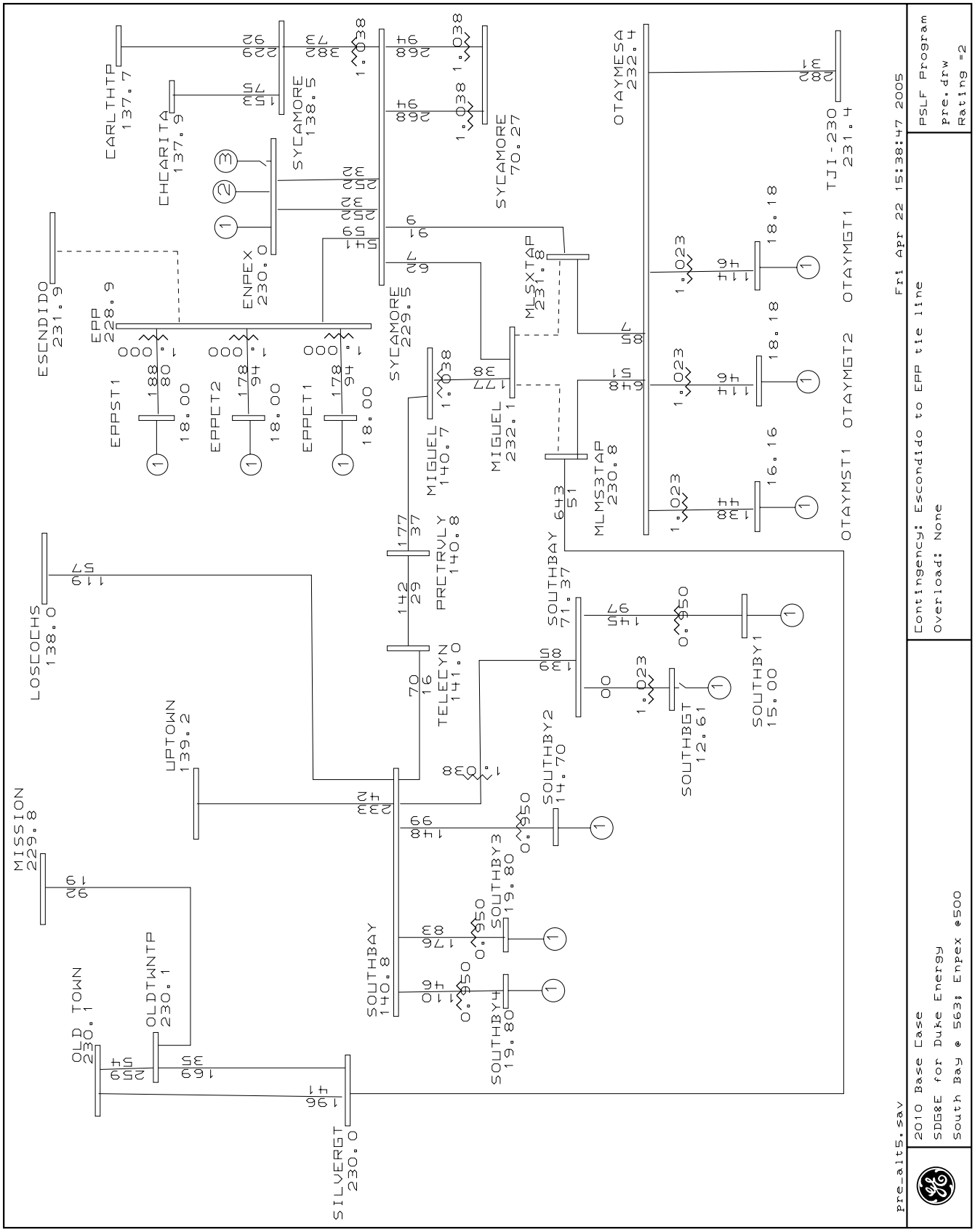
CARLTHTP 137.7
CHCARITA 137.9
SYCAMORE 138.5
ENPEX 230.0
SYCAMORE 229.5
SYCAMORE 70.27
OTAYMESA 232.4
TJI-230 231.4
ESCNDIDO 231.9
EPP 228.9
EPPST1 188 80 1.00 18.00
EPPCT2 178 94 1.00 18.00
EPPCT1 178 94 1.00 18.00
MLSXTAP 231.8
MIGUEL 140.7
MIGUEL 232.1
MLMS3TAP 230.8
OTAYMST1 16.16
OTAYMGT2 18.18
OTAYMGT1 18.18
LOSCOCHS 138.0
PRCTRVLY 140.8
TELECYN 141.0
SOUTHBAY 71.37
SOUTHBY1 15.00
SOUTHBGT 12.61
SOUTHBY2 14.70
UPTOWN 139.2
MISSION 229.8
SOUTHBAY 140.8
SOUTHBY3 19.80
SOUTHBY4 19.80
OLD TOWN 230.1
OLDTWNTP 230.1
SILVERGT 230.0
Fri Apr 22 15:38:47 2005
Contingency: Escondido to EPP tie line
Overload: None
PSLF Program
pre.drw
Rating =2
pre_alt5.sav
2010 Base Case
SDG&E for Duke Energy
South Bay @ 563; Enpex @500

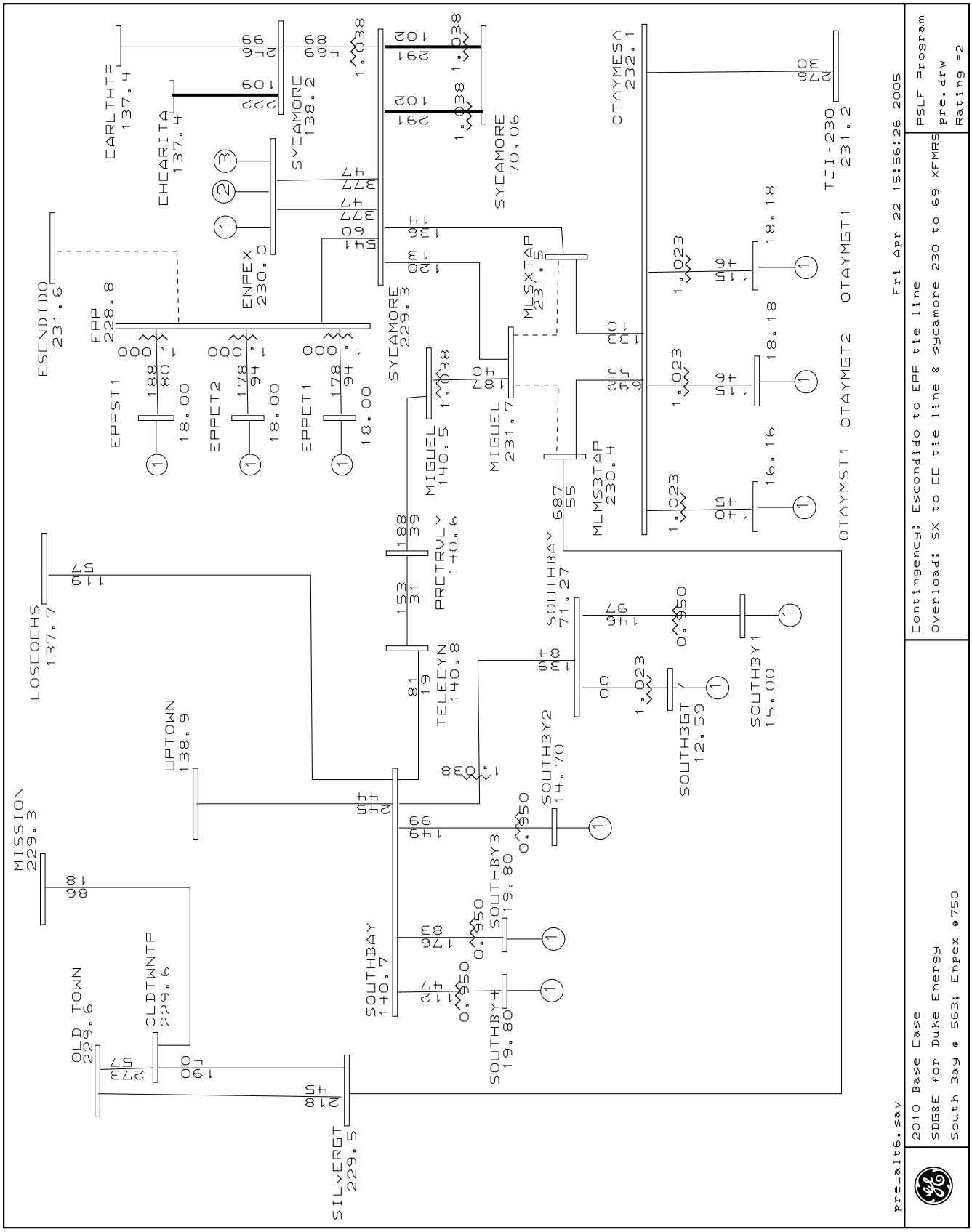
CARLTHTP 137.4
CHCARITA 137.4
SYCAMORE 138.2
SYCAMORE 70.06
OTAYMESA 232.1
TJI-230 231.2
ESCNDIDO 231.6
EPP 228.8
ENPEX 230.0
SYCAMORE 229.3
MLSXTAP 231.5
EPPST1 18.00
EPPCT2 18.00
EPPCT1 18.00
MIGUEL 140.5
MIGUEL 231.7
MLMS3TAP 230.4
OTAYMST1 16.16
OTAYMGT2 18.18
OTAYMGT1 18.18
LOSCOCHS 137.7
PRCTRVLY 140.6
TELECYN 140.8
SOUTHBAY 71.27
SOUTHBY1 15.00
SOUTHBGT 12.59
SOUTHBY2 14.70
SOUTHBY3 19.80
SOUTHBY4 19.80
SOUTHBAY 140.7
UPTOWN 138.9
MISSION 229.3
OLD TOWN 229.6
OLDTWNTP 229.6
SILVERGT 229.5
Fri Apr 22 15:56:26 2005
PSLF Program
pre.drw
Rating =2
Contingency: Escondido to EPP tie line
Overload: SX to CC tie line & sycamore 230 to 69 XFMRS
2010 Base Case
SDG&E for Duke Energy
South Bay @ 563; Enpex @750
pre_alt6.sav

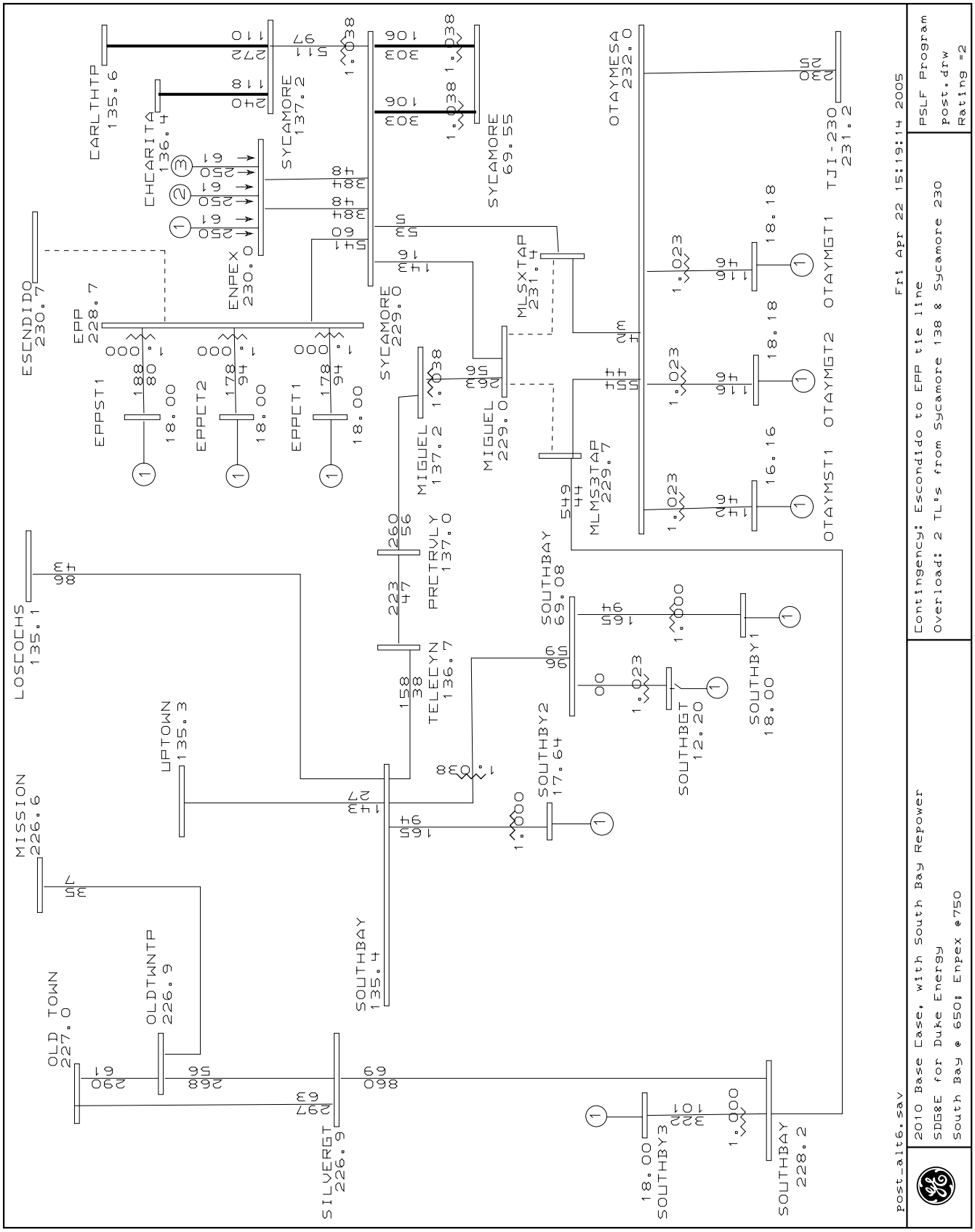
CARLTHTP
135.6
CHCARITA
136.4
SYCAMORE
137.2
SYCAMORE
69.55
OTAYMESA
232.0
TJI-230
231.2
ESCNDIDO
230.7
EPP
228.7
ENPEX
230.0
SYCAMORE
229.0
MLSXTAP
231.4
EPPST1
18.00
EPPCT2
18.00
EPPCT1
18.00
MIGUEL
137.2
MIGUEL
229.0
MLMS3TAP
229.7
OTAYMST1
16.16
OTAYMGT2
18.18
OTAYMGT1
18.18
LOSCOCHS
135.1
PRCTRVLY
137.0
SOUTHBAY
69.08
SOUTHBY1
18.00
SOUTHBGT
12.20
TELECYN
136.7
SOUTHBY2
17.64
UPTOWN
135.3
MISSION
226.6
SOUTHBAY
135.4
OLD TOWN
227.0
OLDTWNTP
226.9
SILVERGT
226.9
SOUTHBY3
18.00
SOUTHBAY
228.2
Fri Apr 22 15:19:14 2005
Contingency: Escondido to EPP tie line
Overload: 2 TL's from Sycamore 138 & Sycamore 230
PSLF Program
post.drw
Rating =2
post_alt6.sav
2010 Base Case, with South Bay Repower
SDG&E for Duke Energy
South Bay @ 650; Enpex @750

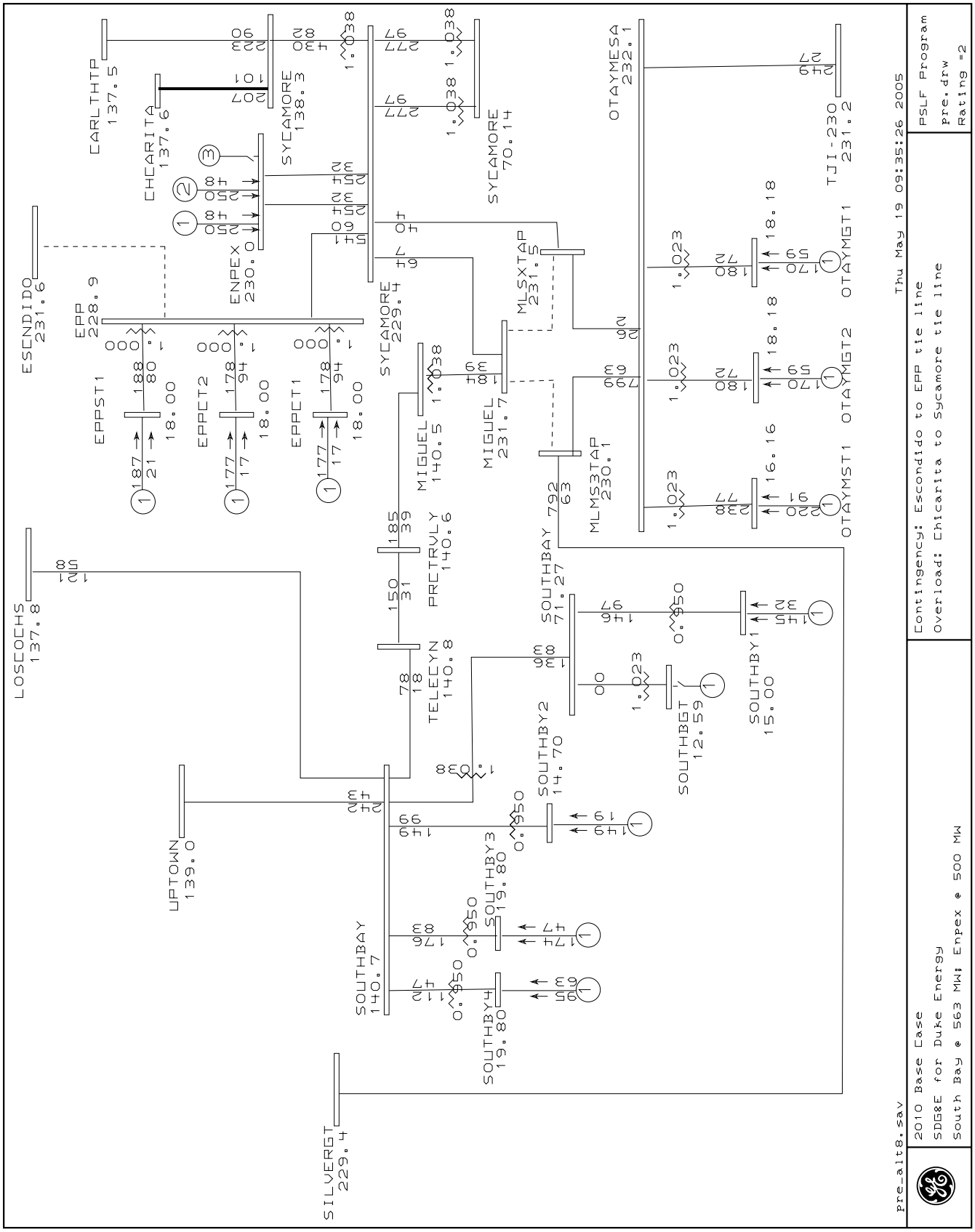
EARLTHTP 137.5
CHCARITA 137.6
SYCAMORE 138.3
SYCAMORE 70.14
OTAYMESA 232.1
TJI-230 231.2
ESCNDIDO 231.6
ENPEX 230.0
EPP 228.9
SYCAMORE 229.4
MLSXTAP 231.5
EPPST1
EPPCT2
EPPCT1
MIGUEL 140.5
MIGUEL 231.7
MLMS3TAP 230.1
OTAYMGT1
OTAYMGT2
OTAYMST1
PRCTRVLY 140.6
SOUTHBAY 71.27
LOSCOCHS 137.8
TELECYN 140.8
SOUTHBY2 14.70
SOUTHBY1 15.00
SOUTHBGT 12.59
UPTOWN 139.0
SOUTHBY3 19.80
SOUTHBAY 140.7
SOUTHBY4 19.80
SILVERGT 229.4
Thu May 19 09:35:26 2005
Contingency: Escondido to EPP tie line
Overload: Chicarita to Sycamore tie line
PSLF Program
pre.drw
Rating =2
pre_alt8.sav
2010 Base Case
SDG&E for Duke Energy
South Bay @ 563 MW; Enpex @ 500 MW

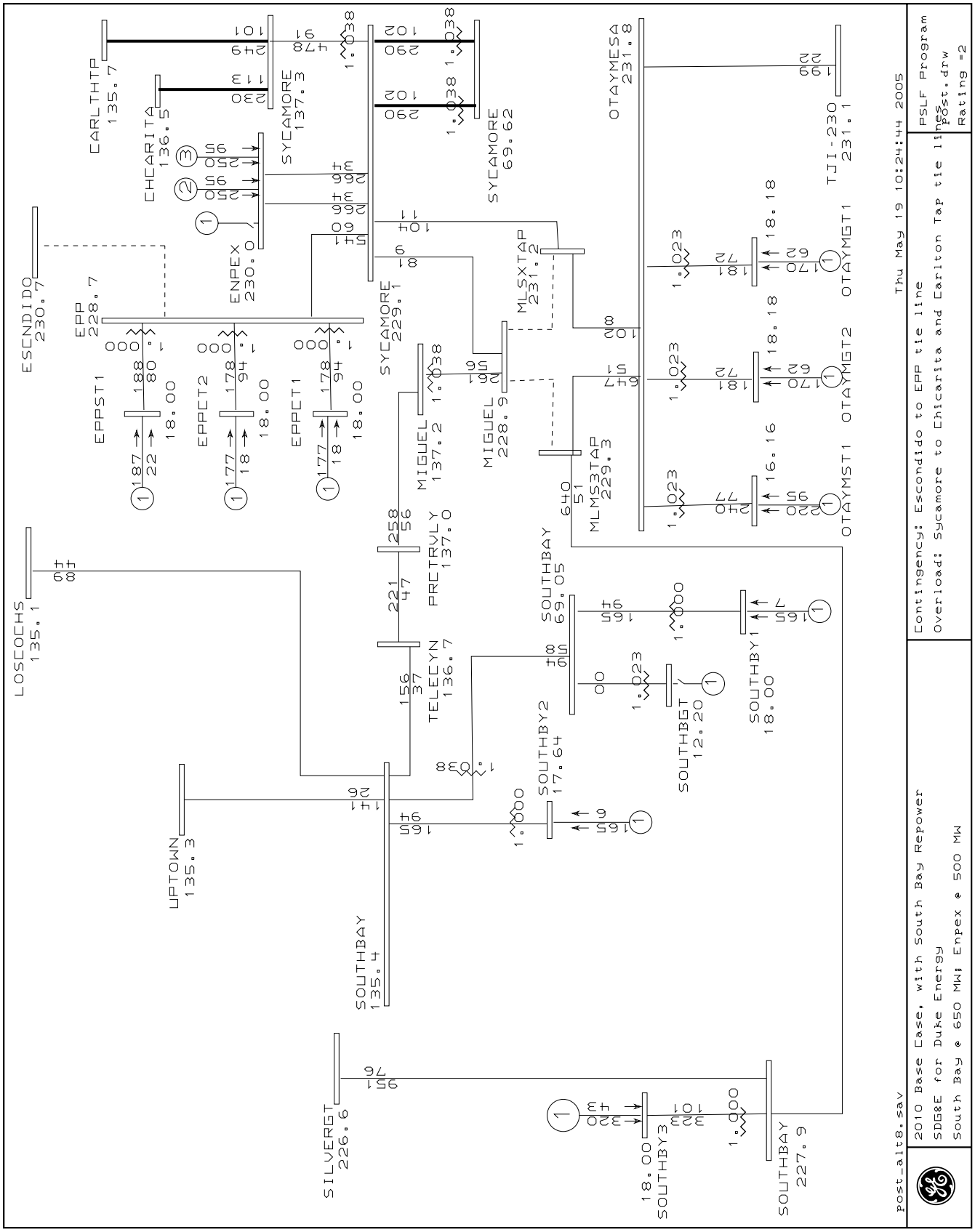
CARLTHTP 135.7
CHCARITA 136.5
SYCAMORE 137.3
SYCAMORE 69.62
OTAYMESA 231.8
TJI-230 231.1
ESCNDIDO 230.7
EPP 228.7
ENPEX 230.0
SYCAMORE 229.1
MLSXTAP 231.2
EPPST1 18.00
EPPCT2 18.00
EPPCT1 18.00
MIGUEL 137.2
MIGUEL 228.9
MLMS3TAP 229.3
OTAYMST1 OTAYMGT1 OTAYMGT2
LOSCOCHS 135.1
PRCTRVLY 137.0
TELECYN 136.7
SOUTHBAY 69.05
SOUTHBY1 18.00
SOUTHBGT 12.20
SOUTHBY2 17.64
UPTOWN 135.3
SOUTHBAY 135.4
SILVERGT 226.6
SOUTHBY3 18.00
SOUTHBAY 227.9
Thu May 19 10:24:44 2005
PSLF Program
post.drw
Rating =2
Contingency: Escondido to EPP tie line
Overload: Sycamore to Chicarita and Carlton Tap tie lines
post_alt8.sav
2010 Base Case, with South Bay Repower
SDG&E for Duke Energy
South Bay @ 650 MW; Enpex @ 500 MW

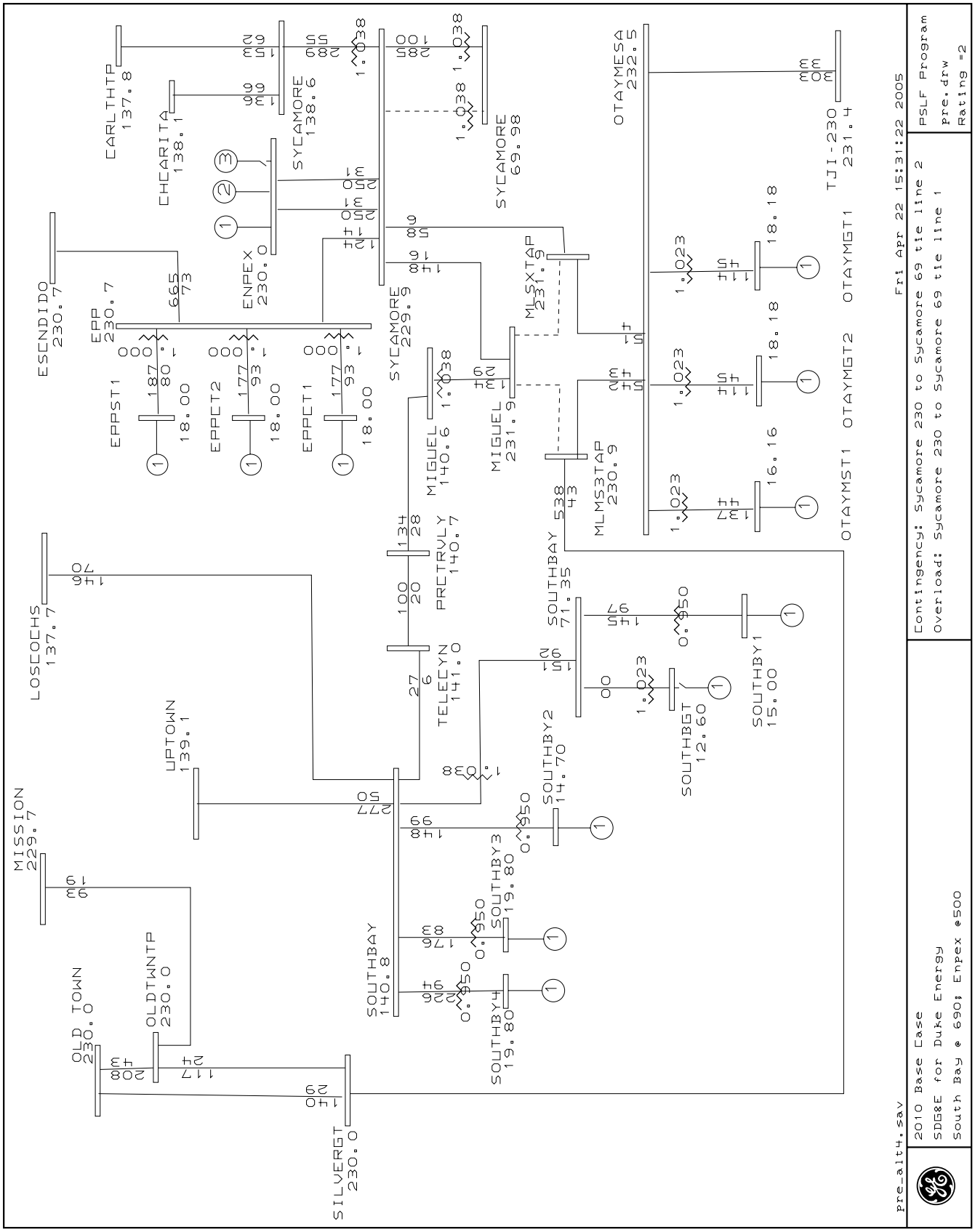
CARLTHTP 137.8
CHCARITA 138.1
SYCAMORE 138.6
SYCAMORE 69.98
OTAYMESA 232.5
TJI-230 231.4
ESCNDIDO 230.7
EPP 230.7
ENPEX 230.0
SYCAMORE 229.9
MLSXTAP 231.9
EPPST1 18.00
EPPCT2 18.00
EPPCT1 18.00
MIGUEL 140.6
MIGUEL 231.9
MLMS3TAP 230.9
OTAYMGT1 18.18
OTAYMGT2 18.18
OTAYMST1 16.16
LOSCOCHS 137.7
PRCTRVLY 140.7
SOUTHBAY 71.35
TELECYN 141.0
SOUTHBY1 15.00
SOUTHBGT 12.60
SOUTHBY2 14.70
UPTOWN 139.1
MISSION 229.7
SOUTHBAY 140.8
SOUTHBY3 19.80
SOUTHBY4 19.80
OLD TOWN 230.0
OLDTWNTP 230.0
SILVERGT 230.0
Fri Apr 22 15:31:22 2005
PSLF Program
pre.drw
Rating =2
Contingency: Sycamore 230 to Sycamore 69 tie line 2
Overload: Sycamore 230 to Sycamore 69 tie line 1
pre_alt4.sav
2010 Base Case
SDG&E for Duke Energy
South Bay @ 690; Enpex @500

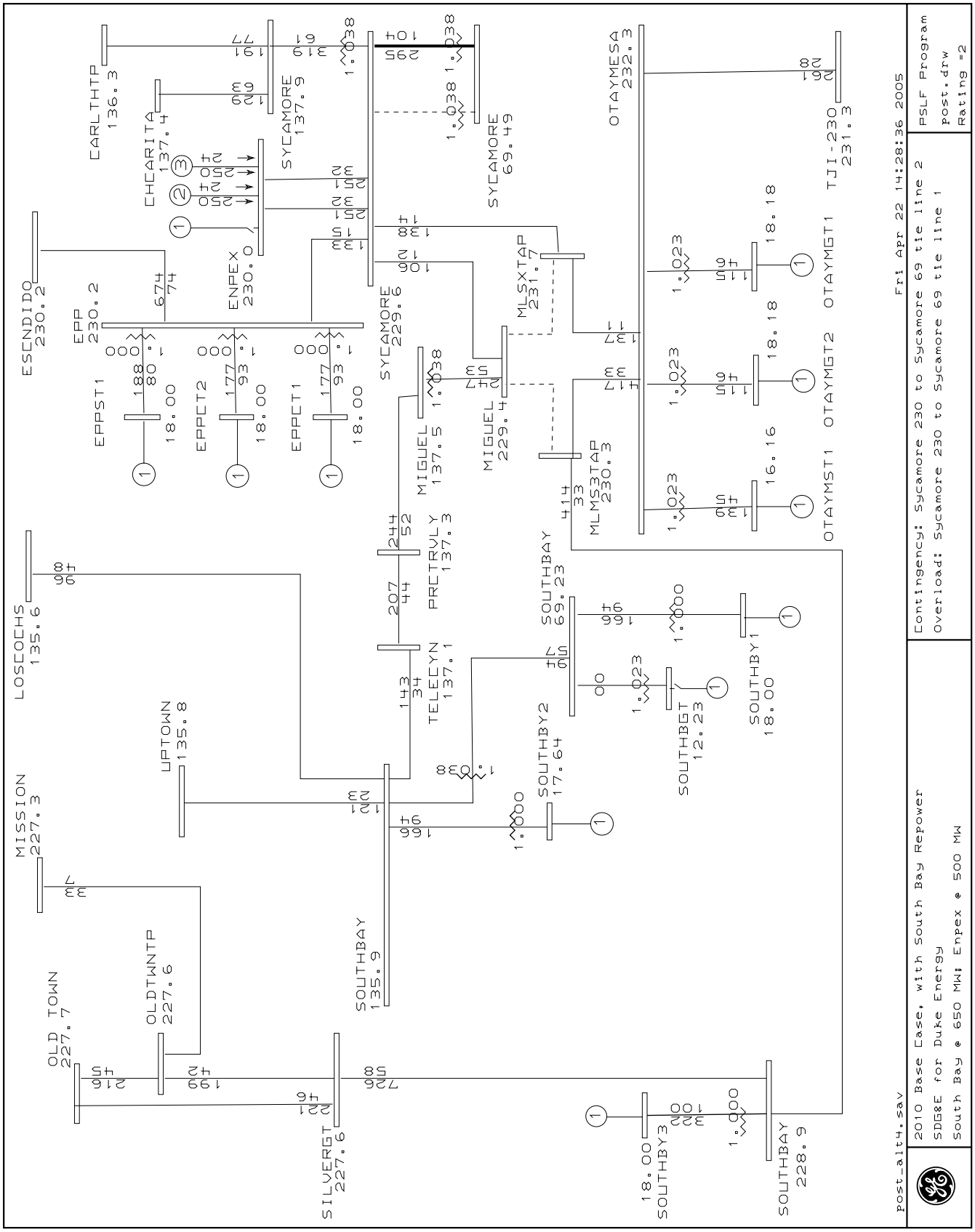
CARLTHTP
136.3
CHCARITA
137.4
SYCAMORE
137.9
SYCAMORE
69.49
OTAYMESA
232.3
TJI-230
231.3
ESCNDIDO
230.2
EPP
230.2
ENPEX
230.0
SYCAMORE
229.6
MLSXTAP
231.7
EPPST1
18.00
EPPCT2
18.00
EPPCT1
18.00
MIGUEL
137.5
MIGUEL
229.4
MLMS3TAP
230.3
OTAYMGT1
18.18
OTAYMGT2
18.18
OTAYMST1
16.16
Fri Apr 22 14:28:36 2005
PSLF Program
post.drw
Rating =2
Contingency: Sycamore 230 to Sycamore 69 tie line 2
Overload: Sycamore 230 to Sycamore 69 tie line 1
LOSCOCHS
135.6
PRCTRVLY
137.3
SOUTHBAY
69.23
SOUTHBY1
18.00
SOUTHBGT
12.23
TELECYN
137.1
SOUTHBY2
17.64
UPTOWN
135.8
MISSION
227.3
SOUTHBAY
135.9
OLDTWNTP
227.6
OLD TOWN
227.7
SILVERGT
227.6
SOUTHBY3
18.00
SOUTHBAY
228.9
post_alt4.sav
2010 Base Case, with South Bay Repower
SDG&E for Duke Energy
South Bay @ 650 MW; Enpex @ 500 MW

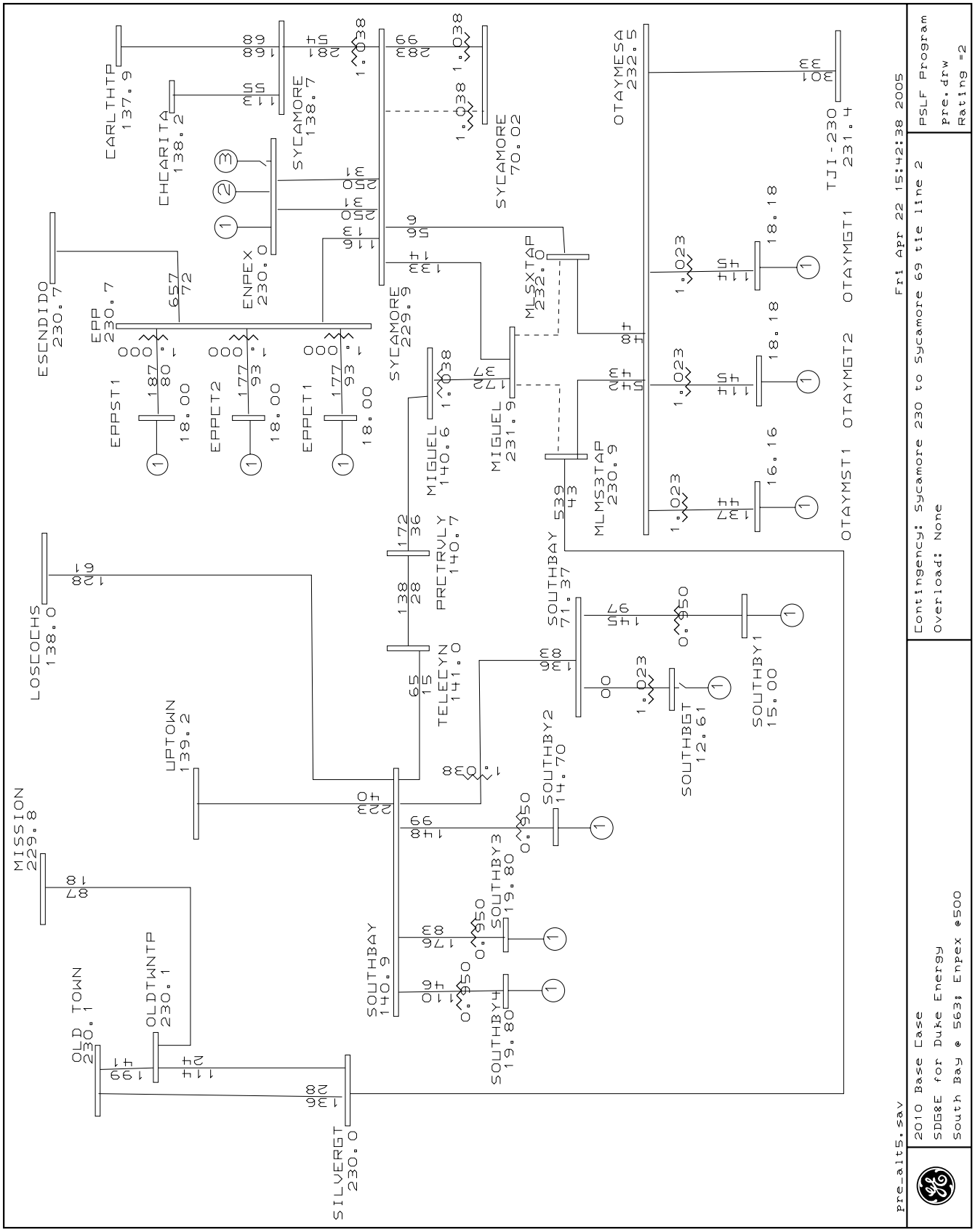
CARLTHTP 137.9
CHCARITA 138.2
SYCAMORE 138.7
ENPEX 230.0
SYCAMORE 70.02
OTAYMESA 232.5
TJI-230 231.4
ESCNDIDO 230.7
EPP 230.7
EPPST1 18.00
EPPCT2 18.00
EPPCT1 18.00
SYCAMORE 229.9
MLSXTAP 232.0
MIGUEL 140.6
MIGUEL 231.9
MLMS3TAP 230.9
OTAYMST1 OTAYMGT1
OTAYMST1 OTAYMGT2
LOSCOCHS 138.0
PRCTRVLY 140.7
SOUTHBAY 71.37
TELECYN 141.0
SOUTHBY1 15.00
SOUTHBGT 12.61
SOUTHBY2 14.70
UPTOWN 139.2
MISSION 229.8
SOUTHBY3 19.80
SOUTHBAY 140.9
SOUTHBY4 19.80
OLD TOWN 230.1
OLDTWNTP 230.1
SILVERGT 230.0
Fri Apr 22 15:42:38 2005
Contingency: Sycamore 230 to Sycamore 69 tie line 2
Overload: None
PSLF Program
pre.drw
Rating =2
2010 Base Case
SDG&E for Duke Energy
South Bay @ 563; Enpex @500
pre_alt5.sav

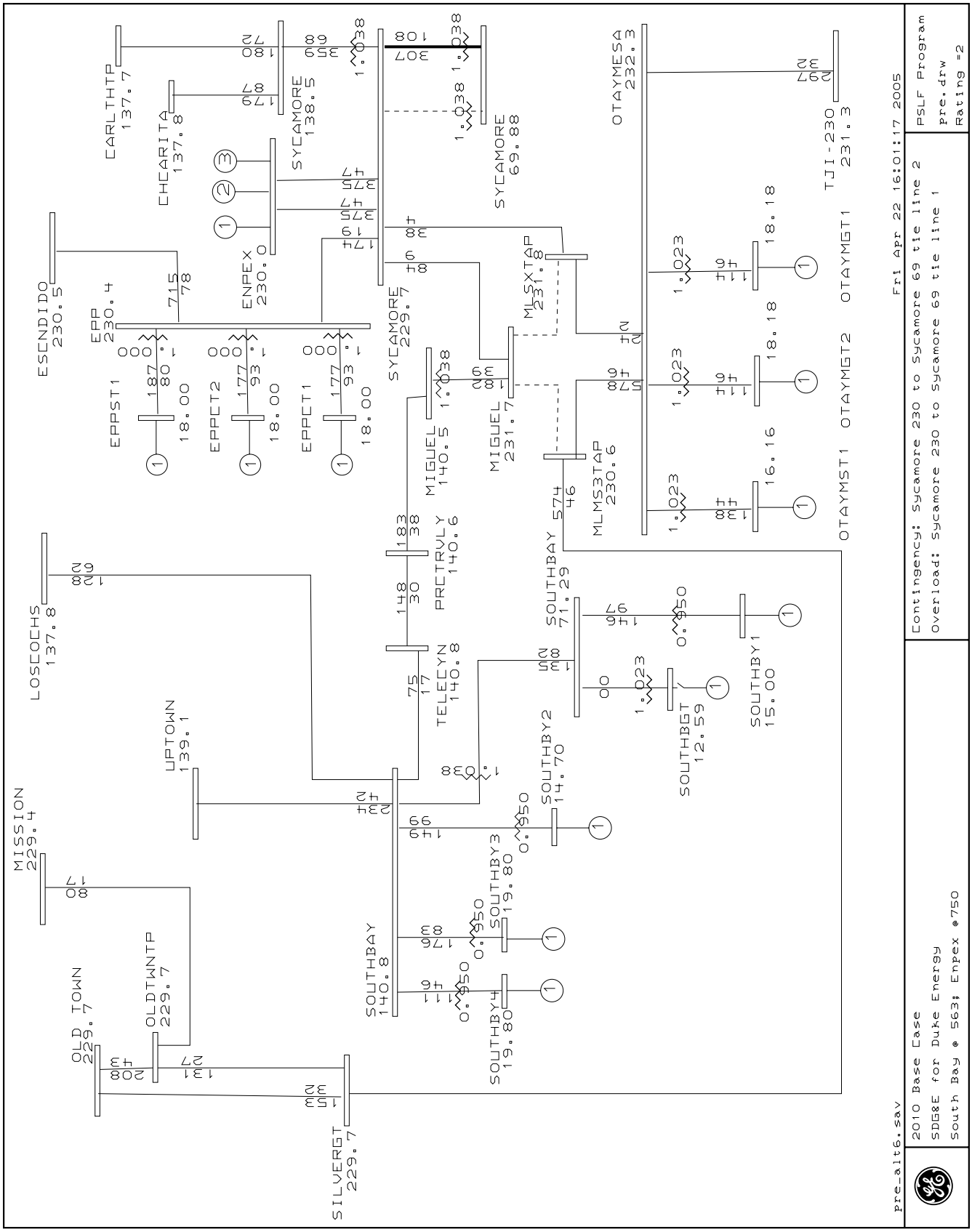
CARLTHTP 137.7
CHCARITA 137.8
SYCAMORE 138.5
SYCAMORE 69.88
OTAYMESA 232.3
TJI-230 231.3
ESCNDIDO 230.5
EPP 230.4
ENPEX 230.0
SYCAMORE 229.7
MLSXTAP 231.8
EPPST1
EPPCT2
EPPCT1
MIGUEL 140.5
MIGUEL 231.7
MLMS3TAP 230.6
OTAYMST1
OTAYMGT2
OTAYMGT1
LOSCOCHS 137.8
PRCTRVLY 140.6
SOUTHBAY 71.29
TELECYN 140.8
SOUTHBY2 14.70
SOUTHBGT 12.59
SOUTHBY1 15.00
UPTOWN 139.1
MISSION 229.4
SOUTHBAY 140.8
SOUTHBY3 19.80
SOUTHBY4 19.80
OLD TOWN 229.7
OLDTWNTP 229.7
SILVERGT 229.7
Fri Apr 22 16:01:17 2005
Contingency: Sycamore 230 to Sycamore 69 tie line 2
Overload: Sycamore 230 to Sycamore 69 tie line 1
PSLF Program
pre.drw
Rating =2
2010 Base Case
SDG&E for Duke Energy
South Bay @ 563; Enpex @750
pre_alt6.sav

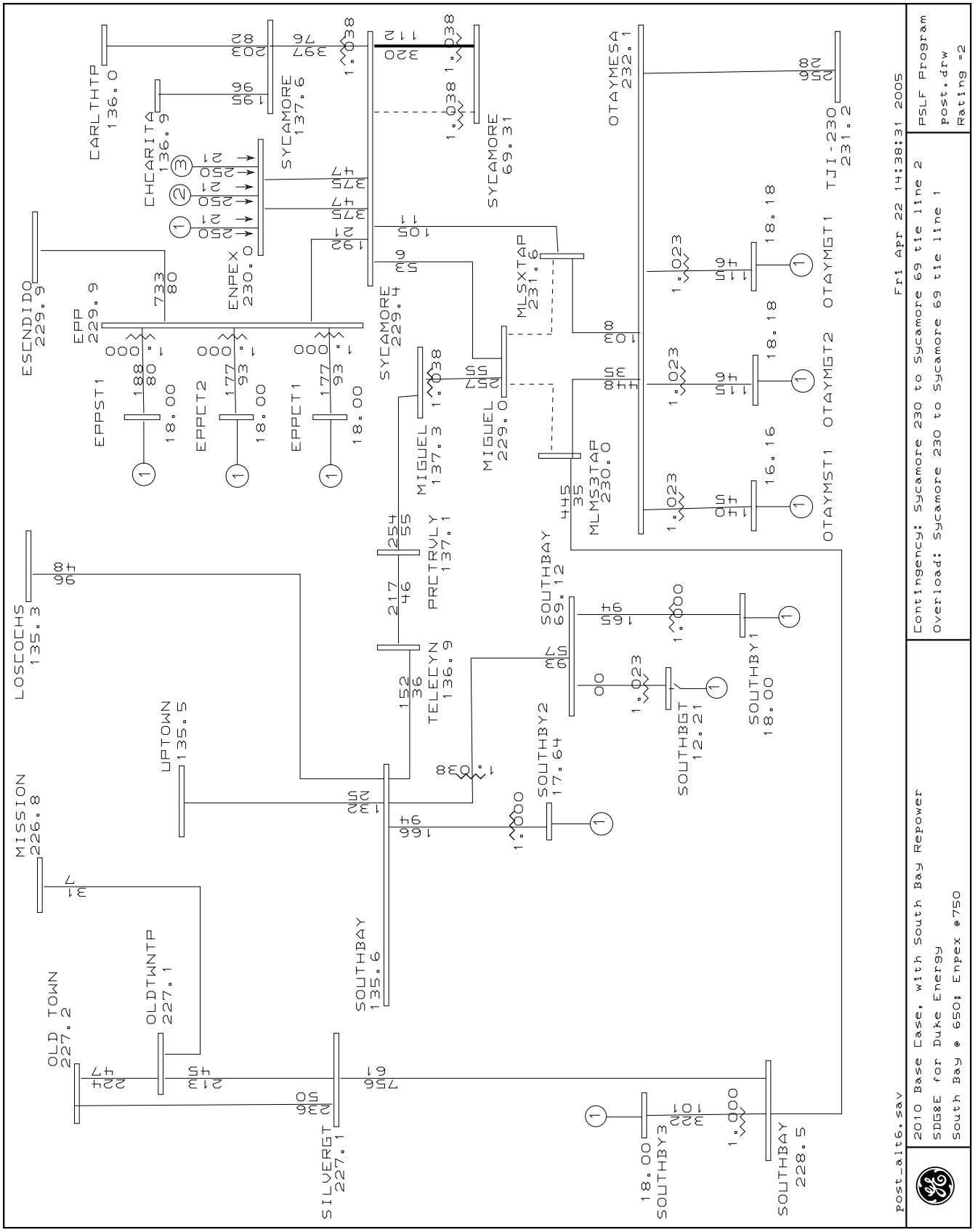
CARLTHTP
136.0
CHCARITA
136.9
SYCAMORE
137.6
SYCAMORE
69.31
OTAYMESA
232.1
TJI-230
231.2
ESCNDIDO
229.9
EPP
229.9
ENPEX
230.0
SYCAMORE
229.4
MLSXTAP
231.6
EPPST1
EPPCT2
EPPCT1
MIGUEL
137.3
MIGUEL
229.0
MLMS3TAP
230.0
OTAYMGT1
OTAYMGT2
OTAYMST1
LOSCOCHS
135.3
PRETRVLY
137.1
SOUTHBAY
69.12
TELEGYN
136.9
SOUTHBY1
SOUTHBGT
12.21
SOUTHBY2
17.64
UPTOWN
135.5
MISSION
226.8
SOUTHBAY
135.6
OLD TOWN
227.2
OLDTWNTP
227.1
SILVERGT
227.1
SOUTHBY3
SOUTHBAY
228.5
Fri Apr 22 14:38:31 2005
PSLF Program
post.drw
Rating =2
Contingency: Sycamore 230 to Sycamore 69 tie line 2
Overload: Sycamore 230 to Sycamore 69 tie line 1
2010 Base Case, with South Bay Repower
SDG&E for Duke Energy
South Bay @ 650; Enpex @750
post_alt6.sav

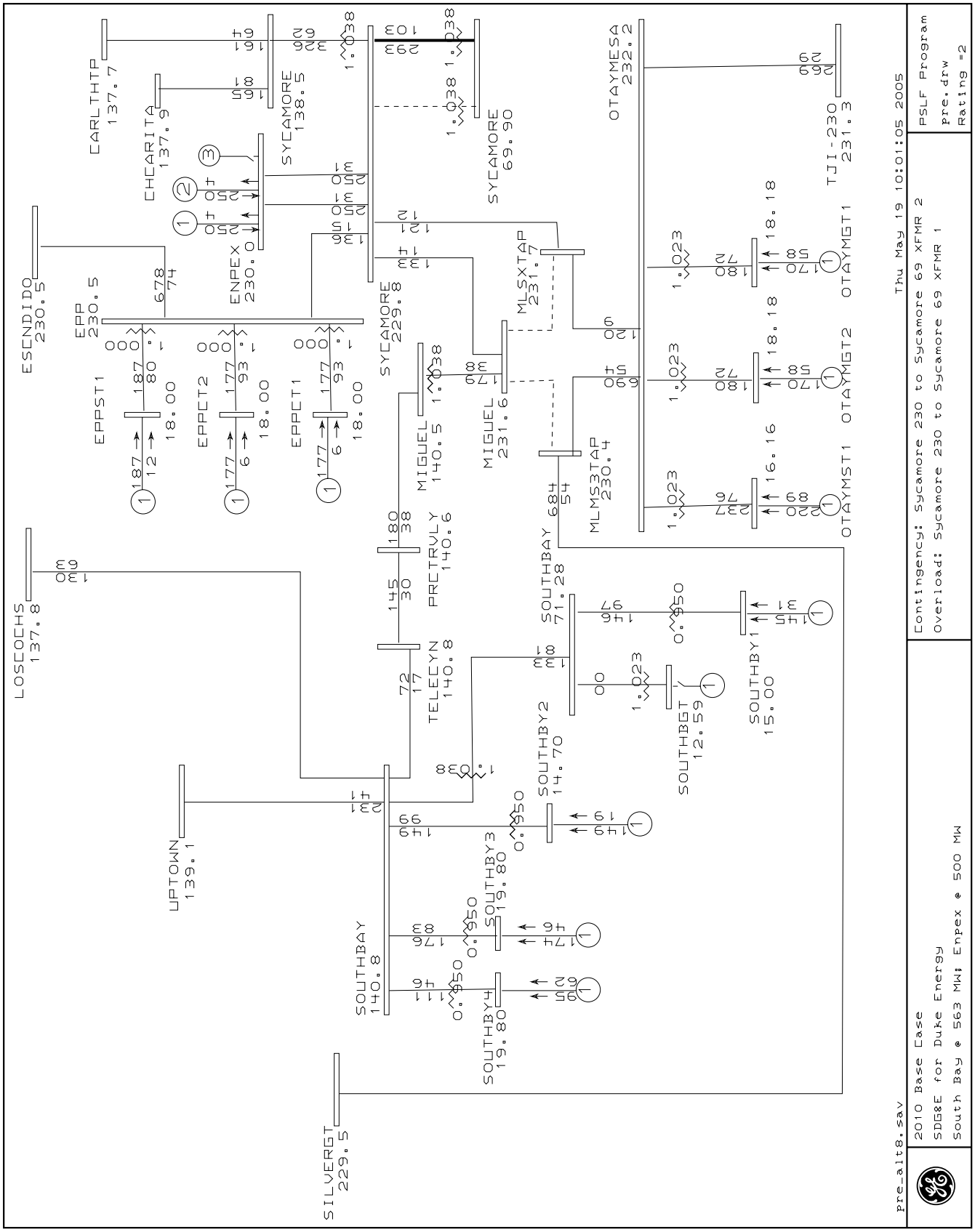
CARLTHTP
137.7
CHCARITA
137.9
SYCAMORE
138.5
SYCAMORE
69.90
OTAYMESA
232.2
TJI-230
231.3
ESCNDIDO
230.5
EPP
230.5
ENPEX
230.0
SYCAMORE
229.8
MLSXTAP
231.7
EPPST1
18.00
EPPCT2
18.00
EPPCT1
18.00
MIGUEL
140.5
MIGUEL
231.6
MLMS3TAP
230.4
OTAYMGT1
OTAYMGT2
OTAYMST1
LOSCOCHS
137.8
PRCTRVLY
140.6
TELECYN
140.8
SOUTHBAY
71.28
SOUTHBY1
15.00
SOUTHBGT
12.59
SOUTHBY2
14.70
UPTOWN
139.1
SOUTHBAY
140.8
SOUTHBY3
19.80
SOUTHBY4
19.80
SILVERGT
229.5
Thu May 19 10:01:05 2005
Contingency: Sycamore 230 to Sycamore 69 XFMR 2
Overload: Sycamore 230 to Sycamore 69 XFMR 1
PSLF Program
pre.drw
Rating =2
pre_alt8.sav
2010 Base Case
SDG&E for Duke Energy
South Bay @ 563 MW; Enpex @ 500 MW

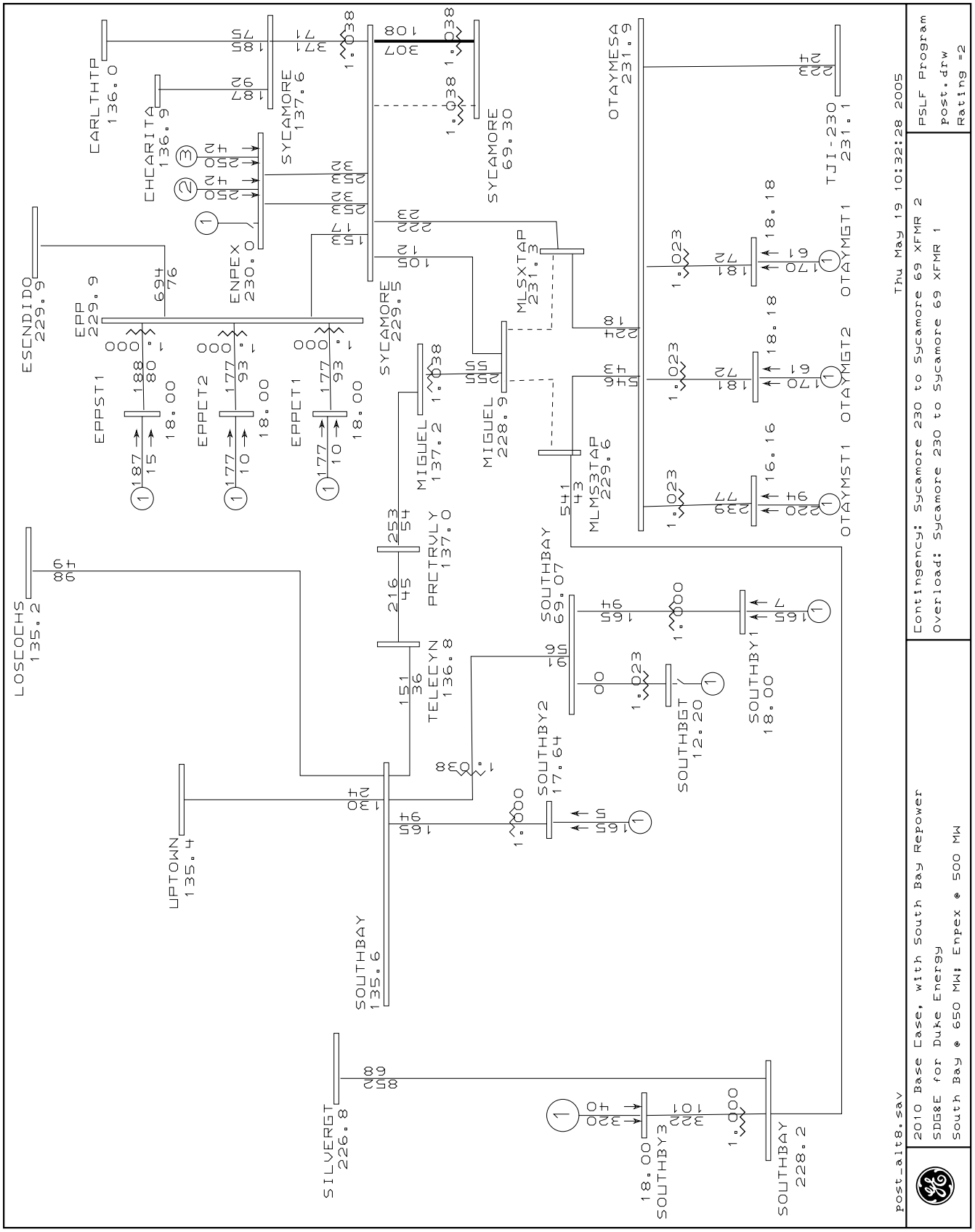
EARLTHTP
136.0
CHEARITA
136.9
SYCAMORE
137.6
SYCAMORE
69.30
OTAYMESA
231.9
TJI-230
231.1
ESCNDIDO
229.9
EPP
229.9
ENPEX
230.0
SYCAMORE
229.5
MLSXTAP
231.3
OTAYMGT1
OTAYMGT2
OTAYMST1
EPPST1
EPPCT2
EPPCT1
MIGUEL
137.2
MIGUEL
228.9
MLMS3TAP
229.6
PRCTRVLY
137.0
SOUTHBAY
69.07
LOSCOCHS
135.2
TELECYN
136.8
SOUTHBY2
17.64
SOUTHBGT
12.20
SOUTHBY1
18.00
UPTOWN
135.4
SOUTHBAY
135.6
SILVERGT
226.8
SOUTHBY3
18.00
SOUTHBAY
228.2
Thu May 19 10:32:28 2005
PSLF Program
post.drw
Rating =2
Contingency: Sycamore 230 to Sycamore 69 XFMR 2
Overload: Sycamore 230 to Sycamore 69 XFMR 1
post_alt8.sav
2010 Base Case, with South Bay Repower
SDG&E for Duke Energy
South Bay @ 650 MW; Enpex @ 500 MW

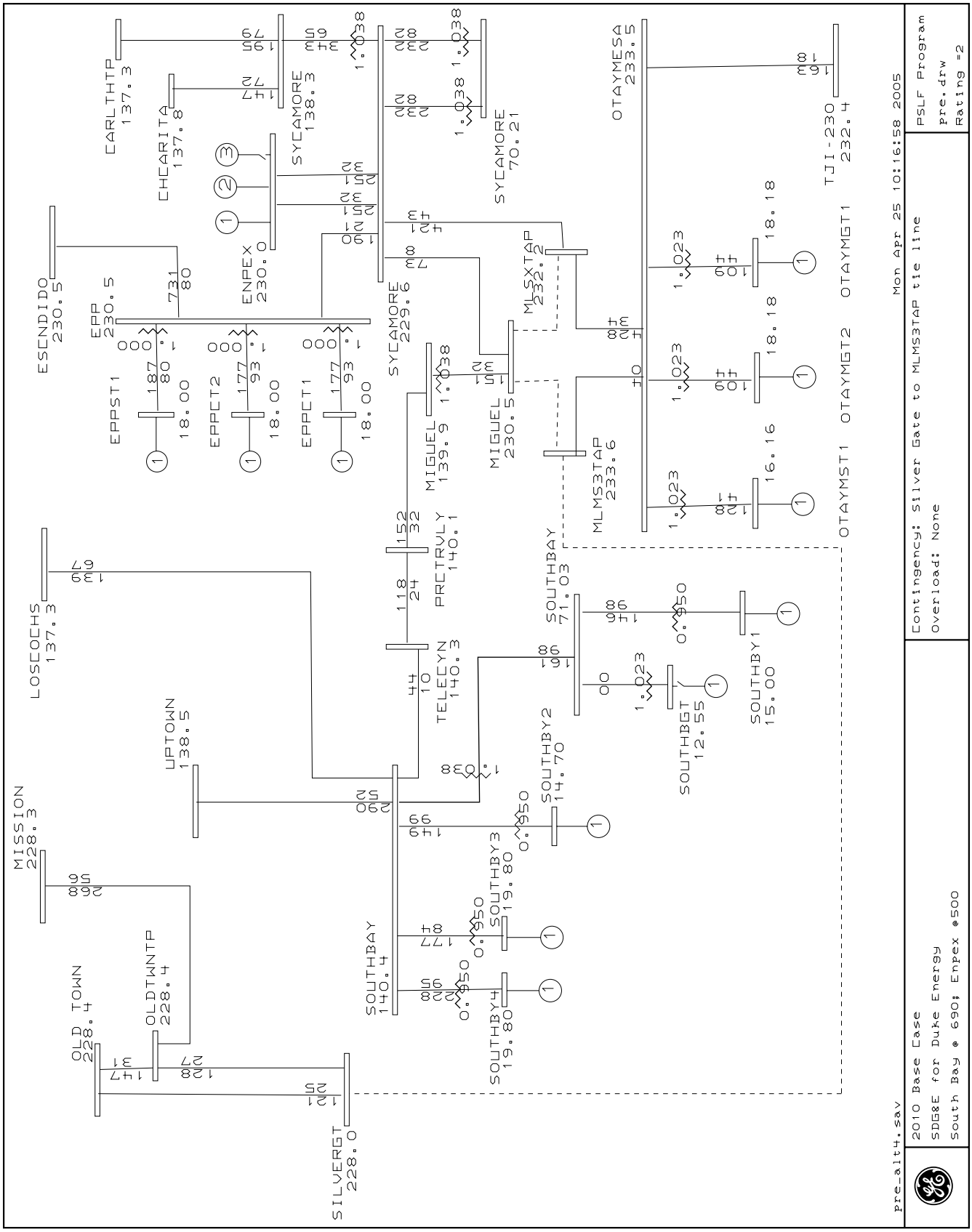
CARLTHTP 137.3
CHCARITA 137.8
SYCAMORE 138.3
ENPEX 230.0
SYCAMORE 229.6
SYCAMORE 70.21
OTAYMESA 233.5
TJI-230 232.4
ESCNDIDO 230.5
EPP 230.5
EPPST1 18.00
EPPCT2 18.00
EPPCT1 18.00
MLSXTAP 232.2
MIGUEL 139.9
MIGUEL 230.5
MLMS3TAP 233.6
OTAYMGT1 18.18
OTAYMGT2 18.18
OTAYMST1 16.16
LOSCOCHS 137.3
PRCTRVLY 140.1
TELECYN 140.3
SOUTHBAY 71.03
SOUTHBY1 15.00
SOUTHBGT 12.55
SOUTHBY2 14.70
SOUTHBY3 19.80
SOUTHBY4 19.80
SOUTHBAY 140.4
UPTOWN 138.5
MISSION 228.3
OLD TOWN 228.4
OLDTWNTP 228.4
SILVERGT 228.0
Mon Apr 25 10:16:58 2005
PSLF Program
pre.drw
Rating =2
Contingency: Silver Gate to MLMS3TAP tie line
Overload: None
2010 Base Case
SDG&E for Duke Energy
South Bay @ 690; Enpex @500
pre_alt4.sav

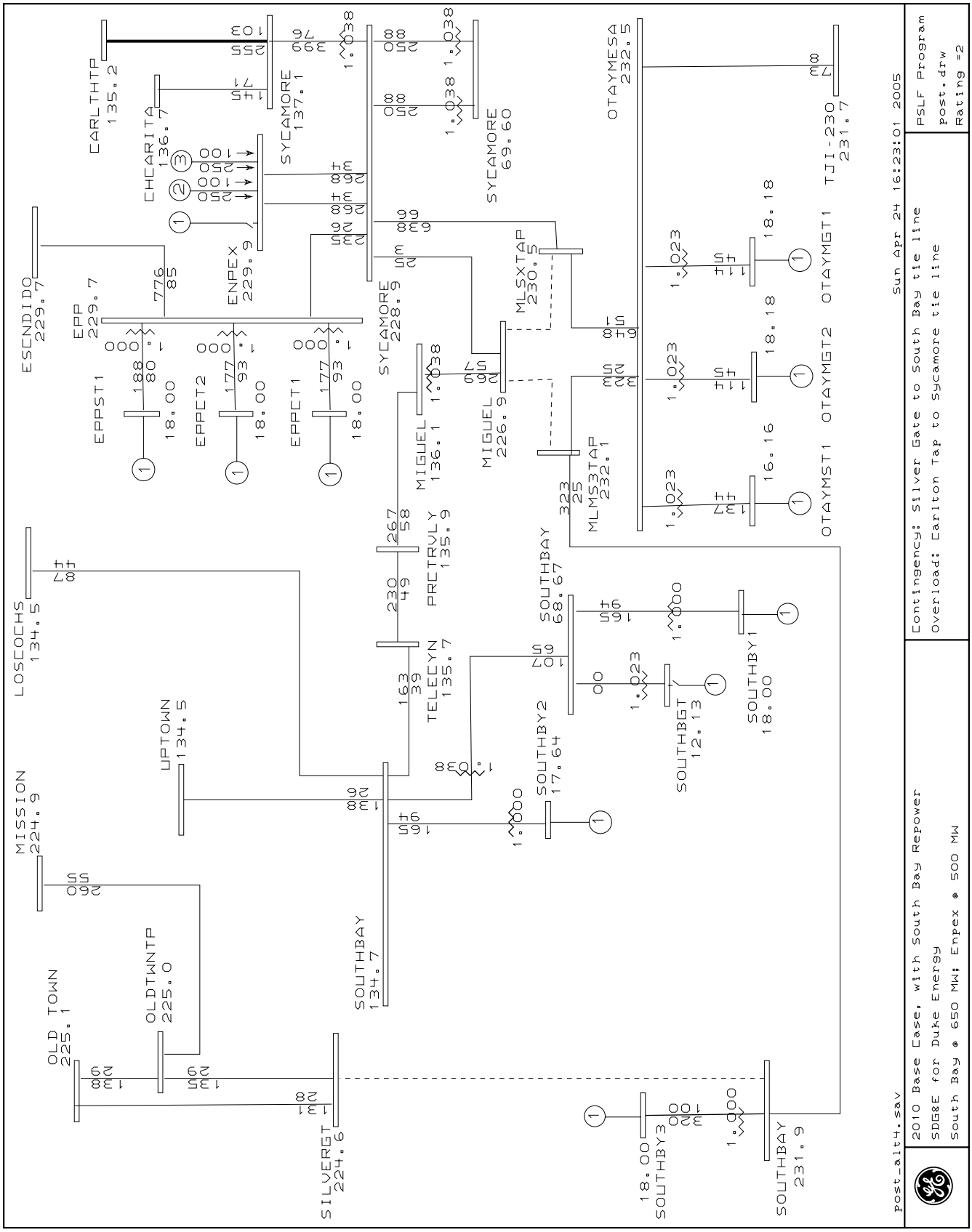
post_alt4.sav
2010 Base Case, with South Bay Repower
SDG&E for Duke Energy
South Bay @ 650 MW; Enpex @ 500 MW
Contingency: Silver Gate to South Bay tie line
Overload: Carlton Tap to Sycamore tie line
Sun Apr 24 16:23:01 2005
PSLF Program
post.drw
Rating =2
CARLTHTP 135.2
CHEARITA 136.7
SYCAMORE 137.1
SYCAMORE 69.60
OTAYMESA 232.5
TJI-230 231.7
ESCNDIDO 229.7
EPP 229.7
ENPEX 229.9
SYCAMORE 228.9
MLSXTAP 230.5
EPPST1 18.00
EPPCT2 18.00
EPPCT1 18.00
MIGUEL 136.1
MIGUEL 226.9
MLMS3TAP 232.1
OTAYMGT1 18.18
OTAYMGT2 18.18
OTAYMST1 16.16
LOSCOCHS 134.5
PRCTRVLY 135.9
SOUTHBAY 68.67
TELECYN 135.7
SOUTHBY2 17.64
SOUTHBGT 12.13
SOUTHBY1 18.00
UPTOWN 134.5
MISSION 224.9
SOUTHBAY 134.7
OLD TOWN 225.1
OLDTWNTP 225.0
SILVERGT 224.6
SOUTHBY3 18.00
SOUTHBAY 231.9

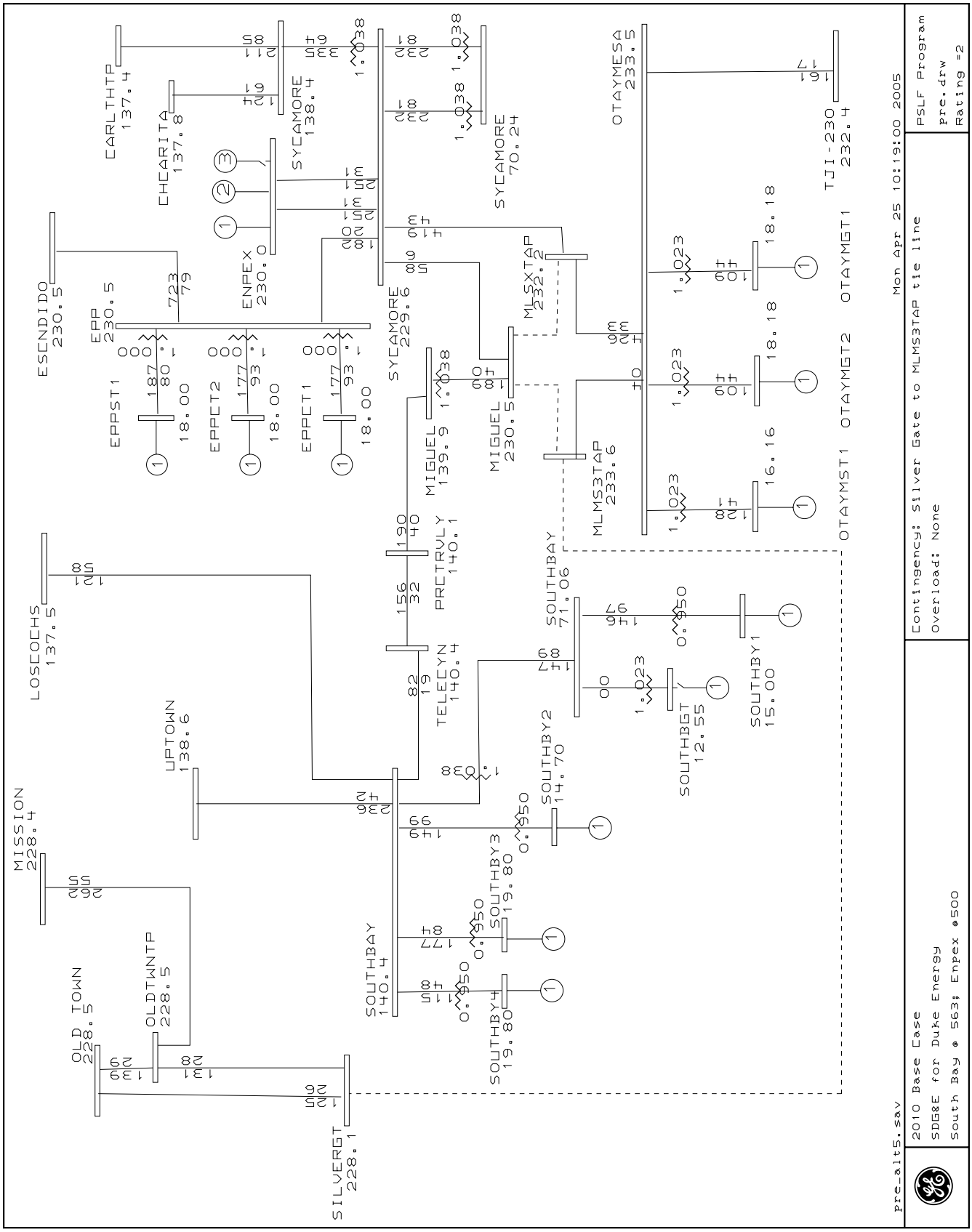
CARLTHTP
137.4
CHCARITA
137.8
SYCAMORE
138.4
SYCAMORE
70.24
OTAYMESA
233.5
TJI-230
232.4
ESCNDIDO
230.5
EPP
230.5
ENPEX
230.0
SYCAMORE
229.6
MLSXTAP
232.2
EPPST1
EPPCT2
EPPCT1
MIGUEL
139.9
MIGUEL
230.5
MLMS3TAP
233.6
OTAYMST1
OTAYMGT2
OTAYMGT1
LOSCOCHS
137.5
PRCTRVLY
140.1
TELECYN
140.4
SOUTHBAY
71.06
SOUTHBY1
15.00
SOUTHBGT
12.55
SOUTHBY2
14.70
UPTOWN
138.6
MISSION
228.4
SOUTHBAY
140.4
SOUTHBY3
19.80
SOUTHBY4
19.80
OLD TOWN
228.5
OLDTWNTP
228.5
SILVERGT
228.1
Mon Apr 25 10:19:00 2005
PSLF Program
pre.drw
Rating =2
Contingency: Silver Gate to MLMS3TAP tie line
Overload: None
pre_alt5.sav
2010 Base Case
SDG&E for Duke Energy
South Bay @ 563; Enpex @500

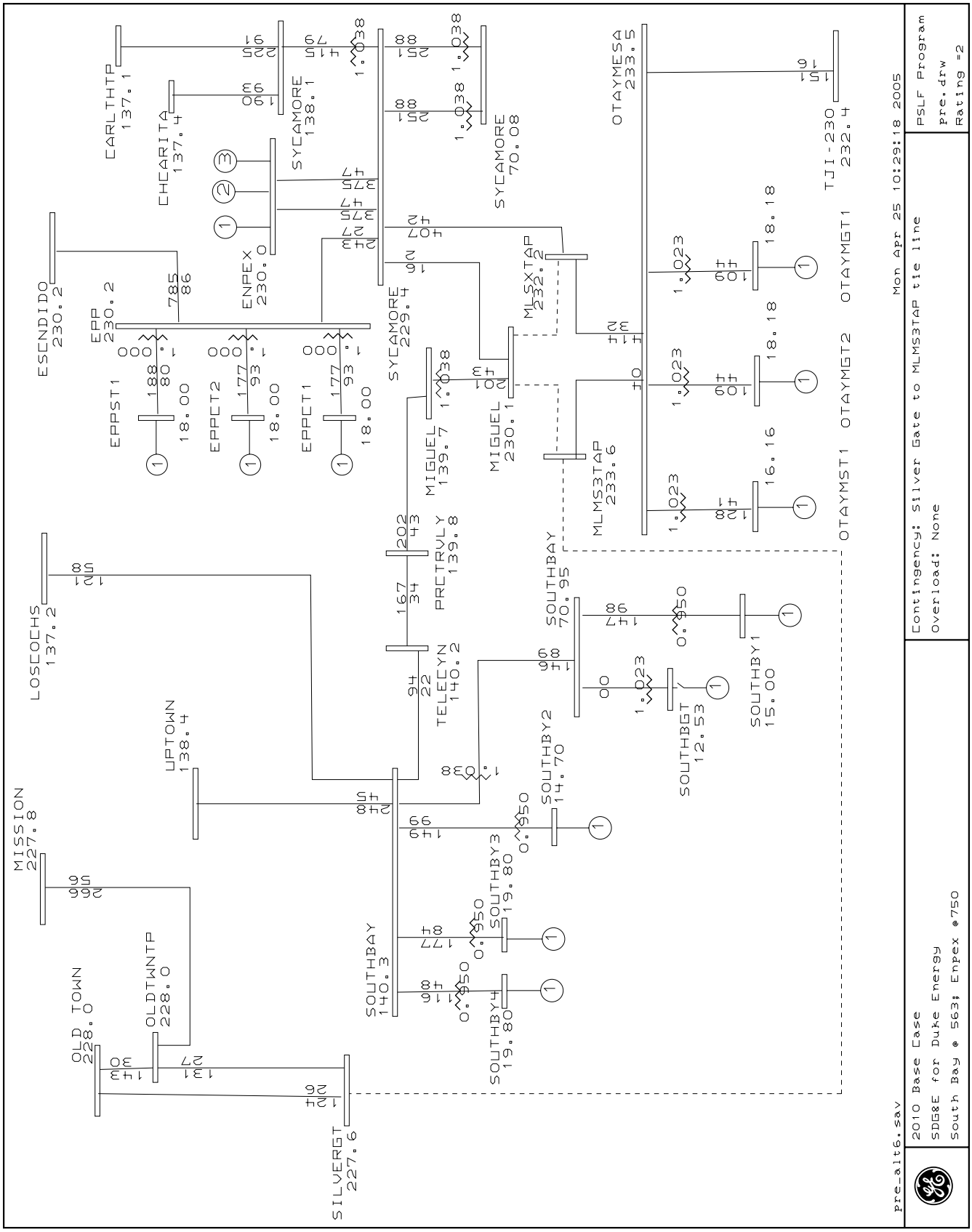
CARLTHTP 137.1
CHCARITA 137.4
SYCAMORE 138.1
SYCAMORE 70.08
OTAYMESA 233.5
TJI-230 232.4
ESCNDIDO 230.2
EPP 230.2
ENPEX 230.0
SYCAMORE 229.4
MLSXTAP 232.2
EPPST1 18.00
EPPCT2 18.00
EPPCT1 18.00
MIGUEL 139.7
MIGUEL 230.1
MLMS3TAP 233.6
OTAYMST1 16.16
OTAYMGT2 18.18
OTAYMGT1 18.18
LOSCOCHS 137.2
PRCTRVLY 139.8
TELECYN 140.2
SOUTHBAY 70.95
SOUTHBY1 15.00
SOUTHBGT 12.53
SOUTHBY2 14.70
UPTOWN 138.4
MISSION 227.8
SOUTHBAY 140.3
SOUTHBY3 19.80
SOUTHBY4 19.80
OLD TOWN 228.0
OLDTWNTP 228.0
SILVERGT 227.6
Mon Apr 25 10:29:18 2005
PSLF Program
pre.drw
Rating =2
Contingency: Silver Gate to MLMS3TAP tie line
Overload: None
pre_alt6.sav
2010 Base Case
SDG&E for Duke Energy
South Bay @ 563; Enpex @750

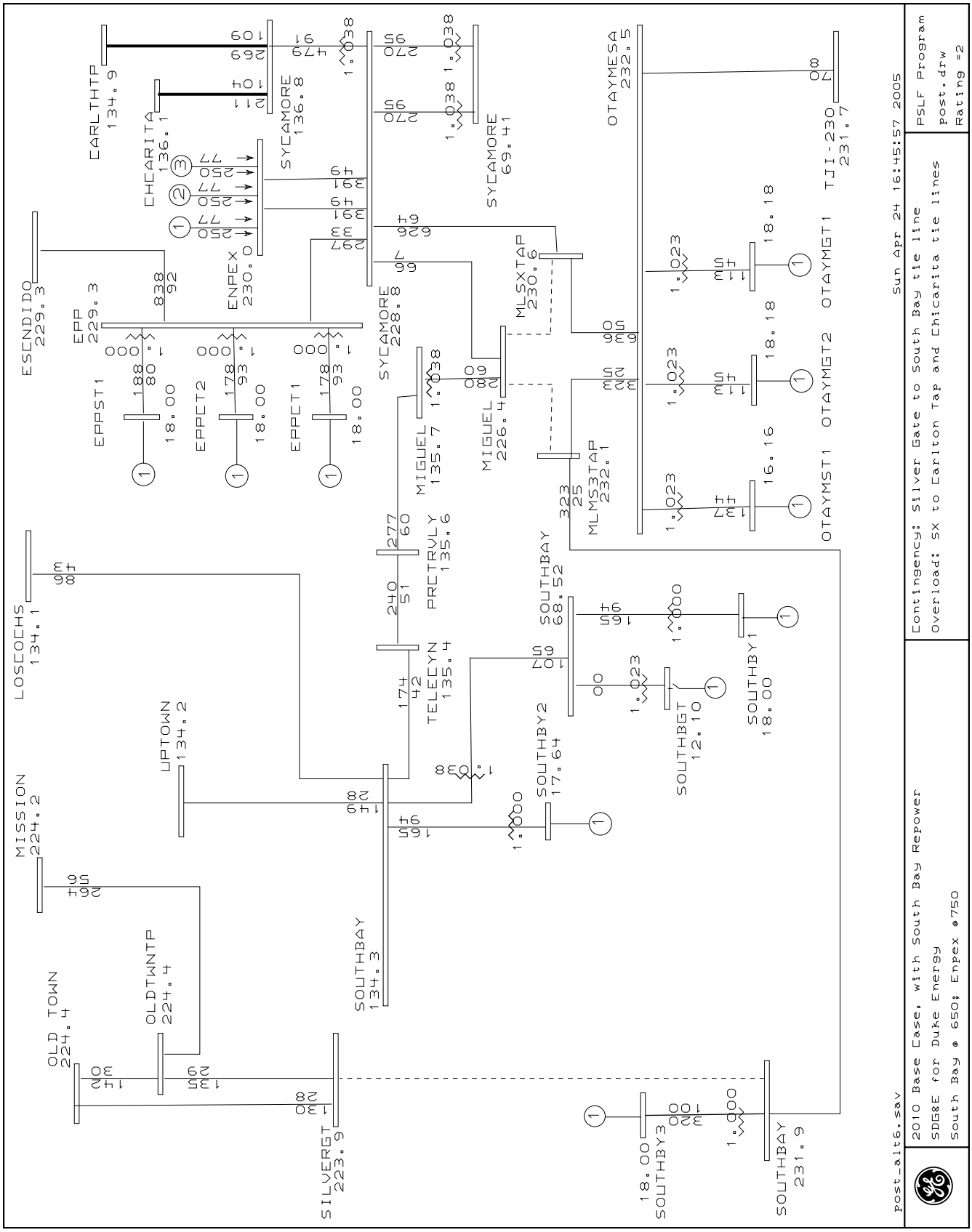
2010 Base Case, with South Bay Repower
SDG&E for Duke Energy
South Bay @ 650; Enpex @750
Contingency: Silver Gate to South Bay tie line
Overload: SX to Carlton Tap and Chicarita tie lines
PSLF Program
post.drw
Rating =2
Sun Apr 24 16:45:57 2005
post_alt6.sav
CARLTHTP 134.9
CHICARITA 136.1
SYCAMORE 136.8
SYCAMORE 69.41
OTAYMESA 232.5
TJI-230 231.7
ESCNDIDO 229.3
EPP 229.3
ENPEX 230.0
SYCAMORE 228.8
MLSXTAP 230.6
EPPST1 18.00
EPPCT2 18.00
EPPCT1 18.00
MIGUEL 135.7
MIGUEL 226.4
MLMS3TAP 232.1
OTAYMGT1 18.18
OTAYMGT2 18.18
OTAYMST1 16.16
LOSCOCHS 134.1
PRCTRVLY 135.6
TELECYN 135.4
SOUTHBAY 68.52
SOUTHBY1 18.00
SOUTHBGT 12.10
SOUTHBY2 17.64
UPTOWN 134.2
MISSION 224.2
OLD TOWN 224.4
OLDTWNTP 224.4
SOUTHBAY 134.3
SILVERGT 223.9
SOUTHBY3 18.00
SOUTHBAY 231.9

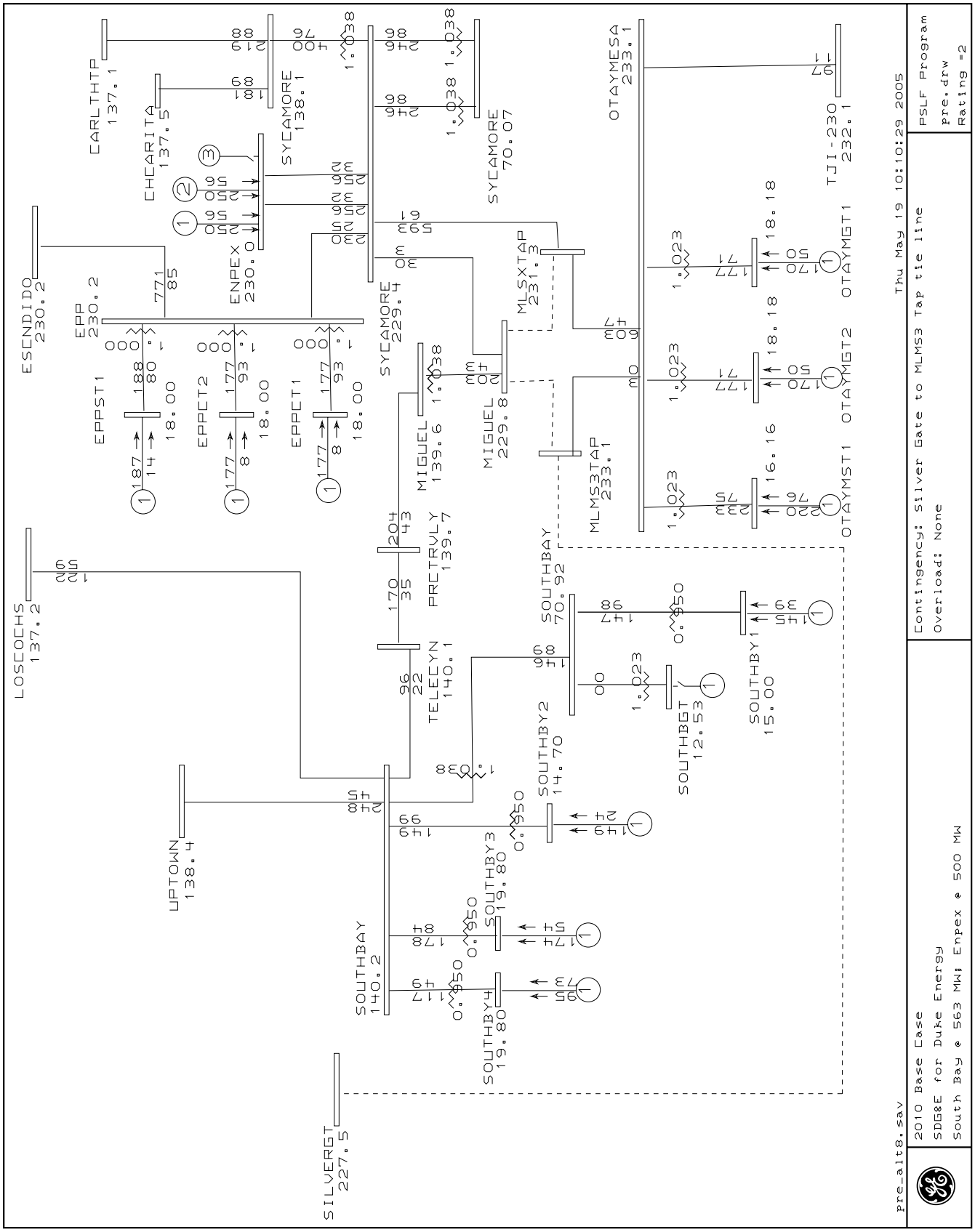
EARLTHTP
137.1
CHCARITA
137.5
SYCAMORE
138.1
SYCAMORE
70.07
OTAYMESA
233.1
TJI-230
232.1
ESCNDIDO
230.2
EPP
230.2
ENPEX
230.0
SYCAMORE
229.4
MLSXTAP
231.3
EPPST1
EPPCT2
EPPCT1
MIGUEL
139.6
MIGUEL
229.8
MLMS3TAP
233.1
OTAYMGT1
OTAYMGT2
OTAYMST1
LOSCOCHS
137.2
PRCTRVLY
139.7
TELECYN
140.1
SOUTHBAY
70.92
SOUTHBY1
SOUTHBGT
12.53
SOUTHBY2
14.70
SOUTHBY3
19.80
SOUTHBY4
19.80
SOUTHBAY
140.2
UPTOWN
138.4
SILVERGT
227.5
Thu May 19 10:10:29 2005
PSLF Program
pre.drw
Rating =2
Contingency: Silver Gate to MLMS3 Tap tie line
Overload: None
pre_alt8.sav
2010 Base Case
SDG&E for Duke Energy
South Bay @ 563 MW; Enpex @ 500 MW

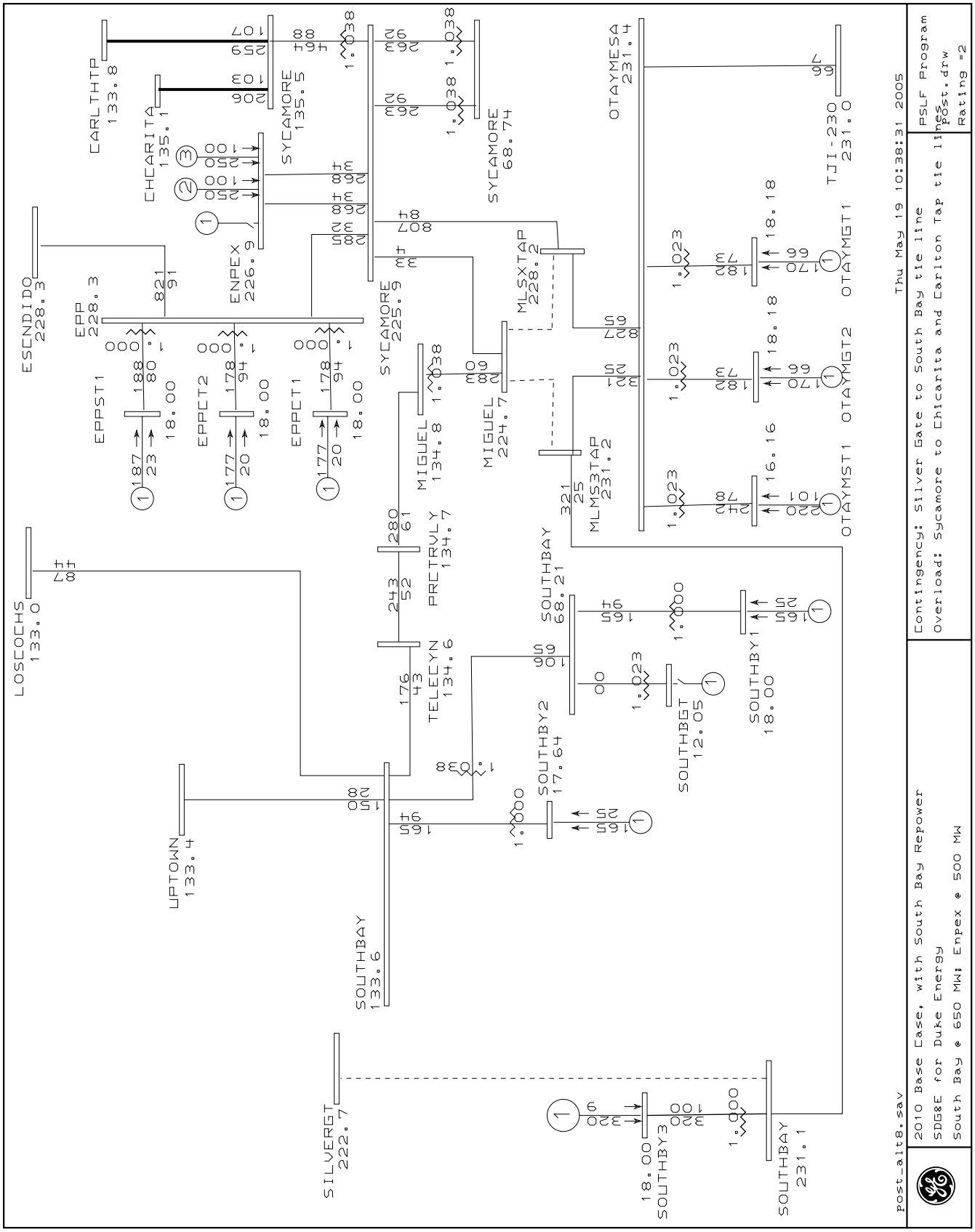
CARLTHTP
133.8
CHCARITA
135.1
SYCAMORE
135.5
SYCAMORE
68.74
OTAYMESA
231.4
TJI-230
231.0
ESCNDIDO
228.3
EPP
228.3
ENPEX
226.9
SYCAMORE
225.9
MLSXTAP
228.2
EPPST1
18.00
EPPCT2
18.00
EPPCT1
18.00
MIGUEL
134.8
MIGUEL
224.7
MLMS3TAP
231.2
OTAYMGT1
OTAYMGT2
OTAYMST1
LOSCOCHS
133.0
PRCTRVLY
134.7
TELECYN
134.6
SOUTHBAY
68.21
SOUTHBY1
18.00
SOUTHBGT
12.05
SOUTHBY2
17.64
UPTOWN
133.4
SOUTHBAY
133.6
SILVERGT
222.7
SOUTHBY3
18.00
SOUTHBAY
231.1
Thu May 19 10:38:31 2005
PSLF Program
post.drw
Rating =2
Contingency: Silver Gate to South Bay tie line
Overload: Sycamore to Chicarita and Carlton Tap tie lines
2010 Base Case, with South Bay Repower
SDG&E for Duke Energy
South Bay @ 650 MW; Enpex @ 500 MW
post_alt8.sav

Blank

Appendix D – Short Circuit

Substation Legend:
B=B Station
BE=Bernardo
CAN=Cannon
CR=Coronado
CS=Chollas
DI=Division
EA=Encina
EC=El Cajon
EL=Elliot
ES=Escondido
F=F Station
GD=General Dynamics
GE=Genesee
IB=Imperial Beach
KE=Kettner
KY=Kearny
LC=Los Coches
LI=Lilac
ME=Melrose
MG=Montgomery
MI=Main
MRGT=Miramar GT
MN=Monserate
MS=Mission
MY=Murray
NIM=North Island Metering
OT=Old Town
OY=Otay
PL=Point Loma
PQ=Penasquitos
RN=Rose Canyon
S=Sampson
SA=San Luis Rey
SF=Ranco Santa Fe
SM=San Marcos
SO=San Onofre
SX=Sycamore Canyon
SY=South Bay
TB=Trabuco
UCM=University of California Metering
WA=Wabash

Selected Fault Current Plots

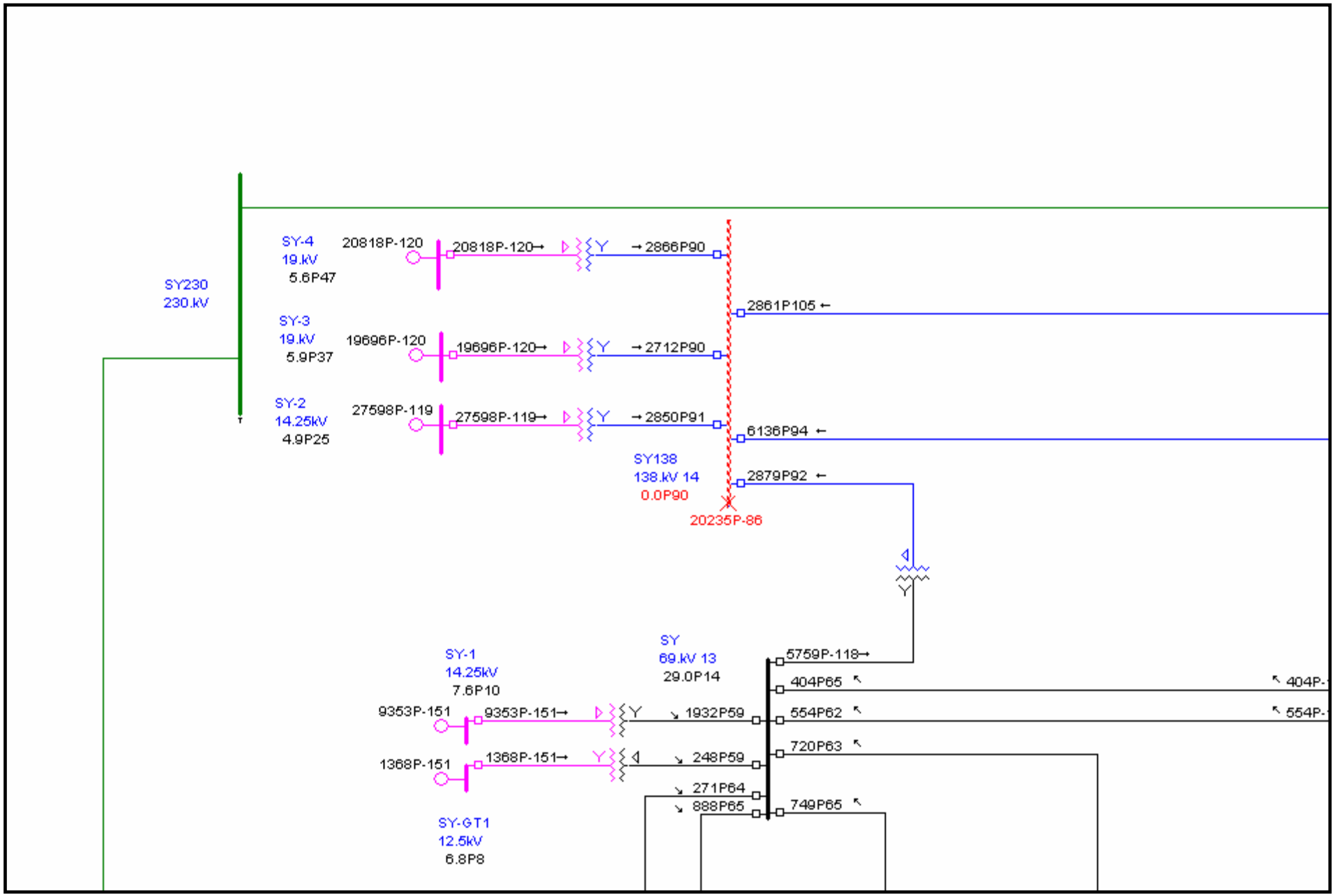

Pre-Project 3LG Fault (South Bay 138 kV

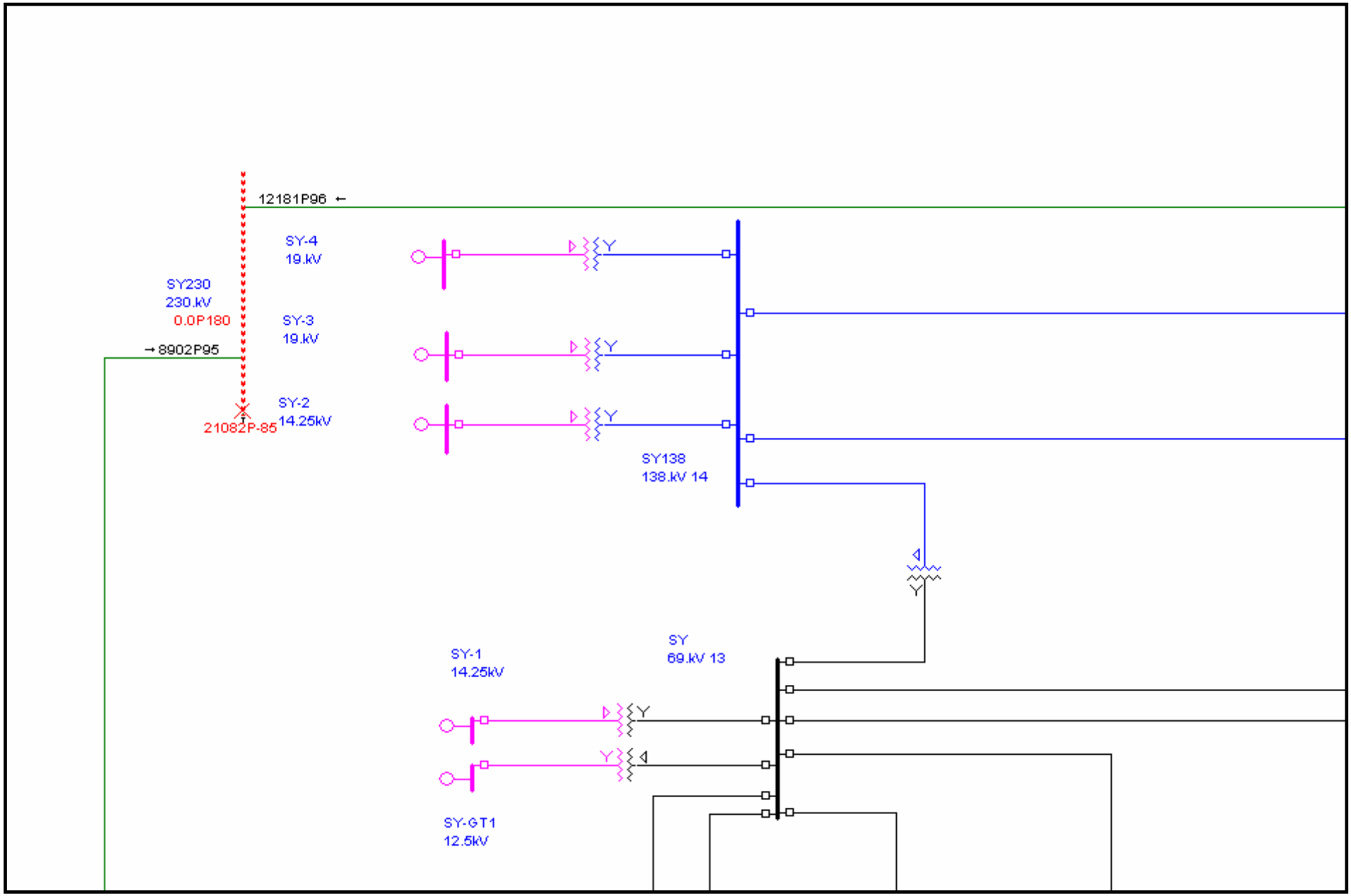

Pre-Project 3LG Fault (South Bay 230 kV

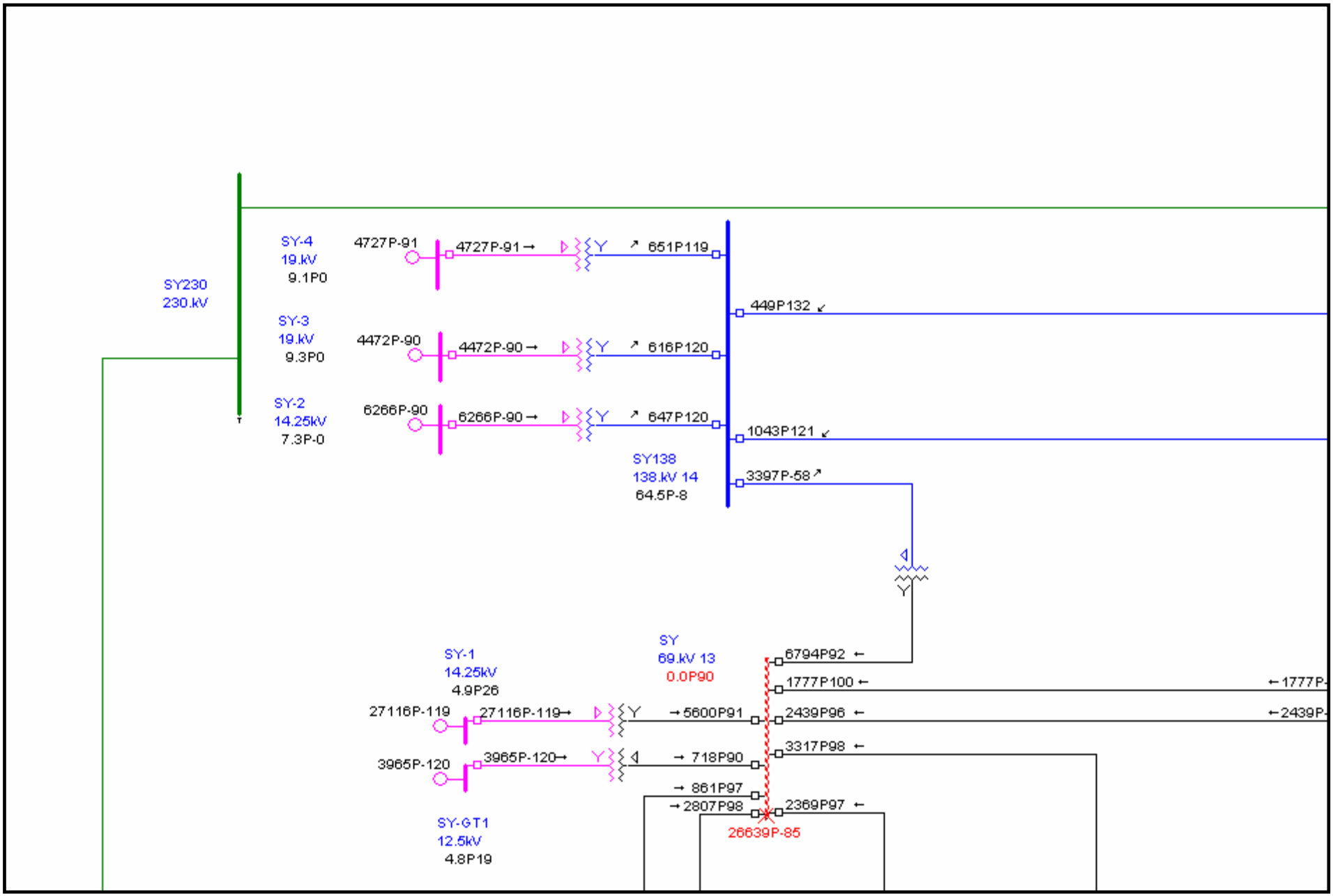

Pre-Project 3LG Fault (South Bay 69 kV

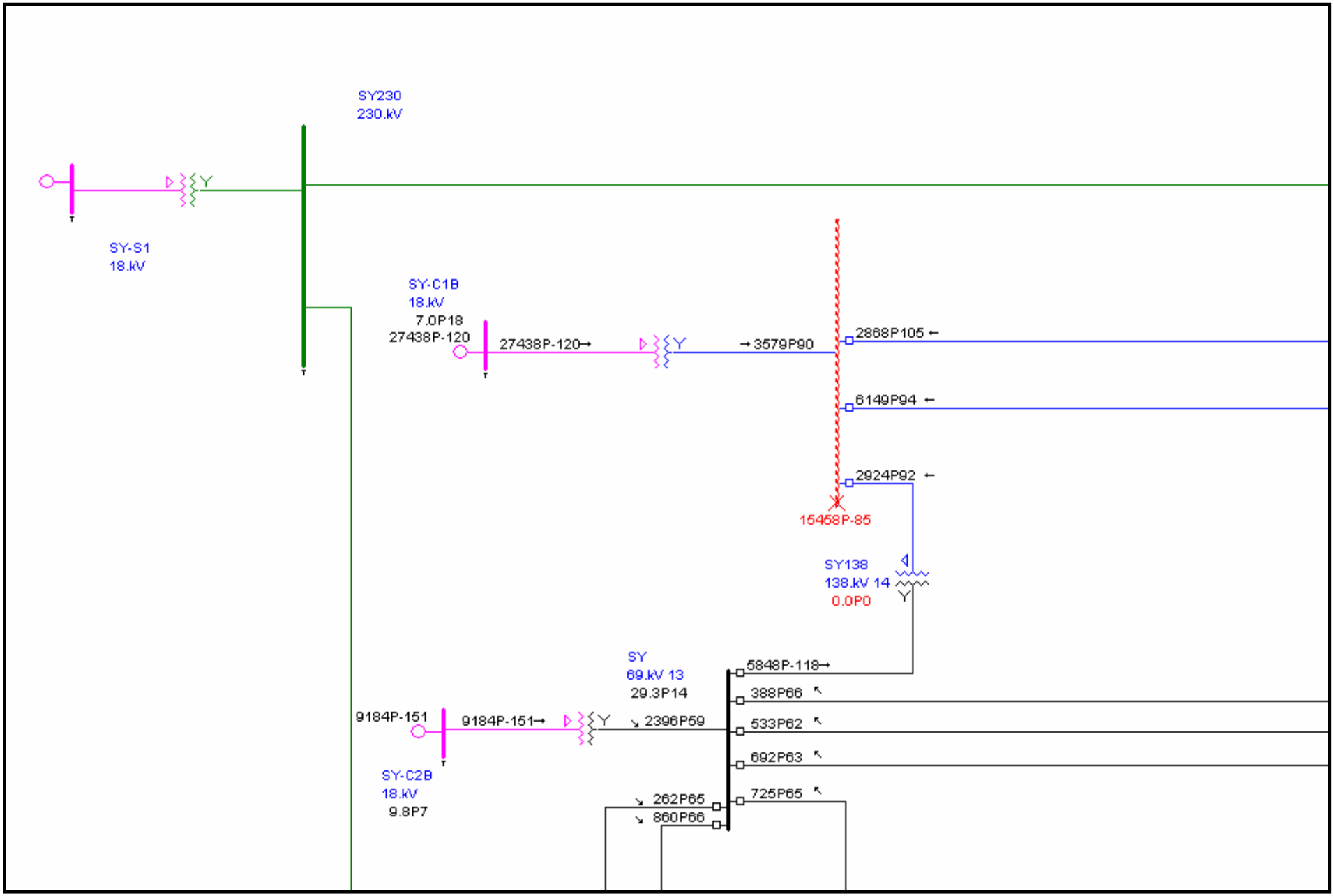

Post-Project 3LG Fault (South Bay 138 kV

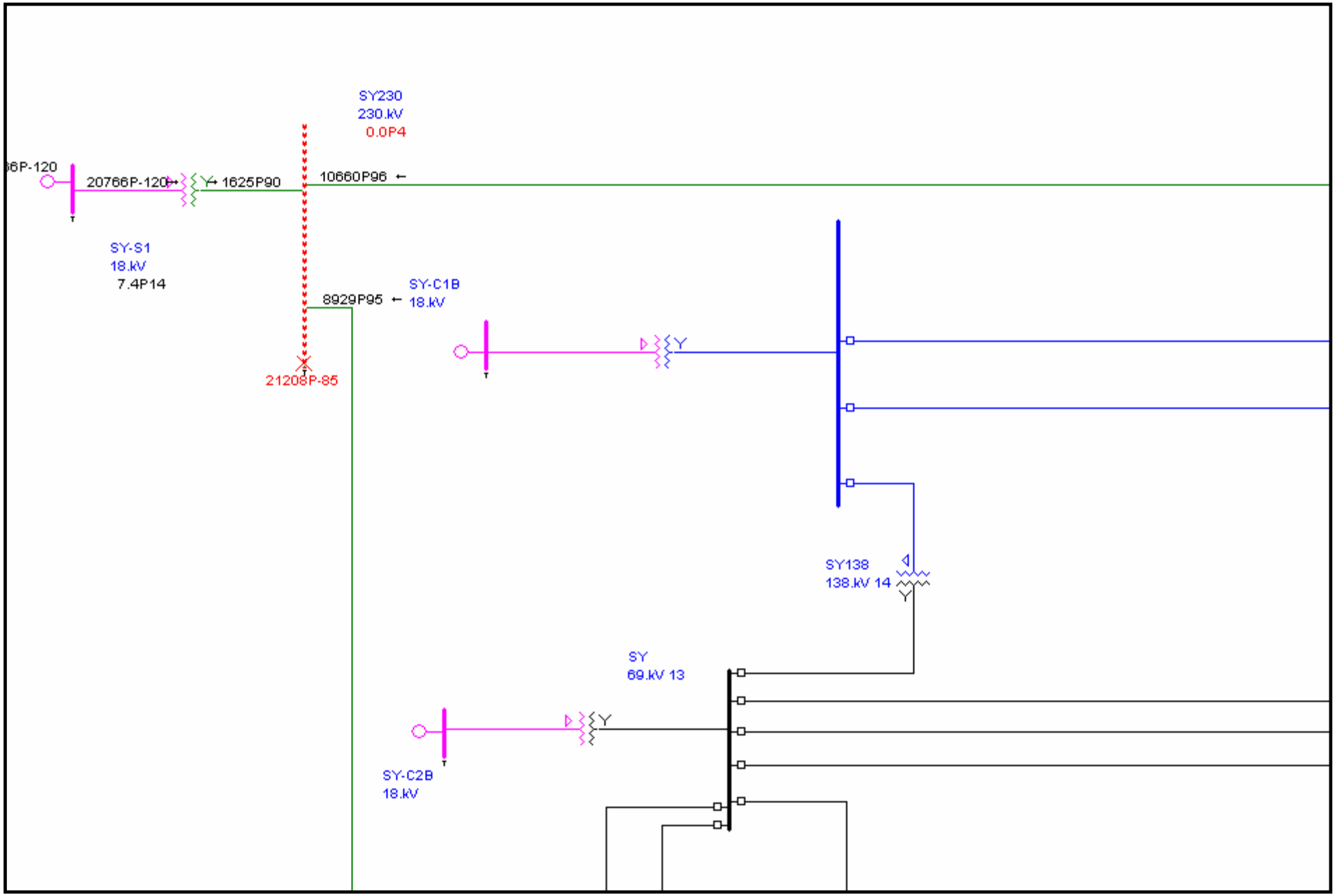

Post-Project 3LG Fault (South Bay 230 kV

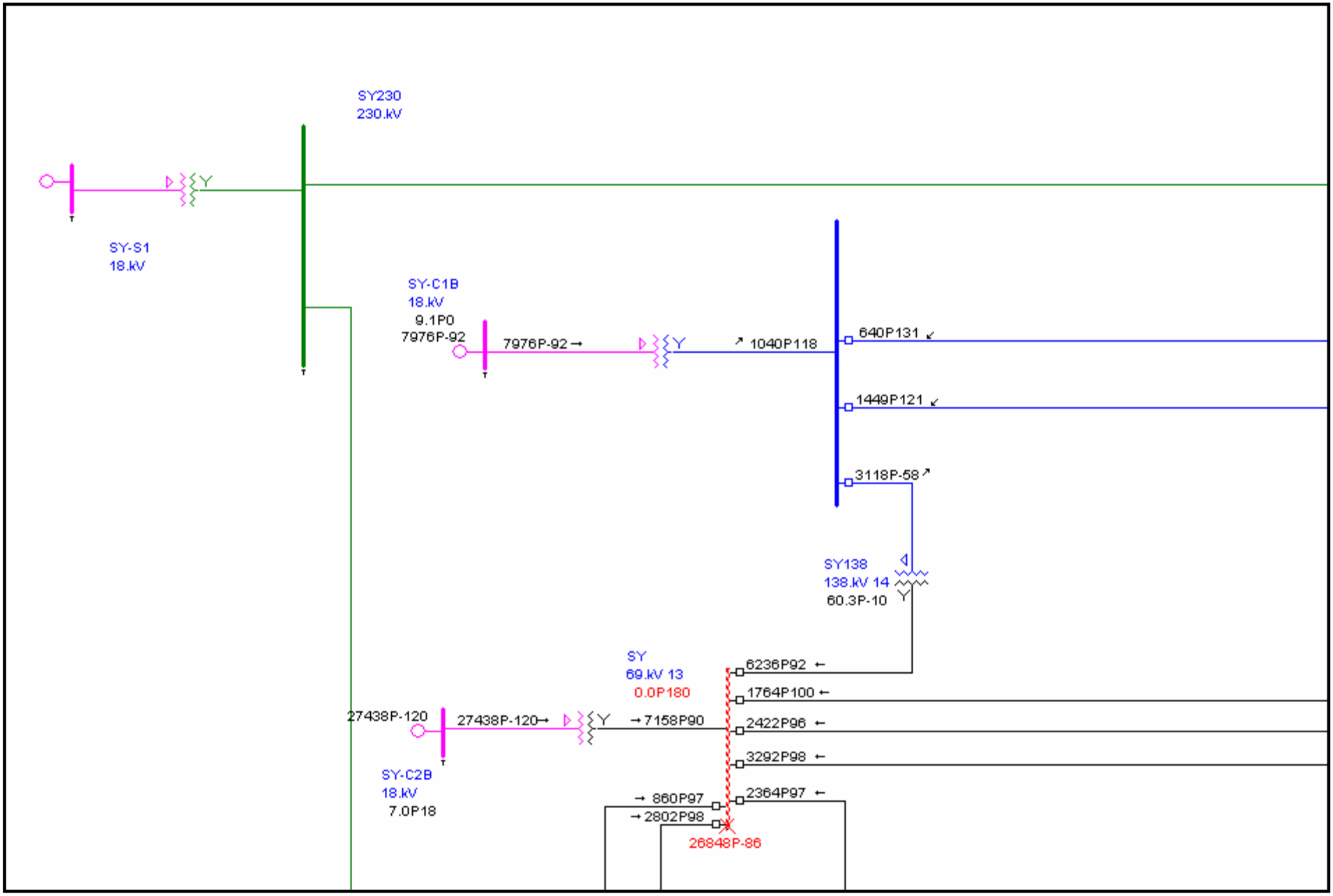

Post-Project 3LG Fault (South Bay 69 kV

Appendix E – Interconnection Application Queue

In June of 2002, FERC approved Amendment 39 to the CAISO tariff which transferred the responsibility for queuing new Generators Interconnection Applications from the Participating Transmission Owners to the California CAISO. The CAISO and SDG&E queues are provided here in Appendix E:

INTERCONNECTION APPLICATION QUEUE

CAISO

	Applicant Name	Project Name	Nearest Substation	Capacity (MW)	Yr. Ops. To Begin	Status
1	CONFIDENTIAL	CONFIDENTIAL	SCE Mountain Pass Substation	63	2004	Active
2	CONFIDENTIAL	CONFIDENTIAL	High Winds/Contra Costa PP	150	2005	Active
3	San Diego County Water Authority	Olivenhain-Hodges Pumped Storage	Escondido	40	2007	Active
4	Calpine	Otay Mesa	Miguel-Tijuana *615 -total capacity, 550 MW in SDGE queue	615	2004	Active
5	CONFIDENTIAL	CONFIDENTIAL	Mountain Pass	50	2004	Active
6	Gaviota Energy/Global Renewable	Lompoc Wind Power Project	Cabrillo	120	2006	Active
7	CONFIDENTIAL	CONFIDENTIAL	Devers	560	2006	Active
8	CONFIDENTIAL	CONFIDENTIAL	Antelope	200	2005	Active
9	Eurus Energy	Eurus Oasis Project	West Wind - Vincent	65	2004	Active
10	Kings River Conservation District	KRCD Peaking Project	Malaga	97	2004	Active
11	CONFIDENTIAL	CONFIDENTIAL	Crestwood	46	2005	Active
12	CONFIDENTIAL	CONFIDENTIAL	Antelope	300	2006	Active
13	FPL Energy, LLC	High Winds III	Birds Landing Switching Station	38	2005	Active
14	Mountainview Power Co. LLC	Mountainview Power Project	San Bernadino * 72 Additional MW	72	2004	Active
15	CONFIDENTIAL	CONFIDENTIAL	High Winds/Contra Costa PP	150	2006	Active

16	CONFIDENTIAL	CONFIDENTIAL	Crestwood	117	2005	Active
17	CONFIDENTIAL	CONFIDENTIAL	Warner	64.5	2006	Active
18	CONFIDENTIAL	CONFIDENTIAL	Crestwood	36	2006	Active
19	Duke Energy South Bay, LLC	South Bay Replacement - Option 1	138/69 kV South Bay (650 MW CC)	650	2010	Active
20	Duke Energy South Bay, LLC.	South Bay Replacement - Option 2	138/69 kV South Bay (640 MW CT-SC)	640	2010	Active
21	City and County of San Francisco	S. F. Electric Reliability Generating Plant	Potrero 115 kV Sub	145.1	2006	Active
22	CONFIDENTIAL	CONFIDENTIAL	Collector Substation at Geysers #17 & Fulton 230 kV line	201	2006	Active
23	City and County of San Francisco	San Francisco Airport Electric Reliability Plant	SF Airport Substation	48.7	2006	Active
24	CONFIDENTIAL	CONFIDENTIAL	Monolith Substation	201	2007	Active
25	CONFIDENTIAL	CONFIDENTIAL	Boulevard - Crestwood 69-kV transmission line	201	2008	Active
26	Caithness Dixie Valley, LLC	Caithness Dixie Valley, LLC	Bishop Control Sub	10	1988	Active
27	CONFIDENTIAL	CONFIDENTIAL	Monolith Substation	300	2007	Active
28	CONFIDENTIAL	CONFIDENTIAL	Miramar GT Substation	48.5	2005	Active
29	Duke	Duke	TL698 69 kV SDG&E Line	70	2006	Active
30	NRG Energy Center San Francisco LLC	San Francisco Cogeneration	Mission Sub @ 8th & Mission or Embarcadero Sub @ 1st & Flsm	13.76	2006	Active
31	CONFIDENTIAL	CONFIDENTIAL	PG&E 115 KV Panoche Sub	99.9	2006	Active

32	CONFIDENTIAL	CONFIDENTIAL	PG&E's 115 kV Tesla - Stockton Cogen Trans. Line.	99.9	2006	Active
33	D. Milne Associated, LLC	Ripon Generation	PG&E Tesla Substation	96.9	2007	Active
34	Duke Energy North America, LLC	Duke Energy Oakland, LLC Option 1	Oakland "C" 115 kV Substation	320	2009	Active
35	Duke Energy North America, LLC	Duke Energy Oakland, LLC Option 2	Oakland "C: 115kV Substation	315	2009	Active
36	CONFIDENTIAL	CONFIDENTIAL	Humboldt Power Plant Substation	146.4	2008	Active
37	CONFIDENTIAL	CONFIDENTIAL	Proposed Birds Landing Switching Station	200	2008	Active
38	CONFIDENTIAL	CONFIDENTIAL	Eastshore Substation	118	2007	Active
39	CONFIDENTIAL	CONFIDENTIAL	Pease Sub Station	99.9	2007	Active
40	Pastoria Energy Center LLC	Pastoria Expansion	Pastoria	158.8	2006	Active
41	CONFIDENTIAL	CONFIDENTIAL	PG&E's McCall Substation	300	2007	Active
42	CONFIDENTIAL	CONFIDENTIAL	PG&E Borden Substation 230 kV Bus	126.5	2008	Active
43	CONFIDENTIAL	CONFIDENTIAL	PG&E Tesla-Bellota 230 kV line	168.7	2008	Active
44	Three Mountain Power, LLC	Three Mountain Power Project	PG&E Pit1-Pit 3 & Pit 1-Cottonwood 230kV	295	2007	Active
45	CONFIDENTIAL	CONFIDENTIAL	FMC Sub Station	300	2007	Active
46	Calpine	Russell City Energy Center	Eastshore substation	361	2006	Active
47	Calpine	Wolfskill II	Vaca-Dixon - Suisun 115 kV	50	2007	Active

			line			
48	Calpine	East Altamont Energy Center - Option 1	Tracy (WAPA)	806	2008	Active
49	Calpine	East Altamont Energy Center - Option 2	Tesla-Tracy #1 230 kV Line - Tracy Sub	541	2006	Active
50	CONFIDENTIAL	CONFIDENTIAL	Evergreen-San Jose "B" 115 kV line	94.5	2008	Active
51	CONFIDENTIAL	CONFIDENTIAL	Herndon - Kearney 230 kV line	200.6	2008	Active
52	CONFIDENTIAL	CONFIDENTIAL	Contra Costa Power Plant 230 kV Substation	590	2009	Active
53	Cal Peak Power, LLC	Vaca-Dixon	Vaca-Dixon Sub	52	2008	Active
54	CONFIDENTIAL	CONFIDENTIAL	Devers Substation	100.5	2006	Active
55	Fresno Cogeneration Partners, LP	Fresno Cogen ICE Unit	70 kV Kerman-Helm transmission line	.55	2005	Active
56	Calpine Corporation	Inland Empire Energy Center	SCE Valley Substation	810	2008	Active
57	Cummins West, Inc.	Willits Power Plant	Adjacent to Mendocino-Ft. Bragg-Willits 60kV lines	32	2007	Active
58	Cummins West, Inc.	West Sacramento Peaker	115kV Rio Oso-West Sac	49	2007	Active
59	CONFIDENTIAL	CONFIDENTIAL	Panoche Sub Station	428	2008	Active
60	CONFIDENTIAL	CONFIDENTIAL	Pleasant Grove Sub Station	116.8	2008	Active
61	Cal Peak Power, LLC.	Lodi	City of Lodi Sub	104	2008	Active
62	Northwest Energy Systems Co.	Oroville Energy II, LLC	Palermo-Oroville #2 60 kV	65	2008	Active
63	CONFIDENTIAL	CONFIDENTIAL	Round Mountain-	99.4	2008	Active

			Cottonwood 230kV transmission line			
64	CONFIDENTIAL	CONFIDENTIAL	Glenn-Vaca-Dixon 230 kV transmission line	99.4	2008	Active
65	CONFIDENTIAL	CONFIDENTIAL	Logan Creek - Vaca-Dixon 230 kV transmission line	99.4	2008	Active
66	Ramco Generating Two	West Fresno Energy Facility	PG&E West Fresno Substation	118	2007	Active
67	CONFIDENTIAL	CONFIDENTIAL	Malaga-McCall 115 kV	116	2008	Active
68	CONFIDENTIAL	CONFIDENTIAL	Los Banos Substation	165	2008	Active
69	CalPeak Power, LLC	Panoche	PG&E Panoche Sub	104	2008	Active
70	CONFIDENTIAL	CONFIDENTIAL	PG&E California Ave tap into West Fresno-McCall 115 kV t lin	99.9	2006	Active
71	Calpine	San Joaquin Valley Energy Center - Option 1	PG&E Helm substation	791	2008	Active
72	Calpine	Calpine Pittsburg Power Plant - Unit 1	Pittsburg Swichyard	83.7	2007	Active
73	Sempra Energy Resources	Copper Mountain Project	SEC El Dorado Switchyard (230 kV)	581	2007	Active
74	E & L Westcoast, LLC	CPV Colusa	Between Cottonwood and Vaca-Dixon	715	2010	Active
75	CONFIDENTIAL	CONFIDENTIAL	Bishop-Control Substation	62	2007	Active
76	Wellhead Power Panoche, LLC	Wellhead Power Panoche ICE	Panoche Sub	.35	2005	Active
77	Wellhead Power	Wellhead Power	Gates Sub	.35	2005	Active

	GAtes, LLC	Gates ICE				

List current as of: March 14, 2005

The CAISO queue can be found:
http://www2.caiso.com/thegrid/planning/geninterconnect/isointconqueue.html

Queue Summary for Electric Interconnections and System Upgrades Electric Interconnection Queue Summary

SDG&E

Applicant Name	*Project Description*	*Project Interconnection Points*	*(MW)*	*Original Proposed Interconnection Facility In-Service Date*	*Modified Interconnection Facility In-Service Date*	*Completed Application Acceptance Date*	*Queue Position*	*STUDY STATUS*
Sempra Energy Resources(TDM)	**Imperial Valley Generation Project I**	**Imperial Valley 230kV Bus**	**600**	**06/30/2002**	**02/04/2003**	01/13/1999	1	**Complete**
Otay Mesa Generating Company, LLC	**Otay Mesa Generating Project**	**Miguel Substation**	**550**	**03/01/2002**	**06/01/2004**	11/01/1999	2	**Active**
RAMCO, Inc.	**Chula Vista Generating Plant**	**Otay Substation**	**42/49.5**	**06/01/2001**	**05/04/2001**	02/18/2000	3	**Complete**
RAMCO, Inc.	**Escondido Generating Plant**	**Escondido Substation**	**42/49.5**	**06/01/2001**	**08/17/2001**	02/18/2000	4	**Complete**
Sempra Energy Resources	**Escondido 500MW Power Project**	**Escondido Substation (521MW Summer/545 Winter)**	**545**	**06/01/2001**	**05/31/2004**	08/08/2000	5	**Active**
Cabrillo Power I, LLC	**Encina Generation Project**	**Encina Power Plant Phase I Encina Power Plant Phase II**	**600 300**	**06/30/2003 06/30/2003**	**12/01/2005 06/01/2008**	08/09/2000	6	**Active**
Coral Power, LLC	**La Rosita Power Project**	**U.S. - Mexico Border**	**250**	**02/01/2003**	**03/01/2003**	09/13/2000	7	**Complete**
Wildflower Energy LP	**LARKSPUR ENERGY FACILITY (Formerly Border No. 1)**	**SDGE Border Substation**	**49.9**	**06/01/2001**	**06/26/2001**	10/10/2000	8	**Complete**
CalPeak (DG	**BORDER**	**SDGE Border**						

Power, Inc.)	**Generating Project**	**Substation**	**49**	**05/01/2001**	**10/12/2001**	10/17/2000	9	**Complete**
CalPeak (DG Power,Inc.)	**ESCONDIDO Generating Project**	**SDGE Escondido Substation**	**49**	**05/01/2001**	**09/26/2001**	10/17/2000	10	**Complete**
CalPeak (DG Power, Inc.)	**EL CAJON Generating Project**	**SDGE El Cajon Substation**	**49**	**05/01/2001**	**01/15/2002**	10/17/2000	11	**Complete**
ENPEX	**San Diego Community Generating Station I**	**Sycamore Canyon Substation**	**500/750**	**06/01/2004**	**06/01/2004**	11/28/2000	12	**Active**
Baja California Power, Inc. (BCP) InterGen B - Phase I	**160MW Generating Facility Project (Mexicali, Baja California, Mexico)**	**Imperial Valley Substation**	**160**	**04/01/2003**	**07/01/2002**	01/26/2001	13	**Complete**
Baja California Power, Inc. (BCP) InterGen B - Phase II	**440MW Generating Facility Project (Mexicali, Baja California, Mexico)**	**Imperial Valley Substation**	**440**	**04/01/2003**	**11/01/2002**	01/26/2001	13	**Complete**
Wildflower Energy LP	**LARKSPUR ENERGY FACILITY (Formerly Border No. 2)**	**SDGE Border Substation**	**49**	**06/01/2001**	**06/26/2001**	02/08/2001	15	**Complete**

System Upgrade Queue Summary

Applicant Name	***Project Upgrade Segment***	***Project Description***	***Nominal Capacity (MW)***	***Original Proposed In-Service Date***	***Modified In-Service Date***	***Completed Application Acceptance Date***	***Queue Position***	***STATUS***
Sempra Energy Resources	**Palo Verde-North Gila-Imperial Valley 500kV Line Upgrade I**	**Upgrade Series Capacitors from Palo Verde to Imperial Valley on 500kV Line**	**To Be Determined**	**To Be Determined**	**n/a**	01/09/2001	1	**Complete**

Completed Construction Projects

Applicant Name	*Project Description*	*Project Interconnection Points*	*(MW)*	*Original Proposed Interconnection Facility In-Service Date*	*Modified Interconnection Facility In-Service Date*	*Completed Application Acceptance Date*	*Queue Position*	*STATUS*
RAMCO, Inc.	**Chula Vista Generating Plant**	**Otay Substation**	**42/49.5**	**06/01/2001**	**05/04/2001**	02/18/2000	3	**Complete**
Wildflower Energy LP	**LARKSPUR ENERGY FACILITY (Formerly Border No. 1)**	**SDGE Border Substation**	**49.9**	**06/01/2001**	**06/26/2001**	10/10/2000	8	**Complete**
Wildflower Energy LP	**LARKSPUR ENERGY FACILITY (Formerly Border No. 2)**	**SDGE Border Substation**	**49**	**06/01/2001**	**06/26/2001**	02/08/2001	17	**Complete**
RAMCO, Inc.	**Escondido Generating Plant**	**Escondido Substation**	**42/49.5**	**06/01/2001**	**08/17/2001**	02/18/2000	4	**Complete**
CalPeak (DG Power, Inc.)	**ESCONDIDO Generating Project**	**SDGE Escondido Substation**	**49**	**05/01/2001**	**09/26/2001**	10/17/2000	10	**Complete**
CalPeak (DG Power, Inc.)	**BORDER Generating Project**	**SDGE Border Substation**	**49**	**05/01/2001**	**10/12/2001**	10/17/2000	9	**Complete**
CalPeak (DG Power, Inc.)	**EL CAJON Generating Project**	**SDGE El Cajon Substation**	**49**	**05/01/2001**	**01/15/2002**	10/17/2000	11	**Complete**
Coral Power, LLC	**La Rosita Power Project**	**CFE/U.S. - Mexico Border**	**250**	**02/01/2003**	**03/01/2003**	09/13/2000	7	**Complete**
Baja California Power, Inc. (BCP) InterGen B -Phase I	**160MW Generating Facility Project (Mexicali, Baja California, Mexico)**	**Imperial Valley Substation**	**160**	**04/01/2003**	**07/01/2002**	01/26/2001	13	**Complete**

Baja California Power, Inc. (BCP) InterGen B -Phase II	**440MW Generating Facility Project (Mexicali, Baja California, Mexico)**	**Imperial Valley Substation**	**440**	**04/01/2003**	**11/01/2002**	01/26/2001	13	**Complete**
Sempra Energy Resources (TDM)	**Imperial Valley Generation Project I**	**Imperial Valley 230kV Bus**	**600**	**06/30/2002**	**02/04/2003**	01/13/1999	1	**Complete**

Blank

Appendix F – Load and Resource Table

	4069	2226	2225	2235	2722	2722	2716	2721	2720	2723	2238	2234	2234	2225	2234	2724	2718	2724	2725	2728	2240	2235		
	Every thing	Pre Alt1	Pre Alt1 Sen1	Pre Alt2	Pre Alt_3	Pre Alt_4	Pre Alt_5	Pre Alt_6	Pre Alt_7	Pre Alt_8	Pre Case	Pre Case sen1	Pre Case_Sen2	Post Alt1	Post Alt 2	Post Alt_3	Post Alt_4	Pre Alt_6	Post Alt_7	Post Alt_8	Post Case	Post Case Sen2		
BOULEVRD	0.5	0.5	0.5	0.5	0.5	0.5	0.5	0.5	0.5	0.5	0.5	0.5	0.5	0.5	0.5	0.5	0.5	0.5	0.5	0.5	0.5	0.5		
CABRILLO	1	1	1	1	1	1	1	1	1	1	1	1	1	1	1	1	1	1	1	1	1	1		
DIVISION	47	47	47	47	47	47	47	47	47	47	47	47	47	47	47	47	47	47	47	47	47	47		
GOALLINE	49.8	49.8	49.8	49.8	49.8	49.8	49.8	49.8	49.8	49.8	49.8	49.8	49.8	49.8	49.8	49.8	49.8	49.8	49.8	49.8	49.8	49.8		
KYOCERA	0.5	0.5	0.5	0.5	0.5	0.5	0.5	0.5	0.5	0.5	0.5	0.5	0.5	0.5	0.5	0.5	0.5	0.5	0.5	0.5	0.5	0.5		
MIRAMAR	0.5	0.5	0.5	0.5	0.5	0.5	0.5	0.5	0.5	0.5	0.5	0.5	0.5	0.5	0.5	0.5	0.5	0.5	0.5	0.5	0.5	0.5		
MURRAY	0.5	0.5	0.5	0.5	0.5	0.5	0.5	0.5	0.5	0.5	0.5	0.5	0.5	0.5	0.5	0.5	0.5	0.5	0.5	0.5	0.5	0.5		
NOISLMTR	33	33	33	33	33	33	33	33	33	33	33	33	33	33	33	33	33	33	33	33	33	33		
OTAY	3.5	3.5	3.5	3.5	3.5	3.5	3.5	3.5	3.5	3.5	3.5	3.5	3.5	3.5	3.5	3.5	3.5	3.5	3.5	3.5	3.5	3.5		
POINTLMA	22	22	22	22	22	22	22	22	22	22	22	22	22	22	22	22	22	22	22	22	22	22		
R.SNTAFE	0.5	0.5	0.5	0.5	0.5	0.5	0.5	0.5	0.5	0.5	0.5	0.5	0.5	0.5	0.5	0.5	0.5	0.5	0.5	0.5	0.5	0.5		
RINCON	0.5	0.5	0.5	0.5	0.5	0.5	0.5	0.5	0.5	0.5	0.5	0.5	0.5	0.5	0.5	0.5	0.5	0.5	0.5	0.5	0.5	0.5		
SAMPSON	11	11	11	11	11	11	11	11	11	11	11	11	11	11	11	11	11	11	11	11	11	11		
SANMRCOS	1.5	1.5	1.5	1.5	1.5	1.5	1.5	1.5	1.5	1.5	1.5	1.5	1.5	1.5	1.5	1.5	1.5	1.5	1.5	1.5	1.5	1.5		
SWEETWTR	0.5	0.5	0.5	0.5	0.5	0.5	0.5	0.5	0.5	0.5	0.5	0.5	0.5	0.5	0.5	0.5	0.5	0.5	0.5	0.5	0.5	0.5		
CARLTNHS	1.5	1.5	1.5	1.5	1.5	1.5	1.5	1.5	1.5	1.5	1.5	1.5	1.5	1.5	1.5	1.5	1.5	1.5	1.5	1.5	1.5	1.5		
	173.8	173.8	173.8	173.8	173.8	173.8	173.8	173.8	173.8	173.8	173.8	173.8	173.8	173.8	173.8	173.8	173.8	173.8	173.8	173.8	173.8	173.8		
LkHodG1	20	20	20	20	0	0	0	0	0	0	20	20	20	20	20	0	0	0	0	0	20	20		
LkHodG2	20	20	20	20	0	0	0	0	0	0	20	20	20	20	20	0	0	0	0	0	20	20		
OTAYMGT1	170	0	0	170	170	100	100	100	150	170	169	169	169	0	170	170	100	100	150	170	169	169		
OTAYMGT2	170	0	0	170	170	100	100	100	150	170	169	169	169	0	170	170	100	100	150	170	169	169		
OTAYMST1	221	0	0	221	221	108	108	108	200	220	220	220	220	0	221	221	108	108	200	220	220	220		
EPPCT1	177	176	176	0	177	177	177	177	177	177	176	176	176	176	0	177	177	177	177	177	176	176		
EPPCT2	177	176	176	0	177	177	177	177	177	177	176	176	176	176	0	177	177	177	177	177	176	176		
EPPST1	187	186	186	0	187	187	187	187	187	187	186	186	186	186	0	187	187	187	187	187	186	186		
	1142	578	578	601	1102	849	849	849	1041	1101	1136	1136	1136	578	601	1102	849	849	1041	1101	1136	1136		
SOUTHBY2	149	149	135	149	149	149	149	149	149	149	149	149	149	165	165	165	165	165	165	165	165	165	SY GT1	165
SOUTHBY1	145	145	145	145	145	145	145	145	145	145	145	145	145	165	165	165	165	165	165	165	165	165	SY GT2	165
SOUTHBY3	174	174	155	174	174	174	174	174	174	174	174	174	174	320	320	320	320	320	320	320	320	320	SY ST	320
ENCINA5	329	239	320	311	300	200	225	225	200	200	239	239	0	280	308	300	200	200	200	200	280	0		650
ENCINA4	299	228	300	255	244	200	296	51	142	85	0	96.8	235	224.8	297.4	286	236	51	110	53	0	275		
ENCINA3	109	109	109	109	109	109	109	109	100	100				109	109	109	109	50	50	50				
ENCINA2	103	103	103	0	103	0	0							103	0	103	0							
ENCINA1	106	106	106	0	0	0	0							106	0	0	0							
ENVIREPL	40			0	0	0	0								0	0	0							
RAMCO_MR	45			0	0	0	0								0	0	0							
SOUTHBY4	222	221	100	222	222	222	95	95	95	95	221	120	221	0	0	0	0				0			
CALPK_BD *	49			49											49									
CALPK_ES *	49																							
CALPK_EC *	42																							
LRKSPBD1 *	46			46											46									
LRKSPBD2 *	46																							
MIRAMRGT	17																							
MIRAMRGT	16																							
KEARN3AB	15																							
KEARN3AB	14																							
KEARN3CD	14																							
KEARN3CD	14																							
ELCAJNGT	13																							
ENCINAGT	14																							
KEARNGT1	15																							
KEARN2AB	14																							
KEARN2AB	14																							
KEARN2CD	14																							
KEARN2CD	13																							
SOUTHBGT	13																							
SUPERIOR	50																							
	50																							
ENPEX	500	0	0	0	0	500	500	750	500	500	0	0		0	0		500	750	500	500	0			
	2753	1474	1473	1460	1446	1699	1693	1698	1505	1448	928	923.8	924	1472.8	1459.4	1448	1695	1701	1510	1453	930	925		
	4069	2226	2225	2235	2722	2722	2716	2721	2720	2723	2238	2234	2234	2225	2234	2724	2718	2724	2725	2728	2240	2235		
Import	2850	2800	2800	2800	2300	2300	2300	2300	2300	2300	2800	2800	2800	2800	2800	2300	2300	2300	2300	2300	2800	2300		
Load	5038	5026	5026	5028	5028	5028	5028	5028	5028	5028	5038	5038	5038	5025	5028	5028	5028	5028	5028	5028	5038	5028		
Gen	2188	2226	2226	2228	2728	2728	2728	2728	2728	2728	2238	2238	2238	2225	2228	2728	2728	2728	2728	2728	2238	2728		
~Losses		108	108	110	110	110	110	110	110	110	120	120	120	107	110	110	110	110	110	110	122.6	110		
PIOAD		4918	4918	4918	4918	4918	4918	4918	4918	4918	4917.8	4918	4918	4918	4918	4918	4918	4918	4918	4918	4917.8	4918		
		5026	5026	5028	5028	5028	5028	5028	5028	5028	5038	5038	5038	5025	5028	5028	5028	5028	5028	5028	5040	5028		
	Every thing	Pre Alt1	Pre Alt1 Sen1	Pre Alt 2	Alt 3	Alt 4	Pre Alt_5	Pre Alt_6	Pre Alt_7	Pre Alt_8	Pre Case	Pre Case sen1	Pre Case Sen2	Post Alt1	Post Alt 2	Alt 3	Post Alt_4	Post Alt_6	Post Alt_7	Post Alt_8	Post Case	Post Case Sen2		

Dispatch Stack

(August 3, 2004) SUMMER

in	-Bus-	-Name-	-PMAX- (MW)	-PMIN- (MW)	(MW)	
QF Generation (Always On)						
	22088	BOULEVRD	0.5	0.5		
	22092	CABRILLO	1.0	1		
	22172	DIVISION	47.0	47		
	22332	GOALLINE	49.8	49.8		
	22384	KYOCERA	0.5	0.5		
	22480	MIRAMAR	0.5	0.5		
	22532	MURRAY	0.5	0.5		
	22576	NOISLMTR	33.0	33		
	22604	OTAY	3.5	3.5		
	22660	POINTLMA	22.0	22		
	22680	R.SNTAFE	0.5	0.5		
	22688	RINCON	0.5	0.5		
	22704	SAMPSON	11.0	11		
	22724	SANMRCOS	1.5	1.5		
	22820	SWEETWTR	0.5	0.5		
	22120	CARLTNHS	1.5	1.5		
		Sub Total	173.8			
Priority One (Order Top to Bottom)						
2008	22625	LkHodG1	20			
2008	22626	LkHodG2	20			
2008	22605	OTAYMGT1	170	? (30)		
2008	22606	OTAYMGT2	170	? (30)	561	
2008	22607	OTAYMST1	221	? (30)		
2006	22262	EPPCT1	177	? (30)		
2006	22263	EPPCT2	177	? (30)	541	
2006	22265	EPPST1	187	? (30)		
		Sub Total	1142			
Priority Two (Order Top to Bottom)						
	22784	SOUTHBY2	149	30		149
	22780	SOUTHBY1	145	30	690	145
	22788	SOUTHBY3	174	30		174
	22233	ENCINA5	329	20		468
	22234	ENCINA4	299	20		
	22236	ENCINA3	109	20	946	
	22240	ENCINA2	103	20		
	22244	ENCINA1	106	20		
2006	22254	ENVIREPL	40	? (40)		
2005	22617	RAMCO_MR	45	? (45)		
	22792	SOUTHBY4	222	? (30)		690
	22149	CALPK_BD *	49	49		
	22153	CALPK_ES *	49	49		
	22150	CALPK_EC *	42	42	232	
	22074	LRKSPBD1 *	46	46		
	22075	LRKSPBD2 *	46	46		
	22488	MIRAMRGT	17	17		
	22488	MIRAMRGT	16	16		
	22375	KEARN3AB	15	15		
	22375	KEARN3AB	14	14		
	22376	KEARN3CD	14	14		
	22376	KEARN3CD	14	14		
	22212	ELCAJNGT	13	13	250	
	22248	ENCINAGT	14	14		
	22377	KEARNGT1	15	15		
	22373	KEARN2AB	14	14		
	22373	KEARN2AB	14	14		
	22374	KEARN2CD	14	14		
	22374	KEARN2CD	13	13		
	22776	SOUTHBGT	13	13		
		SUPERIOR	50	50		
			0	35		
	22255	ENPEX	750			
		Sub Total	2953			
Total of all Generation					4268.8	