APPENDIX 5C

Draft Facility Study

Rodney D. Winter
Senior Energy Administrator
San Diego Gas & Electric Company
8316 Century Park Court, CP52A
San Diego, CA 92123
Tel: 858-654-1799
Fax: 858-654-1692
RWinter@SempraUtilities.com

A Sempra Energy® utility

May 9, 2006

Mr. Andrew Trump
Duke Energy South Bay, LLC
5400 Westheimer Court
Houston, TX 77056-5310

Re: DESB Interconnection Facilities Study Final Draft

Dear Mr. Trump:

Pursuant to the Interconnection Facilities Study Agreement dated December 13, 2005 between Duke Energy South Bay, LLC ("DESB") and San Diego Gas & Electric Company ("SDG&E"), SDG&E provides the attached Interconnection Facilities Study Final Draft dated May 9, 2006.

This Final Draft is being presented to Duke Energy and the CAISO for review and comment. It is also being circulated internally for SDG&E review. Please provide comments by May 16, 2006.

If you have any questions or comments, please contact me at 858-654-1799.

Sincerely,

Rodney D. Winter

Rodney D. Winter
Senior Energy Administrator

Attachment: Interconnection Facilities Study Final Draft dated May 9, 2006

cc: T. Allen
L. P. Brown
J. Walsh
M. Mishler
G. Brown (CAISO)
J. Nickel (CAISO)

A Sempra Energy company

CONFIDENTIAL

"In accordance with the "Non-Disclosure and Use of Information Agreement" (the "Agreement") between SDG&E and the CAISO, the CAISO must cause each of its employees who will have access to this confidential information to acknowledge that they have read the Agreement and agree to abide by all of its terms regarding use and disclosure of this confidential information, and must cause such persons to execute Individual Agreements in the form attached as Attachment A to the "Agreement."

Project Developer

Duke Energy South Bay, LLC

Project Name

Duke Energy South Bay, LLC

INTERCONNECTION FACILITIES STUDY

Final Draft

May 9, 2006

Study Performed for Duke Energy South Bay, LLC
By San Diego Gas & Electric Company

TABLE OF CONTENTS

EXECUTIVE SUMMARY 3
INTRODUCTION AND OBJECTIVES 7
STUDY RESULTS AND PLAN OF SERVICE DEVELOPMENT 13
- Power Flow Results 13
- Transient Stability Results 14
- Post-Transient Voltage Stability Results 14
- Short Circuit Results 15
- Local Furnishing Bonds 16
- Cost Estimates 17

STUDY ASSUMPTIONS 25
TECHNICAL REQUIREMENTS/SPECIFICATIONS 26

EXECUTIVE SUMMARY

PROJECT DESCRIPTION
Duke Energy South Bay, LLC. ("Duke") requested San Diego Gas & Electric Company ("SDG&E") perform an Interconnection Facilities Study (the "Study") to interconnect its new facility ("Project") located at 990 Bay Blvd, Chula Vista, California. The proposed project is a 650 MW repower project that will replace the existing South Bay generation facilities. The proposed Project would be located west of Interstate 5 and south of the existing South Bay Power Plant (see Figure 1). The property is referred to as the former "LNG" property. Duke's original application was received by the California Independent System Operator ("CAISO") and was accepted by SDG&E and CAISO with an effective date of February 29, 2004.

PROJECT IN-SERVICE DATE
Duke's application stated a proposed commercial operation date of January 2010. The anticipated testing date is August 2009 (see Permitting and Scheduling discussion in the Introduction and Objectives section).

INTERCONNECTION POINT
The generator interconnections would be at 69 kV, 138 kV, and 230 kV. The 69 kV and 138 kV transmission lines currently exist in the area and the 230 kV tie would be provided via SDG&E's future 230 kV transmission line scheduled for construction in 2007. The 69, 138, 230 kV substation is presently contemplated to be located on property south of the existing South Bay Power Plant.

PROJECT CAPACITY
Duke's application stated an interconnection net capacity of 650 MW (nominal rating) to the interconnection point. The Project includes two 165 MW gas turbines and one 320 MW steam turbine for a total 650 MW of net generation capacity.

INTERCONNECTION FACILITIES STUDY DESCRIPTION
This Study constitutes an "Interconnection Facilities Study" in accordance with the CAISO Tariff. CAISO will be responsible for approval of the final Study report provided to Duke and the recommended plan of service articulated in this report.

This Study includes power flow, transient stability, post-transient voltage stability, and short circuit analyses. In addition, an assessment of the impact this project may have on the tax-exempt status of interest on Local Furnishing Bonds is included. The Study identifies a transmission plan of service and provides corresponding cost estimates.

Duke requested a sensitivity study to the modeling of generation ahead of them in the CAISO Queue. The sensitivity modeled the Sycamore Canyon Combined Cycle (SCCC) project (also known as ENPEX) not dispatched. The following two scenarios were studied:

1. Sycamore Canyon Combined Cycle Project not dispatched.
2. Sycamore Canyon Combined Cycle Project dispatched to 750 MW.

INTERCONNECTION FACILITY STUDY CONCLUSIONS

The Study was conducted by applying the CAISO Grid Planning Criteria, which includes the WECC Reliability Criteria and the NERC Planning Standards.

As described, Duke requested a sensitivity to the generation ahead of them in the CAISO queue. Power flow results show no Category A nor Category B overloaded facilities when SCCC is not dispatched.

When SCCC is dispatched to 750 MW, there are no Category A overloads, although the South Bay to Silvergate 230 kV line loads to 100 percent of its continuous rating three lines exceed 95 percent of their emergency ratings.

There are no planning criteria violations due to the addition of the Duke Project and thus, there are no Delivery Upgrades.

The cost estimates to interconnect Duke's project are based on the use of AIS (air insulated substation) construction. At the time the Memorandum of Understanding between SDG&E and the City of Chula Vista was signed, SDG&E contemplated, for its own use in serving its customers, a relocated South Bay substation comprising 230 kV/69 kV facilities. The footprint for the new substation, currently represented by Duke, does not appear to be sufficient to accommodate all necessary facilities, including 138 kV facilities necessary to accommodate the Duke Project. To accommodate the 138 kV facilities, SDG&E would need a larger substation footprint and the City would be obligated under the MOU to provide a larger parcel of land for these facilities. If the City does not provide an adequately sized footprint, it most likely will be necessary to construct the 230 kV switchyard using GIS (gas insulated substation) technology to accommodate all necessary interconnection facilities. If it is necessary to construct a 230 kV switchyard using GIS technology, the differential in cost between GIS construction and AIS construction would be the responsibility of Duke. SDG&E would request that Duke make an advance in aid of construction for this cost differential that would not be refundable.

All facilities required to directly interconnect the generators are considered Direct Assignment Facilities.

The use of the terms "Direct Assignment Facilities", "Reliability Upgrades," and "Delivery Upgrades" in this report are consistent with the definitions and uses of those terms in

the CAISO Tariff currently in effect. Refer to Appendix A - Definitions for an explanation of terms[1].

The estimated cost to interconnect the Duke Project is $45 million consisting solely of Reliability Upgrades.

The Study results and cost estimates presented in this report are preliminary and non-binding.

Pursuant to the CAISO Tariff, Duke will be responsible for the cost of Direct Assignment Facilities. Should SDG&E build these facilities on behalf of Duke, Duke will be required to pay SDG&E in advance. Duke is obligated to fund the construction of the facilities described as Reliability Upgrades. SDG&E will build the improvements and, upon the commercial operation of the Duke Project, Duke shall be entitled to a repayment subject to applicable CAISO Tariff provisions, equal to the total amount paid to SDG&E for the cost of the Reliability Upgrades plus interest. If Duke elects not to fund Reliability Upgrades, SDG&E is under no obligation to construct the improvements.

The current pro forma Large Generator Interconnection Agreement states that all payments or property transfers made to a Participating Transmission Owner for the installation of Direct Assignment Facilities and Network Upgrades shall be non-taxable, subject to compliance with applicable IRS rulings. SDG&E has not included a tax markup in the estimated costs provided in this report.

Because there are numerous possible system conditions that could be studied, the Study results should be considered valid only for the indicated study assumptions.

The transient stability analysis indicated comparable performance in the post-project case versus the pre-project case.

The post-transient voltage stability analysis indicated equal or better performance in the post-project case as compared to the pre-project case.

The short circuit analysis identified no overstressed breakers requiring upgrades due to the Duke interconnection to SDG&E's transmission system.

An assessment has determined that some aspects of this Project may impact the tax-exempt status of the interest on outstanding Local Furnishing Bonds (LFBs). Upon signing a Large Generator Interconnection Agreement, SDG&E will work with Duke to prepare and file an Application for Interconnection and Order for a Transmission Order pursuant to Section 211 of the Federal Power Act. The purpose of this Application will

[1] FERC issued an Order effective July 1, 2005 regarding implementation of FERC Orders 2003, 2003-A, and 2003-B concerning a standardized pro forma interconnection procedure and agreement, CAISO and SDG&E filed interim procedures and a standardized interconnection agreement on August 30, 2005. Additionally, CAISO and SDG&E filed centralized interconnection procedures and a revised standardized interconnection agreement on November 1, 2005.

be to prevent a loss of any such tax exempt status of interest on the LFBs as a result of SDG&E providing interconnection and transmission service to Duke. Separately, SDG&E has completed its assessment in the 2010 time period to determine whether electric energy from the Duke Project in combination with other local generation may cause an actual or deemed cumulative annual net outbound flow of electric energy from SDG&E's wholly-owned electric facilities in San Diego, Orange and Imperial Counties in violation of the Encumbrances set forth in SDG&E's Appendix B to the Transmission Control Agreement with the CAISO. Our analysis reflects that the flows over these points of interconnection are expected to remain in-bound on a net annual basis with the addition of the Duke project.

INTRODUCTION AND OBJECTIVES

Pursuant to Duke's Interconnection Application and completion of a System Impact Study, SDG&E conducted an Interconnection Facilities Study to interconnect a 650 MW combined cycle generation station that consists of two 165 MW (net output) gas turbines (GT) and one 320 MW (net output) steam turbine. Duke proposed that one GT will be interconnected at 69 kV, one GT will be interconnected at 138 kV, and the steam turbine will be interconnected to a new 230 kV switchyard near the proposed generating facility. The Study analyzes the interconnection of the Project, using the proposed configuration, with a maximum net output of 650 MW to the SDG&E transmission system and assuming that it will have an adequately sized substation footprint based on SDG&E's customary design, cost, and construction practices. Refer to Figure 1: Duke Project Vicinity Map, Figure 2: Duke Project Conceptual Substation Location, Figure 3: Duke Project Conceptual Substation Layout - Initial Design, and Figure 4: Duke Project Conceptual Substation Layout - Ultimate Design for interconnection details.

Figure 1 shows the corridor where SDG&E proposes to construct the 230 kV transmission line as part of SDG&E's Otay Mesa Power Purchase Agreement transmission line project. The Duke proposal would interconnect the steam turbine generator into this line at the location described. A 69 kV switchyard and a 138 kV switchyard with transformation would be located generally on or adjacent to the LNG property cohabitating with the new 230 kV switchyard and the Duke's proposed combined cycle plant (see Figure 2).

PERMITTING AND SCHEDULING

The length of time required for environmental and permitting processes for new transmission or transmission upgrades is uncertain. It depends on many factors, including whether exemption(s) can be obtained from the California Public Utilities Commission's (CPUC's) G.O. 131-D Certificate of Public Convenience and Necessity (CPCN) process or the CPUC's Permit To Construct (PTC) process. The outcome of these processes could increase cost, as well as delay the in-service date. Absent an exemption, the process of obtaining CPUC's approval could take two years or more.

SDG&E believes that the ability to obtain exemptions from the CPCN and PTC processes (in which case an advice letter filing with the CPUC should be sufficient for obtaining the CPUC's approval to proceed with construction) will be enhanced if Duke includes in its application to the appropriate permitting agencies (i.e. CEC) the full scope of transmission and substation additions and upgrades that will be part of the Project.

Duke should also be aware that once the necessary environmental review and permits are obtained, lead time will be required for SDG&E to procure and construct the interconnection facilities. At this time, SDG&E expects that the procurement and construction period for these upgrades will be a minimum of two years from the date all regulatory and environmental permits are obtained and Duke's funding obligations are

accepted by SDG&E. The procurement and construction period also depends on which facilities Duke elects to fund. For the purposes of cost estimating, it is assumed that sufficient suitable pre-graded land acceptable to SDG&E (including environmental state and land entitlements) for the SDG&E substation facilities is available. The design and equipment procurement process can start after the funds are received by SDG&E to cover the design and equipment purchases. Construction can start after receipt of the CPUC approval. The installation of these facilities is contingent on obtaining binding commitments acceptable to SDG&E for the land and easements necessary for it to construct, operate, and maintain the new equipment. SDG&E believes that Duke can assist in obtaining these commitments.

Should Duke choose to modify or change the information provided in the Interconnection Application (i.e. generator information), it may result in the need to update and/or modify the Study, cause a significant delay in completing the Study, and result in additional study costs.

Per Duke's inquiry SDG&E confirmed that an interim connection to the existing 138 kV and 69 kV switchyard at South Bay could be accommodated if construction of the new facilities was not complete at the same time as the Duke Project. In addition, the CAISO confirmed that an interim configuration, if required, would not be cause for a re-study of the Project.

The Direct Assignment Facilities requirements in the transmission plan of service were developed on the basis that the full interconnection capacity requested by Duke can be delivered to the first point of interconnection with the SDG&E system under normal operating conditions. However, even with Direct Assignment Facilities and Reliability Upgrades there could be transmission congestion limits that would require the CAISO to constrain the output on the proposed generating plant.

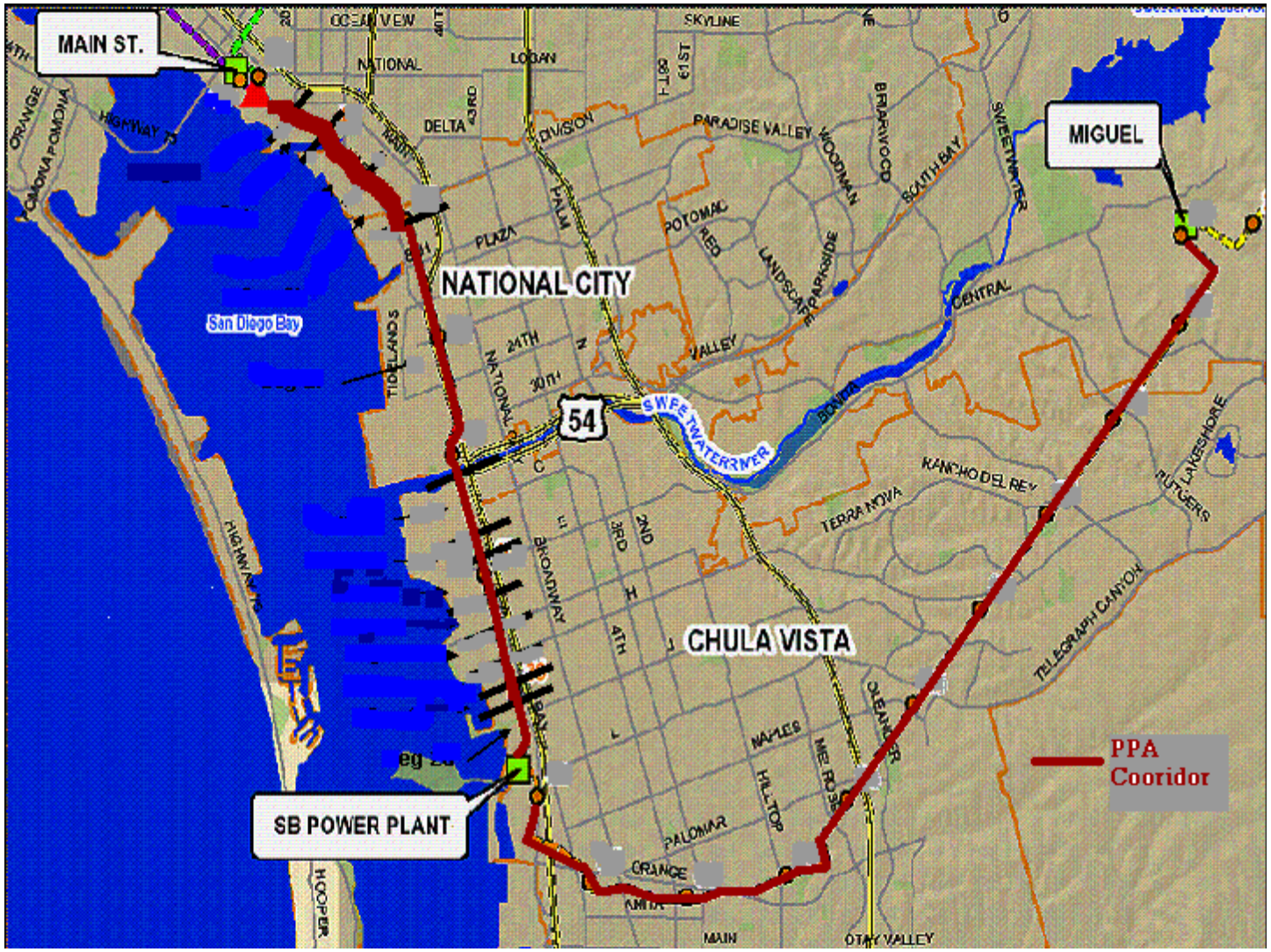

Figure 1: Duke Project Vicinity Map

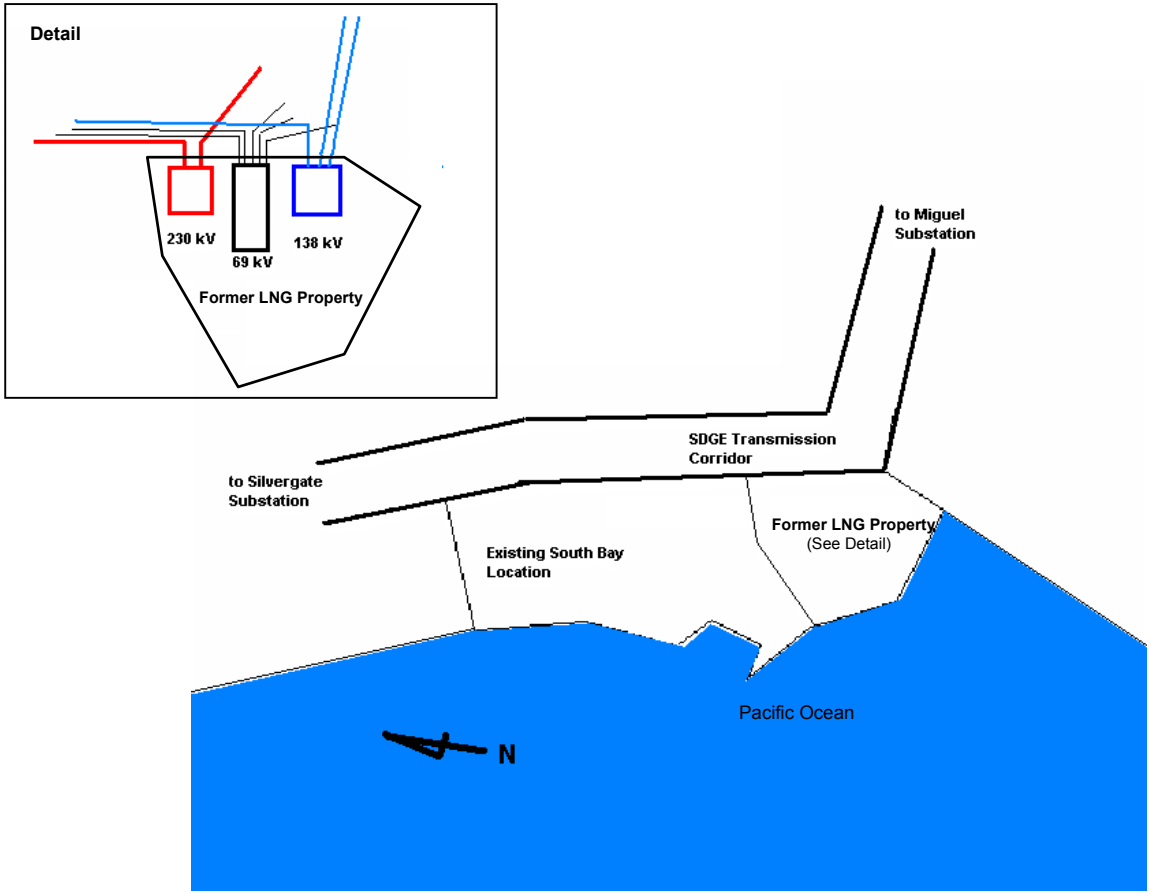

Figure 2: Duke Project Conceptual Substation Location

Duke Project Conceptual Substation Layout
Initial Design

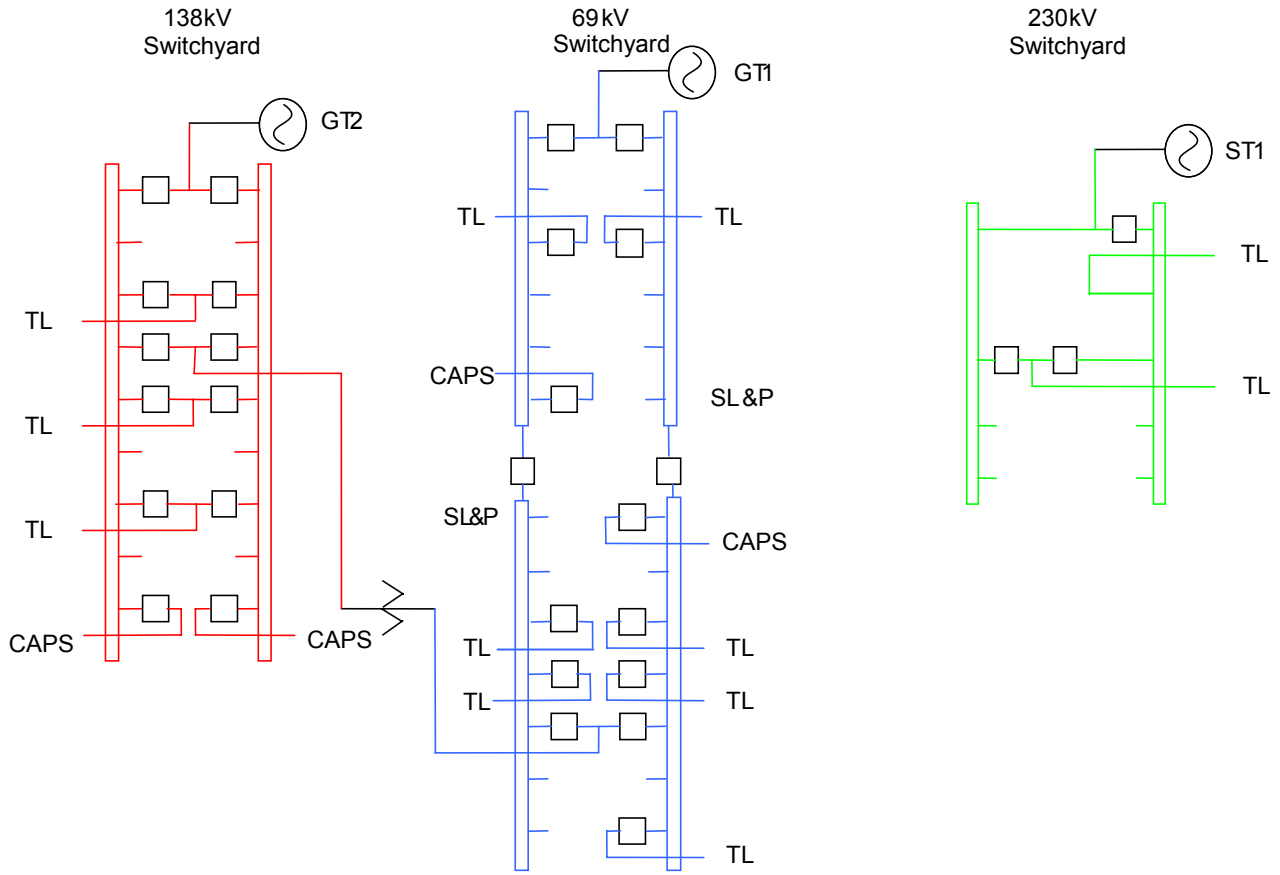

Figure 3: Duke Project Conceptual Substation Layout* – Initial Design

* This layout does not necessarily represent SDG&E's final plan of service for the relocated switchyard.

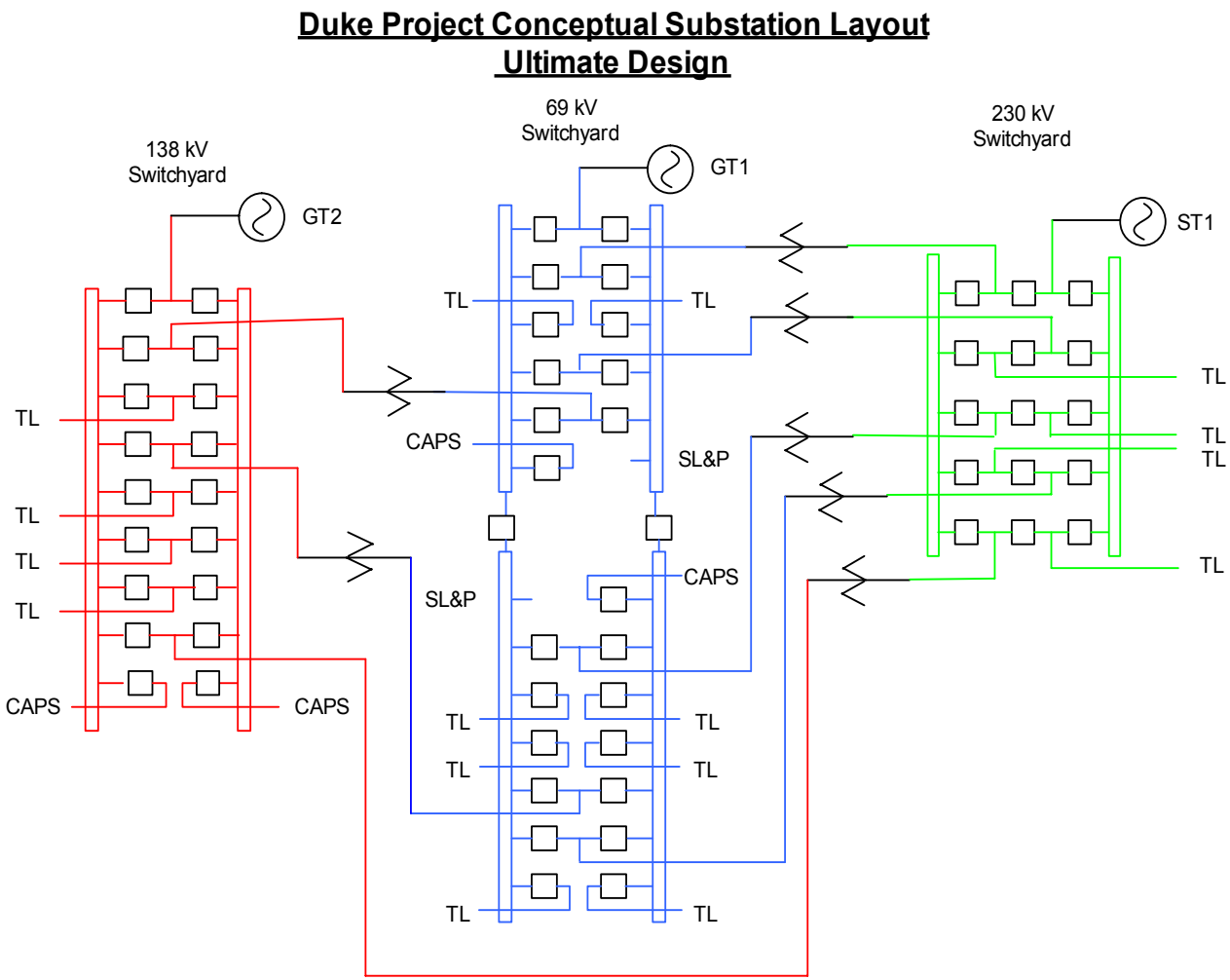

Figure 4: Duke Project Conceptual Substation Layout – Ultimate Design

STUDY RESULTS AND PLAN OF SERVICE DEVELOPMENT

Power flow analysis results have been provided in Appendix B – Power Flow Summary to show the anticipated flows on affected SDG&E transmission lines for NERC Category A, Category B and selected Category C and D conditions.

The cases that were developed simulate the SDG&E system with all planned transmission elements in-service for the 2010 benchmark case. The heavy summer cases include high import and low generation dispatch scenarios with heavy system load to reflect stressed system conditions.

This Study investigated compliance with NERC/CAISO Category A, B, and C criteria. Duke requested a sensitivity that did not include the dispatch of the Sycamore Canyon Combined Cycle (SCCC) project. Thus, two power flow cases were developed – one case with SCCC not dispatched and one case with SCCC dispatched to 750 MW.

Power Flow Results

The power flow analysis studied all voltage level contingencies in the SDG&E transmission system for both scenarios. These results are valid only for the system configuration as modeled in this study and may not apply to future transmission system upgrades.

There were no NERC/CAISO Category A normal overloads caused solely by the addition of the Duke Project for either of the two studied scenarios. However, with the SCCC dispatched to 750 MW, the South Bay to Silvergate 230 kV transmission line loads to 100 percent of its continuous rating with the addition of the Duke Project.

There were no NERC/CAISO Category B overloads caused solely by the addition of the Duke Project when SCCC was not dispatched.

There were no NERC/CAISO Category B overloads caused solely by the addition of the Duke Project when SCCC was dispatched to 750 MW. As a matter of interest, three lines exceed 95 percent of their emergency ratings with the addition of the Duke project. When SCCC is dispatched to 750 MW and the Duke Project is fully dispatched, the Sycamore to Carlton Hills Tap 138 kV line loads to 99 percent of its emergency rating. The Silvergate to Old Town 230 kV line loads to 96 percent of its emergency rating for the loss of the Silvergate to Old Town Tap line. Conversely, under the same dispatch scenario, the Silvergate to Old Town Tap line loads to 97 percent of its emergency rating for the loss of the Silvergate to Old Town line.

The SCCC developer filed an Interconnection Application that pre-dates the Duke Interconnection Application to the CAISO. The SCCC application is still active and maintains a higher position in the CAISO Interconnection Queue. If the SCCC developer fails to construct or the project is removed from its current queue position by the CAISO, the high loading would not occur.

There were several NERC/CAISO Category A, B, and C pre-project overloads. A complete listing of all SDG&E power flow results is included in Appendix B.

These conclusions are subject to the assumptions and conditions reflected in this Study.

Transient Stability Results

The transient stability cases are based on a WECC's heavy autumn case. The WECC case was updated to reflect new projects in the southwestern United States. Pre-project and post-project cases were developed from this case. SDG&E's 2010 heavy autumn system load is the same magnitude as SDG&E's 2010 heavy summer system load. The system interchange was modeled at -2850 MW.

Modeling six cycle faults for the pre-project and post-project scenarios at the South Bay 69 kV bus and the 138 kV bus produced similar voltage and frequency responses. The similarity in character and magnitude suggest that the Project's response to system events would not significantly impact the system. A six cycle fault at the 230 kV bus in the post-project case exhibits a similar voltage and frequency response.

Transient stability plots are in Appendix C.

Post-Transient Voltage Stability Results

Reactive margin (VQ) curves were generated for selective outages while monitoring three busses in the South Bay area (see Base Case Assumptions section). The analysis indicated that reactive margins are better (greater negative value) in the post-project case versus the pre-project case. Table 1 shows reactive margins at the 0.90 per unit voltage for each case considered. The data indicates that the reactive margins are greater for all of the outages studied in the post-project scenarios.

The VQ curves are in Appendix D.

Table 1: Reactive Margin @ 0.90 Per Unit Voltage for Selective Busses and Outages

Outage	Monitored Bus					
	South Bay 69 kV Bus		South Bay 138 kV Bus		Silvergate 230kV Bus	
	Pre-Project	Post-Project	Pre-Project	Post-Project	Pre-Project	Post-Project
Palo Verde-Devers	**-202**	**-304**	**-284**	**-403**	**-723**	**-870**
Palo Verde-Hassayampa	**-203**	**-305**	**-285**	**-404**	**-726**	**-873**
Imperial Valley-Miguel	**-157**	**-274**	**-211**	**-352**	**-521**	**-720**
Imperial Valley-Central	**-187**	**-289**	**-259**	**-376**	**-661**	**-804**
Hassayampa-North Gila	**-258**	**-353**	**-373**	**-485**	**-884**	**-1016**
North Gila-Imperial Valley	**-245**	**-342**	**-352**	**-467**	**-838**	**-976**
Otay Mesa-Tijuana	**-212**	**-312**	**-296**	**-412**	**-718**	**-872**
Old Town-Silvergate	**-217**	**-316**	**-309**	**-424**	**-697**	**-817**
Otay Mesa-Silvergate*	**-161**	**-**	**-220**	**-**	**-404**	**-**
Otay Mesa-South Bay*	**-**	**-290**	**-**	**-382**	**-**	**-613**
South Bay-Silvergate*	**-**	**-290**	**-**	**-382**	**-**	**-613**

* The Otay Mesa-Silvergate line did not exist in the Post-Project case.
* The Otay Mesa-South Bay and South Bay-Silvergate lines did not exist in the Pre-Project cases.

Short Circuit Results

SDG&E conducted detailed short circuit studies with three line-to-ground and single line-to-ground faults to examine the impact of the Duke Project on the system. The Aspen Version 9.0 program was used for conducting the short circuit study.

Based on SDG&E's planning criteria, an overstress of 115% of short circuit duty (nameplate rating) is permissible for existing non-generator substation breakers, 230 kV and below, and 100% of short circuit duty for existing generator breakers.

Two scenarios were studied:

1. Pre-Project (without Duke)
2. Post-Project (with Duke)

Three line-to-ground (3LG) and single line-to-ground (SLG) faults were simulated with and without the project at all busses in the system, 69 kV and above. Table 2 summarizes the fault duties for busses in the vicinity of the project. The one-line plots for these busses are shown in Appendix E – Short Circuit Results.

Table 2: 3LG and SLG Fault Duties for Selected Busses

Faulted Bus	Breaker Rating (kAmps)	Pre-Project		Post-Project	
		Max 3LG Bus Fault (kAmps)	Max SLG Bus Fault (kAmps)	Max 3LG Bus Fault (kAmps)	Max SLG Bus Fault (kAmps)
South Bay 69 kV	38 - 42	27.0	27.1	22.4	23.1
South Bay 138 kV	37 - 42	27.8	28.8	20.1	15.4
South Bay 230 kV	N/A	21.9	14.6	22.3	16.9

No overstressed breakers have been identified as a result of the Duke interconnection.

Local Furnishing Bonds

SDG&E has financed substantial portions of its transmission and distribution systems with proceeds from $687,000,000 of outstanding Local Furnishing Bonds (LFB) issued by the City of San Diego and the City of Chula Vista. Interest on these bonds is tax-exempt. Pursuant to applicable IRS private letter rulings, if the proposed Project would cause impairment of the tax-exempt interest on these bonds, Duke would pay any resulting costs to SDG&E in mitigating the impairment to the continued tax-exempt status of interest on the LFBs (an “Impairment”).

SDG&E has determined that if Duke requires the installation and operation (i) of 138 kV facilities in the relocated South Bay substation or (ii) of 230 kV facilities using GIS (gas insulated substation) technology to accommodate all interconnection facilities, an Impairment of the LFBs may occur if Duke does not sell the Project’s electric output to SDG&E. This Impairment may result from SDG&E constructing the 138 kV facilities and the 230 kV facilities using GIS technology sooner, larger, more costly, or of a different design than SDG&E would undertake solely to service its local furnishing customers.

As contemplated by the ISO Tariff and SDG&E’s Transmission Owner Tariff, SDG&E will work with Duke to prepare and file an Application for Interconnection and Order for a Transmission Order pursuant to Section 211 of the Federal Power Act. This filing will be made after the Large Generator Interconnection Agreement is signed. The purpose of this Application will be to prevent a loss of any such tax exempt status of interest on the LFBs (as well as preventing a loss of SDG&E’s ability to deduct interest expense on the LFBs for tax purposes) as a result of SDG&E providing interconnection and transmission service to Duke, and

thereby to enable SDG&E to provide the service consistent with certain bond covenants given by SDG&E for the benefit of the owners of those LFBs. By this means, SDG&E will concur in the Application, confirm the factual statements made therein by Duke based on representations by SDG&E, and will waive its rights to a prior request and an evidentiary hearing under Section 211(a) and to a proposed order under Section 212(c), if the Commission issues an order substantially in the form requested.

Separately, SDG&E has completed its assessment in the 2010 time period to determine whether electric energy from the Duke Project in combination with other local generation may cause an actual or deemed cumulative annual net outbound flow of electric energy from SDG&E's wholly-owned electric facilities in San Diego, Orange and Imperial Counties in violation of the Encumbrances set forth in SDG&E's Appendix B to the Transmission Control Agreement with the CAISO. To complete this assessment, SDG&E has utilized ABB's Grid View software, a market simulation tool, to model the net energy flow into the SDG&E service territory. Our analysis reflects that the flows over these points of interconnection are expected to remain in-bound on a net annual basis with the addition of the Duke project.

However, if in the future the dispatch of electric energy by owners of existing and new generation located in the San Diego that is not sold to SDG&E for service to its local furnishing customers, SDG&E may be required to effect a tax call on the LFBs in the absence of remedial measures that prevent annual net outbound flows from SDG&E's local transmission and distribution system, as contemplated by SDG&E's Appendix B to the Transmission Control Agreement ("TCA") with the CAISO. Under the CAISO Tariff and TCA, however, the CAISO is obligated to affect such remedial measures to avoid an Impairment that would otherwise trigger a tax call. Such remedial measures, for example, would be undertaken by the CAISO through rejection of schedules or bid protocols sufficient to avoid net annual outbound flows resulting from the Duke Project and other generation within the San Diego basin not utilized to service local furnishing customers , subject to the annual net importer limitation.

Cost Estimates

Based on the Study results, Table 3 summarizes the scope of transmission reinforcements and associated cost estimates for interconnection of the Project. Though there were no Delivery Upgrades identified in this Study, Duke will be subject to any dispatch constraints that may be required according to CAISO congestion management protocols.

Cost and construction schedule estimates assume that SDG&E can obtain necessary rights to access and construct required facilities.

Table 3: Cost Estimates (in millions)[2]

Facility	Direct Assignment Facilities[3]	Reliability Upgrades[4]	Delivery Upgrades[5,6]
69, 138, & 230 kV Switchyard Equipment	$X	-	-
230 kV Switchyard & 230 kV Loop-in	-	$45	-

The costs in Table 3 reflect a 2010 in-service date.

If it is necessary to construct a 230 kV switchyard using GIS technology, the differential in cost between GIS construction and AIS (air insulated substation) construction would be the responsibility of Duke. SDG&E would request that Duke make an advance in aid of construction for this cost differential that would not be refundable. The cost differential is estimated at $15 million.

[2] All cost estimates in this report are preliminary and non-binding. All costs shown are in "as year spent dollars." Taxes, site preparation, landscaping, undergrounding, walls, gates, driveways, CAISO metering, environmental and licensing costs are not included. Cost estimates also do not include acquisition of new transmission Right-Of-Way (ROW). All new ROW costs are assumed to be the responsibility of Duke.

[3] The New Facility Owner (NFO) is financially responsible for the Direct Assignment Facilities.

[4] The NFO is obligated to advance funds to SDG&E for Reliability Upgrades and will be reimbursed upon commercial operation of the plant.

[5] The NFO may elect to advance funds to SDG&E for Delivery Upgrades and will be reimbursed upon commercial operation of the plant. If the NFO does not advance funds, the NFO will be subject to dispatch constraints.

[6] Upgrades needed to eliminate overloads for Category B (single contingency) conditions.

BASE CASE ASSUMPTIONS

The pre-project case (benchmark case) was based on the power flow cases used by SDG&E for its own internal system planning studies and includes the most recently available WECC power flow models. Duke's proposed commercial operation date is January 2010. Thus, a 2010 Heavy Summer scenario was modeled for the Study based on the case used by SDG&E for its own internal transmission expansion studies. The power flow case developed within the CAISO Stakeholder process in 2005 is being used as the pre-Project case. A complete set of projects needed by SDG&E due to its internal system load growth, new generator interconnection requests ahead of the Duke Project in the CAISO's Queue, and inter-regional transmission expansion planning (the WECC planning process), was established in the 2005 Stakeholder process. This provided a benchmark upon which to perform these generation interconnection studies. As a sensitivity, the 2010 Heavy Autumn case was also utilized.

Power Flow Database

1. Pre-Project

   Duke requested, and it is consistent with SDG&E's plans, that this Interconnection Facilities Study include the Sunrise Powerlink Project. The Sunrise Powerlink Project consists of a major 500 kV transmission line terminating at SDG&E's existing Imperial Valley Substation and at a proposed 500/230 kV substation called Central. The Central Substation provides the transformation to 230 kV and the interconnection with the existing SDG&E transmission grid at Sycamore Canyon. In addition, projects defined in the recently completed SDG&E 2005 Grid Assessment Study & Transmission Expansion Plan are also included.

2. Post-Project

   The post-project model includes the pre-project model and the addition of the Duke 650 MW combined cycle project. This includes an additional 230 kV bus looping the SDG&E proposed 230 kV transmission line that interconnects the 320 MW steam turbine generator. Figure 5: 2010 South Bay Area Transmission System provides a conceptual one-line diagram illustrating the 2010 transmission system in the area of the South Bay Power Plant. The figure also identifies significant modeling changes differing from the Duke System Impact Study.

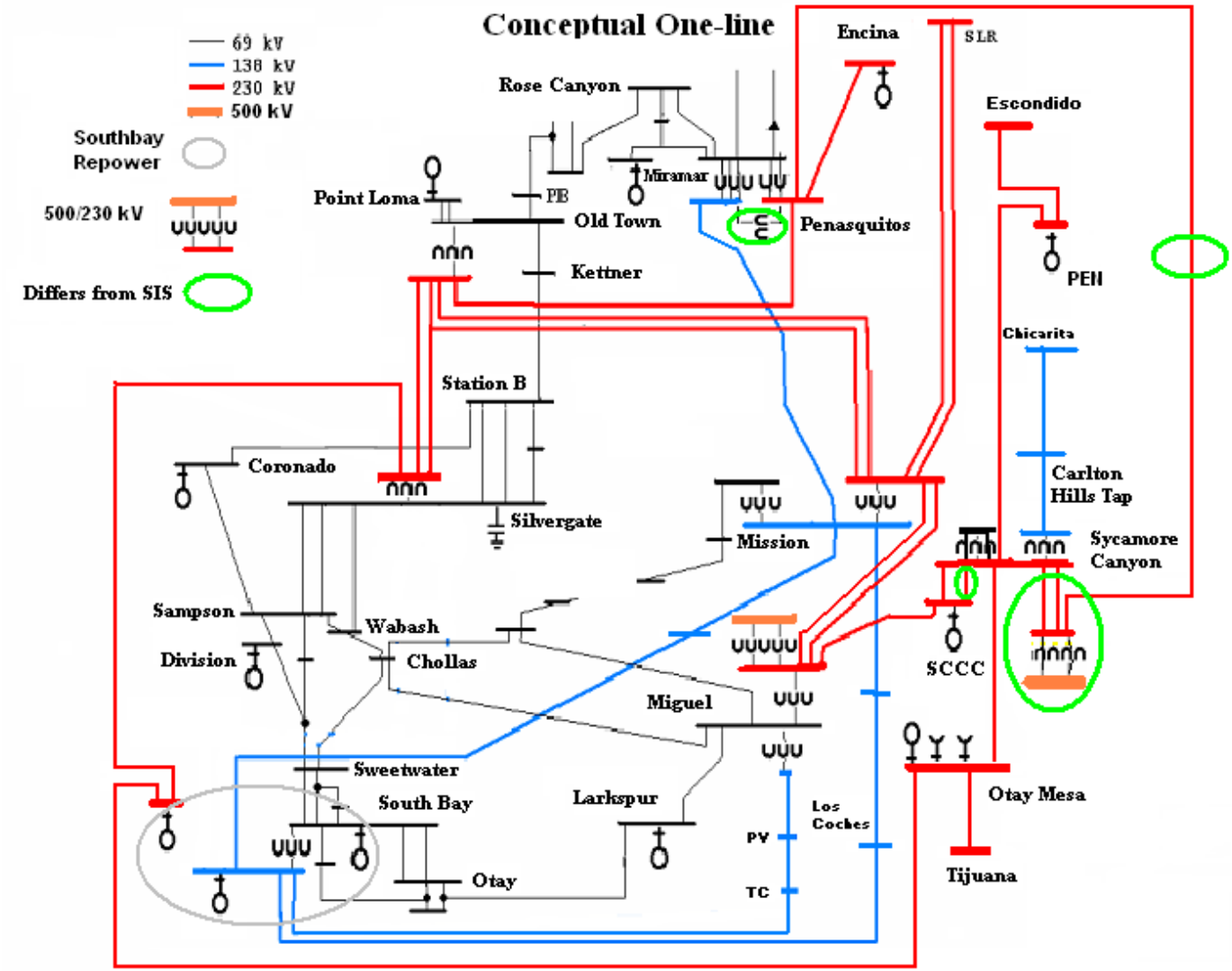

Figure 5: 2010 South Bay Area Transmission System

3. Reliability Criteria

A system reliability evaluation consists primarily of determining if thermal overloads exist, that voltages are within criteria (not too high or low), and that the system is stable (the system should not oscillate excessively and generators should remain synchronized with one another). Additional criteria may include assurance that there is sufficient reactive power available. Evaluation of these criteria must be conducted for credible "emergency" conditions that the system might sustain, such as loss of a single or double circuit line, a transformer, or a combination of these facilities.

Power Flow
The Study was conducted by applying the CAISO Grid Planning Criteria, which includes the WECC Reliability Criteria and the NERC Planning Standards.

The following conditions were considered for the SDG&E system:

a. All facilities in service (N-0 NERC/CAISO Category A)
b. All single contingencies including generators, lines and transformers (N-1 NERC/CAISO Category B)
c. Credible double contingencies (N-2 NERC/CAISO Category C): two lines on common structures or right-of-way, substation common bay, and two generators at a common switchyard

4. Study Methodology

This section of the report provides a summary of methods employed for determining power flow results. This Study evaluates only the impact of interconnecting the proposed Duke generation project.

Power Flow
Under the proposed configuration of the Duke interconnection, the system is most stressed by dispatching generation internal to the SDG&E service territory. Specifically, generators connected to the 230 kV transmission in the southern portion of the SDG&E system were modeled at full output. Therefore, SCCC, Palomar Energy (PEN), and Otay Mesa power plant, were fully dispatched and the SDGE interchange was adjusted accordingly.

Power flow analysis considers a snapshot in time where transformer tap changers and static VAR devices have had time to adjust. Phase shifting transformers were not allowed to move since the majority of WECC phase shifting transformers have manual operation and a swing bus balances the system during each contingency scenario.

Traditional power flow analysis was used to evaluate thermal (and voltage) performance of the system under NERC/CAISO Category A, B and C criteria. Reported thermal overloads were limited to the condition where a modeled transmission component is loaded over 100% of its appropriate emergency MVA rating (MVA2, as entered in the power flow database), and the incremental increase in component loading, between pre-project and post-project, exceeds 1%.

NERC/CAISO Category A voltage violations were limited to the conditions where per unit voltages are less than 0.95 or greater than 1.05. NERC/CAISO Category B and Category C voltage violations were limited to the conditions where, per unit voltages are less than 0.90 or greater than 1.10. In addition, only voltage deviations greater than 5% between the pre and post-contingency were recorded.

All power flow analyses were conducted with version 15.1 of General Electric's PSLF software.

Transient Stability

The transient stability cases are based on a WECC heavy autumn case. The WECC case was updated to reflect new projects in the southwestern United States. Pre-project and post-project cases were developed from this case. SDG&E's 2010 heavy autumn system load is the same magnitude as SDG&E's 2010 heavy summer system load. The system interchange was modeled at 2850 MW.

1. Pre-Project

   The pre-project case models the existing South Bay Power Plant with all units at South Bay on-line, with the exception of the 13 MW gas turbine.

2. Post-Project

   The post-project case models the proposed Duke repower project with all units on-line.

Post-Transient Voltage Stability

A comparison of reactive margin available to support long term voltage stability was conducted. Selected bulk contingencies were modeled and reactive margin availability was monitored at three SDG&E busses. The contingencies considered were:

1. Palo Verde – Devers 500 kV
2. Palo Verde – Hassayampa 500 kV
3. Imperial Valley – Miguel 500 kV
4. Imperial Valley – Central 500 kV
5. Hassayampa - North Gila 500 kV
6. North Gila – Imperial Valley 500 kV
7. Otay Mesa – Tijuana 230 kV
8. Old Town – Silvergate 230 kV
9. Otay Mesa - Silvergate (pre-project) 230 kV
10. Otay Mesa - South Bay (post-project) 230 kV
11. South Bay - Silvergate (post-project) 230 kV

The monitored busses were:

1. South Bay 69 kV bus (22768)
2. South Bay 138 kV bus (22772)
3. Silvergate 230 kV bus (22430)

The Silvergate bus was chosen because it existed in both the pre-project and post-project cases. A heavy autumn 2010 cases was used with the existing South Bay Power Plant modeled in the pre-project case and the proposed Duke repower project in the post-project case. Powertech Incorporated's VSAT 5.2 was used to screen for reactive margins.

1. Pre-Project

   The pre-project case models the existing South Bay Power Plant with all units at South Bay on-line, with the exception of the 15 MW gas turbine.

2. Post-Project

   The post-project case models the proposed Duke repower project with all units on-line.

Short Circuit Database

1. Pre-Project

   The database for determining if any overstressed breakers exist pre-project included all generation in the CAISO Queue in SDG&E's service territory that have applications pre-dating the proposed project.

2. Post-Project

   From the pre-project case, a case was developed to simulate the Project addition.

STUDY ASSUMPTIONS

The following assumptions have been used during the course of this Study. The Study results, recommendations, and cost estimates may vary if these assumptions are changed.

1. Unless specifically known, typical data for generators and associated system upgrades such as lines, transformers, etc. were used for setting up the power flow base cases and the short circuit database.

2. The power flow and short circuit analyses were based on the data provided in the Interconnection Application and subsequent information.

3. SDG&E has financed substantial portions of its transmission and distribution systems with proceeds from Local Furnishing Bonds (also known as Industrial Development Bonds or IDBs) issued by the City of San Diego and the City of Chula Vista. Interest on these bonds is tax-exempt. Pursuant to IRS requirements, if the proposed Project would cause impairment of these bonds, the developer would need to mitigate the resulting costs to SDG&E.

4. Any potential overloads or voltage problems that exist in the pre-project case, but have not been aggravated by the generation interconnection, have been ignored for the purpose of this Study.

5. Generators in the CAISO Queue that are interconnecting in SDG&E's service territory that will be in-service by the Project's commercial operation date were modeled in the power flow. The CAISO Queue is shown in Appendix F – CAISO Controlled Grid Generation Queue.

6. All prior generators in the Queue in SDG&E's service territory were modeled for the short circuit analysis.

7. The SDG&E document entitled, "Technical Standards for Load and Non-SDG&E Owned Generator Interconnections" located on the SDG&E web site provides additional information about the SDG&E technical standards. The Project must meet SDG&E technical standards.

TECHNICAL REQUIREMENTS/SPECIFICATIONS

These requirements are included but not limited to the following:

1. The Project's interconnection substation (the substation that is used to interface the Project to the transmission system) must meet SDG&E substation standards.

2. The SDG&E document entitled, "Technical Standards for Load and Non-SDG&E Owned Generator Interconnections" located on the SDG&E web site provides additional information about the SDG&E technical standards. The Project must meet SDG&E technical standards.

3. It must be possible to automatically control the production from the Project by a single remote signal so that it does not exceed a certain MW limit. The production limit would recognize the dispatch limit provided by CAISO or SDG&E, the presence of a contingency detection signal, and local values of frequency and/or voltage. It will be possible to change the control algorithms from time to time, if necessary.

4. The production must not at any time exceed the production limit by more than five percent, and the one-minute average plant output will not exceed the production limit.

5. The control will take place in a manner that it will be possible to control the production quickly enough so that it can be reduced to below 20 percent of the maximum power in less than two seconds.

6. CAISO/SDG&E may limit the operation and/or disconnect or require the disconnection of a generating facility from the SDG&E system at any time, with or without notice, in the event of an emergency or to correct unsafe operating conditions. CAISO/SDG&E may also limit the operation and/or disconnect or require the disconnection of a generation facility from the SDG&E system upon the provision of reasonable notice:

    a. To allow for routine maintenance, repairs or modifications to the SDG&E system,

    b. Upon CAISO/SDG&E's determination that a facility is not in compliance with protocol, or

    c. Upon termination of the Interconnection Agreement.

7. Generating facilities will not inject Direct Current greater than 0.5% of rated output current into the SDG&E system under either normal or abnormal operating conditions.

8. Starting or rapid load fluctuations on induction motors can adversely impact SDG&E system voltage. Corrective step-switched capacitors or other techniques may be necessary and may cause undesirable ferro-resonance. When these countermeasures (e.g. additional capacitors) are installed on the plant side of the interconnection point, SDG&E must review these measures. Additional equipment may still be required to resolve this problem.

9. The generator will contain a signal showing the status of the plant, e.g. whether the plant has stopped due to lack of fuel (water), forced outage, external signals, etc. Together with signals from the system operator and local measurements (for instance, voltage and frequency) this signal will be part of a logic managing the release of the generators for operation. Signals and principles are arranged for the individual generation units.

10. The developer will provide values of harmonics currents created by the generation facility at the Point of Interconnection to the SDG&E system. These harmonics currents, expressed in percent of the total generated current (15-minute demand) at the system frequency of 60 Hz (fundamental), should be within the limits specified by IEEE Standard 519-1992. These limits are a function of the short circuit duty level at the point of delivery to the SDG&E system.

11. SDG&E requires that all generators connected to the SDG&E transmission system:
    a. Demonstrate low voltage ride-through capability and
    b. Maintain an appropriate power factor within an acceptable range consistent with CAISO tariff requirements

12. Communication, protection, and control facilities including telemetering equipment will be required at the Project's switchyard to provide status of the 69, 138, and 230 kV circuit breakers and monitoring of the generator output.

13. Per SDG&E "Technical Standards for load and Non-SDG&E Owned Generator Interconnections, "all Participating Generators shall maintain the CAISO specific voltage schedule at the transmission interconnection points to the extent possible while operating within the power factor range specified in their interconnection agreements or, for Regulatory Must-Take Generation, Regulatory Must Run Generation and Reliability Must-Take Generation consistent with existing obligations. For Generating Units, that do not operate under one of these agreements, the minimum power factor range will be within a band of 0.9 lag (producing VARs) and 0.95 lead (absorbing VARs) power factors.

14. The generators/project must be able to dynamically control the bus voltage and maintaining it within a desired range within the capability of the generator power factor defined above.

15. Any AC-DC-AC converter must be equipped with forced-commutated inverters.

16. SDG&E reserves the right to measure the actual flicker and harmonic levels before the interconnection can be allowed. If the measurements show that actual flicker and harmonic levels do not meet SDG&E standards during actual operation, then the plant will be disconnected until mitigation measures are taken by the developer to resolve the flicker and harmonic problems.

A Sempra Energy company

CONFIDENTIAL

"In accordance with the "Non-Disclosure and Use of Information Agreement" (the "Agreement") between SDG&E and the CAISO, the CAISO must cause each of its employees who will have access to this confidential information to acknowledge that they have read the Agreement and agree to abide by all of its terms regarding use and disclosure of this confidential information, and must cause such persons to execute Individual Agreements in the form attached as Attachment A to the "Agreement."

Project Developer

Duke Energy South Bay, LLC

Project Name

Duke Energy South Bay, LLC

INTERCONNECTION FACILITIES STUDY

Final Draft

Appendix

May 9, 2006

Study Performed for Duke Energy South Bay, LLC
By San Diego Gas & Electric Company

TABLE OF CONTENTS for APPENDIX

Appendix A – Definitions 3
Appendix B – Power Flow Summary 5
Appendix C – Transient Stability Plots 9
Appendix D – Post-Transient Voltage Stability 24
Appendix E – Short Circuit Results 31
Appendix F – CAISO Controlled Grid Generation Queue 43

Appendix A – Definitions

Category A Contingency	All facilities in service, no contingency.
Category B Contingency	Event resulting in the loss of a single element. (*The CAISO considers the loss of a critical generator followed with redispatch of the remaining system generation and the subsequent loss of any single element as a Category B contingency.)*
Category C Contingency	Event resulting in the loss of two or more (multiple) elements.
Category D Contingency	Extreme event resulting in two or more (multiple) elements removed or cascading out of service.
Delivery Upgrade	The transmission facilities, other than Direct Assignment Facilities and Reliability Upgrades, necessary to relieve constraints on the ISO Controlled Grid and to ensure the delivery of energy from a New Facility to load.
Direct Assignment Facility	The transmission facilities necessary to physically and electrically interconnect a New Facility Operator to the ISO Controlled Grid at the point of interconnection.
Reliability Upgrade	The transmission facilities, other than Direct Assignment Facilities, beyond the first point of interconnection necessary to interconnect a New Facility safely and reliably to the ISO Controlled Grid, which would not have been necessary but for the interconnection of a New Facility, including network upgrades necessary to remedy short circuit or stability problems resulting from the interconnection of a New Facility to the ISO Controlled Grid. Reliability Upgrades also include, consistent with WECC practice, the facilities necessary to mitigate any adverse impact a New Facility's interconnection may have on a path's WECC path rating.

Appendix B – Power Flow Summary

Thermal Analysis: MVA1

0.9MVA1Trigger	**>0.9MVA1**									
Base or Cont	Base									
			Heavy Autumn		**Heavy Summer Cases**					
MVA1 pu Loading			**1**	**2**	**3**	**4**	**5**	**6**	**7**	
Monitored Element	**MVA1**	MVA2	10ha_post	10ha_pre	2010hs_n1_ v43post_sxcfe	2010hs_n1_ v43postli_s_sxcfe	2010hs_n1_ v43preSY_sxcfe	2010hs_n1_ v43xpreSY_cfe_nosxcc	2010hs_n1_ v43xpreSY_sxcfe	
LINE LEATHERS 92kV-MIDWAY 92kV ck1	132	132	0.95	0.95						**OK**
LINE SYCAMORE 69kV-SCRIPPS 69kV ck1	97.5	136.8	1.03							**MVA1 = 116**
	116	136.8			0.92		0.93		0.96	
TRAN SYCAMORE 230kV-SYCAMORE 69kV ck2	224	285			0.95	0.94	0.94		0.94	**OK**
TRAN SOUTHBAY 69kV-SOUTHBAY 138kV ck1	140	164					1.07	0.99	1.00	**Used # 7**
LINE NILAND 161kV-BLYTHE 161kV ck1	165	165						0.91		
LINE SYCAMORE 138kV-CARLTHTP 138kV ck1	248	248				0.99				
TRAN SYCAMORE 230kV-SYCAMORE 69kV ck1	224	285			0.92	0.91	0.91		0.90	
LINE POWAY 69kV-POMERADO 69kV ck1	97.5	143			0.91		0.92			**OK**
LINE ROA-230 230kV-LRP-230 230kV ck1	388	430			0.91	0.91	0.91	0.91	0.91	
LINE ROA-230 230kV-LRP-230 230kV ck2	388	430			0.91	0.91	0.91	0.91	0.91	
TRAN SYCAMORE 230kV-SYCAMORE 138kV ck1	392	525			0.94					
TRAN CIP-230 230kV-CIP-115 115kV ck1	100	100			0.92	0.92	0.92	0.92	0.92	
LINE SILVERGT 230kV-SOUTHBAY 230kV ck1	912	1176			1.00	1.00				**OK**

Thermal Analysis: MVA2

MVA2Trigger	>MVA2
0.9MVA2Trigger	(All)
Contingency Type	(All)
Contingency Category	(All)
Area	22
Zone	(All)
LINE, TRAN, or ERROR	(All)
Base or Cont	(All)

			2010 Heavy Autum Cases		2010 Heavy Summer Post Case	2010 Heavy Summer Pre Case No SXCC	2010 Heavy Summer Pre Case	
MVA2 pu Loading								
Monitored Element	Contingency Description	MVA2	10ha_post	10ha_pre	2010hs_n1_v43post_sxcfe	2010hs_n1_v43xpreSY_cfe_nosxcc	2010hs_n1_v43xpreSY_sxcfe	
LINE SYCAMORE 69kV-SCRIPPS 69kV ck1	SYCAMORE - PENSQTOS 1 230kV	136.8					1.04	**Pre Existing**
TRAN SYCAMORE 230kV-SYCAMORE 69kV ck2	SYCAMORE - SYCAMORE 1 69/230kV	285			1.05		1.03	
TRAN SOUTHBAY 69kV-SOUTHBAY 138kV ck1	SAMPSON - DIVISION 1 69kV	143		1.03				
	DIVISION - NAVSTMTR 1 69kV	143		1.11				
	NATNLCTY - SWTWTRTP 1 69kV	143		1.03				
	GRNT HLL - SOUTHBAY 1 138kV	164				1.15	1.16	**Pre Existing**
	MISSION - GRNT HLL 1 138kV	164				1.08	1.10	
LINE SYCAMORE 138kV-CHCARITA 138kV ck1	SYCAMORE - PENSQTOS 1 230kV	204.1			1.08		1.12	**Pre Existing**
	NORTHCTY - PENSQTOS 1 138kV	204.1					1.01	
	PENSQTOS - PENSQTOS 1 138/230kV	204.1			1.08	1.01	1.10	
	SYCAMORE - CARLTHTP 1 138kV	204.1			1.04		1.06	
LINE SYCAMORE 138kV-CARLTHTP 138kV ck1	IMPRLVLY - MIGUEL 1 500kV	248		1.03				**Pre Existing**
	OTAYMESA - MLMS3TAP 1 230kV	248		1.00				
TRAN ESCNDO50 138kV-ESCNDIDO 69kV ck2	CALAVRTP - CANNON 1 138kV	63	1.19	1.20	1.19	1.19	1.19	**Common Operator Action**
LINE WABASH 69kV-MAIN ST 69kV ck1	SAMPSON - DIVISION 1 69kV	100.6		1.28				**Expansion Project**
	DIVISION - NAVSTMTR 1 69kV	100.6	1.05	1.49	1.00			
	NATNLCTY - SWTWTRTP 1 69kV	100.6		1.08				
LINE OTAY 69kV-OTAYLKTP 69kV ck1	MIGUEL - BORDER 1 69kV	50.3	1.00	1.00				**Pre Existing**
LINE LOSCOCHS 69kV-GRANITTP 69kV ck1	LOSCOCHS - ALPINE 1 69kV	102	1.02	1.02	1.01	1.04	1.07	
	EL CAJON - GRANITE 1 69kV	102	1.01	1.00	1.01	1.02	1.05	
LINE EL CAJON 69kV-LOSCOCHS 69kV ck1	LOSCOCHS - GRANITTP 1 69kV	55.1		1.03				**Pre Existing**
	LOVELAND - GRANITTP 1 69kV	55.1				1.02	1.05	
LINE ESCNDIDO 69kV-FELCTATP 69kV ck1	ESCNDIDO - ASH 1 69kV	102.1	1.01	1.01				
	ESCNDIDO - FELICITA 1 69kV	102.1	1.00					
LINE DOUBLTTP 138kV-FRIARS 138kV ck1	PENSQTOS - PENSQTOS 1 138/230kV	150.8			1.04	1.10	1.11	
TRAN SYCAMORE 230kV-SYCAMORE 69kV ck1	SYCAMORE - SYCAMORE 2 69/230kV	285			1.03		1.01	**Pre Existing**

Catagory C and D

MVA2Trigger **>MVA2**
Area **22**

MVA2 pu Loading CaseName

Monitored Element	Contingency Description	MVA1	MVA2	10ha_n2_post	10ha_n2_pre	2010hs_n2_ v43post_sxcfe	2010hs_n2_ v43preSY_sxcfe	2010hs_n2_ v43xpreSY_sxcfe
LINE MESAHGTS 69kV-MISSION 69kV ck1	Mission 69kV N Bus	97.5	137	1.081		1.074	1.105	1.137
LINE PACFCBCH 69kV-OLD TOWN 69kV ck1	OLD TOWN TO OLD TOWN JCT	97.5	129			1.034		
LINE SYCAMORE 69kV-SCRIPPS 69kV ck1	MR-PQ 69KV + PQ-MRM 69KV	97.5	136.8	1.112				
		116	136.8			1.127	1.129	1.175
LINE DEL MAR 69kV-DELMARTP 69kV ck1	Del Mar 69kV E Bus	50.3	54.3	1.107	1.096	1.087	1.085	1.128
LINE LOSCOCHS 69kV-GRANITTP 69kV ck1	El Cajon 69kV S Bus	102	102	1.015	1.003	1.005	1.005	1.05
	Murray 69kV N Bus	102	102	1.072	1.117	1.056	1.072	1.106
LINE MURRAY 69kV-GARFIELD 69kV ck1	Los Coches 69kV E Bus	102.1	102.1		1.032			
	Murray 69kV N Bus	102.1	102.1	1.031	1.036	1.014	1.01	1.05
LINE ESCNDIDO 69kV-FELCTATP 69kV ck1	Escondido 69kV SE Bus	102.1	102.1	1.065	1.065			
	Escondido 69kV SW Bus	102.1	102.1	1.084	1.082			
	Felicita 69kV S Bus	102.1	102.1	1.031	1.023			
LINE EL CAJON 69kV-GRANITE 69kV ck1	Los Coches 69kV E Bus	97.5	136.8	1.058	1.046	1.041	1.039	1.074
LINE EL CAJON 69kV-LOSCOCHS 69kV ck1	Los Coches 69kV E Bus	55.1	55.1	1.211	1.259	1.201	1.262	1.244
	Murray 69kV N Bus	55.1	55.1	1.292	1.403	1.263	1.3	1.33
LINE MIGUEL 69kV-JAMACHA 69kV ck2	Miguel 69kV S Bus	136.8	143.4	1.069	1.153	1.063	1.064	1.115
LINE OTAY 69kV-OTAYLKTP 69kV ck1	Miguel 69kV S Bus	50.3	50.3	1.017	1.033			1.019
	Sweetwater 69kV Bus	50.3	50.3					1.002
TRAN SOUTHBAY 69kV-SOUTHBAY 138kV ck1	Miguel 69kV S Bus	140	143		1.199			
			164				1.149	1.098
	Sweetwater 69kV Bus	140	143		1.023			
	LC-SY + SY-TC 138KV	140	164				1.098	1.04
	PV-TC + LC-SY 138KV	140	164				1.007	
LINE PENSQTOS 69kV-MIRAMRTP 69kV ck1	Penasquitos 69kV SE Bus	97.5	102.1	1.107	1.071	1.059	1.038	1.045
	MR-PQ 69KV + PQ-MRM 69KV	97.5	102.1	1.273	1.149	1.221	1.203	1.212
LINE CLAIRMNT 69kV-CLARMTTP 69kV ck1	Mission 69kV N Bus	50.3	50.3					1.008
LINE EL CAJON 69kV-JAMACHA 69kV ck1	Murray 69kV N Bus	136.8	143	1.058		1.052	1.017	1.077
LINE GARFIELD 69kV-EL CAJON 69kV ck1	Murray 69kV N Bus	97	102.1	1.301	1.308	1.28	1.274	1.325
LINE SOUTHBAY 69kV-IMPRLBCH 69kV ck1	Otay 69kV Bus	55.1	55.1	1.395	1.205	1.371	1.386	1.407
LINE BERNARDO 69kV-R.CARMEL 69kV ck1	Poway 69kV Bus	68.2	72.5	1.456	1.432	1.445	1.443	1.466
	POM-SX 1 + 2 69KV	68.2	72.5	1.157	1.15	1.221	1.223	1.242
LINE DEL MAR 69kV-PENSQTOS 69kV ck1	Penasquitos 69kV NW Bus	50.3	50.3			1.085	1.084	
LINE SOUTHBAY 69kV-OTAY 69kV ck2	Southbay 69kV N Bus	100.6	100.6	1.201	1.037	1.178	1.195	1.214
LINE POMERADO 69kV-SYCAMORE 69kV ck2	Sycamore 69kV S Bus	97.5	136.8	1.009		1.17	1.174	1.144
LINE OCNSDETP 69kV-STUARTTP 69kV ck1	TA-SO 1 + 2 230KV	32.3	32.3	1.095	1.097			1.004
LINE STUARTTP 69kV-LASPULGS 69kV ck1	TA-SO 1 + 2 230KV	32.3	32.3	1.041	1.044			
LINE SANMATEO 138kV-LAGNA NL 138kV ck1	TA-TB + TA-PI 138KV	136.5	136.5	1.003	1.003	1.003	1.003	1.022
LINE TALEGA 138kV-MARGARTA 138kV ck1	TALEGA JCT to CAPISTRANO 138 ck 1	273.7	273.7	1.474	1.474	1.473	1.473	1.515
	TALEGA JCT to TALEGA 138 ck 1	273.7	273.7	1.474	1.474	1.473	1.473	1.513
LINE TALEGA 138kV-SANMATEO 138kV ck1	TA-TB + TA-PI 138KV	136.8	150	1.138	1.138	1.137	1.137	1.157
	PI-CP + TA-TB 138KV	136.8	150	1.024	1.024	1.023	1.023	1.041
LINE TALEGA 138kV-PICO 138kV ck1	TA-TB + LNL-SMO 138KV	204.1	204.1	1.101	1.101	1.1	1.1	1.114
TRAN ESCNDO50 138kV-ESCNDIDO 69kV ck2	BQ-CC-NCM-ES + CAN-SH-SA 138KV	63	63	1.19	1.196	1.19	1.19	1.184
	CAN-SA-SH + EA-CAN 138KV	63	63	1.191	1.197	1.191	1.192	1.185
LINE SYCAMORE 138kV-CHCARITA 138kV ck1	CH-SX-SN 138KV + SAN VCNT-EL 69KV	204.1	204.1			1.043	1.035	1.055
	PQ-NCW + EA-BQ-PQ 138KV	204.1	204.1	1.172		1.341	1.353	1.367
	MIGUEL 230 CORRIDOR West of SN	204.1	204.1			1.063	1.058	1.078
	PQ-EA 230KV + NCW-PQ 138KV	204.1	204.1				1.004	1.018
LINE CHCARITA 138kV-MDWLRKTP 138kV ck1	PQ-NCW + EA-BQ-PQ 138KV	204	204			1.031	1.044	1.048
LINE MARGARTA 138kV-TRABUCO 138kV ck1	TALEGA JCT to CAPISTRANO 138 ck 1	195.1	273.7	1.082	1.082	1.082	1.082	1.118
	TALEGA JCT to TALEGA 138 ck 1	195.1	273.7	1.082	1.082	1.082	1.082	1.116
LINE SYCAMORE 138kV-CARLTHTP 138kV ck1	CH-ES-NCM-SX	248	248			1.05		
LINE SAMPSON 69kV-DIVISION 69kV ck1	Miguel 69kV S Bus	170	170		1.075			
LINE WABASH 69kV-MAIN ST 69kV ck1	Miguel 69kV S Bus	100.6	100.6		1.045			

Appendix C – Transient Stability Plots

Transient Stability Results

Six-cycle fault with no element clearing – 6c_nec

1. The following are voltage and frequency plots for various bus voltages at South Bay. Illustrations show the response of a bus to a six-cycle, three phase fault applied at t = 1 sec and cleared at 1.1 seconds with a run to five seconds.

2. Visual review suggests that the response of the pre-project and post-project cases is comparable in quality of performance.

POST CASE RUNS

Six-cycle, three phase fault at South Bay 230 kV bus – no system elements removed post clearing

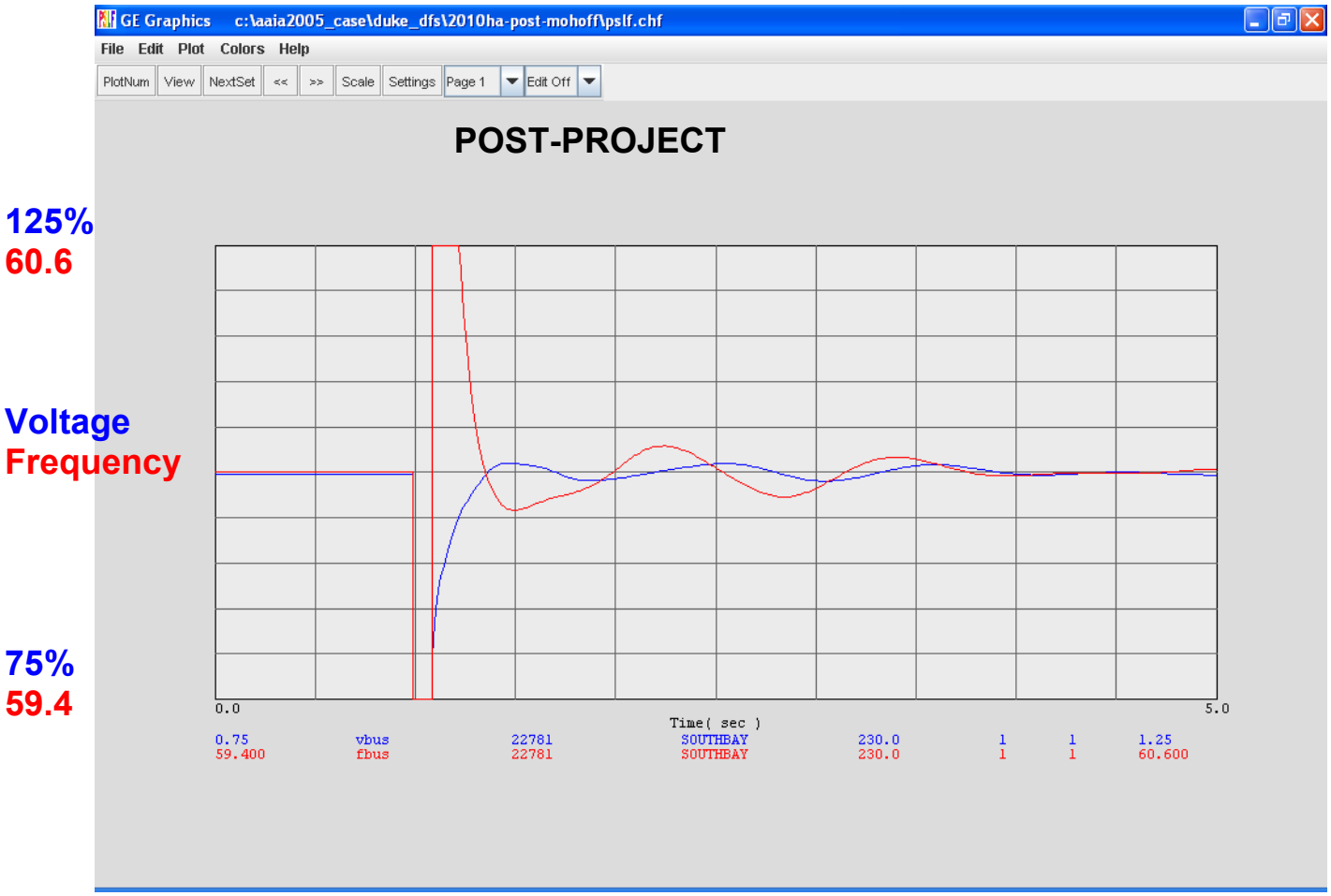

Six-cycle, three phase fault at South Bay 138 kV bus shown – no system element clearing post fault.

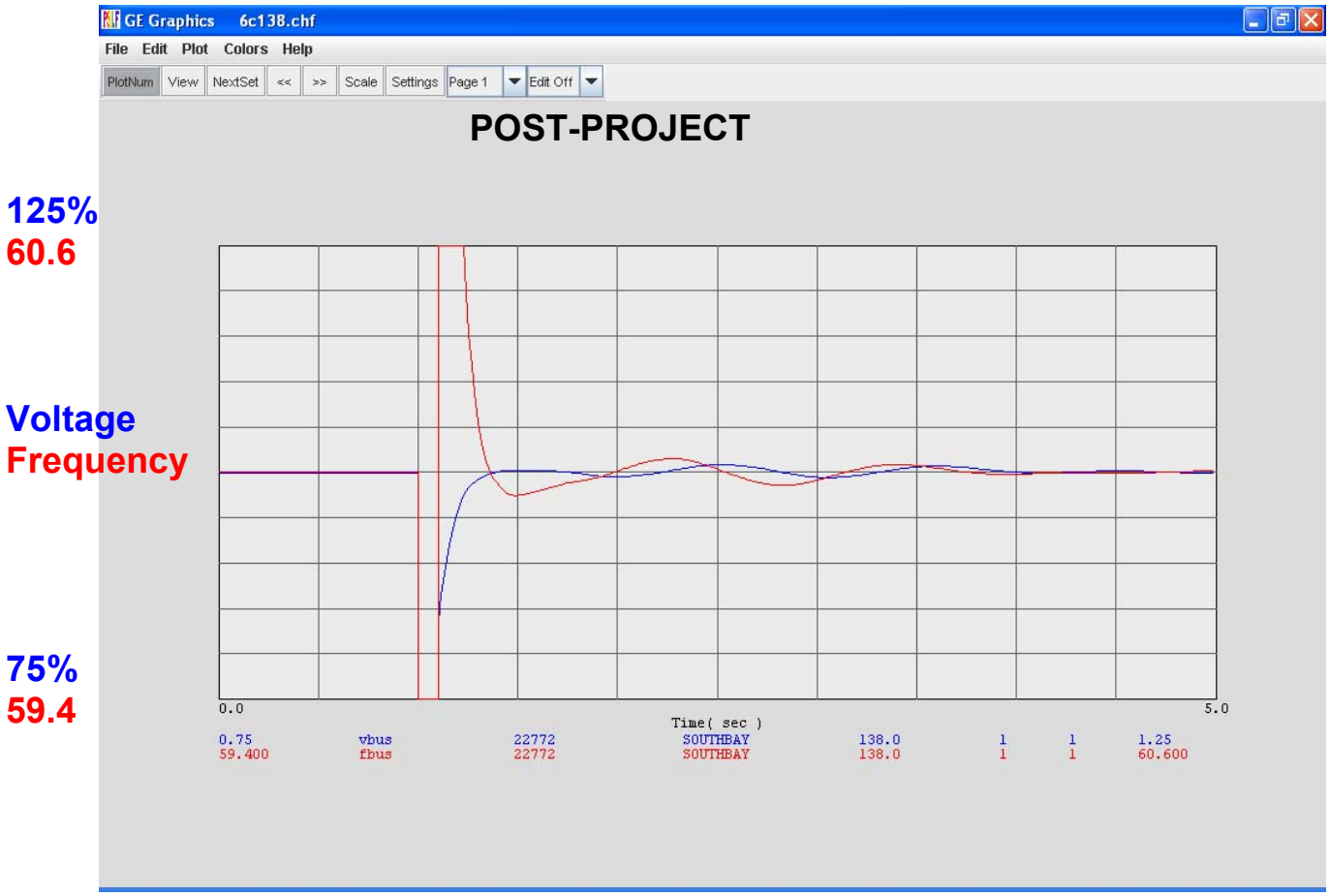

Six-cycle, three phase fault South Bay 69 kV bus – no element clearing post fault

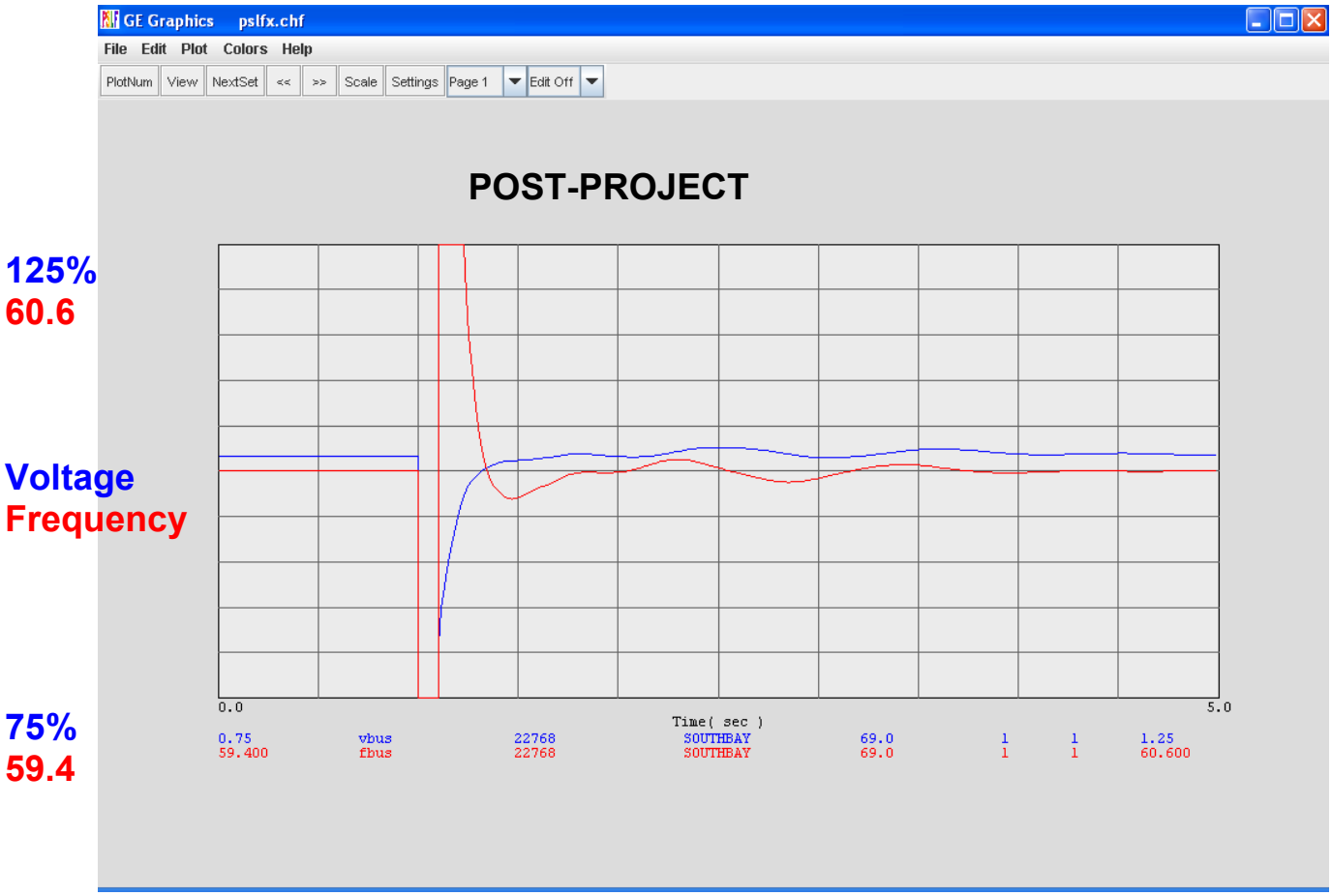

PRE CASE RUNS

Six-cycle, three-phase fault at South Bay 138 kV bus – no system elements removed post clearing

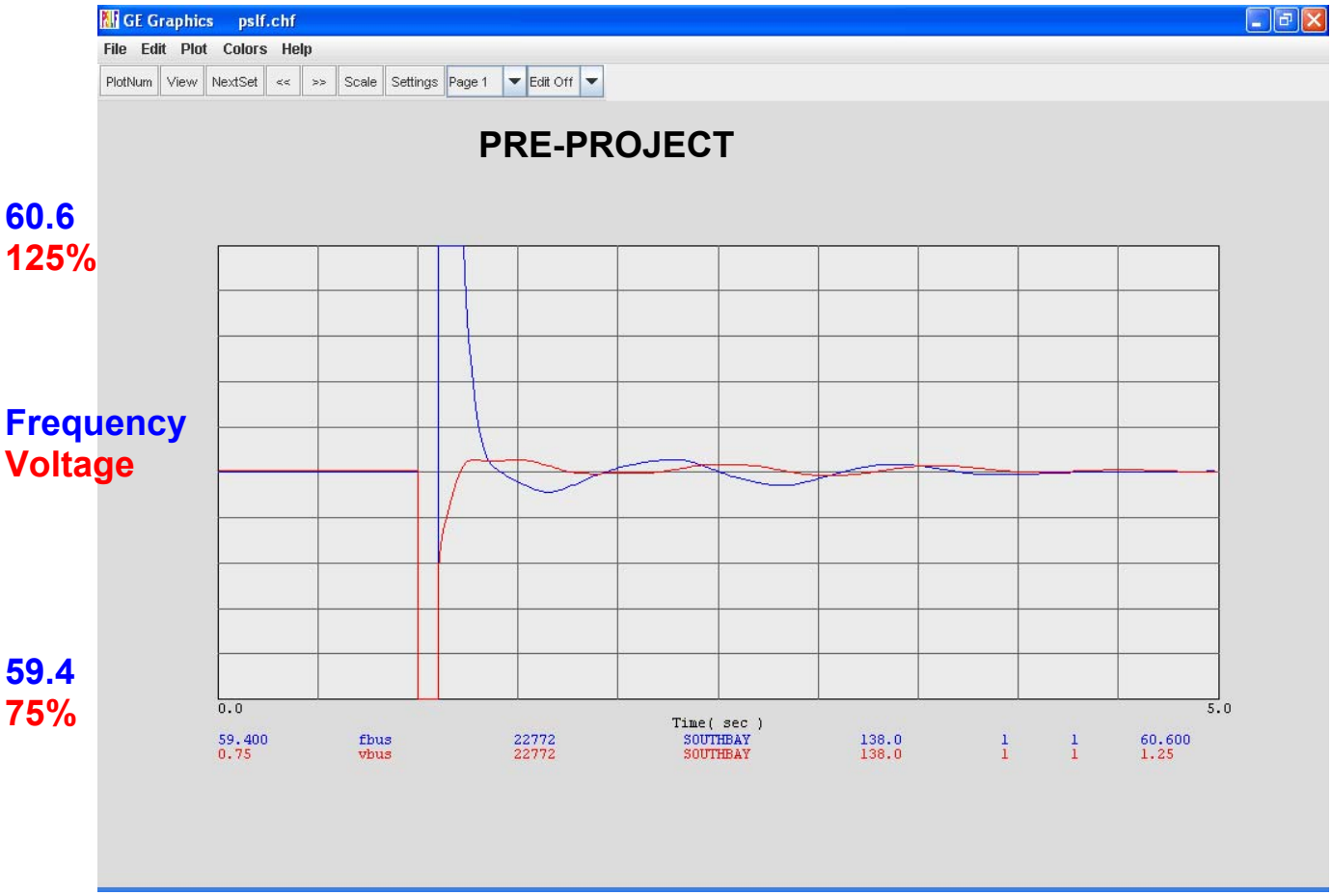

Six-cycle, three-phase fault at South Bay 69 kV bus – no system elements removed post clearing

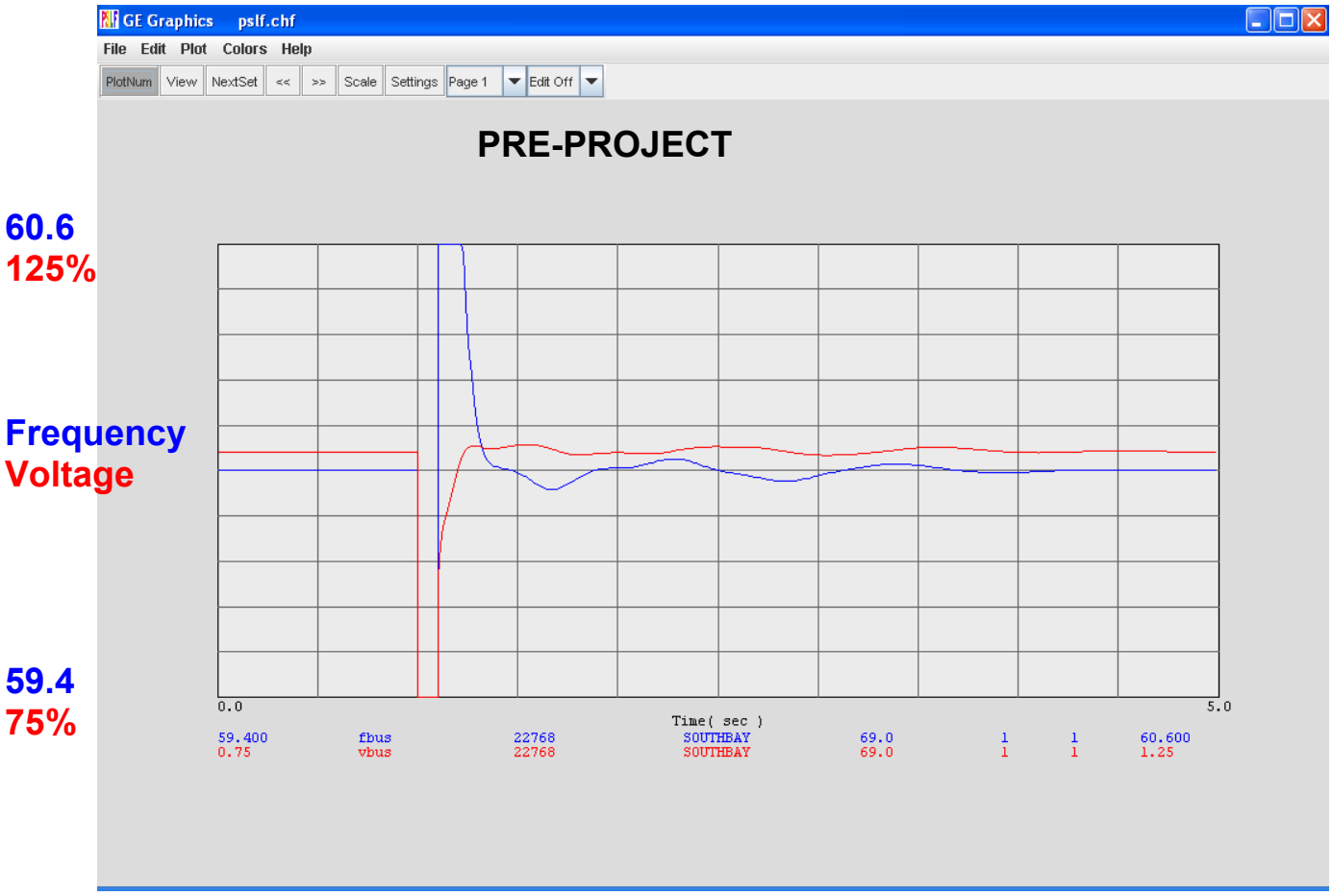

Sensitivities

POST: Six-cycle fault at South Bay 138 kV bus with IV Generation High – nec

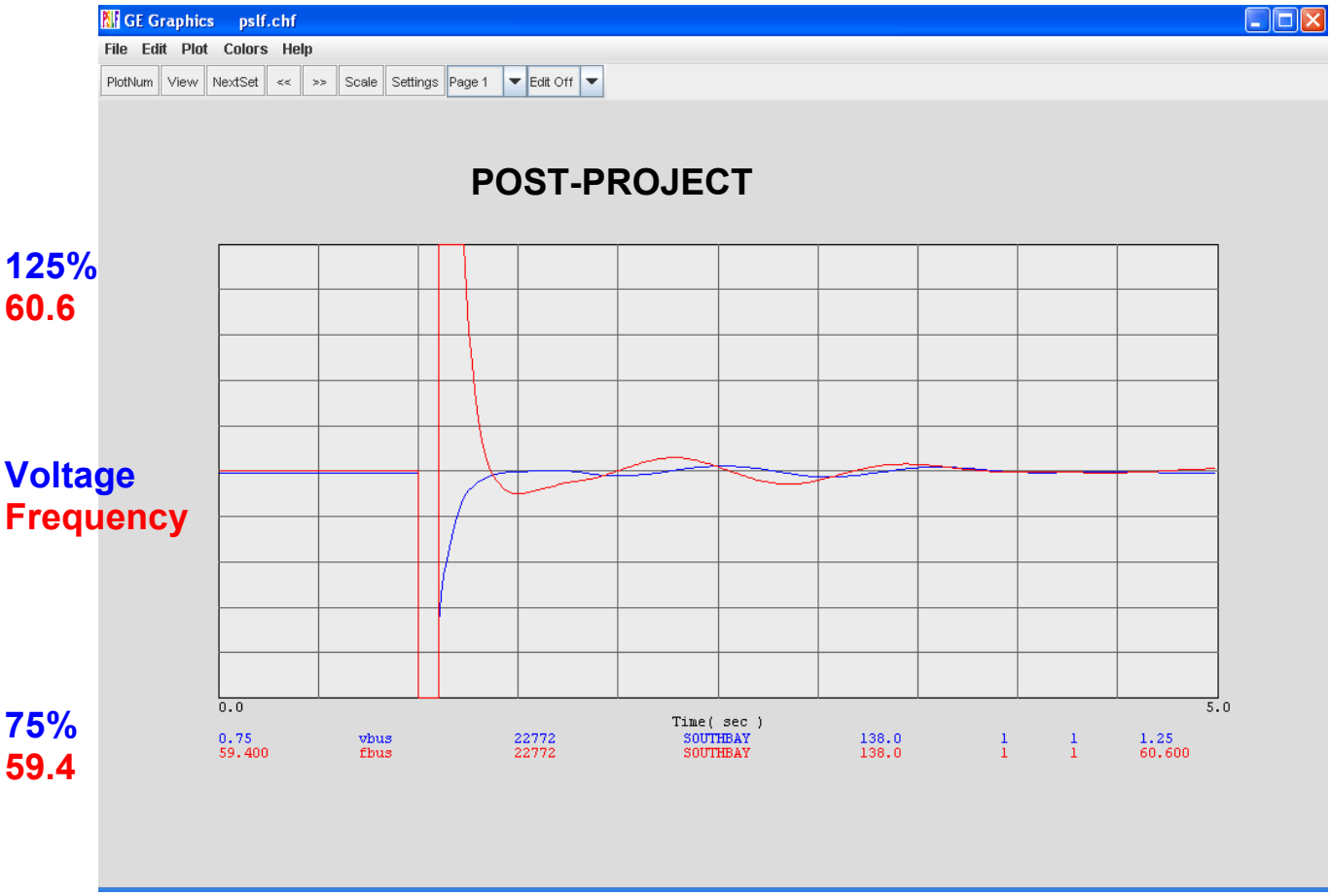

Worst Case Analysis
Post-Project 2010 Heavy Autumn
Sensitivity with Imperial Valley Generation at High Dispatch

POST PROJECT

Table wca [Last: 9 , Max: 60000] pslf.chf

Table

--I--	--P--	-MdName-	--BUS--	--NAME--	--KV--	...	...	...	ID	..	Initial	Min/Ma...	Delta	Percent_Diff	At_time	Duration
46528	22288	motorw	22288	FELICITA	69.0	...	..	...	..	..	0.98004	0.78...	0.19498	19.89532	-999.0000	0.0000
46336	22008	motorw	22008	ASH	69.0	...	..	...	..	..	0.99253	0.80...	0.19018	19.16143	-999.0000	0.0000
46496	22256	motorw	22256	ESCNDIDO	69.0	...	..	...	..	..	0.98609	0.79...	0.18633	18.89589	-999.0000	0.0000
13262	22724	gentpf	22724	SANMRCOS	69.0	...	..	...	..	..	0.99232	0.80...	0.18530	18.67360	-999.0000	0.0000
46672	22512	motorw	22512	MONSRATE	69.0	...	..	...	..	..	1.00625	0.82...	0.18109	17.99680	-999.0000	0.0000
46912	22870	motorw	22870	VALCNTR	69.0	...	..	...	..	..	1.00190	0.82...	0.17915	17.88051	-999.0000	0.0000
46504	22272	motorw	22272	ESCO	69.0	...	..	...	..	..	0.98518	0.80...	0.17840	18.10859	-999.0000	0.0000
46736	22624	motorw	22624	PALA	69.0	...	..	...	..	..	1.00309	0.82...	0.17553	17.49924	-999.0000	0.0000
13192	22332	gentpf	22332	GOALLINE	69.0	...	..	...	..	..	0.99782	0.82...	0.17387	17.42536	-999.0000	0.0000
46616	22404	motorw	22404	LILAC	69.0	...	..	...	..	..	0.99365	0.82...	0.17188	17.29783	-999.0000	0.0000

CurRow:

Worst Case Analysis
Post-Project 2010 Heavy Autumn
Sensitivity with Imperial Valley Generation at High Dispatch
Six Cycle Fault at the 138 kV South Bay
FELICITA 69 kV Bus with

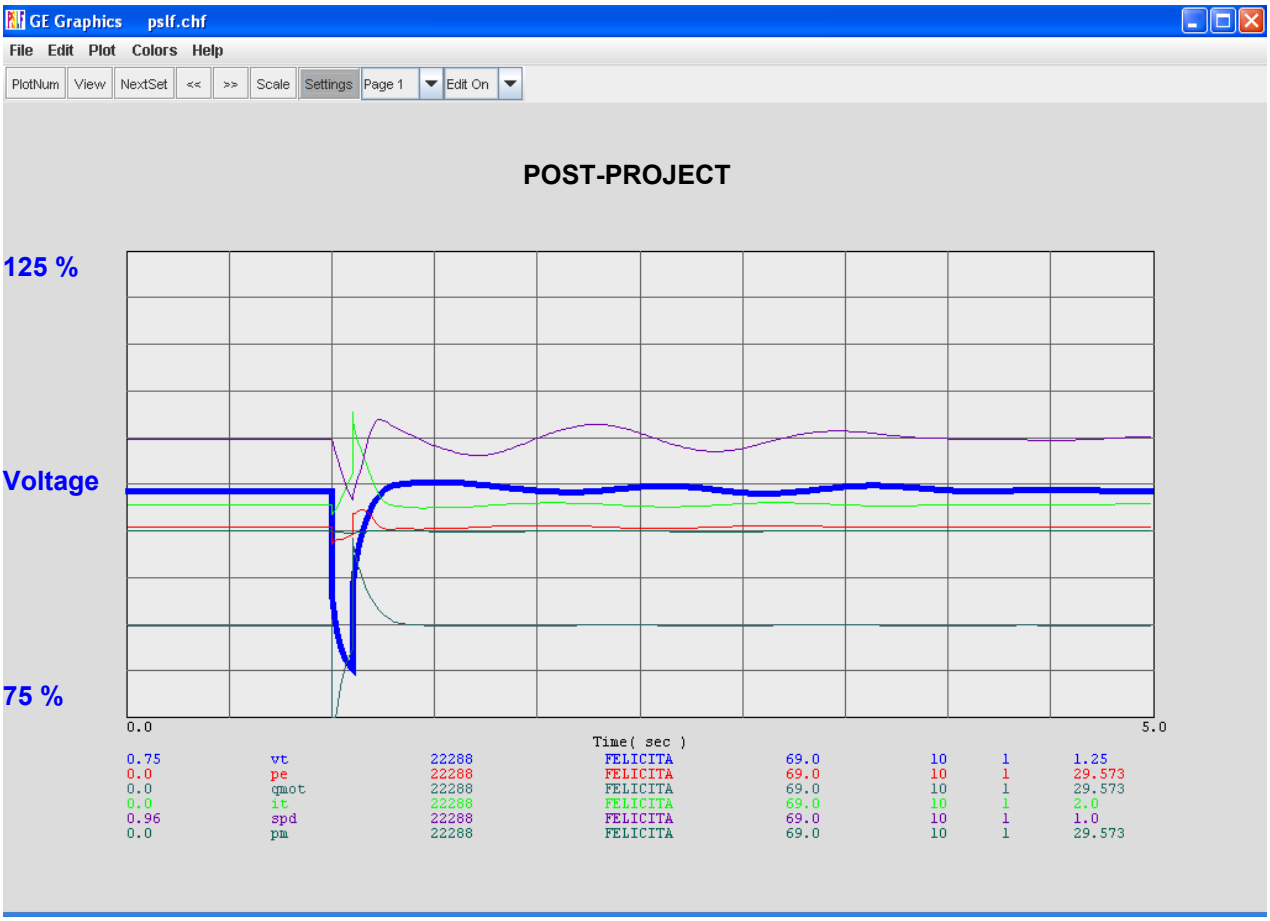

Post-Project 2010 Heavy Autumn
Sensitivity with Imperial Valley Generation at High Dispatch
Six-Cycle Fault at the 138 kV South Bay

Frequency at South Bay 138 kV bus

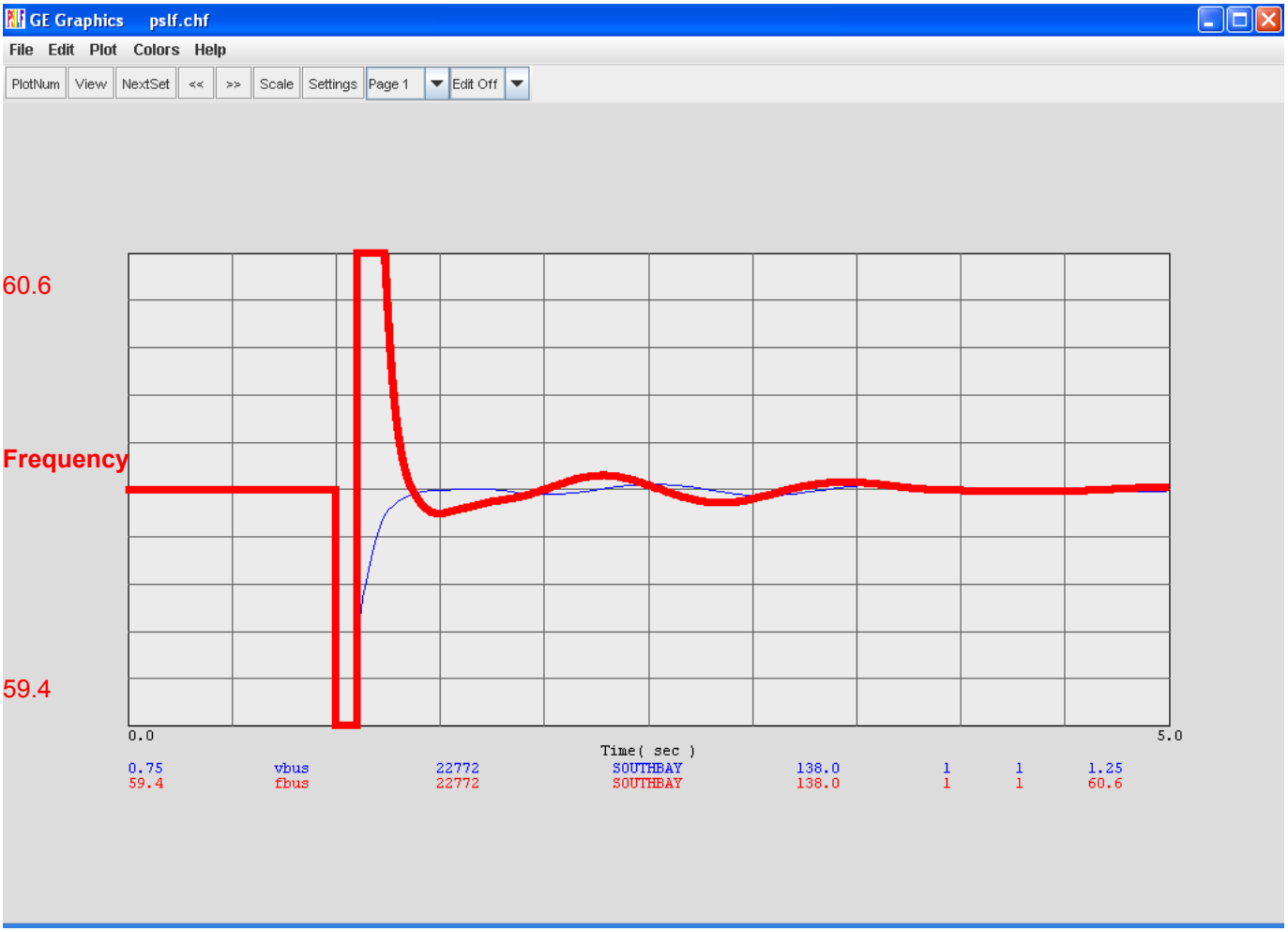

Post-Project 2010 Heavy Autumn
Sensitivity with Imperial Valley Generation at High Dispatch
Six-Cycle Fault at the 138 kV South Bay

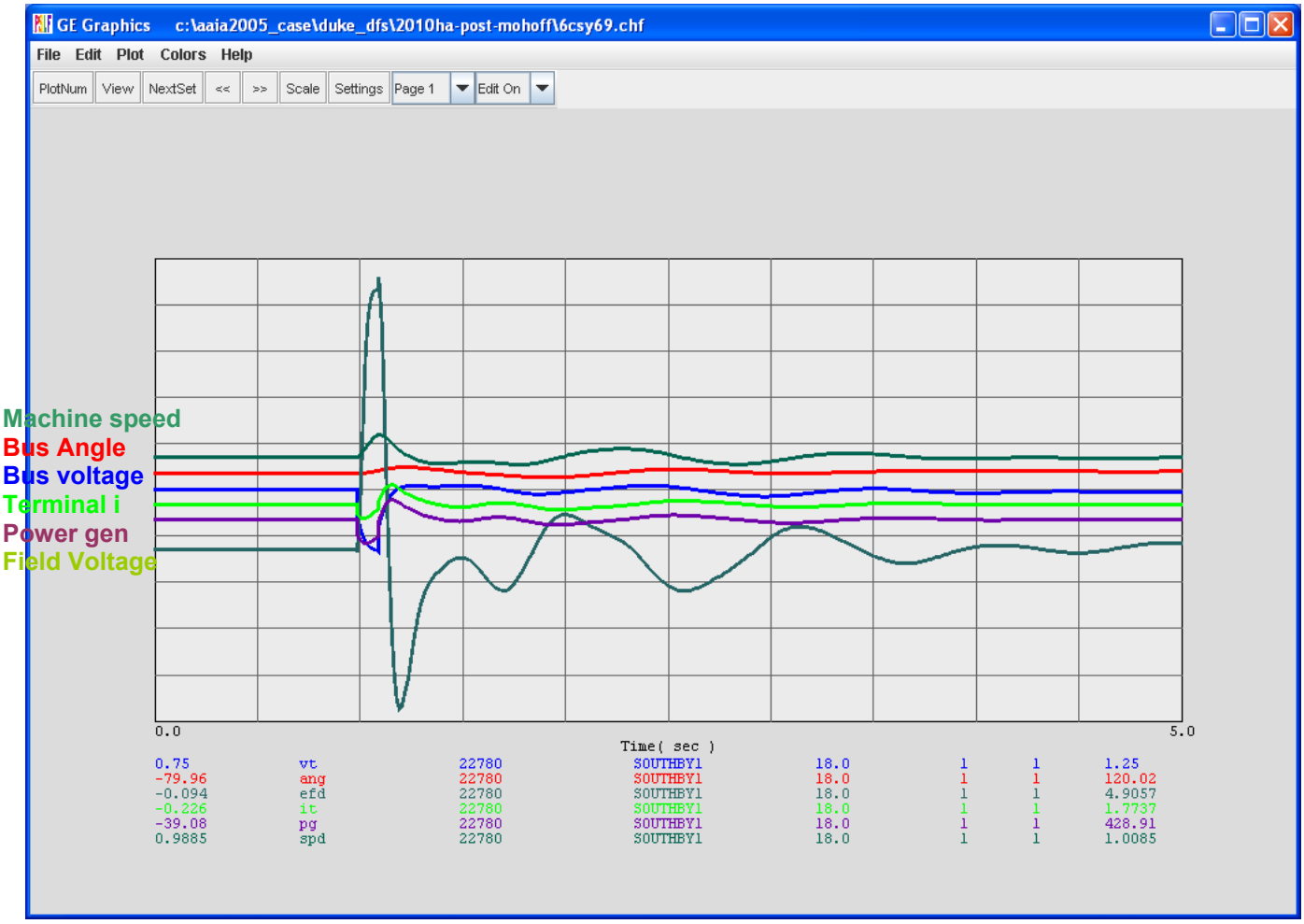

Appendix D – Post-Transient Voltage Stability

Duke/Southbay Repower VQ Study Pre-Project
SOUTHBAY69.0 VQ Curve Transfer: Base Point(1)

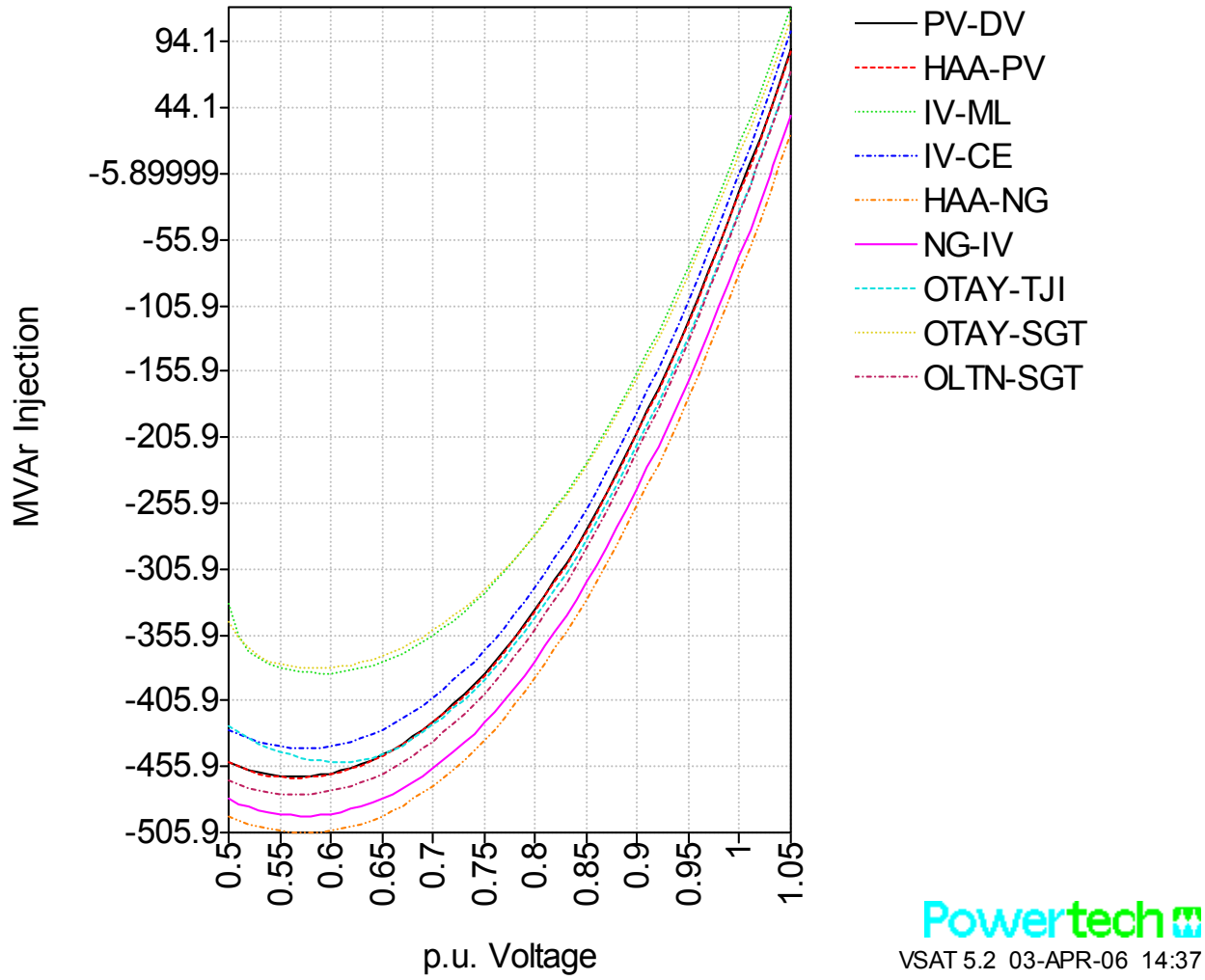

Powertech
VSAT 5.2 03-APR-06 14:37

Duke/Southbay Repower VQ Study Pre-Project
SOUTHBAY138. VQ Curve Transfer: Base Point(1)

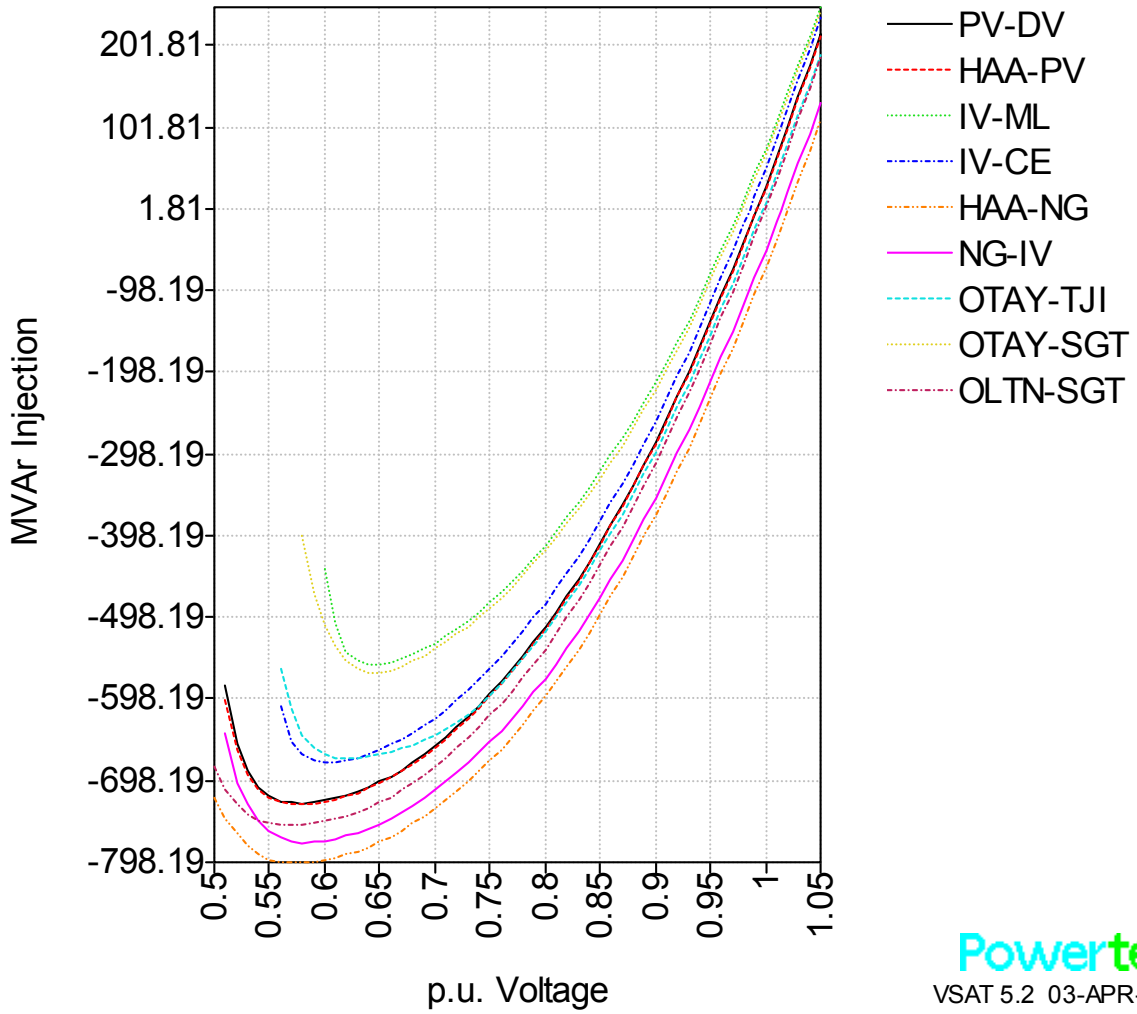

Powertech
VSAT 5.2 03-APR-06 14:37

Duke/Southbay Repower VQ Study Pre-Project
SILVERGT230. VQ Curve Transfer: Base Point(1)

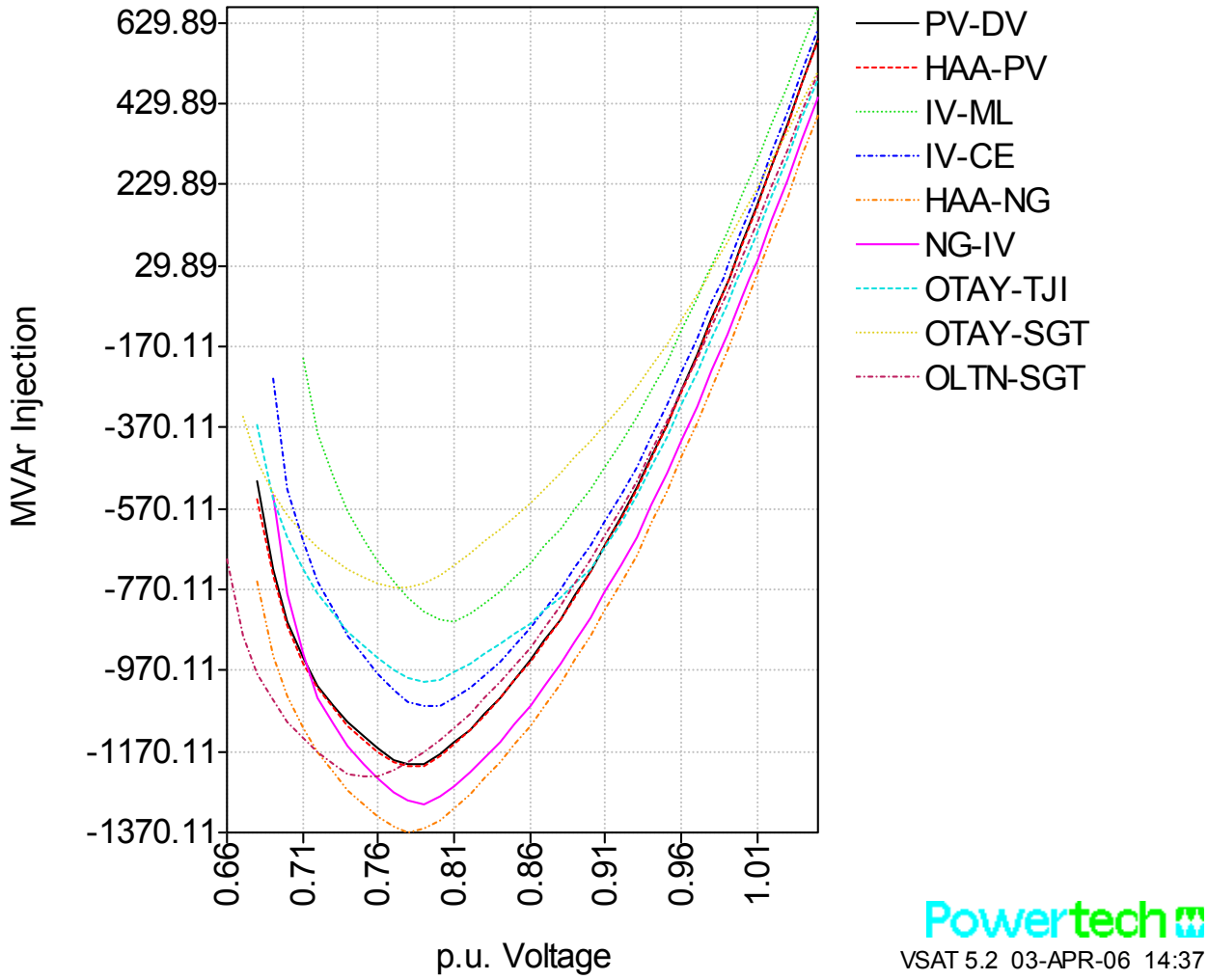

Duke/Southbay Repower VQ Study Post-Project
SOUTHBAY69.0 VQ Curve Transfer: Base Point(1)

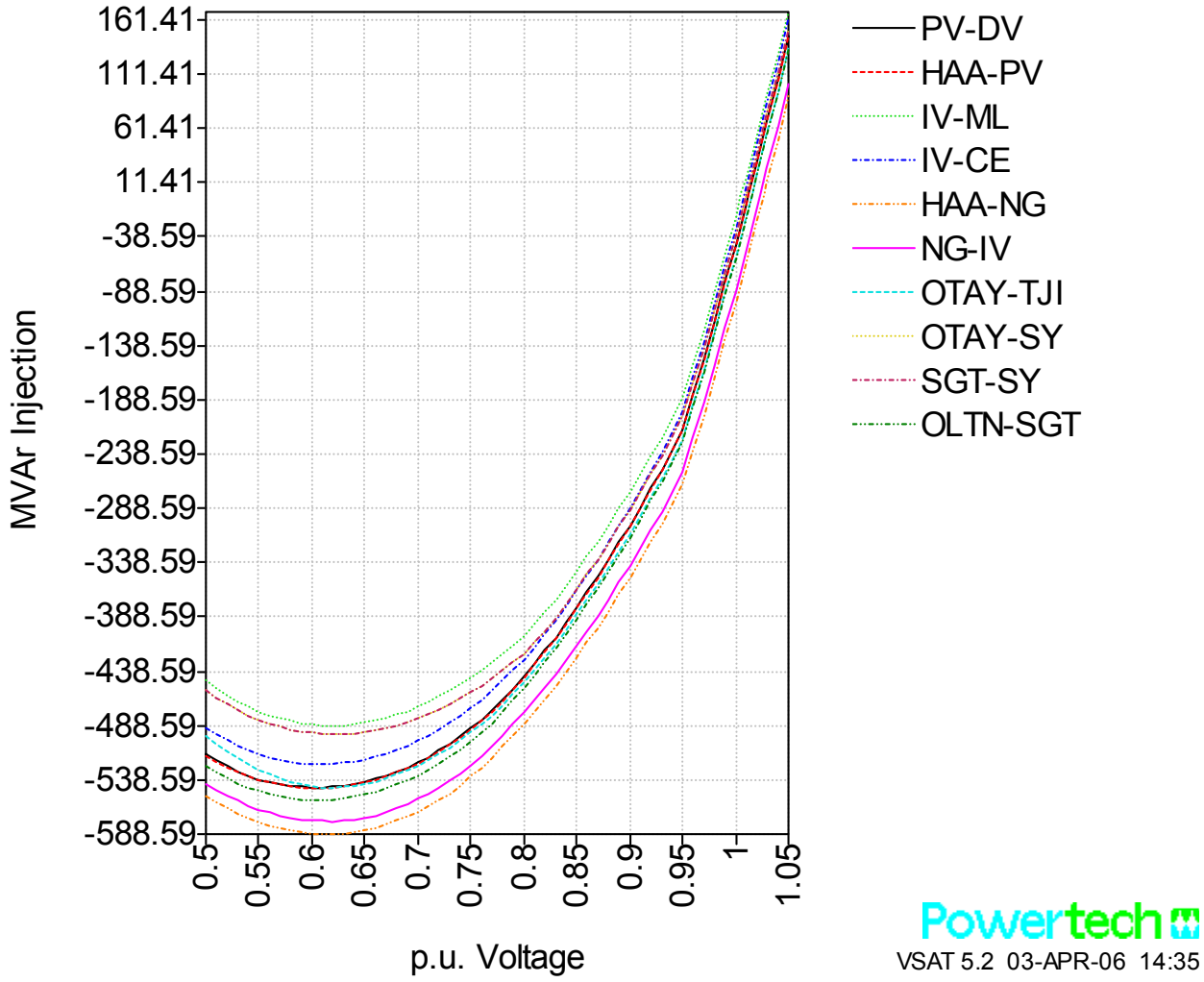

Powertech
VSAT 5.2 03-APR-06 14:35

Duke/Southbay Repower VQ Study Post-Project
SOUTHBAY138. VQ Curve Transfer: Base Point(1)

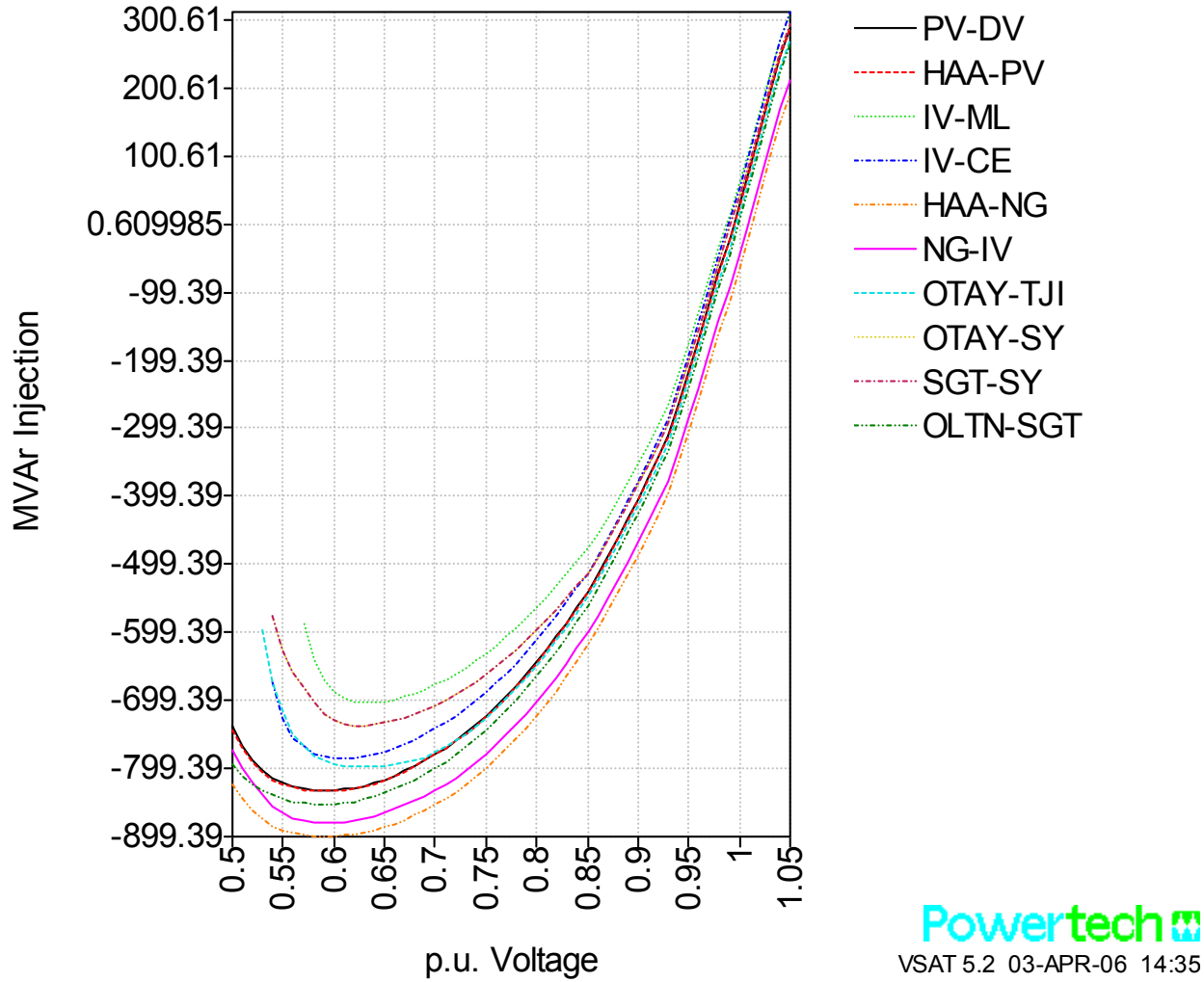

Powertech
VSAT 5.2 03-APR-06 14:35

Duke/Southbay Repower VQ Study Post-Project
SILVERGT230. VQ Curve Transfer: Base Point(1)

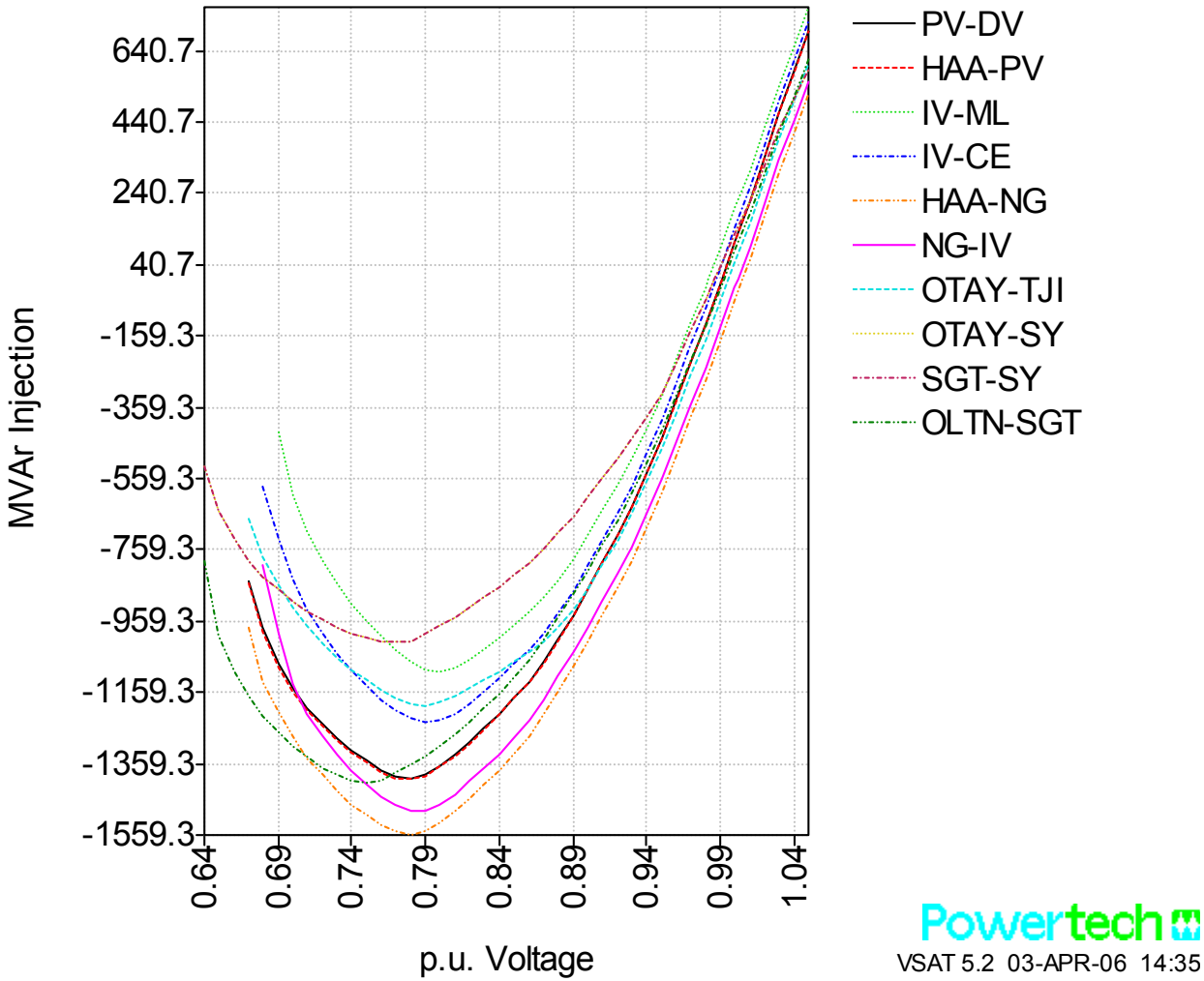

Powertech
VSAT 5.2 03-APR-06 14:35

Appendix E – Short Circuit Results

PRE CASE: South Bay 69 kV bus 3 phase fault

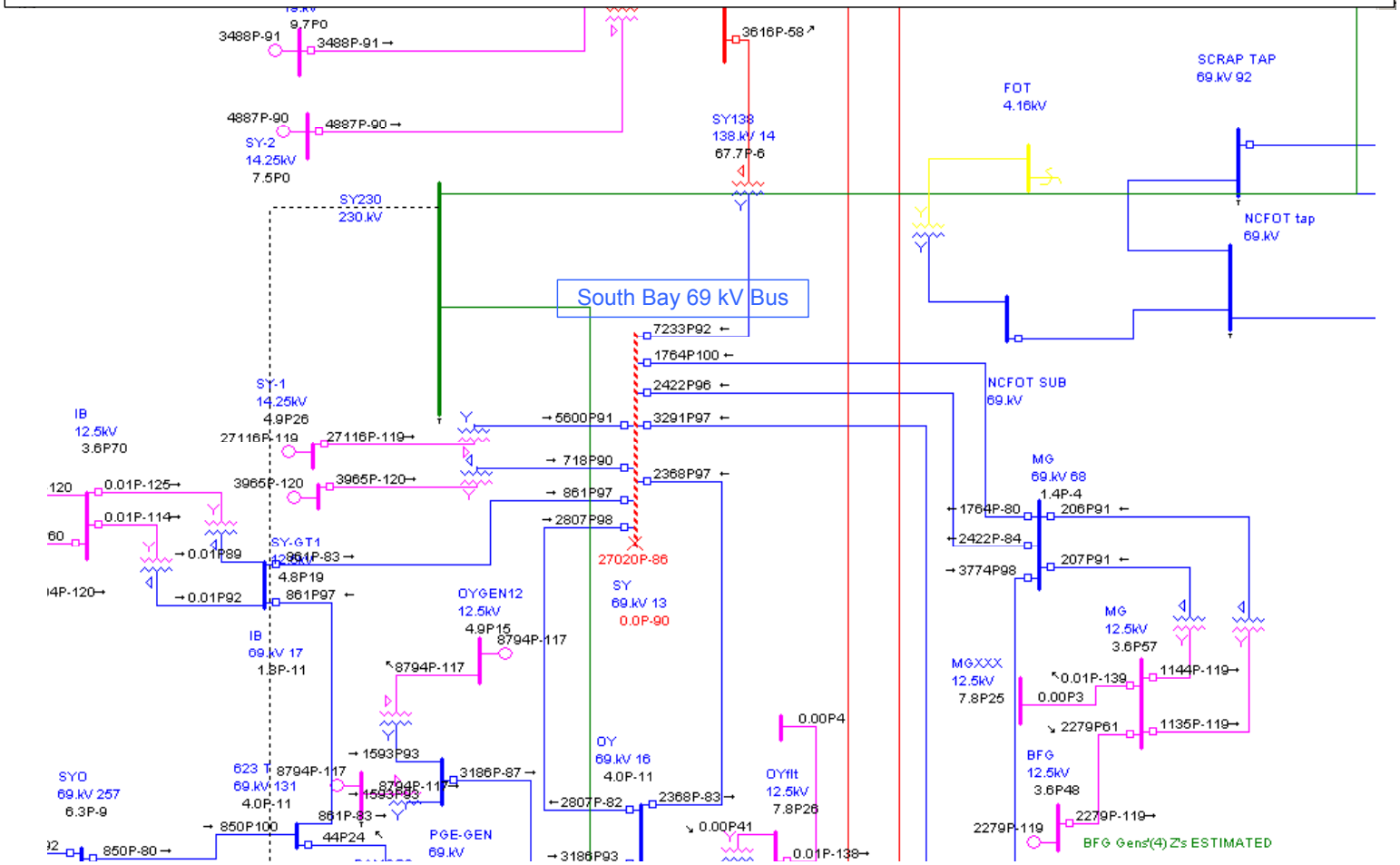

PRE CASE: South Bay 69 kV bus SLG fault

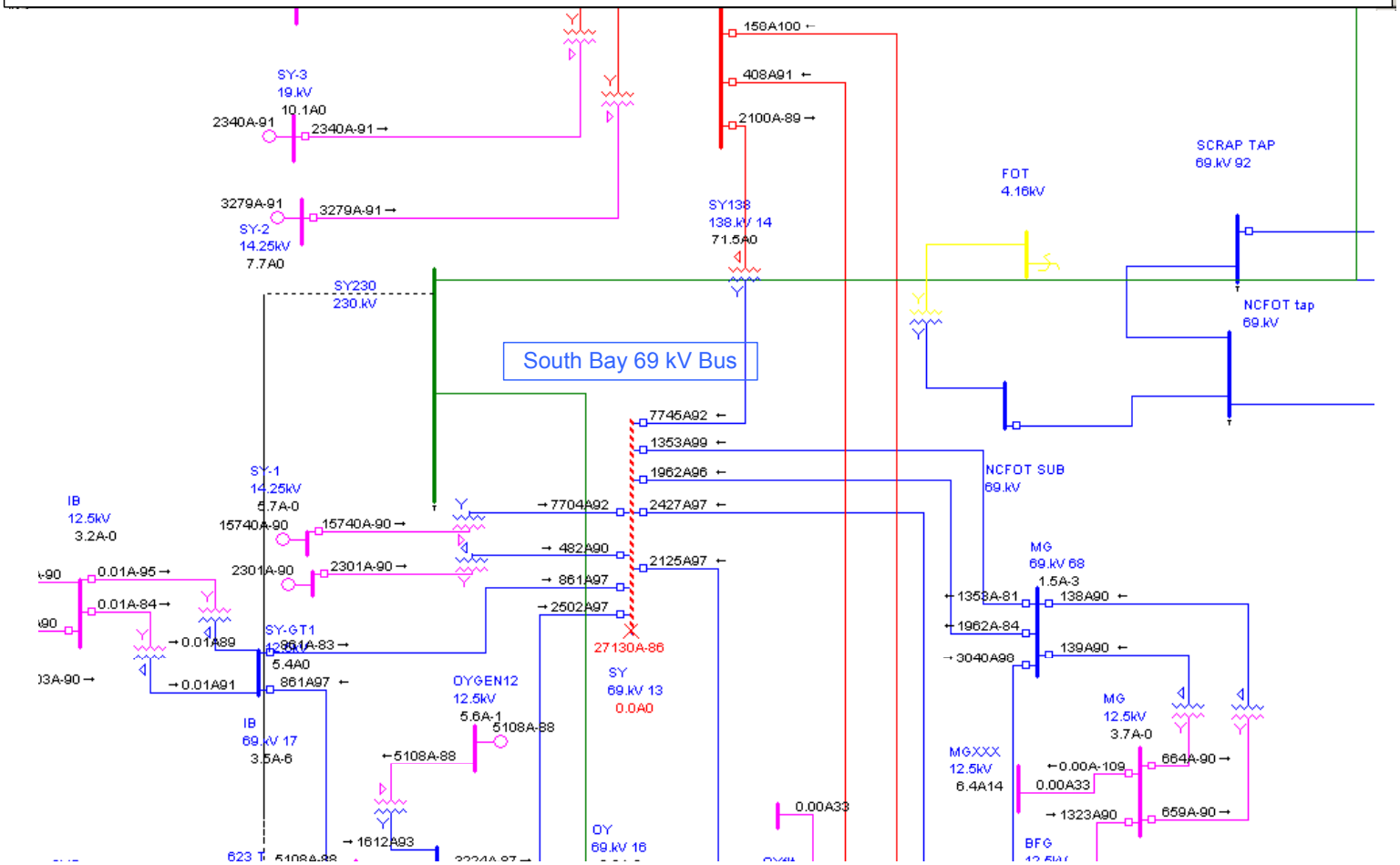

PRE CASE: South Bay 138 kV bus 3 phase fault

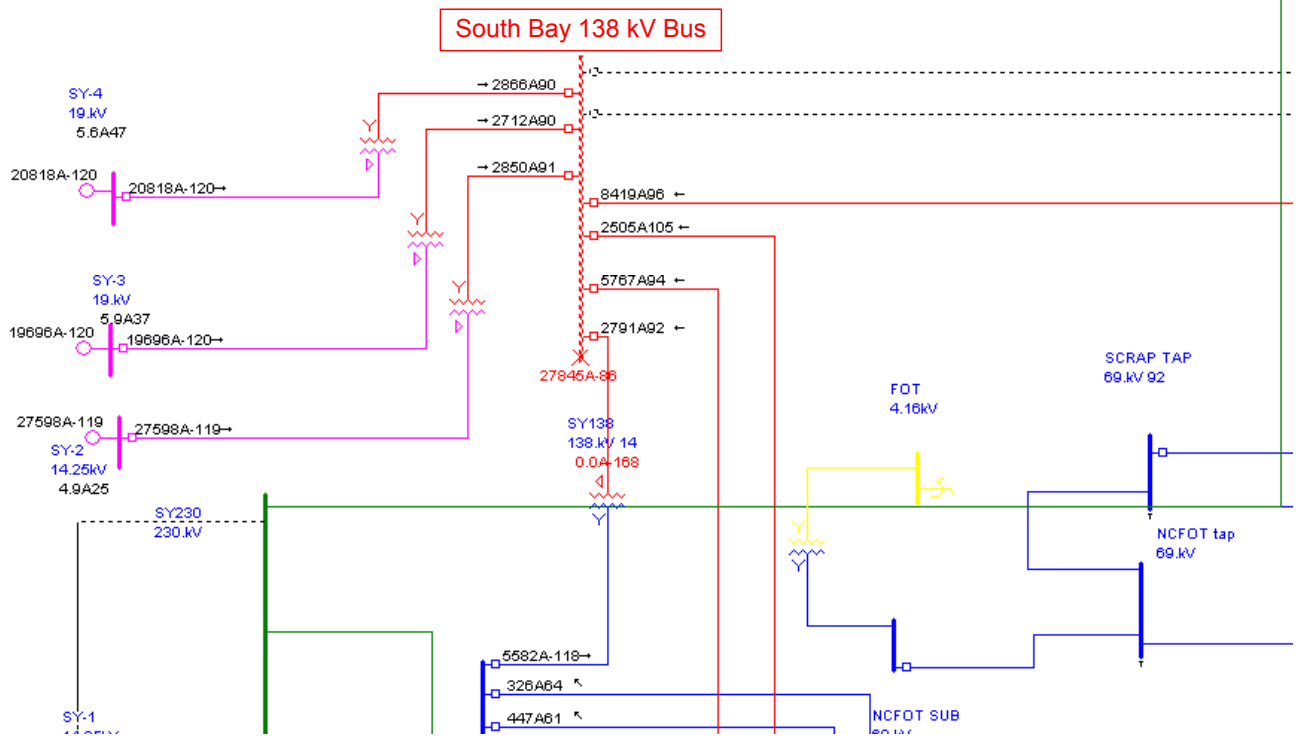

PRE-CASE: South Bay 138 kV bus SLG Fault

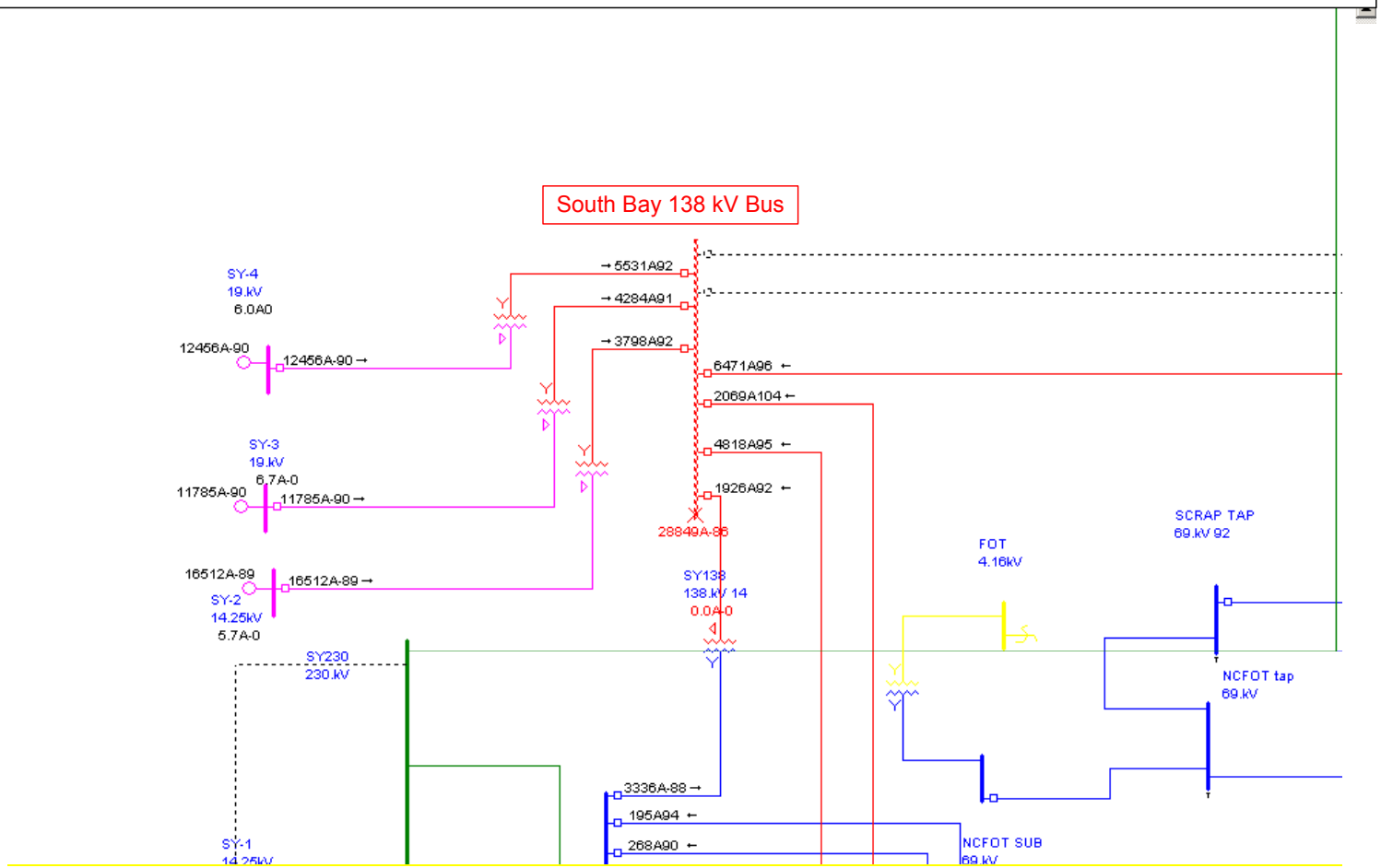

PRE CASE: South Bay 230 kV bus 3 phase fault

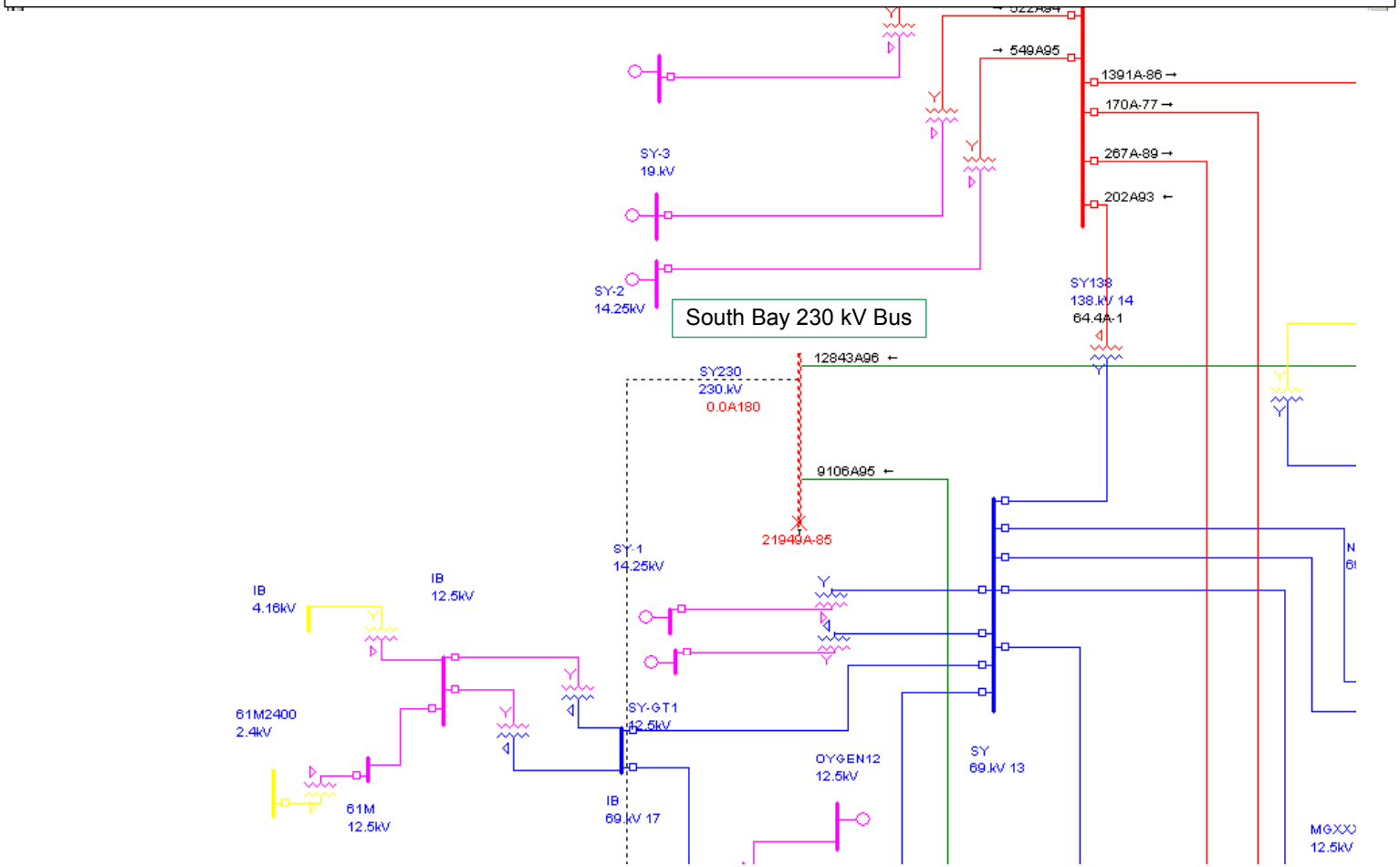

PRE CASE: South Bay 230 kV bus SLG fault

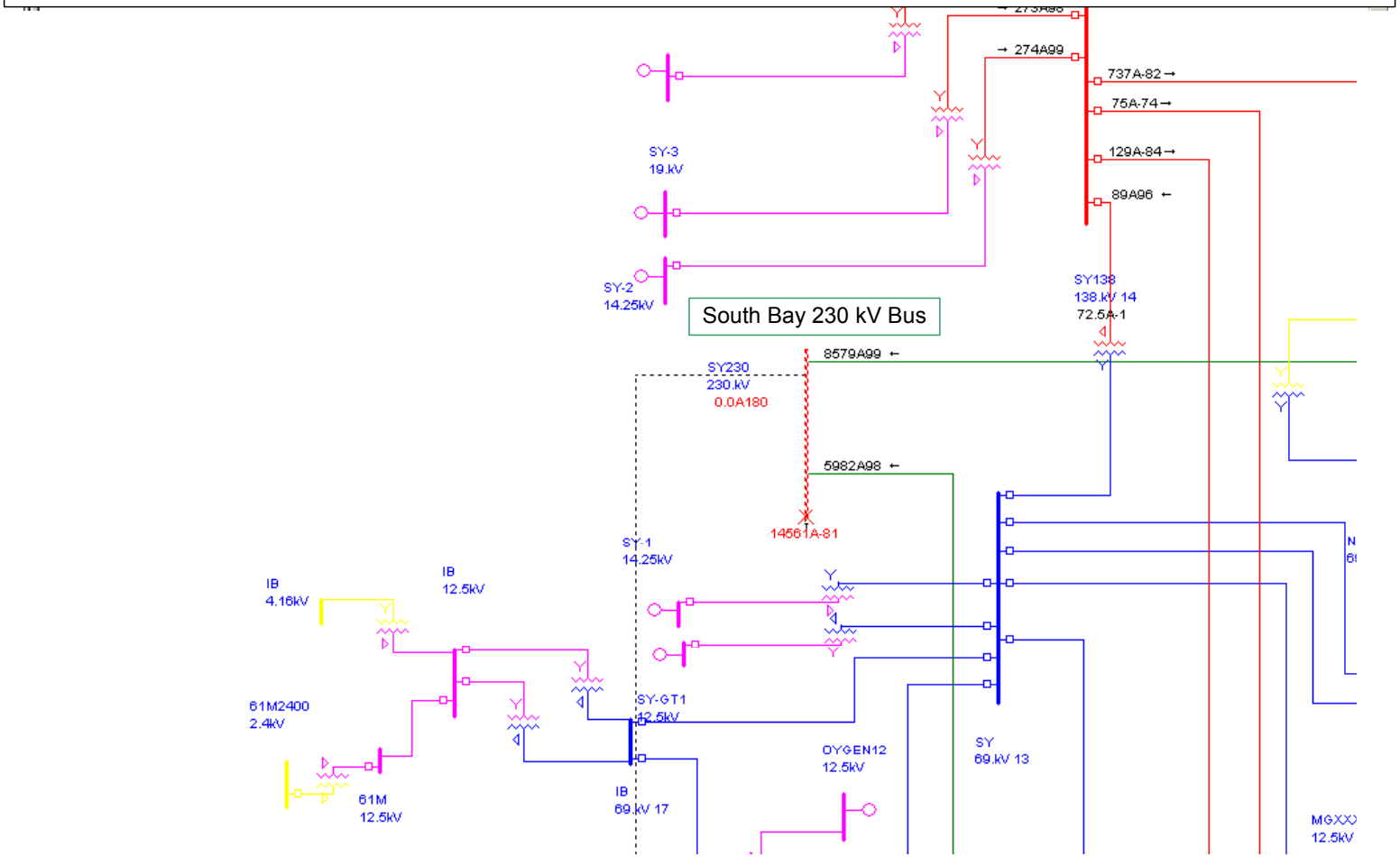

POST CASE: South Bay 69 kV bus SLG fault

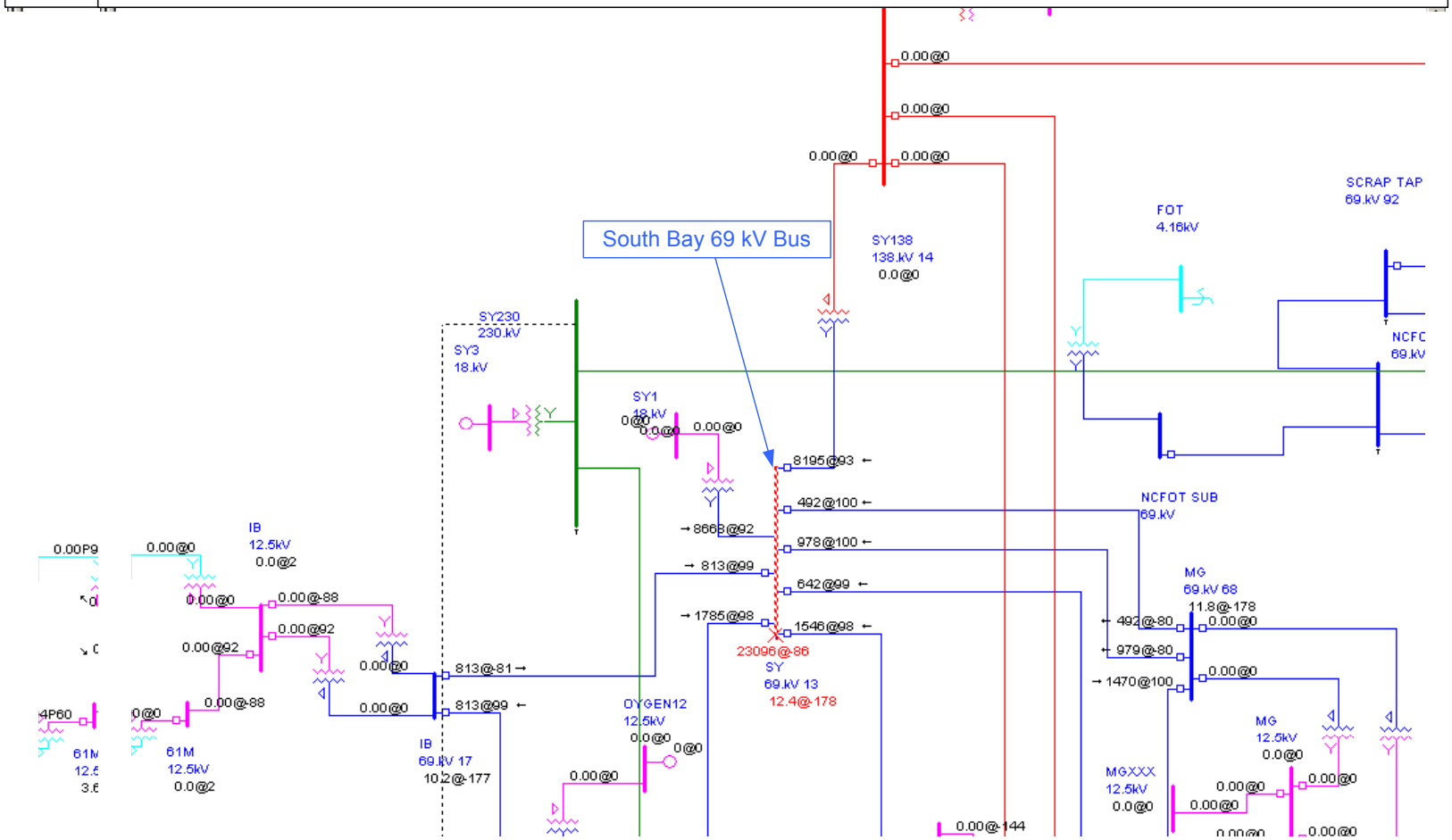

POST CASE: South Bay 138 kV bus 3 phase fault

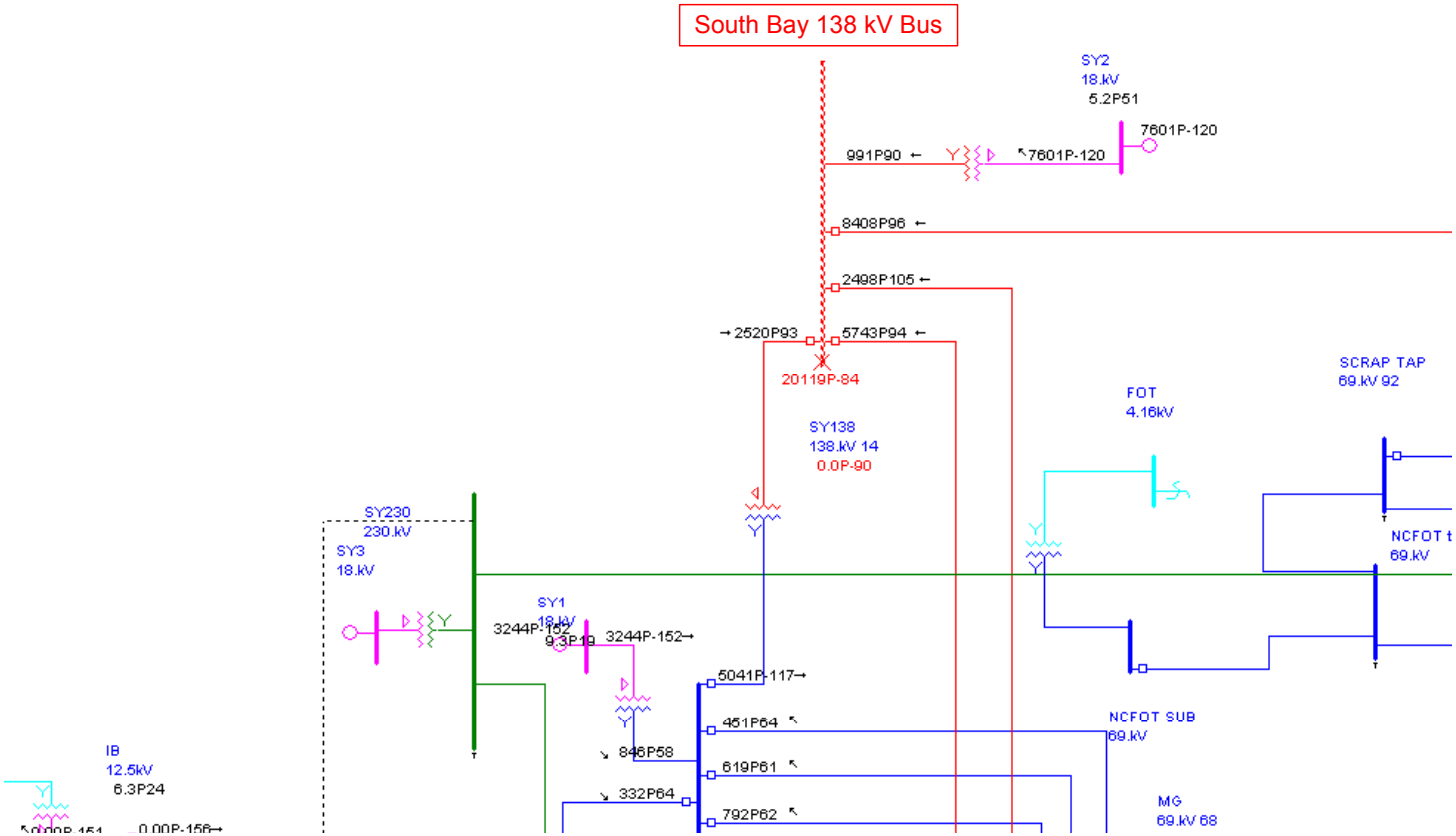

POST CASE: South Bay 138 kV bus SLG fault

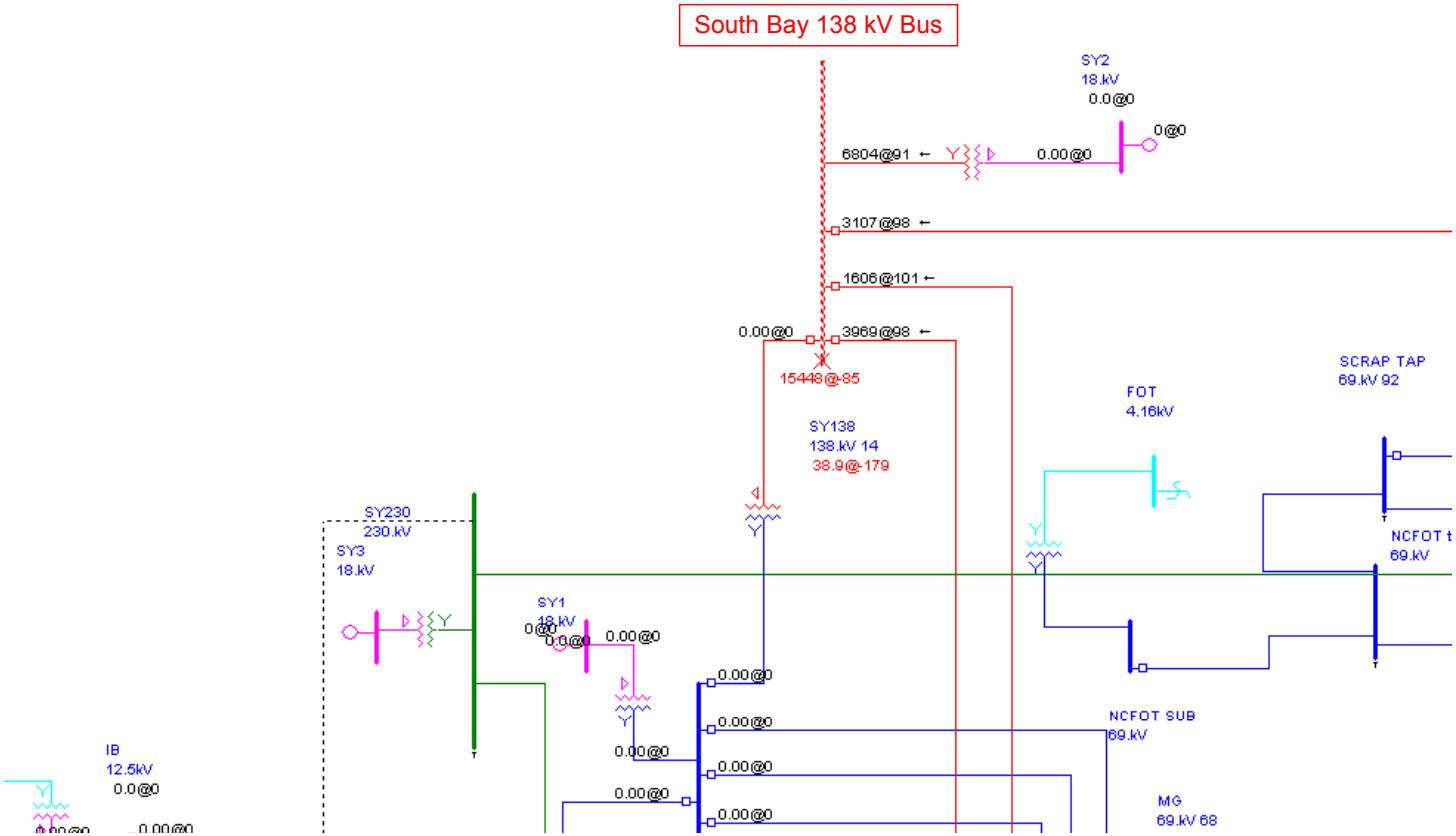

POST CASE: South Bay 230 kV bus 3 phase fault

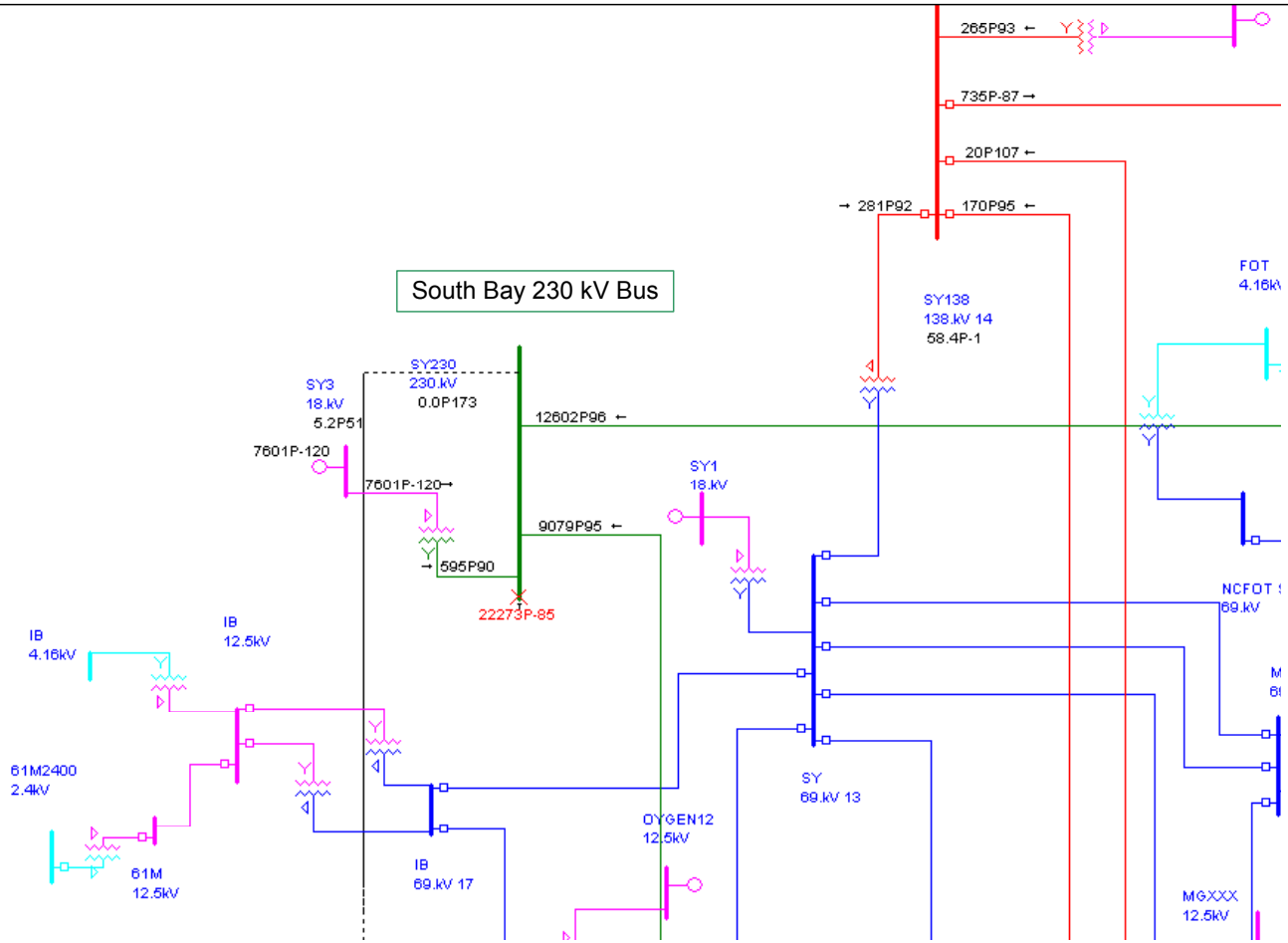

POST CASE: South Bay 230 kV bus SLG fault

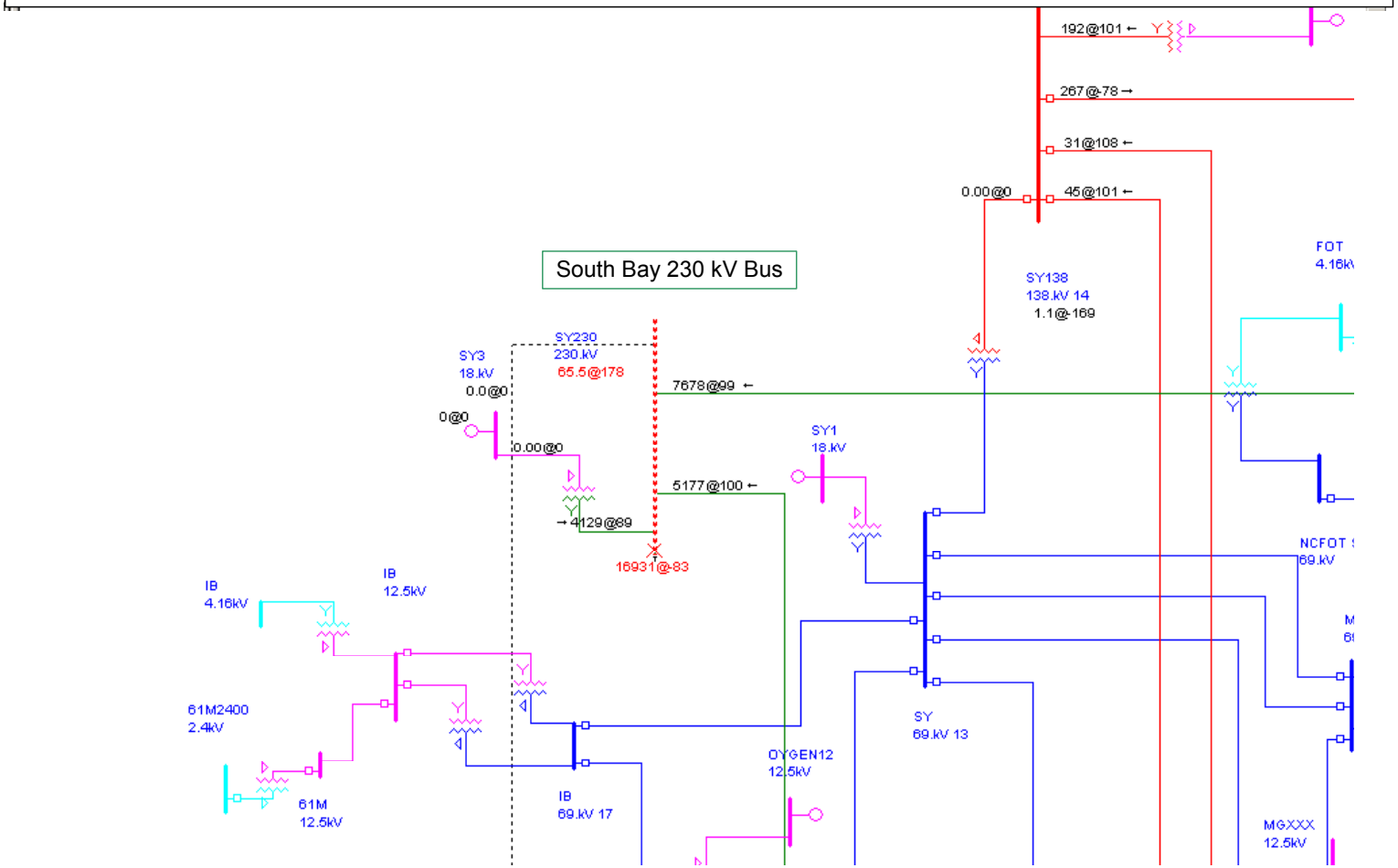

Appendix F – CAISO Controlled Grid Generation Queue

The California ISO Controlled Grid Generation Queue
as of: January 13, 2006

Request Status				Generating Facility		Maximum MWs		Location		Point of Interconnection				Study Availability			
Queue Position	Interconnection Request Receive Date	Queue Date	Application Status	Type	Fuel	Summer	Winter	County	State	Utility	Station or Transmision Line	Proposed On-line Date (as filed with IR)	Current On-line Date	Feasibility Study (IFS)	System Impact Study (SIS)	Facility Study (FAS)	Optional Study (OS)
1	9/30/1998	9/30/1998	Active	WT	W	16.5		Riverside	CA	SCE	Devers-Garnet 115 kV line (Tap)	3/1/1999	12/31/2005	NA	Complete	Complete	
2	8/10/1999	2/3/2000	Active	CC	NG	590		Contra Costa	CA	PGE	Contra Costa Power Plant 230 kV bus	2006	11/1/2006	N/A	Complete	Complete	
3	4/21/2000	6/14/2000	Active	CC	NG	850		Riverside	CA	SCE	Devers Substation 230 kV Bus	1/1/2004	5/1/2008	NA	Complete	Restudy	
4	8/8/2000	8/8/2000	Active	CC	NG	521	545	San Diego	CA	SDGE	Palomar 230 kV	6/1/2001	10/15/2005	NA	Complete	Complete	
5	8/9/2000	8/9/2000	Active	CC	NG	900		San Diego	CA	SDGE	Encina Power Plant Switchyard	6/30/2003	6/1/2008	NA	Complete	Complete	
6	8/23/2000	8/23/2000	Active	CC	NG	1156		San Joaquin	CA	PGE	Tesla Substation 230 kV Bus E	6/1/2008	6/2/2008	NA	Complete	In Progress	
7	8/16/2000	10/6/2000	Active	CC	NG	280		Los Angeles	CA	SCE	El Segundo 220 kV Bus	3/1/2003	1/1/2009	NA	Complete	Complete	
8	11/28/2000	11/28/2000	Active	CC	NG	750		San Diego	CA	SDGE	Sycamore Canyon Substation	6/1/2004	Unknown	NA	Complete	Delayed	
9	12/1/2000	12/1/2000	Active	CC	NG	1200		San Luis Obispo	CA	PGE	Morro Bay Substation	1/1/2008	1/1/2008	NA	Complete	Complete	
10	5/2/2001	5/2/2001	Active	CC	NG	620		Kings	CA	PGE	Gates Substation (Arco - Gates 230 kV line)	1/1/2009	7/1/2009	NA	Complete	Complete	
11	10/14/2002	10/23/2002	Active	WT	W	63		San Bernardino	CA	SCE	Mountain Pass Substation	12/1/2004	3/1/2006	NA	Complete	Complete	
12	12/16/2002	12/16/2002	Active	WT	W	150		Solano	CA	PGE	New Birds Lndng Sw Stn near Contra Costa PP Sub	10/31/2005	12/31/2005	NA	Complete	Complete	
13	1/3/2003	1/3/2003	Active	H	WTR	40		San Diego	CA	SDGE	Escondido	7/1/2007	1/1/2007	NA	Complete	Complete	
14	1/7/2003	1/7/2003	Active	CC	NG	65		San Diego	CA	SDGE	Miguel-Tijuana * (65 MWs -additional capacity, 615 total MW	12/31/2004	6/1/2007	NA	Complete	Complete	
15	12/31/2002	1/17/2003	Active	WT	W	50		San Bernardino	CA	SCE	Mountain Pass	9/1/2004	12/31/2007	NA	Complete	Complete	
16	3/11/2003	3/11/2003	Active	WT	W	120		Santa Barbara	CA	PGE	Cabrillo	6/1/2006	5/1/2006	NA	Complete	Complete	
17	3/18/2003	3/18/2003	Active	CC	NG	520		Riverside	CA	SCE	Devers-Palo Verde 500 kV line near Blythe	1/1/2006	6/1/2008	NA	In Progress		
18	4/15/2003	4/15/2003	Active	WT	W	200		Los Angeles	CA	SCE	Antelope	12/31/2005	12/12/2007	NA	Complete	Complete	
19	6/4/2003	6/18/2003	Complete	WT	W	46		San Diego	CA	SDGE	Crestwood	12/31/2005	10/1/2005	NA	Complete	Complete	
20	8/19/2003	9/4/2003	Active	WT	W	300		Kern	CA	SCE	Antelope	12/31/2006	12/31/2008	NA	Complete	Complete	
21	10/3/2003	10/23/2003	Active	WT	W	37.55		Byron	CA	PGE	Windmaster/Buena Vista Sub	7/1/2004	1/27/2006	NA	n/a	n/a	
22	11/18/2003	11/18/2003	Active	WT	W	38		Solano	CA	PGE	New Birds Lndng Sw Sta near Contra Costa PP Sub	6/30/2005	3/1/2007	NA	Complete	Complete	
23	11/17/2003	11/24/2003	Active	CC	NG	72		San Bernardino	CA	SCE	San Bernadino * 72 Additional MW	11/1/2004	10/1/2005	NA	Complete	Complete	
24	1/30/2004	1/30/2004	Active	WT	W	150		Solano	CA	PGE	High Winds/Contra Costa PP	12/31/2006	10/1/2006	NA	Complete	Complete	
25	2/5/2004	2/5/2004	Active	WT	W	117		San Diego	CA	SDGE	Crestwood	6/6/2005	6/1/2007	NA	In Progess		
26	2/12/2004	2/12/2004	Active	WT	W	36		San Diego	CA	SDGE	Crestwood	4/1/2006	3/1/2006	NA			
27	2/23/2004	2/23/2004	Active	CC	NG	650		San Diego	CA	SDGE	138/69 kV South Bay (650 MW CC)	1/1/2010	9/1/2009	NA	Complete	In Progress	
28	2/25/2004	2/25/2004	Active	CT	NG	145.1		San Francisco	CA	PGE	Potrero 115 kV Sub	12/1/2006	11/1/2006	NA	Complete	Complete	
29	3/8/2004	3/29/2004	Active	WT	W	201		Lake & Sonoma	CA	PGE	Collector Substation at Geysers #17 & Fulton 230 kV line	12/1/2006	10/16/2006	NA	Complete	Complete	
30	4/26/2004	4/26/2004	Active	CT	NG	48.7		San Francisco	CA	PGE	SF Airport Substation	6/1/2006	5/1/2006	NA	Complete	Complete	
31	4/12/2004	5/11/2004	Active	WT	W	201		Kern	CA	SCE	Monolith Substation	12/31/2007	12/31/2009	NA	Complete	In Progress	
32	5/12/2004	5/24/2004	Active	WT	W	201		San Diego	CA	SDGE	Boulevard - Crestwood 69-kV transmission line	9/1/2007	7/1/2007	NA	In Progess		
33	7/9/2004	7/12/2004	Active	ST	G	10		Curchill	NV	SCE	Bishop Control Sub	7/14/1988	5/31/2006	NA	Complete	Complete	
34	7/19/2004	7/19/2004	Active	WT	W	300		Kern	CA	SCE	Monolith Substation	7/1/2007	12/31/2009	NA	Complete	In Progress	
35	10/25/2004	10/25/2004	Active	CT	NG	99.9		Fresno	CA	PGE	115 KV Panoche Sub	5/31/2006	4/30/2006	NA	Complete		
36	11/1/2004	11/1/2004	Active	CT	NG	99.9		Stanislaus	CA	PGE	115 kV Tesla - Stockton Cogen Trans. Line.	5/31/2006	4/30/2006	NA	Complete		
37	11/8/2004	11/8/2004	Active	CT	NG	96.9		San Joaquin	CA	PGE	Tesla Substation	1/1/2007	10/31/2006	NA	Complete		
38	10/19/2004	11/11/2004	Active	IC	NG	146.4		Humboldt	CA	PGE	Humboldt Power Plant Substation	8/1/2008	7/1/2008	NA	Being restudied		
39	11/11/2004	11/11/2004	Active	WT	W	200		Solano	CA	PGE	New Birds Lndng Sw Sta near Contra Costa PP Sub	12/31/2008	8/1/2008	NA	Complete		
40	10/19/2004	11/11/2004	Active	IC	NG	118		Alameda	CA	PGE	Eastshore Substation	5/1/2007	3/1/2007	NA	Complete		
41	11/9/2004	11/18/2004	Active	CT	NG	158.8		Kern	CA	SCE	Pastoria Substation	7/31/2006	7/31/2006	NA	Complete	In Progress	
42	11/24/2004	11/26/2004	Active	CT	NG	300		Fresno	CA	PGE	McCall Substation	5/31/2007	4/30/2007	NA	Being restudied		
43	11/29/2004	11/29/2004	Active	IC	NG	168.7		San Joaquin	CA	PGE	Tesla-Bellota 230 kV line	1/1/2008	10/1/2007	NA	Complete		
44	11/29/2004	11/29/2004	Active	IC	NG	126.5		Madera	CA	PGE	Borden Substation 230 kV Bus	1/1/2008	10/1/2007	NA	Complete		
45	12/1/2004	12/1/2004	Active	CT	NG	361		Alameda	CA	PGE	Eastshore substation	7/31/2007	4/30/2007	NA	Complete		
46	12/1/2004	12/1/2004	Active	CT	NG	531		Contra Costa	CA	PGE	Tesla-Tracy #1 230 kV Line - Tracy Sub	7/31/2006	4/30/2008	NA	Complete		
47	12/1/2004	12/1/2004	Active	CT	NG	200.6		Fresno	CA	PGE	Herndon - Kearney 230 kV line	6/30/2008	1/1/2008	NA	Complete		
48	12/1/2004	12/1/2004	Active	CC	NG	590		Contra Costa	CA	PGE	Contra Costa Power Plant 230 kV Substation	1/1/2008	10/1/2008	NA	Complete		
49	12/14/2004	12/14/2004	Active	WT	W	100.5		Riverside	CA	SCE	Devers Substation	12/1/2006	11/1/2006	NA	Complete	In Progress	
50	12/21/2004	12/21/2004	Active	CC	NG	810		Riverside	CA	SCE	SCE Valley Substation	5/31/2008	12/31/2006	NA	Complete		
51	12/20/2004	12/21/2004	Active	IC	NG	0.55		Fresno	CA	PGE	70 kV Kerman-Helm transmission line	4/30/2005	On Hold	NA	n/a	n/a	
52	12/1/2004	12/21/2004	Active	CT	NG	401		Fresno	CA	PGE	Panoche Sub Station	6/30/2008	1/1/2008	NA	Complete		
53	12/1/2004	12/22/2004	Active	CT	NG	116.8		Placer	CA	PGE	Pleasant Grove Sub Station	6/1/2008	3/1/2008	NA	Complete		
54	11/11/2004	1/12/2005	Active	CT	NG	104		Fresno	CA	PGE	Panoche Substation	6/1/2008	5/31/2008	NA	Complete		
55	12/1/2004	1/13/2005	Active	CC	NG	791		Fresno	CA	PGE	Helm substation	7/31/2008	4/30/2008	NA			

Notes:

This Queue posting reflects the requirements of the FERC Order 2003 for Large Generator Interconnection Procedures (LGIP).
Generator Interconnection Requests or applications Completed or Withdrawn prior to this posting are not shown.
Future withdrawals will be indicated in the Application Status as Withdrawn and their Queue position will be retired.
Weekly posting is anticipated.

Legend:

- **Generator Type Key:** IC-Internal Combustion, ST=Steam Turbine, CT=Combustion Turbine, CC=Combined Cycle, H=Hydro, WT=Wind Turbine, PV=Photovoltaic
- **Fuel Type Key:** W=Wind, NU=Nuclear, NG=Natural Gas, O=Oil, C=Coal, B=Biomass, S=Solar, LFG=Land Fill Gas, WTR=Water

Request Status				Generating Facility		Maximum MWs		Location		Point of Interconnection				Study Availability			
Queue Position	Interconnection Request Receive Date	Queue Date	Application Status	Type	Fuel	Summer	Winter	County	State	Utility	Station or Transmision Line	Proposed On-line Date (as filed with IR)	Current On-line Date	Feasibility Study (IFS)	System Impact Study (SIS)	Facility Study (FAS)	Optional Study (OS)
56	12/21/2004	1/25/2005	Active	CC	NG	634		Clark	NV	PGE	El Dorado 230 kV Substation	6/1/2007	4/30/2006	NA	Complete	Complete	
57	12/1/2004	2/8/2005	Active	CC	NG	715		Colusa	CA	PGE	Between Cottonwood and Vaca-Dixon	1/1/2010	6/1/2009	NA	Complete		
58	1/25/2005	2/22/2005	Active	ST	G	90		Mineral	NV	SCE	Dixie-Valley-Oxbow 220	10/7/2007	10/7/2007	NA	Complete	In Progress	
59	3/25/2005	3/28/2005	Active	CT	NG	97.2		Kings	CA	PGE	Henrietta Substantion 70 kV	1/1/2008	12/1/2007	NA	Complete		
60	3/28/2005	3/28/2005	Active	CT	NG	94		Kern County	CA	PGE	Kern Oil Substation 115 kV	3/31/2007	1/31/2009	NA	Complete		
61	3/28/2005	3/30/2005	Active	ST	NG	73.27		Fresno	CA	PGE	70kV Helm-Kerman	5/31/2006	5/31/2006	NA	Complete		
62	3/28/2005	4/13/2005	Active	CC	NG	166.5		Humboldt	CA	PGE	Humboldt Bay-Humboldt #1 115 kV	5/31/2007	4/30/2007	NA			
63	3/25/2005	4/18/2005	Active	CC	NG	158		Contra Costa	CA	PGE	Contra Costa (230 kV)	1/1/2008	12/1/2007	NA	Complete	In Progress	
~~64~~	~~3/30/2005~~	~~4/28/2005~~	**WITHDRAWN**	~~CT~~	~~NG~~	~~147~~		~~Humboldt~~	~~CA~~	~~PGE~~	~~Humboldt Bay Power Plant Sub~~	~~5/1/2008~~	~~3/1/2008~~	~~NA~~	~~Complete~~		
65	5/6/2005	5/6/2005	Active	CT	NG	424.8		Los Angeles	CA	SCE	Long Beach Gen Station 220kv switchyard	1/1/2007	1/1/2007	NA	Complete	Agreement Tendered	
66	5/6/2005	5/6/2005	Active	CT	NG	500.5		Los Angeles	CA	SCE	Walnut Substation	9/1/2007	9/1/2007	NA	Complete	Agreement Tendered	
67	3/28/2005	5/9/2005	Active	CC	NG	245		Alameda	CA	PGE	Eastshore Substation	7/31/2008	4/30/2008	NA			
68	3/30/2005	5/11/2005	Active	Other	S	850		San Bernadino	CA	SCE	Pisgah 230 kV Substation	1/31/2008	12/31/2007	Waived	In Progress		
69	5/6/2005	6/7/2005	Active	CT	NG	527		San Bernardino	CA	SCE	Etiwanda 230kV Substation	8/1/2008	5/1/2008	NA	Complete		
70	5/9/2005	6/14/2005	Active	IC	LFG	10.7		San Mateo	CA	PGE	Hillsdale Junction-Half Moon Bay 60 kV line	12/23/2005	4/1/2006	NA	Complete		
~~71~~	~~5/6/2005~~	~~6/15/2005~~	**WITHDRAWN**	~~CC~~	~~NG~~	~~591~~		~~Clark~~	~~NV~~	~~SCE~~	~~Eldorado 500/230kV Substation~~	~~2/28/2007~~	~~1/31/2007~~	~~Complete~~	~~Tendered~~		
72	4/26/2005	6/21/2005	Active	H	WTR	500		Riverside	CA	SCE/SDGE	Proposed Lee Lake Substation	12/31/2008	9/30/2008	NA	In Progress		
73	6/6/2005	6/27/2005	Active	WT	W	250		Kern	CA	SCE	Antelope Sub	12/31/2007	12/31/2008	Waived	In Progress		
74	7/12/2005	7/12/2005	Active	WT	W	125		Shasta	CA	PGE	230kV line btn Pit#3 & Round Mtn	12/15/2007	9/1/2007	In Progress			
75	4/28/2005	7/15/2005	Active	ST	B	10.5		Madera	CA	PGE	Le Grand-Chowcilla 115 kV	12/31/2005	12/1/2005	NA	Complete		
76	4/28/2005	7/15/2005	Active	ST	B	10.5		Merced	CA	PGE	PG&E Merced #1 70 kV circuit	12/31/2005	12/1/2005	NA	Complete		
77	8/19/2005	8/22/2005	Active	WT	W	300		Kern	CA	SCE/PG&E	TBD Bakersfiled	11/15/2007	11/15/2007	AgreementTendered			
78	8/31/2005	8/31/2005	Active	Other	S	300		Imperial	CA	SDGE	Imperial Valley Substation	12/31/2009	12/31/2009	Waived	In Progress		
79	5/24/2005	9/7/2005	Active	WT	W	51		Kern	CA	SCE	Proposed "New" Dutchwind Substation	6/1/2006	12/15/2009	In Progress			
80	9/12/2005	9/12/2005	Active	CC	NG	890		Los Angeles	CA	SCE	Laguna Bell Substation 230 kV	7/31/2008	7/31/2008	Waived	In Progress		
81	9/13/2005	9/13/2005	Active	ST	G	55		Lake	CA	PGE	Geysers #17 - Fulton 230 kV Line	8/1/2006	8/1/2006	Waived	In Progress		
82	6/10/2005	9/14/2005	Active	ST	B	6.8		Humboldt	CA	PGE	Rio Dell Substation 60 KV	1/1/2006	12/30/2005	Waived	ISISA Tendered		
83	9/16/2005	9/16/2005	Active	WT	W	60		San Bernardino	CA	SCE	Lugo-Pisgah No. 2 230 kV tran line	12/31/2008	12/31/2008	In Progress			
84	11/22/2005	12/1/2005	Active	WT	W	400		Kern	CA	SCE	Cottownwind Substation	12/31/2009	12/31/2009	AgreementTendered			
85	12/28/2005	12/28/2005	Active	WT	W	120		Kern	CA	SCE	Segment 3 230 Collector Loop Tehachapi	9/30/2007	9/30/2007				

Notes:

This Queue posting reflects the requirements of the FERC Order 2003 for Large Generator Interconnection Procedures (LGIP).
Generator Interconnection Requests or applications Completed or Withdrawn prior to this posting are not shown.
Future withdrawals will be indicated in the Application Status as Withdrawn and their Queue position will be retired.
Weekly posting is anticipated.

Legend:

- **Generator Type Key:** IC-Internal Combustion, ST=Steam Turbine, CT=Combustion Turbine, CC=Combined Cycle, H=Hydro, WT=Wind Turbine, PV=Photovoltaic
- **Fuel Type Key:** W=Wind, NU=Nuclear, NG=Natural Gas, O=Oil, C=Coal, B=Biomass, S=Solar, LFG=Land Fill Gas, WTR=Water