Appendix A

Load Flow Plots

Vernon Power Plant Expansion Project SIS Load Flow Plots

Plot	Description
Plot #1	2009 Heavy Summer – 914 MW Project (MW/MVAR)
Plot #2	2009 Heavy Summer – 914 MW Project – 610 MW (MW/MVAR)
Plot #3	2009 Light Spring – 914 MW Project (MW/MVAR)
Plot #4	2009 Light Spring – 914 MW Project – 610 MW (MW/MVAR)
Plot #5	2011 Heavy Summer – 914 MW Project (MW/MVAR)
Plot #6	2011 Heavy Summer – 914 MW Project – 610 MW (MW/MVAR)
Plot #7	2011 Light Spring – 914 MW Project (MW/MVAR)
Plot #8	2011 Light Spring – 914 MW Project – 610 MW (MW/MVAR)

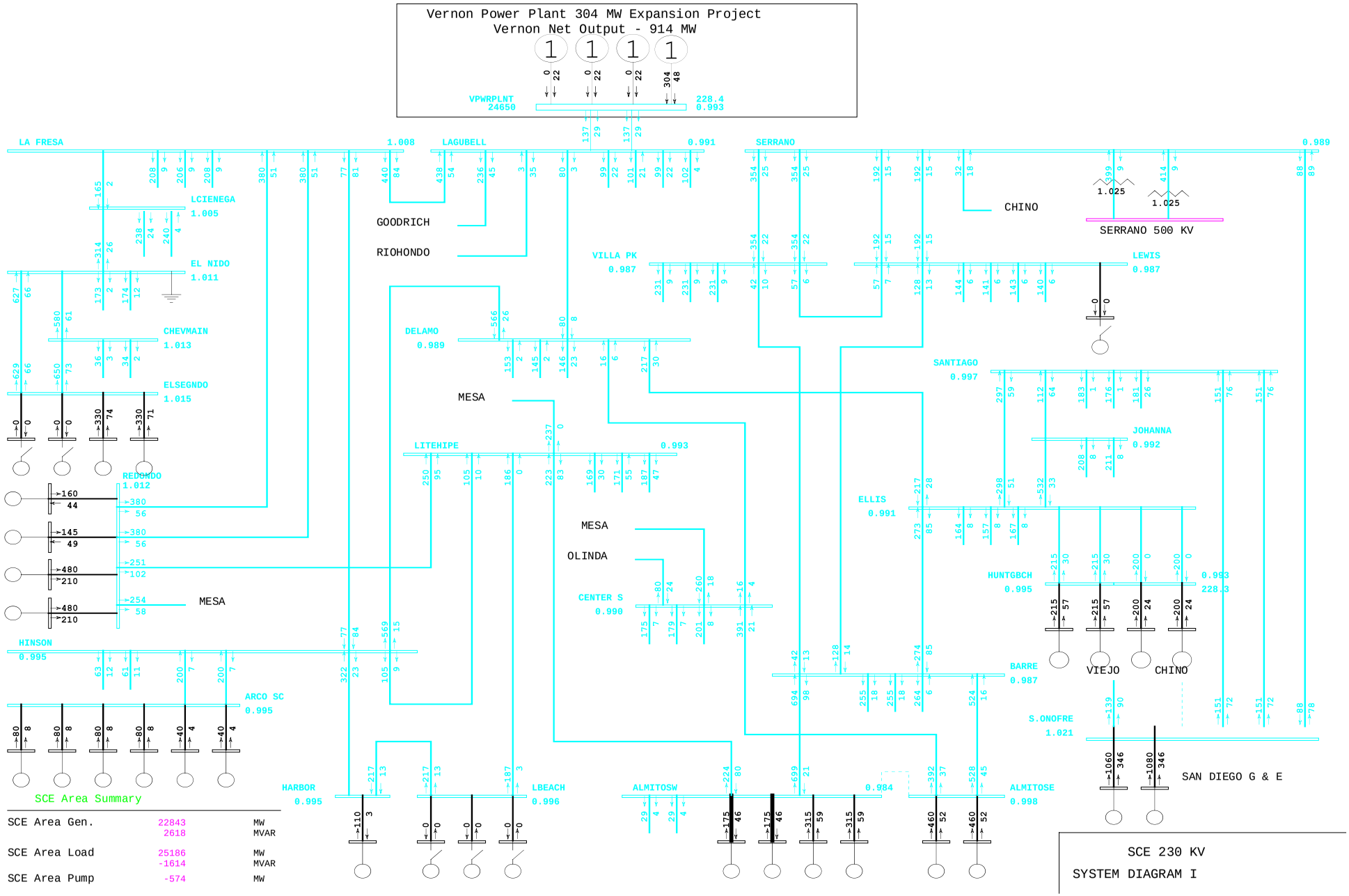

General Electric International, Inc. PSLF Program Thu Nov 16 16:48:21 2006 vpp304mw\09hs_pst-vpp914-610mw-rev1.sav

	2009 Heavy Summer: Case: 09hs_pst-vpp914-610mw-rev1.sav Load scaled from 2008 HS to 2009 HS	VPP 914 MW Project with 610 MW Removed	MW/MVAR sce230-main-304exp.dr Rating = 1

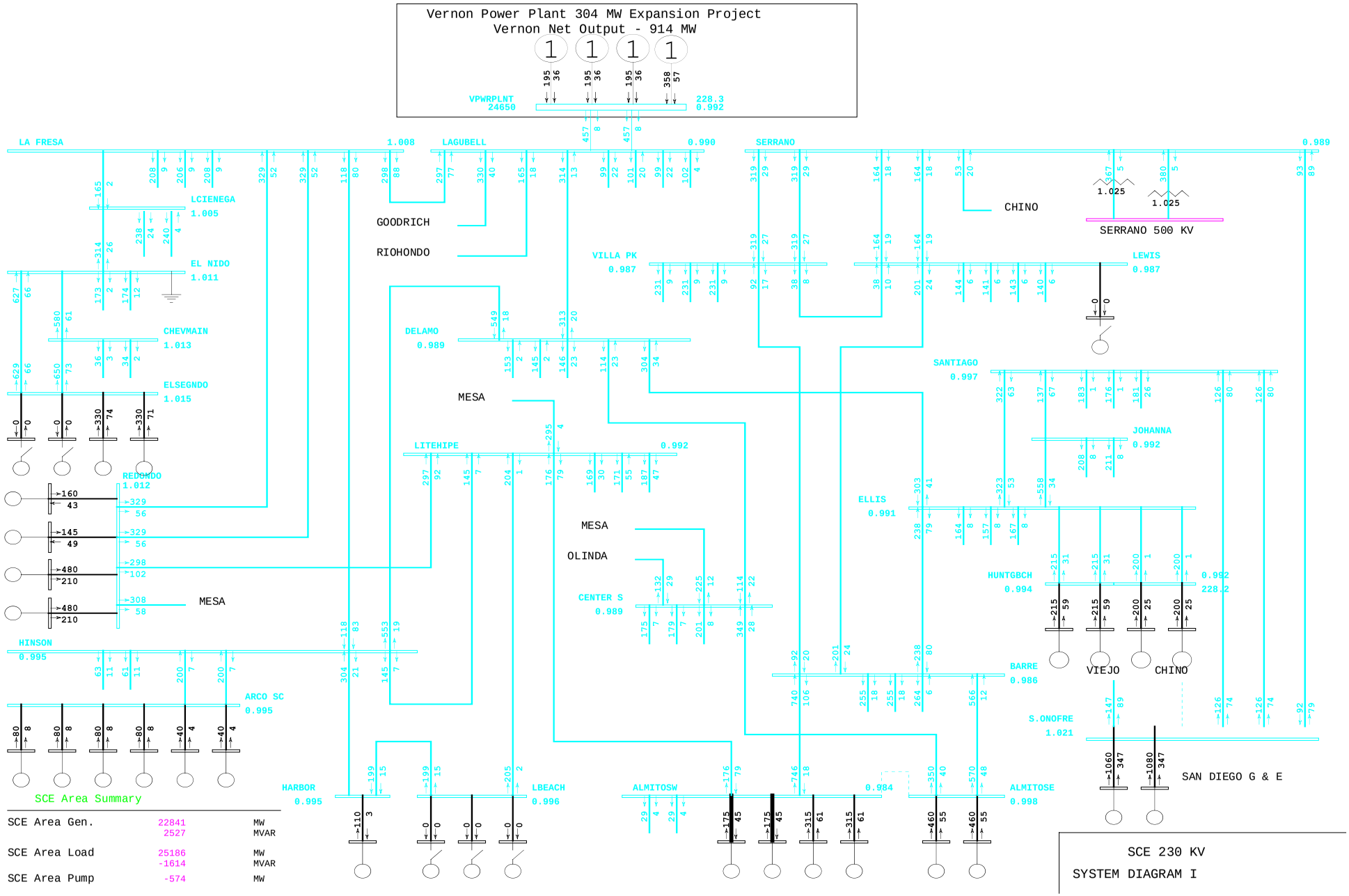

General Electric International, Inc. PSLF Program Thu Nov 16 16:51:42 2006 vpp304mw\09hs_pst-vpp914mw-rev1.sav

	2009 Heavy Summer: Case: 09hs_pst-vpp914mw-rev1.sav Load scaled from 2008 HS to 2009 HS	VPP 914 MW Project	MW/MVAR sce230-main-304exp.dr Rating = 1

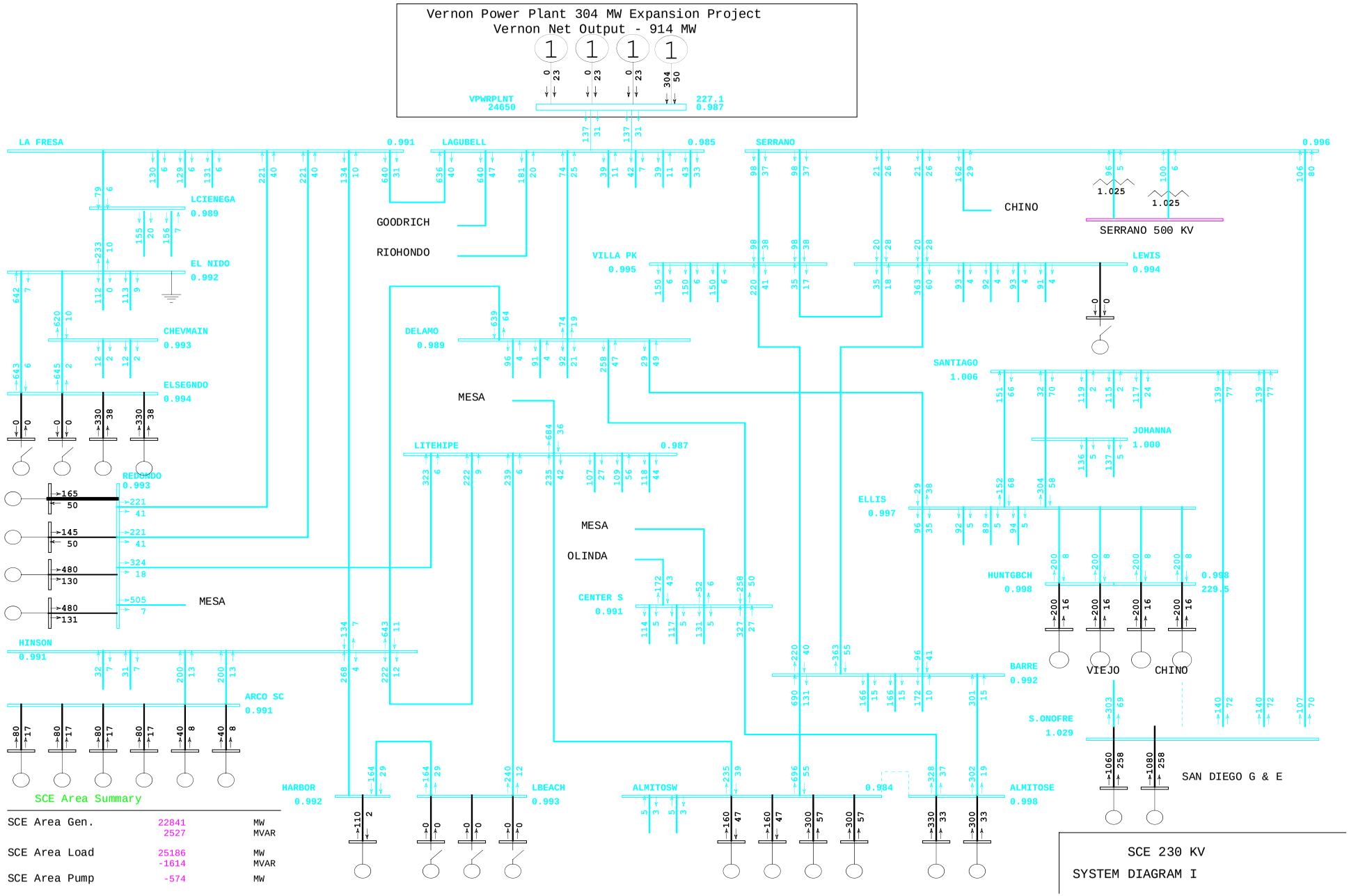

General Electric International, Inc. PSLF Program Thu Nov 16 16:54:00 2006 vpp304mw\09lsp_pst-vpp914-610mw-rev1.sav

	2009 Light Spring: POST Vernon 304 MW Expansion Project Case: 09lsp_pst-vpp914-610mw-rev1.sav Load scaled from 2008 LSP to 2009 LSP (65% of 2009 HS)	VPP 914 MW Project with 610 MW Removed	MW/MVAR sce230-main-304exp.dr Rating = 1

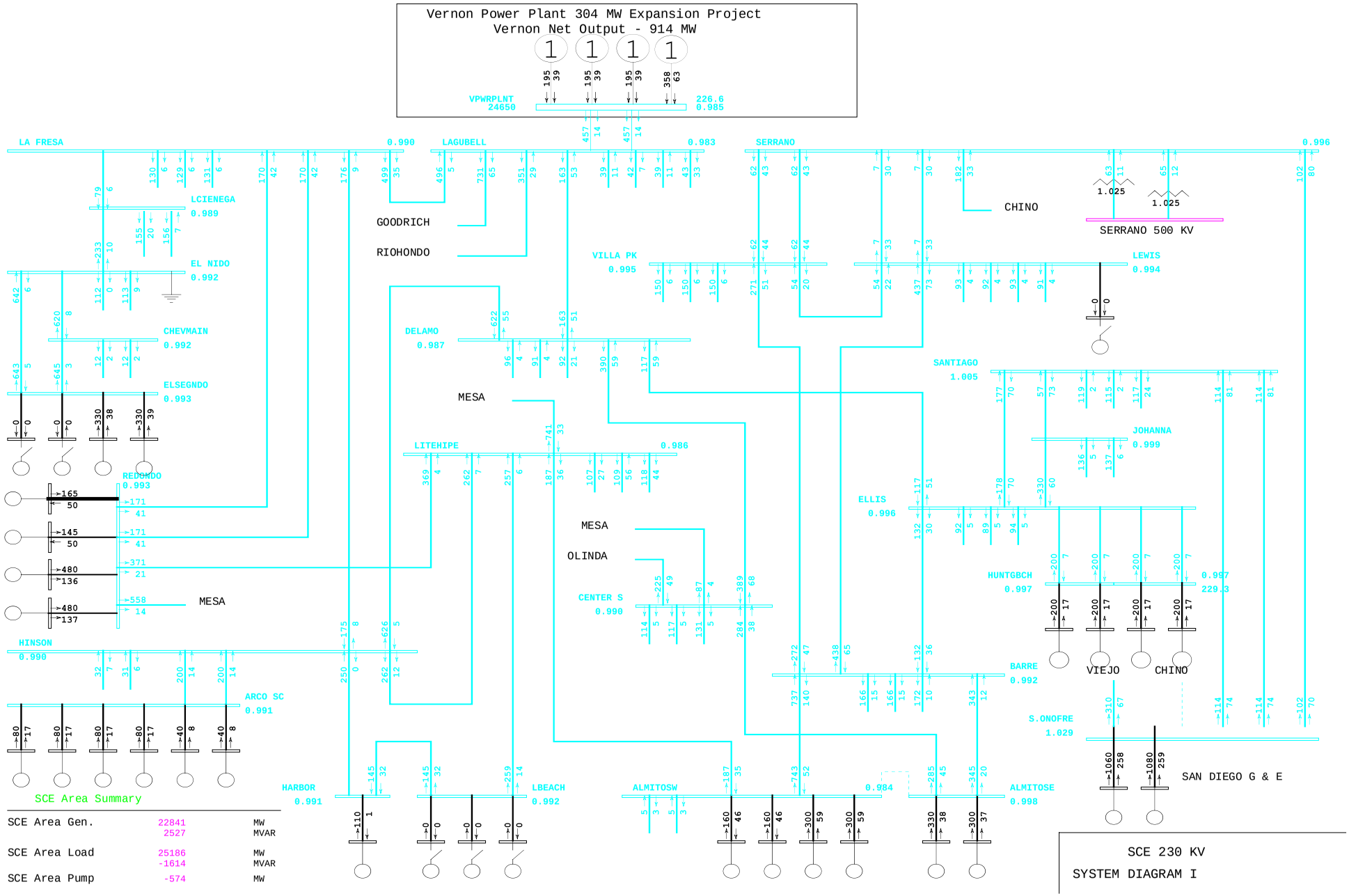

General Electric International, Inc. PSLF Program Thu Nov 16 16:55:21 2006 vpp304mw\09lsp_pst-vpp914mw-rev1.sav

2009 Light Spring: POST Vernon 304 MW Expansion Project Case: 09lsp_pst-vpp914mw-rev1.sav Load scaled from 2008 LSP to 2009 LSP (65% of 2009 HS)	VPP 914 MW Project	MW/MVAR sce230-main-304exp.dr Rating = 1

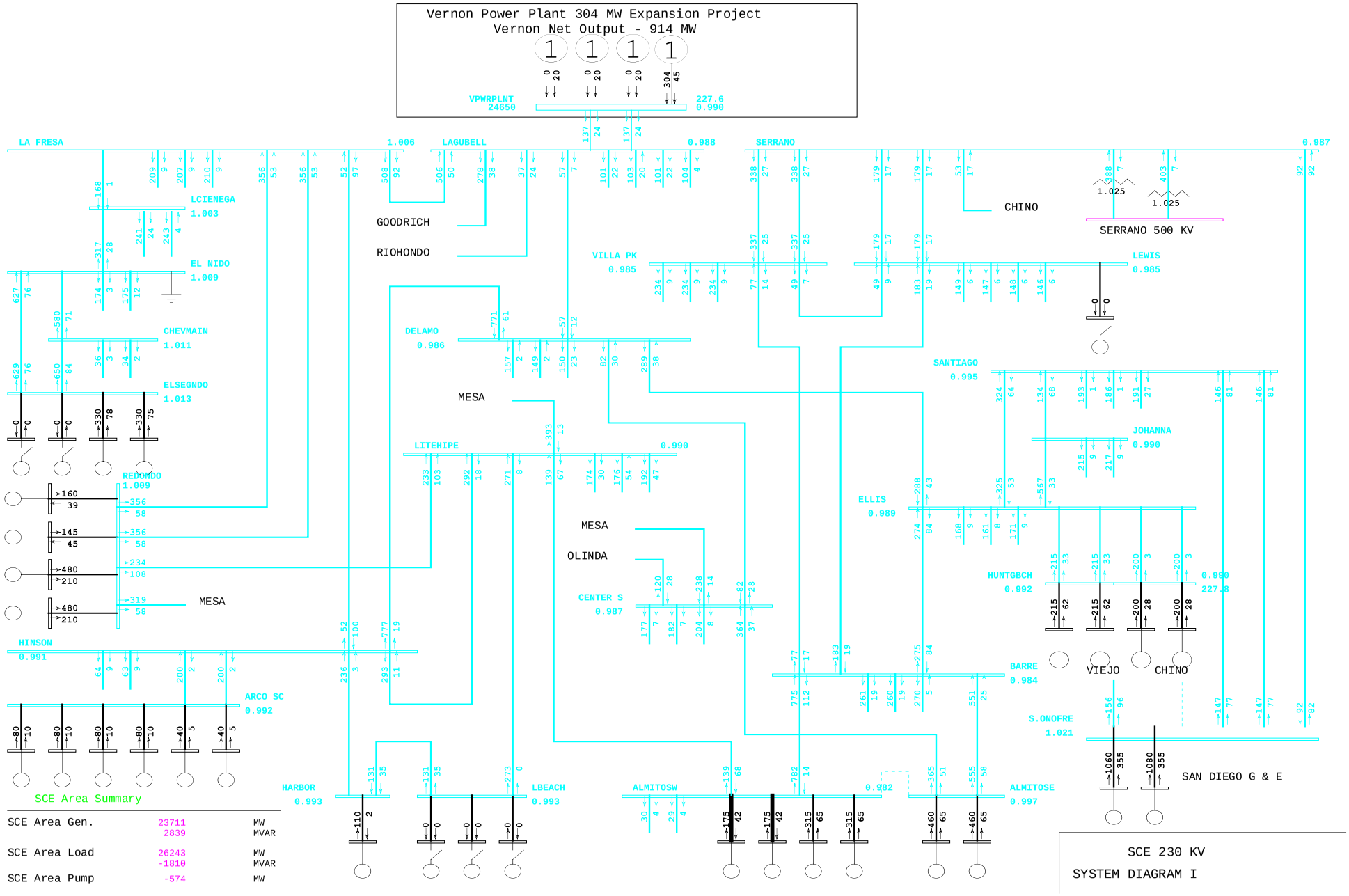

General Electric International, Inc. PSLF Program Thu Nov 16 16:58:44 2006 vpp304mw\11hs_pst-vpp914-610mw-rev1.sav

	2011 Heavy Summer: POST Vernon 304MW Expansion Project Case: 11hs_pst-vpp914-610mw-rev1.sav Load scaled from 2008 HS to 2011 HS	VPP 914 MW Project with 610 MW Removed	MW/MVAR sce230-main-304exp.dr Rating = 1

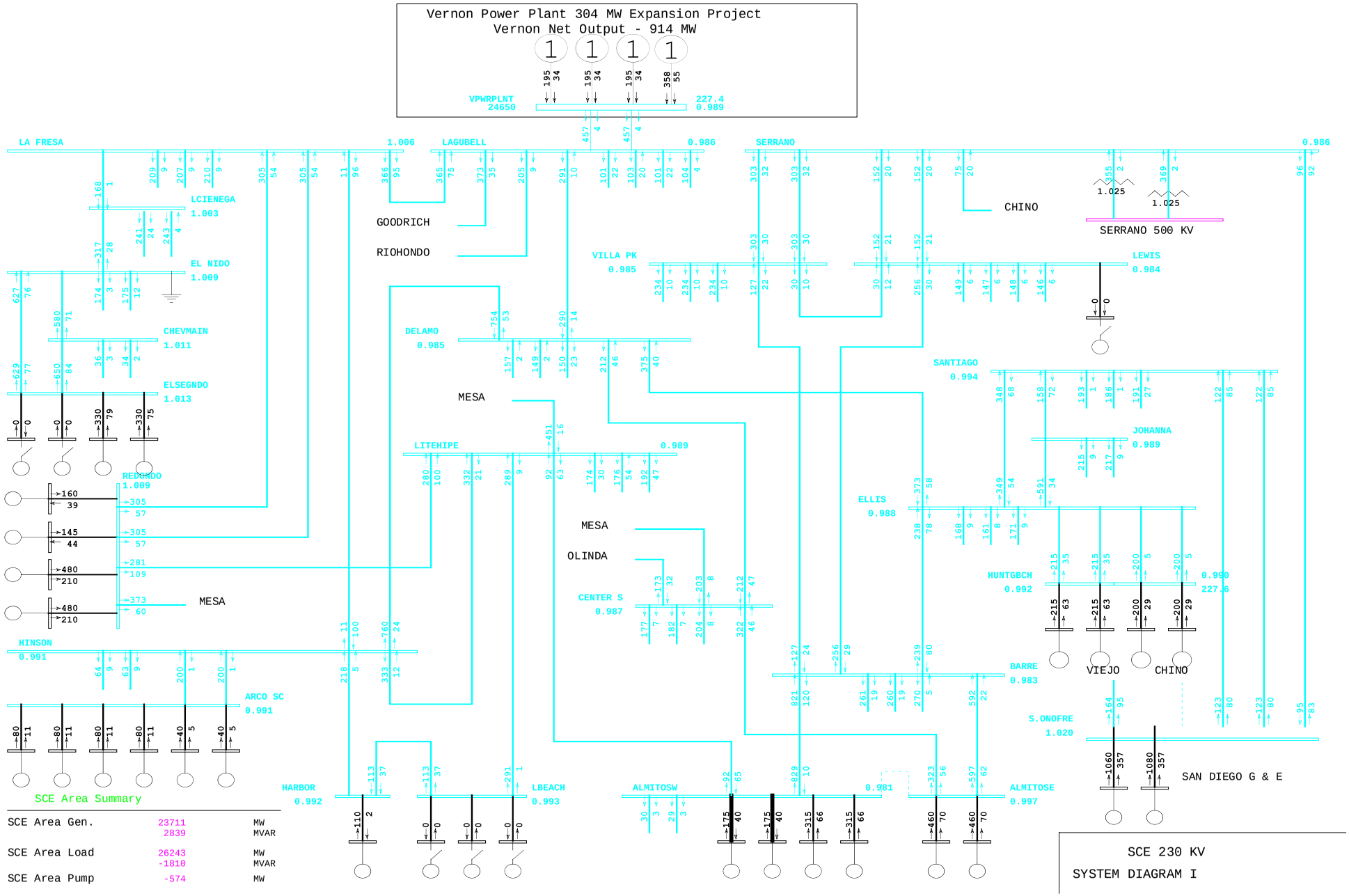

General Electric International, Inc. PSLF Program Thu Nov 16 16:59:57 2006 vpp304mw\11hs_pst-vpp914mw-rev1.sav

	2011 Heavy Summer: POST Vernon 304MW Expansion Project	VPP 914 MW Project	MW/MVAR
	Case: 11hs_pst-vpp914mw-rev1.sav		sce230-main-304exp.dr
	Load scaled from 2008 HS to 2011 HS		Rating = 1

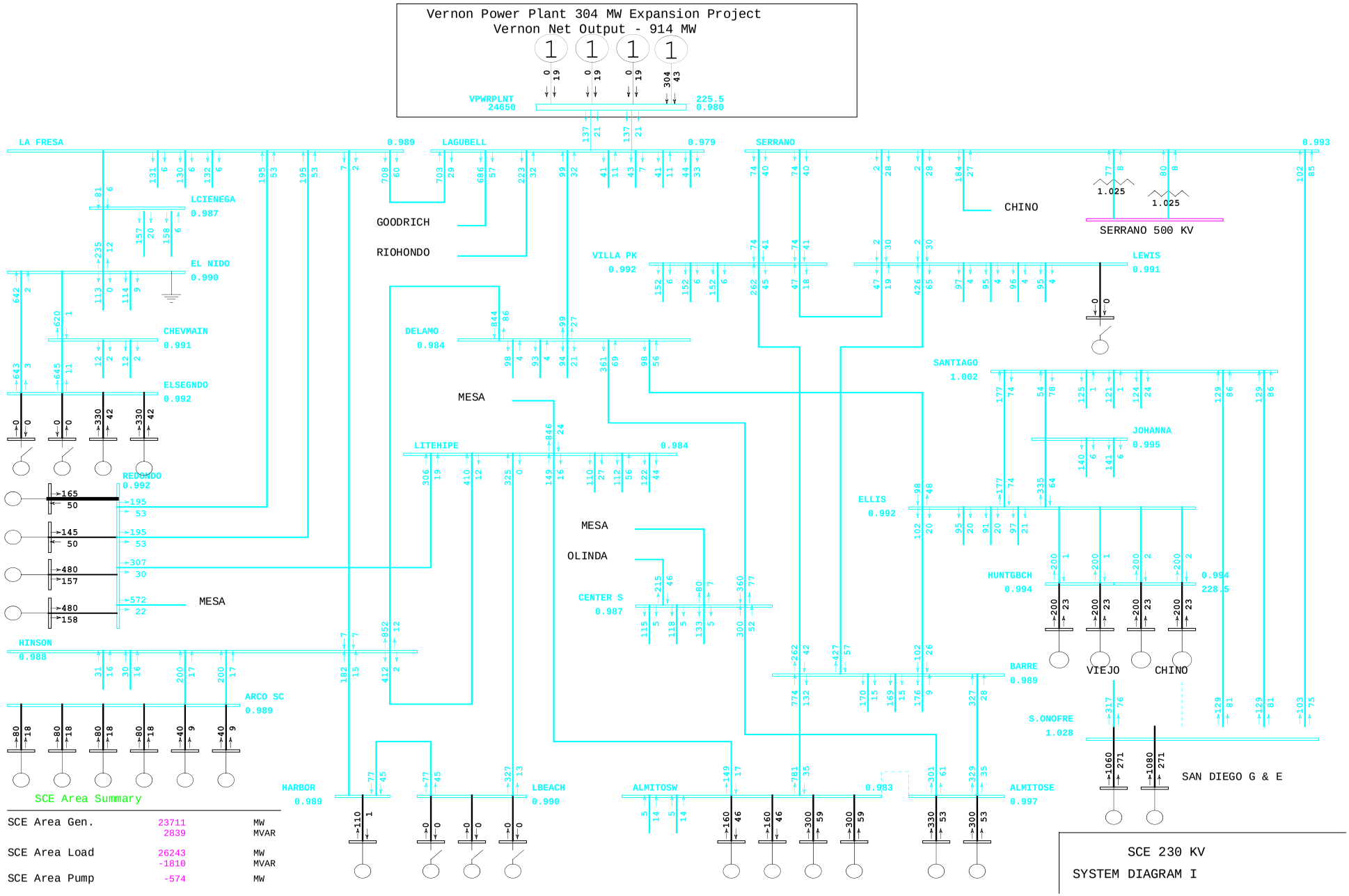

General Electric International, Inc. PSLF Program Thu Nov 16 17:01:21 2006 vpp304mw\11lsp_pst-vpp914-610mw-rev1.sav

	2011 Light Spring: POST Vernon 304MW Expansion Project Case: 11LSp_pst-vpp914-610mw-rev1.sav Load scaled from 2008 LSP to 2011 LSP (65% of 2011 HS)	VPP 914 MW Project with 610 MW Removed	MW/MVAR sce230-main-304exp.dr Rating = 1

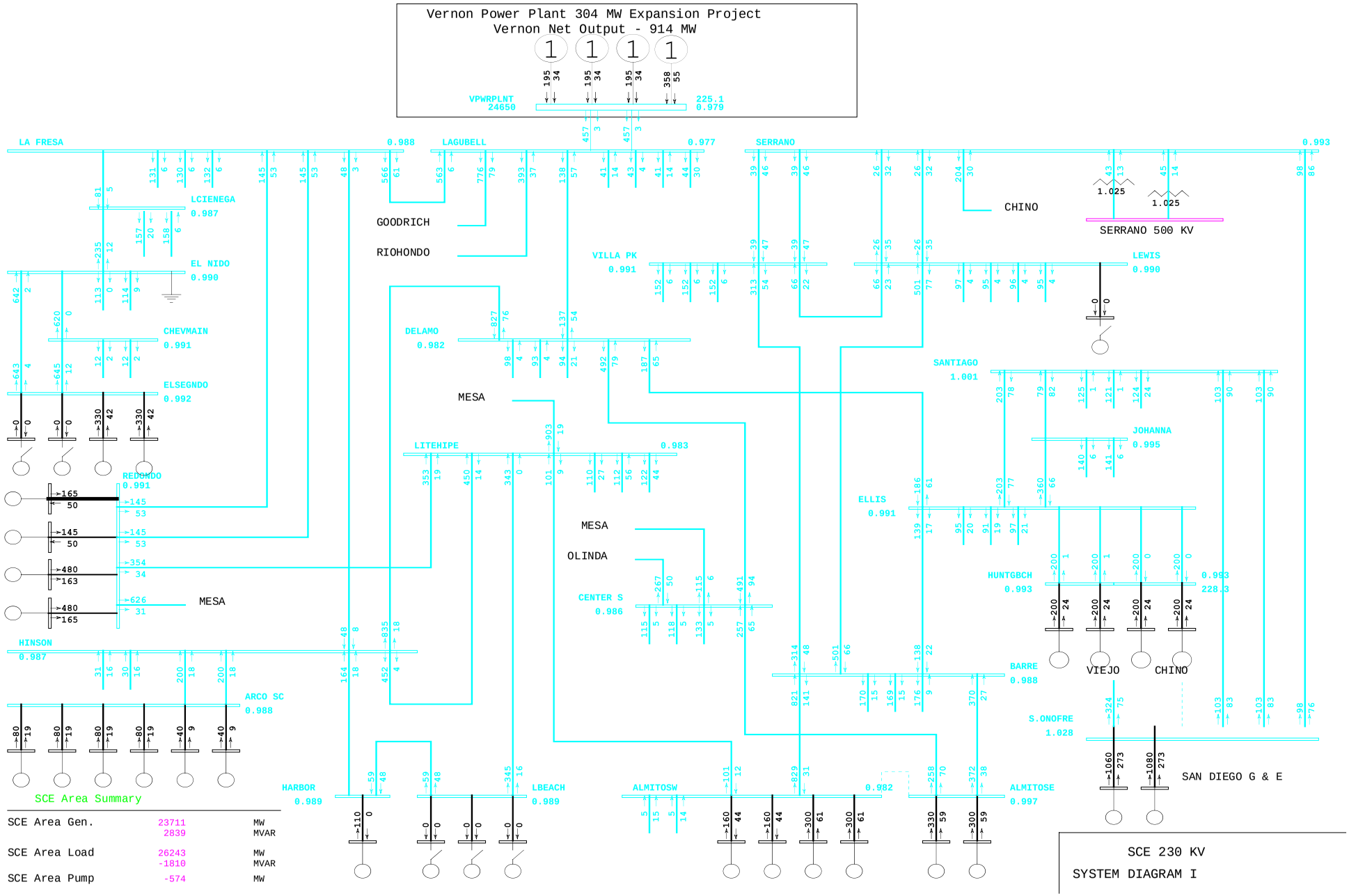

General Electric International, Inc. PSLF Program Thu Nov 16 17:02:09 2006 vpp304mw\11lsp_pst-vpp914mw-rev1.sav

2011 Light Spring: POST Vernon 304MW Expansion Project Case: 11LSp_pst-vpp914-610mw-rev1.sav Load scaled from 2008 LSP to 2011 LSP (65% of 2011 HS)	VPP 914 MW Project	MW/MVAR sce230-main-304exp.dr Rating = 1