ATTACHMENT TSE-1B

CITY OF VERNON
VERNON POWER PLANT (610 MW)

POWER FLOW SENSITIVITY
ADDENDUM TO SYSTEM IMPACT STUDY

November 15, 2006

SOUTHERN CALIFORNIA
EDISON
An EDISON INTERNATIONAL® Company

Prepared by
Phillip Leung

Southern California Edison Company

SUMMARY

Southern California Edison Company ("SCE") has performed a power flow sensitivity study ("Study") to evaluate a different generation dispatch scenario from that utilized in the original System Impact Study dated June 23, 2006 ("SIS") for the proposed Vernon Power Plant ("VPP") 610 MW project. The objective was to determine whether a different generation dispatch scenario would cause more overloads on the SCE's transmission system than the one that had already been identified in the original VPP 610 MW SIS. The Study results indicate that the VPP 610 MW project aggravates overloads on three more transmission facilities as a result of different generation dispatch scenario in the base case.

The sensitivity was performed for two system conditions: a 2009 heavy summer one-in-ten load forecast and a 2009 light spring load forecast (65% of the heavy summer load). All overloads were identified in light spring, during high generation and N-2 conditions in the South Bay area.

Power Flow Results

This Study identified the following overloads:

1. The *Del Amo-Hinson 230 kV No.1 line* was overloaded from 106% to 108% under the outages of Lighthipe-Mesa 230 kV No.1 line and Mesa-Redondo 230 kV No.1 line.
2. The *Long Beach-Lighthipe 230 kV No.1 line* was overloaded from 105% to 110% under the outages of Del Amo-Hinson 230 kV No.1 line and Hinson-Lighthipe 230 kV No.1 line.
3. The *Hinson-Lighthipe 230 kV No.1 line* was overloaded from 117% to 124% under the outages of Del Amo-Hinson 230 kV No.1 line and Long Beach-Lighthipe 230 kV No.1 line.

STUDY CONDITIONS AND ASSUMPTIONS

A. Study Criteria

Study criteria for the sensitivity study are same as System Impact Study.

B. Conditions and Assumptions

The original VPP 610 MW project in-service date was March, 2008. When City of Vernon submitted the VPP 304 MW Expansion project application, the in-service date was postponed to March, 2009 including the 610 MW project. Therefore 2009 heavy summer and light spring conditions are used as the base for this sensitivity study. Below is a summary table of case attributes.

Table 1. Summary of case attributes.

SOUTHERN CALIFORNIA IMPORT TRANSMISSION ("SCIT"), EAST-OF-RIVER ("EOR") AND WEST-OF-RIVER ("WOR") FLOWS SCE AREA TOTAL GENERATION, IMPORT, LOAD AND LOSSES (MW)				
	2009 Heavy Summer		2009 Light Spring	
	Case 1 Pre-project	Case 2 Post-Project	Case 3 Pre-Project	Case 4 Post-Project
SCIT	9,335	9,233	6,163	6,162
EOR	6,963	6,981	7,712	7,736
WOR	8,126	8,130	8,835	8,847
Generation*	18,858	18,857	13,662	13,662
Import	-6,380	-6,380	-2,895	-2,895
Load	24,804	24,804	16,149	16,149
Losses	434	432	430	433

Same contingency for the SIS is evaluated in this sensitivity.

STUDY RESULTS

Load Flow Study

2009 Heavy Summer

No overloads were found under base case, N-1 and N-2 conditions.

2009 Light Spring

No overloads were found under base case and N-1 conditions. Three 230 kV transmission facilities were found overloaded under N-2 conditions. See table 1 for details.

Table 1. Power Flow Contingency Analysis – Percent Loading

Affected Elements	Normal / Emergency Ratings (Amps)	2009lsp-pre-VPP	2009lsp-post-VPP	Percentage over Normal Rating		Percentage over Emergency Rating		Contingency Description
				Pre-Project	Post-Project	Pre-Project	Post-Project	
Del Amo-Hinson 230kV Line No.1	2400/2400	2547	2584	106%	108%	106%	108%	LITEHIPE - MESA CAL 230 ck 1and MESA CAL - REDONDO 230 ck 1
Long Beach-Lighthipe 230kV Line No.1	1150/1500	1577	1655	137%	144%	105%	110%	HINSON - DELAMO 230 ck 1and LITEHIPE - HINSON 230 ck 1
Hinson-Lighthipe 230kV Line No.1	1185/1600	1876	1980	158%	167%	117%	124%	HINSON - DELAMO 230 ck 1and LBEACH - LITEHIPE 230 ck 1

CONCLUSIONS

Power Flow Analysis

2009 Heavy Summer

No overloads were found.

2009 Light Spring

This Study identified three (3) Category "C" contingency affected elements for the 2009 light spring system condition:

1. The *Del Amo-Hinson 230 kV No.1 line* was overloaded from 106% to 108% under the outages of Lighthipe-Mesa 230 kV No.1 line and Mesa-Redondo 230 kV No.1 line.
2. The *Long Beach-Lighthipe 230 kV No.1 line* was overloaded from 105% to 110% under the outages of Del Amo-Hinson 230 kV No.1 line and Hinson-Lighthipe 230 kV No.1 line.
3. The *Hinson-Lighthipe 230 kV No.1 line* was overloaded from 117% to 124% under the outages of Del Amo-Hinson 230 kV No.1 line and Long Beach-Lighthipe 230 kV No.1 line.

The unrealistic assumption of all generation in service during light spring condition and N-2 contingency make the probability of these overloads happening to be very remote. Therefore, SCE does not recommend upgrading these transmission facilities. SCE will evaluate the risk in the Annual Transmission Expansion Plan.

APPENDIX

POWER FLOW PLOTS

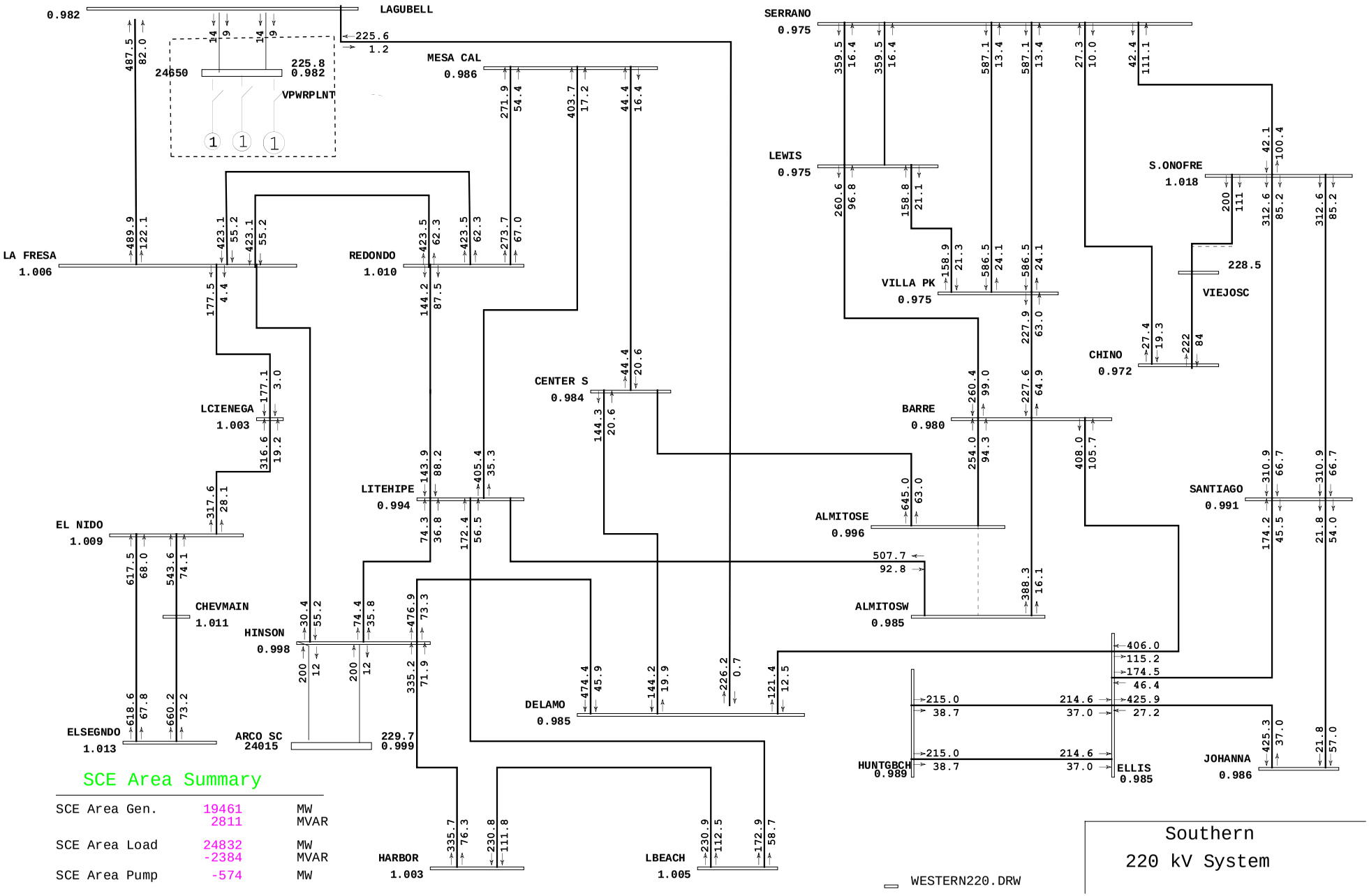

SCE Area Summary

SCE Area Gen.	19461	MW
	2811	MVAR
SCE Area Load	24832	MW
	-2384	MVAR
SCE Area Pump	-574	MW

Southern
220 kV System

General Electric International, Inc. PSLF Program Sun Nov 12 14:46:36 2006 vpp610-wdatrestudy\2009hs-pre-vpp-restudy.sav

2009 Light Spring - Vernon Power Project 610 MW
CASE NAME: 2009hs-pre-vpp-restudy.sav
BASE CASE N-0

MW/MVAR
sce230-southern-post
Rating = 1

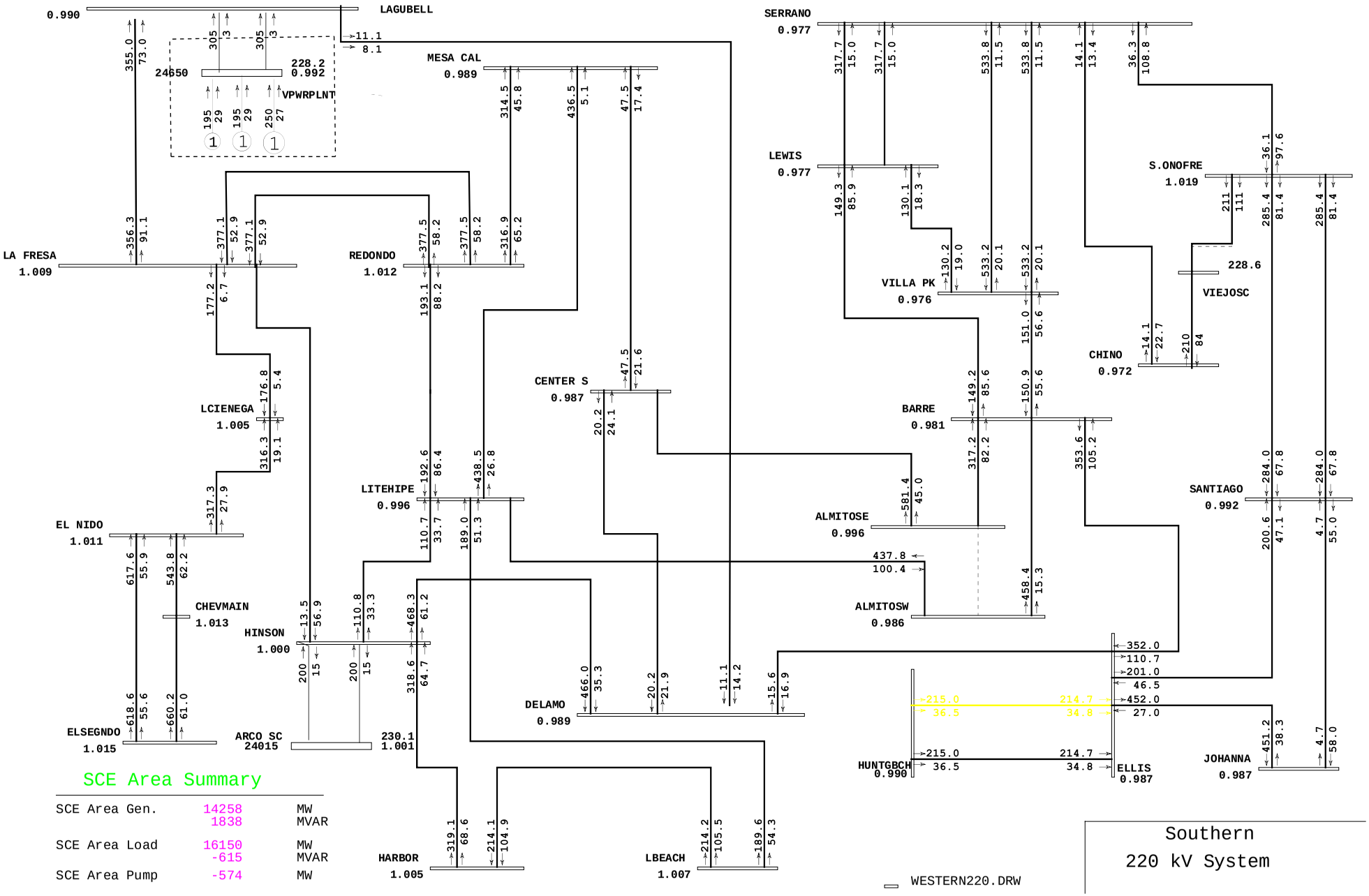

SCE Area Summary

SCE Area Gen.	14258	MW
	1838	MVAR
SCE Area Load	16150	MW
	-615	MVAR
SCE Area Pump	-574	MW

Southern
220 kV System

General Electric International, Inc. PSLF Program Sun Nov 12 15:25:34 2006 vpp610-wdatrestudy\2009hs-pst-vpp-restudy.sav

2009 Light Spring - Vernon Power Project 610 MW
CASE NAME: 2009hs-post-vpp-restudy.sav
BASE CASE N-0

MW/MVAR
sce230-southern-post
Rating = 1

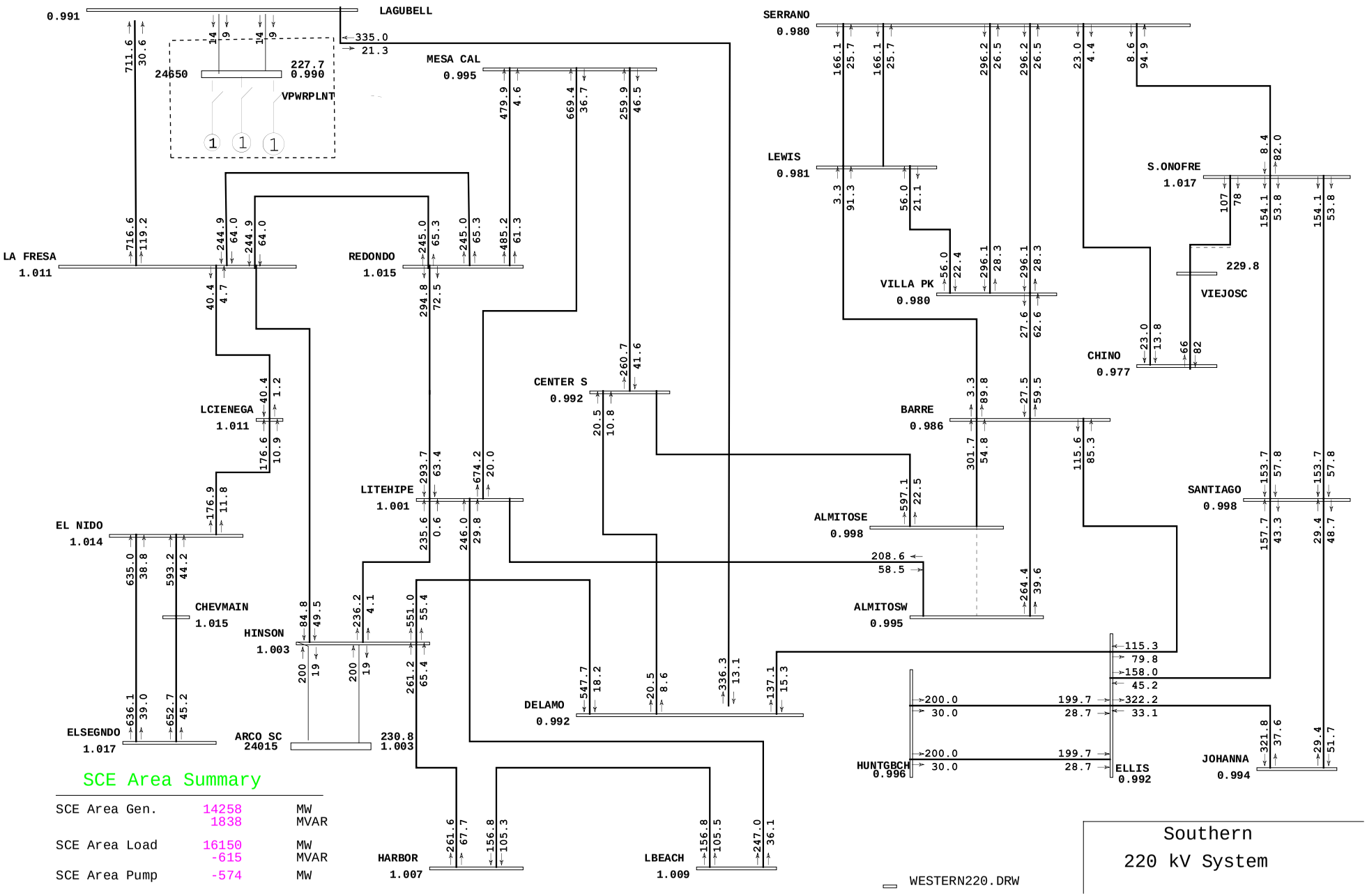

SCE Area Summary

SCE Area Gen.	14258	MW
	1838	MVAR
SCE Area Load	16150	MW
	-615	MVAR
SCE Area Pump	-574	MW

Southern
220 kV System

General Electric International, Inc. PSLF Program Sun Nov 12 15:22:10 2006 vpp610-wdatrestudy\2009lsp-pre-vpp-restudy.sav

2009 Light Spring - Vernon Power Project 610 MW
CASE NAME: 2009lsp-pre-vpp-restudy.sav
BASE CASE N-0

MW/MVAR
sce230-southern-post
Rating = 1

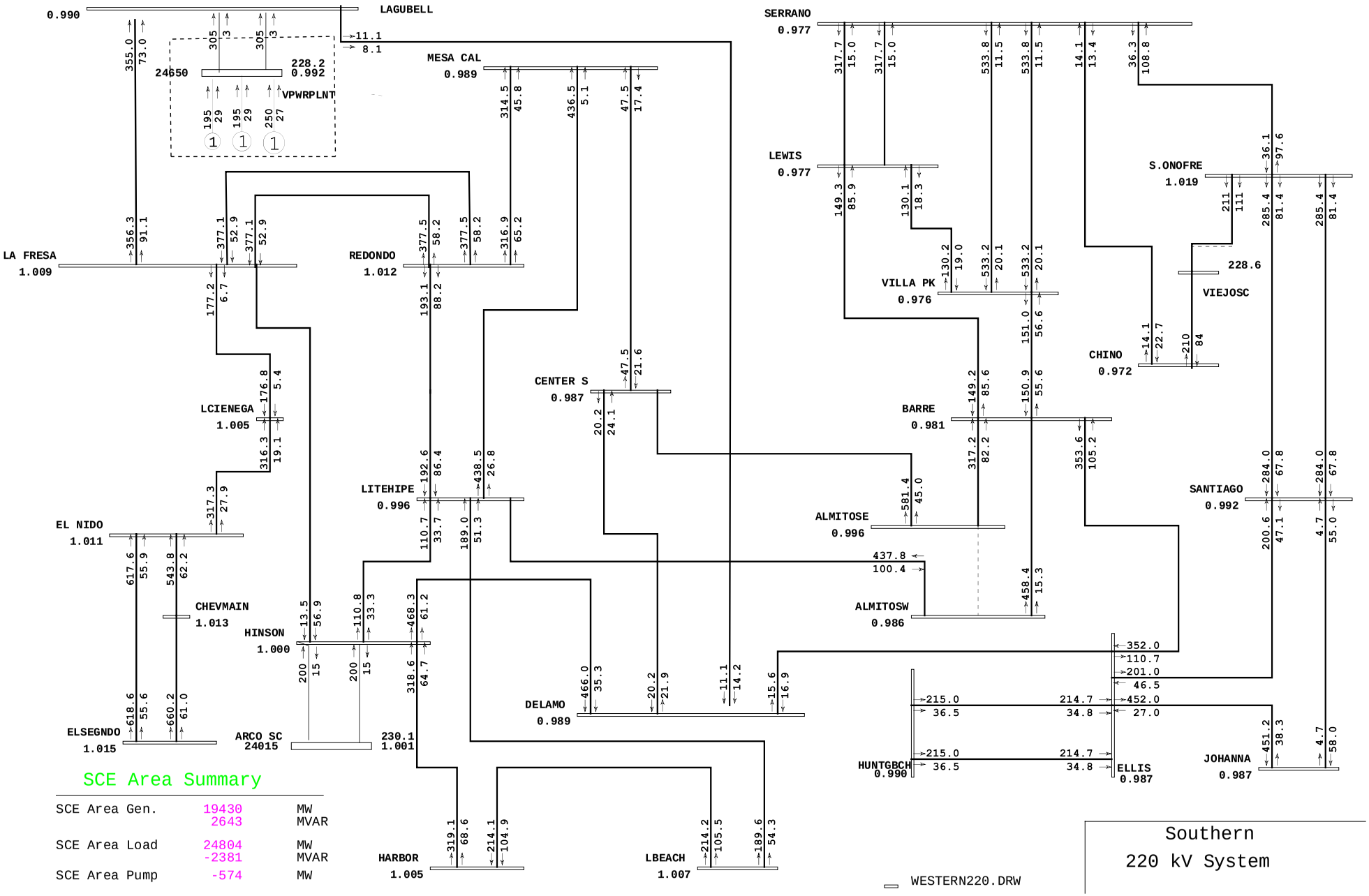

SCE Area Summary

SCE Area Gen.	19430	MW
	2643	MVAR
SCE Area Load	24804	MW
	-2381	MVAR
SCE Area Pump	-574	MW

Southern
220 kV System

General Electric International, Inc. PSLF Program Sun Nov 12 15:08:54 2006 vpp610-wdatrestudy\2009hs-pst-vpp-restudy.sav

2009 Light Spring - Vernon Power Project 610 MW
CASE NAME: 2009lsp-post-vpp-restudy.sav
BASE CASE N-0

MW/MVAR
sce230-southern-post
Rating = 1

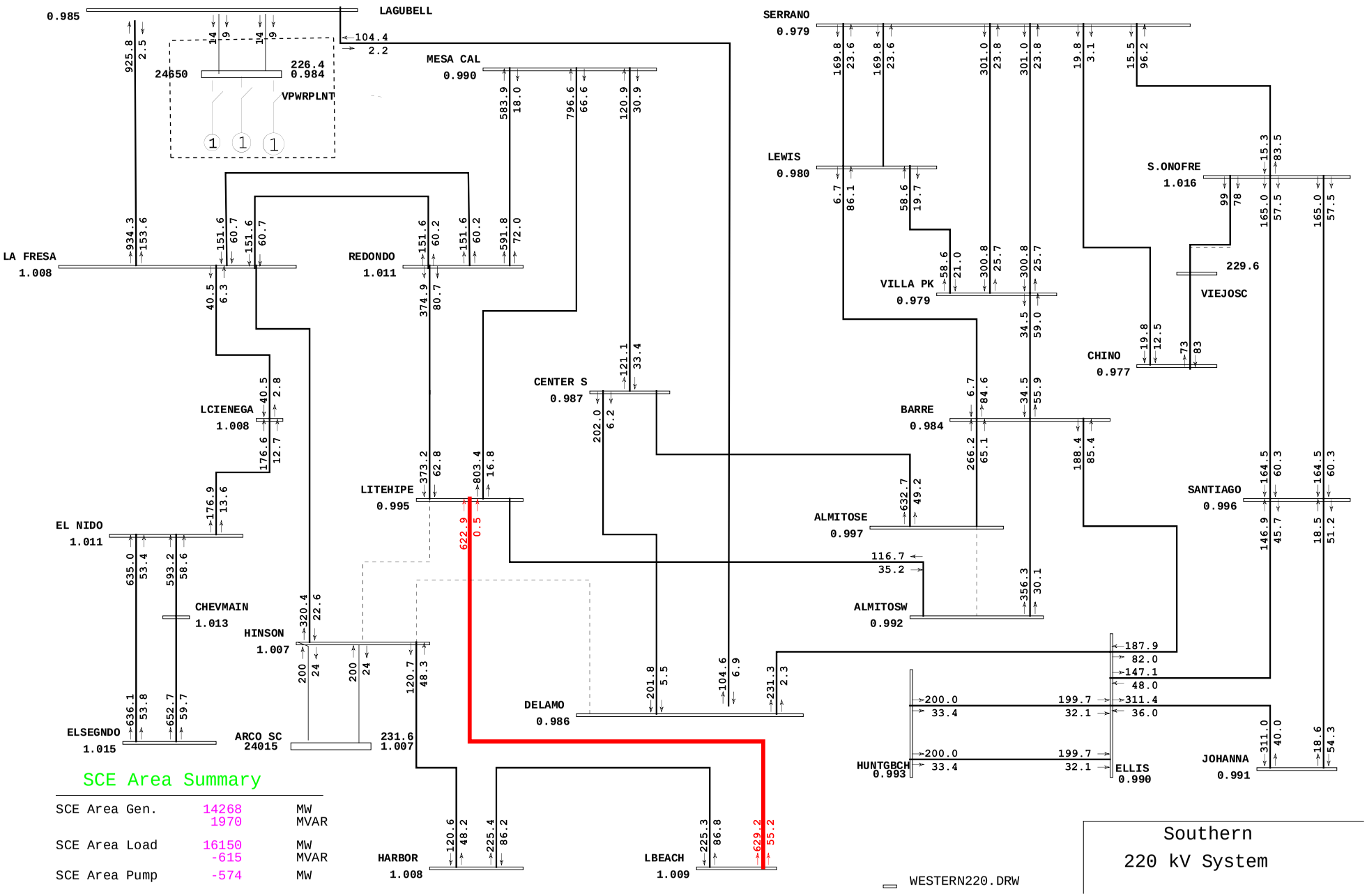

SCE Area Summary

SCE Area Gen.	14268	MW
	1970	MVAR
SCE Area Load	16150	MW
	-615	MVAR
SCE Area Pump	-574	MW

Southern
220 kV System

General Electric International, Inc. PSLF Program Sun Nov 12 14:57:50 2006 vpp610-wdatrestudy\2009lsp-pre-vpp-restudy.sav

2009 Light Spring - Vernon Power Project 610 MW
CASE NAME: 2009lsp-pre-vpp-restudy.sav
N-2: DEL AMO-HINSON AND HINSON-LIGHTHIPE 230KV LINES

MW/MVAR
sce230-southern-post
Rating = 1

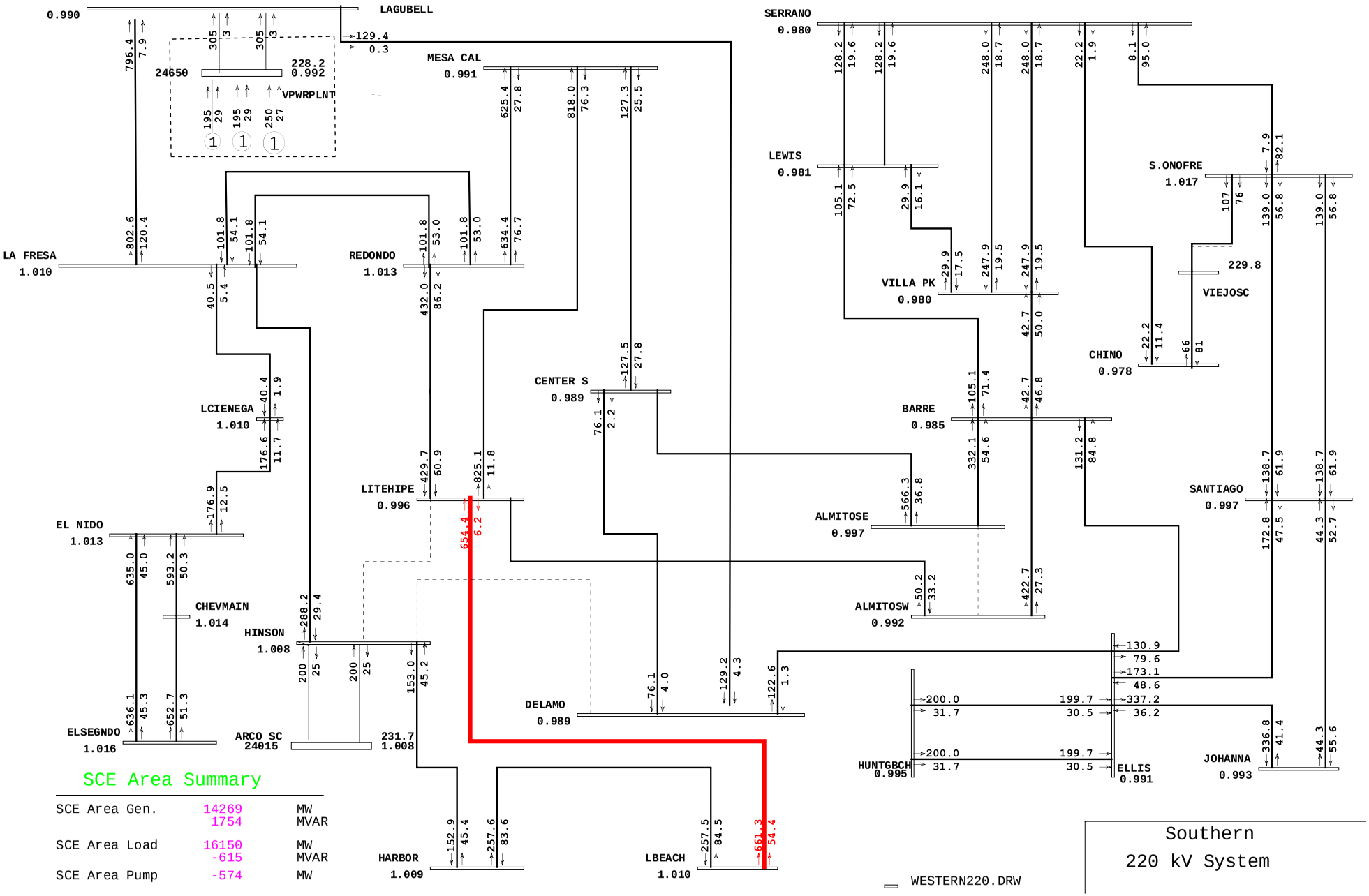

General Electric International, Inc. PSLF Program Sun Nov 12 14:53:28 2006 vpp610-wdatrestudy\2009lsp-post-vpp-restudy.sav

2009 Light Spring - Vernon Power Project 610 MW

CASE NAME: 2009lsp-post-vpp-restudy.sav

N-2: DEL AMO-HINSON AND HINSON-LIGHTHIPE 230KV LINES

MW/MVAR

sce230-southern-post

Rating = 1

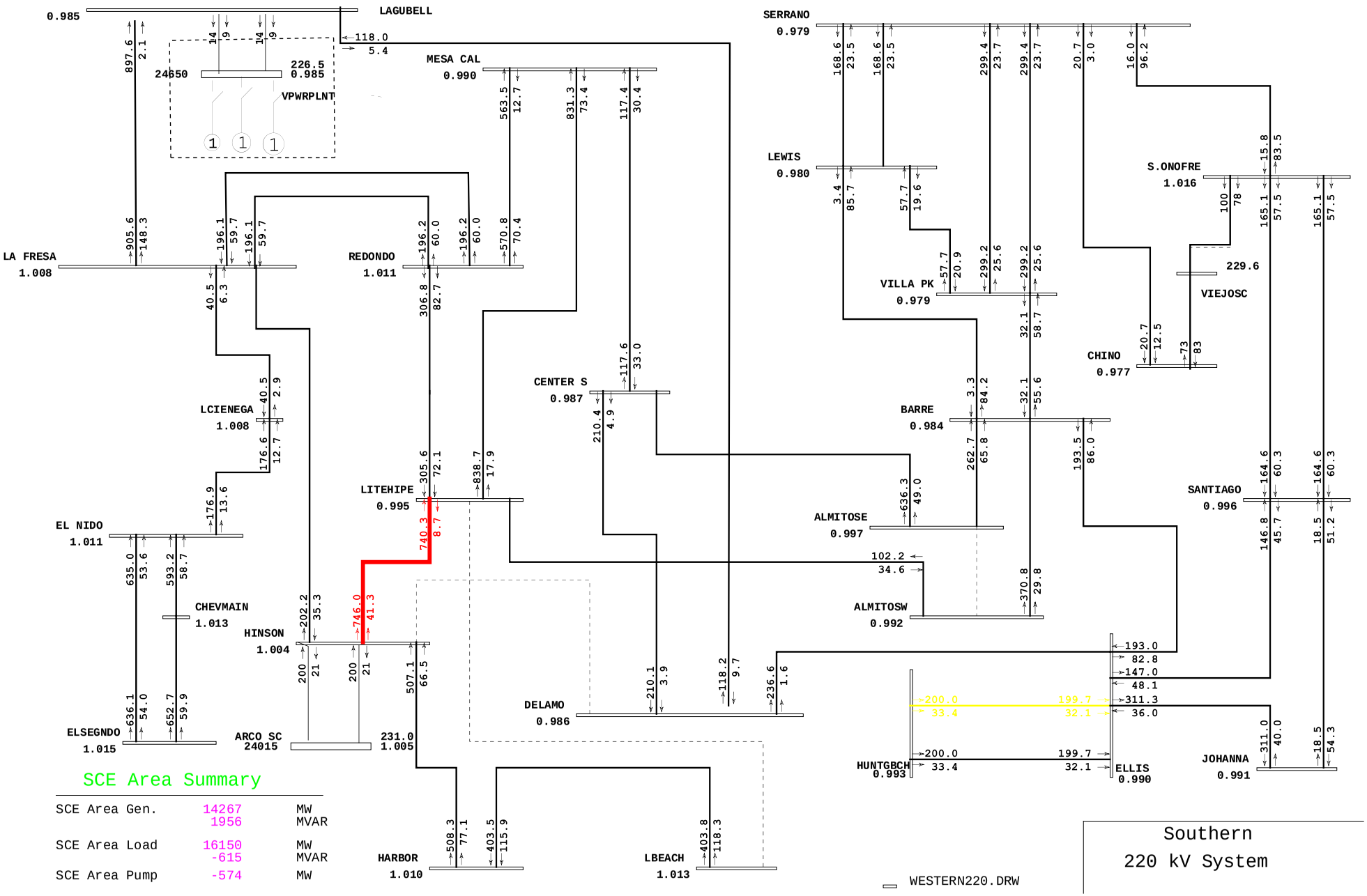

SCE Area Summary

SCE Area Gen.	14267	MW
	1956	MVAR
SCE Area Load	16150	MW
	-615	MVAR
SCE Area Pump	-574	MW

Southern
220 kV System

General Electric International, Inc. PSLF Program Sun Nov 12 15:13:38 2006 vpp610-wdatrestudy\2009lsp-pre-vpp-restudy.sav

2009 Light Spring - Vernon Power Project 610 MW
CASE NAME: 2009lsp-pre-vpp-restudy.sav
N-2: DEL AMO-HINSON AND LONG BEACH-LIGHTHIPE 230KV LINES

MW/MVAR
sce230-southern-post
Rating = 1

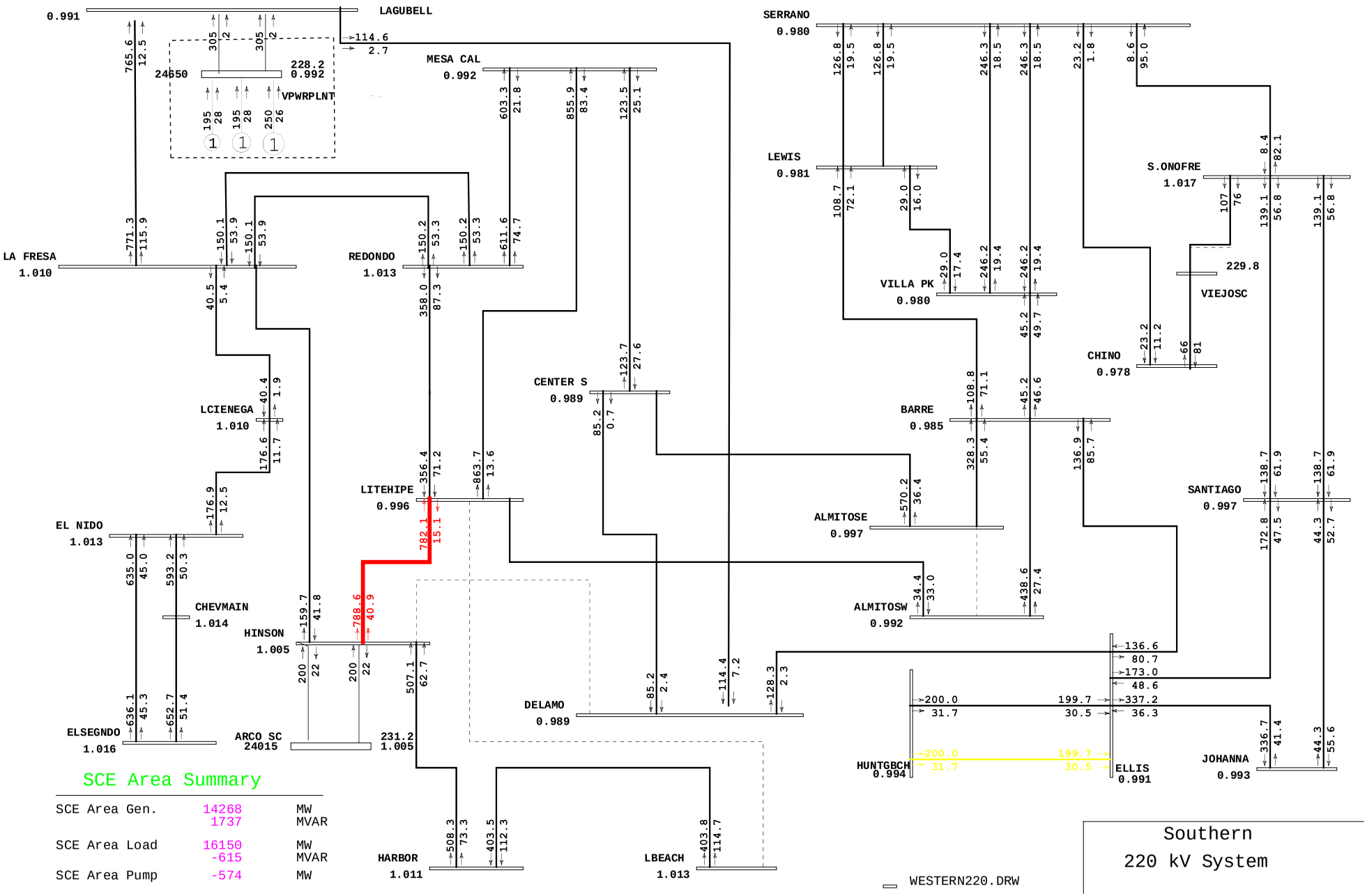

SCE Area Summary

SCE Area Gen.	14268	MW
	1737	MVAR
SCE Area Load	16150	MW
	-615	MVAR
SCE Area Pump	-574	MW

General Electric International, Inc. PSLF Program Sun Nov 12 15:04:03 2006 vpp610-wdatrestudy\2009lsp-post-vpp-restudy.sav

2009 Light Spring - Vernon Power Project 610 MW

CASE NAME: 2009lsp-post-vpp-restudy.sav

N-2: DEL AMO-HINSON AND LONG BEACH-LIGHTHIPE 230KV LINES

MW/MVAR

sce230-southern-post

Rating = 1

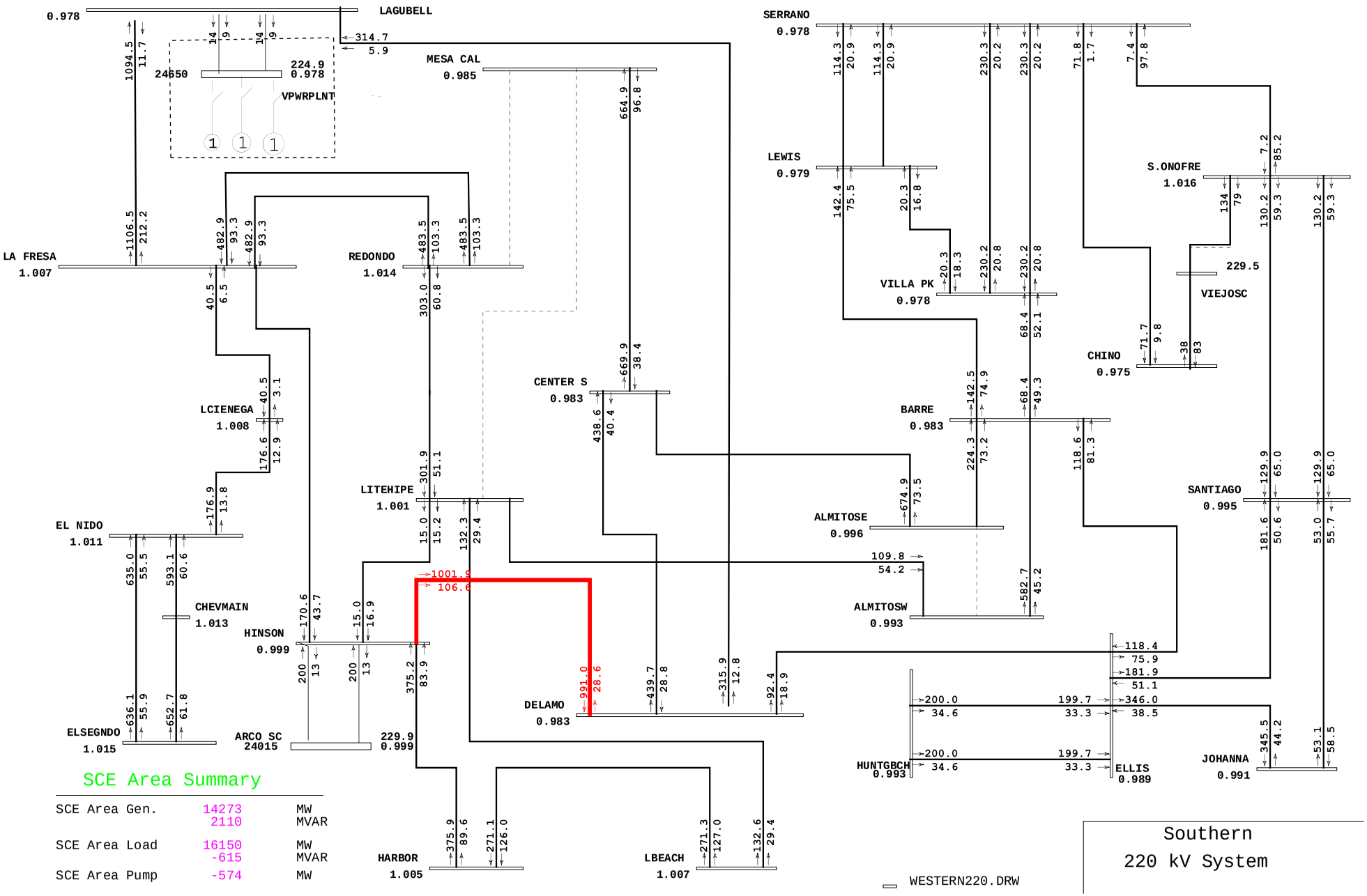

SCE Area Summary

SCE Area Gen.	14273	MW
	2110	MVAR
SCE Area Load	16150	MW
	-615	MVAR
SCE Area Pump	-574	MW

Southern
220 kV System

General Electric International, Inc. PSLF Program Sun Nov 12 15:18:11 2006 vpp610-wdatrestudy\2009lsp-pre-vpp-restudy.sav

2009 Light Spring - Vernon Power Project 610 MW
CASE NAME: 2009lsp-pre-vpp-restudy.sav
N-2: LIGHTHIPE-MESA AND MESA-REDONDO 230KV LINES

MW/MVAR
sce230-southern-post
Rating = 1

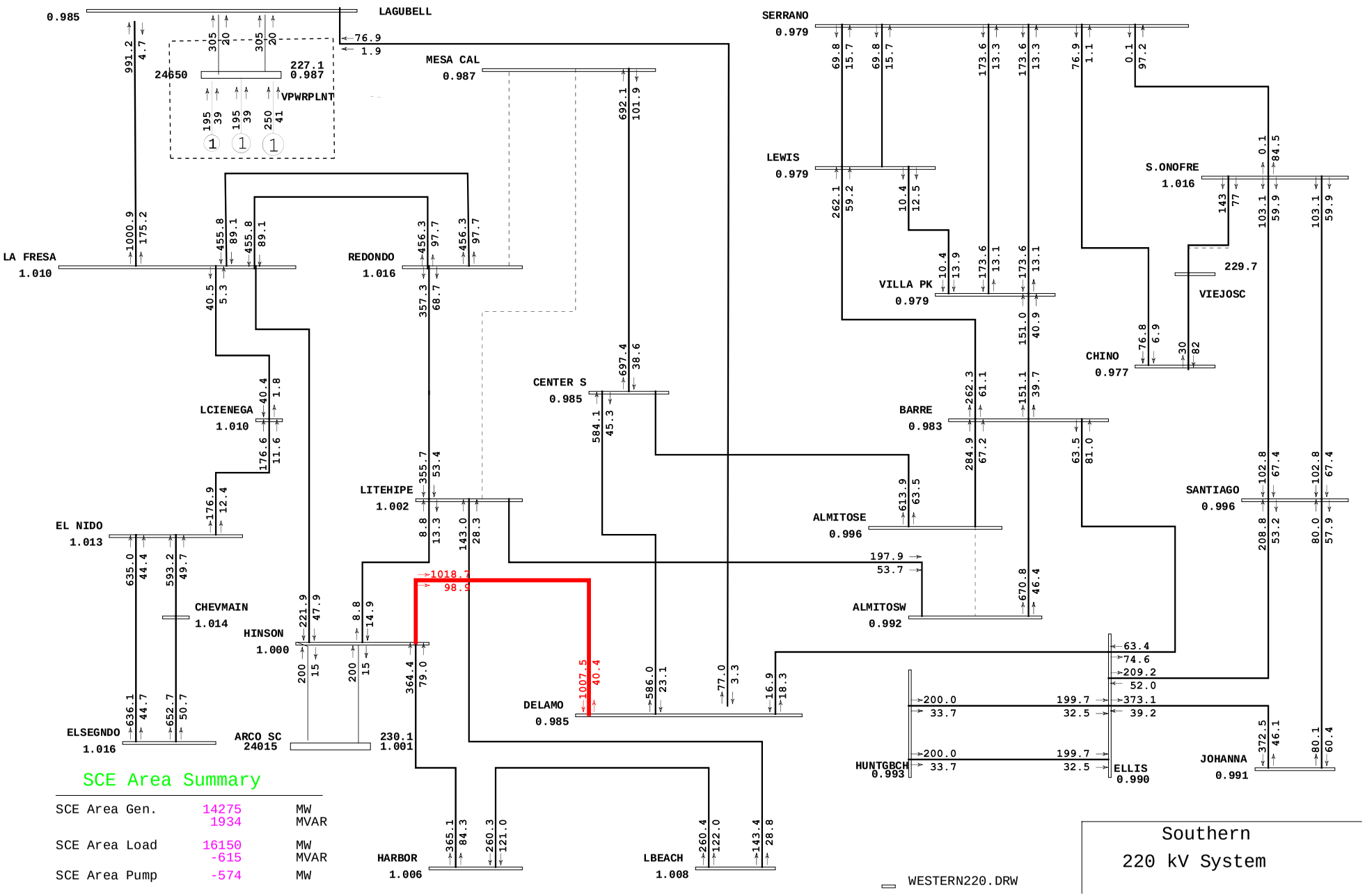

SCE Area Summary

SCE Area Gen.	14275	MW
	1934	MVAR
SCE Area Load	16150	MW
	-615	MVAR
SCE Area Pump	-574	MW

Southern
220 kV System

General Electric International, Inc. PSLF Program Sun Nov 12 14:51:33 2006 vpp610-wdatrestudy\2009lsp-post-vpp-restudy.sav

2009 Light Spring - Vernon Power Project 610 MW
CASE NAME: 2009lsp-post-vpp-restudy.sav
N-2: LIGHTHIPE-MESA AND MESA-REDONDO 230KV LINES

MW/MVAR
sce230-southern-post
Rating = 1