CH2M HILL
2485 Natomas Park Drive
Suite 600
Sacramento, CA 95833
Tel 916.920.0300
Fax 916.920.8463

CH2MHILL

DOCKET	
06-AFC-4	
DATE	SEP 08 2006
RECD.	SEP 08 2006

September 8, 2006

338307

Dr. James Reede
1516 Ninth Street
Sacramento, CA 95814-5512

Subject: Vernon Power Project (06-AFC-4)
Data Adequacy Supplement B

Dear Dr. Reede:

Please find attached the City of Vernon's Data Adequacy Supplement B. This supplement was prepared in response to the Staff's Data Adequacy Recommendation dated July 28, 2006. It is being submitted to fulfill the data adequacy deficiencies identified by staff. This supplement contains additional information on Air Quality and Transmission System Engineering.

To meet the filing requirements, 65 hard copies are being submitted to the Commission along with 85 CD copies. In addition to Data Adequacy Supplement B, the CD copies also contain the AFC and Data Adequacy Supplement A. Thus they will replace previous CDs provided to the Commission.

Please let me know if you need anything else.

Sincerely,

CH2M HILL

John L. Carrier, J.D.
Program Manager

VERNON POWER PLANT
DATA ADEQUACY SUPPLEMENT B
(06-AFC-4)

Submitted by:

City of Vernon

September 8, 2006

CH2MHILL

2485 Natomas Park Drive, Suite 600
Sacramento, California 95833-2937

Contents

Contents ..... **ii**
Section 1.0 Introduction **1**
Section 2.0 Data Adequacy Responses **2**
Section 2.1 Air Quality 3
Section 2.4 Transmission System Engineering 5

Section 1.0 Introduction

The City of Vernon (City) submitted an Application for Certification (AFC) for the Vernon Power Plant (VPP) to the California Energy Commission (CEC) for a nominal 914-megawatt (MW) net/943-MW (gross) combined-cycle natural gas-fired power plant on June 30, 2006. On August 25, 2006, The City of Vernon filed its Data Adequacy Supplement A in response to the Data Adequacy Worksheets provided by the Staff on July 28, 2006. Staff determined that additional information was still needed in the areas of Air Quality and Transmission System Engineering. This Data Adequacy Supplement B provide address those additional data needs.

Section 2.0 Data Adequacy Responses

The City is providing the data required for a data adequacy determination by the Commission based on the draft Data Adequacy Worksheets provided by CEC Staff.

Section 2.1 Air Quality

Data Adequacy Deficiency – Please identify specific locations and quantity of emission reduction credits (ERCs) that are earmarked for this project (as requested under Appendix B (g)(8)(J)(ii)).

Data Adequacy Response – The details of ERCs held by the Applicant were previously provided in Appendix 8.1E (Table 8.1E-3) of the Application for Certification (AFC). The Applicant has since finalized the procurement of additional VOC ERCs. The Applicant is therefore providing below (in Table AQ-2.1A) updated information relating to the ERCs held by the City of Vernon for the proposed Vernon Power Plant (VPP). It may be noted that some of the ERC certificate numbers provided in the AFC were old ERC certificate numbers (numbers assigned to previous owners). The Applicant has now obtained correct certificate numbers from the South Coast Air Quality Management District (SCAQMD). Both of these certificate numbers (provided in the AFC and the revised number obtained from the SCAQMD) are provided in Table AQ-2.1A. It may also be noted that the Applicant has now procured a total of 389 lbs/day of VOC ERCs. Thus, the City has to procure only an additional 7 lbs/day of VOC ERCs for the VPP.

The Applicant also made a request to the SCAQMD's Public Records Unit to provide specific location information for the ERCs listed in Table AQ-2.1A. The specific location information provided by the SCAQMD for the above ERCs is provided in Table AQ-2.1B.

The proposed Vernon Power Plant site is located in the "Coastal" area of the South Coast Air Basin (SCAB); thus, VPP can only use ERCs that originated in the "Coastal" area. Based on the information provided in Tables AQ-2.1A and B, it can be seen that all the CO and VOC ERCs procured by the Applicant for the VPP, originated in the Coastal area of the South Coast Air Basin.

TABLE AQ-2.1A
Details of ERCs held by the Applicant for the Vernon Power Plant

Pollutant	Certificate Number in AFC	Revised Certificate Number	ERC Quantity in AFC (lb/day)	Revised ERC Quantity (lb/day)	Originating Area in SCAB
CO	AQ005789	AQ005995	3	3	Coastal
VOC	AQ005991	AQ005992	50	50	Coastal
VOC	AQ005992	AQ006108	189	213	Coastal
VOC	AQ005993	AQ005993	73	73	Coastal
VOC	AQ005994	AQ005994	38	38	Coastal
VOC	AQ005999	AQ005999	15	15	Coastal

TABLE AQ-2.1B
Specific Location Information for the ERCs Procured for the Vernon Power Plant
(Data Provided by the SCAQMD)

Pollutant	Revised Certificate Number	Revised ERC Quantity, lbs/day	Original Source of ERC	Zone
CO	AQ005995	3	Union Chem – Division of Union Oil Co (Fac ID 800142) located at: 2601 E. Imperial Hwy, Brea, CA 92621	Coastal
VOC	AQ005992	50	Edgington Oil Co (Fac ID 800264) located at: 2400 E. Artesia Blvd, Long Beach, CA 90805	Coastal
VOC	AQ006108	213	Scope Products, Inc. (Fac ID 020203) located at: 9112 Graham Ave., Los Angeles, CA 90002	Coastal
VOC	AQ005993	73	Film Processing Corp. (Fac ID 043902) located at: 3602 Crenshaw Blvd, Los Angeles, CA 90016	Coastal
VOC	AQ005994	38	Scope Products, Inc. (Fac ID 020203) located at: 9112 Graham Ave., Los Angeles, CA 90002.	Coastal
VOC	AQ005999	15	Scope Products, Inc. (Fac ID 020203) located at: 9112 Graham Ave., Los Angeles, CA 90002.	Coastal

Section 2.4 Transmission System Engineering

Data Adequacy Deficiency – Provide a complete electrical one-line diagram of VPP switchyard showing all equipment for generators' interconnection with the switchyard including any bus duct connectors, 15 kV switchgear, disconnect switches, generator step-up transformers, breakers and their respective ratings. Appendix B(i)(2)(B).

Data Adequacy Response – For reference we have attached pre-project and post-project one-line drawings for two of the proposed configurations for Laguna Bell Substation.

Data Adequacy Deficiency – For expansion of Laguna Bell substation provide a description and the necessary drawings with termination breakers in an electrical one-line diagram. Appendix B(i)(2)(B).

Data Adequacy Response – Two electrical one-line diagrams are attached: (1) Drawing E001—Electrical key one-line diagram, and (2) Drawing SE002—230 kV GIS Switchyard Single Line Diagram. The information requested is shown on the attached one-line drawings. Please note that this is preliminary design information. Equipment used will be as indicated or equivalent depending on final plant design.

New breakers required for the VPP interconnection at the Laguna Bell substation, are planned to have same ratings as those used in the VPP 230 kV switchyard,

Data Adequacy Deficiency – The AFC is for 914 MW net generation output from the proposed Vernon Power Plant (VPP) with a target on-line date of third quarter of 2009. Two System Impact Studies (SIS), one for 610 MW output and the other for 890 MW output (stated as incomplete study), were submitted to the Commission and the studies were conducted under 2008 system conditions instead of 2009 system conditions. Appendix B(b)(2)(C).

In order to demonstrate conformance or non-conformance with the NERC/WSCC, California Independent System Operator (Cal-ISO) and/or Utility planning standards and reliability criteria, please submit a new System Impact study for the nominal 914 MW Vernon Power Plant (VPP) under 2009 summer peak and spring system conditions as follows:

a. List all major study assumptions in the base cases including imports and exports to the system, major Path flows (such as EOR, SCIT etc.), major generations including queue generation projects and hydro, loads in the area systems.

Data Adequacy Response – To provide all the data that is reasonably available on area interchange, path flows and generation, we have attached area interchange, path flow, and generation reports from the pre and post VPP case as Attachment TSE-2.4D. Key assumptions extracted from these reports are as follows:

Summary of Important Area Interchanges

The area interchanges for LADWP and SCE for the 2009 Heavy Summer and 2010 Light Spring scenarios are provided as follows:

	Pre-Project (MW) Area Export	Post-Project (MW) Area Export
LADWP		
2009 Heavy Summer	-2918.3	-2987.0
2010 Light Spring	-2023.9	-2083.8
SCE		
2009 Heavy Summer	-3379.2	-2869.7
2010 Light Spring	1392.6	1825.0

Summary of Major Interface Flows

Key interface flows are as follows

	Pre-Project (MW) Flow	Post-Project (MW) Flow
2009 Heavy Summer		
WOR	5078.1	5048.8
EOR	3400.7	3364.9
SCIT	8410.0	8003.2
2010 Light Spring		
WOR	4584.7	4547.0
EOR	3662.7	3619.6
SCIT	1820.3	1432.5

Summary of Major Generation

The generation assumptions are discussed in detail in the Study plan. A complete list of ISO queued generation is attached to the study plan. The attached reports show the generation status and level for all of the generators in the SCE area. Mr. Guha expressed a particular interest in San Onofre. Generation for San Onofre is as follows:

	Pre-Project (MW)	Post-Project (MW)
2009 Heavy Summer	2169.9	2127.1
2010 Light Spring	2182.2	2131.6

Pre- and Post-project One-line Diagrams

SOUTHERN CALIFORNIA EDISON
LAGUNA BELL 230KV

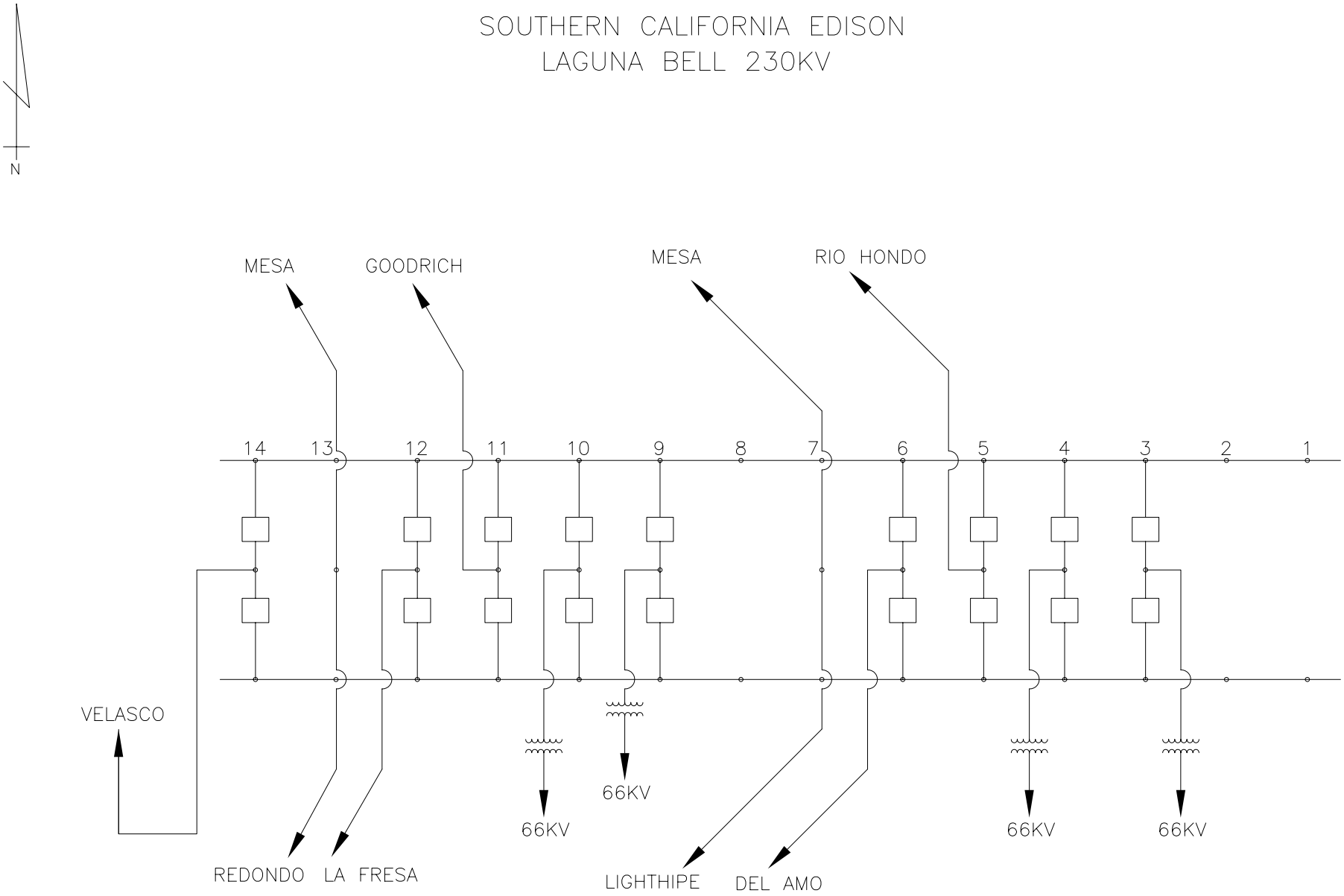

Commonwealth Associates Inc.
Jackson, Michigan
engineers consultants construction management

PREPARED FOR
CITY OF VERNON

7/10/06

SOUTHERN CALIFORNIA EDISON
LAGUNA BELL 230KV
MINIMUM MODIFICATIONS FOR VPP

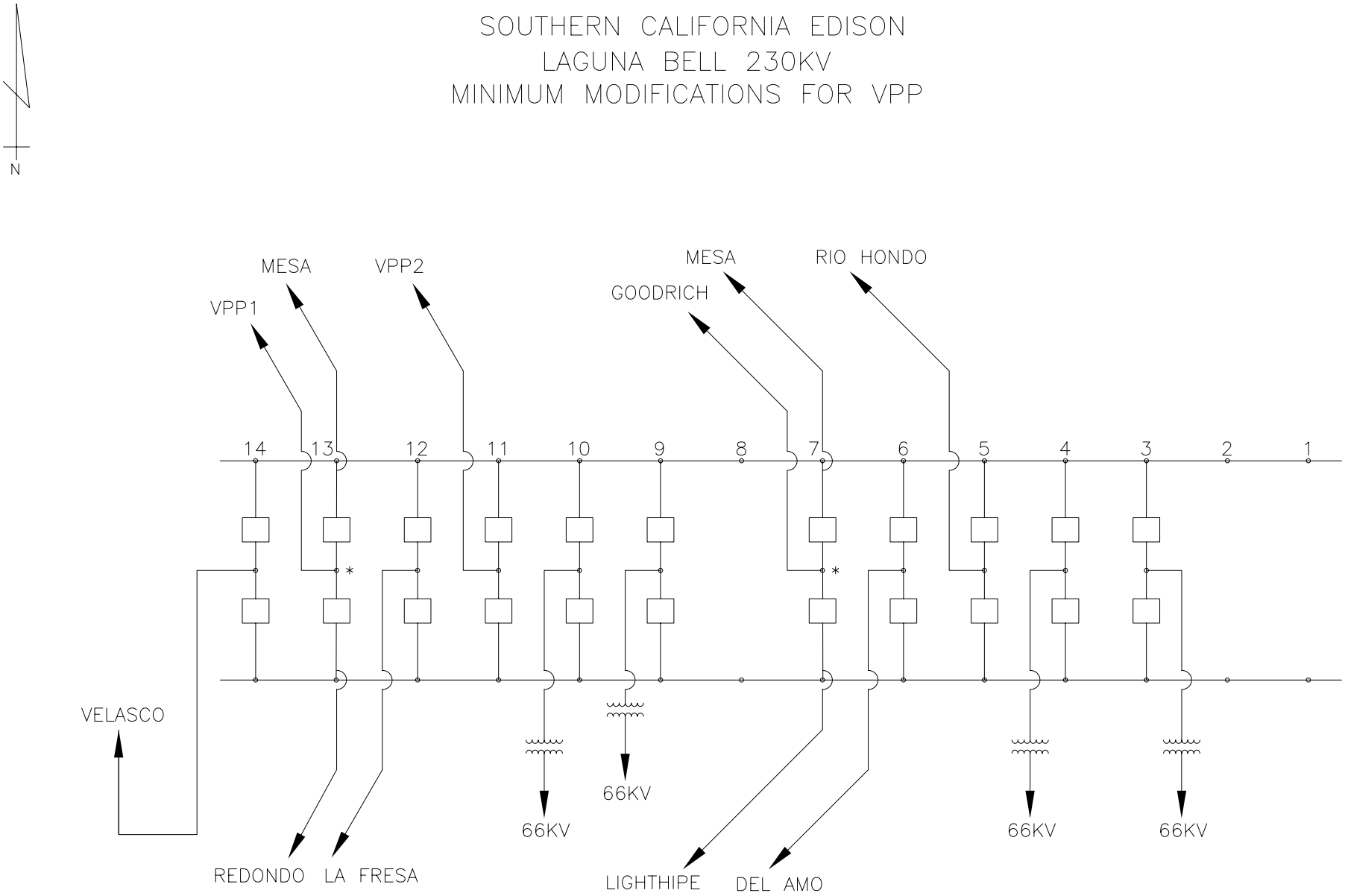

* DETACH AND RAISE MESA TO REDONDO

* DETACH AND RAISE MESA TO LIGHTHIPE

Commonwealth Associates Inc.
Jackson, Michigan
engineers consultants construction management

PREPARED FOR
CITY OF VERNON

7/10/06

SOUTHERN CALIFORNIA EDISON
LAGUNA BELL 230KV
SCE INTERCONNECTION PROPOSAL

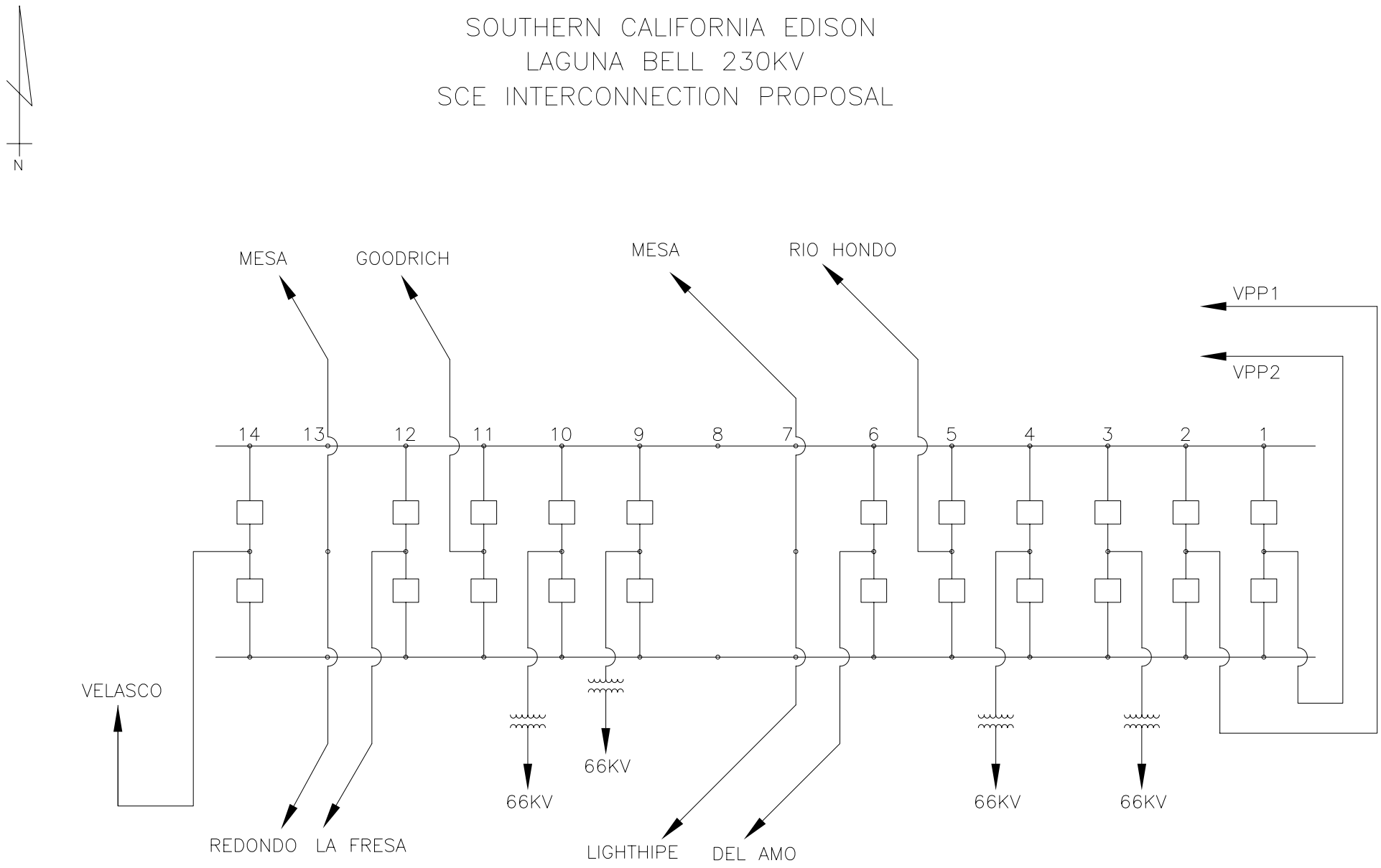

Commonwealth Associates Inc.
Jackson, Michigan
engineers consultants construction management

PREPARED FOR
CITY OF VERNON

7/10/06

Electrical One-line Diagrams

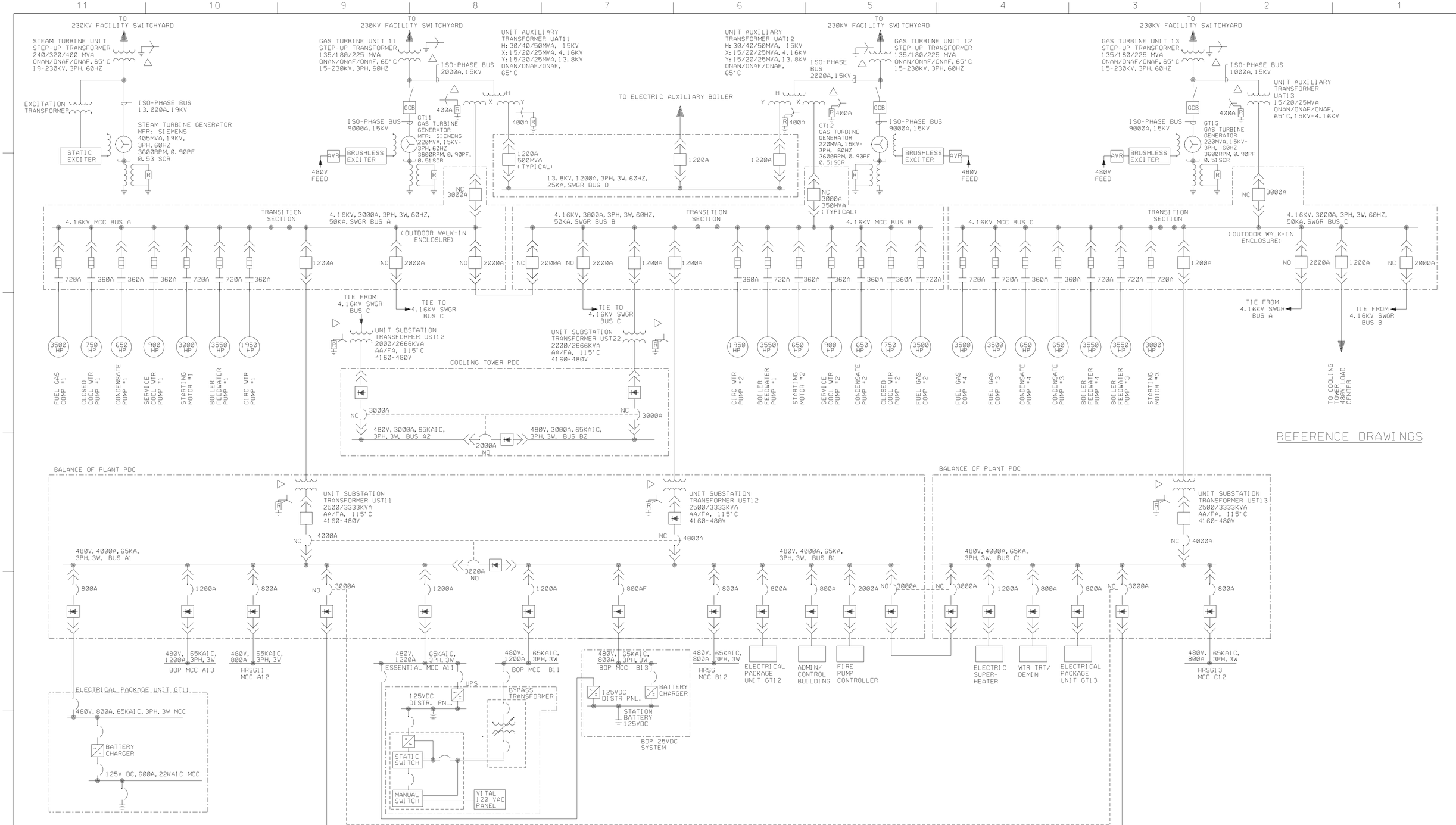

Rev No	Revision	Date	Dwn	Chkd	Approved Chief Engr	Rev No	Revision	Date	Dwn	Chkd	Approved Chief Engr	Rev No	Revision	Date	Dwn	Chkd	Approved Chief Engr

Drawing Control				
Purpose	Approved By	Date	Released By	Date
For Information				
For Comment				
For Bid				
For Fabrication				
For Construction				

Engineering Review		
Disc	Engr	Date
Mech		
Elec		
Civil		
Arch		
Instr		
Drawn CJB	Designed RS	Checked
Lead Engineer	Date	
	Scale NONE	

VERNON POWER PLANT
CITY OF VERNON
VERNON, CA

ELECTRICAL
KEY ONE LINE DIAGRAM

BURNS AND ROE ENTERPRISES, INC.
Engineers and Constructors - Oradell, NJ

Approved for Construction	Work Order	Drawing No	Sh	Rev
Chief ELECTRICALEngineer	2731	E001		C

STATUS: 8/03/06

...\pw_bre2005\dms03050\E001a.dgn 08/03/2006 02:50:05 PM

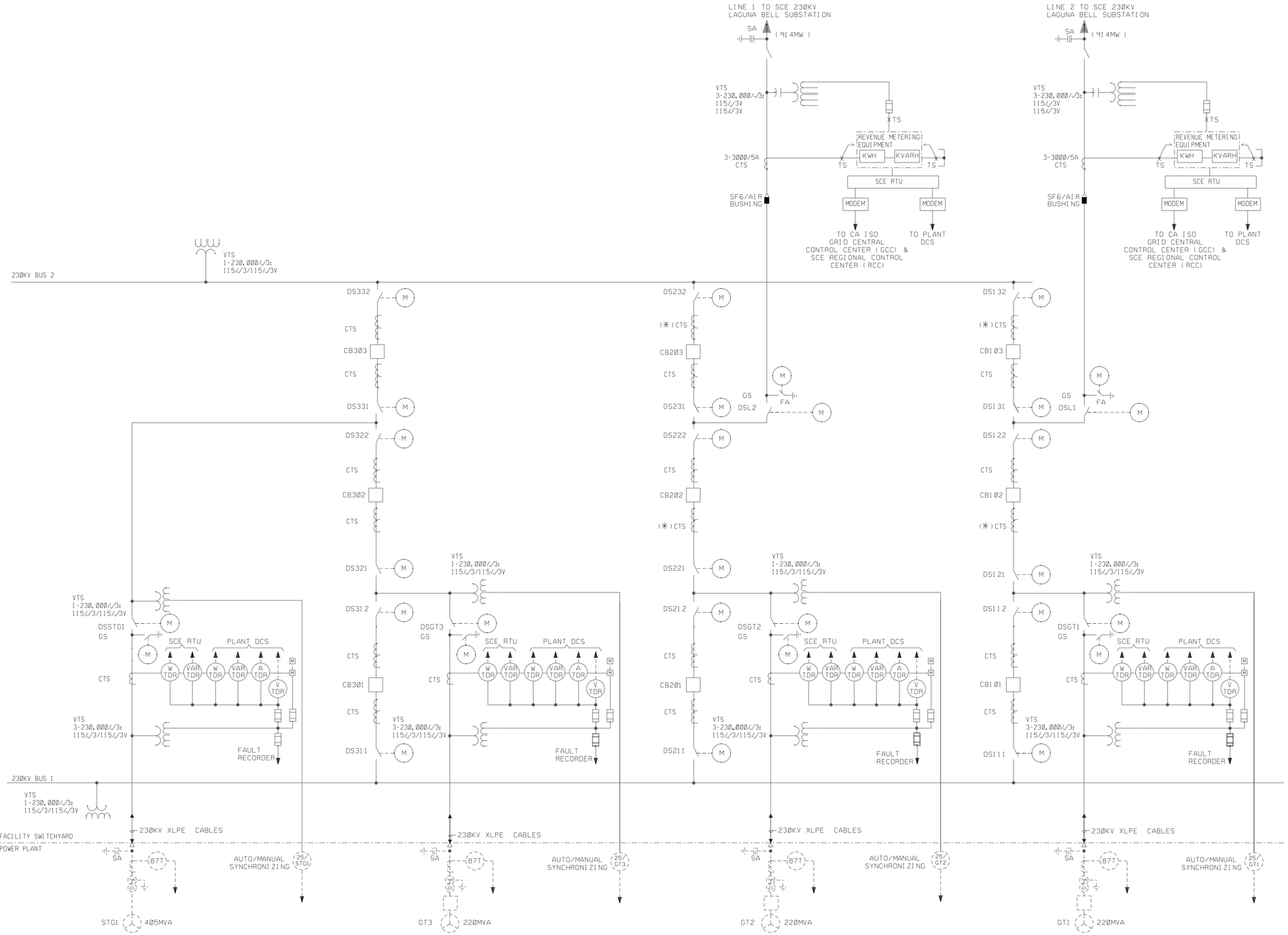

NOTES

1. THE ENTIRE GIS EQUIPMENT SUPPLY SHALL HAVE THE FOLLOWING RATINGS: BIL 1050KV, 60HZ, 230KV NOMINAL. 63KA INTERRUPTING, 3000A CONTINUOUS CURRENT CAPACITY, TWO TRIP COILS PER GIS CB.
2. ALL DEVICES SHOWN ARE FOR THREE PHASE UTILIZATION UNLESS OTHERWISE SPECIFIED.
3. EQUIPMENT NUMBERING SYSTEM SHOWN ON THIS DRAWING IS TYPICAL FOR GIS SWITCHYARD. FINAL NUMBERING SYSTEM WILL BE REVIEWED BY OWNER..
4. GIS VOLTAGE TRANSFORMERS ARE RATED (PER PHASE) 230KV:√3/115V:√3 /115V:√3, 100VA, CL3P, 100VA, CL 0.5.
5. ALL CT'S FOR RELAYING SHALL BE RATED: 3-3000/1-1000/1 UNLESS OTHERWISE SPECIFIED. CT'S MARKED (*) SHALL BE ANSI MULTIRATIO: 3-2000/5 WITH C-800 CLASS AT 1000/5 RATIO.
6. REVENUE METERING, INCLUDING COMMUNICATION EQUIPMENT SHALL BE IN ACCORDANCE WITH CALIFORNIA ISO REQUIREMENTS.
7. PROTECTIVE RELAYING INCLUDING SCADA EQUIPMENT SHALL BE IN ACCORDANCE WITH THE REQUIREMENTS SPECIFIED IN SOUTHERN CALIFORNIA EDISON COMPANY (SCE) INTERCONNECTION HANDBOOK.

REFERENCE DOCUMENTS

1. INTERCONNECTION HANDBOOK, WHOLESALE GENERATORS, DATED 8/17/2005 SOUTHERN CALIFORNIA EDISON COMPANY
2. CALIFORNIA ISO GENERATOR INTERCONNECTION MANUAL, REVISION 1.2092704.JK

LEGEND

M	MOTORIZED TYPE GROUNDING SWITCH
M	MAINTENANCE ISOLATION SWITCH
M FA	FAST ACTING GROUNDING SWITCH
■	SF6 TO AIR BRUSHING
▲ ▼	230KV CABLE TERMINATOR
6	GAS INSULATED CB
25	SYNCHRONIZING OR SYNCHRONISM CHECK
27	UNDER-VOLTAGE
47	VOLTAGE PHASE SEQUENCE
51	TIME OVER-CURRENT
51G	GROUND TIME OVER-CURRENT
51N	NEUTRAL TIME OVER-CURRENT
51V	VOLTAGE RESTRAINED/CONTROLLED TIME OVER-CURRENT
59	OVER-VOLTAGE
59G	OVER-VOLTAGE TYPE GROUND DETECTOR
67V	VOLTAGE RESTRAINED/CONTROLLED DIRECTIONAL TIME OVER-CURRENT
78	LOSS OF SYNCHRONISM (OUT-OF-STEP)
79	RECLOSING RELAY
81O	OVER-FREQUENCY
81U	UNDER-FREQUENCY
87	CURRENT DIFFERENTIAL

Rev No	Revision	Date	Dwn	Chkd	Approved Chief Engr	Rev No	Revision	Date	Dwn	Chkd	Approved Chief Engr	Rev No	Revision	Date	Dwn	Chkd	Approved Chief Engr

Drawing Control

Purpose	Approved By	Date	Released By	Date
For Information				
For Comment				
For Bid				
For Fabrication				
For Construction				

Engineering Review

Disc	Engr	Date
Mech		
Elec		
Civil		
Arch		
Instr		

Drawn	Designed	Checked
CJB	RS	

Lead Engineer | Date | Scale NONE

Approved for Construction | Chief ELECTRICAL Engineer

VERNON POWER PLANT

CITY OF VERNON
VERNON, CA

230KV GIS SWITCHYARD SINGLE LINE DIAGRAM

BURNS AND ROE ENTERPRISES, INC.
Engineers and Constructors - Oradell, NJ

Work Order	Drawing No	Sh	Rev
2731	SE002		E

STATUS: 08/03/06

...\pw_bre2005\dms03050\SE002B.dgn 08/03/2006 03:33:57 PM

Attachment TSE-2.4D
Supplemental Data for CAI's Discussion of the Impacts of VPP's 914 MW Addition

Area Interchange Reports

GENERAL ELECTRIC INTERNATIONAL, INC. - PSLF - V15.1
2009 Heavy Summer - Pre Case
CASE NAME: Vpp09hsBaseCase914.sav

		generation capacity	generation on-line	load categories power	load categories current	load categories imped.	shunt	-- svd --	net inter	losses	slack bus
area name		IID									
	mw	1460.4	1179.4	541.3	0.0	0.0	0.0	0.0	606.3	31.7	58.1
8	mvar	562.1	100.4	308.4	0.0	0.0	-250.6	0.0	-42.6	85.1	25.0
area name		NEW MEXICO									
	mw	4408.2	2042.2	2705.0	0.0	0.0	0.0	0.0	-816.5	153.7	91.7
10	mvar	2528.0	161.4	748.8	0.0	0.0	-691.6	0.0	102.9	1.4	10.6
area name		ARIZONA									
	mw	23691.6	15550.0	13120.8	0.0	0.0	0.0	0.0	2112.4	316.8	-2.9
14	mvar	12668.5	2015.3	2604.6	0.0	0.0	-588.6	-9.4	-1564.7	1573.3	-3.1
area name		NEVADA									
	mw	6752.6	3802.8	3586.4	0.0	0.0	0.0	0.0	174.6	41.7	55.8
18	mvar	3823.2	273.1	670.5	0.0	0.0	-215.2	0.0	-245.5	63.3	20.3
area name		WAPA L.C.									
	mw	6510.0	2908.1	156.3	0.0	0.0	0.0	0.0	2627.7	124.1	73.1
19	mvar	2305.7	207.1	53.7	0.0	0.0	49.4	0.0	97.9	6.2	2.6
area name		MEXICO-CFE									
	mw	3049.0	1450.0	1315.4	0.0	0.0	0.0	0.0	111.0	23.6	211.0
20	mvar	1137.0	77.4	295.3	0.0	0.0	-128.2	0.0	-41.1	-48.5	93.0
area name		SANDIEGO									
	mw	3386.2	2549.9	4819.3	0.0	0.0	0.0	0.0	-2378.0	108.7	286.7
22	mvar	1669.2	424.1	613.3	0.0	0.0	115.8	-984.8	-188.1	868.0	150.3
area name		SOCALIF									
	mw	35776.5	21788.7	24776.3	0.0	0.0	0.0	0.0	-3379.2	391.6	337.0
24	mvar	14909.1	1872.5	-2625.8	0.0	0.0	-1321.2	-298.9	2350.3	3768.1	95.2
area name		LADWP									
	mw	4804.1	3833.9	6430.4	0.0	0.0	0.0	0.0	-2918.3	321.7	106.0
26	mvar	2714.2	1004.0	1075.7	0.0	0.0	-2508.9	0.0	480.3	1957.0	-0.5
area name		PG AND E									
	mw	31686.4	21764.4	23278.2	0.0	0.0	0.0	0.0	-2536.4	1022.6	448.7
30	mvar	16873.9	5419.8	4726.8	0.0	-14.3	-2158.6	-1035.4	-3.1	3904.3	163.6
area name		NORTHWEST									
	mw	43303.4	29559.5	24888.7	0.0	0.0	0.0	0.0	3706.5	962.8	139.2
40	mvar	16318.8	1065.4	6590.0	0.0	0.0	-1398.6	-5037.7	532.4	379.3	8.2
area name		B.C.HYDRO									
	mw	12722.0	9000.5	7927.6	0.0	0.0	0.0	0.0	552.1	520.9	226.9
50	mvar	6456.1	288.7	2999.1	0.0	0.0	2772.5	1191.2	-12.5	-6661.6	2.4

GENERAL ELECTRIC INTERNATIONAL, INC. - PSLF - V15.1
2009 Heavy Summer - Pre Case
CASE NAME: Vpp09hsBaseCase914.sav

		generation capacity	generation on-line	load categories power	load categories current	load categories imped.	shunt	-- svd --	net inter	losses	slack bus
area name		AQUILA									
	mw	911.5	648.6	675.8	0.0	0.0	0.0	0.0	-43.8	16.6	99.3
52	mvar	410.8	-17.8	157.9	0.0	0.0	-52.4	-124.5	-121.6	122.8	-1.0
area name		ALBERTA									
	mw	11320.9	8088.0	7660.2	0.0	0.0	0.0	0.0	-0.7	428.4	9.3
54	mvar	5197.7	1476.5	2708.1	0.0	0.0	-7.9	-1575.5	-91.4	443.3	45.3
area name		IDAHO									
	mw	4579.4	3558.0	2570.2	0.0	0.0	0.0	0.0	729.1	258.7	211.6
60	mvar	2171.0	1061.6	458.9	0.0	0.0	-131.5	0.0	-462.9	1197.2	44.8
area name		MONTANA									
	mw	3257.5	3018.7	1605.4	0.0	0.0	1.3	0.0	1306.3	105.7	792.7
62	mvar	1186.5	279.7	470.5	0.0	0.0	-142.0	37.1	-465.7	379.8	106.7
area name		WAPA U.M.									
	mw	61.8	41.2	-48.5	0.0	0.0	0.0	0.0	84.8	4.9	41.2
63	mvar	34.0	2.1	100.5	0.0	0.0	-78.9	20.8	22.8	-63.1	2.1

```
area name  SIERRA
     mw    1901.7   1098.2    1505.2      0.0      0.0      0.0      0.0   -471.8     64.7    81.2
  64 mvar   925.4    137.6     198.9      0.0      0.0    -22.7     73.3     -6.4   -105.5    16.3

area name  PACE
     mw    6361.5   4762.2    5338.0      0.0      0.0      0.0      0.0   -825.4    249.6   101.2
  65 mvar  3296.9    721.3    1714.6      0.0      0.0  -1208.9   -270.1     54.2    431.5    -3.0

area name  PSCOLORADO
     mw    6307.0   4754.0    4824.9      0.0      0.0      0.0      0.0   -186.6    115.7    80.0
  70 mvar  3963.3    735.9    1192.4      0.0      0.0      0.0   -985.4    486.7     42.3    34.5

area name  WAPA R.M.
     mw    7092.2   5001.4    3260.4      0.0      0.0      0.0      0.0   1545.7    195.2   578.0
  73 mvar  3022.8    498.5    1568.5      0.0      0.0   -375.5   -183.1   -881.7    370.3    28.5

TOTL mw  219344.0 146399.7  140937.4      0.0      0.0      1.3      0.0     -0.0   5459.4
     mvar102174.1  17804.7   26630.8      0.0    -14.3  -8343.7  -9182.3     -0.0   8714.3
 GENERAL ELECTRIC INTERNATIONAL, INC. - PSLF - V15.1
2009 Heavy Summer - Pre Case
CASE NAME: Vpp09hsBaseCase914.sav

 Area  Interchange  Summary

 FROM AREA    8 IID                                  mw        mvar
   TO AREA   14 ARIZONA                             201.2       -8.7
   TO AREA   19 WAPA L.C.                           100.0      -25.0
   TO AREA   22 SANDIEGO                             -2.8        5.0
   TO AREA   24 SOCALIF                             307.9      -13.8
   TOTAL                                            606.3      -42.6

 FROM AREA   10 NEW MEXICO                           mw        mvar
   TO AREA   14 ARIZONA                            -462.8     -110.3
   TO AREA   19 WAPA L.C.                            34.7       16.8
   TO AREA   73 WAPA R.M.                          -388.4      196.4
   TOTAL                                           -816.5      102.9

 FROM AREA   14 ARIZONA                              mw        mvar
   TO AREA    8 IID                                -201.2        8.7
   TO AREA   10 NEW MEXICO                          462.8      110.3
   TO AREA   19 WAPA L.C.                            41.6     -335.6
   TO AREA   22 SANDIEGO                            509.5       48.4
   TO AREA   24 SOCALIF                             802.6    -1125.4
   TO AREA   26 LADWP                               539.5     -192.9
   TO AREA   65 PACE                                -42.4      -78.4
   TOTAL                                           2112.4    -1564.7

 FROM AREA   18 NEVADA                               mw        mvar
   TO AREA   19 WAPA L.C.                          -400.8      -68.1
   TO AREA   24 SOCALIF                             495.9     -224.7
   TO AREA   26 LADWP                                82.5       25.7
   TO AREA   65 PACE                                 -3.0       21.5
   TOTAL                                            174.6     -245.5

 FROM AREA   19 WAPA L.C.                            mw        mvar
   TO AREA    8 IID                                -100.0       25.0
   TO AREA   10 NEW MEXICO                          -34.7      -16.8
   TO AREA   14 ARIZONA                             -41.6      335.6
   TO AREA   18 NEVADA                              400.8       68.1
   TO AREA   24 SOCALIF                            1269.9      -88.1
   TO AREA   26 LADWP                              1449.3     -301.8
   TO AREA   65 PACE                                -86.2      -22.1
   TO AREA   73 WAPA R.M.                          -229.8       98.0
   TOTAL                                           2627.7       97.9

 FROM AREA   20 MEXICO-CFE                           mw        mvar
   TO AREA   22 SANDIEGO                            111.0      -41.1
   TOTAL                                            111.0      -41.1

 FROM AREA   22 SANDIEGO                             mw        mvar
   TO AREA    8 IID                                  2.8       -5.0
   TO AREA   14 ARIZONA                            -509.5      -48.4
   TO AREA   20 MEXICO-CFE                         -111.0       41.1
   TO AREA   24 SOCALIF                           -1760.4     -175.9
   TOTAL                                          -2378.0     -188.1

 FROM AREA   24 SOCALIF                              mw        mvar
   TO AREA    8 IID                                -307.9       13.8
   TO AREA   14 ARIZONA                            -802.6     1125.4
   TO AREA   18 NEVADA                             -495.9      224.7
   TO AREA   19 WAPA L.C.                         -1269.9       88.1
```

```
   TO AREA   22 SANDIEGO                          1760.4      175.9
   TO AREA   26 LADWP                            -1611.3      199.6
   TO AREA   30 PG AND E                          -639.1      519.3
```



```
   TO AREA   64 SIERRA                            -12.8        3.5
   TOTAL                                       -3379.2     2350.3

 FROM AREA   26 LADWP                              mw        mvar
   TO AREA   14 ARIZONA                          -539.5      192.9
   TO AREA   18 NEVADA                            -82.5      -25.7
   TO AREA   19 WAPA L.C.                      -1449.3      301.8
   TO AREA   24 SOCALIF                         1611.3     -199.6
   TO AREA   40 NORTHWEST                      -2334.2        0.0
   TO AREA   64 SIERRA                            59.2        4.2
   TO AREA   65 PACE                            -183.1      206.7
   TOTAL                                       -2918.3      480.3

 FROM AREA   30 PG AND E                           mw        mvar
   TO AREA   24 SOCALIF                          639.1     -519.3
   TO AREA   40 NORTHWEST                      -3179.8      476.1
   TO AREA   64 SIERRA                             4.3       40.2
   TOTAL                                       -2536.4       -3.1

 FROM AREA   40 NORTHWEST                          mw        mvar
   TO AREA   26 LADWP                           2334.2        0.0
   TO AREA   30 PG AND E                        3179.8     -476.1
   TO AREA   50 B.C.HYDRO                       -360.5      186.5
   TO AREA   52 AQUILA                          -147.1       39.0
   TO AREA   60 IDAHO                            -95.4      401.3
   TO AREA   62 MONTANA                        -1207.2      410.7
   TO AREA   64 SIERRA                             2.7      -29.1
   TOTAL                                        3706.5      532.4

 FROM AREA   50 B.C.HYDRO                          mw        mvar
   TO AREA   40 NORTHWEST                        360.5     -186.5
   TO AREA   52 AQUILA                           190.9       82.6
   TO AREA   54 ALBERTA                            0.7       91.4
   TOTAL                                         552.1      -12.5

 FROM AREA   52 AQUILA                            mw        mvar
   TO AREA   40 NORTHWEST                        147.1      -39.0
   TO AREA   50 B.C.HYDRO                       -190.9      -82.6
   TOTAL                                         -43.8     -121.6

 FROM AREA   54 ALBERTA                           mw        mvar
   TO AREA   50 B.C.HYDRO                         -0.7      -91.4
   TOTAL                                          -0.7      -91.4

 FROM AREA   60 IDAHO                             mw        mvar
   TO AREA   40 NORTHWEST                         95.4     -401.3
   TO AREA   64 SIERRA                           364.2      -29.1
   TO AREA   65 PACE                             269.5      -32.5
   TOTAL                                         729.1     -462.9

 FROM AREA   62 MONTANA                           mw        mvar
   TO AREA   40 NORTHWEST                       1207.2     -410.7
   TO AREA   63 WAPA U.M.                        -42.4      -22.0
   TO AREA   65 PACE                             141.5      -32.9
   TOTAL                                        1306.3     -465.7

 FROM AREA   63 WAPA U.M.                         mw        mvar
   TO AREA   62 MONTANA                           42.4       22.0
   TO AREA   73 WAPA R.M.                         42.5        0.8
   TOTAL                                          84.8       22.8

 FROM AREA   64 SIERRA                            mw        mvar
```



```
   TO AREA   24 SOCALIF                           12.8       -3.5
   TO AREA   26 LADWP                            -59.2       -4.2
   TO AREA   30 PG AND E                          -4.3      -40.2
   TO AREA   40 NORTHWEST                         -2.7       29.1
   TO AREA   60 IDAHO                           -364.2       29.1
   TO AREA   65 PACE                             -54.2      -16.7
   TOTAL                                        -471.8       -6.4

 FROM AREA   65 PACE                              mw        mvar
```

TO AREA	14	ARIZONA	42.4	78.4
TO AREA	18	NEVADA	3.0	-21.5
TO AREA	19	WAPA L.C.	86.2	22.1
TO AREA	26	LADWP	183.1	-206.7
TO AREA	60	IDAHO	-269.5	32.5
TO AREA	62	MONTANA	-141.5	32.9
TO AREA	64	SIERRA	54.2	16.7
TO AREA	73	WAPA R.M.	-783.4	99.8
TOTAL			-825.4	54.2

FROM AREA	70	PSCOLORADO	mw	mvar
TO AREA	73	WAPA R.M.	-186.6	486.7
TOTAL			-186.6	486.7

FROM AREA	73	WAPA R.M.	mw	mvar
TO AREA	10	NEW MEXICO	388.4	-196.4
TO AREA	19	WAPA L.C.	229.8	-98.0
TO AREA	63	WAPA U.M.	-42.5	-0.8
TO AREA	65	PACE	783.4	-99.8
TO AREA	70	PSCOLORADO	186.6	-486.7
TOTAL			1545.7	-881.7

GENERAL ELECTRIC INTERNATIONAL, INC. - PSLF - V15.1
2009 Heavy Summer - Vernon Power Plant 914 MW
CASE NAME: Vpp09hsPost914.sav

	generation capacity	generation on-line	load categories power	load categories current	load categories imped.	shunt	-- svd --	net inter	losses	slack bus
area name IID										
mw	1460.4	1179.4	541.3	0.0	0.0	0.0	0.0	606.5	31.6	58.1
8 mvar	562.1	99.2	308.4	0.0	0.0	-250.7	0.0	-42.7	84.1	25.0
area name NEW MEXICO										
mw	4408.2	2042.2	2705.0	0.0	0.0	0.0	0.0	-816.3	153.5	91.7
10 mvar	2528.0	140.4	748.8	0.0	0.0	-692.0	0.0	84.1	-0.5	10.5
area name ARIZONA										
mw	23691.6	15549.1	13120.8	0.0	0.0	0.0	0.0	2113.1	315.2	-3.8
14 mvar	12668.5	1985.7	2604.6	0.0	0.0	-588.9	-9.4	-1575.8	1555.2	-3.2
area name NEVADA										
mw	6752.6	3802.8	3586.4	0.0	0.0	0.0	0.0	174.6	41.8	55.8
18 mvar	3823.2	259.6	670.5	0.0	0.0	-215.3	0.0	-258.8	63.3	20.1
area name WAPA L.C.										
mw	6510.0	2906.6	156.3	0.0	0.0	0.0	0.0	2627.6	122.7	71.6
19 mvar	2305.7	193.8	53.7	0.0	0.0	49.4	0.0	94.1	-3.4	2.1
area name MEXICO-CFE										
mw	3049.0	1450.3	1315.4	0.0	0.0	0.0	0.0	111.1	23.7	211.3
20 mvar	1137.0	79.9	295.3	0.0	0.0	-128.2	0.0	-39.7	-47.5	93.0
area name SANDIEGO										
mw	3386.2	2500.7	4819.3	0.0	0.0	0.0	0.0	-2428.3	109.7	287.4
22 mvar	1669.2	428.6	613.3	0.0	0.0	115.8	-984.1	-197.5	881.2	151.9
area name SOCALIF										
mw	35776.5	22315.0	24806.3	0.0	0.0	0.0	0.0	-2869.7	378.4	348.0
24 mvar	14909.1	1804.3	-2607.2	0.0	0.0	-1324.8	-299.9	2398.1	3638.1	95.3
area name LADWP										
mw	4804.1	3764.3	6430.4	0.0	0.0	0.0	0.0	-2987.0	320.9	103.6
26 mvar	2714.2	984.2	1075.7	0.0	0.0	-2514.6	0.0	489.0	1934.2	-2.0
area name PG AND E										
mw	31686.4	21385.4	23278.2	0.0	0.0	0.0	0.0	-2929.8	1037.1	455.1
30 mvar	16873.9	5537.2	4726.8	0.0	-14.3	-2148.4	-1031.4	-32.6	4037.1	170.3
area name NORTHWEST										
mw	43303.4	29560.5	24888.7	0.0	0.0	0.0	0.0	3706.7	963.6	140.2
40 mvar	16318.8	1087.4	6590.0	0.0	0.0	-1398.6	-5037.7	542.7	391.0	8.3
area name B.C.HYDRO										
mw	12722.0	9000.5	7927.6	0.0	0.0	0.0	0.0	552.0	520.9	226.9
50 mvar	6456.1	289.0	2999.1	0.0	0.0	2772.5	1191.2	-12.5	-6661.3	2.4

GENERAL ELECTRIC INTERNATIONAL, INC. - PSLF - V15.1
2009 Heavy Summer - Vernon Power Plant 914 MW
CASE NAME: Vpp09hsPost914.sav

	generation capacity	generation on-line	load categories power	load categories current	load categories imped.	shunt	-- svd --	net inter	losses	slack bus
area name AQUILA										
mw	911.5	648.6	675.8	0.0	0.0	0.0	0.0	-43.8	16.6	99.3
52 mvar	410.8	-17.8	157.9	0.0	0.0	-52.4	-124.5	-121.6	122.8	-1.0
area name ALBERTA										
mw	11320.9	8088.0	7660.2	0.0	0.0	0.0	0.0	-0.7	428.4	9.3
54 mvar	5197.7	1476.5	2708.1	0.0	0.0	-7.9	-1575.5	-91.4	443.3	45.3
area name IDAHO										
mw	4579.4	3559.3	2570.2	0.0	0.0	0.0	0.0	729.6	259.5	212.9
60 mvar	2171.0	1072.2	458.9	0.0	0.0	-131.9	0.0	-460.3	1205.5	45.1
area name MONTANA										
mw	3257.5	3018.7	1605.4	0.0	0.0	1.3	0.0	1306.2	105.8	792.7
62 mvar	1186.5	281.7	470.5	0.0	0.0	-142.0	37.1	-465.6	381.7	107.2
area name WAPA U.M.										
mw	61.8	41.2	-48.5	0.0	0.0	0.0	0.0	84.8	4.9	41.2
63 mvar	34.0	2.1	100.5	0.0	0.0	-78.9	20.8	22.9	-63.2	2.1

```
area name  SIERRA
     mw    1901.7   1098.2    1505.2      0.0      0.0      0.0      0.0   -471.4     64.3    81.2
  64 mvar   925.4    139.1     198.9      0.0      0.0    -22.6     73.9     -4.5   -106.7    16.5

area name  PACE
     mw    6361.5   4763.7    5338.0      0.0      0.0      0.0      0.0   -825.1    250.7   102.7
  65 mvar  3296.9    733.2    1714.6      0.0      0.0  -1208.5   -269.7     49.7    447.1    -2.8

area name  PSCOLORADO
     mw    6307.0   4754.0    4824.9      0.0      0.0      0.0      0.0   -186.1    115.2    80.0
  70 mvar  3963.3    729.6    1192.4      0.0      0.0      0.0   -985.6    484.4     38.5    34.4

area name  WAPA R.M.
     mw    7092.2   4999.3    3260.4      0.0      0.0      0.0      0.0   1546.0    192.8   575.9
  73 mvar  3022.8    485.6    1568.5      0.0      0.0   -375.7   -184.2   -862.1    339.0    27.7

TOTL mw  219344.0 146427.7  140967.4      0.0      0.0      1.3      0.0     -0.0   5457.4
     mvar102174.1  17791.8   26649.4      0.0    -14.3  -8344.0  -9179.0      0.0   8679.7
 GENERAL ELECTRIC INTERNATIONAL, INC. - PSLF - V15.1
2009 Heavy Summer - Vernon Power Plant 914 MW
CASE NAME: Vpp09hsPost914.sav

 Area  Interchange  Summary

 FROM AREA    8 IID                                  mw        mvar
   TO AREA   14 ARIZONA                             200.1       -8.5
   TO AREA   19 WAPA L.C.                           100.0      -25.0
   TO AREA   22 SANDIEGO                             -0.2        5.0
   TO AREA   24 SOCALIF                             306.5      -14.2
   TOTAL                                            606.5      -42.7

 FROM AREA   10 NEW MEXICO                           mw        mvar
   TO AREA   14 ARIZONA                            -471.4     -116.3
   TO AREA   19 WAPA L.C.                            35.9       13.9
   TO AREA   73 WAPA R.M.                          -380.8      186.6
   TOTAL                                           -816.3       84.1

 FROM AREA   14 ARIZONA                              mw        mvar
   TO AREA    8 IID                                -200.1        8.5
   TO AREA   10 NEW MEXICO                          471.4      116.3
   TO AREA   19 WAPA L.C.                            46.8     -343.3
   TO AREA   22 SANDIEGO                            516.1       50.0
   TO AREA   24 SOCALIF                             767.9    -1130.8
   TO AREA   26 LADWP                               534.3     -195.3
   TO AREA   65 PACE                                -23.2      -81.3
   TOTAL                                           2113.1    -1575.8

 FROM AREA   18 NEVADA                               mw        mvar
   TO AREA   19 WAPA L.C.                          -397.3      -71.6
   TO AREA   24 SOCALIF                             497.2     -229.4
   TO AREA   26 LADWP                                82.6       20.0
   TO AREA   65 PACE                                 -7.9       22.2
   TOTAL                                            174.6     -258.8

 FROM AREA   19 WAPA L.C.                            mw        mvar
   TO AREA    8 IID                                -100.0       25.0
   TO AREA   10 NEW MEXICO                          -35.9      -13.9
   TO AREA   14 ARIZONA                             -46.8      343.3
   TO AREA   18 NEVADA                              397.3       71.6
   TO AREA   24 SOCALIF                            1267.1      -90.8
   TO AREA   26 LADWP                              1448.2     -308.7
   TO AREA   65 PACE                                -76.3      -25.4
   TO AREA   73 WAPA R.M.                          -226.0       93.0
   TOTAL                                           2627.6       94.1

 FROM AREA   20 MEXICO-CFE                           mw        mvar
   TO AREA   22 SANDIEGO                            111.1      -39.7
   TOTAL                                            111.1      -39.7

 FROM AREA   22 SANDIEGO                             mw        mvar
   TO AREA    8 IID                                  0.2       -5.0
   TO AREA   14 ARIZONA                            -516.1      -50.0
   TO AREA   20 MEXICO-CFE                         -111.1       39.7
   TO AREA   24 SOCALIF                           -1801.2     -182.1
   TOTAL                                          -2428.3     -197.5

 FROM AREA   24 SOCALIF                              mw        mvar
   TO AREA    8 IID                                -306.5       14.2
   TO AREA   14 ARIZONA                            -767.9     1130.8
   TO AREA   18 NEVADA                             -497.2      229.4
   TO AREA   19 WAPA L.C.                         -1267.1       90.8
```

```
   TO AREA   22 SANDIEGO                          1801.2      182.1
   TO AREA   26 LADWP                            -1569.0      210.6
   TO AREA   30 PG AND E                          -251.5      537.4
```



```
   TO AREA   64 SIERRA                            -11.7        2.8
   TOTAL                                       -2869.7     2398.1

 FROM AREA   26 LADWP                              mw        mvar
   TO AREA   14 ARIZONA                          -534.3      195.3
   TO AREA   18 NEVADA                            -82.6      -20.0
   TO AREA   19 WAPA L.C.                      -1448.2      308.7
   TO AREA   24 SOCALIF                          1569.0     -210.6
   TO AREA   40 NORTHWEST                      -2334.2        0.0
   TO AREA   64 SIERRA                            55.6        3.9
   TO AREA   65 PACE                             -212.3      211.7
   TOTAL                                       -2987.0      489.0

 FROM AREA   30 PG AND E                           mw        mvar
   TO AREA   24 SOCALIF                           251.5     -537.4
   TO AREA   40 NORTHWEST                      -3184.2      464.4
   TO AREA   64 SIERRA                              2.8       40.4
   TOTAL                                       -2929.8      -32.6

 FROM AREA   40 NORTHWEST                          mw        mvar
   TO AREA   26 LADWP                            2334.2        0.0
   TO AREA   30 PG AND E                         3184.2     -464.4
   TO AREA   50 B.C.HYDRO                        -360.5      186.5
   TO AREA   52 AQUILA                           -147.0       39.0
   TO AREA   60 IDAHO                             -98.7      400.0
   TO AREA   62 MONTANA                        -1209.9      411.1
   TO AREA   64 SIERRA                              4.4      -29.5
   TOTAL                                         3706.7      542.7

 FROM AREA   50 B.C.HYDRO                          mw        mvar
   TO AREA   40 NORTHWEST                         360.5     -186.5
   TO AREA   52 AQUILA                            190.8       82.6
   TO AREA   54 ALBERTA                             0.7       91.4
   TOTAL                                          552.0      -12.5

 FROM AREA   52 AQUILA                             mw        mvar
   TO AREA   40 NORTHWEST                         147.0      -39.0
   TO AREA   50 B.C.HYDRO                        -190.8      -82.6
   TOTAL                                          -43.8     -121.6

 FROM AREA   54 ALBERTA                            mw        mvar
   TO AREA   50 B.C.HYDRO                          -0.7      -91.4
   TOTAL                                           -0.7      -91.4

 FROM AREA   60 IDAHO                              mw        mvar
   TO AREA   40 NORTHWEST                          98.7     -400.0
   TO AREA   64 SIERRA                            367.0      -29.1
   TO AREA   65 PACE                              263.8      -31.2
   TOTAL                                          729.6     -460.3

 FROM AREA   62 MONTANA                            mw        mvar
   TO AREA   40 NORTHWEST                        1209.9     -411.1
   TO AREA   63 WAPA U.M.                         -43.1      -21.9
   TO AREA   65 PACE                              139.5      -32.5
   TOTAL                                         1306.2     -465.6

 FROM AREA   63 WAPA U.M.                          mw        mvar
   TO AREA   62 MONTANA                            43.1       21.9
   TO AREA   73 WAPA R.M.                          41.7        1.0
   TOTAL                                           84.8       22.9

 FROM AREA   64 SIERRA                             mw        mvar
```

GENERAL ELECTRIC INTERNATIONAL, INC. - PSLF - V15.1
2009 Heavy Summer - Vernon Power Plant 914 MW
CASE NAME: Vpp09hsPost914.sav

```
   TO AREA   24 SOCALIF                           11.7       -2.8
   TO AREA   26 LADWP                            -55.6       -3.9
   TO AREA   30 PG AND E                          -2.8      -40.4
   TO AREA   40 NORTHWEST                         -4.4       29.5
   TO AREA   60 IDAHO                           -367.0       29.1
   TO AREA   65 PACE                              -53.3      -16.0
   TOTAL                                        -471.4       -4.5

 FROM AREA   65 PACE                               mw        mvar
```

TO AREA	14	ARIZONA	23.2	81.3
TO AREA	18	NEVADA	7.9	-22.2
TO AREA	19	WAPA L.C.	76.3	25.4
TO AREA	26	LADWP	212.3	-211.7
TO AREA	60	IDAHO	-263.8	31.2
TO AREA	62	MONTANA	-139.5	32.5
TO AREA	64	SIERRA	53.3	16.0
TO AREA	73	WAPA R.M.	-794.8	97.2
TOTAL			-825.1	49.7

FROM AREA	70	PSCOLORADO	mw	mvar
TO AREA	73	WAPA R.M.	-186.1	484.4
TOTAL			-186.1	484.4

FROM AREA	73	WAPA R.M.	mw	mvar
TO AREA	10	NEW MEXICO	380.8	-186.6
TO AREA	19	WAPA L.C.	226.0	-93.0
TO AREA	63	WAPA U.M.	-41.7	-1.0
TO AREA	65	PACE	794.8	-97.2
TO AREA	70	PSCOLORADO	186.1	-484.4
TOTAL			1546.0	-862.1

GENERAL ELECTRIC INTERNATIONAL, INC. - PSLF - V15.1
2010 Light Spring - PRE CASE
CASE NAME: Vpp10lspPre914.sav

	generation capacity	generation on-line	load categories power	load categories current	load categories imped.	shunt	-- svd --	net inter	losses	slack bus
area name IID										
mw	1460.4	987.7	216.2	0.0	0.0	0.0	0.0	506.7	29.1	56.4
8 mvar	562.1	-103.5	166.6	0.0	0.0	-273.7	0.0	-51.8	46.5	-26.7
area name NEW MEXICO										
mw	4408.2	2028.3	2699.4	0.0	0.0	0.0	0.0	-820.8	149.7	77.8
10 mvar	2528.0	-70.6	749.2	0.0	0.0	-697.1	0.0	-88.9	-33.7	6.1
area name ARIZONA										
mw	23691.6	12823.9	9857.8	0.0	0.0	0.0	0.0	2747.6	218.5	52.0
14 mvar	12668.5	-918.5	1956.9	0.0	0.0	-646.2	9.1	-875.2	-1363.1	-27.7
area name NEVADA										
mw	6752.6	3166.3	3586.4	0.0	0.0	0.0	0.0	-461.7	41.6	55.3
18 mvar	3823.2	-100.4	670.5	0.0	0.0	-214.8	0.0	-536.7	-19.4	19.8
area name WAPA L.C.										
mw	6510.0	2467.3	156.3	0.0	0.0	0.0	0.0	2430.5	116.2	28.3
19 mvar	2305.7	-631.3	53.7	0.0	0.0	51.1	0.0	-349.6	-377.5	-17.2
area name MEXICO-CFE										
mw	3049.0	1346.4	1315.4	0.0	0.0	0.0	0.0	11.5	19.4	157.4
20 mvar	1137.0	-68.9	295.3	0.0	0.0	-130.7	0.0	-139.2	-94.2	62.9
area name SANDIEGO										
mw	3386.2	1409.8	3150.0	0.0	0.0	0.0	0.0	-1790.7	50.5	182.8
22 mvar	1669.2	63.5	400.9	0.0	0.0	118.3	-511.5	0.5	55.4	72.3
area name SOCALIF										
mw	36227.5	18137.3	16482.3	0.0	0.0	0.0	0.0	1392.6	262.5	44.4
24 mvar	16276.9	-581.5	-820.4	0.0	0.0	-789.0	-514.4	1434.7	107.6	18.6
area name LADWP										
mw	4804.1	2355.1	4202.9	0.0	0.0	0.0	0.0	-2023.9	176.7	27.2
26 mvar	2714.2	659.5	703.0	0.0	0.0	-2138.1	0.0	1438.4	656.2	-12.4
area name PG AND E										
mw	31687.0	13078.2	17667.4	0.0	0.0	0.0	0.0	-5275.9	686.7	80.3
30 mvar	16868.9	1790.0	3587.5	0.0	-10.9	-1537.4	-374.6	127.5	-2.2	30.0
area name NORTHWEST										
mw	43303.4	26324.0	24888.7	0.0	0.0	0.0	0.0	594.7	841.6	313.7
40 mvar	16318.8	-1030.2	6590.0	0.0	0.0	-1413.8	-4606.5	483.8	-2083.8	-123.0
area name B.C.HYDRO										
mw	12722.0	9002.0	7927.6	0.0	0.0	0.0	0.0	552.2	522.1	228.3
50 mvar	6456.1	283.2	2999.1	0.0	0.0	2772.6	1191.4	-27.7	-6652.2	2.4

GENERAL ELECTRIC INTERNATIONAL, INC. - PSLF - V15.1
2010 Light Spring - PRE CASE
CASE NAME: Vpp10lspPre914.sav

	generation capacity	generation on-line	load categories power	load categories current	load categories imped.	shunt	-- svd --	net inter	losses	slack bus
area name AQUILA										
mw	911.5	648.6	675.8	0.0	0.0	0.0	0.0	-43.8	16.6	99.3
52 mvar	410.8	-17.8	157.9	0.0	0.0	-52.4	-124.5	-121.4	122.6	-1.0
area name ALBERTA										
mw	11320.9	8088.0	7660.2	0.0	0.0	0.0	0.0	-0.7	428.4	9.3
54 mvar	5197.7	1476.7	2708.1	0.0	0.0	-7.9	-1575.5	-91.3	443.3	45.3
area name IDAHO										
mw	4579.4	3568.3	2570.2	0.0	0.0	0.0	0.0	728.2	269.9	221.9
60 mvar	2971.0	1179.7	458.9	0.0	0.0	-134.3	0.0	-466.5	1321.6	44.6
area name MONTANA										
mw	3257.5	3007.8	1605.4	0.0	0.0	1.3	0.0	1306.3	94.8	781.8
62 mvar	1186.5	220.2	470.5	0.0	0.0	-144.1	74.2	-466.9	286.5	102.4
area name WAPA U.M.										
mw	61.8	41.2	-48.5	0.0	0.0	0.0	0.0	84.7	5.0	41.2
63 mvar	34.0	2.2	100.5	0.0	0.0	-79.0	16.8	24.1	-60.2	2.2

```
area name  SIERRA
     mw    1901.7   1097.8    1505.2      0.0      0.0      0.0      0.0   -472.4     65.0    80.9
  64 mvar   925.4    141.7     198.9      0.0      0.0    -22.6     73.8     -6.4   -102.1    16.1

area name  PACE
     mw    6361.5   4774.3    5338.0      0.0      0.0      0.0      0.0   -825.1    261.4   133.3
  65 mvar  3296.9    857.0    1714.6      0.0      0.0  -1208.3   -295.1     68.1    577.7     0.9

area name  PSCOLORADO
     mw    6307.0   4753.4    4824.9      0.0      0.0      0.0      0.0   -186.7    115.2    79.4
  70 mvar  3963.3    735.8    1192.4      0.0      0.0      0.0   -989.4    493.7     39.2    30.0

area name  WAPA R.M.
     mw    7092.2   5018.2    3260.4      0.0      0.0      0.0      0.0   1546.9    210.9   493.3
  73 mvar  3022.8    597.1    1568.5      0.0      0.0   -364.7   -220.2   -849.4    462.8    19.8

TOTL mw  219795.5 124123.8  119542.1      0.0      0.0      1.3      0.0     -0.0   4581.9
     mvar104336.9   4483.8   25922.5      0.0    -10.9  -6912.0  -7846.4     -0.0  -6669.3
 GENERAL ELECTRIC INTERNATIONAL, INC. - PSLF - V15.1
2010 Light Spring - PRE CASE
CASE NAME: Vpp10lspPre914.sav

 Area  Interchange  Summary

 FROM AREA    8 IID                                  mw        mvar
   TO AREA   14 ARIZONA                             199.3      -89.9
   TO AREA   22 SANDIEGO                             -2.2        7.8
   TO AREA   24 SOCALIF                             309.5       30.3
   TOTAL                                            506.7      -51.8

 FROM AREA   10 NEW MEXICO                           mw        mvar
   TO AREA   14 ARIZONA                            -443.6     -293.6
   TO AREA   19 WAPA L.C.                            17.2        2.1
   TO AREA   73 WAPA R.M.                          -394.5      202.6
   TOTAL                                           -820.8      -88.9

 FROM AREA   14 ARIZONA                              mw        mvar
   TO AREA    8 IID                                -199.3       89.9
   TO AREA   10 NEW MEXICO                          443.6      293.6
   TO AREA   19 WAPA L.C.                           661.1     -160.7
   TO AREA   22 SANDIEGO                            340.8       96.9
   TO AREA   24 SOCALIF                             883.7     -741.0
   TO AREA   26 LADWP                               666.8     -379.7
   TO AREA   65 PACE                                -49.2      -74.1
   TOTAL                                           2747.6     -875.2

 FROM AREA   18 NEVADA                               mw        mvar
   TO AREA   19 WAPA L.C.                          -448.4     -172.1
   TO AREA   24 SOCALIF                             185.1     -292.2
   TO AREA   26 LADWP                              -195.1      -95.5
   TO AREA   65 PACE                                 -3.3       23.2
   TOTAL                                           -461.7     -536.7

 FROM AREA   19 WAPA L.C.                            mw        mvar
   TO AREA   10 NEW MEXICO                          -17.2       -2.1
   TO AREA   14 ARIZONA                            -661.1      160.7
   TO AREA   18 NEVADA                              448.4      172.1
   TO AREA   24 SOCALIF                            1521.1     -292.4
   TO AREA   26 LADWP                              1445.1     -469.1
   TO AREA   65 PACE                                -74.3      -21.6
   TO AREA   73 WAPA R.M.                          -231.4      102.8
   TOTAL                                           2430.5     -349.6

 FROM AREA   20 MEXICO-CFE                           mw        mvar
   TO AREA   22 SANDIEGO                             11.5     -139.2
   TOTAL                                             11.5     -139.2

 FROM AREA   22 SANDIEGO                             mw        mvar
   TO AREA    8 IID                                  2.2       -7.8
   TO AREA   14 ARIZONA                            -340.8      -96.9
   TO AREA   20 MEXICO-CFE                          -11.5      139.2
   TO AREA   24 SOCALIF                           -1440.5      -33.9
   TOTAL                                          -1790.7        0.5

 FROM AREA   24 SOCALIF                              mw        mvar
   TO AREA    8 IID                                -309.5      -30.3
   TO AREA   14 ARIZONA                            -883.7      741.0
   TO AREA   18 NEVADA                             -185.1      292.2
   TO AREA   19 WAPA L.C.                         -1521.1      292.4
   TO AREA   22 SANDIEGO                           1440.5       33.9
   TO AREA   26 LADWP                              1011.7     -287.9
```

```
  TO AREA   30 PG AND E                          1852.9      389.8
  TO AREA   64 SIERRA                             -13.1        3.6
  TOTAL                                         1392.6     1434.7
```



```
FROM AREA   26 LADWP                                mw        mvar
  TO AREA   14 ARIZONA                           -666.8      379.7
  TO AREA   18 NEVADA                             195.1       95.5
  TO AREA   19 WAPA L.C.                        -1445.1      469.1
  TO AREA   24 SOCALIF                          -1011.7      287.9
  TO AREA   40 NORTHWEST                          971.4        0.0
  TO AREA   64 SIERRA                              58.6        3.2
  TO AREA   65 PACE                              -125.4      202.8
  TOTAL                                         -2023.9     1438.4

FROM AREA   30 PG AND E                             mw        mvar
  TO AREA   24 SOCALIF                          -1852.9     -389.8
  TO AREA   40 NORTHWEST                        -3429.0      473.8
  TO AREA   64 SIERRA                               6.0       43.6
  TOTAL                                         -5275.9      127.5

FROM AREA   40 NORTHWEST                            mw        mvar
  TO AREA   26 LADWP                             -971.4        0.0
  TO AREA   30 PG AND E                          3429.0     -473.8
  TO AREA   50 B.C.HYDRO                         -363.1      201.7
  TO AREA   52 AQUILA                            -144.6       38.7
  TO AREA   60 IDAHO                             -201.5      413.5
  TO AREA   62 MONTANA                          -1153.3      333.3
  TO AREA   64 SIERRA                              -0.4      -29.5
  TOTAL                                           594.7      483.8

FROM AREA   50 B.C.HYDRO                            mw        mvar
  TO AREA   40 NORTHWEST                          363.1     -201.7
  TO AREA   52 AQUILA                             188.5       82.7
  TO AREA   54 ALBERTA                              0.7       91.3
  TOTAL                                           552.2      -27.7

FROM AREA   52 AQUILA                               mw        mvar
  TO AREA   40 NORTHWEST                          144.6      -38.7
  TO AREA   50 B.C.HYDRO                         -188.5      -82.7
  TOTAL                                           -43.8     -121.4

FROM AREA   54 ALBERTA                              mw        mvar
  TO AREA   50 B.C.HYDRO                           -0.7      -91.3
  TOTAL                                            -0.7      -91.3

FROM AREA   60 IDAHO                                mw        mvar
  TO AREA   40 NORTHWEST                          201.5     -413.5
  TO AREA   64 SIERRA                             369.4      -31.6
  TO AREA   65 PACE                               157.2      -21.4
  TOTAL                                           728.2     -466.5

FROM AREA   62 MONTANA                              mw        mvar
  TO AREA   40 NORTHWEST                         1153.3     -333.3
  TO AREA   63 WAPA U.M.                          -42.9       13.1
  TO AREA   65 PACE                               195.8     -146.7
  TOTAL                                          1306.3     -466.9

FROM AREA   63 WAPA U.M.                            mw        mvar
  TO AREA   62 MONTANA                             42.9      -13.1
  TO AREA   73 WAPA R.M.                           41.8       37.2
  TOTAL                                            84.7       24.1

FROM AREA   64 SIERRA                               mw        mvar
  TO AREA   24 SOCALIF                             13.1       -3.6
  TO AREA   26 LADWP                              -58.6       -3.2
```

GENERAL ELECTRIC INTERNATIONAL, INC. - PSLF - V15.1
2010 Light Spring - PRE CASE
CASE NAME: Vpp10lspPre914.sav

```
  TO AREA   30 PG AND E                           -6.0       -43.6
  TO AREA   40 NORTHWEST                           0.4        29.5
  TO AREA   60 IDAHO                             -369.4        31.6
  TO AREA   65 PACE                               -51.8       -17.1
  TOTAL                                          -472.4        -6.4

FROM AREA   65 PACE                                 mw        mvar
  TO AREA   14 ARIZONA                             49.2        74.1
  TO AREA   18 NEVADA                               3.3       -23.2
```

TO AREA	19	WAPA L.C.	74.3	21.6
TO AREA	26	LADWP	125.4	-202.8
TO AREA	60	IDAHO	-157.2	21.4
TO AREA	62	MONTANA	-195.8	146.7
TO AREA	64	SIERRA	51.8	17.1
TO AREA	73	WAPA R.M.	-776.1	13.1
TOTAL			-825.1	68.1

			mw	mvar
FROM AREA	70	PSCOLORADO		
TO AREA	73	WAPA R.M.	-186.7	493.7
TOTAL			-186.7	493.7

			mw	mvar
FROM AREA	73	WAPA R.M.		
TO AREA	10	NEW MEXICO	394.5	-202.6
TO AREA	19	WAPA L.C.	231.4	-102.8
TO AREA	63	WAPA U.M.	-41.8	-37.2
TO AREA	65	PACE	776.1	-13.1
TO AREA	70	PSCOLORADO	186.7	-493.7
TOTAL			1546.9	-849.4

GENERAL ELECTRIC INTERNATIONAL, INC. - PSLF - V15.1
2010 Light Spring - Post Vernon 914 MW
CASE NAME: Vpp10lspPost914.sav

	generation capacity	generation on-line	load categories: power	load categories: current	load categories: imped.	shunt	-- svd --	net inter	losses	slack bus
area name IID										
mw	1460.4	987.8	216.2	0.0	0.0	0.0	0.0	506.9	29.0	56.5
8 mvar	562.1	-103.8	166.6	0.0	0.0	-273.8	0.0	-51.4	45.9	-26.7
area name NEW MEXICO										
mw	4408.2	2028.3	2699.4	0.0	0.0	0.0	0.0	-820.7	149.5	77.8
10 mvar	2528.0	-78.8	749.2	0.0	0.0	-697.4	0.0	-95.3	-35.2	6.1
area name ARIZONA										
mw	23691.6	12822.0	9857.8	0.0	0.0	0.0	0.0	2747.6	216.6	50.1
14 mvar	12668.5	-934.2	1956.9	0.0	0.0	-646.5	9.4	-869.3	-1384.7	-27.8
area name NEVADA										
mw	6752.6	3166.3	3586.4	0.0	0.0	0.0	0.0	-461.7	41.6	55.3
18 mvar	3823.2	-102.8	670.5	0.0	0.0	-214.9	0.0	-538.6	-19.8	19.7
area name WAPA L.C.										
mw	6510.0	2466.1	156.3	0.0	0.0	0.0	0.0	2430.3	115.2	27.1
19 mvar	2305.7	-636.8	53.7	0.0	0.0	51.1	0.0	-349.3	-383.3	-17.3
area name MEXICO-CFE										
mw	3049.0	1346.4	1315.4	0.0	0.0	0.0	0.0	11.5	19.4	157.4
20 mvar	1137.0	-66.9	295.3	0.0	0.0	-130.7	0.0	-137.9	-93.6	63.4
area name SANDIEGO										
mw	3386.2	1374.2	3150.0	0.0	0.0	0.0	0.0	-1826.9	51.1	183.4
22 mvar	1669.2	68.6	400.9	0.0	0.0	118.3	-511.3	-3.7	64.5	73.6
area name SOCALIF										
mw	36227.5	18606.3	16512.3	0.0	0.0	0.0	0.0	1825.0	269.0	79.4
24 mvar	16276.9	-469.0	-801.8	0.0	0.0	-788.9	-514.6	1393.3	242.9	18.5
area name LADWP										
mw	4804.1	2293.5	4202.9	0.0	0.0	0.0	0.0	-2083.8	175.0	25.4
26 mvar	2714.2	661.4	703.0	0.0	0.0	-2137.7	0.0	1479.0	617.1	-11.7
area name PG AND E										
mw	31687.0	12749.3	17667.4	0.0	0.0	0.0	0.0	-5611.9	693.8	84.9
30 mvar	16868.9	1892.1	3587.5	0.0	-10.9	-1530.4	-373.9	125.3	94.5	34.6
area name NORTHWEST										
mw	43303.4	26324.0	24888.7	0.0	0.0	0.0	0.0	594.7	841.5	313.7
40 mvar	16318.8	-1019.2	6590.0	0.0	0.0	-1413.8	-4606.6	492.9	-2081.7	-123.0
area name B.C.HYDRO										
mw	12722.0	9002.0	7927.6	0.0	0.0	0.0	0.0	552.2	522.1	228.3
50 mvar	6456.1	283.3	2999.1	0.0	0.0	2772.6	1191.4	-27.7	-6652.1	2.4

GENERAL ELECTRIC INTERNATIONAL, INC. - PSLF - V15.1
2010 Light Spring - Post Vernon 914 MW
CASE NAME: Vpp10lspPost914.sav

	generation capacity	generation on-line	load categories: power	load categories: current	load categories: imped.	shunt	-- svd --	net inter	losses	slack bus
area name AQUILA										
mw	911.5	648.6	675.8	0.0	0.0	0.0	0.0	-43.8	16.6	99.3
52 mvar	410.8	-17.8	157.9	0.0	0.0	-52.4	-124.5	-121.4	122.6	-1.0
area name ALBERTA										
mw	11320.9	8088.0	7660.2	0.0	0.0	0.0	0.0	-0.7	428.4	9.3
54 mvar	5197.7	1476.7	2708.1	0.0	0.0	-7.9	-1575.5	-91.3	443.3	45.3
area name IDAHO										
mw	4579.4	3569.4	2570.2	0.0	0.0	0.0	0.0	728.8	270.3	223.0
60 mvar	2971.0	1187.3	458.9	0.0	0.0	-134.4	0.0	-462.5	1325.3	44.7
area name MONTANA										
mw	3257.5	3007.8	1605.4	0.0	0.0	1.3	0.0	1306.2	94.9	781.8
62 mvar	1186.5	221.5	470.5	0.0	0.0	-144.0	74.2	-466.8	287.7	102.6
area name WAPA U.M.										
mw	61.8	41.2	-48.5	0.0	0.0	0.0	0.0	84.7	5.0	41.2
63 mvar	34.0	2.2	100.5	0.0	0.0	-79.0	16.8	24.1	-60.3	2.2

```
area name  SIERRA
     mw    1901.7   1097.8    1505.2      0.0      0.0      0.0      0.0   -472.5     65.1    80.9
  64 mvar   925.4    143.5     198.9      0.0      0.0    -22.5     73.9     -6.5   -100.3    16.3

area name  PACE
     mw    6361.5   4775.8    5338.0      0.0      0.0      0.0      0.0   -825.4    263.2   134.8
  65 mvar  3296.9    871.7    1714.6      0.0      0.0  -1207.8   -294.7     59.9    599.7     1.2

area name  PSCOLORADO
     mw    6307.0   4753.4    4824.9      0.0      0.0      0.0      0.0   -186.1    114.6    79.4
  70 mvar  3963.3    729.4    1192.4      0.0      0.0      0.0   -989.5    491.6     34.9    29.9

area name  WAPA R.M.
     mw    7092.2   5014.3    3260.4      0.0      0.0      0.0      0.0   1545.6    208.2   489.4
  73 mvar  3022.8    592.1    1568.5      0.0      0.0   -364.9   -198.8   -844.4    431.7    18.6

TOTL mw  219795.5 124162.4  119572.1      0.0      0.0      1.3      0.0     -0.0   4590.5
     mvar104336.9   4700.6   25941.1      0.0    -10.9  -6905.3  -7823.6     -0.0  -6500.8
 GENERAL ELECTRIC INTERNATIONAL, INC. - PSLF - V15.1
2010 Light Spring - Post Vernon 914 MW
CASE NAME:  Vpp10lspPost914.sav

 Area  Interchange  Summary

 FROM AREA    8 IID                                  mw        mvar
   TO AREA   14 ARIZONA                            198.9      -89.8
   TO AREA   22 SANDIEGO                             0.1        7.8
   TO AREA   24 SOCALIF                            307.8       30.6
   TOTAL                                           506.9      -51.4

 FROM AREA   10 NEW MEXICO                          mw        mvar
   TO AREA   14 ARIZONA                           -454.3     -300.1
   TO AREA   19 WAPA L.C.                           19.2        2.9
   TO AREA   73 WAPA R.M.                         -385.6      201.8
   TOTAL                                          -820.7      -95.3

 FROM AREA   14 ARIZONA                             mw        mvar
   TO AREA    8 IID                               -198.9       89.8
   TO AREA   10 NEW MEXICO                          454.3      300.1
   TO AREA   19 WAPA L.C.                           673.5     -165.1
   TO AREA   22 SANDIEGO                            348.1       97.5
   TO AREA   24 SOCALIF                             839.6     -735.4
   TO AREA   26 LADWP                               658.0     -378.4
   TO AREA   65 PACE                                -26.9      -77.7
   TOTAL                                           2747.6     -869.3

 FROM AREA   18 NEVADA                              mw        mvar
   TO AREA   19 WAPA L.C.                          -452.5     -172.4
   TO AREA   24 SOCALIF                             185.7     -292.8
   TO AREA   26 LADWP                              -190.0      -96.9
   TO AREA   65 PACE                                -4.9       23.5
   TOTAL                                           -461.7     -538.6

 FROM AREA   19 WAPA L.C.                           mw        mvar
   TO AREA   10 NEW MEXICO                          -19.2       -2.9
   TO AREA   14 ARIZONA                            -673.5      165.1
   TO AREA   18 NEVADA                              452.5      172.4
   TO AREA   24 SOCALIF                            1516.9     -293.6
   TO AREA   26 LADWP                              1441.7     -469.9
   TO AREA   65 PACE                                -62.4      -25.1
   TO AREA   73 WAPA R.M.                          -225.6      104.6
   TOTAL                                           2430.3     -349.3

 FROM AREA   20 MEXICO-CFE                          mw        mvar
   TO AREA   22 SANDIEGO                             11.5     -137.9
   TOTAL                                             11.5     -137.9

 FROM AREA   22 SANDIEGO                            mw        mvar
   TO AREA    8 IID                                 -0.1       -7.8
   TO AREA   14 ARIZONA                            -348.1      -97.5
   TO AREA   20 MEXICO-CFE                          -11.5      137.9
   TO AREA   24 SOCALIF                           -1467.1      -36.3
   TOTAL                                          -1826.9       -3.7

 FROM AREA   24 SOCALIF                             mw        mvar
   TO AREA    8 IID                               -307.8      -30.6
   TO AREA   14 ARIZONA                           -839.6      735.4
   TO AREA   18 NEVADA                            -185.7      292.8
   TO AREA   19 WAPA L.C.                        -1516.9      293.6
   TO AREA   22 SANDIEGO                          1467.1       36.3
   TO AREA   26 LADWP                             1031.7     -319.8
```

```
  TO AREA   30 PG AND E                          2188.6      382.4
  TO AREA   64 SIERRA                             -12.5        3.3
  TOTAL                                          1825.0     1393.3
```



```
FROM AREA   26 LADWP                                mw        mvar
  TO AREA   14 ARIZONA                           -658.0      378.4
  TO AREA   18 NEVADA                             190.0       96.9
  TO AREA   19 WAPA L.C.                        -1441.7      469.9
  TO AREA   24 SOCALIF                          -1031.7      319.8
  TO AREA   40 NORTHWEST                          971.4        0.0
  TO AREA   64 SIERRA                              56.5        3.6
  TO AREA   65 PACE                               -170.3      210.4
  TOTAL                                         -2083.8     1479.0

FROM AREA   30 PG AND E                             mw        mvar
  TO AREA   24 SOCALIF                          -2188.6     -382.4
  TO AREA   40 NORTHWEST                        -3426.8      463.4
  TO AREA   64 SIERRA                               3.5       44.3
  TOTAL                                         -5611.9      125.3

FROM AREA   40 NORTHWEST                            mw        mvar
  TO AREA   26 LADWP                             -971.4        0.0
  TO AREA   30 PG AND E                          3426.8     -463.4
  TO AREA   50 B.C.HYDRO                         -363.1      201.7
  TO AREA   52 AQUILA                            -144.6       38.6
  TO AREA   60 IDAHO                             -199.5      412.1
  TO AREA   62 MONTANA                          -1154.4      333.6
  TO AREA   64 SIERRA                               1.0      -29.8
  TOTAL                                           594.7      492.9

FROM AREA   50 B.C.HYDRO                            mw        mvar
  TO AREA   40 NORTHWEST                          363.1     -201.7
  TO AREA   52 AQUILA                             188.4       82.7
  TO AREA   54 ALBERTA                              0.7       91.3
  TOTAL                                           552.2      -27.7

FROM AREA   52 AQUILA                               mw        mvar
  TO AREA   40 NORTHWEST                          144.6      -38.6
  TO AREA   50 B.C.HYDRO                         -188.4      -82.7
  TOTAL                                           -43.8     -121.4

FROM AREA   54 ALBERTA                              mw        mvar
  TO AREA   50 B.C.HYDRO                           -0.7      -91.3
  TOTAL                                            -0.7      -91.3

FROM AREA   60 IDAHO                                mw        mvar
  TO AREA   40 NORTHWEST                          199.5     -412.1
  TO AREA   64 SIERRA                             370.9      -31.5
  TO AREA   65 PACE                               158.5      -18.8
  TOTAL                                           728.8     -462.5

FROM AREA   62 MONTANA                              mw        mvar
  TO AREA   40 NORTHWEST                         1154.4     -333.6
  TO AREA   63 WAPA U.M.                          -43.4       13.2
  TO AREA   65 PACE                               195.1     -146.4
  TOTAL                                          1306.2     -466.8

FROM AREA   63 WAPA U.M.                            mw        mvar
  TO AREA   62 MONTANA                             43.4      -13.2
  TO AREA   73 WAPA R.M.                           41.3       37.3
  TOTAL                                            84.7       24.1

FROM AREA   64 SIERRA                               mw        mvar
  TO AREA   24 SOCALIF                             12.5       -3.3
  TO AREA   26 LADWP                              -56.5       -3.6
```

GENERAL ELECTRIC INTERNATIONAL, INC. - PSLF - V15.1
2010 Light Spring - Post Vernon 914 MW
CASE NAME: Vpp10lspPost914.sav

```
  TO AREA   30 PG AND E                           -3.5      -44.3
  TO AREA   40 NORTHWEST                          -1.0       29.8
  TO AREA   60 IDAHO                            -370.9       31.5
  TO AREA   65 PACE                               -53.1      -16.6
  TOTAL                                         -472.5       -6.5

FROM AREA   65 PACE                                 mw        mvar
  TO AREA   14 ARIZONA                             26.9       77.7
  TO AREA   18 NEVADA                               4.9      -23.5
```

TO AREA	19	WAPA L.C.	62.4	25.1
TO AREA	26	LADWP	170.3	-210.4
TO AREA	60	IDAHO	-158.5	18.8
TO AREA	62	MONTANA	-195.1	146.4
TO AREA	64	SIERRA	53.1	16.6
TO AREA	73	WAPA R.M.	-789.6	9.1
TOTAL			-825.4	59.9

			mw	mvar
FROM AREA	70	PSCOLORADO		
TO AREA	73	WAPA R.M.	-186.1	491.6
TOTAL			-186.1	491.6

			mw	mvar
FROM AREA	73	WAPA R.M.		
TO AREA	10	NEW MEXICO	385.6	-201.8
TO AREA	19	WAPA L.C.	225.6	-104.6
TO AREA	63	WAPA U.M.	-41.3	-37.3
TO AREA	65	PACE	789.6	-9.1
TO AREA	70	PSCOLORADO	186.1	-491.6
TOTAL			1545.6	-844.4

Interface Reports

2009 Heavy Summer - Pre Case
CASE NAME: Vpp09hsPre914.sav

NUM	NAME	PNET	QNET	MVA1	MVA2	MVA3	MVA4
0		0.0	0.0	0.0	0.0	0.0	0.0
1	ALBERTA - BRITISH COLUMBIA	-0.7	-91.4	1000.0	-1200.0	0.0	0.0
2	ALBERTA - SASKATCHEWAN	0.1	0.0	150.0	-150.0	0.0	0.0
3	NW-CANADA	-507.6	225.5	2000.0	-3150.0	0.0	0.0
4	WEST OF CASCADES - NORTH	5887.3	-378.2	9800.0	-9800.0	0.0	0.0
5	WEST OF CASCADES - SOUTH	4495.2	-529.2	7000.0	-7000.0	0.0	0.0
6	WEST OF HATWAI	1081.1	-219.1	2800.0	0.0	0.0	0.0
7		0.0	0.0	0.0	0.0	0.0	0.0
8	MONTANA - NORTHWEST	1482.5	-181.9	2200.0	-600.0	0.0	0.0
9	WEST OF BROADVIEW	2177.9	-180.8	2573.0	0.0	0.0	0.0
10	WEST OF COLSTRIP	2144.0	13.4	2598.0	0.0	0.0	0.0
11	WEST OF CROSSOVER	2192.2	4.1	2598.0	0.0	0.0	0.0
12	COLSTRIP 500/230 KV TRANSFORMERS	-498.2	16.2	500.0	-500.0	0.0	0.0
13		0.0	0.0	0.0	0.0	0.0	0.0
14	IDAHO-NW	92.0	-412.7	2400.0	-1200.0	0.0	0.0
15	Path 15	3399.5	-26.2	3900.0	0.0	0.0	0.0
16	IDAHO - SIERRA	364.2	-29.1	500.0	-360.0	0.0	0.0
17	BORAH W	1382.3	-93.1	2307.0	0.0	0.0	0.0
18	IDAHO - MONTANA	-201.2	32.7	337.0	-337.0	0.0	0.0
19	BRIDGER W	2414.9	517.7	2200.0	0.0	0.0	0.0
20	PATH C	-43.2	3.0	1000.0	-1000.0	0.0	0.0
21	ARIZONA - CALIFORNIA	1910.2	-155.9	5700.0	0.0	0.0	0.0
22	SOUTHWEST OF FOUR CORNERS	1349.0	-302.3	2325.0	0.0	0.0	0.0
23	FOUR CORNERS 345/500	0.0	0.0	840.0	-840.0	0.0	0.0
24	PG&E - SPP	4.3	40.2	160.0	-150.0	0.0	0.0
25	PACIFICORP/PG&E 115 KV INTERCON.	73.7	-30.5	80.0	-30.0	0.0	0.0
26	PATH 26	639.1	-519.3	3000.0	-2400.0	0.0	0.0
27	IPP DC	1804.3	919.8	1920.0	-1400.0	0.0	0.0
28	INTERMOUNTAIN - MONA 345 KV	-182.6	118.3	1400.0	-1200.0	0.0	0.0
29	INTERMOUNTAIN - GONDER 230 KV	60.3	-27.8	200.0	0.0	0.0	0.0
30	TOT 1A	620.4	54.8	650.0	0.0	0.0	0.0
31	TOT 2A	618.2	-259.2	690.0	0.0	0.0	0.0
32	PAVANT, INTRMTN - GONDER 230 KV	113.4	21.0	245.0	-150.0	0.0	0.0
33	BONANZA WEST	889.8	-411.8	785.0	0.0	0.0	0.0
34	TOT 2B	128.7	100.4	780.0	-850.0	0.0	0.0
35	TOT 2C	3.0	-21.5	300.0	-300.0	0.0	0.0
36	TOT 3	892.6	-113.1	1588.0	0.0	0.0	0.0
37	TOT 4A	638.3	-30.3	810.0	0.0	0.0	0.0
38	TOT 4B	217.0	-25.1	680.0	0.0	0.0	0.0
39	TOT 5	-338.4	-63.5	1675.0	0.0	0.0	0.0
40	TOT 7	143.1	-127.0	890.0	0.0	0.0	0.0
41	SYLMAR - SCE	-658.4	30.0	1200.0	-1200.0	0.0	0.0
42	IID - SCE	307.9	-13.8	600.0	0.0	0.0	0.0
43	N.SONGS	405.0	272.0	2440.0	0.0	0.0	0.0
44	S.SONGS	1764.8	140.0	2400.0	0.0	0.0	0.0
45	CA INDEPENDENT - MEXICO (CFE)	111.0	-46.6	408.0	-408.0	0.0	0.0
46	WOR	5078.1	-532.9	10118.0	-10118.	0.0	0.0
47	SOUTHERN NEW MEXICO (NM1)	666.9	-170.6	1048.0	-1048.0	0.0	0.0
48	NORTHERN NEW MEXICO (NM2)	1413.5	37.4	1450.0	-1450.0	0.0	0.0
49	EOR	3400.7	-1492.2	7550.0	0.0	0.0	0.0
50	CHOLLA - PINNACLE PEAK	813.7	78.7	1200.0	0.0	0.0	0.0
51	SOUTHERN NAVAJO	1792.5	203.0	2264.0	0.0	0.0	0.0
52	SILVER PEAK - CONTROL 55 KV	12.8	-3.5	17.0	-17.0	0.0	0.0
53	BILLINGS - YELLOWTAIL	-59.7	0.1	400.0	-400.0	0.0	0.0
54	CORONADO - SILVER KING - KYRENE	893.7	-40.1	1100.0	0.0	0.0	0.0
55	BROWNLEE EAST	1096.3	-49.2	1560.0	0.0	0.0	0.0
56		0.0	0.0	0.0	0.0	0.0	0.0
57		0.0	0.0	0.0	0.0	0.0	0.0
58	ELDORADO - MEAD 230 KV LINES	95.8	66.2	1140.0	-1140.0	0.0	0.0
59	EAGLE MTN 230/161 KV - BLYTHE 16	-8.6	37.0	72.0	-72.0	0.0	0.0

2009 Heavy Summer - Pre Case
CASE NAME: Vpp09hsPre914.sav

NUM	NAME	PNET	QNET	MVA1	MVA2	MVA3	MVA4
60	INYO - CONTROL 115 KV TIE	-52.2	6.4	56.0	-56.0	0.0	0.0
61	LUGO - VICTORVILLE 500 KV LINE	729.5	4.0	1950.0	-900.0	0.0	0.0
62	ELDORADO - MCCULLOUGH 500 KV	-418.7	-317.0	2598.0	-2598.0	0.0	0.0
63	PERKINS - MEAD - MARKETPLACE 500	0.0	0.0	1300.0	0.0	0.0	0.0
64	MARKETPLACE - ADELANTO	509.6	-318.2	1200.0	-1200.0	0.0	0.0
65	PDCI	2400.0	-165.6	3100.0	-3100.0	0.0	0.0
66	COI	3103.6	-452.0	4800.0	-3675.0	0.0	0.0
67	PACIFICORP/PG&E 115 INTERCONNECT	73.7	-30.5	0.0	0.0	0.0	0.0
68		0.0	0.0	0.0	0.0	0.0	0.0
69		0.0	0.0	0.0	0.0	0.0	0.0
70		0.0	0.0	0.0	0.0	0.0	0.0
71	NORTH OF HANFORD	1930.6	-98.7	0.0	0.0	0.0	0.0
72	WESTSIDE LOAD	11122.8	-1153.5	0.0	0.0	0.0	0.0
73	N JOHNDAY	4492.3	-172.4	8400.0	-8400.0	0.0	0.0
74	KLAMATH FALLS COGEN	484.1	-44.6	0.0	0.0	0.0	0.0
75	MP-SL	425.1	-461.7	1500.0	-400.0	0.0	0.0
76	ALTURAS PROJECT	2.7	-29.1	300.0	-300.0	0.0	0.0
77	CRYSTAL - ALLEN	243.4	-74.0	0.0	0.0	0.0	0.0
78	TOT 2B1	42.4	78.4	560.0	-600.0	0.0	0.0
79	TOT 2B2	86.2	22.1	265.0	-300.0	0.0	0.0
80	SCE LA Basin Import	3728.2	168.6	0.0	0.0	0.0	0.0
81	WOD	1344.2	72.7	0.0	0.0	0.0	0.0
82		0.0	0.0	0.0	0.0	0.0	0.0
83		0.0	0.0	0.0	0.0	0.0	0.0
84		0.0	0.0	0.0	0.0	0.0	0.0
85	Vincent AA Banks	-1208.9	596.9	0.0	0.0	0.0	0.0
86	Miraloma AA Banks	1568.3	79.7	0.0	0.0	0.0	0.0
87	Devers AA Banks	130.8	-61.5	0.0	0.0	0.0	0.0
88	Valley AA Banks	1226.6	106.2	0.0	0.0	0.0	0.0
89	SOUTHERN OREGON IMPORT	937.7	116.5	0.0	0.0	0.0	0.0
90	DV IMPORT	1475.4	-191.2	0.0	0.0	0.0	0.0
91	EL-LUGO	553.5	109.9	0.0	0.0	0.0	0.0
92	MHV-LUGO	534.4	28.4	0.0	0.0	0.0	0.0
93	Miguel Import	1265.1	-30.8	0.0	0.0	0.0	0.0
94	N.LUGO	242.5	-226.5	0.0	0.0	0.0	0.0
95	S.LUGO	2715.0	128.4	0.0	0.0	0.0	0.0
96	TOT 2	749.8	-180.3	0.0	0.0	0.0	0.0
97	LC GEN	4800.3	-1204.7	0.0	0.0	0.0	0.0
98	UC GEN	0.0	0.0	0.0	0.0	0.0	0.0
99	SCIT	8410.0	-1491.1	0.0	0.0	0.0	0.0

2009 Heavy Summer - Vernon Power Plant 914 MW
CASE NAME: Vpp09hsPost914.sav

NUM	NAME	PNET	QNET	MVA1	MVA2	MVA3	MVA4
0		0.0	0.0	0.0	0.0	0.0	0.0
1	ALBERTA - BRITISH COLUMBIA	-0.7	-91.4	1000.0	-1200.0	0.0	0.0
2	ALBERTA - SASKATCHEWAN	0.1	0.0	150.0	-150.0	0.0	0.0
3	NW-CANADA	-507.6	225.5	2000.0	-3150.0	0.0	0.0
4	WEST OF CASCADES - NORTH	5887.9	-378.1	9800.0	-9800.0	0.0	0.0
5	WEST OF CASCADES - SOUTH	4496.3	-526.9	7000.0	-7000.0	0.0	0.0
6	WEST OF HATWAI	1083.3	-220.0	2800.0	0.0	0.0	0.0
7		0.0	0.0	0.0	0.0	0.0	0.0
8	MONTANA - NORTHWEST	1485.0	-181.9	2200.0	-600.0	0.0	0.0
9	WEST OF BROADVIEW	2180.4	-179.6	2573.0	0.0	0.0	0.0
10	WEST OF COLSTRIP	2144.0	14.7	2598.0	0.0	0.0	0.0
11	WEST OF CROSSOVER	2193.0	5.4	2598.0	0.0	0.0	0.0
12	COLSTRIP 500/230 KV TRANSFORMERS	-498.8	16.0	500.0	-500.0	0.0	0.0
13		0.0	0.0	0.0	0.0	0.0	0.0
14	IDAHO-NW	95.3	-411.3	2400.0	-1200.0	0.0	0.0
15	Path 15	3666.5	-45.3	3900.0	0.0	0.0	0.0
16	IDAHO - SIERRA	367.0	-29.1	500.0	-360.0	0.0	0.0
17	BORAH W	1387.4	-91.0	2307.0	0.0	0.0	0.0
18	IDAHO - MONTANA	-200.9	32.5	337.0	-337.0	0.0	0.0
19	BRIDGER W	2418.2	521.2	2200.0	0.0	0.0	0.0
20	PATH C	-43.0	2.9	1000.0	-1000.0	0.0	0.0
21	ARIZONA - CALIFORNIA	1902.0	-155.9	5700.0	0.0	0.0	0.0
22	SOUTHWEST OF FOUR CORNERS	1327.4	-307.0	2325.0	0.0	0.0	0.0
23	FOUR CORNERS 345/500	0.0	0.0	840.0	-840.0	0.0	0.0
24	PG&E - SPP	2.8	40.4	160.0	-150.0	0.0	0.0
25	PACIFICORP/PG&E 115 KV INTERCON.	73.9	-30.8	80.0	-30.0	0.0	0.0
26	PATH 26	251.5	-537.4	3000.0	-2400.0	0.0	0.0
27	IPP DC	1804.3	919.8	1920.0	-1400.0	0.0	0.0
28	INTERMOUNTAIN - MONA 345 KV	-211.6	124.8	1400.0	-1200.0	0.0	0.0
29	INTERMOUNTAIN - GONDER 230 KV	56.6	-29.1	200.0	0.0	0.0	0.0
30	TOT 1A	627.9	61.2	650.0	0.0	0.0	0.0
31	TOT 2A	606.9	-246.2	690.0	0.0	0.0	0.0
32	PAVANT, INTRMTN - GONDER 230 KV	108.8	19.9	245.0	-150.0	0.0	0.0
33	BONANZA WEST	894.1	-420.5	785.0	0.0	0.0	0.0
34	TOT 2B	99.6	106.7	780.0	-850.0	0.0	0.0
35	TOT 2C	7.9	-22.2	300.0	-300.0	0.0	0.0
36	TOT 3	886.3	-113.7	1588.0	0.0	0.0	0.0
37	TOT 4A	640.6	-29.3	810.0	0.0	0.0	0.0
38	TOT 4B	219.6	-25.2	680.0	0.0	0.0	0.0
39	TOT 5	-332.1	-63.9	1675.0	0.0	0.0	0.0
40	TOT 7	140.8	-126.0	890.0	0.0	0.0	0.0
41	SYLMAR - SCE	-746.9	25.6	1200.0	-1200.0	0.0	0.0
42	IID - SCE	306.5	-14.2	600.0	0.0	0.0	0.0
43	N.SONGS	325.0	270.3	2440.0	0.0	0.0	0.0
44	S.SONGS	1802.1	144.5	2400.0	0.0	0.0	0.0
45	CA INDEPENDENT - MEXICO (CFE)	111.2	-45.2	408.0	-408.0	0.0	0.0
46	WOR	5048.8	-553.9	10118.0	-10118.	0.0	0.0
47	SOUTHERN NEW MEXICO (NM1)	667.0	-170.3	1048.0	-1048.0	0.0	0.0
48	NORTHERN NEW MEXICO (NM2)	1413.3	36.4	1450.0	-1450.0	0.0	0.0
49	EOR	3364.9	-1498.2	7550.0	0.0	0.0	0.0
50	CHOLLA - PINNACLE PEAK	808.6	77.9	1200.0	0.0	0.0	0.0
51	SOUTHERN NAVAJO	1792.8	203.8	2264.0	0.0	0.0	0.0
52	SILVER PEAK - CONTROL 55 KV	11.7	-2.8	17.0	-17.0	0.0	0.0
53	BILLINGS - YELLOWTAIL	-61.4	0.3	400.0	-400.0	0.0	0.0
54	CORONADO - SILVER KING - KYRENE	884.9	-40.2	1100.0	0.0	0.0	0.0
55	BROWNLEE EAST	1096.8	-48.8	1560.0	0.0	0.0	0.0
56		0.0	0.0	0.0	0.0	0.0	0.0
57		0.0	0.0	0.0	0.0	0.0	0.0
58	ELDORADO - MEAD 230 KV LINES	95.0	66.9	1140.0	-1140.0	0.0	0.0
59	EAGLE MTN 230/161 KV - BLYTHE 16	-7.9	37.2	72.0	-72.0	0.0	0.0

2009 Heavy Summer - Vernon Power Plant 914 MW
CASE NAME: Vpp09hsPost914.sav

NUM	NAME	PNET	QNET	MVA1	MVA2	MVA3	MVA4
60	INYO - CONTROL 115 KV TIE	-49.9	6.4	56.0	-56.0	0.0	0.0
61	LUGO - VICTORVILLE 500 KV LINE	766.2	4.8	1950.0	-900.0	0.0	0.0
62	ELDORADO - MCCULLOUGH 500 KV	-426.7	-315.5	2598.0	-2598.0	0.0	0.0
63	PERKINS - MEAD - MARKETPLACE 500	0.0	0.0	1300.0	0.0	0.0	0.0
64	MARKETPLACE - ADELANTO	504.4	-322.6	1200.0	-1200.0	0.0	0.0
65	PDCI	2400.0	-165.6	3100.0	-3100.0	0.0	0.0
66	COI	3107.7	-440.1	4800.0	-3675.0	0.0	0.0
67	PACIFICORP/PG&E 115 INTERCONNECT	73.9	-30.8	0.0	0.0	0.0	0.0
68		0.0	0.0	0.0	0.0	0.0	0.0
69		0.0	0.0	0.0	0.0	0.0	0.0
70		0.0	0.0	0.0	0.0	0.0	0.0
71	NORTH OF HANFORD	1931.6	-98.8	0.0	0.0	0.0	0.0
72	WESTSIDE LOAD	11123.2	-1153.6	0.0	0.0	0.0	0.0
73	N JOHNDAY	4495.5	-171.1	8400.0	-8400.0	0.0	0.0
74	KLAMATH FALLS COGEN	484.1	-41.9	0.0	0.0	0.0	0.0
75	MP-SL	427.6	-460.3	1500.0	-400.0	0.0	0.0
76	ALTURAS PROJECT	4.4	-29.5	300.0	-300.0	0.0	0.0
77	CRYSTAL - ALLEN	244.5	-72.6	0.0	0.0	0.0	0.0
78	TOT 2B1	23.2	81.3	560.0	-600.0	0.0	0.0
79	TOT 2B2	76.3	25.4	265.0	-300.0	0.0	0.0
80	SCE LA Basin Import	3491.0	141.5	0.0	0.0	0.0	0.0
81	WOD	1328.0	68.6	0.0	0.0	0.0	0.0
82		0.0	0.0	0.0	0.0	0.0	0.0
83		0.0	0.0	0.0	0.0	0.0	0.0
84		0.0	0.0	0.0	0.0	0.0	0.0
85	Vincent AA Banks	-1303.3	613.9	0.0	0.0	0.0	0.0
86	Miraloma AA Banks	1546.7	85.1	0.0	0.0	0.0	0.0
87	Devers AA Banks	131.0	-60.5	0.0	0.0	0.0	0.0
88	Valley AA Banks	1236.3	108.3	0.0	0.0	0.0	0.0
89	SOUTHERN OREGON IMPORT	937.9	117.2	0.0	0.0	0.0	0.0
90	DV IMPORT	1448.2	-195.1	0.0	0.0	0.0	0.0
91	EL-LUGO	554.3	107.2	0.0	0.0	0.0	0.0
92	MHV-LUGO	535.1	25.6	0.0	0.0	0.0	0.0
93	Miguel Import	1271.6	-30.2	0.0	0.0	0.0	0.0
94	N.LUGO	225.4	-220.7	0.0	0.0	0.0	0.0
95	S.LUGO	2628.2	126.7	0.0	0.0	0.0	0.0
96	TOT 2	714.3	-161.6	0.0	0.0	0.0	0.0
97	LC GEN	4800.3	-1195.6	0.0	0.0	0.0	0.0
98	UC GEN	0.0	0.0	0.0	0.0	0.0	0.0
99	SCIT	8003.2	-1528.4	0.0	0.0	0.0	0.0

2010 Light Spring - PRE CASE
CASE NAME: Vpp10lspPre914.sav

NUM	NAME	PNET	QNET	MVA1	MVA2	MVA3	MVA4
0		0.0	0.0	0.0	0.0	0.0	0.0
1	ALBERTA - BRITISH COLUMBIA	-0.7	-91.3	1000.0	-1200.0	0.0	0.0
2	ALBERTA - SASKATCHEWAN	0.1	0.0	150.0	-150.0	0.0	0.0
3	NW-CANADA	-507.7	240.3	2000.0	-3150.0	0.0	0.0
4	WEST OF CASCADES - NORTH	5688.2	-393.5	9800.0	-9800.0	0.0	0.0
5	WEST OF CASCADES - SOUTH	5379.8	-390.0	7000.0	-7000.0	0.0	0.0
6	WEST OF HATWAI	902.6	-217.3	2800.0	0.0	0.0	0.0
7		0.0	0.0	0.0	0.0	0.0	0.0
8	MONTANA - NORTHWEST	1421.6	-133.8	2200.0	-600.0	0.0	0.0
9	WEST OF BROADVIEW	2046.5	-165.5	2573.0	0.0	0.0	0.0
10	WEST OF COLSTRIP	2133.1	4.6	2598.0	0.0	0.0	0.0
11	WEST OF CROSSOVER	2181.4	-42.9	2598.0	0.0	0.0	0.0
12	COLSTRIP 500/230 KV TRANSFORMERS	-483.3	26.2	500.0	-500.0	0.0	0.0
13		0.0	0.0	0.0	0.0	0.0	0.0
14	IDAHO-NW	199.4	-413.2	2400.0	-1200.0	0.0	0.0
15	Path 15	2940.0	38.5	3900.0	0.0	0.0	0.0
16	IDAHO - SIERRA	369.4	-31.6	500.0	-360.0	0.0	0.0
17	BORAH W	1483.3	-78.2	2307.0	0.0	0.0	0.0
18	IDAHO - MONTANA	-137.1	7.4	337.0	-337.0	0.0	0.0
19	BRIDGER W	2496.7	574.8	2200.0	0.0	0.0	0.0
20	PATH C	-36.0	1.8	1000.0	-1000.0	0.0	0.0
21	ARIZONA - CALIFORNIA	2161.7	-189.0	5700.0	0.0	0.0	0.0
22	SOUTHWEST OF FOUR CORNERS	1477.6	-573.8	2325.0	0.0	0.0	0.0
23	FOUR CORNERS 345/500	0.0	0.0	840.0	-840.0	0.0	0.0
24	PG&E - SPP	6.0	43.6	160.0	-150.0	0.0	0.0
25	PACIFICORP/PG&E 115 KV INTERCON.	74.1	-34.4	80.0	-30.0	0.0	0.0
26	PATH 26	-1852.9	-389.8	3000.0	-2400.0	0.0	0.0
27	IPP DC	0.0	0.0	1920.0	-1400.0	0.0	0.0
28	INTERMOUNTAIN - MONA 345 KV	-125.1	112.2	1400.0	-1200.0	0.0	0.0
29	INTERMOUNTAIN - GONDER 230 KV	59.7	-29.0	200.0	0.0	0.0	0.0
30	TOT 1A	638.7	58.7	650.0	0.0	0.0	0.0
31	TOT 2A	625.8	-268.9	690.0	0.0	0.0	0.0
32	PAVANT, INTRMTN - GONDER 230 KV	110.4	20.3	245.0	-150.0	0.0	0.0
33	BONANZA WEST	886.9	-410.5	785.0	0.0	0.0	0.0
34	TOT 2B	123.5	95.7	780.0	-850.0	0.0	0.0
35	TOT 2C	3.3	-23.2	300.0	-300.0	0.0	0.0
36	TOT 3	879.0	-143.3	1588.0	0.0	0.0	0.0
37	TOT 4A	727.7	-19.6	810.0	0.0	0.0	0.0
38	TOT 4B	92.2	47.9	680.0	0.0	0.0	0.0
39	TOT 5	-330.0	-64.6	1675.0	0.0	0.0	0.0
40	TOT 7	143.7	-130.1	890.0	0.0	0.0	0.0
41	SYLMAR - SCE	-638.2	39.3	1200.0	-1200.0	0.0	0.0
42	IID - SCE	99.6	12.4	600.0	0.0	0.0	0.0
43	N.SONGS	738.4	177.8	2440.0	0.0	0.0	0.0
44	S.SONGS	1443.7	7.2	2400.0	0.0	0.0	0.0
45	CA INDEPENDENT - MEXICO (CFE)	11.7	-143.8	408.0	-408.0	0.0	0.0
46	WOR	4584.7	-457.0	10118.0	-10118.	0.0	0.0
47	SOUTHERN NEW MEXICO (NM1)	680.9	-149.4	1048.0	-1048.0	0.0	0.0
48	NORTHERN NEW MEXICO (NM2)	1405.6	27.1	1450.0	-1450.0	0.0	0.0
49	EOR	3662.7	-1155.0	7550.0	0.0	0.0	0.0
50	CHOLLA - PINNACLE PEAK	708.3	13.2	1200.0	0.0	0.0	0.0
51	SOUTHERN NAVAJO	973.0	-146.9	2264.0	0.0	0.0	0.0
52	SILVER PEAK - CONTROL 55 KV	13.1	-3.6	17.0	-17.0	0.0	0.0
53	BILLINGS - YELLOWTAIL	58.8	-138.9	400.0	-400.0	0.0	0.0
54	CORONADO - SILVER KING - KYRENE	708.5	-126.8	1100.0	0.0	0.0	0.0
55	BROWNLEE EAST	1043.7	-38.2	1560.0	0.0	0.0	0.0
56		0.0	0.0	0.0	0.0	0.0	0.0
57		0.0	0.0	0.0	0.0	0.0	0.0
58	ELDORADO - MEAD 230 KV LINES	43.8	80.1	1140.0	-1140.0	0.0	0.0
59	EAGLE MTN 230/161 KV - BLYTHE 16	29.9	47.8	72.0	-72.0	0.0	0.0

2010 Light Spring - PRE CASE
CASE NAME: Vpp10lspPre914.sav

NUM	NAME	PNET	QNET	MVA1	MVA2	MVA3	MVA4
60	INYO - CONTROL 115 KV TIE	-50.3	7.6	56.0	-56.0	0.0	0.0
61	LUGO - VICTORVILLE 500 KV LINE	-127.6	167.5	1950.0	-900.0	0.0	0.0
62	ELDORADO - MCCULLOUGH 500 KV	-237.4	-282.8	2598.0	-2598.0	0.0	0.0
63	PERKINS - MEAD - MARKETPLACE 500	0.0	0.0	1300.0	0.0	0.0	0.0
64	MARKETPLACE - ADELANTO	532.3	-386.9	1200.0	-1200.0	0.0	0.0
65	PDCI	-960.7	-1018.6	3100.0	-3100.0	0.0	0.0
66	COI	3352.4	-445.8	4800.0	-3675.0	0.0	0.0
67	PACIFICORP/PG&E 115 INTERCONNECT	74.1	-34.4	0.0	0.0	0.0	0.0
68		0.0	0.0	0.0	0.0	0.0	0.0
69		0.0	0.0	0.0	0.0	0.0	0.0
70		0.0	0.0	0.0	0.0	0.0	0.0
71	NORTH OF HANFORD	563.0	56.8	0.0	0.0	0.0	0.0
72	WESTSIDE LOAD	11763.0	-1022.2	0.0	0.0	0.0	0.0
73	N JOHNDAY	2847.6	-235.0	8400.0	-8400.0	0.0	0.0
74	KLAMATH FALLS COGEN	484.1	-41.2	0.0	0.0	0.0	0.0
75	MP-SL	465.8	-463.2	1500.0	-400.0	0.0	0.0
76	ALTURAS PROJECT	-0.4	-29.5	300.0	-300.0	0.0	0.0
77	CRYSTAL - ALLEN	245.9	-97.6	0.0	0.0	0.0	0.0
78	TOT 2B1	49.2	74.1	560.0	-600.0	0.0	0.0
79	TOT 2B2	74.3	21.6	265.0	-300.0	0.0	0.0
80	SCE LA Basin Import	1062.9	238.1	0.0	0.0	0.0	0.0
81	WOD	1353.7	170.3	0.0	0.0	0.0	0.0
82		0.0	0.0	0.0	0.0	0.0	0.0
83		0.0	0.0	0.0	0.0	0.0	0.0
84		0.0	0.0	0.0	0.0	0.0	0.0
85	Vincent AA Banks	-1578.9	956.2	0.0	0.0	0.0	0.0
86	Miraloma AA Banks	866.3	106.9	0.0	0.0	0.0	0.0
87	Devers AA Banks	564.0	-73.4	0.0	0.0	0.0	0.0
88	Valley AA Banks	664.9	129.3	0.0	0.0	0.0	0.0
89	SOUTHERN OREGON IMPORT	937.6	142.7	0.0	0.0	0.0	0.0
90	DV IMPORT	1544.4	8.8	0.0	0.0	0.0	0.0
91	EL-LUGO	450.4	89.6	0.0	0.0	0.0	0.0
92	MHV-LUGO	428.5	24.2	0.0	0.0	0.0	0.0
93	Miguel Import	904.2	-57.0	0.0	0.0	0.0	0.0
94	N.LUGO	86.5	-38.2	0.0	0.0	0.0	0.0
95	S.LUGO	742.7	273.3	0.0	0.0	0.0	0.0
96	TOT 2	752.7	-196.3	0.0	0.0	0.0	0.0
97	LC GEN	4409.2	-1955.5	0.0	0.0	0.0	0.0
98	UC GEN	0.0	0.0	0.0	0.0	0.0	0.0
99	SCIT	1820.3	-1447.7	0.0	0.0	0.0	0.0

2010 Light Spring - Post Vernon 914 MW
CASE NAME: Vpp10lspPost914.sav

NUM	NAME	PNET	QNET	MVA1	MVA2	MVA3	MVA4
0		0.0	0.0	0.0	0.0	0.0	0.0
1	ALBERTA - BRITISH COLUMBIA	-0.7	-91.3	1000.0	-1200.0	0.0	0.0
2	ALBERTA - SASKATCHEWAN	0.1	0.0	150.0	-150.0	0.0	0.0
3	NW-CANADA	-507.7	240.3	2000.0	-3150.0	0.0	0.0
4	WEST OF CASCADES - NORTH	5688.3	-393.5	9800.0	-9800.0	0.0	0.0
5	WEST OF CASCADES - SOUTH	5380.0	-388.8	7000.0	-7000.0	0.0	0.0
6	WEST OF HATWAI	903.5	-217.8	2800.0	0.0	0.0	0.0
7		0.0	0.0	0.0	0.0	0.0	0.0
8	MONTANA - NORTHWEST	1422.8	-133.8	2200.0	-600.0	0.0	0.0
9	WEST OF BROADVIEW	2048.1	-164.8	2573.0	0.0	0.0	0.0
10	WEST OF COLSTRIP	2133.1	5.4	2598.0	0.0	0.0	0.0
11	WEST OF CROSSOVER	2181.9	-42.1	2598.0	0.0	0.0	0.0
12	COLSTRIP 500/230 KV TRANSFORMERS	-483.6	26.1	500.0	-500.0	0.0	0.0
13		0.0	0.0	0.0	0.0	0.0	0.0
14	IDAHO-NW	197.4	-411.9	2400.0	-1200.0	0.0	0.0
15	Path 15	3204.3	4.4	3900.0	0.0	0.0	0.0
16	IDAHO - SIERRA	370.9	-31.5	500.0	-360.0	0.0	0.0
17	BORAH W	1481.7	-77.7	2307.0	0.0	0.0	0.0
18	IDAHO - MONTANA	-137.5	7.5	337.0	-337.0	0.0	0.0
19	BRIDGER W	2498.7	576.8	2200.0	0.0	0.0	0.0
20	PATH C	-36.2	1.9	1000.0	-1000.0	0.0	0.0
21	ARIZONA - CALIFORNIA	2145.6	-182.4	5700.0	0.0	0.0	0.0
22	SOUTHWEST OF FOUR CORNERS	1451.1	-579.9	2325.0	0.0	0.0	0.0
23	FOUR CORNERS 345/500	0.0	0.0	840.0	-840.0	0.0	0.0
24	PG&E - SPP	3.5	44.3	160.0	-150.0	0.0	0.0
25	PACIFICORP/PG&E 115 KV INTERCON.	73.8	-34.2	80.0	-30.0	0.0	0.0
26	PATH 26	-2188.6	-382.4	3000.0	-2400.0	0.0	0.0
27	IPP DC	0.0	0.0	1920.0	-1400.0	0.0	0.0
28	INTERMOUNTAIN - MONA 345 KV	-169.9	121.6	1400.0	-1200.0	0.0	0.0
29	INTERMOUNTAIN - GONDER 230 KV	57.6	-29.2	200.0	0.0	0.0	0.0
30	TOT 1A	648.6	67.9	650.0	0.0	0.0	0.0
31	TOT 2A	611.2	-271.3	690.0	0.0	0.0	0.0
32	PAVANT, INTRMTN - GONDER 230 KV	109.7	20.2	245.0	-150.0	0.0	0.0
33	BONANZA WEST	893.4	-423.3	785.0	0.0	0.0	0.0
34	TOT 2B	89.3	102.8	780.0	-850.0	0.0	0.0
35	TOT 2C	4.9	-23.5	300.0	-300.0	0.0	0.0
36	TOT 3	871.6	-143.9	1588.0	0.0	0.0	0.0
37	TOT 4A	730.4	-18.1	810.0	0.0	0.0	0.0
38	TOT 4B	93.9	47.6	680.0	0.0	0.0	0.0
39	TOT 5	-322.7	-65.8	1675.0	0.0	0.0	0.0
40	TOT 7	140.9	-128.8	890.0	0.0	0.0	0.0
41	SYLMAR - SCE	-712.3	61.2	1200.0	-1200.0	0.0	0.0
42	IID - SCE	99.0	12.7	600.0	0.0	0.0	0.0
43	N.SONGS	653.8	183.2	2440.0	0.0	0.0	0.0
44	S.SONGS	1467.8	9.4	2400.0	0.0	0.0	0.0
45	CA INDEPENDENT - MEXICO (CFE)	11.7	-142.5	408.0	-408.0	0.0	0.0
46	WOR	4547.0	-447.2	10118.0	-10118.	0.0	0.0
47	SOUTHERN NEW MEXICO (NM1)	681.0	-149.1	1048.0	-1048.0	0.0	0.0
48	NORTHERN NEW MEXICO (NM2)	1405.4	25.9	1450.0	-1450.0	0.0	0.0
49	EOR	3619.6	-1147.0	7550.0	0.0	0.0	0.0
50	CHOLLA - PINNACLE PEAK	702.3	12.8	1200.0	0.0	0.0	0.0
51	SOUTHERN NAVAJO	977.4	-145.2	2264.0	0.0	0.0	0.0
52	SILVER PEAK - CONTROL 55 KV	12.5	-3.3	17.0	-17.0	0.0	0.0
53	BILLINGS - YELLOWTAIL	57.6	-138.5	400.0	-400.0	0.0	0.0
54	CORONADO - SILVER KING - KYRENE	698.2	-126.4	1100.0	0.0	0.0	0.0
55	BROWNLEE EAST	1045.1	-38.2	1560.0	0.0	0.0	0.0
56		0.0	0.0	0.0	0.0	0.0	0.0
57		0.0	0.0	0.0	0.0	0.0	0.0
58	ELDORADO - MEAD 230 KV LINES	43.2	80.2	1140.0	-1140.0	0.0	0.0
59	EAGLE MTN 230/161 KV - BLYTHE 16	30.8	47.8	72.0	-72.0	0.0	0.0

2010 Light Spring - Post Vernon 914 MW
CASE NAME: Vpp10lspPost914.sav

NUM	NAME	PNET	QNET	MVA1	MVA2	MVA3	MVA4
60	INYO - CONTROL 115 KV TIE	-48.1	7.4	56.0	-56.0	0.0	0.0
61	LUGO - VICTORVILLE 500 KV LINE	-85.7	177.7	1950.0	-900.0	0.0	0.0
62	ELDORADO - MCCULLOUGH 500 KV	-248.6	-283.3	2598.0	-2598.0	0.0	0.0
63	PERKINS - MEAD - MARKETPLACE 500	0.0	0.0	1300.0	0.0	0.0	0.0
64	MARKETPLACE - ADELANTO	525.8	-386.9	1200.0	-1200.0	0.0	0.0
65	PDCI	-960.7	-1018.6	3100.0	-3100.0	0.0	0.0
66	COI	3350.4	-435.5	4800.0	-3675.0	0.0	0.0
67	PACIFICORP/PG&E 115 INTERCONNECT	73.8	-34.2	0.0	0.0	0.0	0.0
68		0.0	0.0	0.0	0.0	0.0	0.0
69		0.0	0.0	0.0	0.0	0.0	0.0
70		0.0	0.0	0.0	0.0	0.0	0.0
71	NORTH OF HANFORD	563.1	56.8	0.0	0.0	0.0	0.0
72	WESTSIDE LOAD	11762.6	-1023.2	0.0	0.0	0.0	0.0
73	N JOHNDAY	2848.3	-234.4	8400.0	-8400.0	0.0	0.0
74	KLAMATH FALLS COGEN	484.1	-39.4	0.0	0.0	0.0	0.0
75	MP-SL	464.1	-461.9	1500.0	-400.0	0.0	0.0
76	ALTURAS PROJECT	1.0	-29.8	300.0	-300.0	0.0	0.0
77	CRYSTAL - ALLEN	246.2	-97.1	0.0	0.0	0.0	0.0
78	TOT 2B1	26.9	77.7	560.0	-600.0	0.0	0.0
79	TOT 2B2	62.4	25.1	265.0	-300.0	0.0	0.0
80	SCE LA Basin Import	842.0	254.5	0.0	0.0	0.0	0.0
81	WOD	1348.9	174.4	0.0	0.0	0.0	0.0
82		0.0	0.0	0.0	0.0	0.0	0.0
83		0.0	0.0	0.0	0.0	0.0	0.0
84		0.0	0.0	0.0	0.0	0.0	0.0
85	Vincent AA Banks	-1644.8	935.6	0.0	0.0	0.0	0.0
86	Miraloma AA Banks	842.2	109.5	0.0	0.0	0.0	0.0
87	Devers AA Banks	544.1	-72.9	0.0	0.0	0.0	0.0
88	Valley AA Banks	678.7	129.0	0.0	0.0	0.0	0.0
89	SOUTHERN OREGON IMPORT	937.5	142.3	0.0	0.0	0.0	0.0
90	DV IMPORT	1513.3	12.5	0.0	0.0	0.0	0.0
91	EL-LUGO	450.7	91.6	0.0	0.0	0.0	0.0
92	MHV-LUGO	428.9	26.2	0.0	0.0	0.0	0.0
93	Miguel Import	910.5	-56.5	0.0	0.0	0.0	0.0
94	N.LUGO	72.1	-32.6	0.0	0.0	0.0	0.0
95	S.LUGO	664.2	280.1	0.0	0.0	0.0	0.0
96	TOT 2	705.4	-191.9	0.0	0.0	0.0	0.0
97	LC GEN	4409.2	-1950.4	0.0	0.0	0.0	0.0
98	UC GEN	0.0	0.0	0.0	0.0	0.0	0.0
99	SCIT	1432.5	-1423.6	0.0	0.0	0.0	0.0

SCE Generation Reports

**** gens ** Page 1 [vpp09hspre914.sav] Thu Sep 07 14:43:45 2006**

2009 Heavy Summer - Pre Case
CASE NAME: Vpp09hsBaseCase914.sav

BUS-NO	NAME1	KV1	ID	ST	PGEN	QGEN	QMX	QMN	IREG	NAME2	KV2	VSCHED	V-ACT
24656	VERNNST1	19.00	1	0	360.5	33.4	174.0	-114.0	24656	VERNNST	19.00	0.9977	0.9912
24654	VERNNCT3	15.00	1	0	194.5	23.5	95.9	-65.1	24654	VERNNCT	15.00	0.9977	0.9912
24652	VERNNCT2	15.00	1	0	194.5	23.5	95.9	-65.1	24652	VERNNCT	15.00	0.9977	0.9912
24651	VERNNCT1	15.00	1	0	194.5	23.5	95.9	-65.1	24651	VERNNCT	15.00	0.9977	0.9912
24456	BOREL	66.00	1	0	10.0	0.0	5.0	-2.5	24456	BOREL	66.00	1.0000	0.9498
28055	TOT018S2	18.00	S2	1	81.1	13.4	53.0	-38.0	28055	TOT018S	18.00	1.0000	1.0000
28054	TOT018G3	18.00	G3	1	177.4	29.4	105.0	-76.0	28054	TOT018G	18.00	1.0000	1.0000
28053	TOT018S1	18.00	S1	1	182.5	30.5	109.0	-78.0	28053	TOT018S	18.00	1.0000	1.0000
28052	TOT018G2	18.00	G2	1	177.4	29.4	105.0	-76.0	28052	TOT018G	18.00	1.0000	1.0000
28051	TOT018G1	18.00	G1	1	177.4	29.4	105.0	-76.0	28051	TOT018G	18.00	1.0000	1.0000
24001	ALAMT1 G	18.00	1	1	177.4	-50.0	75.0	-50.0	24001	ALAMT1	18.00	1.0000	1.0038
24002	ALAMT2 G	18.00	2	1	177.4	-50.0	75.0	-50.0	24002	ALAMT2	18.00	1.0000	1.0038
24003	ALAMT3 G	18.00	3	1	304.2	43.9	150.0	-100.0	24003	ALAMT3	18.00	1.0000	1.0000
24004	ALAMT4 G	18.00	4	1	304.2	43.9	150.0	-100.0	24004	ALAMT4	18.00	1.0000	1.0000
24005	ALAMT5 G	20.00	5	1	456.3	23.4	240.0	-120.0	24005	ALAMT5	20.00	1.0000	1.0000
24161	ALAMT6 G	20.00	6	1	456.3	23.4	210.0	-150.0	24161	ALAMT6	20.00	1.0000	1.0000
24162	ALAMT7 G	16.00	7	0	0.0	50.0	50.0	-25.0	24162	ALAMT7	16.00	1.0250	1.0135
25203	ANAHEIMG	13.80	1	0	0.0	11.7	25.0	-12.0	25203	ANAHEIM	13.80	1.0000	0.9936
24009	APPGEN1G	13.80	1	0	0.0	6.4	42.0	0.0	24009	APPGEN1	13.80	1.0000	1.0032
24010	APPGEN2G	13.80	2	0	0.0	6.4	42.0	0.0	24010	APPGEN2	13.80	1.0000	1.0032
24011	ARCO 1G	13.80	1	1	81.1	-0.9	40.0	-20.0	24011	ARCO 1	13.80	1.0000	1.0000
24012	ARCO 2G	13.80	2	1	81.1	-0.9	40.0	-20.0	24012	ARCO 2	13.80	1.0000	1.0000
24013	ARCO 3G	13.80	3	1	81.1	-0.9	40.0	-20.0	24013	ARCO 3	13.80	1.0000	1.0000
24014	ARCO 4G	13.80	4	1	81.1	-0.9	40.0	-20.0	24014	ARCO 4	13.80	1.0000	1.0000
24163	ARCO 5G	13.80	5	1	40.6	0.3	25.0	-20.0	24163	ARCO 5	13.80	1.0000	1.0000
24164	ARCO 6G	13.80	6	1	40.6	0.4	25.0	-20.0	24164	ARCO 6	13.80	1.0000	1.0000
24703	BLM E7G	13.80	7	1	20.3	3.7	15.0	-7.5	24703	BLM E7	13.80	1.0000	1.0000
24704	BLM E8G	13.80	8	1	20.3	3.7	15.0	-7.5	24704	BLM E8	13.80	1.0000	1.0000
24705	BLM W9G	13.80	9	1	20.3	4.1	12.0	-6.0	24705	BLM W9	13.80	1.0000	1.0000
24708	BORAX I	13.80	1	1	27.4	-4.3	22.0	-11.0	24708	BORAX I	13.80	1.0000	1.0000
24018	BRIGEN	13.80	1	1	30.4	-8.0	17.0	-8.0	24018	BRIGEN	13.80	1.0000	1.0228
24709	BSPHYD26	2.20	26	1	10.1	2.7	7.0	0.0	24709	BSPHYD2	2.20	1.0000	1.0000
24710	BSPHYD34	2.20	34	1	10.1	1.0	7.0	-3.0	24710	BSPHYD3	2.20	1.0000	1.0000
24711	CALGEN1G	13.80	1	1	30.4	-2.2	15.0	-7.5	24711	CALGEN1	13.80	1.0000	1.0000
24712	CALGEN2G	13.80	2	1	25.3	-2.5	12.0	-6.0	24712	CALGEN2	13.80	1.0000	1.0000
24713	CALGEN3G	13.80	3	1	25.3	-2.5	12.0	-6.0	24713	CALGEN3	13.80	1.0000	1.0000
24020	CARBOGEN	13.80	1	1	34.5	-0.0	17.0	0.0	24020	CARBOGE	13.80	1.0000	1.0499
24022	CHEVGEN1	13.80	1	1	30.4	-0.0	19.0	0.0	24022	CHEVGEN	13.80	1.0000	1.0618
24023	CHEVGEN2	13.80	2	1	30.4	-0.0	19.0	0.0	24023	CHEVGEN	13.80	1.0000	1.0618
24026	CIMGEN	13.80	1	1	30.4	0.0	13.0	0.0	24026	CIMGEN	13.80	1.0000	1.0331
24027	COLDGEN	13.80	1	1	28.4	-7.0	14.0	-7.0	24027	COLDGEN	13.80	1.0000	1.0193
24714	ALTA 1G	13.80	1	1	60.8	5.9	32.0	-16.0	24714	ALTA 1	13.80	1.0000	1.0000
24715	ALTA 2G	13.80	2	1	81.1	7.7	40.0	-20.0	24715	ALTA 2	13.80	1.0000	1.0000
24726	CSA DIAB	4.16	1	1	15.2	0.8	15.0	-8.0	24726	CSA DIA	4.16	1.0000	1.0000
24030	DELGEN	13.80	1	1	45.6	-0.0	20.0	0.0	24030	DELGEN	13.80	1.0000	1.0328
25648	DVLCYN1G	13.80	1	1	50.7	-15.0	30.0	-15.0	25648	DVLCYN1	13.80	1.0000	1.0075
25649	DVLCYN2G	13.80	2	1	55.8	-15.0	30.0	-15.0	25649	DVLCYN2	13.80	1.0000	1.0074
25603	DVLCYN3G	13.80	3	1	81.1	-15.0	30.0	-15.0	25603	DVLCYN3	13.80	1.0000	1.0027
25604	DVLCYN4G	13.80	4	1	81.1	-15.0	30.0	-15.0	25604	DVLCYN4	13.80	1.0000	1.0027
25605	EDMON1AP	14.40	1	1	-60.8	0.5	1.0	0.0	25605	EDMON1A	14.40	1.0000	0.9831
25606	EDMON2AP	14.40	2	1	-60.8	0.5	1.0	0.0	25606	EDMON2A	14.40	1.0000	0.9830
25607	EDMON3AP	14.40	3	1	-60.8	0.5	1.0	0.0	25607	EDMON3A	14.40	1.0000	0.9782
25607	EDMON3AP	14.40	4	1	-60.8	0.5	1.0	0.0	25607	EDMON3A	14.40	1.0000	0.9782
25608	EDMON4AP	14.40	5	0	-60.0	0.5	1.0	0.0	25608	EDMON4A	14.40	1.0000	0.9840
25608	EDMON4AP	14.40	6	0	-60.0	0.5	1.0	0.0	25608	EDMON4A	14.40	1.0000	0.9840
25609	EDMON5AP	14.40	7	0	0.0	0.5	1.0	0.0	25609	EDMON5A	14.40	1.0000	0.9840
25609	EDMON5AP	14.40	8	0	0.0	0.5	1.0	0.0	25609	EDMON5A	14.40	1.0000	0.9840
25610	EDMON6AP	14.40	9	0	0.0	0.5	1.0	0.0	25610	EDMON6A	14.40	1.0000	0.9840
25610	EDMON6AP	14.40	10	0	0.0	0.5	1.0	0.0	25610	EDMON6A	14.40	1.0000	0.9840
25611	EDMON7AP	14.40	11	0	0.0	0.5	1.0	0.0	25611	EDMON7A	14.40	1.0000	0.9840

2009 Heavy Summer - Pre Case
CASE NAME: Vpp09hsBaseCase914.

BUS-NO	NAME1	KV1	ID	ST	PGEN	QGEN	QMX	QMN	IREG	NAME2	KV2	VSCHED	V-ACT
25611	EDMON7AP	14.40	12	0	0.0	0.5	1.0	0.0	25611	EDMON7A	14.40	1.0000	0.9840
25612	EDMON8AP	14.40	13	0	0.0	0.5	1.0	0.0	25612	EDMON8A	14.40	1.0000	0.9840
25612	EDMON8AP	14.40	14	0	0.0	0.5	1.0	0.0	25612	EDMON8A	14.40	1.0000	0.9840
24045	ELSEG1 G	18.00	1	0	0.0	-18.1	75.0	-50.0	24045	ELSEG1	18.00	1.0300	1.0647
24046	ELSEG2 G	18.00	2	0	0.0	-20.1	75.0	-50.0	24046	ELSEG2	18.00	1.0300	1.0647
24047	ELSEG3 G	18.00	3	1	334.6	51.7	145.0	-100.0	24047	ELSEG3	18.00	1.0300	1.0300
24048	ELSEG4 G	18.00	4	1	334.6	51.0	145.0	-100.0	24048	ELSEG4	18.00	1.0300	1.0300
24050	MTNVIST1	15.50	1	0	0.0	22.2	55.0	-40.0	24050	MTNVIST	15.50	1.0300	1.0542
24051	MTNVIST2	15.50	2	0	0.0	22.2	55.0	-40.0	24051	MTNVIST	15.50	1.0300	1.0542
24052	MTNVIST3	18.00	3	1	324.5	74.4	140.0	-100.0	24052	MTNVIST	18.00	1.0300	1.0300
24053	MTNVIST4	18.00	4	1	324.5	75.0	140.0	-100.0	24053	MTNVIST	18.00	1.0300	1.0300
24054	MTNVIST5	16.00	5	0	0.0	45.9	50.0	-25.0	24054	MTNVIST	16.00	1.0300	1.0172
24060	GROWGEN	13.80	1	1	28.4	-0.0	14.0	0.0	24060	GROWGEN	13.80	1.0000	1.0239
24905	RVCANAL1	13.80	1	0	0.0	1.2	17.0	-10.0	24905	RVCANAL	13.80	1.0000	1.0068
24906	RVCANAL2	13.80	2	0	0.0	1.2	17.0	-10.0	24906	RVCANAL	13.80	1.0000	1.0068
24907	RVCANAL3	13.80	3	0	0.0	2.2	25.0	-15.0	24907	RVCANAL	13.80	1.0000	1.0068
24908	RVCANAL4	13.80	4	0	0.0	2.2	25.0	-15.0	24908	RVCANAL	13.80	1.0000	1.0068
24063	HILLGEN	13.80	1	1	25.3	-0.0	25.0	0.0	24063	HILLGEN	13.80	1.0000	1.0212
24064	HINSON	66.00	1	0	0.0	0.0	23.5	-12.0	24064	HINSON	66.00	1.0150	1.0501
24066	HUNT1 G	13.80	1	1	218.0	52.9	130.0	-65.0	24066	HUNT1	13.80	1.0200	1.0200
24067	HUNT2 G	13.80	2	1	218.0	52.9	130.0	-65.0	24067	HUNT2	13.80	1.0200	1.0200
24167	HUNT3 G	13.80	3	1	202.8	19.8	140.0	-70.0	24167	HUNT3	13.80	1.0000	1.0000
24168	HUNT4 G	13.80	4	1	202.8	19.8	140.0	-70.0	24168	HUNT4	13.80	1.0000	1.0000
24169	HUNT5 G	16.00	5	0	0.0	-5.6	130.0	-25.0	24169	HUNT5	16.00	1.0000	1.0179
24070	ICEGEN	13.80	1	1	25.3	0.0	22.0	0.0	24070	ICEGEN	13.80	1.0000	1.0340
24071	INLAND	13.80	1	1	30.4	0.0	15.0	0.0	24071	INLAND	13.80	1.0000	1.0401
24078	LBEACH1G	13.80	1	0	55.0	14.8	30.0	-15.0	24078	LBEACH1	13.80	1.0000	1.0268
24170	LBEACH2G	13.80	2	0	55.0	3.6	30.0	-15.0	24170	LBEACH2	13.80	1.0000	1.0501
24171	LBEACH3G	13.80	3	0	55.0	14.9	30.0	-15.0	24171	LBEACH3	13.80	1.0000	1.0268
24172	LBEACH4G	13.80	4	0	55.0	14.8	30.0	-15.0	24172	LBEACH4	13.80	1.0000	1.0268
24173	LBEACH5G	13.80	5	0	55.0	6.4	30.0	-15.0	24173	LBEACH5	13.80	1.0000	1.0363
24174	LBEACH6G	13.80	6	0	55.0	6.4	30.0	-15.0	24174	LBEACH6	13.80	1.0000	1.0363
24079	LBEACH7G	13.80	7	0	55.0	6.4	30.0	-15.0	24079	LBEACH7	13.80	1.0000	1.0363
24080	LBEACH8G	13.80	8	0	0.0	11.0	48.0	-34.0	24080	LBEACH8	13.80	1.0000	1.0268
24081	LBEACH9G	13.80	9	0	0.0	8.3	30.0	-15.0	24081	LBEACH9	13.80	1.0000	1.0268
24737	LUZ8 G	13.80	8	0	60.0	-0.2	40.0	-20.0	24737	LUZ8 G	13.80	1.0000	1.0036
24738	LUZ9 G	13.80	9	0	60.0	-0.2	40.0	-20.0	24738	LUZ9 G	13.80	1.0000	1.0036
24089	MANDLY1G	13.80	1	0	215.0	62.1	130.0	-67.5	24089	MANDLY1	13.80	1.0000	0.9709
24090	MANDLY2G	13.80	2	0	100.0	45.2	130.0	-67.5	24090	MANDLY2	13.80	1.0000	0.9709
24222	MANDLY3G	16.00	3	0	0.0	3.8	130.0	-67.5	24222	MANDLY3	16.00	1.0000	0.9826
24740	MC GEN	13.80	1	1	55.8	-11.7	75.0	-35.0	24740	MC GEN	13.80	1.0300	1.0300
24094	MOBGEN	13.80	1	1	40.6	0.0	20.0	0.0	24094	MOBGEN	13.80	1.0000	1.0481
24742	MOGEN G	13.80	1	1	57.8	-3.0	27.0	-13.0	24742	MOGEN	13.80	1.0000	1.0000
24095	MOHAV1CC	22.00	1	0	0.0	25.3	350.0	-150.0	24095	MOHAV1C	22.00	1.0000	1.0238
24096	MOHAV2CC	22.00	2	0	0.0	54.6	350.0	-150.0	24096	MOHAV2C	22.00	1.0000	1.0238
24744	NAVYII4G	13.80	4	1	25.3	5.1	12.0	-6.0	24744	NAVYII4	13.80	1.0000	1.0000
24745	NAVYII5G	13.80	5	1	25.3	5.1	12.0	-6.0	24745	NAVYII5	13.80	1.0000	1.0000
24746	NAVYII6G	13.80	6	1	25.3	5.1	12.0	-6.0	24746	NAVYII6	13.80	1.0000	1.0000
24211	OLINDA	66.00	1	0	0.0	0.0	3.0	-1.8	24211	OLINDA	66.00	1.0450	1.0367
24102	OMAR 1G	13.80	1	1	76.0	0.0	14.3	0.0	24102	OMAR 1	13.80	1.0000	1.0082
24103	OMAR 2G	13.80	2	1	76.0	0.0	14.3	0.0	24103	OMAR 2	13.80	1.0000	1.0082
24104	OMAR 3G	13.80	3	1	76.0	0.0	14.3	0.0	24104	OMAR 3	13.80	1.0000	1.0082
24105	OMAR 4G	13.80	4	1	76.0	-5.2	14.3	-20.0	24105	OMAR 4	13.80	1.0000	1.0000
24107	ORMOND1G	26.00	1	0	750.0	273.0	400.0	-240.0	24107	ORMOND1	26.00	1.0000	1.0000
24108	ORMOND2G	26.00	2	0	750.0	199.3	400.0	-240.0	24108	ORMOND2	26.00	1.0000	1.0000
24747	OXBOW G1	13.80	1	1	53.7	0.0	27.0	0.0	24747	OXBOW G	13.80	1.0000	1.0005
24110	OXGEN	13.80	1	1	34.5	1.4	17.0	0.0	24110	OXGEN	13.80	1.0000	1.0000
24113	PANDOL	13.80	1	1	55.8	-10.2	25.0	-12.0	24113	PANDOL	13.80	1.0000	1.0000
24422	PALMDALE	66.00	1	0	0.0	-12.0	0.5	-0.3	24422	PALMDAL	66.00	1.0100	0.9817
25617	PEARBMAP	13.20	1	0	0.0	1.0	1.0	0.0	25617	PEARBMA	13.20	1.0000	0.9968

2009 Heavy Summer - Pre Case
CASE NAME: Vpp09hsBaseCase914.

BUS-NO	NAME1	KV1	ID	ST	PGEN	QGEN	QMX	QMN	IREG	NAME2	KV2	VSCHED	V-ACT
25617	PEARBMAP	13.20	2	0	0.0	1.0	1.0	0.0	25617	PEARBMA	13.20	1.0000	0.9968
25617	PEARBMAP	13.20	3	0	0.0	1.0	1.0	0.0	25617	PEARBMA	13.20	1.0000	0.9968
25618	PEARBMBP	13.20	4	0	0.0	1.0	1.0	0.0	25618	PEARBMB	13.20	1.0000	0.9968
25618	PEARBMBP	13.20	5	0	0.0	1.0	1.0	0.0	25618	PEARBMB	13.20	1.0000	0.9968
25618	PEARBMBP	13.20	6	0	0.0	1.0	1.0	0.0	25618	PEARBMB	13.20	1.0000	0.9968
25619	PEARBMCP	13.80	7	1	-22.3	0.5	1.0	0.0	25619	PEARBMC	13.80	1.0000	0.9969
25619	PEARBMCP	13.80	8	0	0.0	0.5	1.0	0.0	25619	PEARBMC	13.80	1.0000	0.9969
25620	PEARBMDP	13.80	9	0	0.0	0.5	1.0	0.0	25620	PEARBMD	13.80	1.0000	0.9968
24118	PITCHGEN	13.80	1	1	30.4	0.0	15.0	0.0	24118	PITCHGE	13.80	1.0000	1.0030
24119	PROCGEN	13.80	1	1	51.7	1.9	26.0	0.0	24119	PROCGEN	13.80	1.0000	1.0000
24120	PULPGEN	13.80	1	1	35.5	-0.0	20.0	0.0	24120	PULPGEN	13.80	1.0000	1.0238
24121	REDON5 G	18.00	5	1	162.2	-50.0	75.0	-50.0	24121	REDON5	18.00	1.0300	1.0327
24122	REDON6 G	18.00	6	1	147.0	-50.0	75.0	-50.0	24122	REDON6	18.00	1.0300	1.0359
24123	REDON7 G	20.00	7	1	486.7	210.0	210.0	-150.0	24123	REDON7	20.00	1.0300	1.0284
24124	REDON8 G	20.00	8	1	486.7	210.0	210.0	-150.0	24124	REDON8	20.00	1.0300	1.0283
24252	TOT12810	16.50	1	0	185.0	-8.7	115.0	-95.0	24252	TOT1281	16.50	1.0000	1.0198
24257	TOT12820	16.50	1	0	185.0	-11.4	115.0	-95.0	24257	TOT1282	16.50	1.0000	1.0198
24253	TOT12810	16.50	1	0	185.0	-9.5	115.0	-95.0	24253	TOT1281	16.50	1.0000	1.0198
24258	TOT12820	16.50	1	0	185.0	-9.2	115.0	-95.0	24258	TOT1282	16.50	1.0000	1.0198
24254	TOT12810	21.00	0	0	336.0	-14.0	205.0	-170.0	24254	TOT1281	21.00	1.0000	1.0198
24259	TOT12820	21.00	0	0	336.0	-15.5	205.0	-170.0	24259	TOT1282	21.00	1.0000	1.0198
24914	MTNVIEW1	13.80	1	0	0.0	-1.8	30.0	-15.0	24914	MTNVIEW	13.80	1.0000	1.0075
24915	MTNVIEW2	13.80	2	0	0.0	-1.2	30.0	-15.0	24915	MTNVIEW	13.80	1.0000	1.0075
24129	S.ONOFR2	22.00	2	1	1074.8	318.8	550.0	-410.0	24129	S.ONOFR	22.00	1.0200	1.0200
24130	S.ONOFR3	22.00	3	1	1095.1	319.1	550.0	-410.0	24130	S.ONOFR	22.00	1.0200	1.0200
24136	SEAWEST	230.00	1	0	0.0	12.7	15.0	0.0	24136	SEAWEST	230.00	1.0000	0.9977
24751	SEGS 1G	13.80	1	1	20.3	-5.0	10.0	-5.0	24751	SEGS 1	13.80	1.0000	1.0150
24752	SEGS 2G	13.80	2	1	30.4	-5.0	10.0	-5.0	24752	SEGS 2	13.80	1.0000	1.0127
24139	SERRFGEN	13.80	1	1	33.5	-0.0	20.0	0.0	24139	SERRFGE	13.80	1.0000	1.0499
24140	SIMPSON	13.80	1	1	37.5	0.0	20.0	0.0	24140	SIMPSON	13.80	1.0000	1.0330
24754	SUNGEN3G	13.80	3	1	34.5	-0.1	17.0	-8.0	24754	SUNGEN3	13.80	1.0000	1.0000
24755	SUNGEN4G	13.80	4	1	34.5	-0.1	17.0	-8.0	24755	SUNGEN4	13.80	1.0000	1.0000
24756	SUNGEN5G	13.80	5	1	34.5	-0.1	17.0	-8.0	24756	SUNGEN5	13.80	1.0000	1.0000
24757	SUNGEN6G	13.80	6	1	35.5	0.1	17.0	-8.0	24757	SUNGEN6	13.80	1.0000	1.0000
24758	SUNGEN7G	13.80	7	1	35.5	0.1	17.0	-8.0	24758	SUNGEN7	13.80	1.0000	1.0000
24143	SYCCYN1G	13.80	1	1	71.0	0.0	14.3	0.0	24143	SYCCYN1	13.80	1.0000	1.0086
24144	SYCCYN2G	13.80	2	1	71.0	0.0	14.3	0.0	24144	SYCCYN2	13.80	1.0000	1.0086
24145	SYCCYN3G	13.80	3	1	71.0	0.0	14.3	0.0	24145	SYCCYN3	13.80	1.0000	1.0086
24146	SYCCYN4G	13.80	4	1	71.0	0.0	14.3	0.0	24146	SYCCYN4	13.80	1.0000	1.0086
24148	TENNGEN1	13.80	1	1	22.3	-0.0	15.0	0.0	24148	TENNGEN	13.80	1.0000	1.0031
24149	TENNGEN2	13.80	2	1	22.3	-0.0	15.0	0.0	24149	TENNGEN	13.80	1.0000	1.0031
24150	ULTRAGEN	13.80	1	1	41.6	0.0	9.8	0.0	24150	ULTRAGE	13.80	1.0000	1.0072
24159	WILLAMET	13.80	1	1	25.3	1.2	15.0	0.0	24159	WILLAME	13.80	1.0000	1.0000
24160	VALLEYSC	115.00	1	0	0.0	0.1	0.1	0.0	24160	VALLEYS	115.00	0.9830	1.0872
24152	VESTAL	66.00	1	0	0.0	0.0	25.0	-12.5	24152	VESTAL	66.00	1.0300	1.0076
24902	VSTA	66.00	1	0	0.0	0.0	1.5	-0.8	24902	VSTA	66.00	1.0230	1.0136
24319	EASTWOOD	13.80	1	1	209.9	19.4	97.0	-50.0	24319	EASTWOO	13.80	1.0000	1.0000
24306	B CRK1-1	7.90	1	1	7.1	7.2	7.2	-3.1	24306	B CRK1-	7.90	1.0000	0.9523
24306	B CRK1-1	7.90	2	1	7.1	6.1	6.1	-2.8	24306	B CRK1-	7.90	1.0000	0.9523
24307	B CRK1-2	13.20	3	1	17.2	-1.9	6.8	-2.2	24307	B CRK1-	13.20	1.0000	1.0000
24307	B CRK1-2	13.20	4	1	15.2	-1.6	5.0	-2.0	24307	B CRK1-	13.20	1.0000	1.0000
24308	B CRK2-1	13.80	1	1	40.6	12.6	26.4	-35.0	24308	B CRK2-	13.80	1.0000	1.0000
24308	B CRK2-1	13.80	2	1	40.6	12.6	28.5	-35.0	24308	B CRK2-	13.80	1.0000	1.0000
24309	B CRK2-2	7.60	3	1	15.2	6.0	6.0	-4.0	24309	B CRK2-	7.60	1.0000	0.9889
24309	B CRK2-2	7.60	4	1	15.2	6.0	6.0	-4.0	24309	B CRK2-	7.60	1.0000	0.9889
24310	B CRK2-3	6.60	5	1	16.2	-1.7	4.4	-2.7	24310	B CRK2-	6.60	1.0000	1.0000
24310	B CRK2-3	6.60	6	1	18.3	-1.9	5.0	-2.7	24310	B CRK2-	6.60	1.0000	1.0000
24311	B CRK3-1	13.80	1	1	24.3	10.0	10.0	-8.3	24311	B CRK3-	13.80	1.0000	0.9627
24311	B CRK3-1	13.80	2	1	24.3	10.0	10.0	-7.0	24311	B CRK3-	13.80	1.0000	0.9627
24312	B CRK3-2	13.80	3	1	24.3	10.0	10.0	-7.0	24312	B CRK3-	13.80	1.0000	1.0000

2009 Heavy Summer - Pre Case
CASE NAME: Vpp09hsBaseCase914.

BUS-NO	NAME1	KV1	ID	ST	PGEN	QGEN	QMX	QMN	IREG	NAME2	KV2	VSCHED	V-ACT
24312	B CRK3-2	13.80	4	1	30.4	13.4	13.5	-7.5	24312	B CRK3-	13.80	1.0000	1.0000
24313	B CRK3-3	13.80	5	1	36.5	12.6	17.5	-10.0	24313	B CRK3-	13.80	1.0000	1.0000
24314	B CRK 4	12.00	41	0	40.0	10.2	10.2	-10.0	24314	B CRK 4	12.00	1.0000	1.0000
24314	B CRK 4	12.00	42	0	32.0	13.6	13.6	-10.4	24314	B CRK 4	12.00	1.0000	1.0000
24315	B CRK 8	13.80	81	0	25.0	5.5	5.5	-2.5	24315	B CRK 8	13.80	1.0000	0.9762
24315	B CRK 8	13.80	82	0	38.0	5.5	5.5	-2.5	24315	B CRK 8	13.80	1.0000	0.9762
24317	MAMOTH1G	13.80	1	1	94.3	22.6	26.4	-35.0	24317	MAMOTH1	13.80	1.0000	1.0000
24318	MAMOTH2G	13.80	2	1	94.3	22.4	28.5	-35.0	24318	MAMOTH2	13.80	1.0000	1.0000
25411	EAGLEMP1	6.90	1	1	-9.4	0.3	0.5	0.0	25411	EAGLEMP	6.90	1.0000	1.0030
25411	EAGLEMP1	6.90	2	1	-9.4	0.3	0.5	0.0	25411	EAGLEMP	6.90	1.0000	1.0030
25411	EAGLEMP1	6.90	3	1	-9.4	0.3	0.5	0.0	25411	EAGLEMP	6.90	1.0000	1.0030
25411	EAGLEMP1	6.90	4	1	-9.4	0.3	0.5	0.0	25411	EAGLEMP	6.90	1.0000	1.0030
25412	EAGLEMP2	6.90	5	0	0.0	0.5	0.5	0.0	25412	EAGLEMP	6.90	1.0000	1.0030
25412	EAGLEMP2	6.90	6	1	-9.4	0.3	0.5	0.0	25412	EAGLEMP	6.90	1.0000	1.0030
25412	EAGLEMP2	6.90	7	1	-9.4	0.3	0.5	0.0	25412	EAGLEMP	6.90	1.0000	1.0030
25412	EAGLEMP2	6.90	8	1	-9.4	0.3	0.5	0.0	25412	EAGLEMP	6.90	1.0000	1.0030
25412	EAGLEMP2	6.90	9	1	-9.4	0.3	0.5	0.0	25412	EAGLEMP	6.90	1.0000	1.0030
25413	GENE P1	6.90	1	1	-6.8	0.1	0.2	0.0	25413	GENE P	6.90	1.0000	1.0060
25413	GENE P1	6.90	2	1	-6.8	0.1	0.2	0.0	25413	GENE P	6.90	1.0000	1.0060
25413	GENE P1	6.90	3	1	-6.8	0.1	0.2	0.0	25413	GENE P	6.90	1.0000	1.0060
25413	GENE P1	6.90	4	1	-6.8	0.1	0.2	0.0	25413	GENE P	6.90	1.0000	1.0060
25414	GENE P2	6.90	5	0	0.0	0.1	0.2	0.0	25414	GENE P	6.90	1.0000	0.9970
25414	GENE P2	6.90	6	1	-6.8	0.1	0.2	0.0	25414	GENE P	6.90	1.0000	0.9970
25414	GENE P2	6.90	7	1	-6.8	0.1	0.2	0.0	25414	GENE P	6.90	1.0000	0.9970
25414	GENE P2	6.90	8	1	-6.8	0.1	0.2	0.0	25414	GENE P	6.90	1.0000	0.9970
25414	GENE P2	6.90	9	1	-6.8	0.1	0.2	0.0	25414	GENE P	6.90	1.0000	0.9970
25415	INTAKEP1	6.90	1	1	-6.8	0.1	0.2	0.0	25415	INTAKEP	6.90	1.0000	0.9910
25415	INTAKEP1	6.90	2	1	-6.8	0.1	0.2	0.0	25415	INTAKEP	6.90	1.0000	0.9910
25415	INTAKEP1	6.90	3	1	-6.8	0.1	0.2	0.0	25415	INTAKEP	6.90	1.0000	0.9910
25415	INTAKEP1	6.90	4	1	-6.8	0.1	0.2	0.0	25415	INTAKEP	6.90	1.0000	0.9910
25416	INTAKEP2	6.90	5	0	0.0	0.1	0.2	0.0	25416	INTAKEP	6.90	1.0000	0.9853
25416	INTAKEP2	6.90	6	1	-6.8	0.1	0.2	0.0	25416	INTAKEP	6.90	1.0000	0.9853
25416	INTAKEP2	6.90	7	1	-6.8	0.1	0.2	0.0	25416	INTAKEP	6.90	1.0000	0.9853
25416	INTAKEP2	6.90	8	1	-6.8	0.1	0.2	0.0	25416	INTAKEP	6.90	1.0000	0.9853
25416	INTAKEP2	6.90	9	1	-6.8	0.1	0.2	0.0	25416	INTAKEP	6.90	1.0000	0.9853
25417	IRONMTP1	6.90	1	1	-3.2	0.1	0.2	0.0	25417	IRONMTP	6.90	1.0000	1.0132
25417	IRONMTP1	6.90	2	1	-3.2	0.1	0.2	0.0	25417	IRONMTP	6.90	1.0000	1.0132
25417	IRONMTP1	6.90	3	1	-3.2	0.1	0.2	0.0	25417	IRONMTP	6.90	1.0000	1.0132
25417	IRONMTP1	6.90	4	1	-3.2	0.1	0.2	0.0	25417	IRONMTP	6.90	1.0000	1.0132
25418	IRONMTP2	6.90	5	0	0.0	0.1	0.2	0.0	25418	IRONMTP	6.90	1.0000	1.0132
25418	IRONMTP2	6.90	6	1	-3.2	0.1	0.2	0.0	25418	IRONMTP	6.90	1.0000	1.0132
25418	IRONMTP2	6.90	7	1	-3.2	0.1	0.2	0.0	25418	IRONMTP	6.90	1.0000	1.0132
25418	IRONMTP2	6.90	8	1	-3.2	0.1	0.2	0.0	25418	IRONMTP	6.90	1.0000	1.0132
25418	IRONMTP2	6.90	9	1	-3.2	0.1	0.2	0.0	25418	IRONMTP	6.90	1.0000	1.0132
25419	JHINDSP1	6.90	1	1	-9.4	0.3	0.5	0.0	25419	JHINDSP	6.90	1.0000	1.0078
25419	JHINDSP1	6.90	2	1	-9.4	0.3	0.5	0.0	25419	JHINDSP	6.90	1.0000	1.0078
25419	JHINDSP1	6.90	3	1	-9.4	0.3	0.5	0.0	25419	JHINDSP	6.90	1.0000	1.0078
25419	JHINDSP1	6.90	4	1	-9.4	0.3	0.5	0.0	25419	JHINDSP	6.90	1.0000	1.0078
25420	JHINDSP2	6.90	5	0	0.0	0.5	0.5	0.0	25420	JHINDSP	6.90	1.0000	1.0078
25422	ETI MWDG	13.80	1	1	6.8	-7.1	15.1	-14.6	25422	ETI MWD	13.80	1.0000	1.0000
25420	JHINDSP2	6.90	6	1	-9.4	0.3	0.5	0.0	25420	JHINDSP	6.90	1.0000	1.0078
25420	JHINDSP2	6.90	7	1	-9.4	0.3	0.5	0.0	25420	JHINDSP	6.90	1.0000	1.0078
25420	JHINDSP2	6.90	8	1	-9.4	0.3	0.5	0.0	25420	JHINDSP	6.90	1.0000	1.0078
25420	JHINDSP2	6.90	9	1	-9.4	0.3	0.5	0.0	25420	JHINDSP	6.90	1.0000	1.0078
25424	ESRP P1	6.90	1	1	-4.6	0.1	0.2	0.0	25424	ESRP P1	6.90	1.0000	1.0843
25424	ESRP P1	6.90	2	1	-4.6	0.1	0.2	0.0	25424	ESRP P1	6.90	1.0000	1.0843
25424	ESRP P1	6.90	3	1	-4.6	0.1	0.2	0.0	25424	ESRP P1	6.90	1.0000	1.0843
25424	ESRP P1	6.90	4	1	-4.6	0.1	0.2	0.0	25424	ESRP P1	6.90	1.0000	1.0843
25425	ESRP P2	6.90	5	0	0.0	0.1	0.2	0.0	25425	ESRP P2	6.90	1.0000	1.0853
25425	ESRP P2	6.90	6	0	0.0	0.1	0.2	0.0	25425	ESRP P2	6.90	1.0000	1.0853

2009 Heavy Summer - Pre Case
CASE NAME: Vpp09hsBaseCase914.

BUS-NO	NAME1	KV1	ID	ST	PGEN	QGEN	QMX	QMN	IREG	NAME2	KV2	VSCHED	V-ACT
25425	ESRP P2	6.90	7	0	0.0	0.1	0.2	0.0	25425	ESRP P2	6.90	1.0000	1.0853
25425	ESRP P2	6.90	8	0	0.0	0.1	0.2	0.0	25425	ESRP P2	6.90	1.0000	1.0853
25426	ESRP P3	6.90	9	0	0.0	0.1	0.2	0.0	25426	ESRP P3	6.90	1.0000	1.0853
25426	ESRP P3	6.90	10	0	0.0	0.1	0.2	0.0	25426	ESRP P3	6.90	1.0000	1.0853
25426	ESRP P3	6.90	11	0	0.0	0.1	0.2	0.0	25426	ESRP P3	6.90	1.0000	1.0853
25426	ESRP P3	6.90	12	0	0.0	0.1	0.2	0.0	25426	ESRP P3	6.90	1.0000	1.0853
25614	OSO A P	13.20	1	1	-12.2	0.5	1.0	0.0	25614	OSO A	13.20	1.0000	1.0253
25614	OSO A P	13.20	2	0	0.0	0.5	1.0	0.0	25614	OSO A	13.20	1.0000	1.0253
25614	OSO A P	13.20	3	0	0.0	0.0	1.0	0.0	25614	OSO A	13.20	1.0000	1.0253
25614	OSO A P	13.20	4	0	0.0	-1.3	1.0	0.0	25614	OSO A	13.20	1.0000	1.0253
25615	OSO B P	13.20	5	0	0.0	0.5	1.0	0.0	25615	OSO B	13.20	1.0000	1.0245
25615	OSO B P	13.20	6	0	0.0	0.5	1.0	0.0	25615	OSO B	13.20	1.0000	1.0245
25615	OSO B P	13.20	7	0	0.0	0.5	1.0	0.0	25615	OSO B	13.20	1.0000	1.0245
25615	OSO B P	13.20	8	0	0.0	0.5	1.0	0.0	25615	OSO B	13.20	1.0000	1.0245
24457	ARBWIND	66.00	1	0	0.0	-8.9	-8.9	-8.9	24457	ARBWIND	66.00	1.0100	0.9579
24458	ENCANWND	66.00	1	0	0.0	-17.6	-17.6	-17.6	24458	ENCANWN	66.00	1.0100	0.9624
24459	FLOWIND	66.00	1	0	0.0	-14.2	-14.2	-14.2	24459	FLOWIND	66.00	1.0100	0.9636
24460	DUTCHWND	66.00	1	0	0.0	-6.5	-6.5	-6.5	24460	DUTCHWN	66.00	1.0100	0.9647
24461	S.OAKWND	66.00	1	0	0.0	-10.1	-10.1	-10.1	24461	S.OAKWN	66.00	1.0100	0.9640
24462	NORTHWND	66.00	1	0	0.0	-7.5	-7.5	-7.5	24462	NORTHWN	66.00	1.0100	0.9596
24463	ZONDWIND	66.00	1	0	0.0	-11.0	-11.0	-11.0	24463	ZONDWIN	66.00	1.0100	0.9596
24408	BREEZE	66.00	1	0	0.0	-4.6	-4.6	-4.6	24408	BREEZE	66.00	1.0100	0.9518
24436	GOLDTOWN	66.00	1	0	0.0	-3.8	-3.8	-3.8	24436	GOLDTOW	66.00	1.0100	0.9643
24437	KERNRVR	66.00	1	1	15.2	0.0	0.0	0.0	24437	KERNRVR	66.00	1.0100	1.0074
24464	MIDWIND	66.00	1	0	0.0	-5.0	-5.0	-5.0	24464	MIDWIND	66.00	1.0100	0.9630
24465	MORWIND	66.00	1	0	0.0	-32.0	-32.0	-32.0	24465	MORWIND	66.00	1.0100	0.9655
25632	TERAWND	115.00	1	0	22.5	-11.3	-11.3	-11.3	25632	TERAWND	115.00	1.0000	1.0056
25633	CAPWIND	115.00	1	0	20.0	-10.0	-10.0	-10.0	25633	CAPWIND	115.00	1.0000	1.0904
25634	BUCKWND	115.00	1	0	17.1	-6.5	-6.5	-6.5	25634	BUCKWND	115.00	1.0000	1.0047
25635	ALTWIND	115.00	1	0	48.0	-25.0	-25.0	-25.0	25635	ALTWIND	115.00	1.0000	1.0032
25636	RENWIND	115.00	1	0	12.6	-6.0	-6.0	-6.0	25636	RENWIND	115.00	1.0000	1.0054
25637	TRANWND	115.00	1	0	40.0	-11.5	-11.5	-11.5	25637	TRANWND	115.00	1.0000	1.0058
25639	SEAWIND	115.00	1	1	27.4	-13.5	-13.5	-13.5	25639	SEAWIND	115.00	1.0000	1.0038
25640	PANAERO	115.00	1	0	30.0	-13.5	-13.5	-13.5	25640	PANAERO	115.00	1.0000	1.0038
25645	VENWIND	115.00	1	0	44.8	-5.7	-5.7	-5.7	25645	VENWIND	115.00	1.0000	1.0056
25646	SANWIND	115.00	1	0	28.0	-13.5	-13.5	-13.5	25646	SANWIND	115.00	1.0000	1.0046
24783	RUSH	2.30	1	1	15.2	4.6	5.0	-2.5	24783	RUSH	2.30	1.0000	1.0000
24784	POOLUWD	6.90	1	0	13.0	3.3	6.5	-3.0	24784	POOLUWD	6.90	1.0000	0.9559
24732	KERRGEN	12.50	1	1	3.0	3.0	27.0	-14.0	24732	KERRGEN	12.50	1.0000	1.0000
24733	KERRMGEE	13.80	1	1	55.8	7.0	7.0	-3.0	24733	KERRMGE	13.80	1.0000	0.9960
24826	INDIGO	115.00	1	0	0.0	-6.0	-6.0	-6.0	24826	INDIGO	115.00	1.0000	1.0055
25651	WARNE1	13.80	1	1	38.5	12.2	12.2	-12.3	25651	WARNE1	13.80	1.0000	0.9980
25652	WARNE2	13.80	1	1	38.5	12.2	12.2	-12.3	25652	WARNE2	13.80	1.0000	0.9980
25653	ALAMO SC	13.80	1	1	4.1	-3.1	6.0	-6.0	25653	ALAMO S	13.80	1.0000	1.0000
24133	SANTIAGO	66.00	1	0	0.0	-3.4	8.5	-4.3	24133	SANTIAG	66.00	1.0450	1.0268
24127	S.CLARA	66.00	1	0	0.0	-3.4	24.5	-12.3	24127	S.CLARA	66.00	1.0080	0.9993
28190	WINTECX2	13.80	1	1	45.9	0.1	28.0	-28.0	28190	WINTECX	13.80	1.0000	1.0000
28191	WINTECX1	13.80	1	1	45.9	0.1	28.0	-28.0	28191	WINTECX	13.80	1.0000	1.0000
28180	WINTEC8	13.80	1	1	45.9	0.1	28.0	-28.0	28180	WINTEC8	13.80	1.0000	1.0000
24062	HARBOR13	13.80	1	1	91.3	-7.2	40.0	-20.0	24062	HARBOR1	13.80	1.0000	1.0000
25510	HARBORG4	4.16	LP	1	10.1	-2.0	7.0	-2.0	24062	HARBOR1	13.80	1.0000	1.0000
24062	HARBOR13	13.80	HP	1	10.1	-0.8	7.0	-2.0	24062	HARBOR1	13.80	1.0000	1.0000
24815	GARNET	115.00	EQ	0	101.4	-50.7	-50.7	-50.7	24815	GARNET	115.00	1.0000	1.0045
28020	WINTEC6	115.00	1	1	45.6	-15.0	-15.0	-15.0	28020	WINTEC6	115.00	1.0000	1.0047
28060	SEAWEST	115.00	1	0	44.4	-14.8	-14.8	-14.8	28060	SEAWEST	115.00	1.0000	1.0032
28060	SEAWEST	115.00	2	0	45.0	-15.0	-15.0	-15.0	28060	SEAWEST	115.00	1.0000	1.0032
28061	WDT092	33.00	1	0	66.0	-22.0	-22.0	-22.0	28061	WDT092	33.00	1.0000	1.0503
28260	ALTAMSA4	115.00	1	0	40.0	-13.3	-13.3	-13.3	28260	ALTAMSA	115.00	1.0000	1.0038
28280	WDT053	33.00	1	0	42.9	-14.3	-14.3	-14.3	28280	WDT053	33.00	1.0000	1.0058
28000	TOT005ST	20.00	1	0	210.0	32.6	160.0	-90.0	24350	TOT005	230.00	1.0000	1.0031

2009 Heavy Summer - Pre Case
CASE NAME: Vpp09hsBaseCase914.

BUS-NO	NAME1	KV1	ID	ST	PGEN	QGEN	QMX	QMN	IREG	NAME2	KV2	VSCHED	V-ACT
28001	TOT005CT	15.00	1	0	180.0	32.6	80.0	-60.0	24350	TOT005	230.00	1.0000	1.0031
28002	TOT005CT	15.00	1	0	180.0	32.6	80.0	-60.0	24350	TOT005	230.00	1.0000	1.0031
28003	TOT005CT	15.00	1	0	180.0	32.6	80.0	-60.0	24350	TOT005	230.00	1.0000	1.0031
24718	ALTA31GT	13.80	31	1	60.8	2.3	41.0	-30.0	24718	ALTA31G	13.80	1.0000	1.0000
24719	ALTA 3ST	13.80	3	1	109.5	-1.5	58.0	-41.0	24719	ALTA 3S	13.80	1.0000	1.0000
24720	ALTA41GT	13.80	41	1	66.9	3.2	41.0	-30.0	24720	ALTA41G	13.80	1.0000	1.0000
24721	ALTA 4ST	13.80	4	0	0.0	-7.9	58.0	-41.0	24721	ALTA 4S	13.80	1.0000	1.0034
24734	ALTA32GT	13.80	32	0	0.0	1.2	41.0	-30.0	24734	ALTA32G	13.80	1.0000	1.0034
24735	ALTA42GT	13.80	42	0	0.0	1.2	41.0	-30.0	24735	ALTA42G	13.80	1.0000	1.0034
24921	TOT109-C	18.00	1	0	162.0	35.2	115.0	-61.0	24921	TOT109-	18.00	1.0300	1.0136
24922	TOT109-C	18.00	1	1	189.6	36.3	115.0	-61.0	24922	TOT109-	18.00	1.0300	1.0300
24923	TOT109-S	18.00	1	1	189.6	38.8	200.0	-100.0	24923	TOT109-	18.00	1.0300	1.0300
24924	TOT109-C	18.00	1	1	189.6	36.2	115.0	-61.0	24924	TOT109-	18.00	1.0300	1.0300
24925	TOT109-C	18.00	1	0	162.0	30.6	115.0	-61.0	24925	TOT109-	18.00	1.0300	1.0136
24926	TOT109-S	18.00	1	1	189.6	39.1	200.0	-100.0	24926	TOT109-	18.00	1.0300	1.0300
24999	DEVRSVC1	500.00	1	0	0.0	0.1	0.1	0.0	24999	DEVRSVC	500.00	1.0222	1.0887
24927	AES1	13.80	1	1	109.7	-7.8	25.0	-15.0	24927	AES1	13.80	1.0000	1.0000
24928	AES2	13.80	2	1	109.7	-7.8	25.0	-15.0	24928	AES2	13.80	1.0000	1.0000
24929	AES3	13.80	3	1	109.7	-7.8	25.0	-15.0	24929	AES3	13.80	1.0000	1.0000
24999	DEVRSVC1	500.00	2	0	0.0	0.1	0.1	0.0	24999	DEVRSVC	500.00	1.0222	1.0887
25711	TOT1201	0.57	1	0	25.5	2.4	8.4	-12.4	25711	TOT1201	0.57	1.0000	1.0061
25712	TOT1202	0.57	1	0	24.0	2.1	7.9	-11.6	25712	TOT1202	0.57	1.0000	1.0061
25713	TOT1203	0.57	1	0	25.5	1.8	8.4	-12.4	25713	TOT1203	0.57	1.0000	1.0061
25714	TOT1204	0.57	1	0	25.5	1.6	8.4	-12.4	25714	TOT1204	0.57	1.0000	1.0061
24234	RECTRSVC	230.00	1	1	0.0	0.1	0.1	0.0	24234	RECTRSV	230.00	1.0000	0.9497
28041	TOT139C1	19.50	1	0	101.2	23.4	280.0	-200.0	28041	TOT139C	19.50	1.0460	1.0375
28042	TOT139C2	19.50	2	0	405.0	54.9	280.0	-200.0	28042	TOT139C	19.50	1.0460	1.0375
24998	RERC	66.00	1	1	48.7	-0.8	15.0	-0.8	24998	RERC	66.00	0.9804	1.0192
24998	RERC	66.00	2	1	48.7	-0.8	15.0	-0.8	24998	RERC	66.00	0.9804	1.0192
28169	WDT179	13.80	1	0	49.9	6.2	16.4	-24.2	28169	WDT179	13.80	1.0000	1.0135
24075	LAGUBELL	66.00	wc	1	50.6	-24.2	16.4	-24.2	24075	LAGUBEL	66.00	1.0150	1.0241
24902	VSTA	66.00	3	0	49.0	15.0	15.0	-12.5	24902	VSTA	66.00	1.0230	1.0136
28201	TOT135G1	13.80	1	1	101.5	30.7	81.7	-48.0	28201	TOT135G	13.80	1.0000	1.0000
28888	WDT188	13.80	1	0	49.9	-14.9	16.4	-24.2	28888	WDT188	13.80	1.0000	1.0332
28057	TOT139G1	15.00	1	0	184.0	145.5	138.0	-92.0	28056	TOT139D	230.00	0.9675	1.0079
28058	TOT139G2	15.00	2	0	184.0	-92.0	138.0	-92.0	28056	TOT139D	230.00	0.9675	1.0079
28059	TOT139G3	15.00	3	0	184.0	-92.0	138.0	-92.0	28056	TOT139D	230.00	0.9675	1.0079
28203	TOT135G3	13.80	1	1	101.5	30.7	81.7	-48.0	28203	TOT135G	13.80	1.0000	1.0000
28204	TOT135G4	13.80	1	1	101.5	30.7	81.7	-48.0	28204	TOT135G	13.80	1.0000	1.0000
28205	TOT135G5	13.80	1	1	101.5	30.7	81.7	-48.0	28205	TOT135G	13.80	1.0000	1.0000
28202	TOT135G2	13.80	1	1	101.5	30.7	81.7	-48.0	28202	TOT135G	13.80	1.0000	1.0000
28213	WDT182G1	13.80	1	1	102.9	-27.8	80.0	-50.0	28213	WDT182G	13.80	1.0000	1.0000
28214	WDT182G2	13.80	1	1	102.9	-27.8	80.0	-50.0	28214	WDT182G	13.80	1.0000	1.0000
28215	WDT182G3	13.80	1	1	102.9	-27.8	80.0	-50.0	28215	WDT182G	13.80	1.0000	1.0000
28216	WDT182G4	13.80	1	1	102.9	-27.8	80.0	-50.0	28216	WDT182G	13.80	1.0000	1.0000
28217	WDT182G5	13.80	1	1	102.9	-27.8	80.0	-50.0	28217	WDT182G	13.80	1.0000	1.0000
28104	TOT032S1	22.00	S1	1	337.0	95.2	195.0	-120.0	28104	TOT032S	22.00	1.0200	1.0200
28103	TOT032G3	18.00	G3	1	169.0	49.5	90.0	-70.0	28103	TOT032G	18.00	1.0200	1.0200
28102	TOT032G2	18.00	G2	1	169.0	49.5	90.0	-70.0	28102	TOT032G	18.00	1.0200	1.0200
28101	TOT032G1	18.00	G1	1	169.0	49.5	90.0	-70.0	28101	TOT032G	18.00	1.0200	1.0200
28220	TOT138G2	15.00	2	1	204.8	65.9	103.0	-51.0	28220	TOT138G	15.00	1.0300	1.0300
28219	TOT138G1	15.00	1	1	204.8	65.9	103.0	-51.0	28219	TOT138G	15.00	1.0300	1.0300
25500	P500_G5	18.00	5	1	172.4	28.6	60.0	-60.0	25500	P500_G5	18.00	1.0300	1.0300
25501	P500_G6	18.00	6	1	172.4	28.6	60.0	-60.0	25501	P500_G6	18.00	1.0300	1.0300
25502	P500_S7	18.00	7	1	283.9	44.3	160.0	-80.0	25502	P500_S7	18.00	1.0300	1.0300
24157	WALNUT	66.00	WP	1	50.6	16.4	16.4	-24.2	24157	WALNUT	66.00	1.0380	1.0213
99112	ELSNORE2	16.00	1	1	254.8	-82.9	122.0	-122.0	99112	ELSNORE	16.00	1.0000	1.0000
99110	ELSNORE1	16.00	1	1	254.8	-82.9	122.0	-122.0	99110	ELSNORE	16.00	1.0000	1.0000
24856	WDT213G1	0.60	1	0	25.0	-9.3	-9.3	-9.3	24856	WDT213G	0.60	1.0000	1.0057
24857	WDT213G2	0.60	1	0	24.0	-8.0	-8.0	-8.0	24857	WDT213G	0.60	1.0000	1.0057

2009 Heavy Summer - Pre Case
CASE NAME: Vpp09hsBaseCase914.

BUS-NO	NAME1	KV1	ID	ST	PGEN	QGEN	QMX	QMN	IREG	NAME2	KV2	VSCHED	V-ACT
28296	TOT166C1	16.50	1	1	232.7	75.4	75.4	-111.2	28296	TOT166C	16.50	1.0364	1.0008
28297	TOT166C2	16.50	2	1	232.7	75.4	75.4	-111.2	28297	TOT166C	16.50	1.0364	1.0008
28298	TOT166S	18.00	1	1	303.9	98.5	98.5	-145.2	28298	TOT166S	18.00	1.0364	1.0008
24401	ANTELOPE	230.00	1	1	1288.7	-424.0	-424.0	-424.0	24401	ANTELOP	230.00	1.0200	0.9690
29700	TEH_GENS	230.00	1	1	3012.4	-7.3	200.0	-200.0	29700	TEH_GEN	230.00	1.0000	1.0000

** gens ** Page 1 [vpp09hspost914.sav] Thu Sep 07 13:38:24 2006

2009 Heavy Summer - Vernon Power Plant 914 MW
CASE NAME: Vpp09hsPost914.sav

BUS-NO	NAME1	KV1	ID	ST	PGEN	QGEN	QMX	QMN	IREG	NAME2	KV2	VSCHED	V-ACT
24656	VERNNST1	19.00	1	1	358.3	32.6	174.0	-114.0	24656	VERNNST	19.00	0.9977	0.9977
24654	VERNNCT3	15.00	1	1	193.3	23.1	95.9	-65.1	24654	VERNNCT	15.00	0.9977	0.9977
24652	VERNNCT2	15.00	1	1	193.3	23.1	95.9	-65.1	24652	VERNNCT	15.00	0.9977	0.9977
24651	VERNNCT1	15.00	1	1	193.3	23.1	95.9	-65.1	24651	VERNNCT	15.00	0.9977	0.9977
24456	BOREL	66.00	1	0	10.0	0.0	5.0	-2.5	24456	BOREL	66.00	1.0000	0.9519
28055	TOT018S2	18.00	S2	1	79.5	12.2	53.0	-38.0	28055	TOT018S	18.00	1.0000	1.0000
28054	TOT018G3	18.00	G3	1	173.9	26.9	105.0	-76.0	28054	TOT018G	18.00	1.0000	1.0000
28053	TOT018S1	18.00	S1	1	178.9	28.0	109.0	-78.0	28053	TOT018S	18.00	1.0000	1.0000
28052	TOT018G2	18.00	G2	1	173.9	26.9	105.0	-76.0	28052	TOT018G	18.00	1.0000	1.0000
28051	TOT018G1	18.00	G1	1	173.9	26.9	105.0	-76.0	28051	TOT018G	18.00	1.0000	1.0000
24001	ALAMT1 G	18.00	1	1	173.9	-50.0	75.0	-50.0	24001	ALAMT1	18.00	1.0000	1.0044
24002	ALAMT2 G	18.00	2	1	173.9	-50.0	75.0	-50.0	24002	ALAMT2	18.00	1.0000	1.0044
24003	ALAMT3 G	18.00	3	1	298.2	42.4	150.0	-100.0	24003	ALAMT3	18.00	1.0000	1.0000
24004	ALAMT4 G	18.00	4	1	298.2	42.4	150.0	-100.0	24004	ALAMT4	18.00	1.0000	1.0000
24005	ALAMT5 G	20.00	5	1	447.3	19.8	240.0	-120.0	24005	ALAMT5	20.00	1.0000	1.0000
24161	ALAMT6 G	20.00	6	1	447.3	19.8	210.0	-150.0	24161	ALAMT6	20.00	1.0000	1.0000
24162	ALAMT7 G	16.00	7	0	0.0	50.0	50.0	-25.0	24162	ALAMT7	16.00	1.0250	1.0138
25203	ANAHEIMG	13.80	1	0	0.0	11.7	25.0	-12.0	25203	ANAHEIM	13.80	1.0000	0.9942
24009	APPGEN1G	13.80	1	0	0.0	6.4	42.0	0.0	24009	APPGEN1	13.80	1.0000	1.0051
24010	APPGEN2G	13.80	2	0	0.0	6.4	42.0	0.0	24010	APPGEN2	13.80	1.0000	1.0051
24011	ARCO 1G	13.80	1	1	79.5	-1.7	40.0	-20.0	24011	ARCO 1	13.80	1.0000	1.0000
24012	ARCO 2G	13.80	2	1	79.5	-1.7	40.0	-20.0	24012	ARCO 2	13.80	1.0000	1.0000
24013	ARCO 3G	13.80	3	1	79.5	-1.7	40.0	-20.0	24013	ARCO 3	13.80	1.0000	1.0000
24014	ARCO 4G	13.80	4	1	79.5	-1.7	40.0	-20.0	24014	ARCO 4	13.80	1.0000	1.0000
24163	ARCO 5G	13.80	5	1	39.8	-0.1	25.0	-20.0	24163	ARCO 5	13.80	1.0000	1.0000
24164	ARCO 6G	13.80	6	1	39.8	-0.0	25.0	-20.0	24164	ARCO 6	13.80	1.0000	1.0000
24703	BLM E7G	13.80	7	1	19.9	3.4	15.0	-7.5	24703	BLM E7	13.80	1.0000	1.0000
24704	BLM E8G	13.80	8	1	19.9	3.4	15.0	-7.5	24704	BLM E8	13.80	1.0000	1.0000
24705	BLM W9G	13.80	9	1	19.9	3.7	12.0	-6.0	24705	BLM W9	13.80	1.0000	1.0000
24708	BORAX I	13.80	1	1	26.8	-4.9	22.0	-11.0	24708	BORAX I	13.80	1.0000	1.0000
24018	BRIGEN	13.80	1	1	29.8	-8.0	17.0	-8.0	24018	BRIGEN	13.80	1.0000	1.0238
24709	BSPHYD26	2.20	26	1	9.9	1.9	7.0	0.0	24709	BSPHYD2	2.20	1.0000	1.0000
24710	BSPHYD34	2.20	34	1	9.9	0.5	7.0	-3.0	24710	BSPHYD3	2.20	1.0000	1.0000
24711	CALGEN1G	13.80	1	1	29.8	-2.5	15.0	-7.5	24711	CALGEN1	13.80	1.0000	1.0000
24712	CALGEN2G	13.80	2	1	24.8	-2.8	12.0	-6.0	24712	CALGEN2	13.80	1.0000	1.0000
24713	CALGEN3G	13.80	3	1	24.8	-2.8	12.0	-6.0	24713	CALGEN3	13.80	1.0000	1.0000
24020	CARBOGEN	13.80	1	1	33.8	-0.0	17.0	0.0	24020	CARBOGE	13.80	1.0000	1.0510
24022	CHEVGEN1	13.80	1	1	29.8	0.0	19.0	0.0	24022	CHEVGEN	13.80	1.0000	1.0633
24023	CHEVGEN2	13.80	2	1	29.8	0.0	19.0	0.0	24023	CHEVGEN	13.80	1.0000	1.0633
24026	CIMGEN	13.80	1	1	29.8	-0.0	13.0	0.0	24026	CIMGEN	13.80	1.0000	1.0341
24027	COLDGEN	13.80	1	1	27.8	-7.0	14.0	-7.0	24027	COLDGEN	13.80	1.0000	1.0218
24714	ALTA 1G	13.80	1	1	59.6	5.3	32.0	-16.0	24714	ALTA 1	13.80	1.0000	1.0000
24715	ALTA 2G	13.80	2	1	79.5	7.0	40.0	-20.0	24715	ALTA 2	13.80	1.0000	1.0000
24726	CSA DIAB	4.16	1	1	14.9	0.4	15.0	-8.0	24726	CSA DIA	4.16	1.0000	1.0000
24030	DELGEN	13.80	1	1	44.7	-0.0	20.0	0.0	24030	DELGEN	13.80	1.0000	1.0339
25648	DVLCYN1G	13.80	1	1	49.7	-15.0	30.0	-15.0	25648	DVLCYN1	13.80	1.0000	1.0079
25649	DVLCYN2G	13.80	2	1	54.7	-15.0	30.0	-15.0	25649	DVLCYN2	13.80	1.0000	1.0078
25603	DVLCYN3G	13.80	3	1	79.5	-15.0	30.0	-15.0	25603	DVLCYN3	13.80	1.0000	1.0032
25604	DVLCYN4G	13.80	4	1	79.5	-15.0	30.0	-15.0	25604	DVLCYN4	13.80	1.0000	1.0032
25605	EDMON1AP	14.40	1	1	-59.6	0.5	1.0	0.0	25605	EDMON1A	14.40	1.0000	0.9845
25606	EDMON2AP	14.40	2	1	-59.6	0.5	1.0	0.0	25606	EDMON2A	14.40	1.0000	0.9845
25607	EDMON3AP	14.40	3	1	-59.6	0.5	1.0	0.0	25607	EDMON3A	14.40	1.0000	0.9799
25607	EDMON3AP	14.40	4	1	-59.6	0.5	1.0	0.0	25607	EDMON3A	14.40	1.0000	0.9799
25608	EDMON4AP	14.40	5	0	-60.0	0.5	1.0	0.0	25608	EDMON4A	14.40	1.0000	0.9854
25608	EDMON4AP	14.40	6	0	-60.0	0.5	1.0	0.0	25608	EDMON4A	14.40	1.0000	0.9854
25609	EDMON5AP	14.40	7	0	0.0	0.5	1.0	0.0	25609	EDMON5A	14.40	1.0000	0.9854
25609	EDMON5AP	14.40	8	0	0.0	0.5	1.0	0.0	25609	EDMON5A	14.40	1.0000	0.9854
25610	EDMON6AP	14.40	9	0	0.0	0.5	1.0	0.0	25610	EDMON6A	14.40	1.0000	0.9854
25610	EDMON6AP	14.40	10	0	0.0	0.5	1.0	0.0	25610	EDMON6A	14.40	1.0000	0.9854
25611	EDMON7AP	14.40	11	0	0.0	0.5	1.0	0.0	25611	EDMON7A	14.40	1.0000	0.9854

2009 Heavy Summer - Vernon Power Plant 914 MW
CASE NAME: Vpp09hsPost914.sav

BUS-NO	NAME1	KV1	ID	ST	PGEN	QGEN	QMX	QMN	IREG	NAME2	KV2	VSCHED	V-ACT
25611	EDMON7AP	14.40	12	0	0.0	0.5	1.0	0.0	25611	EDMON7A	14.40	1.0000	0.9854
25612	EDMON8AP	14.40	13	0	0.0	0.5	1.0	0.0	25612	EDMON8A	14.40	1.0000	0.9854
25612	EDMON8AP	14.40	14	0	0.0	0.5	1.0	0.0	25612	EDMON8A	14.40	1.0000	0.9854
24045	ELSEG1 G	18.00	1	0	0.0	-18.1	75.0	-50.0	24045	ELSEG1	18.00	1.0300	1.0660
24046	ELSEG2 G	18.00	2	0	0.0	-20.1	75.0	-50.0	24046	ELSEG2	18.00	1.0300	1.0660
24047	ELSEG3 G	18.00	3	1	328.0	47.5	145.0	-100.0	24047	ELSEG3	18.00	1.0300	1.0300
24048	ELSEG4 G	18.00	4	1	328.0	46.9	145.0	-100.0	24048	ELSEG4	18.00	1.0300	1.0300
24050	MTNVIST1	15.50	1	0	0.0	22.2	55.0	-40.0	24050	MTNVIST	15.50	1.0300	1.0553
24051	MTNVIST2	15.50	2	0	0.0	22.2	55.0	-40.0	24051	MTNVIST	15.50	1.0300	1.0553
24052	MTNVIST3	18.00	3	1	318.1	70.8	140.0	-100.0	24052	MTNVIST	18.00	1.0300	1.0300
24053	MTNVIST4	18.00	4	1	318.1	71.4	140.0	-100.0	24053	MTNVIST	18.00	1.0300	1.0300
24054	MTNVIST5	16.00	5	0	0.0	45.9	50.0	-25.0	24054	MTNVIST	16.00	1.0300	1.0182
24060	GROWGEN	13.80	1	1	27.8	-0.0	14.0	0.0	24060	GROWGEN	13.80	1.0000	1.0264
24905	RVCANAL1	13.80	1	0	0.0	1.2	17.0	-10.0	24905	RVCANAL	13.80	1.0000	1.0074
24906	RVCANAL2	13.80	2	0	0.0	1.2	17.0	-10.0	24906	RVCANAL	13.80	1.0000	1.0074
24907	RVCANAL3	13.80	3	0	0.0	2.2	25.0	-15.0	24907	RVCANAL	13.80	1.0000	1.0074
24908	RVCANAL4	13.80	4	0	0.0	2.2	25.0	-15.0	24908	RVCANAL	13.80	1.0000	1.0074
24063	HILLGEN	13.80	1	1	24.8	-0.0	25.0	0.0	24063	HILLGEN	13.80	1.0000	1.0222
24064	HINSON	66.00	1	0	0.0	0.0	23.5	-12.0	24064	HINSON	66.00	1.0150	1.0512
24066	HUNT1 G	13.80	1	1	213.7	52.4	130.0	-65.0	24066	HUNT1	13.80	1.0200	1.0200
24067	HUNT2 G	13.80	2	1	213.7	52.4	130.0	-65.0	24067	HUNT2	13.80	1.0200	1.0200
24167	HUNT3 G	13.80	3	1	198.8	19.4	140.0	-70.0	24167	HUNT3	13.80	1.0000	1.0000
24168	HUNT4 G	13.80	4	1	198.8	19.4	140.0	-70.0	24168	HUNT4	13.80	1.0000	1.0000
24169	HUNT5 G	16.00	5	0	0.0	-5.6	130.0	-25.0	24169	HUNT5	16.00	1.0000	1.0179
24070	ICEGEN	13.80	1	1	24.8	-0.0	22.0	0.0	24070	ICEGEN	13.80	1.0000	1.0349
24071	INLAND	13.80	1	1	29.8	-0.0	15.0	0.0	24071	INLAND	13.80	1.0000	1.0412
24078	LBEACH1G	13.80	1	0	55.0	14.8	30.0	-15.0	24078	LBEACH1	13.80	1.0000	1.0279
24170	LBEACH2G	13.80	2	0	55.0	3.6	30.0	-15.0	24170	LBEACH2	13.80	1.0000	1.0512
24171	LBEACH3G	13.80	3	0	55.0	14.9	30.0	-15.0	24171	LBEACH3	13.80	1.0000	1.0279
24172	LBEACH4G	13.80	4	0	55.0	14.8	30.0	-15.0	24172	LBEACH4	13.80	1.0000	1.0279
24173	LBEACH5G	13.80	5	0	55.0	6.4	30.0	-15.0	24173	LBEACH5	13.80	1.0000	1.0371
24174	LBEACH6G	13.80	6	0	55.0	6.4	30.0	-15.0	24174	LBEACH6	13.80	1.0000	1.0371
24079	LBEACH7G	13.80	7	0	55.0	6.4	30.0	-15.0	24079	LBEACH7	13.80	1.0000	1.0371
24080	LBEACH8G	13.80	8	0	0.0	11.0	48.0	-34.0	24080	LBEACH8	13.80	1.0000	1.0279
24081	LBEACH9G	13.80	9	0	0.0	8.3	30.0	-15.0	24081	LBEACH9	13.80	1.0000	1.0279
24737	LUZ8 G	13.80	8	0	60.0	-0.2	40.0	-20.0	24737	LUZ8 G	13.80	1.0000	1.0054
24738	LUZ9 G	13.80	9	0	60.0	-0.2	40.0	-20.0	24738	LUZ9 G	13.80	1.0000	1.0054
24089	MANDLY1G	13.80	1	0	215.0	62.1	130.0	-67.5	24089	MANDLY1	13.80	1.0000	0.9723
24090	MANDLY2G	13.80	2	0	100.0	45.2	130.0	-67.5	24090	MANDLY2	13.80	1.0000	0.9723
24222	MANDLY3G	16.00	3	0	0.0	3.8	130.0	-67.5	24222	MANDLY3	16.00	1.0000	0.9831
24740	MC GEN	13.80	1	1	54.7	-12.2	75.0	-35.0	24740	MC GEN	13.80	1.0300	1.0300
24094	MOBGEN	13.80	1	1	39.8	-0.0	20.0	0.0	24094	MOBGEN	13.80	1.0000	1.0500
24742	MOGEN G	13.80	1	1	56.7	-3.7	27.0	-13.0	24742	MOGEN	13.80	1.0000	1.0000
24095	MOHAV1CC	22.00	1	0	0.0	25.3	350.0	-150.0	24095	MOHAV1C	22.00	1.0000	1.0249
24096	MOHAV2CC	22.00	2	0	0.0	54.6	350.0	-150.0	24096	MOHAV2C	22.00	1.0000	1.0249
24744	NAVYII4G	13.80	4	1	24.8	4.9	12.0	-6.0	24744	NAVYII4	13.80	1.0000	1.0000
24745	NAVYII5G	13.80	5	1	24.8	4.9	12.0	-6.0	24745	NAVYII5	13.80	1.0000	1.0000
24746	NAVYII6G	13.80	6	1	24.8	4.9	12.0	-6.0	24746	NAVYII6	13.80	1.0000	1.0000
24211	OLINDA	66.00	1	0	0.0	0.0	3.0	-1.8	24211	OLINDA	66.00	1.0450	1.0378
24102	OMAR 1G	13.80	1	1	74.5	0.0	14.3	0.0	24102	OMAR 1	13.80	1.0000	1.0103
24103	OMAR 2G	13.80	2	1	74.5	0.0	14.3	0.0	24103	OMAR 2	13.80	1.0000	1.0103
24104	OMAR 3G	13.80	3	1	74.5	0.0	14.3	0.0	24104	OMAR 3	13.80	1.0000	1.0103
24105	OMAR 4G	13.80	4	1	74.5	-6.5	14.3	-20.0	24105	OMAR 4	13.80	1.0000	1.0000
24107	ORMOND1G	26.00	1	0	750.0	273.0	400.0	-240.0	24107	ORMOND1	26.00	1.0000	1.0000
24108	ORMOND2G	26.00	2	0	750.0	199.3	400.0	-240.0	24108	ORMOND2	26.00	1.0000	1.0000
24747	OXBOW G1	13.80	1	1	52.7	-0.0	27.0	0.0	24747	OXBOW G	13.80	1.0000	1.0072
24110	OXGEN	13.80	1	1	33.8	0.7	17.0	0.0	24110	OXGEN	13.80	1.0000	1.0000
24113	PANDOL	13.80	1	1	54.7	-11.1	25.0	-12.0	24113	PANDOL	13.80	1.0000	1.0000
24422	PALMDALE	66.00	1	0	0.0	-12.0	0.5	-0.3	24422	PALMDAL	66.00	1.0100	0.9836
25617	PEARBMAP	13.20	1	0	0.0	1.0	1.0	0.0	25617	PEARBMA	13.20	1.0000	0.9974

2009 Heavy Summer - Vernon Power Plant 914 MW
CASE NAME: Vpp09hsPost914.sav

BUS-NO	NAME1	KV1	ID	ST	PGEN	QGEN	QMX	QMN	IREG	NAME2	KV2	VSCHED	V-ACT
25617	PEARBMAP	13.20	2	0	0.0	1.0	1.0	0.0	25617	PEARBMA	13.20	1.0000	0.9974
25617	PEARBMAP	13.20	3	0	0.0	1.0	1.0	0.0	25617	PEARBMA	13.20	1.0000	0.9974
25618	PEARBMBP	13.20	4	0	0.0	1.0	1.0	0.0	25618	PEARBMB	13.20	1.0000	0.9974
25618	PEARBMBP	13.20	5	0	0.0	1.0	1.0	0.0	25618	PEARBMB	13.20	1.0000	0.9974
25618	PEARBMBP	13.20	6	0	0.0	1.0	1.0	0.0	25618	PEARBMB	13.20	1.0000	0.9974
25619	PEARBMCP	13.80	7	1	-21.9	0.5	1.0	0.0	25619	PEARBMC	13.80	1.0000	0.9975
25619	PEARBMCP	13.80	8	0	0.0	0.5	1.0	0.0	25619	PEARBMC	13.80	1.0000	0.9975
25620	PEARBMDP	13.80	9	0	0.0	0.5	1.0	0.0	25620	PEARBMD	13.80	1.0000	0.9974
24118	PITCHGEN	13.80	1	1	29.8	0.0	15.0	0.0	24118	PITCHGE	13.80	1.0000	1.0049
24119	PROCGEN	13.80	1	1	50.7	1.1	26.0	0.0	24119	PROCGEN	13.80	1.0000	1.0000
24120	PULPGEN	13.80	1	1	34.8	-0.0	20.0	0.0	24120	PULPGEN	13.80	1.0000	1.0263
24121	REDON5 G	18.00	5	1	159.0	-50.0	75.0	-50.0	24121	REDON5	18.00	1.0300	1.0346
24122	REDON6 G	18.00	6	1	144.1	-50.0	75.0	-50.0	24122	REDON6	18.00	1.0300	1.0378
24123	REDON7 G	20.00	7	1	477.1	209.4	210.0	-150.0	24123	REDON7	20.00	1.0300	1.0300
24124	REDON8 G	20.00	8	1	477.1	210.0	210.0	-150.0	24124	REDON8	20.00	1.0300	1.0300
24252	TOT12810	16.50	1	0	185.0	-8.7	115.0	-95.0	24252	TOT1281	16.50	1.0000	1.0212
24257	TOT12820	16.50	1	0	185.0	-11.4	115.0	-95.0	24257	TOT1282	16.50	1.0000	1.0212
24253	TOT12810	16.50	1	0	185.0	-9.5	115.0	-95.0	24253	TOT1281	16.50	1.0000	1.0212
24258	TOT12820	16.50	1	0	185.0	-9.2	115.0	-95.0	24258	TOT1282	16.50	1.0000	1.0212
24254	TOT12810	21.00	0	0	336.0	-14.0	205.0	-170.0	24254	TOT1281	21.00	1.0000	1.0212
24259	TOT12820	21.00	0	0	336.0	-15.5	205.0	-170.0	24259	TOT1282	21.00	1.0000	1.0212
24914	MTNVIEW1	13.80	1	0	0.0	-1.8	30.0	-15.0	24914	MTNVIEW	13.80	1.0000	1.0082
24915	MTNVIEW2	13.80	2	0	0.0	-1.2	30.0	-15.0	24915	MTNVIEW	13.80	1.0000	1.0082
24129	S.ONOFR2	22.00	2	1	1053.6	316.1	550.0	-410.0	24129	S.ONOFR	22.00	1.0200	1.0200
24130	S.ONOFR3	22.00	3	1	1073.5	316.3	550.0	-410.0	24130	S.ONOFR	22.00	1.0200	1.0200
24136	SEAWEST	230.00	1	0	0.0	12.7	15.0	0.0	24136	SEAWEST	230.00	1.0000	0.9983
24751	SEGS 1G	13.80	1	1	19.9	-5.0	10.0	-5.0	24751	SEGS 1	13.80	1.0000	1.0158
24752	SEGS 2G	13.80	2	1	29.8	-5.0	10.0	-5.0	24752	SEGS 2	13.80	1.0000	1.0135
24139	SERRFGEN	13.80	1	1	32.8	0.0	20.0	0.0	24139	SERRFGE	13.80	1.0000	1.0510
24140	SIMPSON	13.80	1	1	36.8	0.0	20.0	0.0	24140	SIMPSON	13.80	1.0000	1.0340
24754	SUNGEN3G	13.80	3	1	33.8	-0.6	17.0	-8.0	24754	SUNGEN3	13.80	1.0000	1.0000
24755	SUNGEN4G	13.80	4	1	33.8	-0.6	17.0	-8.0	24755	SUNGEN4	13.80	1.0000	1.0000
24756	SUNGEN5G	13.80	5	1	33.8	-0.6	17.0	-8.0	24756	SUNGEN5	13.80	1.0000	1.0000
24757	SUNGEN6G	13.80	6	1	34.8	-0.5	17.0	-8.0	24757	SUNGEN6	13.80	1.0000	1.0000
24758	SUNGEN7G	13.80	7	1	34.8	-0.5	17.0	-8.0	24758	SUNGEN7	13.80	1.0000	1.0000
24143	SYCCYN1G	13.80	1	1	69.6	-0.0	14.3	0.0	24143	SYCCYN1	13.80	1.0000	1.0107
24144	SYCCYN2G	13.80	2	1	69.6	-0.0	14.3	0.0	24144	SYCCYN2	13.80	1.0000	1.0107
24145	SYCCYN3G	13.80	3	1	69.6	-0.0	14.3	0.0	24145	SYCCYN3	13.80	1.0000	1.0107
24146	SYCCYN4G	13.80	4	1	69.6	-0.0	14.3	0.0	24146	SYCCYN4	13.80	1.0000	1.0107
24148	TENNGEN1	13.80	1	1	21.9	0.0	15.0	0.0	24148	TENNGEN	13.80	1.0000	1.0050
24149	TENNGEN2	13.80	2	1	21.9	0.0	15.0	0.0	24149	TENNGEN	13.80	1.0000	1.0050
24150	ULTRAGEN	13.80	1	1	40.8	-0.0	9.8	0.0	24150	ULTRAGE	13.80	1.0000	1.0078
24159	WILLAMET	13.80	1	1	24.8	0.5	15.0	0.0	24159	WILLAME	13.80	1.0000	1.0000
24160	VALLEYSC	115.00	1	0	0.0	0.1	0.1	0.0	24160	VALLEYS	115.00	0.9830	1.0880
24152	VESTAL	66.00	1	0	0.0	0.0	25.0	-12.5	24152	VESTAL	66.00	1.0300	1.0082
24902	VSTA	66.00	1	0	0.0	0.0	1.5	-0.8	24902	VSTA	66.00	1.0230	1.0145
24319	EASTWOOD	13.80	1	1	205.7	17.6	97.0	-50.0	24319	EASTWOO	13.80	1.0000	1.0000
24306	B CRK1-1	7.90	1	1	7.0	7.2	7.2	-3.1	24306	B CRK1-	7.90	1.0000	0.9530
24306	B CRK1-1	7.90	2	1	7.0	6.1	6.1	-2.8	24306	B CRK1-	7.90	1.0000	0.9530
24307	B CRK1-2	13.20	3	1	16.9	-2.1	6.8	-2.2	24307	B CRK1-	13.20	1.0000	1.0000
24307	B CRK1-2	13.20	4	1	14.9	-1.8	5.0	-2.0	24307	B CRK1-	13.20	1.0000	1.0000
24308	B CRK2-1	13.80	1	1	39.8	12.3	26.4	-35.0	24308	B CRK2-	13.80	1.0000	1.0000
24308	B CRK2-1	13.80	2	1	39.8	12.3	28.5	-35.0	24308	B CRK2-	13.80	1.0000	1.0000
24309	B CRK2-2	7.60	3	1	14.9	6.0	6.0	-4.0	24309	B CRK2-	7.60	1.0000	0.9898
24309	B CRK2-2	7.60	4	1	14.9	6.0	6.0	-4.0	24309	B CRK2-	7.60	1.0000	0.9898
24310	B CRK2-3	6.60	5	1	15.9	-1.8	4.4	-2.7	24310	B CRK2-	6.60	1.0000	1.0000
24310	B CRK2-3	6.60	6	1	17.9	-2.0	5.0	-2.7	24310	B CRK2-	6.60	1.0000	1.0000
24311	B CRK3-1	13.80	1	1	23.9	10.0	10.0	-8.3	24311	B CRK3-	13.80	1.0000	0.9636
24311	B CRK3-1	13.80	2	1	23.9	10.0	10.0	-7.0	24311	B CRK3-	13.80	1.0000	0.9636
24312	B CRK3-2	13.80	3	1	23.9	10.0	10.0	-7.0	24312	B CRK3-	13.80	1.0000	1.0000

2009 Heavy Summer - Vernon Power Plant 914 MW
CASE NAME: Vpp09hsPost914.sav

BUS-NO	NAME1	KV1	ID	ST	PGEN	QGEN	QMX	QMN	IREG	NAME2	KV2	VSCHED	V-ACT
24312	B CRK3-2	13.80	4	1	29.8	12.8	13.5	-7.5	24312	B CRK3-	13.80	1.0000	1.0000
24313	B CRK3-3	13.80	5	1	35.8	12.2	17.5	-10.0	24313	B CRK3-	13.80	1.0000	1.0000
24314	B CRK 4	12.00	41	0	40.0	10.2	10.2	-10.0	24314	B CRK 4	12.00	1.0000	1.0000
24314	B CRK 4	12.00	42	0	32.0	13.6	13.6	-10.4	24314	B CRK 4	12.00	1.0000	1.0000
24315	B CRK 8	13.80	81	0	25.0	5.5	5.5	-2.5	24315	B CRK 8	13.80	1.0000	0.9770
24315	B CRK 8	13.80	82	0	38.0	5.5	5.5	-2.5	24315	B CRK 8	13.80	1.0000	0.9770
24317	MAMOTH1G	13.80	1	1	92.4	21.8	26.4	-35.0	24317	MAMOTH1	13.80	1.0000	1.0000
24318	MAMOTH2G	13.80	2	1	92.4	21.6	28.5	-35.0	24318	MAMOTH2	13.80	1.0000	1.0000
25411	EAGLEMP1	6.90	1	1	-9.2	0.3	0.5	0.0	25411	EAGLEMP	6.90	1.0000	1.0042
25411	EAGLEMP1	6.90	2	1	-9.2	0.3	0.5	0.0	25411	EAGLEMP	6.90	1.0000	1.0042
25411	EAGLEMP1	6.90	3	1	-9.2	0.3	0.5	0.0	25411	EAGLEMP	6.90	1.0000	1.0042
25411	EAGLEMP1	6.90	4	1	-9.2	0.3	0.5	0.0	25411	EAGLEMP	6.90	1.0000	1.0042
25412	EAGLEMP2	6.90	5	0	0.0	0.5	0.5	0.0	25412	EAGLEMP	6.90	1.0000	1.0042
25412	EAGLEMP2	6.90	6	1	-9.2	0.3	0.5	0.0	25412	EAGLEMP	6.90	1.0000	1.0042
25412	EAGLEMP2	6.90	7	1	-9.2	0.3	0.5	0.0	25412	EAGLEMP	6.90	1.0000	1.0042
25412	EAGLEMP2	6.90	8	1	-9.2	0.3	0.5	0.0	25412	EAGLEMP	6.90	1.0000	1.0042
25412	EAGLEMP2	6.90	9	1	-9.2	0.3	0.5	0.0	25412	EAGLEMP	6.90	1.0000	1.0042
25413	GENE P1	6.90	1	1	-6.7	0.1	0.2	0.0	25413	GENE P	6.90	1.0000	1.0065
25413	GENE P1	6.90	2	1	-6.7	0.1	0.2	0.0	25413	GENE P	6.90	1.0000	1.0065
25413	GENE P1	6.90	3	1	-6.7	0.1	0.2	0.0	25413	GENE P	6.90	1.0000	1.0065
25413	GENE P1	6.90	4	1	-6.7	0.1	0.2	0.0	25413	GENE P	6.90	1.0000	1.0065
25414	GENE P2	6.90	5	0	0.0	0.1	0.2	0.0	25414	GENE P	6.90	1.0000	0.9979
25414	GENE P2	6.90	6	1	-6.7	0.1	0.2	0.0	25414	GENE P	6.90	1.0000	0.9979
25414	GENE P2	6.90	7	1	-6.7	0.1	0.2	0.0	25414	GENE P	6.90	1.0000	0.9979
25414	GENE P2	6.90	8	1	-6.7	0.1	0.2	0.0	25414	GENE P	6.90	1.0000	0.9979
25414	GENE P2	6.90	9	1	-6.7	0.1	0.2	0.0	25414	GENE P	6.90	1.0000	0.9979
25415	INTAKEP1	6.90	1	1	-6.7	0.1	0.2	0.0	25415	INTAKEP	6.90	1.0000	0.9921
25415	INTAKEP1	6.90	2	1	-6.7	0.1	0.2	0.0	25415	INTAKEP	6.90	1.0000	0.9921
25415	INTAKEP1	6.90	3	1	-6.7	0.1	0.2	0.0	25415	INTAKEP	6.90	1.0000	0.9921
25415	INTAKEP1	6.90	4	1	-6.7	0.1	0.2	0.0	25415	INTAKEP	6.90	1.0000	0.9921
25416	INTAKEP2	6.90	5	0	0.0	0.1	0.2	0.0	25416	INTAKEP	6.90	1.0000	0.9866
25416	INTAKEP2	6.90	6	1	-6.7	0.1	0.2	0.0	25416	INTAKEP	6.90	1.0000	0.9866
25416	INTAKEP2	6.90	7	1	-6.7	0.1	0.2	0.0	25416	INTAKEP	6.90	1.0000	0.9866
25416	INTAKEP2	6.90	8	1	-6.7	0.1	0.2	0.0	25416	INTAKEP	6.90	1.0000	0.9866
25416	INTAKEP2	6.90	9	1	-6.7	0.1	0.2	0.0	25416	INTAKEP	6.90	1.0000	0.9866
25417	IRONMTP1	6.90	1	1	-3.2	0.1	0.2	0.0	25417	IRONMTP	6.90	1.0000	1.0143
25417	IRONMTP1	6.90	2	1	-3.2	0.1	0.2	0.0	25417	IRONMTP	6.90	1.0000	1.0143
25417	IRONMTP1	6.90	3	1	-3.2	0.1	0.2	0.0	25417	IRONMTP	6.90	1.0000	1.0143
25417	IRONMTP1	6.90	4	1	-3.2	0.1	0.2	0.0	25417	IRONMTP	6.90	1.0000	1.0143
25418	IRONMTP2	6.90	5	0	0.0	0.1	0.2	0.0	25418	IRONMTP	6.90	1.0000	1.0143
25418	IRONMTP2	6.90	6	1	-3.2	0.1	0.2	0.0	25418	IRONMTP	6.90	1.0000	1.0143
25418	IRONMTP2	6.90	7	1	-3.2	0.1	0.2	0.0	25418	IRONMTP	6.90	1.0000	1.0143
25418	IRONMTP2	6.90	8	1	-3.2	0.1	0.2	0.0	25418	IRONMTP	6.90	1.0000	1.0143
25418	IRONMTP2	6.90	9	1	-3.2	0.1	0.2	0.0	25418	IRONMTP	6.90	1.0000	1.0143
25419	JHINDSP1	6.90	1	1	-9.2	0.3	0.5	0.0	25419	JHINDSP	6.90	1.0000	1.0090
25419	JHINDSP1	6.90	2	1	-9.2	0.3	0.5	0.0	25419	JHINDSP	6.90	1.0000	1.0090
25419	JHINDSP1	6.90	3	1	-9.2	0.3	0.5	0.0	25419	JHINDSP	6.90	1.0000	1.0090
25419	JHINDSP1	6.90	4	1	-9.2	0.3	0.5	0.0	25419	JHINDSP	6.90	1.0000	1.0090
25420	JHINDSP2	6.90	5	0	0.0	0.5	0.5	0.0	25420	JHINDSP	6.90	1.0000	1.0090
25422	ETI MWDG	13.80	1	1	6.7	-7.4	15.1	-14.6	25422	ETI MWD	13.80	1.0000	1.0000
25420	JHINDSP2	6.90	6	1	-9.2	0.3	0.5	0.0	25420	JHINDSP	6.90	1.0000	1.0090
25420	JHINDSP2	6.90	7	1	-9.2	0.3	0.5	0.0	25420	JHINDSP	6.90	1.0000	1.0090
25420	JHINDSP2	6.90	8	1	-9.2	0.3	0.5	0.0	25420	JHINDSP	6.90	1.0000	1.0090
25420	JHINDSP2	6.90	9	1	-9.2	0.3	0.5	0.0	25420	JHINDSP	6.90	1.0000	1.0090
25424	ESRP P1	6.90	1	1	-4.5	0.1	0.2	0.0	25424	ESRP P1	6.90	1.0000	1.0853
25424	ESRP P1	6.90	2	1	-4.5	0.1	0.2	0.0	25424	ESRP P1	6.90	1.0000	1.0853
25424	ESRP P1	6.90	3	1	-4.5	0.1	0.2	0.0	25424	ESRP P1	6.90	1.0000	1.0853
25424	ESRP P1	6.90	4	1	-4.5	0.1	0.2	0.0	25424	ESRP P1	6.90	1.0000	1.0853
25425	ESRP P2	6.90	5	0	0.0	0.1	0.2	0.0	25425	ESRP P2	6.90	1.0000	1.0861
25425	ESRP P2	6.90	6	0	0.0	0.1	0.2	0.0	25425	ESRP P2	6.90	1.0000	1.0861

2009 Heavy Summer - Vernon Power Plant 914 MW
CASE NAME: Vpp09hsPost914.sav

BUS-NO	NAME1	KV1	ID	ST	PGEN	QGEN	QMX	QMN	IREG	NAME2	KV2	VSCHED	V-ACT
25425	ESRP P2	6.90	7	0	0.0	0.1	0.2	0.0	25425	ESRP P2	6.90	1.0000	1.0861
25425	ESRP P2	6.90	8	0	0.0	0.1	0.2	0.0	25425	ESRP P2	6.90	1.0000	1.0861
25426	ESRP P3	6.90	9	0	0.0	0.1	0.2	0.0	25426	ESRP P3	6.90	1.0000	1.0861
25426	ESRP P3	6.90	10	0	0.0	0.1	0.2	0.0	25426	ESRP P3	6.90	1.0000	1.0861
25426	ESRP P3	6.90	11	0	0.0	0.1	0.2	0.0	25426	ESRP P3	6.90	1.0000	1.0861
25426	ESRP P3	6.90	12	0	0.0	0.1	0.2	0.0	25426	ESRP P3	6.90	1.0000	1.0861
25614	OSO A P	13.20	1	1	-11.9	0.5	1.0	0.0	25614	OSO A	13.20	1.0000	1.0270
25614	OSO A P	13.20	2	0	0.0	0.5	1.0	0.0	25614	OSO A	13.20	1.0000	1.0270
25614	OSO A P	13.20	3	0	0.0	0.0	1.0	0.0	25614	OSO A	13.20	1.0000	1.0270
25614	OSO A P	13.20	4	0	0.0	-1.3	1.0	0.0	25614	OSO A	13.20	1.0000	1.0270
25615	OSO B P	13.20	5	0	0.0	0.5	1.0	0.0	25615	OSO B	13.20	1.0000	1.0261
25615	OSO B P	13.20	6	0	0.0	0.5	1.0	0.0	25615	OSO B	13.20	1.0000	1.0261
25615	OSO B P	13.20	7	0	0.0	0.5	1.0	0.0	25615	OSO B	13.20	1.0000	1.0261
25615	OSO B P	13.20	8	0	0.0	0.5	1.0	0.0	25615	OSO B	13.20	1.0000	1.0261
24457	ARBWIND	66.00	1	0	0.0	-8.9	-8.9	-8.9	24457	ARBWIND	66.00	1.0100	0.9599
24458	ENCANWND	66.00	1	0	0.0	-17.6	-17.6	-17.6	24458	ENCANWN	66.00	1.0100	0.9645
24459	FLOWIND	66.00	1	0	0.0	-14.2	-14.2	-14.2	24459	FLOWIND	66.00	1.0100	0.9656
24460	DUTCHWND	66.00	1	0	0.0	-6.5	-6.5	-6.5	24460	DUTCHWN	66.00	1.0100	0.9667
24461	S.OAKWND	66.00	1	0	0.0	-10.1	-10.1	-10.1	24461	S.OAKWN	66.00	1.0100	0.9661
24462	NORTHWND	66.00	1	0	0.0	-7.5	-7.5	-7.5	24462	NORTHWN	66.00	1.0100	0.9616
24463	ZONDWIND	66.00	1	0	0.0	-11.0	-11.0	-11.0	24463	ZONDWIN	66.00	1.0100	0.9616
24408	BREEZE	66.00	1	0	0.0	-4.6	-4.6	-4.6	24408	BREEZE	66.00	1.0100	0.9538
24436	GOLDTOWN	66.00	1	0	0.0	-3.8	-3.8	-3.8	24436	GOLDTOW	66.00	1.0100	0.9663
24437	KERNRVR	66.00	1	1	14.9	0.0	0.0	0.0	24437	KERNRVR	66.00	1.0100	1.0088
24464	MIDWIND	66.00	1	0	0.0	-5.0	-5.0	-5.0	24464	MIDWIND	66.00	1.0100	0.9651
24465	MORWIND	66.00	1	0	0.0	-32.0	-32.0	-32.0	24465	MORWIND	66.00	1.0100	0.9676
25632	TERAWND	115.00	1	0	22.5	-11.3	-11.3	-11.3	25632	TERAWND	115.00	1.0000	1.0060
25633	CAPWIND	115.00	1	0	20.0	-10.0	-10.0	-10.0	25633	CAPWIND	115.00	1.0000	1.0910
25634	BUCKWND	115.00	1	0	17.1	-6.5	-6.5	-6.5	25634	BUCKWND	115.00	1.0000	1.0051
25635	ALTWIND	115.00	1	0	48.0	-25.0	-25.0	-25.0	25635	ALTWIND	115.00	1.0000	1.0037
25636	RENWIND	115.00	1	0	12.6	-6.0	-6.0	-6.0	25636	RENWIND	115.00	1.0000	1.0058
25637	TRANWND	115.00	1	0	40.0	-11.5	-11.5	-11.5	25637	TRANWND	115.00	1.0000	1.0062
25639	SEAWIND	115.00	1	1	26.8	-13.5	-13.5	-13.5	25639	SEAWIND	115.00	1.0000	1.0041
25640	PANAERO	115.00	1	0	30.0	-13.5	-13.5	-13.5	25640	PANAERO	115.00	1.0000	1.0041
25645	VENWIND	115.00	1	0	44.8	-5.7	-5.7	-5.7	25645	VENWIND	115.00	1.0000	1.0061
25646	SANWIND	115.00	1	0	28.0	-13.5	-13.5	-13.5	25646	SANWIND	115.00	1.0000	1.0050
24783	RUSH	2.30	1	1	14.9	4.4	5.0	-2.5	24783	RUSH	2.30	1.0000	1.0000
24784	POOLUWD	6.90	1	0	13.0	3.3	6.5	-3.0	24784	POOLUWD	6.90	1.0000	0.9570
24732	KERRGEN	12.50	1	1	3.0	3.0	27.0	-14.0	24732	KERRGEN	12.50	1.0000	1.0000
24733	KERRMGEE	13.80	1	1	54.7	7.0	7.0	-3.0	24733	KERRMGE	13.80	1.0000	0.9967
24826	INDIGO	115.00	1	0	0.0	-6.0	-6.0	-6.0	24826	INDIGO	115.00	1.0000	1.0059
25651	WARNE1	13.80	1	1	37.8	12.2	12.2	-12.3	25651	WARNE1	13.80	1.0000	1.0000
25652	WARNE2	13.80	1	1	37.8	12.2	12.2	-12.3	25652	WARNE2	13.80	1.0000	1.0000
25653	ALAMO SC	13.80	1	1	4.0	-3.4	6.0	-6.0	25653	ALAMO S	13.80	1.0000	1.0000
24133	SANTIAGO	66.00	1	0	0.0	-3.4	8.5	-4.3	24133	SANTIAG	66.00	1.0450	1.0268
24127	S.CLARA	66.00	1	0	0.0	-3.4	24.5	-12.3	24127	S.CLARA	66.00	1.0080	0.9998
28190	WINTECX2	13.80	1	1	45.0	-0.1	28.0	-28.0	28190	WINTECX	13.80	1.0000	1.0000
28191	WINTECX1	13.80	1	1	45.0	-0.1	28.0	-28.0	28191	WINTECX	13.80	1.0000	1.0000
28180	WINTEC8	13.80	1	1	45.0	-0.1	28.0	-28.0	28180	WINTEC8	13.80	1.0000	1.0000
24062	HARBOR13	13.80	1	1	89.5	-8.1	40.0	-20.0	24062	HARBOR1	13.80	1.0000	1.0000
25510	HARBORG4	4.16	LP	1	9.9	-2.0	7.0	-2.0	24062	HARBOR1	13.80	1.0000	1.0000
24062	HARBOR13	13.80	HP	1	9.9	-0.9	7.0	-2.0	24062	HARBOR1	13.80	1.0000	1.0000
24815	GARNET	115.00	EQ	0	101.4	-50.7	-50.7	-50.7	24815	GARNET	115.00	1.0000	1.0049
28020	WINTEC6	115.00	1	1	44.7	-15.0	-15.0	-15.0	28020	WINTEC6	115.00	1.0000	1.0051
28060	SEAWEST	115.00	1	0	44.4	-14.8	-14.8	-14.8	28060	SEAWEST	115.00	1.0000	1.0037
28060	SEAWEST	115.00	2	0	45.0	-15.0	-15.0	-15.0	28060	SEAWEST	115.00	1.0000	1.0037
28061	WDT092	33.00	1	0	66.0	-22.0	-22.0	-22.0	28061	WDT092	33.00	1.0000	1.0507
28260	ALTAMSA4	115.00	1	0	40.0	-13.3	-13.3	-13.3	28260	ALTAMSA	115.00	1.0000	1.0041
28280	WDT053	33.00	1	0	42.9	-14.3	-14.3	-14.3	28280	WDT053	33.00	1.0000	1.0062
28000	TOT005ST	20.00	1	0	210.0	32.6	160.0	-90.0	24350	TOT005	230.00	1.0000	1.0051

2009 Heavy Summer - Vernon Power Plant 914 MW
CASE NAME: Vpp09hsPost914.sav

BUS-NO	NAME1	KV1	ID	ST	PGEN	QGEN	QMX	QMN	IREG	NAME2	KV2	VSCHED	V-ACT
28001	TOT005CT	15.00	1	0	180.0	32.6	80.0	-60.0	24350	TOT005	230.00	1.0000	1.0051
28002	TOT005CT	15.00	1	0	180.0	32.6	80.0	-60.0	24350	TOT005	230.00	1.0000	1.0051
28003	TOT005CT	15.00	1	0	180.0	32.6	80.0	-60.0	24350	TOT005	230.00	1.0000	1.0051
24718	ALTA31GT	13.80	31	1	59.6	1.6	41.0	-30.0	24718	ALTA31G	13.80	1.0000	1.0000
24719	ALTA 3ST	13.80	3	1	107.3	-3.4	58.0	-41.0	24719	ALTA 3S	13.80	1.0000	1.0000
24720	ALTA41GT	13.80	41	1	65.6	2.4	41.0	-30.0	24720	ALTA41G	13.80	1.0000	1.0000
24721	ALTA 4ST	13.80	4	0	0.0	-7.9	58.0	-41.0	24721	ALTA 4S	13.80	1.0000	1.0046
24734	ALTA32GT	13.80	32	0	0.0	1.2	41.0	-30.0	24734	ALTA32G	13.80	1.0000	1.0046
24735	ALTA42GT	13.80	42	0	0.0	1.2	41.0	-30.0	24735	ALTA42G	13.80	1.0000	1.0046
24921	TOT109-C	18.00	1	0	162.0	35.2	115.0	-61.0	24921	TOT109-	18.00	1.0300	1.0142
24922	TOT109-C	18.00	1	1	185.9	34.8	115.0	-61.0	24922	TOT109-	18.00	1.0300	1.0300
24923	TOT109-S	18.00	1	1	185.9	37.2	200.0	-100.0	24923	TOT109-	18.00	1.0300	1.0300
24924	TOT109-C	18.00	1	1	185.9	34.8	115.0	-61.0	24924	TOT109-	18.00	1.0300	1.0300
24925	TOT109-C	18.00	1	0	162.0	30.6	115.0	-61.0	24925	TOT109-	18.00	1.0300	1.0142
24926	TOT109-S	18.00	1	1	185.9	37.5	200.0	-100.0	24926	TOT109-	18.00	1.0300	1.0300
24999	DEVRSVC1	500.00	1	0	0.0	0.1	0.1	0.0	24999	DEVRSVC	500.00	1.0222	1.0893
24927	AES1	13.80	1	1	107.5	-9.0	25.0	-15.0	24927	AES1	13.80	1.0000	1.0000
24928	AES2	13.80	2	1	107.5	-9.0	25.0	-15.0	24928	AES2	13.80	1.0000	1.0000
24929	AES3	13.80	3	1	107.5	-9.0	25.0	-15.0	24929	AES3	13.80	1.0000	1.0000
24999	DEVRSVC1	500.00	2	0	0.0	0.1	0.1	0.0	24999	DEVRSVC	500.00	1.0222	1.0893
25711	TOT1201	0.57	1	0	25.5	2.4	8.4	-12.4	25711	TOT1201	0.57	1.0000	1.0066
25712	TOT1202	0.57	1	0	24.0	2.1	7.9	-11.6	25712	TOT1202	0.57	1.0000	1.0066
25713	TOT1203	0.57	1	0	25.5	1.8	8.4	-12.4	25713	TOT1203	0.57	1.0000	1.0066
25714	TOT1204	0.57	1	0	25.5	1.6	8.4	-12.4	25714	TOT1204	0.57	1.0000	1.0066
24234	RECTRSVC	230.00	1	1	0.0	0.1	0.1	0.0	24234	RECTRSV	230.00	1.0000	0.9512
28041	TOT139C1	19.50	1	0	101.2	23.4	280.0	-200.0	28041	TOT139C	19.50	1.0460	1.0382
28042	TOT139C2	19.50	2	0	405.0	54.9	280.0	-200.0	28042	TOT139C	19.50	1.0460	1.0382
24998	RERC	66.00	1	1	47.7	-0.8	15.0	-0.8	24998	RERC	66.00	0.9804	1.0202
24998	RERC	66.00	2	1	47.7	-0.8	15.0	-0.8	24998	RERC	66.00	0.9804	1.0202
28169	WDT179	13.80	1	0	49.9	6.2	16.4	-24.2	28169	WDT179	13.80	1.0000	1.0145
24075	LAGUBELL	66.00	wc	1	49.6	-24.2	16.4	-24.2	24075	LAGUBEL	66.00	1.0150	1.0266
24902	VSTA	66.00	3	0	49.0	15.0	15.0	-12.5	24902	VSTA	66.00	1.0230	1.0145
28201	TOT135G1	13.80	1	1	99.5	29.5	81.7	-48.0	28201	TOT135G	13.80	1.0000	1.0000
28888	WDT188	13.80	1	0	49.9	-14.9	16.4	-24.2	28888	WDT188	13.80	1.0000	1.0343
28057	TOT139G1	15.00	1	0	184.0	145.5	138.0	-92.0	28056	TOT139D	230.00	0.9675	1.0090
28058	TOT139G2	15.00	2	0	184.0	-92.0	138.0	-92.0	28056	TOT139D	230.00	0.9675	1.0090
28059	TOT139G3	15.00	3	0	184.0	-92.0	138.0	-92.0	28056	TOT139D	230.00	0.9675	1.0090
28203	TOT135G3	13.80	1	1	99.5	29.5	81.7	-48.0	28203	TOT135G	13.80	1.0000	1.0000
28204	TOT135G4	13.80	1	1	99.5	29.5	81.7	-48.0	28204	TOT135G	13.80	1.0000	1.0000
28205	TOT135G5	13.80	1	1	99.5	29.5	81.7	-48.0	28205	TOT135G	13.80	1.0000	1.0000
28202	TOT135G2	13.80	1	1	99.5	29.5	81.7	-48.0	28202	TOT135G	13.80	1.0000	1.0000
28213	WDT182G1	13.80	1	1	100.9	-28.3	80.0	-50.0	28213	WDT182G	13.80	1.0000	1.0000
28214	WDT182G2	13.80	1	1	100.9	-28.3	80.0	-50.0	28214	WDT182G	13.80	1.0000	1.0000
28215	WDT182G3	13.80	1	1	100.9	-28.3	80.0	-50.0	28215	WDT182G	13.80	1.0000	1.0000
28216	WDT182G4	13.80	1	1	100.9	-28.3	80.0	-50.0	28216	WDT182G	13.80	1.0000	1.0000
28217	WDT182G5	13.80	1	1	100.9	-28.3	80.0	-50.0	28217	WDT182G	13.80	1.0000	1.0000
28104	TOT032S1	22.00	S1	1	348.0	95.3	195.0	-120.0	28104	TOT032S	22.00	1.0200	1.0200
28103	TOT032G3	18.00	G3	1	165.7	48.5	90.0	-70.0	28103	TOT032G	18.00	1.0200	1.0200
28102	TOT032G2	18.00	G2	1	165.7	48.5	90.0	-70.0	28102	TOT032G	18.00	1.0200	1.0200
28101	TOT032G1	18.00	G1	1	165.7	48.5	90.0	-70.0	28101	TOT032G	18.00	1.0200	1.0200
28220	TOT138G2	15.00	2	1	200.8	62.8	103.0	-51.0	28220	TOT138G	15.00	1.0300	1.0300
28219	TOT138G1	15.00	1	1	200.8	62.8	103.0	-51.0	28219	TOT138G	15.00	1.0300	1.0300
25500	P500_G5	18.00	5	1	169.0	25.5	60.0	-60.0	25500	P500_G5	18.00	1.0300	1.0300
25501	P500_G6	18.00	6	1	169.0	25.5	60.0	-60.0	25501	P500_G6	18.00	1.0300	1.0300
25502	P500_S7	18.00	7	1	278.3	39.6	160.0	-80.0	25502	P500_S7	18.00	1.0300	1.0300
24157	WALNUT	66.00	WP	1	49.6	16.4	16.4	-24.2	24157	WALNUT	66.00	1.0380	1.0223
99112	ELSNORE2	16.00	1	1	249.7	-85.3	122.0	-122.0	99112	ELSNORE	16.00	1.0000	1.0000
99110	ELSNORE1	16.00	1	1	249.7	-85.3	122.0	-122.0	99110	ELSNORE	16.00	1.0000	1.0000
24856	WDT213G1	0.60	1	0	25.0	-9.3	-9.3	-9.3	24856	WDT213G	0.60	1.0000	1.0061
24857	WDT213G2	0.60	1	0	24.0	-8.0	-8.0	-8.0	24857	WDT213G	0.60	1.0000	1.0061

2009 Heavy Summer - Vernon Power Plant 914 MW
CASE NAME: Vpp09hsPost914.sav

BUS-NO	NAME1	KV1	ID	ST	PGEN	QGEN	QMX	QMN	IREG	NAME2	KV2	VSCHED	V-ACT
28296	TOT166C1	16.50	1	1	228.1	75.4	75.4	-111.2	28296	TOT166C	16.50	1.0364	1.0020
28297	TOT166C2	16.50	2	1	228.1	75.4	75.4	-111.2	28297	TOT166C	16.50	1.0364	1.0020
28298	TOT166S	18.00	1	1	297.9	98.5	98.5	-145.2	28298	TOT166S	18.00	1.0364	1.0020
24401	ANTELOPE	230.00	1	1	1263.3	-424.0	-424.0	-424.0	24401	ANTELOP	230.00	1.0200	0.9704
29700	TEH_GENS	230.00	1	1	2953.0	-58.4	200.0	-200.0	29700	TEH_GEN	230.00	1.0000	1.0000

** gens ** Page 1 [vpp10lsppre914.sav] Thu Sep 07 14:54:11 2006

2010 Light Spring - PRE CASE
CASE NAME: Vpp10lspPre914.sav

BUS-NO	NAME1	KV1	ID	ST	PGEN	QGEN	QMX	QMN	IREG	NAME2	KV2	VSCHED	V-ACT
24656	VERNNST1	19.00	1	0	360.5	8.6	124.2	-79.6	24656	VERNNST	19.00	1.0005	1.0010
24654	VERNNCT3	15.00	1	0	194.5	13.1	95.9	-65.1	24654	VERNNCT	15.00	1.0000	1.0010
24652	VERNNCT2	15.00	1	0	194.5	13.1	95.9	-65.1	24652	VERNNCT	15.00	1.0000	1.0010
24651	VERNNCT1	15.00	1	0	194.5	13.1	95.9	-65.1	24651	VERNNCT	15.00	1.0000	1.0010
24456	BOREL	66.00	1	0	10.0	0.0	5.0	-2.5	24456	BOREL	66.00	1.0000	1.0000
28055	TOT018S2	18.00	S2	0	0.0	10.5	53.0	-38.0	28055	TOT018S	18.00	1.0000	0.9995
28054	TOT018G3	18.00	G3	0	0.0	32.0	105.0	-76.0	28054	TOT018G	18.00	1.0000	0.9995
28053	TOT018S1	18.00	S1	0	0.0	33.0	109.0	-78.0	28053	TOT018S	18.00	1.0000	0.9995
28052	TOT018G2	18.00	G2	0	0.0	32.0	105.0	-76.0	28052	TOT018G	18.00	1.0000	0.9995
28051	TOT018G1	18.00	G1	0	0.0	32.0	105.0	-76.0	28051	TOT018G	18.00	1.0000	0.9995
24001	ALAMT1 G	18.00	1	1	163.1	-50.0	75.0	-50.0	24001	ALAMT1	18.00	1.0000	1.0128
24002	ALAMT2 G	18.00	2	1	163.1	-50.0	75.0	-50.0	24002	ALAMT2	18.00	1.0000	1.0128
24003	ALAMT3 G	18.00	3	1	305.9	25.7	150.0	-100.0	24003	ALAMT3	18.00	1.0000	1.0000
24004	ALAMT4 G	18.00	4	1	305.9	25.7	150.0	-100.0	24004	ALAMT4	18.00	1.0000	1.0000
24005	ALAMT5 G	20.00	5	1	458.9	-42.5	240.0	-120.0	24005	ALAMT5	20.00	1.0000	1.0000
24161	ALAMT6 G	20.00	6	1	458.9	-42.5	210.0	-150.0	24161	ALAMT6	20.00	1.0000	1.0000
24162	ALAMT7 G	16.00	7	0	0.0	50.0	50.0	-25.0	24162	ALAMT7	16.00	1.0250	1.0020
25203	ANAHEIMG	13.80	1	0	0.0	11.7	25.0	-12.0	25203	ANAHEIM	13.80	1.0000	1.0105
24009	APPGEN1G	13.80	1	0	0.0	6.4	42.0	0.0	24009	APPGEN1	13.80	1.0000	1.0181
24010	APPGEN2G	13.80	2	0	0.0	6.4	42.0	0.0	24010	APPGEN2	13.80	1.0000	1.0181
24011	ARCO 1G	13.80	1	1	81.6	-4.2	40.0	-20.0	24011	ARCO 1	13.80	1.0000	1.0000
24012	ARCO 2G	13.80	2	1	81.6	-4.2	40.0	-20.0	24012	ARCO 2	13.80	1.0000	1.0000
24013	ARCO 3G	13.80	3	1	81.6	-4.2	40.0	-20.0	24013	ARCO 3	13.80	1.0000	1.0000
24014	ARCO 4G	13.80	4	1	81.6	-4.2	40.0	-20.0	24014	ARCO 4	13.80	1.0000	1.0000
24163	ARCO 5G	13.80	5	1	40.8	-1.1	25.0	-20.0	24163	ARCO 5	13.80	1.0000	1.0000
24164	ARCO 6G	13.80	6	1	40.8	-1.1	25.0	-20.0	24164	ARCO 6	13.80	1.0000	1.0000
24703	BLM E7G	13.80	7	0	20.0	-3.8	15.0	-7.5	24703	BLM E7	13.80	1.0000	1.0338
24704	BLM E8G	13.80	8	0	20.0	-3.8	15.0	-7.5	24704	BLM E8	13.80	1.0000	1.0338
24705	BLM W9G	13.80	9	0	20.0	-4.6	12.0	-6.0	24705	BLM W9	13.80	1.0000	1.0340
24708	BORAX I	13.80	1	0	27.0	-10.7	22.0	-11.0	24708	BORAX I	13.80	1.0000	1.0095
24018	BRIGEN	13.80	1	1	30.6	-8.0	17.0	-8.0	24018	BRIGEN	13.80	1.0000	1.0308
24709	BSPHYD26	2.20	26	1	10.2	2.5	7.0	0.0	24709	BSPHYD2	2.20	1.0000	1.0000
24710	BSPHYD34	2.20	34	1	10.2	0.3	7.0	-3.0	24710	BSPHYD3	2.20	1.0000	1.0000
24711	CALGEN1G	13.80	1	0	30.0	-2.3	15.0	-7.5	24711	CALGEN1	13.80	1.0000	1.0063
24712	CALGEN2G	13.80	2	0	25.0	-2.6	12.0	-6.0	24712	CALGEN2	13.80	1.0000	1.0063
24713	CALGEN3G	13.80	3	0	25.0	-2.6	12.0	-6.0	24713	CALGEN3	13.80	1.0000	1.0063
24020	WDT041	13.80	1	1	30.6	-0.0	17.0	0.0	24020	WDT041	13.80	1.0000	1.0463
24022	CHEVGEN1	13.80	1	1	30.6	0.0	19.0	0.0	24022	CHEVGEN	13.80	1.0000	1.0636
24023	CHEVGEN2	13.80	2	1	30.6	0.0	19.0	0.0	24023	CHEVGEN	13.80	1.0000	1.0636
24026	CIMGEN	13.80	1	1	30.6	-0.0	13.0	0.0	24026	CIMGEN	13.80	1.0000	1.0390
24027	COLDGEN	13.80	1	1	28.6	-7.0	14.0	-7.0	24027	COLDGEN	13.80	1.0000	1.0008
24714	ALTA 1G	13.80	1	0	60.0	6.0	32.0	-16.0	24714	ALTA 1	13.80	1.0000	0.9812
24715	ALTA 2G	13.80	2	0	60.0	6.4	40.0	-20.0	24715	ALTA 2	13.80	1.0000	0.9812
24726	CSA DIAB	4.16	1	1	15.3	-2.1	15.0	-8.0	24726	CSA DIA	4.16	1.0000	1.0000
24030	DELGEN	13.80	1	1	45.9	0.0	20.0	0.0	24030	DELGEN	13.80	1.0000	1.0388
25648	DVLCYN1G	13.80	1	1	51.0	-15.0	30.0	-15.0	25648	DVLCYN1	13.80	1.0000	1.0426
25649	DVLCYN2G	13.80	2	1	56.1	-15.0	30.0	-15.0	25649	DVLCYN2	13.80	1.0000	1.0426
25603	DVLCYN3G	13.80	3	0	0.0	-15.0	30.0	-15.0	25603	DVLCYN3	13.80	1.0000	1.0462
25604	DVLCYN4G	13.80	4	0	0.0	-15.0	30.0	-15.0	25604	DVLCYN4	13.80	1.0000	1.0462
25605	EDMON1AP	14.40	1	1	-61.2	0.5	1.0	0.0	25605	EDMON1A	14.40	1.0000	0.9982
25606	EDMON2AP	14.40	2	1	-61.2	0.5	1.0	0.0	25606	EDMON2A	14.40	1.0000	0.9982
25607	EDMON3AP	14.40	3	1	-61.2	0.5	1.0	0.0	25607	EDMON3A	14.40	1.0000	0.9936
25607	EDMON3AP	14.40	4	1	-61.2	0.5	1.0	0.0	25607	EDMON3A	14.40	1.0000	0.9936
25608	EDMON4AP	14.40	5	0	-60.0	0.5	1.0	0.0	25608	EDMON4A	14.40	1.0000	0.9991
25608	EDMON4AP	14.40	6	0	-60.0	0.5	1.0	0.0	25608	EDMON4A	14.40	1.0000	0.9991
25609	EDMON5AP	14.40	7	0	0.0	0.5	1.0	0.0	25609	EDMON5A	14.40	1.0000	0.9991
25609	EDMON5AP	14.40	8	0	0.0	0.5	1.0	0.0	25609	EDMON5A	14.40	1.0000	0.9991
25610	EDMON6AP	14.40	9	0	0.0	0.5	1.0	0.0	25610	EDMON6A	14.40	1.0000	0.9991
25610	EDMON6AP	14.40	10	0	0.0	0.5	1.0	0.0	25610	EDMON6A	14.40	1.0000	0.9991
25611	EDMON7AP	14.40	11	0	0.0	0.5	1.0	0.0	25611	EDMON7A	14.40	1.0000	0.9991

2010 Light Spring - PRE CASE
CASE NAME: Vpp10lspPre914.sav

BUS-NO	NAME1	KV1	ID	ST	PGEN	QGEN	QMX	QMN	IREG	NAME2	KV2	VSCHED	V-ACT
25611	EDMON7AP	14.40	12	0	0.0	0.5	1.0	0.0	25611	EDMON7A	14.40	1.0000	0.9991
25612	EDMON8AP	14.40	13	0	0.0	0.5	1.0	0.0	25612	EDMON8A	14.40	1.0000	0.9991
25612	EDMON8AP	14.40	14	0	0.0	0.5	1.0	0.0	25612	EDMON8A	14.40	1.0000	0.9991
24045	ELSEG1 G	18.00	1	0	0.0	-18.1	75.0	-50.0	24045	ELSEG1	18.00	1.0300	1.0679
24046	ELSEG2 G	18.00	2	0	0.0	-20.1	75.0	-50.0	24046	ELSEG2	18.00	1.0300	1.0679
24047	ELSEG3 G	18.00	3	1	336.5	43.6	145.0	-100.0	24047	ELSEG3	18.00	1.0300	1.0300
24048	ELSEG4 G	18.00	4	1	336.5	43.6	145.0	-100.0	24048	ELSEG4	18.00	1.0300	1.0300
24050	MTNVIST1	15.50	1	0	0.0	22.2	55.0	-40.0	24050	MTNVIST	15.50	1.0300	1.0802
24051	MTNVIST2	15.50	2	0	0.0	22.2	55.0	-40.0	24051	MTNVIST	15.50	1.0300	1.0802
24052	MTNVIST3	18.00	3	0	100.0	140.0	140.0	-100.0	24052	MTNVIST	18.00	1.0300	1.0332
24053	MTNVIST4	18.00	4	1	102.0	-5.9	140.0	-100.0	24053	MTNVIST	18.00	1.0300	1.0300
24054	MTNVIST5	16.00	5	0	0.0	45.9	50.0	-25.0	24054	MTNVIST	16.00	1.0300	1.0360
24060	GROWGEN	13.80	1	1	28.6	0.0	14.0	0.0	24060	GROWGEN	13.80	1.0000	1.0055
24905	RVCANAL1	13.80	1	0	0.0	1.2	17.0	-10.0	24905	RVCANAL	13.80	1.0000	1.0447
24906	RVCANAL2	13.80	2	0	0.0	1.2	17.0	-10.0	24906	RVCANAL	13.80	1.0000	1.0447
24907	RVCANAL3	13.80	3	0	0.0	2.2	25.0	-15.0	24907	RVCANAL	13.80	1.0000	1.0447
24908	RVCANAL4	13.80	4	0	0.0	2.2	25.0	-15.0	24908	RVCANAL	13.80	1.0000	1.0447
24063	HILLGEN	13.80	1	1	25.5	-0.0	25.0	0.0	24063	HILLGEN	13.80	1.0000	1.0312
24064	HINSON	66.00	1	0	0.0	0.0	23.5	-12.0	24064	HINSON	66.00	1.0150	1.0464
24066	HUNT1 G	13.80	1	1	203.9	29.7	130.0	-65.0	24066	HUNT1	13.80	1.0200	1.0200
24067	HUNT2 G	13.80	2	1	203.9	29.7	130.0	-65.0	24067	HUNT2	13.80	1.0200	1.0200
24167	HUNT3 G	13.80	3	1	203.9	-0.3	140.0	-70.0	24167	HUNT3	13.80	1.0000	1.0000
24168	HUNT4 G	13.80	4	1	203.9	-0.4	140.0	-70.0	24168	HUNT4	13.80	1.0000	1.0000
24169	HUNT5 G	16.00	5	0	0.0	-5.6	130.0	-25.0	24169	HUNT5	16.00	1.0000	1.0176
24070	ICEGEN	13.80	1	1	25.5	-0.0	22.0	0.0	24070	ICEGEN	13.80	1.0000	1.0357
24071	INLAND	13.80	1	1	30.6	-0.0	15.0	0.0	24071	INLAND	13.80	1.0000	1.0594
24078	LBEACH1G	13.80	1	0	0.0	2.7	30.0	-15.0	24078	LBEACH1	13.80	1.0000	1.0232
24170	LBEACH2G	13.80	2	0	40.0	-0.3	30.0	-15.0	24170	LBEACH2	13.80	1.0000	1.0464
24171	LBEACH3G	13.80	3	0	0.0	1.8	30.0	-15.0	24171	LBEACH3	13.80	1.0000	1.0232
24172	LBEACH4G	13.80	4	0	0.0	8.3	30.0	-15.0	24172	LBEACH4	13.80	1.0000	1.0232
24173	LBEACH5G	13.80	5	0	0.0	0.1	30.0	-15.0	24173	LBEACH5	13.80	1.0000	1.0407
24174	LBEACH6G	13.80	6	0	0.0	0.1	30.0	-15.0	24174	LBEACH6	13.80	1.0000	1.0407
24079	LBEACH7G	13.80	7	0	0.0	-0.2	30.0	-15.0	24079	LBEACH7	13.80	1.0000	1.0407
24080	LBEACH8G	13.80	8	0	0.0	11.0	48.0	-34.0	24080	LBEACH8	13.80	1.0000	1.0232
24081	LBEACH9G	13.80	9	0	0.0	8.3	30.0	-15.0	24081	LBEACH9	13.80	1.0000	1.0232
24737	LUZ8 G	13.80	8	1	61.2	-20.0	40.0	-20.0	24737	LUZ8 G	13.80	1.0000	1.0521
24738	LUZ9 G	13.80	9	1	61.2	-20.0	40.0	-20.0	24738	LUZ9 G	13.80	1.0000	1.0521
24089	MANDLY1G	13.80	1	0	100.0	6.7	130.0	-67.5	24089	MANDLY1	13.80	1.0000	0.9918
24090	MANDLY2G	13.80	2	0	0.0	5.3	130.0	-67.5	24090	MANDLY2	13.80	1.0000	0.9918
24222	MANDLY3G	16.00	3	0	0.0	3.8	130.0	-67.5	24222	MANDLY3	16.00	1.0000	0.9941
24740	MC GEN	13.80	1	0	55.0	-11.2	75.0	-35.0	24740	MC GEN	13.80	1.0300	1.0307
24094	MOBGEN	13.80	1	1	40.8	0.0	20.0	0.0	24094	MOBGEN	13.80	1.0000	1.0459
24742	MOGEN G	13.80	1	1	58.1	-8.1	27.0	-13.0	24742	MOGEN	13.80	1.0000	1.0000
24095	MOHAV1CC	22.00	1	0	0.0	25.3	350.0	-150.0	24095	MOHAV1C	22.00	1.0000	1.0536
24096	MOHAV2CC	22.00	2	0	0.0	54.6	350.0	-150.0	24096	MOHAV2C	22.00	1.0000	1.0536
24744	NAVYII4G	13.80	4	1	25.5	-3.0	12.0	-6.0	24744	NAVYII4	13.80	1.0000	1.0000
24745	NAVYII5G	13.80	5	1	25.5	-3.0	12.0	-6.0	24745	NAVYII5	13.80	1.0000	1.0000
24746	NAVYII6G	13.80	6	1	25.5	-3.0	12.0	-6.0	24746	NAVYII6	13.80	1.0000	1.0000
24211	OLINDA	66.00	1	0	0.0	0.0	3.0	-1.8	24211	OLINDA	66.00	1.0450	1.0451
24102	OMAR 1G	13.80	1	1	76.5	-0.0	14.3	0.0	24102	OMAR 1	13.80	1.0000	1.0416
24103	OMAR 2G	13.80	2	1	76.5	-0.0	14.3	0.0	24103	OMAR 2	13.80	1.0000	1.0416
24104	OMAR 3G	13.80	3	0	75.0	-0.0	14.3	0.0	24104	OMAR 3	13.80	1.0000	1.0480
24105	OMAR 4G	13.80	4	0	75.0	-20.0	14.3	-20.0	24105	OMAR 4	13.80	1.0000	1.0480
24107	ORMOND1G	26.00	1	0	100.0	33.2	400.0	-240.0	24107	ORMOND1	26.00	1.0000	0.9757
24108	ORMOND2G	26.00	2	0	200.0	35.5	400.0	-240.0	24108	ORMOND2	26.00	1.0000	0.9757
24747	OXBOW G1	13.80	1	1	54.0	0.0	27.0	0.0	24747	OXBOW G	13.80	1.0000	1.0048
24110	OXGEN	13.80	1	1	34.7	0.0	17.0	0.0	24110	OXGEN	13.80	1.0000	1.0108
24113	PANDOL	13.80	1	1	56.1	-2.6	25.0	-12.0	24113	PANDOL	13.80	1.0000	1.0000
24422	PALMDALE	66.00	1	0	0.0	-12.0	0.5	-0.3	24422	PALMDAL	66.00	1.0100	1.0151
25617	PEARBMAP	13.20	1	0	0.0	1.0	1.0	0.0	25617	PEARBMA	13.20	1.0000	1.0030

2010 Light Spring - PRE CASE
CASE NAME: Vpp10lspPre914.sav

BUS-NO	NAME1	KV1	ID	ST	PGEN	QGEN	QMX	QMN	IREG	NAME2	KV2	VSCHED	V-ACT
25617	PEARBMAP	13.20	2	0	0.0	1.0	1.0	0.0	25617	PEARBMA	13.20	1.0000	1.0030
25617	PEARBMAP	13.20	3	0	0.0	1.0	1.0	0.0	25617	PEARBMA	13.20	1.0000	1.0030
25618	PEARBMBP	13.20	4	0	0.0	1.0	1.0	0.0	25618	PEARBMB	13.20	1.0000	1.0030
25618	PEARBMBP	13.20	5	0	0.0	1.0	1.0	0.0	25618	PEARBMB	13.20	1.0000	1.0030
25618	PEARBMBP	13.20	6	0	0.0	1.0	1.0	0.0	25618	PEARBMB	13.20	1.0000	1.0030
25619	PEARBMCP	13.80	7	1	-22.4	0.5	1.0	0.0	25619	PEARBMC	13.80	1.0000	1.0031
25619	PEARBMCP	13.80	8	0	0.0	0.5	1.0	0.0	25619	PEARBMC	13.80	1.0000	1.0031
25620	PEARBMDP	13.80	9	0	0.0	0.5	1.0	0.0	25620	PEARBMD	13.80	1.0000	1.0030
24118	PITCHGEN	13.80	1	1	30.6	-0.0	15.0	0.0	24118	PITCHGE	13.80	1.0000	1.0179
24119	PROCGEN	13.80	1	1	52.0	0.0	26.0	0.0	24119	PROCGEN	13.80	1.0000	1.0104
24120	PULPGEN	13.80	1	1	35.7	0.0	20.0	0.0	24120	PULPGEN	13.80	1.0000	1.0054
24121	REDON5 G	18.00	5	1	168.2	-50.0	75.0	-50.0	24121	REDON5	18.00	1.0300	1.0359
24122	REDON6 G	18.00	6	1	147.9	-50.0	75.0	-50.0	24122	REDON6	18.00	1.0300	1.0394
24123	REDON7 G	20.00	7	1	489.4	180.1	210.0	-150.0	24123	REDON7	20.00	1.0300	1.0300
24124	REDON8 G	20.00	8	1	489.4	181.2	210.0	-150.0	24124	REDON8	20.00	1.0300	1.0300
24914	MTNVIEW1	13.80	1	0	0.0	-1.8	30.0	-15.0	24914	MTNVIEW	13.80	1.0000	1.0449
24915	MTNVIEW2	13.80	2	0	0.0	-1.2	30.0	-15.0	24915	MTNVIEW	13.80	1.0000	1.0449
24129	S.ONOFR2	22.00	2	1	1080.9	200.6	550.0	-410.0	24129	S.ONOFR	22.00	1.0200	1.0200
24130	S.ONOFR3	22.00	3	1	1101.3	201.9	550.0	-410.0	24130	S.ONOFR	22.00	1.0200	1.0200
24136	SEAWEST	230.00	1	0	0.0	12.7	15.0	0.0	24136	SEAWEST	230.00	1.0000	1.0039
24751	SEGS 1G	13.80	1	1	20.4	-4.9	10.0	-5.0	24751	SEGS 1	13.80	1.0000	1.0000
24752	SEGS 2G	13.80	2	1	30.6	-4.3	10.0	-5.0	24752	SEGS 2	13.80	1.0000	1.0000
24139	SERRFGEN	13.80	1	1	33.6	0.0	20.0	0.0	24139	SERRFGE	13.80	1.0000	1.0462
24140	SIMPSON	13.80	1	1	37.7	-0.0	20.0	0.0	24140	SIMPSON	13.80	1.0000	1.0389
24754	SUNGEN3G	13.80	3	1	34.7	-1.4	17.0	-8.0	24754	SUNGEN3	13.80	1.0000	1.0000
24755	SUNGEN4G	13.80	4	1	34.7	-1.4	17.0	-8.0	24755	SUNGEN4	13.80	1.0000	1.0000
24756	SUNGEN5G	13.80	5	1	34.7	-1.4	17.0	-8.0	24756	SUNGEN5	13.80	1.0000	1.0000
24757	SUNGEN6G	13.80	6	1	35.7	-1.3	17.0	-8.0	24757	SUNGEN6	13.80	1.0000	1.0000
24758	SUNGEN7G	13.80	7	1	35.7	-1.3	17.0	-8.0	24758	SUNGEN7	13.80	1.0000	1.0000
24143	SYCCYN1G	13.80	1	1	71.4	0.0	14.3	0.0	24143	SYCCYN1	13.80	1.0000	1.0420
24144	SYCCYN2G	13.80	2	1	71.4	0.0	14.3	0.0	24144	SYCCYN2	13.80	1.0000	1.0420
24145	SYCCYN3G	13.80	3	1	71.4	0.0	14.3	0.0	24145	SYCCYN3	13.80	1.0000	1.0420
24146	SYCCYN4G	13.80	4	1	71.4	0.0	14.3	0.0	24146	SYCCYN4	13.80	1.0000	1.0420
24148	TENNGEN1	13.80	1	1	22.4	-0.0	15.0	0.0	24148	TENNGEN	13.80	1.0000	1.0180
24149	TENNGEN2	13.80	2	1	22.4	-0.0	15.0	0.0	24149	TENNGEN	13.80	1.0000	1.0180
24150	ULTRAGEN	13.80	1	1	41.8	0.0	9.8	0.0	24150	ULTRAGE	13.80	1.0000	1.0021
24159	WILLAMET	13.80	1	1	25.5	0.0	15.0	0.0	24159	WILLAME	13.80	1.0000	1.0109
24160	VALLEYSC	115.00	1	0	0.0	0.1	0.1	0.0	24160	VALLEYS	115.00	0.9830	1.0686
24152	VESTAL	66.00	1	0	0.0	0.0	25.0	-12.5	24152	VESTAL	66.00	1.0300	1.0025
24902	VSTA	66.00	1	0	0.0	0.0	1.5	-0.8	24902	VSTA	66.00	1.0230	1.0275
24319	EASTWOOD	13.80	1	1	91.8	-23.2	97.0	-50.0	24319	EASTWOO	13.80	1.0000	1.0000
24306	B CRK1-1	7.90	1	1	10.2	7.2	7.2	-3.1	24306	B CRK1-	7.90	1.0000	0.9691
24306	B CRK1-1	7.90	2	1	10.2	6.1	6.1	-2.8	24306	B CRK1-	7.90	1.0000	0.9691
24307	B CRK1-2	13.20	3	1	15.3	-2.2	6.8	-2.2	24307	B CRK1-	13.20	1.0000	1.0174
24307	B CRK1-2	13.20	4	1	20.4	-2.0	5.0	-2.0	24307	B CRK1-	13.20	1.0000	1.0174
24308	B CRK2-1	13.80	1	1	30.6	5.5	26.4	-35.0	24308	B CRK2-	13.80	1.0000	1.0000
24308	B CRK2-1	13.80	2	1	30.6	5.5	28.5	-35.0	24308	B CRK2-	13.80	1.0000	1.0000
24309	B CRK2-2	7.60	3	1	10.2	4.3	6.0	-4.0	24309	B CRK2-	7.60	1.0000	1.0000
24309	B CRK2-2	7.60	4	1	10.2	4.3	6.0	-4.0	24309	B CRK2-	7.60	1.0000	1.0000
24310	B CRK2-3	6.60	5	1	10.2	-2.7	4.4	-2.7	24310	B CRK2-	6.60	1.0000	1.0167
24310	B CRK2-3	6.60	6	1	10.2	-2.7	5.0	-2.7	24310	B CRK2-	6.60	1.0000	1.0167
24311	B CRK3-1	13.80	1	1	25.5	10.0	10.0	-8.3	24311	B CRK3-	13.80	1.0000	0.9786
24311	B CRK3-1	13.80	2	1	25.5	10.0	10.0	-7.0	24311	B CRK3-	13.80	1.0000	0.9786
24312	B CRK3-2	13.80	3	1	25.5	6.1	10.0	-7.0	24312	B CRK3-	13.80	1.0000	1.0000
24312	B CRK3-2	13.80	4	1	25.5	6.1	13.5	-7.5	24312	B CRK3-	13.80	1.0000	1.0000
24313	B CRK3-3	13.80	5	1	25.5	5.4	17.5	-10.0	24313	B CRK3-	13.80	1.0000	1.0000
24314	B CRK 4	12.00	41	0	30.0	10.2	10.2	-10.0	24314	B CRK 4	12.00	1.0000	0.9514
24314	B CRK 4	12.00	42	0	25.0	9.0	13.6	-10.4	24314	B CRK 4	12.00	1.0000	0.9514
24315	B CRK 8	13.80	81	0	20.0	-2.5	5.5	-2.5	24315	B CRK 8	13.80	1.0000	0.9935
24315	B CRK 8	13.80	82	0	25.0	-2.5	5.5	-2.5	24315	B CRK 8	13.80	1.0000	0.9935

2010 Light Spring - PRE CASE
CASE NAME: Vpp10lspPre914.sav

BUS-NO	NAME1	KV1	ID	ST	PGEN	QGEN	QMX	QMN	IREG	NAME2	KV2	VSCHED	V-ACT
24317	MAMOTH1G	13.80	1	0	80.0	-7.6	26.4	-35.0	24317	MAMOTH1	13.80	1.0000	0.9918
24318	MAMOTH2G	13.80	2	0	80.0	-7.4	28.5	-35.0	24318	MAMOTH2	13.80	1.0000	0.9918
25411	EAGLEMP1	6.90	1	1	-9.5	0.3	0.5	0.0	25411	EAGLEMP	6.90	1.0000	1.0410
25411	EAGLEMP1	6.90	2	1	-9.5	0.3	0.5	0.0	25411	EAGLEMP	6.90	1.0000	1.0410
25411	EAGLEMP1	6.90	3	1	-9.5	0.3	0.5	0.0	25411	EAGLEMP	6.90	1.0000	1.0410
25411	EAGLEMP1	6.90	4	1	-9.5	0.3	0.5	0.0	25411	EAGLEMP	6.90	1.0000	1.0410
25412	EAGLEMP2	6.90	5	0	0.0	0.5	0.5	0.0	25412	EAGLEMP	6.90	1.0000	1.0410
25412	EAGLEMP2	6.90	6	1	-9.5	0.3	0.5	0.0	25412	EAGLEMP	6.90	1.0000	1.0410
25412	EAGLEMP2	6.90	7	1	-9.5	0.3	0.5	0.0	25412	EAGLEMP	6.90	1.0000	1.0410
25412	EAGLEMP2	6.90	8	1	-9.5	0.3	0.5	0.0	25412	EAGLEMP	6.90	1.0000	1.0410
25412	EAGLEMP2	6.90	9	1	-9.5	0.3	0.5	0.0	25412	EAGLEMP	6.90	1.0000	1.0410
25413	GENE P1	6.90	1	1	-6.8	0.1	0.2	0.0	25413	GENE P	6.90	1.0000	1.0415
25413	GENE P1	6.90	2	1	-6.8	0.1	0.2	0.0	25413	GENE P	6.90	1.0000	1.0415
25413	GENE P1	6.90	3	1	-6.8	0.1	0.2	0.0	25413	GENE P	6.90	1.0000	1.0415
25413	GENE P1	6.90	4	1	-6.8	0.1	0.2	0.0	25413	GENE P	6.90	1.0000	1.0415
25414	GENE P2	6.90	5	0	0.0	0.1	0.2	0.0	25414	GENE P	6.90	1.0000	1.0334
25414	GENE P2	6.90	6	1	-6.8	0.1	0.2	0.0	25414	GENE P	6.90	1.0000	1.0334
25414	GENE P2	6.90	7	1	-6.8	0.1	0.2	0.0	25414	GENE P	6.90	1.0000	1.0334
25414	GENE P2	6.90	8	1	-6.8	0.1	0.2	0.0	25414	GENE P	6.90	1.0000	1.0334
25414	GENE P2	6.90	9	1	-6.8	0.1	0.2	0.0	25414	GENE P	6.90	1.0000	1.0334
25415	INTAKEP1	6.90	1	1	-6.8	0.1	0.2	0.0	25415	INTAKEP	6.90	1.0000	1.0277
25415	INTAKEP1	6.90	2	1	-6.8	0.1	0.2	0.0	25415	INTAKEP	6.90	1.0000	1.0277
25415	INTAKEP1	6.90	3	1	-6.8	0.1	0.2	0.0	25415	INTAKEP	6.90	1.0000	1.0277
25415	INTAKEP1	6.90	4	1	-6.8	0.1	0.2	0.0	25415	INTAKEP	6.90	1.0000	1.0277
25416	INTAKEP2	6.90	5	0	0.0	0.1	0.2	0.0	25416	INTAKEP	6.90	1.0000	1.0225
25416	INTAKEP2	6.90	6	1	-6.8	0.1	0.2	0.0	25416	INTAKEP	6.90	1.0000	1.0225
25416	INTAKEP2	6.90	7	1	-6.8	0.1	0.2	0.0	25416	INTAKEP	6.90	1.0000	1.0225
25416	INTAKEP2	6.90	8	1	-6.8	0.1	0.2	0.0	25416	INTAKEP	6.90	1.0000	1.0225
25416	INTAKEP2	6.90	9	1	-6.8	0.1	0.2	0.0	25416	INTAKEP	6.90	1.0000	1.0225
25417	IRONMTP1	6.90	1	1	-3.3	0.1	0.2	0.0	25417	IRONMTP	6.90	1.0000	1.0515
25417	IRONMTP1	6.90	2	1	-3.3	0.1	0.2	0.0	25417	IRONMTP	6.90	1.0000	1.0515
25417	IRONMTP1	6.90	3	1	-3.3	0.1	0.2	0.0	25417	IRONMTP	6.90	1.0000	1.0515
25417	IRONMTP1	6.90	4	1	-3.3	0.1	0.2	0.0	25417	IRONMTP	6.90	1.0000	1.0515
25418	IRONMTP2	6.90	5	0	0.0	0.1	0.2	0.0	25418	IRONMTP	6.90	1.0000	1.0515
25418	IRONMTP2	6.90	6	1	-3.3	0.1	0.2	0.0	25418	IRONMTP	6.90	1.0000	1.0515
25418	IRONMTP2	6.90	7	1	-3.3	0.1	0.2	0.0	25418	IRONMTP	6.90	1.0000	1.0515
25418	IRONMTP2	6.90	8	1	-3.3	0.1	0.2	0.0	25418	IRONMTP	6.90	1.0000	1.0515
25418	IRONMTP2	6.90	9	1	-3.3	0.1	0.2	0.0	25418	IRONMTP	6.90	1.0000	1.0515
25419	JHINDSP1	6.90	1	1	-9.5	0.3	0.5	0.0	25419	JHINDSP	6.90	1.0000	1.0485
25419	JHINDSP1	6.90	2	1	-9.5	0.3	0.5	0.0	25419	JHINDSP	6.90	1.0000	1.0485
25419	JHINDSP1	6.90	3	1	-9.5	0.3	0.5	0.0	25419	JHINDSP	6.90	1.0000	1.0485
25419	JHINDSP1	6.90	4	1	-9.5	0.3	0.5	0.0	25419	JHINDSP	6.90	1.0000	1.0485
25420	JHINDSP2	6.90	5	0	0.0	0.5	0.5	0.0	25420	JHINDSP	6.90	1.0000	1.0485
25422	ETI MWDG	13.80	1	1	6.8	-12.5	15.1	-14.6	25422	ETI MWD	13.80	1.0000	1.0000
25420	JHINDSP2	6.90	6	1	-9.5	0.3	0.5	0.0	25420	JHINDSP	6.90	1.0000	1.0485
25420	JHINDSP2	6.90	7	1	-9.5	0.3	0.5	0.0	25420	JHINDSP	6.90	1.0000	1.0485
25420	JHINDSP2	6.90	8	1	-9.5	0.3	0.5	0.0	25420	JHINDSP	6.90	1.0000	1.0485
25420	JHINDSP2	6.90	9	1	-9.5	0.3	0.5	0.0	25420	JHINDSP	6.90	1.0000	1.0485
25424	ESRP P1	6.90	1	1	-4.6	0.1	0.2	0.0	25424	ESRP P1	6.90	1.0000	1.0655
25424	ESRP P1	6.90	2	1	-4.6	0.1	0.2	0.0	25424	ESRP P1	6.90	1.0000	1.0655
25424	ESRP P1	6.90	3	1	-4.6	0.1	0.2	0.0	25424	ESRP P1	6.90	1.0000	1.0655
25424	ESRP P1	6.90	4	1	-4.6	0.1	0.2	0.0	25424	ESRP P1	6.90	1.0000	1.0655
25425	ESRP P2	6.90	5	0	0.0	0.1	0.2	0.0	25425	ESRP P2	6.90	1.0000	1.0666
25425	ESRP P2	6.90	6	0	0.0	0.1	0.2	0.0	25425	ESRP P2	6.90	1.0000	1.0666
25425	ESRP P2	6.90	7	0	0.0	0.1	0.2	0.0	25425	ESRP P2	6.90	1.0000	1.0666
25425	ESRP P2	6.90	8	0	0.0	0.1	0.2	0.0	25425	ESRP P2	6.90	1.0000	1.0666
25426	ESRP P3	6.90	9	0	0.0	0.1	0.2	0.0	25426	ESRP P3	6.90	1.0000	1.0666
25426	ESRP P3	6.90	10	0	0.0	0.1	0.2	0.0	25426	ESRP P3	6.90	1.0000	1.0666
25426	ESRP P3	6.90	11	0	0.0	0.1	0.2	0.0	25426	ESRP P3	6.90	1.0000	1.0666
25426	ESRP P3	6.90	12	0	0.0	0.1	0.2	0.0	25426	ESRP P3	6.90	1.0000	1.0666

2010 Light Spring - PRE CASE
CASE NAME: Vpp10lspPre914.sav

BUS-NO	NAME1	KV1	ID	ST	PGEN	QGEN	QMX	QMN	IREG	NAME2	KV2	VSCHED	V-ACT
25614	OSO A P	13.20	1	1	-12.2	0.5	1.0	0.0	25614	OSO A	13.20	1.0000	1.0226
25614	OSO A P	13.20	2	0	0.0	0.5	1.0	0.0	25614	OSO A	13.20	1.0000	1.0226
25614	OSO A P	13.20	3	0	0.0	0.0	1.0	0.0	25614	OSO A	13.20	1.0000	1.0226
25614	OSO A P	13.20	4	0	0.0	-1.3	1.0	0.0	25614	OSO A	13.20	1.0000	1.0226
25615	OSO B P	13.20	5	0	0.0	0.5	1.0	0.0	25615	OSO B	13.20	1.0000	1.0218
25615	OSO B P	13.20	6	0	0.0	0.5	1.0	0.0	25615	OSO B	13.20	1.0000	1.0218
25615	OSO B P	13.20	7	0	0.0	0.5	1.0	0.0	25615	OSO B	13.20	1.0000	1.0218
25615	OSO B P	13.20	8	0	0.0	0.5	1.0	0.0	25615	OSO B	13.20	1.0000	1.0218
24457	ARBWIND	66.00	1	0	0.0	-8.9	-8.9	-8.9	24457	ARBWIND	66.00	1.0100	1.0731
24458	ENCANWND	66.00	1	0	0.0	-17.6	-17.6	-17.6	24458	ENCANWN	66.00	1.0100	1.0753
24459	FLOWIND	66.00	1	0	0.0	-14.2	-14.2	-14.2	24459	FLOWIND	66.00	1.0100	1.0736
24460	DUTCHWND	66.00	1	0	0.0	-6.5	-6.5	-6.5	24460	DUTCHWN	66.00	1.0100	1.0718
24461	S.OAKWND	66.00	1	0	0.0	-10.1	-10.1	-10.1	24461	S.OAKWN	66.00	1.0100	1.0698
24462	NORTHWND	66.00	1	0	0.0	-7.5	-7.5	-7.5	24462	NORTHWN	66.00	1.0100	1.0700
24463	ZONDWIND	66.00	1	0	0.0	-11.0	-11.0	-11.0	24463	ZONDWIN	66.00	1.0100	1.0700
24408	BREEZE	66.00	1	0	0.0	-4.6	-4.6	-4.6	24408	BREEZE	66.00	1.0100	1.0700
24436	GOLDTOWN	66.00	1	0	0.0	-3.8	-3.8	-3.8	24436	GOLDTOW	66.00	1.0100	1.0618
24437	KERNRVR	66.00	1	1	15.3	0.0	0.0	0.0	24437	KERNRVR	66.00	1.0100	1.0774
24464	MIDWIND	66.00	1	0	0.0	-5.0	-5.0	-5.0	24464	MIDWIND	66.00	1.0100	1.0682
24465	MORWIND	66.00	1	0	0.0	-32.0	-32.0	-32.0	24465	MORWIND	66.00	1.0100	1.0655
25632	TERAWND	115.00	1	1	13.9	-11.3	-11.3	-11.3	25632	TERAWND	115.00	1.0000	1.0051
25633	CAPWIND	115.00	1	1	12.4	-10.0	-10.0	-10.0	25633	CAPWIND	115.00	1.0000	1.1123
25634	BUCKWND	115.00	1	1	12.9	-6.5	-6.5	-6.5	25634	BUCKWND	115.00	1.0000	1.0022
25635	ALTWIND	115.00	1	1	30.9	-25.0	-25.0	-25.0	25635	ALTWIND	115.00	1.0000	0.9976
25636	RENWIND	115.00	1	1	7.8	-6.0	-6.0	-6.0	25636	RENWIND	115.00	1.0000	1.0049
25637	TRANWND	115.00	1	1	37.1	-11.5	-11.5	-11.5	25637	TRANWND	115.00	1.0000	1.0013
25639	SEAWIND	115.00	1	1	16.7	-13.5	-13.5	-13.5	25639	SEAWIND	115.00	1.0000	0.9899
25640	PANAERO	115.00	1	1	18.6	-13.5	-13.5	-13.5	25640	PANAERO	115.00	1.0000	0.9898
25645	VENWIND	115.00	1	1	37.4	-5.7	-5.7	-5.7	25645	VENWIND	115.00	1.0000	1.0065
25646	SANWIND	115.00	1	1	17.3	-13.5	-13.5	-13.5	25646	SANWIND	115.00	1.0000	0.9956
24783	RUSH	2.30	1	1	15.3	1.9	5.0	-2.5	24783	RUSH	2.30	1.0000	1.0000
24784	POOLUWD	6.90	1	1	13.3	3.0	6.5	-3.0	24784	POOLUWD	6.90	1.0000	1.0000
24732	KERRGEN	12.50	1	1	3.1	5.1	27.0	-14.0	24732	KERRGEN	12.50	1.0000	1.0000
24733	KERRMGEE	13.80	1	1	56.1	7.0	7.0	-3.0	24733	KERRMGE	13.80	1.0000	0.9804
24826	INDIGO	115.00	1	0	0.0	-6.0	-6.0	-6.0	24826	INDIGO	115.00	1.0000	1.0040
25651	WARNE1	13.80	1	1	38.7	6.2	12.2	-12.3	25651	WARNE1	13.80	1.0000	1.0000
25652	WARNE2	13.80	1	1	38.7	6.2	12.2	-12.3	25652	WARNE2	13.80	1.0000	1.0000
25653	ALAMO SC	13.80	1	1	4.1	-2.6	6.0	-6.0	25653	ALAMO S	13.80	1.0000	1.0000
24133	SANTIAGO	66.00	1	0	0.0	-3.4	8.5	-4.3	24133	SANTIAG	66.00	1.0450	1.0287
24127	S.CLARA	66.00	1	0	0.0	-3.4	24.5	-12.3	24127	S.CLARA	66.00	1.0080	1.0110
28190	WINTECX2	13.80	1	1	37.4	-0.0	28.0	-28.0	28190	WINTECX	13.80	1.0000	1.0000
28191	WINTECX1	13.80	1	1	37.4	-0.0	28.0	-28.0	28191	WINTECX	13.80	1.0000	1.0000
28180	WDT123	13.80	1	1	37.4	-0.0	28.0	-28.0	28180	WDT123	13.80	1.0000	1.0000
24062	HARBOR13	13.80	1	1	91.8	-9.0	40.0	-20.0	24062	HARBOR1	13.80	1.0000	1.0000
25510	HARBORG4	4.16	LP	1	10.2	-2.0	7.0	-2.0	24062	HARBOR1	13.80	1.0000	1.0000
24062	HARBOR13	13.80	HP	1	10.2	-1.0	7.0	-2.0	24062	HARBOR1	13.80	1.0000	1.0000
24815	GARNET	115.00	EQ	0	101.4	-50.7	-50.7	-50.7	24815	GARNET	115.00	1.0000	1.0022
28020	WDT123	115.00	1	1	23.5	-15.0	-15.0	-15.0	28020	WDT123	115.00	1.0000	1.0022
28060	SEAWEST	115.00	1	1	27.5	-14.8	-14.8	-14.8	28060	SEAWEST	115.00	1.0000	0.9976
28060	SEAWEST	115.00	2	1	27.8	-15.0	-15.0	-15.0	28060	SEAWEST	115.00	1.0000	0.9976
28061	WDT092	33.00	1	1	40.8	-22.0	-22.0	-22.0	28061	WDT092	33.00	1.0000	0.9765
28260	ALTAMSA4	115.00	1	1	24.8	-13.3	-13.3	-13.3	28260	ALTAMSA	115.00	1.0000	0.9899
28280	WDT053	33.00	1	1	26.5	-14.3	-14.3	-14.3	28280	WDT053	33.00	1.0000	0.9641
28000	TOT005ST	20.00	1	0	200.0	-12.3	160.0	-90.0	24350	TOT005	230.00	1.0000	1.0475
28001	TOT005CT	15.00	1	0	130.0	-12.3	80.0	-60.0	24350	TOT005	230.00	1.0000	1.0475
28002	TOT005CT	15.00	1	0	130.0	-12.3	80.0	-60.0	24350	TOT005	230.00	1.0000	1.0475
28003	TOT005CT	15.00	1	0	130.0	-12.3	80.0	-60.0	24350	TOT005	230.00	1.0000	1.0475
24718	ALTA31GT	13.80	31	0	60.0	2.1	41.0	-30.0	24718	ALTA31G	13.80	1.0000	1.0826
24719	ALTA 3ST	13.80	3	0	120.0	-1.2	58.0	-41.0	24719	ALTA 3S	13.80	1.0000	1.0826
24720	ALTA41GT	13.80	41	0	0.0	1.2	41.0	-30.0	24720	ALTA41G	13.80	1.0000	1.0826

2010 Light Spring - PRE CASE
CASE NAME: Vpp10lspPre914.sav

BUS-NO	NAME1	KV1	ID	ST	PGEN	QGEN	QMX	QMN	IREG	NAME2	KV2	VSCHED	V-ACT
24721	ALTA 4ST	13.80	4	0	0.0	-7.9	58.0	-41.0	24721	ALTA 4S	13.80	1.0000	1.0826
24734	ALTA32GT	13.80	32	0	80.0	5.1	41.0	-30.0	24734	ALTA32G	13.80	1.0000	1.0826
24735	ALTA42GT	13.80	42	0	0.0	1.2	41.0	-30.0	24735	ALTA42G	13.80	1.0000	1.0826
24921	TOT109-C	18.00	1	0	80.0	33.5	115.0	-61.0	24921	TOT109-	18.00	1.0300	1.0309
24922	TOT109-C	18.00	1	0	80.0	33.5	115.0	-61.0	24922	TOT109-	18.00	1.0300	1.0309
24923	TOT109-S	18.00	1	0	80.0	38.8	200.0	-100.0	24923	TOT109-	18.00	1.0300	1.0309
24924	TOT109-C	18.00	1	0	80.0	33.3	115.0	-61.0	24924	TOT109-	18.00	1.0300	1.0309
24925	TOT109-C	18.00	1	0	80.0	33.3	115.0	-61.0	24925	TOT109-	18.00	1.0300	1.0309
24926	TOT109-S	18.00	1	0	80.0	39.4	200.0	-100.0	24926	TOT109-	18.00	1.0300	1.0309
24999	DEVRSVC1	500.00	1	1	0.0	0.1	0.1	0.0	24999	DEVRSVC	500.00	1.0222	1.1132
24997	VALYSVC1	500.00	1	1	0.0	0.1	0.1	0.0	24997	VALYSVC	500.00	1.0209	1.1041
24927	AES1	13.80	1	1	110.3	-15.0	25.0	-15.0	24927	AES1	13.80	1.0000	1.0340
24928	AES2	13.80	2	1	110.3	-15.0	25.0	-15.0	24928	AES2	13.80	1.0000	1.0340
24929	AES3	13.80	3	1	110.3	-15.0	25.0	-15.0	24929	AES3	13.80	1.0000	1.0340
24999	DEVRSVC1	500.00	2	1	0.0	0.1	0.1	0.0	24999	DEVRSVC	500.00	1.0222	1.1132
24229	VALLEY-S	115.00	1	0	0.0	0.1	0.1	0.0	24229	VALLEY-	115.00	0.9830	1.0382
25991	VALYSVC2	115.00	1	1	0.0	0.0	100.0	0.0	24229	VALLEY-	115.00	0.9830	1.0382
25990	VALYSVC1	115.00	1	1	0.0	0.1	0.1	0.0	24160	VALLEYS	115.00	0.9830	1.0686
25711	TOT1201	0.57	1	0	25.5	1.6	8.4	-12.4	25711	TOT1201	0.57	1.0000	1.0060
25712	TOT1202	0.57	1	0	24.0	1.3	7.9	-11.6	25712	TOT1202	0.57	1.0000	1.0060
25713	TOT1203	0.57	1	0	25.5	1.1	8.4	-12.4	25713	TOT1203	0.57	1.0000	1.0060
25714	TOT1204	0.57	1	0	25.5	0.9	8.4	-12.4	25714	TOT1204	0.57	1.0000	1.0060
24234	RECTRSVC	230.00	1	1	0.0	0.1	0.1	0.0	24234	RECTRSV	230.00	1.0000	1.0086
28041	TOT139C1	19.50	1	1	11.4	-18.7	280.0	-200.0	28041	TOT139C	19.50	1.0460	1.0460
28042	TOT139C2	19.50	2	1	91.3	-19.9	280.0	-200.0	28042	TOT139C	19.50	1.0460	1.0460
28104	TOT032S1	22.00	S1	1	44.4	18.6	195.0	-120.0	28104	TOT032S	22.00	1.0200	1.0200
28103	TOT032G3	18.00	G3	0	166.7	90.0	90.0	-70.0	28103	TOT032G	18.00	1.0200	1.0200
28102	TOT032G2	18.00	G2	0	166.7	90.0	90.0	-70.0	28102	TOT032G	18.00	1.0200	1.0200
28101	TOT032G1	18.00	G1	0	166.7	90.0	90.0	-70.0	28101	TOT032G	18.00	1.0200	1.0200
24998	RERC	66.00	1	1	29.7	-0.8	15.0	-0.8	24998	RERC	66.00	0.9804	1.0266
24998	RERC	66.00	2	1	29.7	-0.8	15.0	-0.8	24998	RERC	66.00	0.9804	1.0266
24252	TOT12810	16.50	1	0	185.0	46.6	115.0	-95.0	24252	TOT1281	16.50	1.0000	1.0492
24253	TOT12810	16.50	1	0	185.0	46.4	115.0	-95.0	24253	TOT1281	16.50	1.0000	1.0492
24254	TOT12810	21.00	1	0	336.0	85.7	205.0	-170.0	24254	TOT1281	21.00	1.0000	1.0492
24257	TOT12820	16.50	1	0	185.0	46.6	115.0	-95.0	24257	TOT1282	16.50	1.0000	1.0492
24258	TOT12820	16.50	1	0	185.0	46.4	115.0	-95.0	24258	TOT1282	16.50	1.0000	1.0492
24259	TOT12820	21.00	1	0	336.0	85.7	205.0	-170.0	24259	TOT1282	21.00	1.0000	1.0492
28169	WDT169	13.80	1	0	49.9	2.2	16.4	-24.2	28169	WDT169	13.80	1.0000	1.0275
24902	VSTA	66.00	3	1	50.0	-12.5	15.0	-12.5	24902	VSTA	66.00	1.0230	1.0275
28201	TOT135G1	13.80	1	1	102.1	15.8	81.7	-48.0	28201	TOT135G	13.80	1.0000	1.0000
28202	TOT135G2	13.80	2	1	102.1	15.8	81.7	-48.0	28202	TOT135G	13.80	1.0000	1.0000
28203	TOT135G3	13.80	3	1	102.1	15.8	81.7	-48.0	28203	TOT135G	13.80	1.0000	1.0000
28204	TOT135G4	13.80	4	1	102.1	15.8	81.7	-48.0	28204	TOT135G	13.80	1.0000	1.0000
28205	TOT135G5	13.80	5	1	102.1	15.8	81.7	-48.0	28205	TOT135G	13.80	1.0000	1.0000
28888	WDT188	13.80	1	0	49.9	-14.4	16.4	-24.2	28888	WDT188	13.80	1.0000	1.0392
28057	TOT139G1	15.00	1	0	184.0	-0.1	138.0	-92.0	28056	TOT139D	230.00	0.9675	1.0328
28058	TOT139G2	15.00	2	0	184.0	-92.0	138.0	-92.0	28056	TOT139D	230.00	0.9675	1.0328
28059	TOT139G3	15.00	3	0	184.0	-92.0	138.0	-92.0	28056	TOT139D	230.00	0.9675	1.0328
28220	TOT138G2	15.00	2	1	206.0	49.4	103.0	-51.0	28220	TOT138G	15.00	1.0300	1.0300
28219	TOT138G1	15.00	1	1	206.0	49.4	103.0	-51.0	28219	TOT138G	15.00	1.0300	1.0300
25500	P500_G5	18.00	5	1	178.4	21.9	60.0	-60.0	25500	P500_G5	18.00	1.0300	1.0300
25501	P500_G6	18.00	6	1	178.4	21.9	60.0	-60.0	25501	P500_G6	18.00	1.0300	1.0300
25502	P500_S7	18.00	7	1	285.5	33.8	160.0	-80.0	25502	P500_S7	18.00	1.0300	1.0300
24157	WALNUT	66.00	1	0	49.9	-12.3	16.4	-24.2	24157	WALNUT	66.00	1.0380	1.0313
99112	ELSNORE2	16.00	1	1	256.2	-121.4	122.0	-122.0	99112	ELSNORE	16.00	1.0000	1.0000
99110	ELSNORE1	16.00	1	1	256.2	-121.4	122.0	-122.0	99110	ELSNORE	16.00	1.0000	1.0000
24075	LAGUBELL	66.00	WC	1	50.9	16.4	16.4	-24.2	24075	LAGUBEL	66.00	1.0150	1.0057
28213	WDT182G1	13.80	1	1	103.5	-6.9	80.0	-50.0	28213	WDT182G	13.80	1.0000	1.0000
28214	WDT182G2	13.80	1	1	103.5	-6.9	80.0	-50.0	28214	WDT182G	13.80	1.0000	1.0000
28215	WDT182G3	13.80	1	1	103.5	-6.9	80.0	-50.0	28215	WDT182G	13.80	1.0000	1.0000

2010 Light Spring - PRE CASE
CASE NAME: Vpp10lspPre914.sav

BUS-NO	NAME1	KV1	ID	ST	PGEN	QGEN	QMX	QMN	IREG	NAME2	KV2	VSCHED	V-ACT
28216	WDT182G4	13.80	1	1	103.5	-7.0	80.0	-50.0	28216	WDT182G	13.80	1.0000	1.0000
28217	WDT182G5	13.80	1	1	103.5	-7.0	80.0	-50.0	28217	WDT182G	13.80	1.0000	1.0000
24401	ANTELOPE	230.00	1	1	1296.0	-424.0	-424.0	-424.0	24401	ANTELOP	230.00	1.0200	0.9983
28296	TOT166C1	16.50	1	1	234.0	75.4	75.4	-111.2	28296	TOT166C	16.50	1.0364	1.0062
28297	TOT166C2	16.50	2	1	234.0	75.4	75.4	-111.2	28297	TOT166C	16.50	1.0364	1.0062
28298	TOT166S	18.00	1	1	305.6	98.5	98.5	-145.2	28298	TOT166S	18.00	1.0364	1.0062
29700	TEH_GENS	230.00	1	1	3029.5	-692.0	1500.0	-1500.0	29700	TEH_GEN	230.00	1.0000	1.0000

** gens ** Page 1 [vpp10lsppost914.sav] Thu Sep 07 13:52:27 2006

2010 Light Spring - Post Vernon 914 MW
CASE NAME: Vpp10lspPost914.sav

BUS-NO	NAME1	KV1	ID	ST	PGEN	QGEN	QMX	QMN	IREG	NAME2	KV2	VSCHED	V-ACT
24656	VERNNST1	19.00	1	1	357.4	33.6	124.2	-79.6	24656	VERNNST	19.00	1.0050	1.0050
24654	VERNNCT3	15.00	1	1	192.8	23.6	95.9	-65.1	24654	VERNNCT	15.00	1.0050	1.0050
24652	VERNNCT2	15.00	1	1	192.8	23.6	95.9	-65.1	24652	VERNNCT	15.00	1.0050	1.0050
24651	VERNNCT1	15.00	1	1	192.8	23.6	95.9	-65.1	24651	VERNNCT	15.00	1.0050	1.0050
24456	BOREL	66.00	1	0	10.0	0.0	5.0	-2.5	24456	BOREL	66.00	1.0000	1.0000
28055	TOT018S2	18.00	S2	0	0.0	10.5	53.0	-38.0	28055	TOT018S	18.00	1.0000	1.0005
28054	TOT018G3	18.00	G3	0	0.0	32.0	105.0	-76.0	28054	TOT018G	18.00	1.0000	1.0005
28053	TOT018S1	18.00	S1	0	0.0	33.0	109.0	-78.0	28053	TOT018S	18.00	1.0000	1.0005
28052	TOT018G2	18.00	G2	0	0.0	32.0	105.0	-76.0	28052	TOT018G	18.00	1.0000	1.0005
28051	TOT018G1	18.00	G1	0	0.0	32.0	105.0	-76.0	28051	TOT018G	18.00	1.0000	1.0005
24001	ALAMT1 G	18.00	1	1	158.6	-50.0	75.0	-50.0	24001	ALAMT1	18.00	1.0000	1.0123
24002	ALAMT2 G	18.00	2	1	158.6	-50.0	75.0	-50.0	24002	ALAMT2	18.00	1.0000	1.0123
24003	ALAMT3 G	18.00	3	1	297.4	26.1	150.0	-100.0	24003	ALAMT3	18.00	1.0000	1.0000
24004	ALAMT4 G	18.00	4	1	297.4	26.1	150.0	-100.0	24004	ALAMT4	18.00	1.0000	1.0000
24005	ALAMT5 G	20.00	5	1	446.1	-38.6	240.0	-120.0	24005	ALAMT5	20.00	1.0000	1.0000
24161	ALAMT6 G	20.00	6	1	446.1	-38.6	210.0	-150.0	24161	ALAMT6	20.00	1.0000	1.0000
24162	ALAMT7 G	16.00	7	0	0.0	50.0	50.0	-25.0	24162	ALAMT7	16.00	1.0250	1.0014
25203	ANAHEIMG	13.80	1	0	0.0	11.7	25.0	-12.0	25203	ANAHEIM	13.80	1.0000	1.0098
24009	APPGEN1G	13.80	1	0	0.0	6.4	42.0	0.0	24009	APPGEN1	13.80	1.0000	1.0183
24010	APPGEN2G	13.80	2	0	0.0	6.4	42.0	0.0	24010	APPGEN2	13.80	1.0000	1.0183
24011	ARCO 1G	13.80	1	1	79.3	-4.4	40.0	-20.0	24011	ARCO 1	13.80	1.0000	1.0000
24012	ARCO 2G	13.80	2	1	79.3	-4.4	40.0	-20.0	24012	ARCO 2	13.80	1.0000	1.0000
24013	ARCO 3G	13.80	3	1	79.3	-4.4	40.0	-20.0	24013	ARCO 3	13.80	1.0000	1.0000
24014	ARCO 4G	13.80	4	1	79.3	-4.4	40.0	-20.0	24014	ARCO 4	13.80	1.0000	1.0000
24163	ARCO 5G	13.80	5	1	39.7	-1.3	25.0	-20.0	24163	ARCO 5	13.80	1.0000	1.0000
24164	ARCO 6G	13.80	6	1	39.7	-1.2	25.0	-20.0	24164	ARCO 6	13.80	1.0000	1.0000
24703	BLM E7G	13.80	7	0	20.0	-3.8	15.0	-7.5	24703	BLM E7	13.80	1.0000	1.0344
24704	BLM E8G	13.80	8	0	20.0	-3.8	15.0	-7.5	24704	BLM E8	13.80	1.0000	1.0344
24705	BLM W9G	13.80	9	0	20.0	-4.6	12.0	-6.0	24705	BLM W9	13.80	1.0000	1.0346
24708	BORAX I	13.80	1	0	27.0	-10.7	22.0	-11.0	24708	BORAX I	13.80	1.0000	1.0097
24018	BRIGEN	13.80	1	1	29.7	-8.0	17.0	-8.0	24018	BRIGEN	13.80	1.0000	1.0301
24709	BSPHYD26	2.20	26	1	9.9	2.0	7.0	0.0	24709	BSPHYD2	2.20	1.0000	1.0000
24710	BSPHYD34	2.20	34	1	9.9	-0.3	7.0	-3.0	24710	BSPHYD3	2.20	1.0000	1.0000
24711	CALGEN1G	13.80	1	0	30.0	-2.3	15.0	-7.5	24711	CALGEN1	13.80	1.0000	1.0085
24712	CALGEN2G	13.80	2	0	25.0	-2.6	12.0	-6.0	24712	CALGEN2	13.80	1.0000	1.0085
24713	CALGEN3G	13.80	3	0	25.0	-2.6	12.0	-6.0	24713	CALGEN3	13.80	1.0000	1.0085
24020	WDT041	13.80	1	1	29.7	0.0	17.0	0.0	24020	WDT041	13.80	1.0000	1.0461
24022	CHEVGEN1	13.80	1	1	29.7	-0.0	19.0	0.0	24022	CHEVGEN	13.80	1.0000	1.0641
24023	CHEVGEN2	13.80	2	1	29.7	-0.0	19.0	0.0	24023	CHEVGEN	13.80	1.0000	1.0641
24026	CIMGEN	13.80	1	1	29.7	-0.0	13.0	0.0	24026	CIMGEN	13.80	1.0000	1.0384
24027	COLDGEN	13.80	1	1	27.8	-7.0	14.0	-7.0	24027	COLDGEN	13.80	1.0000	1.0000
24714	ALTA 1G	13.80	1	0	60.0	6.0	32.0	-16.0	24714	ALTA 1	13.80	1.0000	0.9816
24715	ALTA 2G	13.80	2	0	60.0	6.4	40.0	-20.0	24715	ALTA 2	13.80	1.0000	0.9816
24726	CSA DIAB	4.16	1	1	14.9	-2.5	15.0	-8.0	24726	CSA DIA	4.16	1.0000	1.0000
24030	DELGEN	13.80	1	1	44.6	0.0	20.0	0.0	24030	DELGEN	13.80	1.0000	1.0381
25648	DVLCYN1G	13.80	1	1	49.6	-15.0	30.0	-15.0	25648	DVLCYN1	13.80	1.0000	1.0427
25649	DVLCYN2G	13.80	2	1	54.5	-15.0	30.0	-15.0	25649	DVLCYN2	13.80	1.0000	1.0426
25603	DVLCYN3G	13.80	3	0	0.0	-15.0	30.0	-15.0	25603	DVLCYN3	13.80	1.0000	1.0464
25604	DVLCYN4G	13.80	4	0	0.0	-15.0	30.0	-15.0	25604	DVLCYN4	13.80	1.0000	1.0464
25605	EDMON1AP	14.40	1	1	-59.5	0.5	1.0	0.0	25605	EDMON1A	14.40	1.0000	0.9994
25606	EDMON2AP	14.40	2	1	-59.5	0.5	1.0	0.0	25606	EDMON2A	14.40	1.0000	0.9993
25607	EDMON3AP	14.40	3	1	-59.5	0.5	1.0	0.0	25607	EDMON3A	14.40	1.0000	0.9950
25607	EDMON3AP	14.40	4	1	-59.5	0.5	1.0	0.0	25607	EDMON3A	14.40	1.0000	0.9950
25608	EDMON4AP	14.40	5	0	-60.0	0.5	1.0	0.0	25608	EDMON4A	14.40	1.0000	1.0002
25608	EDMON4AP	14.40	6	0	-60.0	0.5	1.0	0.0	25608	EDMON4A	14.40	1.0000	1.0002
25609	EDMON5AP	14.40	7	0	0.0	0.5	1.0	0.0	25609	EDMON5A	14.40	1.0000	1.0002
25609	EDMON5AP	14.40	8	0	0.0	0.5	1.0	0.0	25609	EDMON5A	14.40	1.0000	1.0002
25610	EDMON6AP	14.40	9	0	0.0	0.5	1.0	0.0	25610	EDMON6A	14.40	1.0000	1.0002
25610	EDMON6AP	14.40	10	0	0.0	0.5	1.0	0.0	25610	EDMON6A	14.40	1.0000	1.0002
25611	EDMON7AP	14.40	11	0	0.0	0.5	1.0	0.0	25611	EDMON7A	14.40	1.0000	1.0002

2010 Light Spring - Post Vernon 914 MW
CASE NAME: Vpp10lspPost914.sa

BUS-NO	NAME1	KV1	ID	ST	PGEN	QGEN	QMX	QMN	IREG	NAME2	KV2	VSCHED	V-ACT
25611	EDMON7AP	14.40	12	0	0.0	0.5	1.0	0.0	25611	EDMON7A	14.40	1.0000	1.0002
25612	EDMON8AP	14.40	13	0	0.0	0.5	1.0	0.0	25612	EDMON8A	14.40	1.0000	1.0002
25612	EDMON8AP	14.40	14	0	0.0	0.5	1.0	0.0	25612	EDMON8A	14.40	1.0000	1.0002
24045	ELSEG1 G	18.00	1	0	0.0	-18.1	75.0	-50.0	24045	ELSEG1	18.00	1.0300	1.0683
24046	ELSEG2 G	18.00	2	0	0.0	-20.1	75.0	-50.0	24046	ELSEG2	18.00	1.0300	1.0683
24047	ELSEG3 G	18.00	3	1	327.2	41.4	145.0	-100.0	24047	ELSEG3	18.00	1.0300	1.0300
24048	ELSEG4 G	18.00	4	1	327.2	41.4	145.0	-100.0	24048	ELSEG4	18.00	1.0300	1.0300
24050	MTNVIST1	15.50	1	0	0.0	22.2	55.0	-40.0	24050	MTNVIST	15.50	1.0300	1.0797
24051	MTNVIST2	15.50	2	0	0.0	22.2	55.0	-40.0	24051	MTNVIST	15.50	1.0300	1.0797
24052	MTNVIST3	18.00	3	0	100.0	140.0	140.0	-100.0	24052	MTNVIST	18.00	1.0300	1.0327
24053	MTNVIST4	18.00	4	1	99.1	-4.9	140.0	-100.0	24053	MTNVIST	18.00	1.0300	1.0300
24054	MTNVIST5	16.00	5	0	0.0	45.9	50.0	-25.0	24054	MTNVIST	16.00	1.0300	1.0356
24060	GROWGEN	13.80	1	1	27.8	-0.0	14.0	0.0	24060	GROWGEN	13.80	1.0000	1.0048
24905	RVCANAL1	13.80	1	0	0.0	1.2	17.0	-10.0	24905	RVCANAL	13.80	1.0000	1.0450
24906	RVCANAL2	13.80	2	0	0.0	1.2	17.0	-10.0	24906	RVCANAL	13.80	1.0000	1.0450
24907	RVCANAL3	13.80	3	0	0.0	2.2	25.0	-15.0	24907	RVCANAL	13.80	1.0000	1.0450
24908	RVCANAL4	13.80	4	0	0.0	2.2	25.0	-15.0	24908	RVCANAL	13.80	1.0000	1.0450
24063	HILLGEN	13.80	1	1	24.8	0.0	25.0	0.0	24063	HILLGEN	13.80	1.0000	1.0303
24064	HINSON	66.00	1	0	0.0	0.0	23.5	-12.0	24064	HINSON	66.00	1.0150	1.0463
24066	HUNT1 G	13.80	1	1	198.3	30.1	130.0	-65.0	24066	HUNT1	13.80	1.0200	1.0200
24067	HUNT2 G	13.80	2	1	198.3	30.1	130.0	-65.0	24067	HUNT2	13.80	1.0200	1.0200
24167	HUNT3 G	13.80	3	1	198.3	-0.0	140.0	-70.0	24167	HUNT3	13.80	1.0000	1.0000
24168	HUNT4 G	13.80	4	1	198.3	-0.2	140.0	-70.0	24168	HUNT4	13.80	1.0000	1.0000
24169	HUNT5 G	16.00	5	0	0.0	-5.6	130.0	-25.0	24169	HUNT5	16.00	1.0000	1.0169
24070	ICEGEN	13.80	1	1	24.8	0.0	22.0	0.0	24070	ICEGEN	13.80	1.0000	1.0350
24071	INLAND	13.80	1	1	29.7	0.0	15.0	0.0	24071	INLAND	13.80	1.0000	1.0589
24078	LBEACH1G	13.80	1	0	0.0	2.7	30.0	-15.0	24078	LBEACH1	13.80	1.0000	1.0231
24170	LBEACH2G	13.80	2	0	40.0	-0.3	30.0	-15.0	24170	LBEACH2	13.80	1.0000	1.0463
24171	LBEACH3G	13.80	3	0	0.0	1.8	30.0	-15.0	24171	LBEACH3	13.80	1.0000	1.0231
24172	LBEACH4G	13.80	4	0	0.0	8.3	30.0	-15.0	24172	LBEACH4	13.80	1.0000	1.0231
24173	LBEACH5G	13.80	5	0	0.0	0.1	30.0	-15.0	24173	LBEACH5	13.80	1.0000	1.0405
24174	LBEACH6G	13.80	6	0	0.0	0.1	30.0	-15.0	24174	LBEACH6	13.80	1.0000	1.0405
24079	LBEACH7G	13.80	7	0	0.0	-0.2	30.0	-15.0	24079	LBEACH7	13.80	1.0000	1.0405
24080	LBEACH8G	13.80	8	0	0.0	11.0	48.0	-34.0	24080	LBEACH8	13.80	1.0000	1.0231
24081	LBEACH9G	13.80	9	0	0.0	8.3	30.0	-15.0	24081	LBEACH9	13.80	1.0000	1.0231
24737	LUZ8 G	13.80	8	1	59.5	-20.0	40.0	-20.0	24737	LUZ8 G	13.80	1.0000	1.0529
24738	LUZ9 G	13.80	9	1	59.5	-20.0	40.0	-20.0	24738	LUZ9 G	13.80	1.0000	1.0529
24089	MANDLY1G	13.80	1	0	100.0	6.7	130.0	-67.5	24089	MANDLY1	13.80	1.0000	0.9920
24090	MANDLY2G	13.80	2	0	0.0	5.3	130.0	-67.5	24090	MANDLY2	13.80	1.0000	0.9920
24222	MANDLY3G	16.00	3	0	0.0	3.8	130.0	-67.5	24222	MANDLY3	16.00	1.0000	0.9943
24740	MC GEN	13.80	1	0	55.0	-11.2	75.0	-35.0	24740	MC GEN	13.80	1.0300	1.0323
24094	MOBGEN	13.80	1	1	39.7	-0.0	20.0	0.0	24094	MOBGEN	13.80	1.0000	1.0464
24742	MOGEN G	13.80	1	1	56.5	-8.4	27.0	-13.0	24742	MOGEN	13.80	1.0000	1.0000
24095	MOHAV1CC	22.00	1	0	0.0	25.3	350.0	-150.0	24095	MOHAV1C	22.00	1.0000	1.0535
24096	MOHAV2CC	22.00	2	0	0.0	54.6	350.0	-150.0	24096	MOHAV2C	22.00	1.0000	1.0535
24744	NAVYII4G	13.80	4	1	24.8	-3.2	12.0	-6.0	24744	NAVYII4	13.80	1.0000	1.0000
24745	NAVYII5G	13.80	5	1	24.8	-3.2	12.0	-6.0	24745	NAVYII5	13.80	1.0000	1.0000
24746	NAVYII6G	13.80	6	1	24.8	-3.2	12.0	-6.0	24746	NAVYII6	13.80	1.0000	1.0000
24211	OLINDA	66.00	1	0	0.0	0.0	3.0	-1.8	24211	OLINDA	66.00	1.0450	1.0441
24102	OMAR 1G	13.80	1	1	74.4	-0.0	14.3	0.0	24102	OMAR 1	13.80	1.0000	1.0434
24103	OMAR 2G	13.80	2	1	74.4	-0.0	14.3	0.0	24103	OMAR 2	13.80	1.0000	1.0434
24104	OMAR 3G	13.80	3	0	75.0	-0.0	14.3	0.0	24104	OMAR 3	13.80	1.0000	1.0494
24105	OMAR 4G	13.80	4	0	75.0	-20.0	14.3	-20.0	24105	OMAR 4	13.80	1.0000	1.0494
24107	ORMOND1G	26.00	1	0	100.0	33.2	400.0	-240.0	24107	ORMOND1	26.00	1.0000	0.9759
24108	ORMOND2G	26.00	2	0	200.0	35.5	400.0	-240.0	24108	ORMOND2	26.00	1.0000	0.9759
24747	OXBOW G1	13.80	1	1	52.5	-0.0	27.0	0.0	24747	OXBOW G	13.80	1.0000	1.0129
24110	OXGEN	13.80	1	1	33.7	-0.0	17.0	0.0	24110	OXGEN	13.80	1.0000	1.0109
24113	PANDOL	13.80	1	1	54.5	-3.1	25.0	-12.0	24113	PANDOL	13.80	1.0000	1.0000
24422	PALMDALE	66.00	1	0	0.0	-12.0	0.5	-0.3	24422	PALMDAL	66.00	1.0100	1.0156
25617	PEARBMAP	13.20	1	0	0.0	1.0	1.0	0.0	25617	PEARBMA	13.20	1.0000	1.0029

2010 Light Spring - Post Vernon 914 MW
CASE NAME: Vpp10lspPost914.sa

BUS-NO	NAME1	KV1	ID	ST	PGEN	QGEN	QMX	QMN	IREG	NAME2	KV2	VSCHED	V-ACT
25617	PEARBMAP	13.20	2	0	0.0	1.0	1.0	0.0	25617	PEARBMA	13.20	1.0000	1.0029
25617	PEARBMAP	13.20	3	0	0.0	1.0	1.0	0.0	25617	PEARBMA	13.20	1.0000	1.0029
25618	PEARBMBP	13.20	4	0	0.0	1.0	1.0	0.0	25618	PEARBMB	13.20	1.0000	1.0029
25618	PEARBMBP	13.20	5	0	0.0	1.0	1.0	0.0	25618	PEARBMB	13.20	1.0000	1.0029
25618	PEARBMBP	13.20	6	0	0.0	1.0	1.0	0.0	25618	PEARBMB	13.20	1.0000	1.0029
25619	PEARBMCP	13.80	7	1	-21.8	0.5	1.0	0.0	25619	PEARBMC	13.80	1.0000	1.0030
25619	PEARBMCP	13.80	8	0	0.0	0.5	1.0	0.0	25619	PEARBMC	13.80	1.0000	1.0030
25620	PEARBMDP	13.80	9	0	0.0	0.5	1.0	0.0	25620	PEARBMD	13.80	1.0000	1.0029
24118	PITCHGEN	13.80	1	1	29.7	-0.0	15.0	0.0	24118	PITCHGE	13.80	1.0000	1.0181
24119	PROCGEN	13.80	1	1	50.6	-0.0	26.0	0.0	24119	PROCGEN	13.80	1.0000	1.0106
24120	PULPGEN	13.80	1	1	34.7	0.0	20.0	0.0	24120	PULPGEN	13.80	1.0000	1.0047
24121	REDON5 G	18.00	5	1	163.6	-50.0	75.0	-50.0	24121	REDON5	18.00	1.0300	1.0362
24122	REDON6 G	18.00	6	1	143.8	-50.0	75.0	-50.0	24122	REDON6	18.00	1.0300	1.0396
24123	REDON7 G	20.00	7	1	475.9	178.8	210.0	-150.0	24123	REDON7	20.00	1.0300	1.0300
24124	REDON8 G	20.00	8	1	475.9	179.9	210.0	-150.0	24124	REDON8	20.00	1.0300	1.0300
24914	MTNVIEW1	13.80	1	0	0.0	-1.8	30.0	-15.0	24914	MTNVIEW	13.80	1.0000	1.0452
24915	MTNVIEW2	13.80	2	0	0.0	-1.2	30.0	-15.0	24915	MTNVIEW	13.80	1.0000	1.0452
24129	S.ONOFR2	22.00	2	1	1050.9	198.7	550.0	-410.0	24129	S.ONOFR	22.00	1.0200	1.0200
24130	S.ONOFR3	22.00	3	1	1070.7	199.8	550.0	-410.0	24130	S.ONOFR	22.00	1.0200	1.0200
24136	SEAWEST	230.00	1	0	0.0	12.7	15.0	0.0	24136	SEAWEST	230.00	1.0000	1.0038
24751	SEGS 1G	13.80	1	1	19.8	-5.0	10.0	-5.0	24751	SEGS 1	13.80	1.0000	1.0003
24752	SEGS 2G	13.80	2	1	29.7	-4.5	10.0	-5.0	24752	SEGS 2	13.80	1.0000	1.0000
24139	SERRFGEN	13.80	1	1	32.7	0.0	20.0	0.0	24139	SERRFGE	13.80	1.0000	1.0461
24140	SIMPSON	13.80	1	1	36.7	-0.0	20.0	0.0	24140	SIMPSON	13.80	1.0000	1.0383
24754	SUNGEN3G	13.80	3	1	33.7	-1.8	17.0	-8.0	24754	SUNGEN3	13.80	1.0000	1.0000
24755	SUNGEN4G	13.80	4	1	33.7	-1.8	17.0	-8.0	24755	SUNGEN4	13.80	1.0000	1.0000
24756	SUNGEN5G	13.80	5	1	33.7	-1.8	17.0	-8.0	24756	SUNGEN5	13.80	1.0000	1.0000
24757	SUNGEN6G	13.80	6	1	34.7	-1.6	17.0	-8.0	24757	SUNGEN6	13.80	1.0000	1.0000
24758	SUNGEN7G	13.80	7	1	34.7	-1.6	17.0	-8.0	24758	SUNGEN7	13.80	1.0000	1.0000
24143	SYCCYN1G	13.80	1	1	69.4	-0.0	14.3	0.0	24143	SYCCYN1	13.80	1.0000	1.0437
24144	SYCCYN2G	13.80	2	1	69.4	-0.0	14.3	0.0	24144	SYCCYN2	13.80	1.0000	1.0437
24145	SYCCYN3G	13.80	3	1	69.4	-0.0	14.3	0.0	24145	SYCCYN3	13.80	1.0000	1.0437
24146	SYCCYN4G	13.80	4	1	69.4	-0.0	14.3	0.0	24146	SYCCYN4	13.80	1.0000	1.0437
24148	TENNGEN1	13.80	1	1	21.8	-0.0	15.0	0.0	24148	TENNGEN	13.80	1.0000	1.0182
24149	TENNGEN2	13.80	2	1	21.8	-0.0	15.0	0.0	24149	TENNGEN	13.80	1.0000	1.0182
24150	ULTRAGEN	13.80	1	1	40.6	0.0	9.8	0.0	24150	ULTRAGE	13.80	1.0000	1.0024
24159	WILLAMET	13.80	1	1	24.8	0.0	15.0	0.0	24159	WILLAME	13.80	1.0000	1.0110
24160	VALLEYSC	115.00	1	0	0.0	0.1	0.1	0.0	24160	VALLEYS	115.00	0.9830	1.0687
24152	VESTAL	66.00	1	0	0.0	0.0	25.0	-12.5	24152	VESTAL	66.00	1.0300	1.0028
24902	VSTA	66.00	1	0	0.0	0.0	1.5	-0.8	24902	VSTA	66.00	1.0230	1.0272
24319	EASTWOOD	13.80	1	1	89.2	-23.8	97.0	-50.0	24319	EASTWOO	13.80	1.0000	1.0000
24306	B CRK1-1	7.90	1	1	9.9	7.2	7.2	-3.1	24306	B CRK1-	7.90	1.0000	0.9694
24306	B CRK1-1	7.90	2	1	9.9	6.1	6.1	-2.8	24306	B CRK1-	7.90	1.0000	0.9694
24307	B CRK1-2	13.20	3	1	14.9	-2.2	6.8	-2.2	24307	B CRK1-	13.20	1.0000	1.0179
24307	B CRK1-2	13.20	4	1	19.8	-2.0	5.0	-2.0	24307	B CRK1-	13.20	1.0000	1.0179
24308	B CRK2-1	13.80	1	1	29.7	5.3	26.4	-35.0	24308	B CRK2-	13.80	1.0000	1.0000
24308	B CRK2-1	13.80	2	1	29.7	5.3	28.5	-35.0	24308	B CRK2-	13.80	1.0000	1.0000
24309	B CRK2-2	7.60	3	1	9.9	4.2	6.0	-4.0	24309	B CRK2-	7.60	1.0000	1.0000
24309	B CRK2-2	7.60	4	1	9.9	4.2	6.0	-4.0	24309	B CRK2-	7.60	1.0000	1.0000
24310	B CRK2-3	6.60	5	1	9.9	-2.7	4.4	-2.7	24310	B CRK2-	6.60	1.0000	1.0172
24310	B CRK2-3	6.60	6	1	9.9	-2.7	5.0	-2.7	24310	B CRK2-	6.60	1.0000	1.0172
24311	B CRK3-1	13.80	1	1	24.8	10.0	10.0	-8.3	24311	B CRK3-	13.80	1.0000	0.9791
24311	B CRK3-1	13.80	2	1	24.8	10.0	10.0	-7.0	24311	B CRK3-	13.80	1.0000	0.9791
24312	B CRK3-2	13.80	3	1	24.8	5.9	10.0	-7.0	24312	B CRK3-	13.80	1.0000	1.0000
24312	B CRK3-2	13.80	4	1	24.8	5.9	13.5	-7.5	24312	B CRK3-	13.80	1.0000	1.0000
24313	B CRK3-3	13.80	5	1	24.8	5.2	17.5	-10.0	24313	B CRK3-	13.80	1.0000	1.0000
24314	B CRK 4	12.00	41	0	30.0	10.2	10.2	-10.0	24314	B CRK 4	12.00	1.0000	0.9518
24314	B CRK 4	12.00	42	0	25.0	9.0	13.6	-10.4	24314	B CRK 4	12.00	1.0000	0.9518
24315	B CRK 8	13.80	81	0	20.0	-2.5	5.5	-2.5	24315	B CRK 8	13.80	1.0000	0.9938
24315	B CRK 8	13.80	82	0	25.0	-2.5	5.5	-2.5	24315	B CRK 8	13.80	1.0000	0.9938

2010 Light Spring - Post Vernon 914 MW
CASE NAME: Vpp10lspPost914.sa

BUS-NO	NAME1	KV1	ID	ST	PGEN	QGEN	QMX	QMN	IREG	NAME2	KV2	VSCHED	V-ACT
24317	MAMOTH1G	13.80	1	0	80.0	-7.6	26.4	-35.0	24317	MAMOTH1	13.80	1.0000	0.9922
24318	MAMOTH2G	13.80	2	0	80.0	-7.4	28.5	-35.0	24318	MAMOTH2	13.80	1.0000	0.9922
25411	EAGLEMP1	6.90	1	1	-9.2	0.3	0.5	0.0	25411	EAGLEMP	6.90	1.0000	1.0419
25411	EAGLEMP1	6.90	2	1	-9.2	0.3	0.5	0.0	25411	EAGLEMP	6.90	1.0000	1.0419
25411	EAGLEMP1	6.90	3	1	-9.2	0.3	0.5	0.0	25411	EAGLEMP	6.90	1.0000	1.0419
25411	EAGLEMP1	6.90	4	1	-9.2	0.3	0.5	0.0	25411	EAGLEMP	6.90	1.0000	1.0419
25412	EAGLEMP2	6.90	5	0	0.0	0.5	0.5	0.0	25412	EAGLEMP	6.90	1.0000	1.0419
25412	EAGLEMP2	6.90	6	1	-9.2	0.3	0.5	0.0	25412	EAGLEMP	6.90	1.0000	1.0419
25412	EAGLEMP2	6.90	7	1	-9.2	0.3	0.5	0.0	25412	EAGLEMP	6.90	1.0000	1.0419
25412	EAGLEMP2	6.90	8	1	-9.2	0.3	0.5	0.0	25412	EAGLEMP	6.90	1.0000	1.0419
25412	EAGLEMP2	6.90	9	1	-9.2	0.3	0.5	0.0	25412	EAGLEMP	6.90	1.0000	1.0419
25413	GENE P1	6.90	1	1	-6.6	0.1	0.2	0.0	25413	GENE P	6.90	1.0000	1.0420
25413	GENE P1	6.90	2	1	-6.6	0.1	0.2	0.0	25413	GENE P	6.90	1.0000	1.0420
25413	GENE P1	6.90	3	1	-6.6	0.1	0.2	0.0	25413	GENE P	6.90	1.0000	1.0420
25413	GENE P1	6.90	4	1	-6.6	0.1	0.2	0.0	25413	GENE P	6.90	1.0000	1.0420
25414	GENE P2	6.90	5	0	0.0	0.1	0.2	0.0	25414	GENE P	6.90	1.0000	1.0344
25414	GENE P2	6.90	6	1	-6.6	0.1	0.2	0.0	25414	GENE P	6.90	1.0000	1.0344
25414	GENE P2	6.90	7	1	-6.6	0.1	0.2	0.0	25414	GENE P	6.90	1.0000	1.0344
25414	GENE P2	6.90	8	1	-6.6	0.1	0.2	0.0	25414	GENE P	6.90	1.0000	1.0344
25414	GENE P2	6.90	9	1	-6.6	0.1	0.2	0.0	25414	GENE P	6.90	1.0000	1.0344
25415	INTAKEP1	6.90	1	1	-6.6	0.1	0.2	0.0	25415	INTAKEP	6.90	1.0000	1.0289
25415	INTAKEP1	6.90	2	1	-6.6	0.1	0.2	0.0	25415	INTAKEP	6.90	1.0000	1.0289
25415	INTAKEP1	6.90	3	1	-6.6	0.1	0.2	0.0	25415	INTAKEP	6.90	1.0000	1.0289
25415	INTAKEP1	6.90	4	1	-6.6	0.1	0.2	0.0	25415	INTAKEP	6.90	1.0000	1.0289
25416	INTAKEP2	6.90	5	0	0.0	0.1	0.2	0.0	25416	INTAKEP	6.90	1.0000	1.0241
25416	INTAKEP2	6.90	6	1	-6.6	0.1	0.2	0.0	25416	INTAKEP	6.90	1.0000	1.0241
25416	INTAKEP2	6.90	7	1	-6.6	0.1	0.2	0.0	25416	INTAKEP	6.90	1.0000	1.0241
25416	INTAKEP2	6.90	8	1	-6.6	0.1	0.2	0.0	25416	INTAKEP	6.90	1.0000	1.0241
25416	INTAKEP2	6.90	9	1	-6.6	0.1	0.2	0.0	25416	INTAKEP	6.90	1.0000	1.0241
25417	IRONMTP1	6.90	1	1	-3.2	0.1	0.2	0.0	25417	IRONMTP	6.90	1.0000	1.0523
25417	IRONMTP1	6.90	2	1	-3.2	0.1	0.2	0.0	25417	IRONMTP	6.90	1.0000	1.0523
25417	IRONMTP1	6.90	3	1	-3.2	0.1	0.2	0.0	25417	IRONMTP	6.90	1.0000	1.0523
25417	IRONMTP1	6.90	4	1	-3.2	0.1	0.2	0.0	25417	IRONMTP	6.90	1.0000	1.0523
25418	IRONMTP2	6.90	5	0	0.0	0.1	0.2	0.0	25418	IRONMTP	6.90	1.0000	1.0523
25418	IRONMTP2	6.90	6	1	-3.2	0.1	0.2	0.0	25418	IRONMTP	6.90	1.0000	1.0523
25418	IRONMTP2	6.90	7	1	-3.2	0.1	0.2	0.0	25418	IRONMTP	6.90	1.0000	1.0523
25418	IRONMTP2	6.90	8	1	-3.2	0.1	0.2	0.0	25418	IRONMTP	6.90	1.0000	1.0523
25418	IRONMTP2	6.90	9	1	-3.2	0.1	0.2	0.0	25418	IRONMTP	6.90	1.0000	1.0523
25419	JHINDSP1	6.90	1	1	-9.2	0.3	0.5	0.0	25419	JHINDSP	6.90	1.0000	1.0493
25419	JHINDSP1	6.90	2	1	-9.2	0.3	0.5	0.0	25419	JHINDSP	6.90	1.0000	1.0493
25419	JHINDSP1	6.90	3	1	-9.2	0.3	0.5	0.0	25419	JHINDSP	6.90	1.0000	1.0493
25419	JHINDSP1	6.90	4	1	-9.2	0.3	0.5	0.0	25419	JHINDSP	6.90	1.0000	1.0493
25420	JHINDSP2	6.90	5	0	0.0	0.5	0.5	0.0	25420	JHINDSP	6.90	1.0000	1.0493
25422	ETI MWDG	13.80	1	1	6.6	-12.4	15.1	-14.6	25422	ETI MWD	13.80	1.0000	1.0000
25420	JHINDSP2	6.90	6	1	-9.2	0.3	0.5	0.0	25420	JHINDSP	6.90	1.0000	1.0493
25420	JHINDSP2	6.90	7	1	-9.2	0.3	0.5	0.0	25420	JHINDSP	6.90	1.0000	1.0493
25420	JHINDSP2	6.90	8	1	-9.2	0.3	0.5	0.0	25420	JHINDSP	6.90	1.0000	1.0493
25420	JHINDSP2	6.90	9	1	-9.2	0.3	0.5	0.0	25420	JHINDSP	6.90	1.0000	1.0493
25424	ESRP P1	6.90	1	1	-4.5	0.1	0.2	0.0	25424	ESRP P1	6.90	1.0000	1.0659
25424	ESRP P1	6.90	2	1	-4.5	0.1	0.2	0.0	25424	ESRP P1	6.90	1.0000	1.0659
25424	ESRP P1	6.90	3	1	-4.5	0.1	0.2	0.0	25424	ESRP P1	6.90	1.0000	1.0659
25424	ESRP P1	6.90	4	1	-4.5	0.1	0.2	0.0	25424	ESRP P1	6.90	1.0000	1.0659
25425	ESRP P2	6.90	5	0	0.0	0.1	0.2	0.0	25425	ESRP P2	6.90	1.0000	1.0668
25425	ESRP P2	6.90	6	0	0.0	0.1	0.2	0.0	25425	ESRP P2	6.90	1.0000	1.0668
25425	ESRP P2	6.90	7	0	0.0	0.1	0.2	0.0	25425	ESRP P2	6.90	1.0000	1.0668
25425	ESRP P2	6.90	8	0	0.0	0.1	0.2	0.0	25425	ESRP P2	6.90	1.0000	1.0668
25426	ESRP P3	6.90	9	0	0.0	0.1	0.2	0.0	25426	ESRP P3	6.90	1.0000	1.0668
25426	ESRP P3	6.90	10	0	0.0	0.1	0.2	0.0	25426	ESRP P3	6.90	1.0000	1.0668
25426	ESRP P3	6.90	11	0	0.0	0.1	0.2	0.0	25426	ESRP P3	6.90	1.0000	1.0668
25426	ESRP P3	6.90	12	0	0.0	0.1	0.2	0.0	25426	ESRP P3	6.90	1.0000	1.0668

2010 Light Spring - Post Vernon 914 MW
CASE NAME: Vpp10lspPost914.sa

BUS-NO	NAME1	KV1	ID	ST	PGEN	QGEN	QMX	QMN	IREG	NAME2	KV2	VSCHED	V-ACT
25614	OSO A P	13.20	1	1	-11.9	0.5	1.0	0.0	25614	OSO A	13.20	1.0000	1.0235
25614	OSO A P	13.20	2	0	0.0	0.5	1.0	0.0	25614	OSO A	13.20	1.0000	1.0235
25614	OSO A P	13.20	3	0	0.0	0.0	1.0	0.0	25614	OSO A	13.20	1.0000	1.0235
25614	OSO A P	13.20	4	0	0.0	-1.3	1.0	0.0	25614	OSO A	13.20	1.0000	1.0235
25615	OSO B P	13.20	5	0	0.0	0.5	1.0	0.0	25615	OSO B	13.20	1.0000	1.0226
25615	OSO B P	13.20	6	0	0.0	0.5	1.0	0.0	25615	OSO B	13.20	1.0000	1.0226
25615	OSO B P	13.20	7	0	0.0	0.5	1.0	0.0	25615	OSO B	13.20	1.0000	1.0226
25615	OSO B P	13.20	8	0	0.0	0.5	1.0	0.0	25615	OSO B	13.20	1.0000	1.0226
24457	ARBWIND	66.00	1	0	0.0	-8.9	-8.9	-8.9	24457	ARBWIND	66.00	1.0100	1.0736
24458	ENCANWND	66.00	1	0	0.0	-17.6	-17.6	-17.6	24458	ENCANWN	66.00	1.0100	1.0758
24459	FLOWIND	66.00	1	0	0.0	-14.2	-14.2	-14.2	24459	FLOWIND	66.00	1.0100	1.0741
24460	DUTCHWND	66.00	1	0	0.0	-6.5	-6.5	-6.5	24460	DUTCHWN	66.00	1.0100	1.0723
24461	S.OAKWND	66.00	1	0	0.0	-10.1	-10.1	-10.1	24461	S.OAKWN	66.00	1.0100	1.0702
24462	NORTHWND	66.00	1	0	0.0	-7.5	-7.5	-7.5	24462	NORTHWN	66.00	1.0100	1.0704
24463	ZONDWIND	66.00	1	0	0.0	-11.0	-11.0	-11.0	24463	ZONDWIN	66.00	1.0100	1.0704
24408	BREEZE	66.00	1	0	0.0	-4.6	-4.6	-4.6	24408	BREEZE	66.00	1.0100	1.0705
24436	GOLDTOWN	66.00	1	0	0.0	-3.8	-3.8	-3.8	24436	GOLDTOW	66.00	1.0100	1.0623
24437	KERNRVR	66.00	1	1	14.9	0.0	0.0	0.0	24437	KERNRVR	66.00	1.0100	1.0773
24464	MIDWIND	66.00	1	0	0.0	-5.0	-5.0	-5.0	24464	MIDWIND	66.00	1.0100	1.0687
24465	MORWIND	66.00	1	0	0.0	-32.0	-32.0	-32.0	24465	MORWIND	66.00	1.0100	1.0660
25632	TERAWND	115.00	1	1	13.5	-11.3	-11.3	-11.3	25632	TERAWND	115.00	1.0000	1.0054
25633	CAPWIND	115.00	1	1	12.0	-10.0	-10.0	-10.0	25633	CAPWIND	115.00	1.0000	1.1125
25634	BUCKWND	115.00	1	1	12.5	-6.5	-6.5	-6.5	25634	BUCKWND	115.00	1.0000	1.0025
25635	ALTWIND	115.00	1	1	30.1	-25.0	-25.0	-25.0	25635	ALTWIND	115.00	1.0000	0.9979
25636	RENWIND	115.00	1	1	7.6	-6.0	-6.0	-6.0	25636	RENWIND	115.00	1.0000	1.0051
25637	TRANWND	115.00	1	1	36.1	-11.5	-11.5	-11.5	25637	TRANWND	115.00	1.0000	1.0014
25639	SEAWIND	115.00	1	1	16.2	-13.5	-13.5	-13.5	25639	SEAWIND	115.00	1.0000	0.9900
25640	PANAERO	115.00	1	1	18.0	-13.5	-13.5	-13.5	25640	PANAERO	115.00	1.0000	0.9899
25645	VENWIND	115.00	1	1	36.4	-5.7	-5.7	-5.7	25645	VENWIND	115.00	1.0000	1.0068
25646	SANWIND	115.00	1	1	16.8	-13.5	-13.5	-13.5	25646	SANWIND	115.00	1.0000	0.9959
24783	RUSH	2.30	1	1	14.9	1.8	5.0	-2.5	24783	RUSH	2.30	1.0000	1.0000
24784	POOLUWD	6.90	1	1	12.9	2.9	6.5	-3.0	24784	POOLUWD	6.90	1.0000	1.0000
24732	KERRGEN	12.50	1	1	3.0	4.8	27.0	-14.0	24732	KERRGEN	12.50	1.0000	1.0000
24733	KERRMGEE	13.80	1	1	54.5	7.0	7.0	-3.0	24733	KERRMGE	13.80	1.0000	0.9830
24826	INDIGO	115.00	1	0	0.0	-6.0	-6.0	-6.0	24826	INDIGO	115.00	1.0000	1.0043
25651	WARNE1	13.80	1	1	37.7	5.9	12.2	-12.3	25651	WARNE1	13.80	1.0000	1.0000
25652	WARNE2	13.80	1	1	37.7	5.9	12.2	-12.3	25652	WARNE2	13.80	1.0000	1.0000
25653	ALAMO SC	13.80	1	1	4.0	-2.8	6.0	-6.0	25653	ALAMO S	13.80	1.0000	1.0000
24133	SANTIAGO	66.00	1	0	0.0	-3.4	8.5	-4.3	24133	SANTIAG	66.00	1.0450	1.0283
24127	S.CLARA	66.00	1	0	0.0	-3.4	24.5	-12.3	24127	S.CLARA	66.00	1.0080	1.0112
28190	WINTECX2	13.80	1	1	36.4	-0.2	28.0	-28.0	28190	WINTECX	13.80	1.0000	1.0000
28191	WINTECX1	13.80	1	1	36.4	-0.2	28.0	-28.0	28191	WINTECX	13.80	1.0000	1.0000
28180	WDT123	13.80	1	1	36.4	-0.2	28.0	-28.0	28180	WDT123	13.80	1.0000	1.0000
24062	HARBOR13	13.80	1	1	89.2	-9.7	40.0	-20.0	24062	HARBOR1	13.80	1.0000	1.0000
25510	HARBORG4	4.16	LP	1	9.9	-2.0	7.0	-2.0	24062	HARBOR1	13.80	1.0000	1.0000
24062	HARBOR13	13.80	HP	1	9.9	-1.1	7.0	-2.0	24062	HARBOR1	13.80	1.0000	1.0000
24815	GARNET	115.00	EQ	0	101.4	-50.7	-50.7	-50.7	24815	GARNET	115.00	1.0000	1.0025
28020	WDT123	115.00	1	1	22.9	-15.0	-15.0	-15.0	28020	WDT123	115.00	1.0000	1.0025
28060	SEAWEST	115.00	1	1	26.7	-14.8	-14.8	-14.8	28060	SEAWEST	115.00	1.0000	0.9979
28060	SEAWEST	115.00	2	1	27.1	-15.0	-15.0	-15.0	28060	SEAWEST	115.00	1.0000	0.9979
28061	WDT092	33.00	1	1	39.7	-22.0	-22.0	-22.0	28061	WDT092	33.00	1.0000	0.9772
28260	ALTAMSA4	115.00	1	1	24.1	-13.3	-13.3	-13.3	28260	ALTAMSA	115.00	1.0000	0.9900
28280	WDT053	33.00	1	1	25.8	-14.3	-14.3	-14.3	28280	WDT053	33.00	1.0000	0.9644
28000	TOT005ST	20.00	1	0	200.0	-12.3	160.0	-90.0	24350	TOT005	230.00	1.0000	1.0476
28001	TOT005CT	15.00	1	0	130.0	-12.3	80.0	-60.0	24350	TOT005	230.00	1.0000	1.0476
28002	TOT005CT	15.00	1	0	130.0	-12.3	80.0	-60.0	24350	TOT005	230.00	1.0000	1.0476
28003	TOT005CT	15.00	1	0	130.0	-12.3	80.0	-60.0	24350	TOT005	230.00	1.0000	1.0476
24718	ALTA31GT	13.80	31	0	60.0	2.1	41.0	-30.0	24718	ALTA31G	13.80	1.0000	1.0833
24719	ALTA 3ST	13.80	3	0	120.0	-1.2	58.0	-41.0	24719	ALTA 3S	13.80	1.0000	1.0833
24720	ALTA41GT	13.80	41	0	0.0	1.2	41.0	-30.0	24720	ALTA41G	13.80	1.0000	1.0833

2010 Light Spring - Post Vernon 914 MW
CASE NAME: Vpp10lspPost914.sa

BUS-NO	NAME1	KV1	ID	ST	PGEN	QGEN	QMX	QMN	IREG	NAME2	KV2	VSCHED	V-ACT
24721	ALTA 4ST	13.80	4	0	0.0	-7.9	58.0	-41.0	24721	ALTA 4S	13.80	1.0000	1.0833
24734	ALTA32GT	13.80	32	0	80.0	5.1	41.0	-30.0	24734	ALTA32G	13.80	1.0000	1.0833
24735	ALTA42GT	13.80	42	0	0.0	1.2	41.0	-30.0	24735	ALTA42G	13.80	1.0000	1.0833
24921	TOT109-C	18.00	1	0	80.0	33.5	115.0	-61.0	24921	TOT109-	18.00	1.0300	1.0306
24922	TOT109-C	18.00	1	0	80.0	33.5	115.0	-61.0	24922	TOT109-	18.00	1.0300	1.0306
24923	TOT109-S	18.00	1	0	80.0	38.8	200.0	-100.0	24923	TOT109-	18.00	1.0300	1.0306
24924	TOT109-C	18.00	1	0	80.0	33.3	115.0	-61.0	24924	TOT109-	18.00	1.0300	1.0306
24925	TOT109-C	18.00	1	0	80.0	33.3	115.0	-61.0	24925	TOT109-	18.00	1.0300	1.0306
24926	TOT109-S	18.00	1	0	80.0	39.4	200.0	-100.0	24926	TOT109-	18.00	1.0300	1.0306
24999	DEVRSVC1	500.00	1	1	0.0	0.1	0.1	0.0	24999	DEVRSVC	500.00	1.0222	1.1134
24997	VALYSVC1	500.00	1	1	0.0	0.1	0.1	0.0	24997	VALYSVC	500.00	1.0209	1.1042
24927	AES1	13.80	1	1	107.3	-15.0	25.0	-15.0	24927	AES1	13.80	1.0000	1.0345
24928	AES2	13.80	2	1	107.3	-15.0	25.0	-15.0	24928	AES2	13.80	1.0000	1.0345
24929	AES3	13.80	3	1	107.3	-15.0	25.0	-15.0	24929	AES3	13.80	1.0000	1.0345
24999	DEVRSVC1	500.00	2	1	0.0	0.1	0.1	0.0	24999	DEVRSVC	500.00	1.0222	1.1134
24229	VALLEY-S	115.00	1	0	0.0	0.1	0.1	0.0	24229	VALLEY-	115.00	0.9830	1.0384
25991	VALYSVC2	115.00	1	1	0.0	0.0	100.0	0.0	24229	VALLEY-	115.00	0.9830	1.0384
25990	VALYSVC1	115.00	1	1	0.0	0.1	0.1	0.0	24160	VALLEYS	115.00	0.9830	1.0687
25711	TOT1201	0.57	1	0	25.5	1.6	8.4	-12.4	25711	TOT1201	0.57	1.0000	1.0064
25712	TOT1202	0.57	1	0	24.0	1.3	7.9	-11.6	25712	TOT1202	0.57	1.0000	1.0064
25713	TOT1203	0.57	1	0	25.5	1.1	8.4	-12.4	25713	TOT1203	0.57	1.0000	1.0064
25714	TOT1204	0.57	1	0	25.5	0.9	8.4	-12.4	25714	TOT1204	0.57	1.0000	1.0064
24234	RECTRSVC	230.00	1	1	0.0	0.1	0.1	0.0	24234	RECTRSV	230.00	1.0000	1.0093
28041	TOT139C1	19.50	1	1	11.1	-19.0	280.0	-200.0	28041	TOT139C	19.50	1.0460	1.0460
28042	TOT139C2	19.50	2	1	88.7	-20.1	280.0	-200.0	28042	TOT139C	19.50	1.0460	1.0460
28104	TOT032S1	22.00	S1	1	79.4	18.5	195.0	-120.0	28104	TOT032S	22.00	1.0200	1.0200
28103	TOT032G3	18.00	G3	0	166.7	90.0	90.0	-70.0	28103	TOT032G	18.00	1.0200	1.0200
28102	TOT032G2	18.00	G2	0	166.7	90.0	90.0	-70.0	28102	TOT032G	18.00	1.0200	1.0200
28101	TOT032G1	18.00	G1	0	166.7	90.0	90.0	-70.0	28101	TOT032G	18.00	1.0200	1.0200
24998	RERC	66.00	1	1	28.9	-0.8	15.0	-0.8	24998	RERC	66.00	0.9804	1.0262
24998	RERC	66.00	2	1	28.9	-0.8	15.0	-0.8	24998	RERC	66.00	0.9804	1.0262
24252	TOT12810	16.50	1	0	185.0	46.6	115.0	-95.0	24252	TOT1281	16.50	1.0000	1.0488
24253	TOT12810	16.50	1	0	185.0	46.4	115.0	-95.0	24253	TOT1281	16.50	1.0000	1.0488
24254	TOT12810	21.00	1	0	336.0	85.7	205.0	-170.0	24254	TOT1281	21.00	1.0000	1.0488
24257	TOT12820	16.50	1	0	185.0	46.6	115.0	-95.0	24257	TOT1282	16.50	1.0000	1.0488
24258	TOT12820	16.50	1	0	185.0	46.4	115.0	-95.0	24258	TOT1282	16.50	1.0000	1.0488
24259	TOT12820	21.00	1	0	336.0	85.7	205.0	-170.0	24259	TOT1282	21.00	1.0000	1.0488
28169	WDT169	13.80	1	0	49.9	2.2	16.4	-24.2	28169	WDT169	13.80	1.0000	1.0272
24902	VSTA	66.00	3	1	48.6	-12.5	15.0	-12.5	24902	VSTA	66.00	1.0230	1.0272
28201	TOT135G1	13.80	1	1	99.2	16.4	81.7	-48.0	28201	TOT135G	13.80	1.0000	1.0000
28202	TOT135G2	13.80	2	1	99.2	16.4	81.7	-48.0	28202	TOT135G	13.80	1.0000	1.0000
28203	TOT135G3	13.80	3	1	99.2	16.4	81.7	-48.0	28203	TOT135G	13.80	1.0000	1.0000
28204	TOT135G4	13.80	4	1	99.2	16.4	81.7	-48.0	28204	TOT135G	13.80	1.0000	1.0000
28205	TOT135G5	13.80	5	1	99.2	16.4	81.7	-48.0	28205	TOT135G	13.80	1.0000	1.0000
28888	WDT188	13.80	1	0	49.9	-14.4	16.4	-24.2	28888	WDT188	13.80	1.0000	1.0385
28057	TOT139G1	15.00	1	0	184.0	-0.1	138.0	-92.0	28056	TOT139D	230.00	0.9675	1.0324
28058	TOT139G2	15.00	2	0	184.0	-92.0	138.0	-92.0	28056	TOT139D	230.00	0.9675	1.0324
28059	TOT139G3	15.00	3	0	184.0	-92.0	138.0	-92.0	28056	TOT139D	230.00	0.9675	1.0324
28220	TOT138G2	15.00	2	1	200.3	49.9	103.0	-51.0	28220	TOT138G	15.00	1.0300	1.0300
28219	TOT138G1	15.00	1	1	200.3	49.9	103.0	-51.0	28219	TOT138G	15.00	1.0300	1.0300
25500	P500_G5	18.00	5	1	173.5	20.8	60.0	-60.0	25500	P500_G5	18.00	1.0300	1.0300
25501	P500_G6	18.00	6	1	173.5	20.8	60.0	-60.0	25501	P500_G6	18.00	1.0300	1.0300
25502	P500_S7	18.00	7	1	277.6	32.1	160.0	-80.0	25502	P500_S7	18.00	1.0300	1.0300
24157	WALNUT	66.00	1	0	49.9	-12.3	16.4	-24.2	24157	WALNUT	66.00	1.0380	1.0304
99112	ELSNORE2	16.00	1	1	249.1	-121.7	122.0	-122.0	99112	ELSNORE	16.00	1.0000	1.0000
99110	ELSNORE1	16.00	1	1	249.1	-121.7	122.0	-122.0	99110	ELSNORE	16.00	1.0000	1.0000
24075	LAGUBELL	66.00	WC	1	49.5	16.4	16.4	-24.2	24075	LAGUBEL	66.00	1.0150	1.0049
28213	WDT182G1	13.80	1	1	100.6	-7.4	80.0	-50.0	28213	WDT182G	13.80	1.0000	1.0000
28214	WDT182G2	13.80	1	1	100.6	-7.4	80.0	-50.0	28214	WDT182G	13.80	1.0000	1.0000
28215	WDT182G3	13.80	1	1	100.6	-7.4	80.0	-50.0	28215	WDT182G	13.80	1.0000	1.0000

2010 Light Spring - Post Vernon 914 MW
CASE NAME: Vpp10lspPost914.sa

BUS-NO	NAME1	KV1	ID	ST	PGEN	QGEN	QMX	QMN	IREG	NAME2	KV2	VSCHED	V-ACT
28216	WDT182G4	13.80	1	1	100.6	-7.4	80.0	-50.0	28216	WDT182G	13.80	1.0000	1.0000
28217	WDT182G5	13.80	1	1	100.6	-7.4	80.0	-50.0	28217	WDT182G	13.80	1.0000	1.0000
24401	ANTELOPE	230.00	1	1	1260.1	-424.0	-424.0	-424.0	24401	ANTELOP	230.00	1.0200	0.9987
28296	TOT166C1	16.50	1	1	227.5	75.4	75.4	-111.2	28296	TOT166C	16.50	1.0364	1.0063
28297	TOT166C2	16.50	2	1	227.5	75.4	75.4	-111.2	28297	TOT166C	16.50	1.0364	1.0063
28298	TOT166S	18.00	1	1	297.1	98.5	98.5	-145.2	28298	TOT166S	18.00	1.0364	1.0063
29700	TEH_GENS	230.00	1	1	2945.4	-670.0	1500.0	-1500.0	29700	TEH_GEN	230.00	1.0000	1.0000