CH2M HILL
2485 Natomas Park Drive
Suite 600
Sacramento, CA
Tel 916-920-0300
Fax 916-920-8463

CH2MHILL

July 19, 2007
338307

DOCKET
06-AFC-4
DATE JUL 19 2007
RECD. JUL 19 2007

Dr. James Reede
Energy Facility Siting Project Manager
California Energy Commission
1516 Ninth Street, MS-15
Sacramento, CA 95814-5512

RE: Data Response, Set 3B
Vernon Power Project (06-AFC-4)

On behalf of the City of Vernon, please find attached 12 copies and one original of the Data Responses, Set 3B, in response to Staff's Data Request Number 71c dated April 24, 2007. We are also filing copies of this Data Response electronically.

Please call me if you have any questions.

Sincerely,

CH2M HILL

John L. Carrier

John L. Carrier, J.D.
Program Manager

c: Project File
Proof of Service List

VERNON POWER PLANT
(06-AFC-4)

DATA RESPONSE, SET 3B

(Responses to Data Request: TSE 71c)

Submitted by

City of Vernon

July 19, 2007

CH2MHILL

2485 Natomas Park Drive, Suite 600
Sacramento, California 95833-2937

VERNON POWER PLANT
(06-AFC-4)
DATA RESPONSES, SET 3B

Technical Area: Transmission System Engineering
Author: Ajoy Guha, P.E.; Mark Hesters

BACKGROUND

After reviewing the March 5, 2007 Data responses-Set 2A with regard to TSE Data Request No. 59, staff observes that the City's 66 kV system is connected to the Laguna Bell 66 kV bus. Therefore, the VPP could contribute additional fault currents in the 66 kV network. Moreover, load flows in the 66 kV system may be affected for different generation schedules from the City-owned plants including the MGS or any other generating units being turned on or off. Please note that according to the 2002 SIS performed by Navigant, the interconnection of the MGS caused an increase in fault level in the City's system. It warranted a mitigation plan by the City for replacement or upgrade of forty 66 kV circuit breakers in their 66 kV system.

The mitigation of identified VPP-related overloads on the City's 66 kV system could require the construction or upgrade of downstream facilities. A study of the City's 66 kV system is required to determine whether or not downstream mitigation is required and to identify the whole of the proposed project.

DATA REQUEST

71. c. Provide a Short Circuit Duty study report for the City's 66 kV system. For any identified reliability criteria violations in the City's 66 kV system, identify and describe mitigation measures with their expected on-line date.

    Response: In Data Response, Set 3A the City said it would prepare a short circuit analysis of its system and provide it to the CEC. That short circuit study is provided as Attachment TSE-71C.

ATTACHMENT TSE-71C

Short Circuit Duty Study

The impact of adding VPP was studied by using power system analysis software to simulate the Southern California Edison (SCE) system under a pre-VPP scenario and a post-VPP scenario and the impact of each scenario on the existing 66kV system circuit breakers. The pre-VPP and post-VPP short circuit values were provided by SCE. The results are summarized in the attached Table TSE71C-1. All of the 66kV circuit breakers in the City of Vernon system are rated 72.5kV, 40kA interrupting. The pre- and post-VPP simulations indicate that the existing 66kV system circuit breakers have adequate interrupting capacities and will not require any remedial action.

The short circuit duties at Laguna Bell substation are shown in document VPP-SK3. The pre-VPP City of Vernon single-line/impedance diagram is shown in document VPP PRE IMP-SK2. The City of Vernon Post-VPP single-line/impedance diagram is shown in document VPP POST IMP-SK1.

TABLE TSE71C-1
CITY of VERNON SHORT CIRCUIT DUTY SUMMARY

LOCATION	CB RATED DUTY	PRE-VPP AVAILABLE SS CURRENT(KA)	POST-VPP AVAILABLE SS CURRENT(KA)
LEONIS	40KA	26.337	27.628
VERNON	40KA	25.261	26.371
YBARRA	40KA	21.201	21.885
OWILL	40KA	24.663	25.734
BEEJAY	40KA	15.412	15.828
KINETIC	40KA	16.353	16.823
CONTAINER	40KA	15.742	16.169
MALKENHORST	40KA	21.723	22.623
MATHESON TRIGAS	40KA	19.898	20.724

Phase 2 - Addition of 304 MWs of Generation (610+304=914MWs total)

Option 1 - LA River Option

BUS	Voltage (kV)	Pre-Project SCD		Post-Project SCD		Delta SCD	
		Amps (kA)	MVA	Amps (kA)	MVA	Amps (kA)	MVA
Laguna Bell DE	66	24.61	2813.3	24.77	2831.6	0.16	18.3

Option 2 - Randolph St. Option

BUS	Voltage (kV)	Pre-Project SCD		Post-Project SCD		Delta SCD	
		Amps (kA)	MVA	Amps (kA)	MVA	Amps (kA)	MVA
Laguna Bell DE	66	24.52	2803.0	24.88	2844.2	0.36	41.2

Phase 1 - Addition of 610 MWs of Generation

Option 1 - LA River Option

BUS	Voltage (kV)	Pre-Project SCD		Post-Project SCD		Delta SCD	
		Amps (kA)	MVA	Amps (kA)	MVA	Amps (kA)	MVA
Laguna Bell DE	66	23.97	2740.1	24.6	2812.2	0.63	72.0

Option 2 - Randolph St. Option

BUS	Voltage (kV)	Pre-Project SCD		Post-Project SCD		Delta SCD	
		Amps (kA)	MVA	Amps (kA)	MVA	Amps (kA)	MVA
Laguna Bell DE	66	23.97	2740.1	24.62	2814.4	0.65	74.3

REFERENCE DRAWING
NO. 0
REVISION 0
DATE 07/19/07
APPV'D DS
CHK DS
BY
LIGHT & POWER DEPARTMENT
LOCATION SYSTEM
SCE PRE AND POST VPP FAULT DUTIES
VPP - SK3

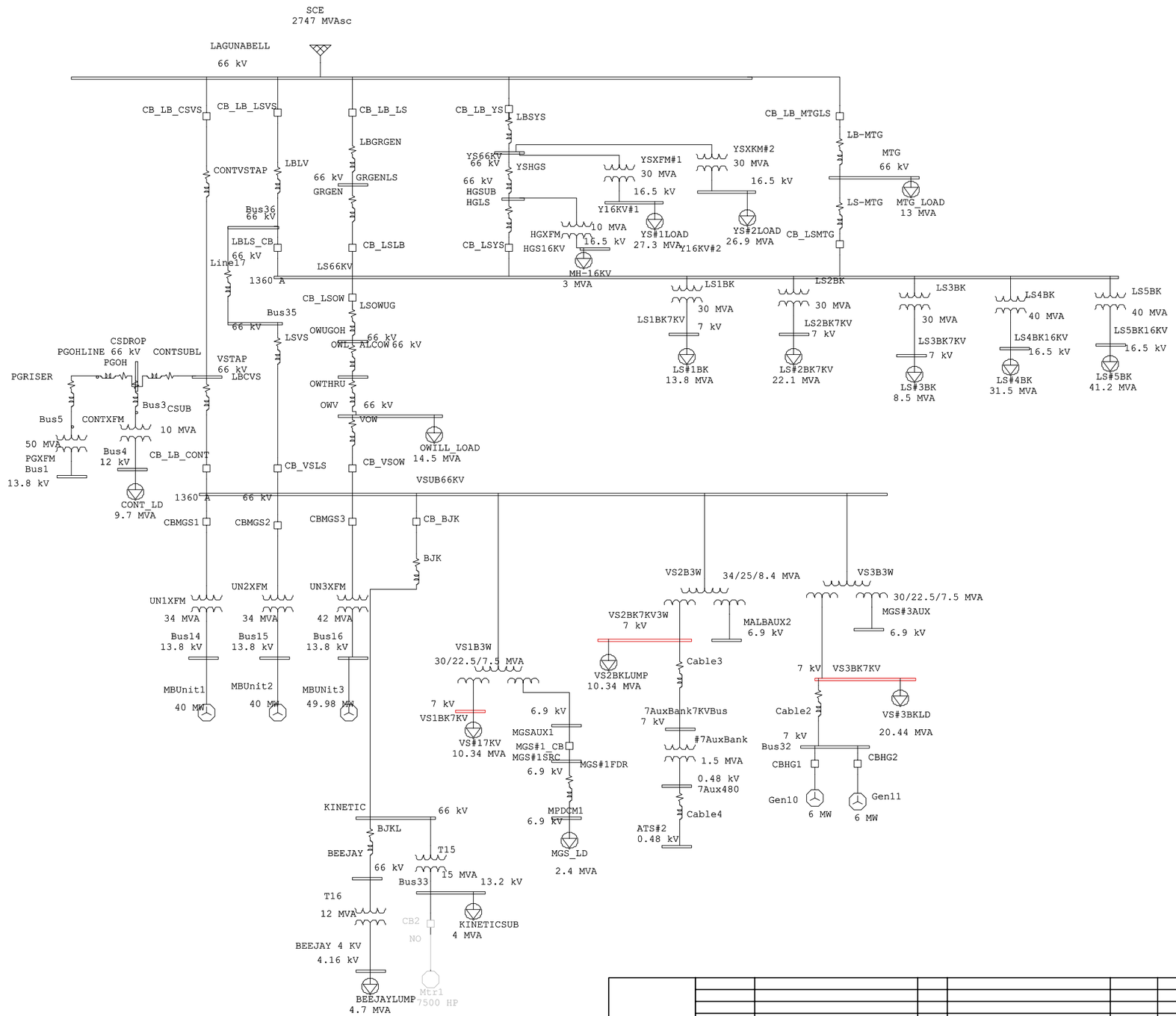

								LIGHT & POWER DEPARTMENT
								LOCATION: 66 KV SYSTEM
								PRE VPP IMPEDANCE DIAGRAM
		0	0	07/18/07	OS	OS	ZOOM	
	REFERENCE DRAWING	NO.	REVISION	DATE	APPV'D	CHK	BY	VPP-PRE IMP - SK 2

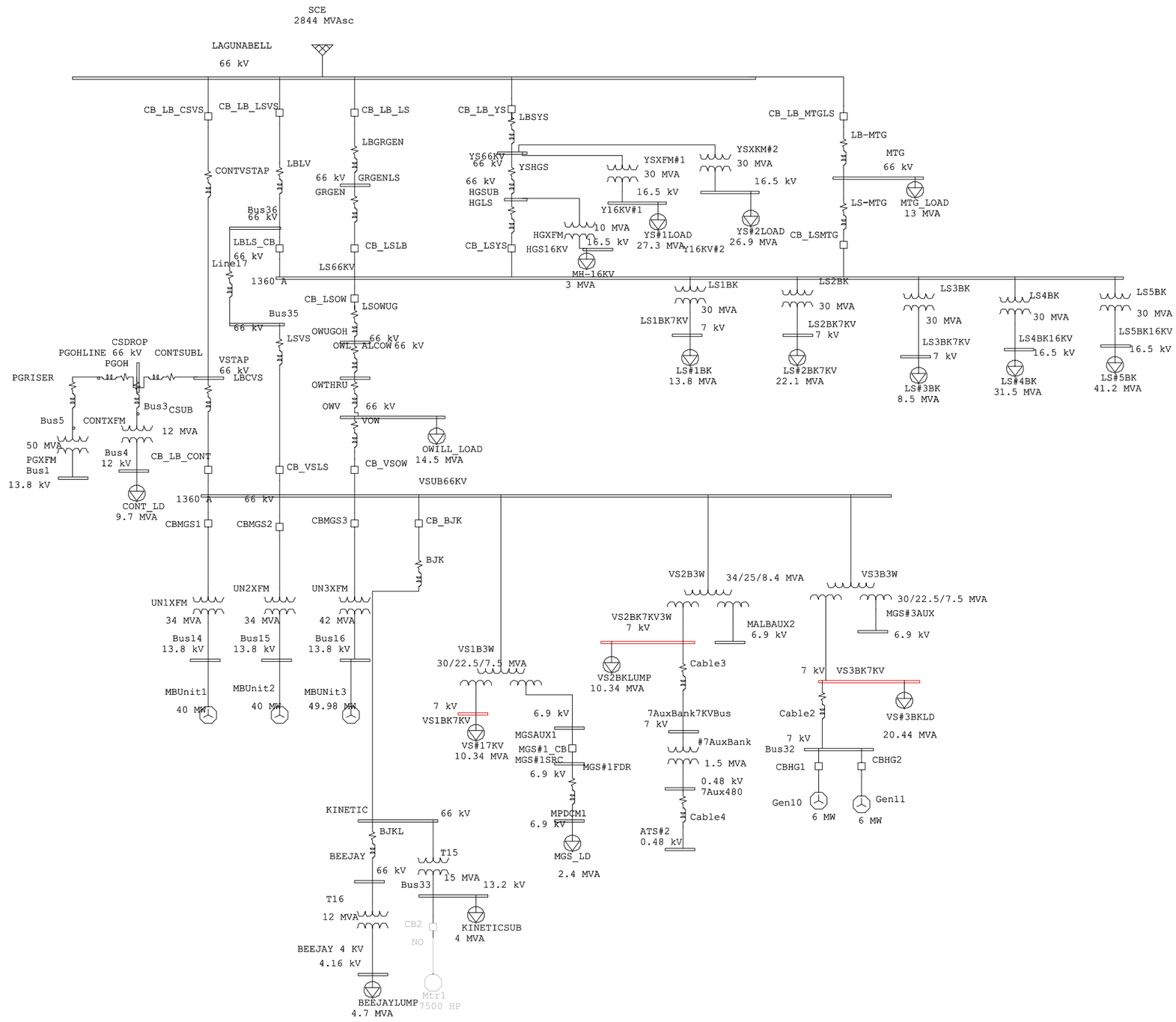

								LIGHT & POWER DEPARTMENT
								LOCATION: 66 KV SYSTEM
								POST VPP IMPEDANCE DIAGRAM
		0	0	07/18/07	OS	OS	CJC	
	REFERENCE DRAWING	NO.	REVISION	DATE	APPV'D	CHK	BY	VPP-POST IMP - SK 1

BEFORE THE ENERGY RESOURCES CONSERVATION AND DEVELOPMENT COMMISSION OF THE STATE OF CALIFORNIA

APPLICATION FOR CERTIFICATION FOR THE VERNON POWER PLANT PROJECT BY THE CITY OF VERNON	**DOCKET NO. 06-AFC-4** **PROOF OF SERVICE LIST** **(REVISED 5/1/2007)**

INSTRUCTIONS: All parties shall (1) file a printed, original signed document plus 12 copies OR file one original signed document and e-mail the document to the Docket address below, AND (2) all parties shall also send a printed OR electronic copy of the document, plus a proof of service declaration, to each of the entities and individuals on the proof of service list:

CALIFORNIA ENERGY COMMISSION
Attn: DOCKET NO. 06-AFC-4
1516 Ninth Street, MS-4
Sacramento, CA 95814-5512
docket@energy.state.ca.us

APPLICANT
Donal O'Callaghan
Director of Light & Power
City of Vernon
4305 So. Santa Fe Avenue
Vernon, CA 90058
docallaghan@ci.vernon.ca.us
rtoering@ci.vernon.ca.us
e.fresch@sbcglobal.net

John Carrier, CH2M Hill
Environmental Consultant
2485 Natomas Park Dr., #600
Sacramento, CA 95833-2937
john.carrier@ch2m.com

COUNSEL FOR APPLICANT
Jeff A. Harrison, City Attorney
City of Vernon
4305 So. Santa Fe Avenue
Vernon, CA 90058
jharrison@ci.vernon.ca.us
jharrison@karnskarabian.com

Michael Carroll, Counsel for Vernon
Latham & Watkins
650 Town Center Drive, 20th Floor
Costa Mesa, California 92626-1925
michael.carroll@lw.com

John Karns, Counsel for Vernon
Karns & Karabian
900 Wilshire Boulevard, Suite 530
Los Angeles, California 90017
jkarns@karnskarabian.com

INTERESTED AGENCIES
City of Huntington Park
Att: Albert Fontanez, Asst Planner
6550 Miles Avenue
Huntington Park, CA 90255
afontanez@huntingtonpark.org

City of Maywood
Att: Felipe Aguirre & Edward Ahrens
4319 E. Slauson Ave
Maywood Ca 90270
faguirre@cityofmaywood.com
eahrens@cityofmaywood.com

Electricity Oversight Board
Att: Eric Saltmarsh
770 L Street, Suite 1250
Sacramento, CA 95814
esaltmarsh@eob.ca.gov

Yolanda Garza, Unit Chief
Permitting and Corrective Action Branch
Department of Toxic Substances Control
1011 N. Grandview Street
Glendale, CA 91201
ygarza@dtsc.ca.gov

Christine Bucklin, P.G.
Senior Engineering Geologist
Department of Toxic Substances Control
1011 N. Grandview Street
Glendale, CA 91201
cbucklin@dtsc.ca.gov

John Yee & Chandrashekhar Bhatt
South Coast Air Quality Mgmt. District
21865 E. Copley Drive
Diamond Bar, CA 91765-4182
jyee@aqmd.gov
cbhatt@aqmd.gov

City of Los Angeles
Jennifer Pinkerton
Environmental Affairs Department
200 N. Spring St., Rm. 2005, MS 177
Los Angeles, CA 90012
Jennifer.Pinkerton@lacity.org

INTERVENORS

California Unions for Reliable Energy
Marc D. Joseph & Gloria D. Smith
Adams Broadwell Joseph & Cardozo
601 Gateway Blvd., Suite 1000
South San Francisco, California 94080
gsmith@adamsbroadwell.com
mdjoseph@adamsbroadwell.com

*** Ian Forrest, Esq., Counsel for Rite-Way**
Jeffer, Mangels, Butler & Marmaro LLP
1900 Ave of the Stars, 7th Fl.
Los Angeles, CA 90067-4308
lforrest@jmbm.com

*** Irwin Miller, President**
Rite-Way Meat Packers, Inc.
5151 Alcoa Avenue
Vernon, California 90058
lrwin@rose-shore.com

Communities for a Better Environment
Bahram Fazeli
5610 Pacific Boulevard, Suite 203
Huntington Park CA 90255
bfazeli@cbecal.org

Communities for a Better Environment
Shana Lazerow & Philip Huang
1440 Broadway, Suite 701
Oakland, CA 94612
phuang@cbecal.org

ENERGY COMMISSION

Jackalyne Pfannenstiel, Chair
Presiding Committee Member
jpfannen@energy.state.ca.us
cgraber@energy.state.ca.us

James D. Boyd, Commissioner
Associate Committee Member
jboyd@energy.state.ca.us

Susan Gefter
Hearing Officer
sgefter@energy.state.ca.us

James W. Reede, Jr., Ed.D
Siting Project Manager
jreede@energy.state.ca.us

Kenneth Celli
Staff Attorney
kcelli@energy.state.ca.us

Public Adviser
pao@energy.state.ca.us

DECLARATION OF SERVICE

I, Jeannette Harris, declare that on July 19, 2007, I deposited the required copies of the attached Data Responses, Set 3B, in the United States mail at Sacramento, California with first-class postage thereon fully prepaid and addressed to those identified on the Proof of Service list above. I declare under penalty of perjury that the foregoing is true and correct.

OR

Transmission via electronic mail was consistent with the requirements of California Code of Regulations, title 20, sections 1209, 1209.5, and 1210. All electronic copies were sent to all those identified on the Proof of Service list above.

I declare under penalty of perjury that the foregoing is true and correct.

Jeannette Harris

Jeannette Harris/CH2M HILL