CH2M HILL
2485 Natomas Park Drive
Suite 600
Sacramento, CA
Tel 916-920-0300
Fax 916-920-8463

DOCKET
06-AFC-4
DATE MAY 24 2007
RECD. MAY 24 2007

May 24, 2007
338307

Dr. James Reede
Energy Facility Siting Project Manager
California Energy Commission
1516 Ninth Street, MS-15
Sacramento, CA 95814-5512

RE: Data Response, Set 3A
Vernon Power Project (06-AFC-4)

On behalf of the City of Vernon, please find attached 12 copies and one original of the Data Responses, Set 3A, in response to Staff's Requests (Nos. 60-74) dated April 24, 2007. We are also filing copies of this Data Response electronically.

Please call me if you have any questions.

Sincerely,

CH2M HILL

John L. Carrier, J.D.
Program Manager

c: Project File
Proof of Service List

VERNON POWER PLANT
(06-AFC-4)

DATA RESPONSE, SET 3A

(Responses to Data Requests: Waste Management, Nos. 60-68 and Transmission System Engineering, Nos. 69-74)

Submitted by

City of Vernon

May 24, 2007

CH2MHILL

2485 Natomas Park Drive, Suite 600
Sacramento, California 95833-2937

VERNON POWER PLANT
(06-AFC-4)
DATA RESPONSES, SET 3A

Technical Area: Waste Management
Author: Ellie Townsend-Hough

BACKGROUND

Staff and the Department of Toxic Substances Control (DTSC) have reviewed the following four documents that make up the Vernon Power Plant (VPP) Phase II Environmental Site Assessment (ESA).

1. Phase II Environmental Site Assessment, Volumes 1 & 2.
2. Stoddard Solvent Impacted Soils Investigation.
3. Polychlorinated Biphenyls (PCB) Notification Plan.
4. Supplemental Phase II Environmental Site Assessment.

The proposed project site has had a manufacturing presence since the 1940s. There will be a large amount of ground disturbance during project construction, and there is a potential for public health impacts during operations and maintenance, when workers will be present at the site. To protect the workers and reduce/eliminate damage to the environment, the project owner needs to verify that no harmful concentrations of any contaminant will occur at the proposed project site.

DTSC had not been contacted in this process by the applicant. Information presented by DTSC Permitting and Corrective Action Branch on April 18, 2007, confirmed that the City of Vernon's Environmental and Public Health Department does not possess the required Certified Unified Participating Agency (CUPA) certification to be eligible to review their own corrective action projects or approve Remedial Action Plans for soil or groundwater contamination as required by DTSC or the Regional Water Quality Control Board (RWQCB). The applicant will need to provide a schedule and workplan for contaminated soil and groundwater remediation activities with oversight by DTSC and the RWQCB.

According to the VPP Phase I and II ESAs there is evidence of:

- three monitoring wells (AOW-6, AOW-8 and AOW-9) on site for which staff cannot find well abandonment documentation: These wells are in an area which appears to have a groundwater contaminant plume;
- polychlorinated biphenyls (PCBs) in soil which could effect workers dermally and may leach to groundwater. It is not clear if concrete and/or soils contaminated with PCBs were appropriately handled and disposed of during the Alcoa Building demolition activities at the site;
- there appear to be areas where additional sampling for PCBs is necessary;
- Stoddard solvent contamination that can leach to groundwater and potentially be inhaled; and
- other Volatile Organic Compounds detected in the soil, soil vapor and groundwater which may be a risk to human health.

Response to Background: As stated in Section 8.13 of the Application for Certification (AFC), the agreement between the City of Vernon and the current owner of the

3200 Fruitland Avenue site, Pechiney, obligates Pechiney to remove all existing buildings and structures and remediate the site prior to transfer of title and physical control of the site to the City. This work is currently underway by Pechiney and its consultant Geomatrix.

The City of Vernon Health and Environmental Control Department (HECD) oversaw the hazardous material activities at the 3200 Fruitland Avenue site in its role as the CUPA, authorized by the California Environmental Protection Agency (Cal-EPA) to manage hazardous materials and hazardous waste regulatory programs in Vernon. Additionally, the HECD has been overseeing remedial activities at the site by the authority of City of Vernon Ordinance No. 961, Hazardous Materials Monitoring Program, which was adopted in 1986, and includes requirements for the HECD to oversee the closure of hazardous materials businesses and assure cleanup of residues.

Using applicable federal and State remediation guidelines and procedures, HECD has overseen the remedial activities at a number of sites with contamination similar to that found at the 3200 Fruitland Avenue site. Both DTSC and the RWQCB are aware of HECD's 20-year history of overseeing certain remedial activities. For every remedial project in the City, HECD initially has the goal of removing all contaminants to non-detect levels. This goal can be revised taking into consideration the degree of environmental threat and site-specific conditions. HECD is provided this clean-up goal latitude due the fact that the water table under Vernon is very deep, and the City of Vernon was established as an industrial/ commercial community in 1905 and permitted land uses continue to be non-residential with few, if any, sensitive receptors. HECD uses the following list of hierarchical determinants to decide if a contaminated site has been sufficiently cleaned up to make a determination that active remedial measures can be closed. Progression down the list to a particular determinant is made only after it is determined that a higher degree of clean-up is no longer practically feasible.

- Clean-up to non-detected levels of contaminants
- Clean-up to background levels of contaminants
- Reduction in contaminant levels to acceptable concentrations per the "Interim Site Assessment and Cleanup Guidebook", promulgated by the California Regional Water Quality Control Board, Los Angeles and Ventura Counties Region 4
- Clean-up to the U.S. EPA, Region 9 Preliminary Remediation Goals (PRGs), in the event a contaminant is not addressed by the interim guidebook, or if the PRG for a contaminant is more stringent
- Risk-based corrective action using risk assessments and fate-and-transport models

In the event that environmental closure cannot be accomplished by any of the determinants above, HECD has, under certain conditions, opted to allow contamination to stay in place at a site without closure. These conditions include: determination that the contamination is stable, posing no immediate threat to the environment or public health; long-term monitoring of the contamination; and placement of a notice describing the contamination on a contaminated property's deed.

Based on existing assessment data for the 3200 Fruitland Avenue site, HECD determined that it would be appropriate to use the "Interim Site Assessment and Cleanup Guidebook" (Guidebook) to establish target clean-up goals. According to the Guidebook, acceptable clean-up goal concentrations at the site would be 500 ppm for the volatile (hydrocarbon chain range C4 to C12) component of Stoddard solvent and 1,000 ppm for the mid-range (hydrocarbon chain range C13 to C22) component of Stoddard solvent. The Stoddard solvent contamination is located beneath concrete building floor slabs, foundations, and asphalt-covered areas in the southern portion of the former Pechiney facility, which has been identified as a lay down area for the proposed Vernon Power Plant (VPP). No excavation activities related to VPP are planned for this area.

The current status of the hazardous materials closure of the Pechiney facility is that above grade assessment, remediation, and demolition have been completed. This work was conducted based on an approved above grade demolition plan that included procedures for permitting, health & safety, security, hazardous materials survey/abatement, air monitoring, and disposal.

The City provides the following responses to Data Requests 60 through 68. The responses to Data Requests 60, 61, 62, 65, 66, 67 and 68 are based primarily on information provided by Geomatrix.

DATA REQUEST

60. Please provide a schedule, workplan, and contacts to comply with DTSC and RWQCB requirements for soil and groundwater remediation.

    Response: A Feasibility Study/Remedial Action Plan (FS/RAP), including a project schedule, is being prepared by Geomatrix to address the remaining below-grade demolition and remediation work. The FS/RAP will be submitted to the City of Vernon Health and Environmental Control (H&EC) and to the Department of Toxic Substances Control (DTSC) case manager supporting the California Energy Commission (CEC). In addition, the FS/RAP will be submitted to the United States Environmental Protection Agency (U.S. EPA) Region 9 Toxic Substances Control Act manager for the proposed remedy for the polychlorinated biphenyl (PCB)-impacted concrete and soil. According to Geomatrix, the FS/RAP focuses on concrete, soil, and soil vapor remediation of chemicals of concern (COCs) that will be protective of human health and the future/continued protection of groundwater beneath the Site. A companion Quality Assurance Project Plan (QAPP), including a Sampling and Analysis Plan, for the below-grade demolition and remediation work is also being prepared. The FS/RAP and QAPP is anticipated to be submitted to the respective agencies by the end of June 2007. The implementation schedule for remediation will be dependant on agency approvals of the FS/RAP and completion of public participation activities. It is anticipated that the below-grade demolition and remediation work will begin in 2007.

61. **Monitoring Wells:** Please document the fate of these wells indicating that proper well abandonment activities and/or adequate protection were provided during demolition activities at the site in compliance with California Department of Water Resources (DWR) Bulletins 74-81 and 74-90. Further, the required RWQCB oversight with regard to the existing groundwater contaminant plume shall be discussed in detail.

Response: The below-grade demolition work (including the removal of concrete slabs and pavement) has not commenced. The three groundwater monitoring wells (AOW-6, AOW-8, and AOW-9) remain onsite (within Parcel 7, as shown on the site map provided as Figure WM-61). As part of Alcoa's closure of its facilities (as the former site owner/operator), groundwater monitoring wells were installed at the site by Alcoa under the oversight of the City of Vernon H&EC. In 2002, LARWQCB requested additional testing of groundwater for fuel-related constituents because two of the wells were located in an area associated with the former Stoddard solvent underground storage tanks. The results of this testing concluded that groundwater was impacted with chlorinated volatile organic compounds (VOCs); trichloroethene (TCE); 1,2-dichloroethane; and chloroform. Based on Alcoa's request for closure of these wells, the RWQCB required that Alcoa conduct additional groundwater testing of the wells in 2005 and 2006. Alcoa conducted additional testing in 2005 and 2006 and has recently submitted the monitoring data to the RWQCB. Based on the monitoring results, the concentration of chlorinated VOCs decreased relative to the concentrations reported between 1990 and 1997. Alcoa, through their local consultant, Environmental Protection and Compliance (EPC), is currently negotiating the closure of these wells with the RWQCB. However, until RWQCB agrees to close these wells, they will remain in-place and be protected during the below-grade demolition and remediation work.

62. **Polychlorinated Biphenyls (PCBs):** Please report on the status of the PCB investigations for the transformer pads, cathouse [sic] area, building 104 and building 106.

Response: The reference to "cathouse" should be "cast house." Geomatrix submitted a Polychlorinated Biphenyls (PCB) Notification Plan (Plan) to the City of Vernon H&EC and the U.S. EPA Region 9 Toxic Substances Control Act manager on September 27, 2006. Pursuant to the Plan, Geomatrix conducted additional concrete sampling and analysis at the Site following the submittal of the Plan, and the last sampling event was completed by Geomatrix in February 2007. Concrete coring and testing data, including data collected by Alcoa during a previous assessment, was used to delineate PCB-impacted areas where concentrations exceeded proposed site-specific risk-based remediation goals. These samples were collected from the locations at the site listed below.

- Twelve concrete samples were collected from the footprint of the former electrical substations and/or transformer pads.

EXPLANATION

- LIMITS OF WORK
- PHASING AREA BOUNDARY
- RAILROAD TRACK (AT GRADE)
- RAILROAD TRACK (BURIED)
- CHAIN LINK FENCE
- GROUNDWATER MONITORING WELL

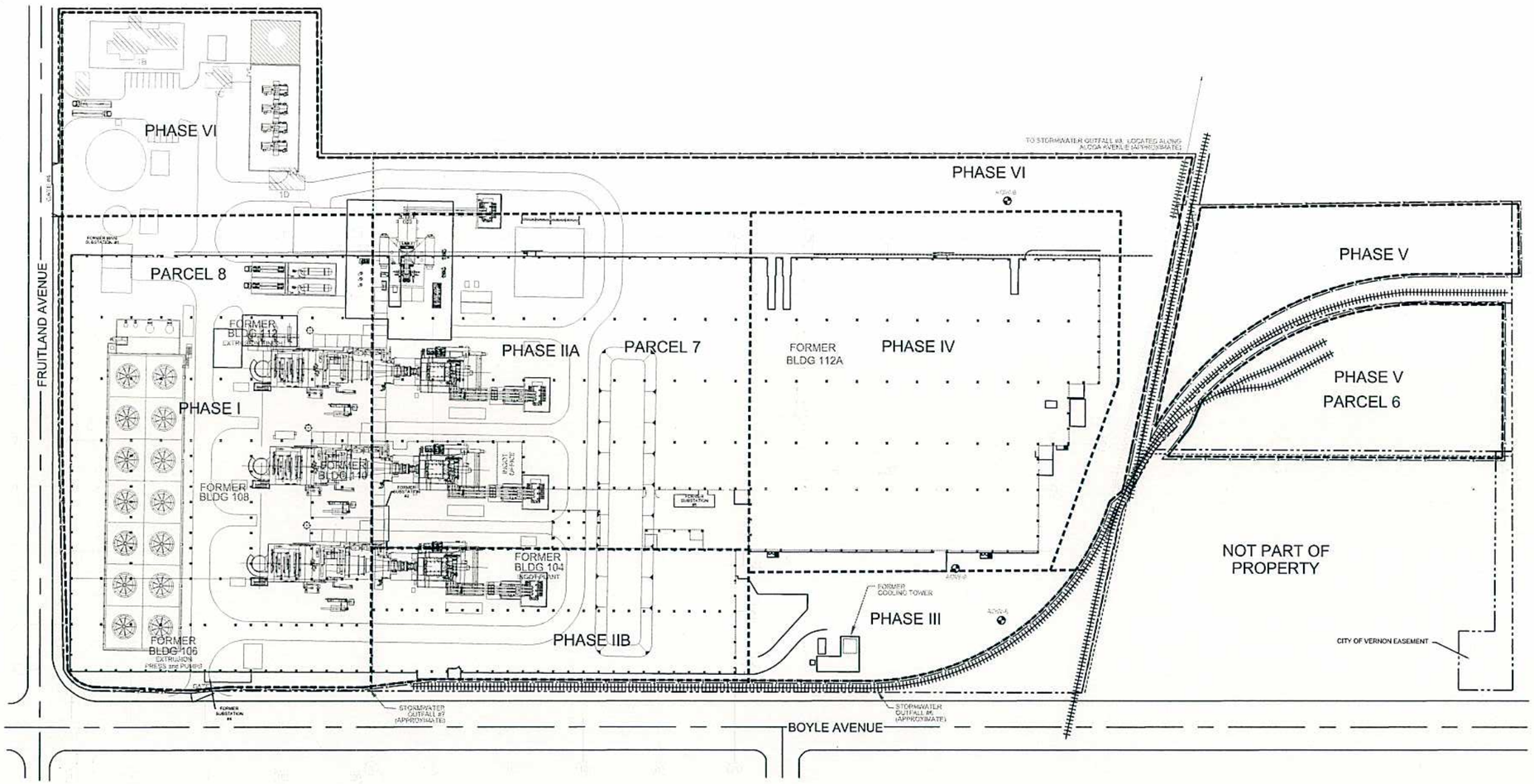

FIGURE WM-61

Approximate Scale in Feet

BASEMAP MODIFIED FROM PECHINEY CAST PLATE, INC. SITE PLAN DATED OR JAN 02, GERAGHTY & MILLER, INC. "GROUNDWATER ELEVATION AND VOLATILE ORGANIC COMPOUND CONCENTRATIONS DECEMBER 8, 1994" FIGURE DATED 2-2-96, ALUMINUM COMPANY OF AMERICA "WORKS GENERAL-MAP" FIGURE DATED 10-10-84, AND LOS ANGELES COUNTY ASSESSOR'S OFFICE PARCEL MAP 8310 / SHEET 8 DATED 11-5-58.

NOTE:

SITE BOUNDARY AND GROUNDWATER MONITORING WELL LOCATIONS ARE APPROXIMATE.

PROPOSED POWER PLANT FOOTPRINT
WITH PHASING AREAS
Former Pechiney Cast Plate, Inc., Facility
3200 Fruitland Avenue
Vernon, California

By: SBN	Date:04/05/07	Project No. 10627.001
Geomatrix		Figure 4

Plot Date: 04/09/07 - 2:15pm, Plotted by: sneeb
Drawing Path: Y:\ 10627.001 B, acad\ , Drawing Name: Proposed Power Plant.dwg

- Sixty-six concrete samples were collected from the footprint of former Buildings 106, 108, and 112.
- Forty-three concrete samples were collected from the footprint of the former Building 104 (also known as the Cast House).
- Twenty-four concrete samples were collected from the footprint of the former Building 112A.
- Eighteen concrete samples were collected along the perimeter of the concrete slab associated with former Buildings 104, 112, and 112A.
- In addition, 32 concrete samples were collected in July 1998 in Buildings 104, 106, 108, 110, 112 and 112A during previous assessment activities conducted by Alcoa.

The results of the concrete sampling and testing will be presented in the FS/RAP. The removal, segregation, and disposal of PCB-impacted concrete will occur during the below-grade demolition and remediation work. Details of the proposed remedy will be provided in the FS/RAP. One of the proposed remedies for concrete containing PCBs above site-specific risk-based remediation goals will include removal and landfill disposal at an off-site facility permitted to accept PCB-impacted wastes.

In areas where PCBs were detected in concrete, soil associated with these areas was assessed for PCBs during previous investigations conducted by Geomatrix and others. The areas where PCB concentrations in soil exceeded site-specific risk-based remediation goals will be addressed during the below-grade demolition and remediation work. Details of the remedy selection will be provided in the FS/RAP. One of the remedies proposed for PCB-impacted soil will include excavation and landfill disposal at an offsite facility permitted to accept PCB-impacted wastes.

a. If the local agency has determined that certain concentrations of PCBs can remain in the subsurface with a land use covenant, please discuss in detail, and provide documentation of the decisions and site maps showing where those areas are located.

Response: Based on information provided by Geomatrix, a land use covenant will be proposed associated with areas of the Site where PCBs will remain in soil above the site-specific risk-based remediation goals. These land use covenants for the Site will be discussed with DTSC and the City of Vernon Health and Environmental Control Department.

b. For areas where PCBs have been detected at depth (vertical pits building 104), please evaluate and report on contaminant migration to groundwater.

Response: Geomatrix's evaluation of the migration of the PCBs through soil to groundwater will be described in the FS/RAP. According to Geomatrix,

this migration was evaluated by modeling the fate and transport of PCBs in a one-dimensional soil column. The modeling was performed using a commercial software MODFLOW-SURFACT developed by HydroGeologic, Inc. This code is based on the most commonly used groundwater modeling software, MODFLOW, with an additional capability to simulate the vadose zone using Van Genuchten's model. MODFLOW-SURFACT is similar to the commonly used vadose zone code, HYDRUS, developed by the Salinity Laboratory of the United States Department of Agriculture (USDA).

A lithologic profile assumed in the model was based on the soil logs of borings 125, 126, 132, 133, 134, and 135, which were advanced to 150 feet below ground surface (bgs) by Geomatrix. Similar lithology was observed beneath Building 104, where the vertical pits were located. The model consists of thirty 5-foot-thick layers in the vadose zone and a 50-foot-thick layer representing the saturated zone. For each boring log, the percentages of gravel, sand, silt, and clay in 5-foot intervals were estimated. The percentages of gravel, sand, silt, and clay in each model layer were computed by averaging the percentages at the boring locations. The hydrogeologic parameters and Van Genuchten's model parameters were calculated using the computer code ROSETTA developed by the Salinity Laboratory of the USDA. Site-specific bulk density, porosity, and dispersivity values assumed in the model are 96 pounds per cubic foot, 47 percent, and 15 feet, respectively. The sorption partition coefficient and organic carbon content in soil were assumed to be 44800 liters per kilogram and 0.2 percent, respectively. An average infiltration rate of 4 inches per year was applied to the uppermost model layer. This infiltration rate is approximately equal to 25 percent of the average precipitation in the project site area.

The following two sets of analyses were conducted by Geomatrix.

- One set of analyses was performed to estimate the ratios of the PCB concentrations at a source at 15 feet, 30 feet, and 45 feet bgs and the PCB concentration immediately above the water table after 500 years. The model showed that these ratios are all greater than one trillion ($1x10^{10}$). These ratios were used as attenuation factors to back-calculate the PCB concentration in soil resulting in a groundwater concentration at the maximum containment level (MCL) of PCBs in drinking water. The model is conservative because the dilution of PCBs after entering the saturated zone and the degradation of PCBs in the vadose zone are not considered. The back-calculated soil remediation goals for preventing PCB concentrations in groundwater from exceeding the MCL are significantly higher than the PCB concentrations detected in soil at the site.

- Another analysis was performed by conservatively treating the PCB concentrations detected in borings 40 and 95 as a constant concentration boundary condition in the vadose zone. The resulting PCB concentration before entering the saturated zone after 500 years is significantly lower than the MCL for PCBs in groundwater.

These results will also be applied to the reuse of concrete with PCB concentrations below risk-based screening levels within the upper 15 feet of the vadose zone. Native soil remaining below 15 feet bgs is consistent with the modeling parameters used for soil.

63. **Stoddard Solvent Contamination**: The Phase II ESA identifies that contamination from Stoddard solvent exists in the subsurface. It is also stated that Areas B and D are not vertically defined. The ESA states that it has been adequately demonstrated that biodegradation (i.e., breakdown of contaminants) is occurring. However, other sections of the report state that 'with few exceptions, the concentration distribution data from the recent characterization is consistent with previous surveys.' Please provide documentation that clearly demonstrates that the contamination has been reduced by biodegradation / natural attenuation.

Response: According to City records, in 1984 employees for Alcoa, a previous owner of the site, discovered a broken underground Stoddard solvent transport pipeline under a building. The Stoddard solvent pipeline supplied solvent from underground tanks to an aluminum processing area within the building. Notification of the release was made to reporting agencies including the Water Quality Control Board, Los Angeles Region. Alcoa repaired the pipeline and conducted an investigation to determine the extent of the contamination. A follow-up report was prepared and submitted to the Water Board. The report documented the depth (to 45 feet) and lateral extent of the contamination. Onsite concurrence by Water Board staff was noted.

In 1994 and 1995, during the closure of one half of the Alcoa facility, an underground tank removal project was initiated under permits issued by the City of Vernon Community Services and HECD. The work plan for closure of the Alcoa facility and removal of the Stoddard solvent underground tanks included a reassessment of the solvent contamination. A detailed report, prepared by an environmental consultant, Morrison Knudsen, provided additional documentation on the extent of the contamination. Based on the fact that the report showed that the degree of petroleum hydrocarbon contamination associated with the Stoddard solvent exceeded screening levels, the HECD directed Alcoa to evaluate remediation options.

In March 1996, Alcoa submitted a report titled "Intrinsic Bioremediation of Stoddard Solvent Area Soils at Alcoa's Vernon, California Facility, January 1996." The report presented "weight-of-evidence" supporting data to demonstrate that intrinsic biodegradation was occurring naturally at the site and would reduce the mass of the contamination within a five to ten year period. Alcoa further supported the less intrusive option of biodegradation by pointing out the following:

1. The source of the Stoddard solvent was no longer on the site.
2. The solvent contamination was contained within the subsurface soil below concrete flooring and above a silty clay layer located between 45-50 feet below grade.
3. Ongoing production in the building would not be impacted economically by the biodegradation process.
4. There would be no expected current or future exposures causing human health risks ,due to the maintenance of the cap over the contamination and the ongoing monitoring of the biodegradation process.

HECD concurred with the remediation option of intrinsic biodegradation based on the following:

1. Sufficient evidence was presented that defined the extent, including the depth, of the contamination.
2. Presentation of documentation that the Stoddard solvent contamination was amenable to intrinsic biodegradation.
3. The contamination did not impact groundwater or pose a significant immediate threat to public health.
4. Major portions of the contamination were under a building and equipment that continued to be active. Physical removal of the contamination would cause severe business disruption and unreasonable economic impact.
5. Periodic monitoring to verify that the contamination was not migrating beyond known boundaries was to be ongoing.
6. The source of the contamination was removed.

City records show that Alcoa has periodically assessed the progress of the biodegradation in four areas of the contaminated zone since 1996. Based on the most recent monitoring survey (Number 5, dated May 25, 2006), the average reduction in total Stoddard solvent concentration in each area is as follows: Area A, 67.6 percent; Area B, 29.6 percent; Area C, 58.3 percent; and Area D, 38.6 percent.

64. It also appears that a proposal for continued monitored natural attenuation (MNA) of the contaminant plume in the vadose zone is likely to be submitted by the applicant at some future date. While this may be an option, it has not been demonstrated that it can be successfully applied to this site. Please provide the proposal for continued MNA of the contaminant plume.

The following DTSC guidance, which incorporates US Environmental Protection Agency (USEPA) requirements, is provided with regard to the MNA approach and deliverables necessary to respond to the data requests.

a. USEPA's directive provides that all viable remedial options shall be evaluated and compared during a study phase leading to a selection of a remedy. In this case, MNA is apparently the sole remedy proposed for the site.

b. Under the DTSC Office of Solid Waste and Emergency Response (OSWER) programs, MNA must still be protective of human health and the environment. One of the key principles of the OSWER program is that contaminated soil shall be remediated to achieve an acceptable level of risk to human and environmental receptors and to prevent any transfer of contamination to other media (i.e., soil and groundwater). Further, groundwater shall be considered to have 'beneficial use' whenever possible. In this case, transfer of contaminants from soil matrix to vapor and groundwater has not been fully evaluated.

c. A conceptual site model (CSM) shall be presented. CSMs reflect both the level of site understanding and the amount of information and complexity of analysis required to support the decisions that need to be made.

d. The 'mass' of contaminants shall be quantified. The nature and extent of the contamination shall be clearly defined. Figures shall be presented which depict the outline of the plume, including its vertical and lateral limits.

e. It may be necessary to conduct contaminant fate and transport models to further support the theory that the 'mass' of contaminated soils is decreasing through biodegradation processes, and that any remaining contamination does not pose a risk to human health or the environment.

f. Geologic cross sections and boring logs signed by a professional geologist shall be submitted which support the contention that a 'high quality clay layer' exists in the subsurface; and that this clay layer successfully limits vertical migration of contaminants to the aquifer.

g. Groundwater affected by the Stoddard solvent plume shall be addressed. Monitoring wells shall be installed with a plan for reporting on the results of groundwater sampling from the wells. Provide a model of the migration of Stoddard solvent contaminants to the groundwater aquifer.

Response: With the closure of production activities at the facility and the proposed demolition of the buildings and structures, HECD directed Alcoa, in July 2006, to re-evaluate remedial options, including the previously approved MNA plan. In addition, clean-up options have been discussed with the current property owner, Pechiney. At this time, no final decision

has been made regarding future remediation of the Stoddard solvent contamination.

65. **Volatile Organic Compounds (VOCs):** Elevated concentrations of VOCs exist in the subsurface at the site of the former Alcoa/Alcan facility. For example, vapor phase TCE was detected at 1,900 micrograms per liter (ug/l) at 15 feet below ground surface (bgs). This concentration presents a significant risk to human health and the environment according to DTSC. Please provide a complete delineation of the vapor plume and an indoor air risk assessment, following DTSC and USEPA Guidance and using the J & E model for this property prior to redevelopment. Further, the risk to groundwater from migration of VOCs shall also be addressed in the response.

Response: The lateral extent of the onsite soil vapor plume in the northwest corner of the site (near the intersection of Fruitland and Boyle) was assessed by Geomatrix during the Supplemental Phase II ESA. The highest concentration of TCE was detected near the northwest corner of Building 106. The extent of the VOCs was further assessed with the collection and analysis of soil samples from predominantly fine-grained sediments to a depth of 150 feet bgs with the collection of hydropunch groundwater samples at each boring. Based on the soil data, the highest concentrations of VOCs were detected in the fine-grained sediments at about 47 to 50 feet bgs within the northwest corner of Building 106. The lateral and vertical extent of VOCs in soil and soil vapor was assessed onsite to the extent necessary to evaluate potential risk to human health (during redevelopment and future site use) and groundwater.

As part of the FS/RAP being prepared by Geomatrix for the Site, a screening-level human health risk assessment (HHRA) was prepared in which exposure to vapors in indoor air was evaluated for future industrial workers using the Johnson and Ettinger (J&E) model (J&E, 1991) pursuant to the U.S. EPA Guidance for Evaluating the Vapor Intrusion to Indoor Air Pathway from Groundwater and Soils (U.S. EPA, 2002) and California Environmental Protection Agency (Cal-EPA) Guidance for the Evaluation and Migration of Subsurface Vapor Intrusion to Indoor Air and Human Exposure-Based Screening Numbers Developed to Aid Estimation of Cleanup Costs for Contaminated Soils (DTSC, 2005 and OEHHA, 2005). According to Geomatrix, the maximum detected concentration of vapor phase TCE of 1900 µg/L was found to contribute significantly to potential cancer risks and noncancer hazards for the future industrial worker, and therefore, further evaluation of potential exposure was necessary. An indoor air inhalation exposure pathway for future site workers ("high" occupancy areas) was eliminated based on the proposed locations of the power plant office buildings, which are over 100 feet from the area where TCE was detected in soil vapor. Chemical attenuation analyses were also performed in the FS/RAP using the Attenuation Factor method developed by the LARWQCB for VOCs (RWQCB, 1996) to establish soil remediation goals for VOCs, including TCE, for the protection of groundwater.

Based on information provided by Geomatrix, the results of the risk-based screening levels established in the HHRA and the attenuation modeling for soil impacts to groundwater, the proposed remedy to address these soil impacts is in-situ soil vapor extraction (SVE). This evaluation and proposed remedy selection will be included in the FS/RAP. Extraction wells are proposed in the upper 50 feet, with additional extraction wells proposed below 50 feet to reduce the mass of VOCs in the vadose zone for the protection of groundwater. SVE would be performed in compliance with South Coast Air Quality Management District permitting requirements during the below-grade demolition and remediation work. The proposed remedy will eliminate any significant risk to future workers at the site.

BACKGROUND

In the Phase II ESA, PCB Notification Plan, Attachment WM-44C, page 3, the following statement is made: "The selection of the cleanup level will be based on whether the City of Vernon's Health & Environmental Control Department approves of the reuse of PCB-impacted concrete (e.g. porous surfaced waste) as crushed fill material where the Site has been designated as low occupancy use."…

The following data requests are presented to address concerns with risk to future occupants at the site, as well as threats to groundwater quality.

DATA REQUEST

66. Please provide what land use needs shall be considered when making decisions about what contaminants remain on site and what portions of the site will be remediated prior to construction/operation of VPP.

    Based on the future land use of the site as industrial, remediation goals will be set for individual contaminants based on federal and state remediation guidance. For every remedial project in the City, HECD initially has the goal of removing all contaminants to non-detect levels. This goal can be revised taking into consideration the degree of environmental threat and site-specific conditions. Based on preliminary lay-out plans for the proposed Vernon Power Plant, HECD intends to modify depth requirements for remediation from normal policy. The footprint of the proposed power plant was used to assess areas of the site that would be considered "high" and "low" occupancy during preparation of the HHRA. Based on the proposed layout of the power plant (see Figure WM-61), the majority of the Site will be occupied by power generating equipment (i.e., "low" occupancy areas), with power plant office buildings (i.e., "high" occupancy areas) located in the northeastern portion of the site. The proposed extent of required remediation at the site will be based on the results of the screening level HHRA and the vadose zone modeling completed for potential risks to groundwater. One of the proposed remedies for VOC-impacted soil will be either soil removal in the upper 15 feet or by SVE of both shallow and deep soil. The proposed SVE remedy will be conducted until the commencement of power plant construction, then suspended during construction, and re-activated after construction, if necessary.

BACKGROUND

Risk Assessment: If a 'Risk Based Closure' is proposed for this property, along with a 'Land Use Covenant' (as mentioned in the Phase II ESA reports), then it will be necessary to conduct a risk assessment for the site. Current conditions at the site must be assessed in order to adequately predict the risk to human health and the environment. The intrusion of subsurface vapors into buildings is one of many exposure pathways that must be considered in assessing the risk posed by releases of hazardous chemicals into the environment. DTSC recommends an approach for evaluating vapor intrusion into buildings and its subsequent impact on indoor air quality. If VOCs are present in the subsurface at a site, the vapor intrusion pathway shall be evaluated along with the exposure pathways identified in other guidance (Preliminary Endangerment Assessment (PEA) Guidance Manual, DTSC, reprinted 1999; Risk Assessment Guidance for Superfund (RAGS), Volume 1 Human Health Evaluation Manual, Part A, United States Environmental Protection Agency (USEPA 1989). The Comprehensive Environmental Response Compensation and Liability Act (CERCLA) and Resource Conservation and Recovery Act (RCRA) are applicable to the proposed site and subsequent facilities and will need to be addressed in the Risk Assessment.

As discussed by the USEPA in their risk assessment guidance (USEPA RAGS, 1989), the risks from each chemical and from all applicable exposure pathways shall be summed to obtain the overall screening level risk posed by chemicals detected at the facility/site. The guidance (found on the link provided below), along with USEPA's vapor intrusion guidance, provides technically defensible and consistent approaches for evaluating vapor intrusion to indoor air, based upon the current understanding of this exposure pathway.

http://www.dtsc.ca.gov/AssessingRisk/upload/HERD_POL_Eval_Subsurface_Vapor_Intrusion_interim_final.pdf

DATA REQUEST

67. Please provide a complete risk assessment for the site that addresses all contaminants of concern detected at the facility, including VOCs, metals (including hexavalent chromium), naphthalene, and other Semivolative Organic Compounds (SVOCs), total petroleum hydrocarbons, and PCBs. Further, because vapors can migrate, it may not be appropriate to separate the site into 'high' occupancy and 'low' occupancy areas, as suggested in the Phase II report, unless appropriate engineering controls are developed and implemented. Any such controls would need to be monitored under a DTSC operation and maintenance agreement as part of the land use covenant.

    Response: According to Geomatrix, a screening-level HHRA is being prepared as part of the FS/RAP for the site. With the exception of metals found to be below

background concentrations (consistent with the City of Vernon H&EC requirements for metals), COCs detected at the site consist of PCBs, TCE, tetrachlorethene (PCE), benzene, and arsenic and have been evaluated in the HHRA. Based on information provided by Geomatrix, the worst-case exposure scenarios have been evaluated by comparing maximum detected concentrations of contaminants in soil and soil vapor against California Human Health Screening Levels (CHHSLs) (OEHHA, 2005) where available. Risk-based screening levels were developed for chemicals for which CHHSLs were not available or when exposure scenarios were not evaluated by OEHHA (e.g., for the evaluation of potential risks to construction workers). Following U.S. EPA and Cal-EPA risk assessment guidelines (U.S. EPA, 1989; DTSC 1996, 1999; OEHHA, 2005), incidental ingestion of soil, dermal contact with soil, inhalation of particulates in ambient air, and inhalation of volatiles in ambient or indoor air are the exposure pathways that are considered complete for future industrial and construction workers at the site. These exposure pathways have been incorporated into the development of the risk-based screening levels. Following U.S. EPA (U.S. EPA, 2002) and Cal-EPA (DTSC, 2005; OEHHA, 2005) vapor intrusion guidance, the J&E model (J&E, 1991) was used in the estimation of soil vapor screening levels to predict the transport of contaminant vapors from soil into indoor air. Overall screening level risk posed by chemicals detected at the site has been evaluated by summing estimated chemical-specific cancer risks and noncancer hazard quotients. Current conditions at the site have been assessed by including data from soil and soil vapor samples in the screening-level evaluation except for data from soil samples no longer in place following excavations (e.g., excavation of dip tanks, sumps, stormwater outfall discharge areas, waste disposal pits, and underground storage tanks). Although the indoor air exposure pathway was evaluated, it was later eliminated for the selection of the risk-based remediation goals based on the location of proposed power plant offices ("high" occupancy areas), which are located over 100 feet from the area where VOCs were detected in soil vapor.

68. It is not clear from the ESA reports if the areas listed below were adequately characterized:

    a. Sump (sediments within), in the boring 107 area

    Response: The contents of the sump and soil directly adjacent to the sump were sampled and tested during Geomatrix's Supplemental Phase II ESA. The sediment and soil were tested for petroleum hydrocarbons, PCBs and metals. Petroleum hydrocarbons, PCBs and metals were detected in the sediment sample collected from the base of the sump (approximately 2.3 feet below grade). Petroleum hydrocarbons were detected in one soil sample at a depth of about 7 feet at concentrations well below the RWQCB screening levels for diesel- and heavy-range hydrocarbons. Metals were detected in soil at concentrations below California background levels (Bradford, et. al., 1996) and

PCBs were not detected. Based on these result further testing of the soil adjacent to the sump was not warranted.

Furthermore, the sediment contained within the sump was removed and transported off-site for disposal during the above-grade demolition work.

b. Saw area (PCBs)

Response: In Building 104, Geomatrix advanced soil borings in accessible locations around the saw to assess the extent of PCBs in soil below concrete found to be impacted with these chemicals. PCBs were detected in soil beneath the concrete to depths of 1.5 to 3 feet. These compounds were not detected in soil samples from a depth of 6 feet. The vertical and lateral extent of PCBs in soil was assessed to the north, east and south of the saw, but the area to the west of the saw was not accessible based on the location of nearby concrete pits and subsurface structures. Although additional soil testing will be conducted during the below-grade demolition work to the west of the saw, the lateral and vertical extent of PCBs in soil was assessed to the extent necessary to evaluate potential risk to human health (during redevelopment and future Site use) and to evaluate a remedy.

c. Outfall #6 (metals)

Response: Geomatrix advanced soil borings in accessible areas near the storm water outfall. Access for soil sampling was limited to the north due to under ground conduits (storm drain/sewer lines), to the south due to sampling refusal, and to the west by the rail line. Previous soil testing was conducted to the west and south of the outfall by Alcoa, and a soil removal action was conducted to the west and south of the outfall. Based on the combined data, the vertical and lateral extent of metals (including copper, lead, and arsenic) was assessed at this location. Although additional soil testing will be conducted during the below-grade demolition work in areas that were previously not sampled, the lateral and vertical extent of metals in soil was assessed to the extent necessary to evaluate potential risk to human health (during redevelopment and future Site use) and to evaluate a remedy.

d. Former etch station (metals)

Response: Although below California background level (Bradford, et. al., 1996), lead was detected in soil at a depth of 2.6 feet at 82 mg/kg. Geomatrix assessed the vertical and lateral extent of metals (including lead) in soil during the Supplemental Phase II ESA.

e. Rail line

Response: One sample location was advanced on-site near one of the main rail spurs south of building 112A. Sampling at this location was based on the detection of arsenic in shallow soil above the California background level during previous investigations. Geomatrix advanced an additional soil boring

in this area, and arsenic was detected below the California background level. Sampling along the on-site buried rail lines was limited by the overlying pavement, and as such, it was determined that sampling below these rail lines would be best completed during their removal proposed as part of the below-grade demolition work.

Please provide characterizations of the listed areas.

Response: See above.

Supporting References

Bradford, G.R., A.C. Chang, A.L. Page, D. Bakhtar, J.A. Frampton, and H. Wright, 1996, Background Concentrations of Trace and Major Elements in California Soils, Kearney Foundation of Soil Science, Division of Agriculture and Natural Resources, University of California, March.

Department of Toxic Substances Control (DTSC), 1996, Supplemental Guidance for Human Health Multimedia Risk Assessments of Hazardous Waste Sites and Permitted Facilities, Office of the Scientific Advisor, California Environmental Protection Agency, Department of Toxic Substances Control, Sacramento, California.

DTSC, 1999, Preliminary Endangerment Assessment (PEA) Guidance Manual, California Environmental Protection Agency, Department of Toxic Substances Control, Sacramento, California.

DTSC, 2005, "Guidance for the Evaluation and Migration of Subsurface Vapor Intrusion to Indoor Air", Interim Final, California Environmental Protection Agency, February 7.

Johnson, P.C., and R. A. Ettinger, 1991, Heuristic Model for Predicting the Intrusion of Contaminant Vapors into Buildings, Environmental Science and Technology, v. 25, n. 8, p. 1445 – 1452.

Office of Environmental Health Hazard Assessment (OEHHA), 2005, Human Exposure-Based Screening Numbers Developed to Aid Estimation of Cleanup Costs for Contaminated Soil, California Environmental Protection Agency, January.

Regional Water Quality Control Board (RWQCB) – Los Angeles Region, 1996, Interim Site Assessment & Cleanup Guidebook, Updated March 2004.

United States Environmental Protection Agency (US EPA), 1989, Risk Assessment Guidance for Superfund, Human Health Evaluation Manual, Part A, Office of Solid Waste and Emergency Response, 9285.701A, December.

U.S. EPA, 2002, "Guidance for Evaluating the Vapor Intrusion to Indoor Air Pathway from Groundwater and Soils (Subsurface Vapor Intrusion Guidance)", Draft Federal Register, Volume 67, Number 230, Pages 71169 through 71172, November 29.

VERNON POWER PLANT
(06-AFC-4)
DATA RESPONSES, SET 3A

Technical Area: Transmission System Engineering
Author: Ajoy Guha, P.E.; Mark Hesters

INTRODUCTION

Staff needs to determine the system reliability impacts of the project interconnection and to identify the corresponding facilities needed to support the proposed VPP. The interconnection must comply with the Utility Reliability and Planning Criteria, North American Electric Reliability Council (NERC) Planning Standards, NERC/Western Electricity Coordinating Council (WECC) Planning Standards, and California Independent System Operator (CAISO) Planning Standards. In addition the California Environmental Quality Act (CEQA) requires the identification and description of the "direct and indirect significant effects of the project on the environment."

For determining compliance with planning and reliability standards and the identification of direct or indirect downstream transmission impacts, staff relies on the System Impact and Facilities Studies of the proposed project. Staff also relies on the review of these studies by the agencies responsible for insuring the interconnecting grid meets reliability standards. The studies analyze the effect of the proposed project on the ability of the transmission network to maintain reliability of the interconnected systems, given the standards noted above. These standards apply not only to interconnected system operation but also to individual service areas. When the studies determine that the project will cause a violation of system reliability criteria, the potential mitigation or upgrades required to bring the transmission system into compliance are identified. The mitigation measures often include the construction or modification
of downstream transmission facilities.

BACKGROUND

After reviewing the March 5, 2007, Data Responses Set 2A, with regard to Transmission System Engineering (TSE) Data Request No. 52, staff is concerned with the potential impacts noted in the short circuit study by Southern California Edison (SCE). SCE's study determined that thirteen circuit breakers (CB) at its Lighthipe substation and two CBs at its Laguna Bell substation will exceed fault duties due to addition of the VPP. For operation of the VPP, the CBs at these SCE substations would need replacing or upgrading.

DATA REQUEST

69. Please provide a statement that indicates your agreement with an SCE-approved mitigation plan for the replacement/upgrade of the circuit breakers at the identified substations to prevent short circuit

duty overloads caused by the operation of the VPP. The mitigation plan should include the expected completion date for each circuit breaker replacement/upgrade.

Response: The Applicant will replace or upgrade any circuit breakers that are identified in the system interconnection process. CEC is assured of this because no system operator would allow operation of a generating facility that would cause system faults known to exceed relevant breaker ratings.

The Applicant does not believe that the list of breakers that may need replacement or upgrade is final. We believe that some breakers may be added and some may be removed prior to completing an Interconnection Agreement. In particular we believe that the "worst case scenarios" outlined in the SIS greatly overstate the potential need for breaker modifications. There are essentially three reasons for this:

First, the CAISO queue contains many projects that are not likely to be built, when these projects are withdrawn from the queue, we expect changes in the lists of potential breaker replacements.

Second, while SCE's criteria and approach are generally good, its 100 Amp criteria for increase in fault current is below typical engineering precision and good utility practice. For example, for a 12 kA breaker 100 Amps is less than 1 percent of the breaker rating. Breaker ratings on SCE's 230 kV system are more typically 40 kA and above.

Finally, because we have not yet been provided with a complete short circuit case, we are unable to examine it and perform normal due diligence to confirm SCE's conclusions.

A date for upgrading and replacing each breaker has not been determined by SCE. These dates will be determined during detailed engineering following signing an Interconnection Agreement and CEC Certification. However, details of the breaker replacement schedule are not a concern because this work can be completed well before VPP operation. The SIS states that:

> "The transmission schedule would be the controlling element of the Project. All other elements would be well within the 30-Month time frame…"

Thus, upgrade and replacement of any necessary breaker would occur prior to operation of the Vernon Power Plant.

BACKGROUND

A review of the March 5, 2007, Data Responses-Set 2A, with regard to TSE Data Request Nos. 55 to 58, reveals that the System Impact Study (SIS) performed by SCE was limited to identifying system impacts within the SCE system only, not for any other adjacent interconnected systems beyond SCE.

The 914 MW VPP is proposed to be interconnected to SCE's system but in close proximity to the neighboring Los Angeles Department of Water & Power (LADWP) system.

The current SIS does not comply fully with the reliability requirements of the NERC or NERC/WECC planning standards for addressing potential impacts on neighboring transmission systems. The normally open SCE Laguna Bell-Velasco 230 kV tie line to the LADWP system could be closed during emergencies. Therefore, staff believes that an SIS which identifies any impacts to the LADWP system under normal and worst case system conditions (i.e., with and without the tie line closed) would be the most informative.

In this context, please note that during the 2002 AFC process for the City's 134 MW Malburg Generating Station (MGS) interconnection, the SIS performed by Navigant Consulting (Navigant) on behalf of the City included system impacts on the City's 66 kV, SCE and LADWP systems.

DATA REQUEST

70. a. Submit a Power Flow analysis for the LADWP area under normal and probable N-1 & N-2 contingencies and a Short Circuit Duty study for the same area with consultation and approval of the LADWP. The analysis is required to identify the potential system impacts in the LADWP area under 2009 summer peak and light spring system conditions due to interconnection of the 914 MW VPP at the existing Laguna Bell substation.

    b. For any identified reliability criteria violations in the LADWP area, provide respective mitigation measures with a report or approval letter from the LADWP and their expected on-line date.

    c. Provide Power Flow one-line diagrams for the LADWP area for base cases and detected overloads under N-1 & N-2 contingencies.

    Response: VPP chooses the alternative question as the better method for answering this request.

<u>Alternatively</u>,

70. Please provide a LADWP comment letter on the current SCE SIS, or provide a SIS from LADWP discussing the impacts, if any, of the project on its transmission system. If impacts are identified, the letter or study must provide approved mitigation for the impacts.

    Response: Although VPP continues to accept CAISO and SCE's judgment that NERC, WECC, and CAISO standards were met and all of the relevant systems

or portions of systems were included in the studies performed for VPP, we are soliciting LADWP's comments. A copy of the letter to LADWP is provided as Attachment TSE-70A.

As we stated previously in response to an earlier data request, the scope of the SIS produced by SCE was not limited to its system. When queried at the beginning of the process CAISO and SCE assured VPP that the study was broad enough to capture all transmission facilities that might need to be added or modified to accommodate VPP. If staff has specific contingencies that it feels may have been missed by CAISO and SCE, we would be pleased to pursue them with CAISO and SCE or provide an answer ourselves, as appropriate.

While it is true that VPP is geographically in close proximity to LADWP's system, it is electrically remote. Closing the normally open 230 kV tie between Laguna Bell and Velasco would make VPP (and many other proposed Los Angeles Area plants) electrically close to LADWP's system. But because this tie is closed only for emergency conditions, it is not considered for routine transmission upgrades. By e-mail dated May 15, 2007 from Teri Kondo to Abraham Alemu (provided as Attachment TSE-70B) SCE confirmed that all interconnection and local area planning studies are performed presuming that this tie is open. While studies with the tie closed would be informative, because the tie is for emergency use and would be considered only in operation studies, new transmission facilities or upgrades would not be required, making this analysis irrelevant to VPP's application.

Finally, while it is true that the 2002 assessment of the Malburg plant included elements of the LADWP system, review of this study shows that there were no impacts on LADWP's system. Subsequent history also shows that there were no LADWP transmission upgrades due to the addition of Malburg. For instance, pages 13 and 14 of the Navigant study show a maximum impact of 40 Amp on the fault currents at the LADWP Sylmar, Rinaldi, and Toluca substations. This is well below SCE's 100 Amp SCE responsibility ratio and engineering precision and consistent with the results of the current VPP studies. We note further that there is no evidence that Navigant considered faults on the system with the Laguna Bell to Velasco 230 kV tie closed.

ATTACHMENT TSE-70A
LADWP Letter
Review of Vernon Power Plant Interconnection Studies

City of Vernon

LIGHT & POWER DEPARTMENT
Donal O'Callaghan, Director of Light & Power

May 21, 2007

Mr. Mohammed Beshir
Manager, Power System Contract
Los Angeles Dept. of Water & Power
Room 1250
City of Los Angeles
111 North Hope Street
Los Angeles, CA 90012
Tel: 213-367-0237
E-mail: Mohammed.Beshir@ladwp.com

SUBJECT: REVIEW OF VERNON POWER PLANT INTERCONNECTION STUDIES

Dear Mr. Beshir:

As you know the City of Vernon is proposing to interconnect a 914 MW combined-cycle power plant to the California Independent System Operator (CAISO) grid at SCE's Laguna Bell substation. System Impact Studies* (SIS) for the Vernon Power Plant (VPP) have recently been completed and the California Energy Commission (CEC) has requested that we:

> "...provide a LADWP comment letter on the current SCE SIS, or provide a SIS from LADWP discussing the impacts, if any, of the project on its transmission system."

Although the CAISO is obligated to provide impacted WECC member systems copies of the System Impact Study† and based on our May 14th CEC workshop it is our understanding that CEC has requested that CAISO provide Vernon's System Impact Studies (SIS) to you, we are providing you with copies of the SIS for your review and requesting a comment letter.

---

* System Impact Studies for the Vernon plant were completed in two parts, an initial request of 610 MW and an Expansion request of 304 MW.

† Section 3.7, Coordination with Affected Systems. States:

The ISO will notify the Affected System Operators that are potentially affected by the project proposed by the Interconnection Customer. The ISO will coordinate the conduct of any studies required to determine the impact of the Interconnection Request on Affected Systems with Affected System Operators, to the extent possible, and, if possible, the Participating TO will includethose results (if available) in its applicable Interconnection Study within the time frame specified in this LGIP. The ISO will include such Affected System Operators in all meetings held with the Interconnection Customer as required by this LGIP. The interconnection Customer will cooperate with the ISO in all matters related to the conduct of studies and the determination of modifications to Affected Systems, including signing separate study agreements with Affected System owners and paying for necessary studies. An entity which may be an Affected System shall cooperate with the ISO in all matters related to the conduct of studies and the determination of modifications to Affected Systems.

4305 Santa Fe Avenue, Vernon, California 90058 Telephone (323) 583–8811 Fax (323) 826-1425

We are particularly interested in your comment on several issues. First, the SIS(s) were completed assuming that the Laguna Bell to Velasco 230 kV tie was open. By e-mail dated May 15, 2007 from Teri Kondo to Abraham Alemu SCE confirmed that all interconnection and local area planning studies are performed presuming that this tie is open. Please confirm that this is LADWP's practice as well. If it is not your practice, please provide the conditions under which the tie line is closed or studied closed.

Second, with the Laguna Bell to Velasco 230 kV tie line open, please confirm that the impact of VPP, if any, would be similar to other planned projects added to SCE's system in the south bay area. Has LADWP been asked to review the impacts of any other plants attached to SCE's south bay area system? If so which ones?

Third, with the Laguna Bell to Velasco 230 kV tie open please confirm that the contingencies selected and chosen by CAISO and SCE for these studies were adequate to evaluate any impacts on LADWP's system and that there are no impacts on LADWP's system based on these contingencies. If you disagree with this assessment, please let us know what additional contingencies or monitored areas should have been included.

Thank you for your consideration. As we are working to maintain CEC deadlines, please let us know if you are unable to reply before June 8, 2007.

Sincerely,

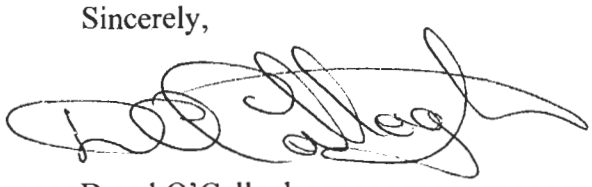

Donal O'Callaghan
Director of Light and Power, City of Vernon

CC: Dr. James Reede, Energy Facility Siting Project Manager

Attachments
1 CD

ATTACHMENT TSE-70B
Email: CEC Data Request (Tie) from
Teri Kondo to Abraham Alemu

Karen S. Chmielewski

From: Teri.Kondo@sce.com
Sent: Tuesday, May 15, 2007 4:45 PM
To: Alemu, Abraham
Cc: Alemu, Abraham; Amos.Ang@sce.com; O'Callaghan, Donal; Nickel, Judy; Phillip.Leung@sce.com; Stephen S. Miller; Teri.Kondo@sce.com; VPP File; Zhang, Yi
Subject: RE: CEC Data Request

Abraham,
Pursuant to my conversation with SCE's Transmission Planning group, please see SCE's confirmation in your email below

Teri Kondo
Southern California Edison Company
T&D Regulatory Policy and Contracts
Phone: (626) 302-8703/ PAX 28703
Fax: (626) 302-1152/ 21152

"Alemu, Abraham" <AALemu@ci.vernon.ca.us>
05/14/2007 04:14 PM

To <Teri.Kondo@sce.com>
cc "O'Callaghan, Donal" <docallaghan@ci.vernon.ca.us>, "Nickel, Judy" <JNickel@caiso.com>, <Phillip.Leung@sce.com>, "Stephen S. Miller" <ssmiller@cai-engr.com>, "VPP File" <vppdoccntrl@ci.vernon.ca.us>, "Zhang, Yi" <YZhang@caiso.com>, <Amos.Ang@sce.com>, "Alemu, Abraham" <AALemu@ci.vernon.ca.us>
Subject RE: CEC Data Request

Teri,
Thank you very much. Your confirmation of SCE's study methodology is all that we were seeking. However, for completeness and due to CEC's persistence we would like you to:

1. Confirm that the power flow studies for all affected projects are also performed with the Velasco to Laguna Bell 230 kV tie open. Yes, the power flow studies for all affected projects are also performed with the Velasco to Laguna Bell tie open.

2. We presume also presume that SCE's routine local area planning studies are also performed with the Velasco to Laguna Bell 230 kV tie line open. Could you please confirm this as well? Yes, SCE's planning studies are also performed with the Velasco to Laguna Bell tie open.

-----Original Message-----
From: Teri.Kondo@sce.com [mailto:Teri.Kondo@sce.com]

Sent: Wednesday, April 11, 2007 9:57 AM
To: Alemu, Abraham
Cc: O'Callaghan, Donal; Nickel, Judy; Phillip.Leung@sce.com; Stephen S. Miller; VPP File; Zhang, Yi; Amos.Ang@sce.com
Subject: RE: CEC Data Request

Abraham,

I spoke with SCE's Transmission Planners regarding Vernon's question on the Velasco to Laguna Bell 230 kV tie. The Planners have confirmed that SCE's short circuit analyses for all affected projects are consistently performed with the tie open.

My understanding from our discussion yesterday is that Vernon only wanted SCE to confirm that the studies are being performed consistently, and that Vernon is not requesting an additional study with the tie closed.

Teri Kondo
Southern California Edison Company
T&D Regulatory Policy and Contracts
Phone: (626) 302-8703/ PAX 28703
Fax: (626) 302-1152/ 21152

"Alemu, Abraham" <AALemu@ci.vernon.ca.us>
03/29/2007 04:04 PM

To "Nickel, Judy" <JNickel@caiso.com>
cc "Zhang, Yi" <YZhang@caiso.com>, <Edgardo.Romero@sce.com>, <Phillip.Leung@sce.com>, "VPP File" <vppdoccntrl@ci.vernon.ca.us>, "Miller, Stephen" <ssmiller@cai-engr.com>, "Kondo, Teri" <teri.kondo@sce.com>, "O'Callaghan, Donal" <docallaghan@ci.vernon.ca.us>, "Alemu, Abraham" <AALemu@ci.vernon.ca.us>
Subject RE: CEC Data Request

Judy,
Please see the attached. Thank you.
-----Original Message-----
From: Nickel, Judy [mailto:JNickel@caiso.com]
Sent: Thursday, March 15, 2007 4:12 PM
To: Alemu, Abraham; Kondo, Teri
Cc: Zhang, Yi; Edgardo.Romero@sce.com; Phillip.Leung@sce.com; VPP File; Miller, Stephen
Subject: RE: CEC Data Request

Abraham:

Has Vernon engaged LADWP to address the issues relevant to their system per your attached letter that you received on February 2, 2007? The ISO and SCE can forward a copy of the final System Impact Study report to LADWP but it only addresses the SCE system and does not address Affected Systems such as LADWP.

Judy Nickel
Project Manager
California ISO
(916) 608-7062

From: Alemu, Abraham
Sent: Monday, February 26, 2007 2:44 PM
To: Kondo, Teri; Nickel, Judy
Cc: Zhang, Yi; Edgardo.Romero@sce.com; Phillip.Leung@sce.com; VPP File; Miller, Stephen
Subject: CEC Data Request

Per our discussion during our conference call earlier, attached please find CEC Data Request relating to Transmission Engineering (#s 52 to 59).

<<02-02-07 CEC Data Requests Round 2.pdf>>

Abraham Alemu
City of Vernon
4305 Santa Fe Avenue
Vernon, CA 90058
Tel: (323) 583-8811 ext. 250
Fax: (323) 826 - 1425
e-mail: aalemu@ci.vernon.ca.us

(See attached file: LADWPReviewComments.doc)

VERNON POWER PLANT
(06-AFC-4)
DATA RESPONSES, SET 3A

BACKGROUND

After reviewing the March 5, 2007 Data responses-Set 2A with regard to TSE Data Request No. 59, staff observes that the City's 66 kV system is connected to the Laguna Bell 66 kV bus. Therefore, the VPP could contribute additional fault currents in the 66 kV network. Moreover, load flows in the 66 kV system may be affected for different generation schedules from the City-owned plants including the MGS or any other generating units being turned on or off. Please note that according to the 2002 SIS performed by Navigant, the interconnection of the MGS caused an increase in fault level in the City's system. It warranted a mitigation plan by the City for replacement or upgrade of forty 66 kV circuit breakers in their 66 kV system.

The mitigation of identified VPP-related overloads on the City's 66 kV system could require the construction or upgrade of downstream facilities. A study of the City's 66 kV system is required to determine whether or not downstream mitigation is required and to identify the whole of the proposed project.

DATA REQUEST

71. a. Provide a Power flow analysis for the City's 66 kV system under 2009 summer peak and spring system conditions for normal base cases and probable N-1 & N-2 contingencies in the 66 kV and SCE systems.

    Response: A power flow analysis of the City of Vernon's 66 kV system would show no change for pre- and post-VPP cases because the City's 66 kV system is radially connected at 66 kV. VPP will interconnect to the Laguna Bell 230 kV system. At the May 14, 2007 workshop CEC staff suggested that a one-line diagram showing the radial connection of the City of Vernon's system would document this connection. While this diagram is in staff's possession, we have extracted a One-line Diagram from the Malburg system and provided it as Attachment TSE-71A for reference.

    We observe that while it is true that raising or lowering MGS generation would change the flows on Vernon's system, MGS is not an issue in this case. MGS has a CEC license, is integrated into the City's system and is licensed for operation for its complete output range. The City of Vernon does not plan to change the operation or modify Malburg due to the addition of VPP. As a new efficient generating unit, VPP will change the dispatch of Los Angles area generation, but this has been accounted for in the typical way in the SIS.

    b. Provide Power Flow diagrams for the City's 66 kV system for base cases and for identified overloads under N-1 & N-2 contingencies.

    Response: See Data Response 71.a., above.

c. Provide a Short Circuit Duty study report for the City's 66 kV system. For any identified reliability criteria violations in the City's 66 kV system, identify and describe mitigation measures with their expected on-line date.

Response: VPP will prepare a short circuit analysis of its system and provide it to the CEC as soon as possible. For accuracy we note that the 40 breakers upgraded by the City of Vernon prior to the addition of Malburg were a part of a system improvement plan, not a part of the Malburg project. Based on the fact that VPP is relatively electrically remote from the 66 kV system, that no SCE 66 kV breakers at Laguna Bell required replacement, and that several small generators attached to the City of Vernon's system have been retired, we do not expect any impacts.

72. Note: This number was skipped.

ATTACHMENT TSE-71A
One-Line Diagram of Vernon 66 kV System

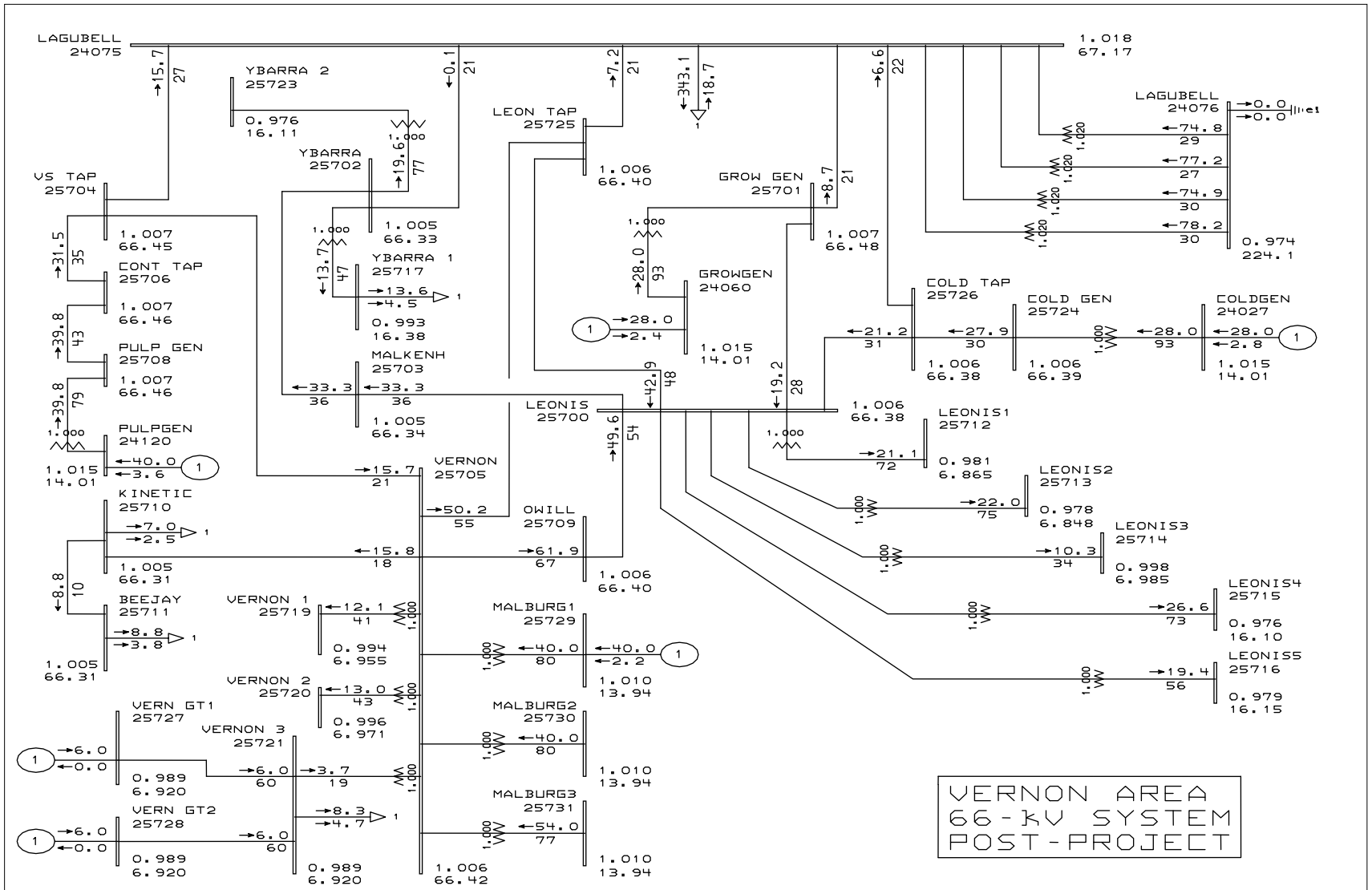

General Electric International, Inc. PSLF Program MW/Pct Thu Mar 07 09:27:32 2002

GENERAL ELECTRIC COMPANY	MALBURG STUDIES CASE "mal-hs-post-1.sav" SCE 2003 HS CASE (FEB. 2001) W/ UPDATED SCE LOADS; VERNON 66-KV SYSTEM; AND NEW GENERATION ON SCE AND LADWP PER STUDY PLAN	SOUTH COAST GENERATION @ 5,088 MW ADD MALBURG @ 134 MW; SCHEDULE TO PATH 26	vernon66k_post.drw mal-hs-post-1.sav Rating = 1

VERNON POWER PLANT
(06-AFC-4)
DATA RESPONSES, SET 3A

BACKGROUND

The interconnection of the VPP requires CAISO review and concurrence or approval of the SIS and Facility Study. The CAISO review letter is required to provide study validation and final approval of the proposed interconnection and any necessary mitigation measures.

DATA REQUEST

73. Provide the CAISO preliminary and/or final interconnection approval letter(s).

Response: VPP continues to maintain that CAISO preliminary and final interconnection approval letters are obsolete because CAISO now controls the process. Via e-mail dated June 23, 2006, entitled "CAISO: Grid Operation, ISO News and Information / CAISO Centralized Large Generator Interconnection Study Procedures," included as Attachment TSE-73A, CAISO announced that:

> Effective June 23, 2006, as filed under Appendix U to the CAISO Tariff, the CAISO has assumed responsibility for:
>
> 1) Conducting all Interconnection Studies for Large Generating Facilities (those greater than 20 MW) that connect to the CAISO Controlled Grid, and
>
> 2) Establishing Interconnection Study agreements directly with Interconnection Customers.
>
> Accordingly, the CAISO will coordinate all aspects of the Large Generating Facility Interconnection Study processes for interconnection Customers with proposed facilities greater than 20 MW that connect to the CAISO Controlled Grid. All deposits required by the CAISO Tariff for services involved with the Large Generating Facility Interconnection Study processes should be made payable to the CAISO. Additionally, Interconnection Study agreements for Large Generators will be between the CAISO and the Interconnected Customer, rather than between the interconnecting Participating Transmission Owner and Interconnection Customer

Prior to adopting the Large Generator Interconnection Study Procedures, ISO approval letters were necessary because it provided an opportunity for the ISO to review and provide input on the results of studies and agreements between the applicant and the Transmission Owner. Without this step, contracts unacceptable to the ISO could occur. Once the LGIP was adopted, it is impossible to complete a study that does not have CAISO approval or input.

However, because of CEC's interest, we are trying to confirm our understanding or obtain the procedures related to obtaining preliminary or final interconnection approval letters if these are still relevant. For reference we have attached our e-mail correspondence with ISO ending in an e-mail dated May 15, 2007, with the subject "CEC Data Request" from Abraham Alemu to Judy Nickel , included as Attachment TSE-73B.

▪

ATTACHMENT TSE-73A
CAISO: Grid Operation, ISO News and Information
CAISO Centralized Large Generator Interconnection Study Procedures

FYI
-----Original Message-----
From: Somoano, Jorge
Sent: Monday, June 26, 2006 7:21 AM
To: Alemu, Abraham
Subject: FW: CAISO: Grid Operation, ISO News and Information / CAISO Centralized Large Generator Interconnection Study Procedures

FYI
-----Original Message-----
From: CRCommunications [mailto:CRCommunications@caiso.com]
Sent: Friday, June 23, 2006 12:30 PM
Subject: CAISO: Grid Operation, ISO News and Information / CAISO Centralized Large Generator Interconnection Study Procedures

CALIFORNIA ISO MARKET NOTICE

Requested Client Action: Mark Your Calendar

Date of Distribution: June 23, 2006

Categories: Grid Operation, ISO News and Information

Subject: CAISO Centralized Large Generator Interconnection Study Procedures

---

Summary: Effective June 23, 2006, as filed under Appendix U to the CAISO Tariff, the CAISO has assumed responsibility for conducting all Interconnection Studies for Large Generating Facilities that connect to the CAISO Controlled Grid. The CAISO will conduct a stakeholder meeting on **July 27, 2006, from 1:00 p.m. to 5:00 p.m. at the California ISO offices in Folsom** to provide an overview and open discussion of the centralized Large Generating Facility Interconnection Study procedures.

Main Text:

Effective June 23, 2006, as filed under Appendix U to the CAISO Tariff, the CAISO has assumed responsibility for:

1) Conducting all Interconnection Studies for Large Generating Facilities (those greater than 20 MW) that connect to the CAISO Controlled Grid, and

2) Establishing Interconnection Study agreements directly with Interconnection Customers.

Accordingly, the CAISO will coordinate all aspects of the Large Generating Facility Interconnection Study processes for Interconnection Customers with proposed facilities greater than 20 MW that connect to the CAISO Controlled Grid. All deposits required by the CAISO Tariff for services involved with the Large Generating Facility Interconnection Study processes should be made payable to the CAISO. Additionally, Interconnection Study agreements for Large Generators will be between the CAISO and the Interconnected Customer, rather than between the interconnecting Participating Transmission Owner and Interconnection Customer.

The Centralized Generator Interconnection Procedures (Appendix U to the CAISO Tariff) are located on the CAISO website at <http://www.caiso.com/17c1/17c1d5e21bd60.pdf>. This document contains Appendices F through Y.

Meeting Details
The CAISO will hold a stakeholder meeting on **July 27, 2006, from 1:00 p.m. to 5:00 p.m. at the California ISO offices in Folsom,** to provide an overview of the May 24, 2006 FERC order concerning the centralized Large

Generator Interconnection Study Procedures and the Large Generating Facility Interconnection Study services the CAISO will be providing as a result of the FERC order.

Stakeholders may send questions to Tom French, Manager of Grid Assets, at tfrench@caiso.com <mailto:tfrench@caiso.com> by close of business on July 13, 2006 for CAISO response at the July 27th meeting.

For More Information Contact:

Information on Meeting Arrangements: Linda Wright, lwright@caiso.com <mailto:lwright@caiso.com>
Technical Information: Judy Nickel, jnickel@caiso.com <mailto:jnickel@caiso.com>

The California ISO strives to be a world-class electric transmission organization built around a globally recognized and inspired team providing cost-effective and reliable service, well-balanced energy market mechanisms, and high-quality information for the benefit of our customers.

EA/ComPR/IPS/ds

ATTACHMENT 73B
Email: RE CEC Data Request from
Abraham Alemu to Judy Nickel

Karen S. Chmielewski

From: Alemu, Abraham [AALemu@ci.vernon.ca.us]
Sent: Tuesday, May 15, 2007 3:38 PM
To: Nickel, Judy; Kondo, Teri
Cc: O'Callaghan, Donal; Stephen S. Miller; VPP File; Zhang, Yi; Alemu, Abraham
Subject: RE: CEC Data Request

Judy,
Please release the current 610 MW facilities study result. Pending official notification of the need for re-study and completion of the re-study, we wish to supply the best available information to the CEC and other parties. On a related matter, would you please respond to the other requests I outlined in my last e-mail: receipt of the completed 304 MW facilities study agreement (with study deposit)and date for a scoping meeting, and a pro-forma example of the preliminary approval letter. Thank you.

-----Original Message-----
From: Nickel, Judy [mailto:JNickel@caiso.com]
Sent: Monday, May 14, 2007 4:04 PM
To: Kondo, Teri
Cc: Alemu, Abraham; O'Callaghan, Donal; Miller, Stephen; VPP File; Zhang, Yi
Subject: RE: CEC Data Request

Thanks.

Judy Nickel
Project Manager
California ISO
(916) 608-7062

-----Original Message-----
From: Teri.Kondo@sce.com [mailto:Teri.Kondo@sce.com]
Sent: Monday, May 14, 2007 4:00 PM
To: Nickel, Judy
Cc: Alemu, Abraham; O'Callaghan, Donal; Miller, Stephen; VPP File; Zhang, Yi
Subject: RE: CEC Data Request

Judy,
Regarding your last statement, SCE has been holding up the Facilities Study completion on the 610 MW as a result of the withdrawn project. We were planning on incorporating the comments in the revised Facilities Study (after completion of the SIS restudy), unless Vernon and the ISO want SCE to complete the existing Facilities Study (which would no longer be valid).

Teri Kondo
Southern California Edison Company
T&D Regulatory Policy and Contracts
Phone: (626) 302-8703/ PAX 28703
Fax: (626) 302-1152/ 21152

"Nickel, Judy"

<JNickel@caiso.co

m>

To

"Alemu, Abraham"

05/14/2007 03:19 PM

<aalemu@ci.vernon.ca.us>

cc

"O'Callaghan, Donal" <docallaghan@ci.vernon.ca.us>, "VPP File" <vppdoccntrl@ci.vernon.ca.us>, "Miller, Stephen" <ssmiller@cai-engr.com>, "Zhang, Yi" <YZhang@caiso.com>, "Alemu, Abraham" <aalemu@ci.vernon.ca.us>, "Kondo, Teri" <teri.kondo@sce.com>

Subject

RE: CEC Data Request

Abraham:
You are correct. We are working with SCE to prepare a notification to all projects affected by the recent withdrawal of a higher queued project.
SCE is still reviewing Vernon's comments to the draft Facilities Study therefore the final version has not been issued.

Judy Nickel
Project Manager
California ISO
(916) 608-7062

From: Alemu, Abraham [mailto:AALemu@ci.vernon.ca.us]
Sent: Wednesday, May 09, 2007 10:57 AM
To: Nickel, Judy
Cc: O'Callaghan, Donal; VPP File; Miller, Stephen; Zhang, Yi; Alemu, Abraham
Subject: RE: CEC Data Request

Judy:
Vernon has not received any communication from the ISO indicating that there was a need for a re-study of our interconnection request.

1. Please clarify what re-study you are referring to. Is the re-study necessitated by projects leaving the queue? If the re-study is caused by projects leaving the queue, which projects are they and why does ISO believe they impact Vernon's study results?
2. On April 26 Vernon returned to the ISO a completed facilities study agreement for the

304 MW expansion project with the required study deposit.
To date, Vernon has not received confirmation of receipt from the ISO.
Also, Vernon has not been notified of a scoping meeting for the facilities study. Please confirm receipt of the completed facilities study agreement with the required study deposit and let us know of a date for the scoping meeting.
3. ISO has not released the final Facilities Study Report for the 610 MW request. When do you plan to release the report?
4. Finally, can you please describe the process for obtaining preliminary and final approval letters? Is this process outlined in the LGIP or somewhere else? Please send me a pro-forma example of the preliminary approval letter you discussed below. We would like to see what it looks like. Given that interconnection studies and agreements are now accomplished under ISO control and approval, we are surprised that ISO is maintaining the preliminary and final approval letter concept Thank you.

-----Original Message-----
From: Nickel, Judy [mailto:JNickel@caiso.com]
Sent: Tuesday, May 08, 2007 1:31 PM
To: Alemu, Abraham
Cc: O'Callaghan, Donal; VPP File; Miller, Stephen; Alemu, Abraham; Zhang, Yi; Kondo, Teri
Subject: RE: CEC Data Request
Abraham:
Preliminary approval letters will be held until the completion of the re-study.

Judy

-----Original Message-----
From: Alemu, Abraham [mailto:AALemu@ci.vernon.ca.us]
Sent: Monday, May 07, 2007 9:30 AM
To: Nickel, Judy
Cc: O'Callaghan, Donal; VPP File; Miller, Stephen; Alemu, Abraham
Subject: CEC Data Request

Judy,

The California Energy Commission (CEC) has raised a question about ISO procedures and we are seeking ISO input. The CEC Data Request and background provided is as follows:

BACKGROUND
The interconnection of the VPP requires CAISO review and concurrence or approval of the SIS and Facility Study. The CAISO review letter is required to provide study validation and final approval of the proposed interconnection and any necessary mitigation measures.

DATA REQUEST

73. Provide the CAISO preliminary and/or final interconnection approval letter(s).

In response to a previous Data Request we responded that:

"The System Impact Study and the subsequent Facilities Study will be the basis for an Interconnection Agreement which is a contract including all the facilities that will be required for the applicant to interconnect to the grid. The CAISO/SCE System Impact Study is the "report or letter" documenting the grid

facilities needed to describe the facilities required to interconnect the Vernon Power Plant."

It is our understanding that since the implementation of the Large Generator Interconnection Procedure (LGIP), ISO directs and approves interconnection studies. We believe that issuance of a Final System Impact Study, a Final Facilities Study or an Interconnection Agreement now inherently includes ISO approval. We believe that CEC's question may be based on the procedures that existed prior to the implementation of the LGIP.

So that we may answer the CEC please confirm our understanding. Alternately, if ISO is still providing preliminary and/or final interconnection approval letters please provide us with these as appropriate or provide us with the requirements and schedule for obtaining these.

Abraham Alemu
City of Vernon
4305 Santa Fe Avenue
Vernon, CA 90058
Office: (323) 583-8811 ext. 250
Cell: (323) 383 - 5695
Fax: (323) 826 - 1425
e-mail: aalemu@ci.vernon.ca.us

74. Please provide an environmental assessment of any new transmission facilities and / or reconductoring selected as mitigation measures that require construction outside of existing substations.

Response: Based on the System Impact Studies and Facility Studies completed to date, the addition of VPP does not require any new transmission facilities, conductor replacement, or modification of any other facilities outside of existing substations.

Below is a list of the information that VPP needs to address for Staff's analysis of the potential impacts of any future transmission facilities and / or reconductoring associated with the VPP project:

A) The location, rating and age of the line.

B) A basic, layperson's discussion of the reconductoring process for the line, identifying the techniques used, equipment required, vehicles (land and air), personnel required, parking and staging areas needed, and time needed to complete the reconductoring. This shall include:

- Candidate locations (if available) and average acreage needed for tension and pulling stations, or, alternatively, the approximate number of pulling and tension sites and the average acreage per site.
- Stringing method (slack or tension)
- Need for reel or other storage near the lines.
- Method and access (cherry picker, climbing tower, etc) to unclip the old conductor, install sheaves, and clip in the new conductor and "tension" lines.
- General methodology for any needed tree trimming and brush clearing.

C) How access to the line and towers would be accomplished, including identifying any existing or needed access road to pull sites and staging areas.

D) If known, the location of any tower that would need to be modified or replaced, a basic description of the work that would be done to the tower, and a description of the potential impacts of that work.

E) Identity of any substations that will be added or expanded as a result of the reconductoring.

F) Recent aerial photographs (less than 5 years old) and topographic maps of the applicable line segments (i.e., the segments that would be replaced) with the transmission towers plotted on the photographs.

G) Identification of any sensitive habitats along the route by examining aerial photographs, conducting site visits, searching available databases (such as the Natural Diversity Database) and literature searches, etc.

H) Legible map(s) depicting biological resources (habitat, nesting areas, etc.) within 500 feet of the outside edges of the right of way for the transmission line corridor.

I) Identification of known cultural resource sites within ½ mile of the route based on a California Historic Resource Information System literature search and contact with the Native American Heritage Commission. This information should be provided as a legible map depicting the cultural sites, and must be submitted under confidential cover.

J) If any portion of the line is more than 45 years old, describe modifications/upgrades, if any, that have been made previously and provide any information indicative of the historic significance of the existing transmission line segment to be reconductored.

K) If an existing substation needs to be modified as a result of the proposed project, and it is more than 45 years old, describe modifications/upgrades, if any, that have been made previously, and provide any information indicative of the historic significance of the existing substation.

L) Legible map(s) showing existing land uses within 500 feet of the outside edges of the right of way, including identification of any school, hospital, daycare center, other sensitive receptors, and residential and commercial areas.

M) Identification of any potentially significant impact to the environment that may occur as the result of the reconductoring, construction technologies that are available to mitigate an impact, and mitigation measures that would reduce the impact to a less than significant level, including the standard environmental mitigation measures developed generically by the transmission owner and/or the CPUC for reconductoring projects.

N) Identity of any agency or other interested party with jurisdiction or permit approval authority over any part of the reconductoring project.

O) In general, provide facts to support conclusions about the potential for impacts and feasible mitigation, including impact avoidance measures.

BEFORE THE ENERGY RESOURCES CONSERVATION AND DEVELOPMENT COMMISSION OF THE STATE OF CALIFORNIA

APPLICATION FOR CERTIFICATION FOR THE VERNON POWER PLANT PROJECT BY THE CITY OF VERNON	**DOCKET NO. 06-AFC-4** **PROOF OF SERVICE LIST** **(REVISED 5/1/2007)**

INSTRUCTIONS: All parties shall (1) file a printed, original signed document plus 12 copies OR file one original signed document and e-mail the document to the Docket address below, AND (2) all parties shall also send a printed OR electronic copy of the document, plus a proof of service declaration, to each of the entities and individuals on the proof of service list:

CALIFORNIA ENERGY COMMISSION
Attn: DOCKET NO. 06-AFC-4
1516 Ninth Street, MS-4
Sacramento, CA 95814-5512
docket@energy.state.ca.us

APPLICANT
Donal O'Callaghan
Director of Light & Power
City of Vernon
4305 So. Santa Fe Avenue
Vernon, CA 90058
docallaghan@ci.vernon.ca.us
rtoering@ci.vernon.ca.us
e.fresch@sbcglobal.net

John Carrier, CH2M Hill
Environmental Consultant
2485 Natomas Park Dr., #600
Sacramento, CA 95833-2937
john.carrier@ch2m.com

COUNSEL FOR APPLICANT
Jeff A. Harrison, City Attorney
City of Vernon
4305 So. Santa Fe Avenue
Vernon, CA 90058
jharrison@ci.vernon.ca.us
jharrison@karnskarabian.com

Michael Carroll, Counsel for Vernon
Latham & Watkins
650 Town Center Drive, 20th Floor
Costa Mesa, California 92626-1925
michael.carroll@lw.com

John Karns, Counsel for Vernon
Karns & Karabian
900 Wilshire Boulevard, Suite 530
Los Angeles, California 90017
jkarns@karnskarabian.com

INTERESTED AGENCIES
City of Huntington Park
Att: Albert Fontanez, Asst Planner
6550 Miles Avenue
Huntington Park, CA 90255
afontanez@huntingtonpark.org

City of Maywood
Att: Felipe Aguirre & Edward Ahrens
4319 E. Slauson Ave
Maywood Ca 90270
faguirre@cityofmaywood.com
eahrens@cityofmaywood.com

Electricity Oversight Board
Att: Eric Saltmarsh
770 L Street, Suite 1250
Sacramento, CA 95814
esaltmarsh@eob.ca.gov

***Yolanda Garza, Unit Chief**
Permitting and Corrective Action Branch
Department of Toxic Substances Control
1011 N. Grandview Street
Glendale, CA 91201
ygarza@dtsc.ca.gov

***Christine Bucklin, P.G.**
Senior Engineering Geologist
Department of Toxic Substances Control
1011 N. Grandview Street
Glendale, CA 91201
cbucklin@dtsc.ca.gov

John Yee & Chandrashekhar Bhatt
South Coast Air Quality Mgmt. District
21865 E. Copley Drive
Diamond Bar, CA 91765-4182
jyee@aqmd.gov
cbhatt@aqmd.gov

City of Los Angeles
Jennifer Pinkerton
Environmental Affairs Department
200 N. Spring St., Rm. 2005, MS 177
Los Angeles, CA 90012
Jennifer.Pinkerton@lacity.org

INTERVENORS

California Unions for Reliable Energy
Marc D. Joseph & Gloria D. Smith
Adams Broadwell Joseph & Cardozo
601 Gateway Blvd., Suite 1000
South San Francisco, California 94080
gsmith@adamsbroadwell.com
mdjoseph@adamsbroadwell.com

Communities for a Better Environment
Bahram Fazeli
5610 Pacific Boulevard, Suite 203
Huntington Park CA 90255
bfazeli@cbecal.org

Communities for a Better Environment
Shana Lazerow & Philip Huang
1440 Broadway, Suite 701
Oakland, CA 94612
phuang@cbecal.org

ENERGY COMMISSION

Jackalyne Pfannenstiel, Chair
Presiding Committee Member
jpfannen@energy.state.ca.us
cgraber@energy.state.ca.us

James D. Boyd, Commissioner
Associate Committee Member
jboyd@energy.state.ca.us

Susan Gefter
Hearing Officer
sgefter@energy.state.ca.us

James W. Reede, Jr., Ed.D
Siting Project Manager
jreede@energy.state.ca.us

Kenneth Celli
Staff Attorney
kcelli@energy.state.ca.us

Public Adviser
pao@energy.state.ca.us

DECLARATION OF SERVICE

I, Jeannette Harris, declare that on May 24, 2007, I deposited the required copies of the attached Data Response, Set 3A filed for Vernon Power Plant Project (06-AFC-4) in the United States mail at Sacramento, California with first-class postage thereon fully prepaid and addressed to those identified on the Proof of Service list above. I declare under penalty of perjury that the foregoing is true and correct.

OR

Transmission via electronic mail was consistent with the requirements of California Code of Regulations, title 20, sections 1209, 1209.5, and 1210. All electronic copies were sent to all those identified on the Proof of Service list above.

I declare under penalty of perjury that the foregoing is true and correct.

Jeannette Harris

Jeannette Harris/CH2M HILL

CALIFORNIA
ENERGY
COMMISSION

1516 Ninth Street
Sacramento, CA 95825-5512
800-822-6228
www.energy.ca.gov

ELECTRONIC PROOF OF SERVICE LIST
Revised 5/1/07

Vernon Power Plant Project
APPLICATION FOR CERTIFICATION,
DOCKET NO. 06-AFC-4

docket@energy.state.ca.us	Energy Commission Docket Unit
jpfannen@energy.state.ca.us	Chairman Jackalyne Pfannenstiel
cgraber@energy.state.ca.us	Cathy Graber
jboyd@energy.state.ca.us	Commissioner James Boyd
pao@energy.state.ca.us	Margaret J. Kim, Public Adviser
sgefter@energy.state.ca.us	Susan Gefter, Hearing Officer
Jreede@energy.state.ca.us	James Reede. Jr., Project Manager
kcelli@energy.state.ca.us	Kenneth Celli, Staff Counsel
docallaghan@ci.vernon.ca.us	Donal O'Callaghan, Director of Light and Power
rtoering@ci.vernon.ca.us	Robert Toering, City of Vernon
jharrison@ci.vernon.ca.us	Jeff A. Harrison, Acting City Attorney
Michael.Carroll@lw.com	Michael Carroll, Counsel for Applicant
emily.taylor@lw.com	Emily Taylor, Counsel for Applicant
jkarns@karnskarabian.com	John Karns, Counsel for Applicant
esaltmarsh@eob.ca.gov	Electricity Oversight Board
afontanez@huntingtonpark.org	Albert Fontanez, Asst Planner, City of Huntington Park
faguirre@cityofmaywood.com	Felipe Aguirre , City of Maywood
eahrens@cityofmaywood.com	Edward Ahrens, City of Maywood
ygarza@dtsc.ca.gov	**Yolanda Garza, DTSC Unit Chief**
cbucklin@dtsc.ca.gov	**Christine Bucklin, DTSC Sr. Engineering Geologist**
jyee@aqmd.gov	John Yee, SCAQMD
cbhatt@aqmd.gov	Chandrashekhar Bhatt, SCAQMD
Jennifer.Pinkerton@lacity.org	Jennifer Pinkerton, City of Los Angeles
mdjoseph@adamsbroadwell.com	Marc D. Joseph, CURE
gsmith@adamsbroadwell.com	Gloria D. Smith , CURE
bfazeli@cbecal.org	Bahraim Fazeli, CBE
slazerow@cbecal.org	Shana Lazerow, CBE
phuang@cbecal.org	Philip Huang, CBE

I declare that transmission via electronic mail was consistent with the requirements of California Code of Regulations, title 20, sections 1209, 1209.5, and 1210. All electronic copies were sent to all those identified on the Proof of Service list above. I declare under penalty of perjury that the foregoing is true and correct.

John L. Carrier, J.D.
Program Manager