Appendix D

Steady State Power Flow Plots

Panoche Energy Center SIR Power Flow Plots

Plot	Description
Plot #1	2010 Summer Peak Normal Conditions – Pre-Project (MW/MVAr)
Plot #2	2010 Summer Peak Normal Conditions – Pre-Project (Amps/% Rate)
Plot #3	2010 Summer Peak Normal Conditions – Post-Project (MW/MVAr)
Plot #4	2010 Summer Peak Normal Conditions – Post-Project (Amps/% Rate)
Plot #5	2010 Spring Peak Normal Conditions – Pre-Project (MW/MVAr)
Plot #6	2010 Spring Peak Normal Conditions – Pre-Project (Amps/% Rate)
Plot #7	2010 Spring Peak Normal Conditions – Post-Project (MW/MVAr)
Plot #8	2010 Spring Peak Normal Conditions – Post-Project (Amps/% Rate)
Plot #9	2010 Summer Off peak Normal Conditions – Pre-Project (MW/MVAr)
Plot #10	2010 Summer Off peak Normal Conditions – Pre-Project (Amps/% Rate)
Plot #11	2010 Summer Off peak Normal Conditions – Post-Project (MW/MVAr)
Plot #12	2010 Summer Off peak Normal Conditions – Post-Project (Amps/% Rate)
Plot #13	2010 Summer Peak Pre-Project: Wilson – Borden 230 kV Line and Melones 1 Outage (MW/MVAr)
Plot #14	2010 Summer Peak Pre-Project: Wilson – Borden 230 kV Line and Melones 1 Outage (Amps/% Rate)
Plot #15	2010 Summer Peak Post-Project: Wilson – Borden 230 kV Line and Melones 1 Outage (MW/MVAr)
Plot #16	2010 Summer Peak Post-Project: Wilson – Borden 230 kV Line and Melones 1 Outage (Amps/% Rate)

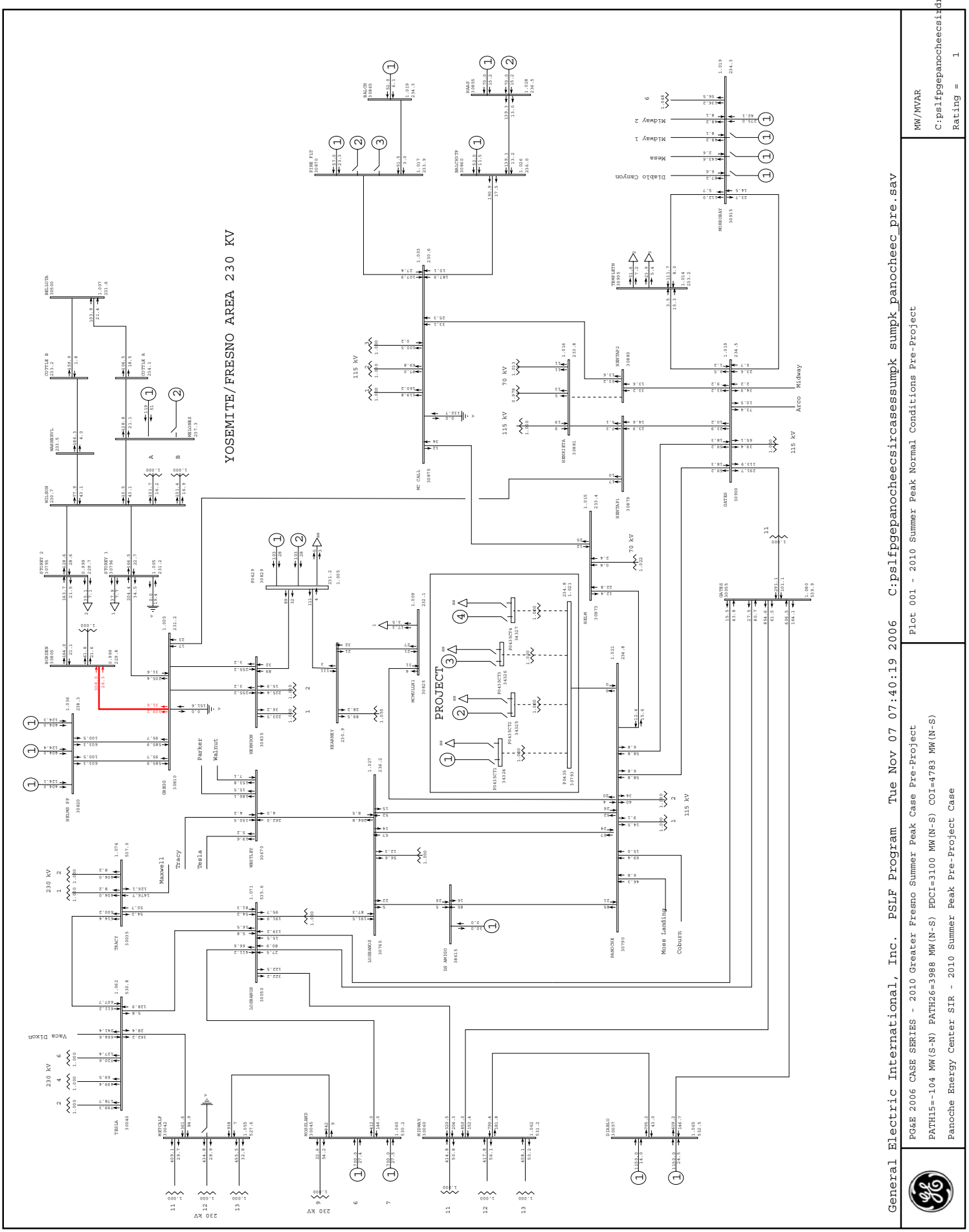
YOSEMITE/FRESNO AREA 230 KV
General Electric International, Inc. PSLF Program Tue Nov 07 07:40:19 2006 C:pslfpgepanocheecsircasessumpk_sumpk_panochec_pre.sav
PG&E 2006 CASE SERIES - 2010 Greater Fresno Summer Peak Case Pre-Project
PATH15=-104 MW(S-N) PATH26=3988 MW(N-S) PDCI=3100 MW(N-S) COI=4783 MW(N-S)
Panoche Energy Center SIR - 2010 Summer Peak Pre-Project Case
Plot 001 - 2010 Summer Peak Normal Conditions Pre-Project
MW/MVAR
C:pslfpgepanocheecsircasesdrawpano
Rating = 1
PROJECT
115 kV
70 kV
230 kV
Parker
Walnut
Tracy
Tesla
Maxwell
Vaca Dixon
Moss Landing
Coburn
Atco
Midway
Mesa
Diablo Canyon
Mckittrick
Kearney
Herndon
Gregg
Wilson
Warnerval
Cottle A
Cottle B
Belotta
Melones
Storey 1
Storey 2
Bellen
Balch
Haas
Balcoftp
Dibble Fit
Mc Call
Herndon1
Herndon2
Herndon3
Mcmullin1
Nelm
Gates
Moserdale
Tesla
Metcalf
Moseland
Midway
Diablo
Tracy
Westley
Los Banos
Panoche
Dos Amigos
Kearney
Gregg
Herndon
Wilson
Warnerval
Melones
Storey 1
Storey 2
Bellen
Cottle A
Cottle B
Belotta
Balch
Haas
Dibble Fit
Balcoftp
Mc Call
Herndon1
Herndon2
Herndon3
Mcmullin1
Nelm
Gates
Moserdale
Metcalf

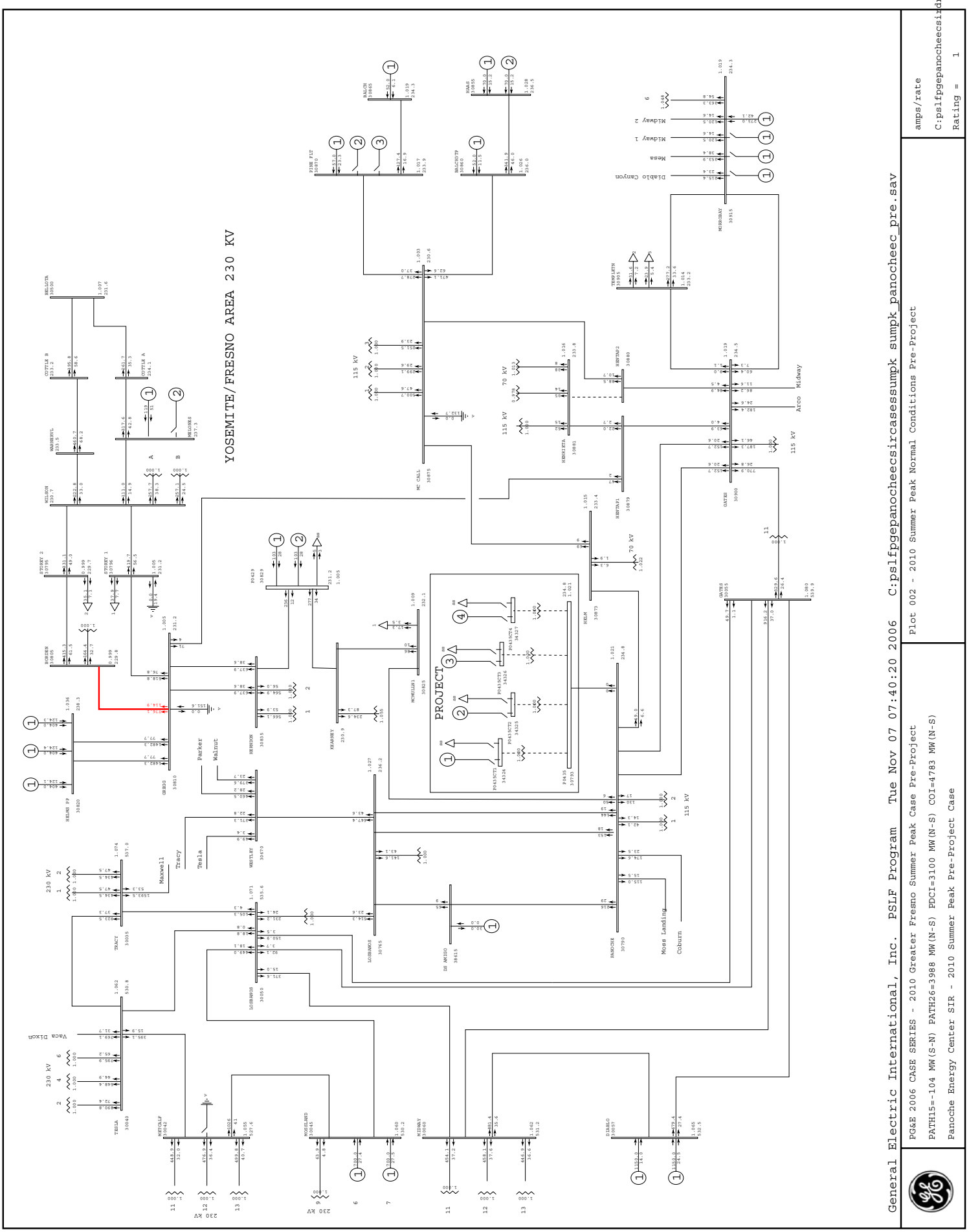
YOSEMITE/FRESNO AREA 230 KV
PROJECT
General Electric International, Inc. PSLF Program Tue Nov 07 07:40:20 2006 C:pslfpgepanocheecsircasessumpk sumpk_panocheec_pre.sav
PG&E 2006 CASE SERIES - 2010 Greater Fresno Summer Peak Case Pre-Project
PATH15=-104 MW(S-N) PATH26=3988 MW(N-S) PDCI=3100 MW(N-S) COI=4783 MW(N-S)
Panoche Energy Center SIR - 2010 Summer Peak Pre-Project Case
Plot 002 - 2010 Summer Peak Normal Conditions Pre-Project
amps/rate
C:pslfpgepanocheecsirdrawpano
Rating = 1

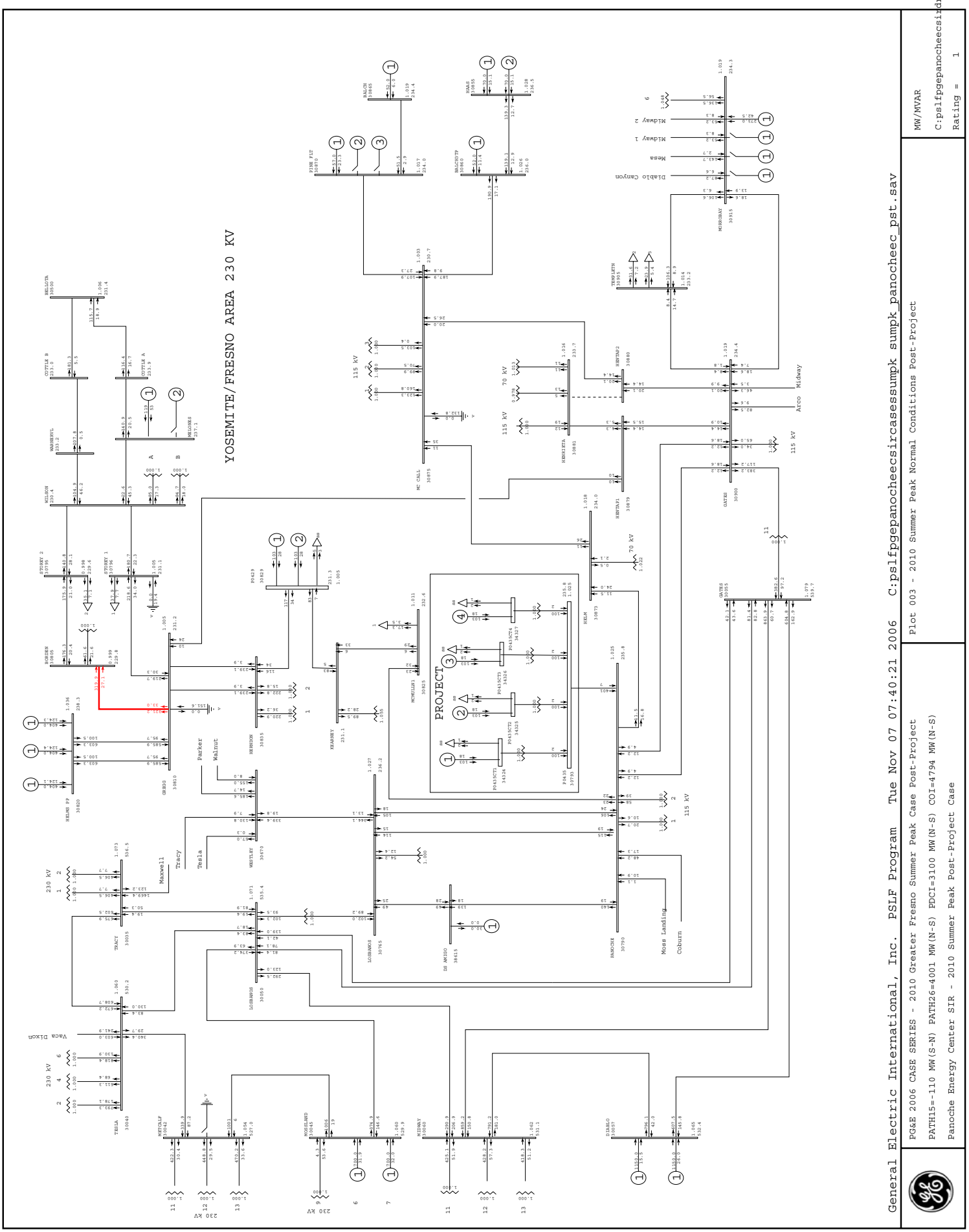
YOSEMITE/FRESNO AREA 230 KV
PROJECT
General Electric International, Inc. PSLF Program Tue Nov 07 07:40:21 2006 C:pslfpgepanocheecsircasessumpk sumpk_panocheec_pst.sav
PG&E 2006 CASE SERIES - 2010 Greater Fresno Summer Peak Case Post-Project
PATH15=-110 MW(S-N) PATH26=4001 MW(N-S) PDCI=3100 MW(N-S) COI=4794 MW(N-S)
Panoche Energy Center SIR - 2010 Summer Peak Post-Project Case
Plot 003 - 2010 Summer Peak Normal Conditions Post-Project
MW/MVAR
C:pslfpgepanocheecsircasessumpk sumpk_panocheec_pst.sav
Rating = 1

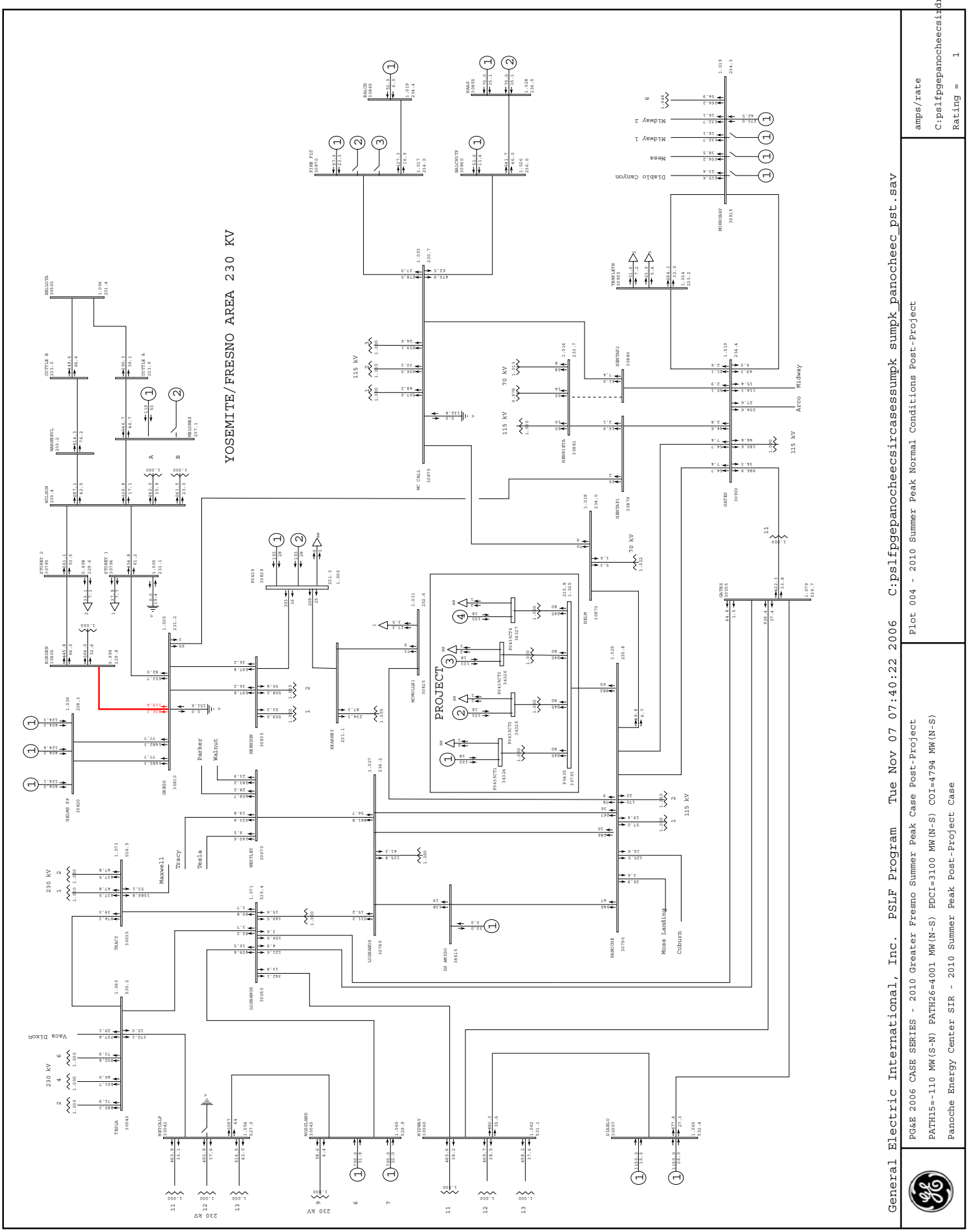
YOSEMITE/FRESNO AREA 230 KV
PROJECT
General Electric International, Inc. PSLF Program Tue Nov 07 07:40:22 2006 C:pslfpgepanocheecsircasessumpk sumpk_panocheec_pst.sav
PG&E 2006 CASE SERIES - 2010 Greater Fresno Summer Peak Case Post-Project
PATH15=-110 MW(S-N) PATH26=4001 MW(N-S) PDCI=3100 MW(N-S) COI=4794 MW(N-S)
Panoche Energy Center SIR - 2010 Summer Peak Post-Project Case
Plot 004 - 2010 Summer Peak Normal Conditions Post-Project
amps/rate
C:pslfpgepanocheecsirdrawpano
Rating = 1

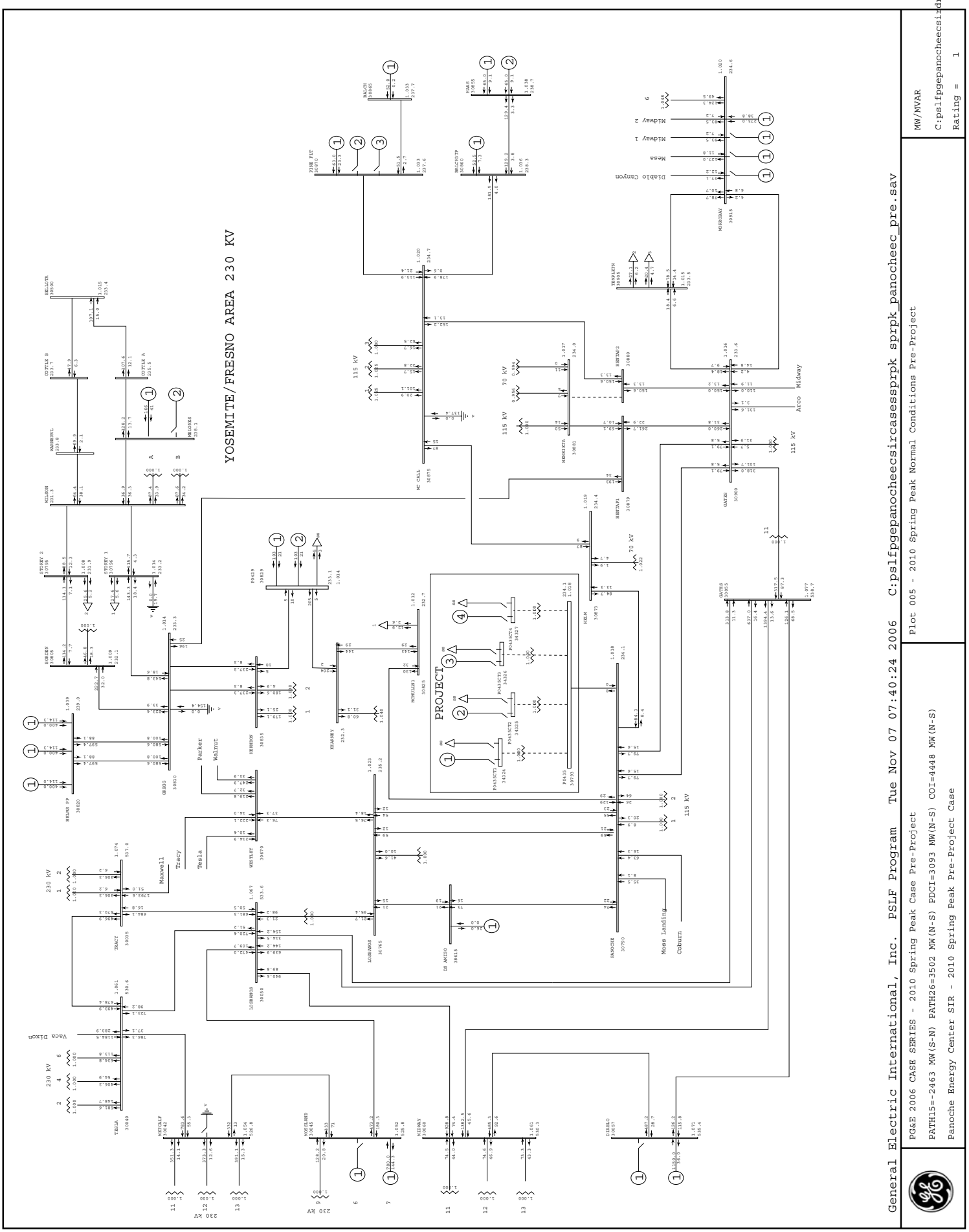
YOSEMITE/FRESNO AREA 230 KV
PROJECT
General Electric International, Inc. PSLF Program Tue Nov 07 07:40:24 2006 C:pslfpgepanocheecsircasessprpk sprpk_panocheec_pre.sav
PG&E 2006 CASE SERIES - 2010 Spring Peak Case Pre-Project
PATH15=-2463 MW(S-N) PATH26=3502 MW(N-S) PDCI=3093 MW(N-S) COI=4448 MW(N-S)
Panoche Energy Center SIR - 2010 Spring Peak Pre-Project Case
Plot 005 - 2010 Spring Peak Normal Conditions Pre-Project
MW/MVAR
C:pslfpgepanocheecsirdrawpano
Rating = 1

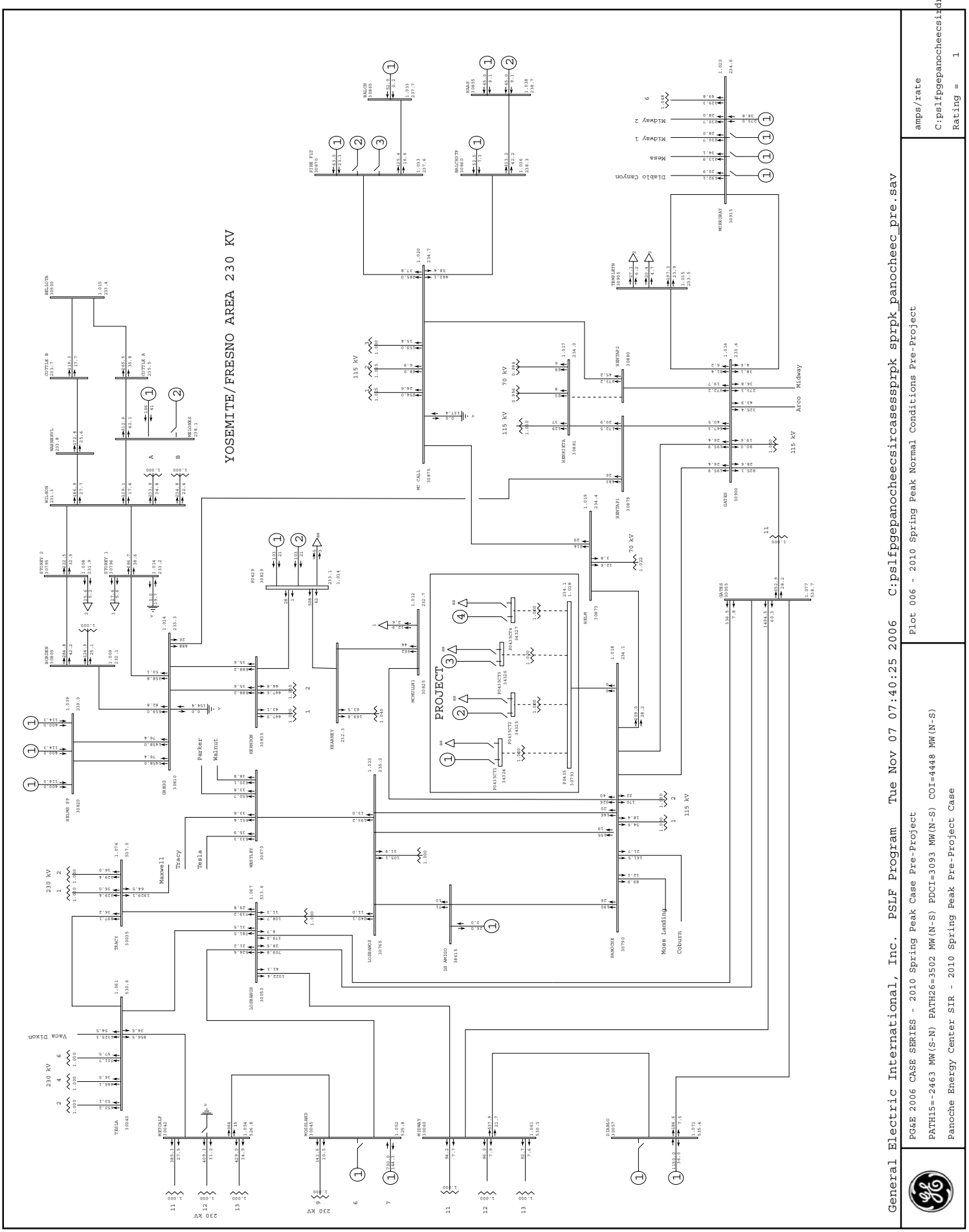
YOSEMITE/FRESNO AREA 230 KV
PROJECT
General Electric International, Inc. PSLF Program Tue Nov 07 07:40:25 2006 C:pslfpgepanocheecsircasessprpk sprpk_panocheec_pre.sav
PG&E 2006 CASE SERIES - 2010 Spring Peak Case Pre-Project
PATH15=-2463 MW(S-N) PATH26=3502 MW(N-S) PDCI=3093 MW(N-S) COI=4448 MW(N-S)
Panoche Energy Center SIR - 2010 Spring Peak Pre-Project Case
Plot 006 - 2010 Spring Peak Normal Conditions Pre-Project
amps/rate
C:pslfpgepanocheecsirdrawpano
Rating = 1

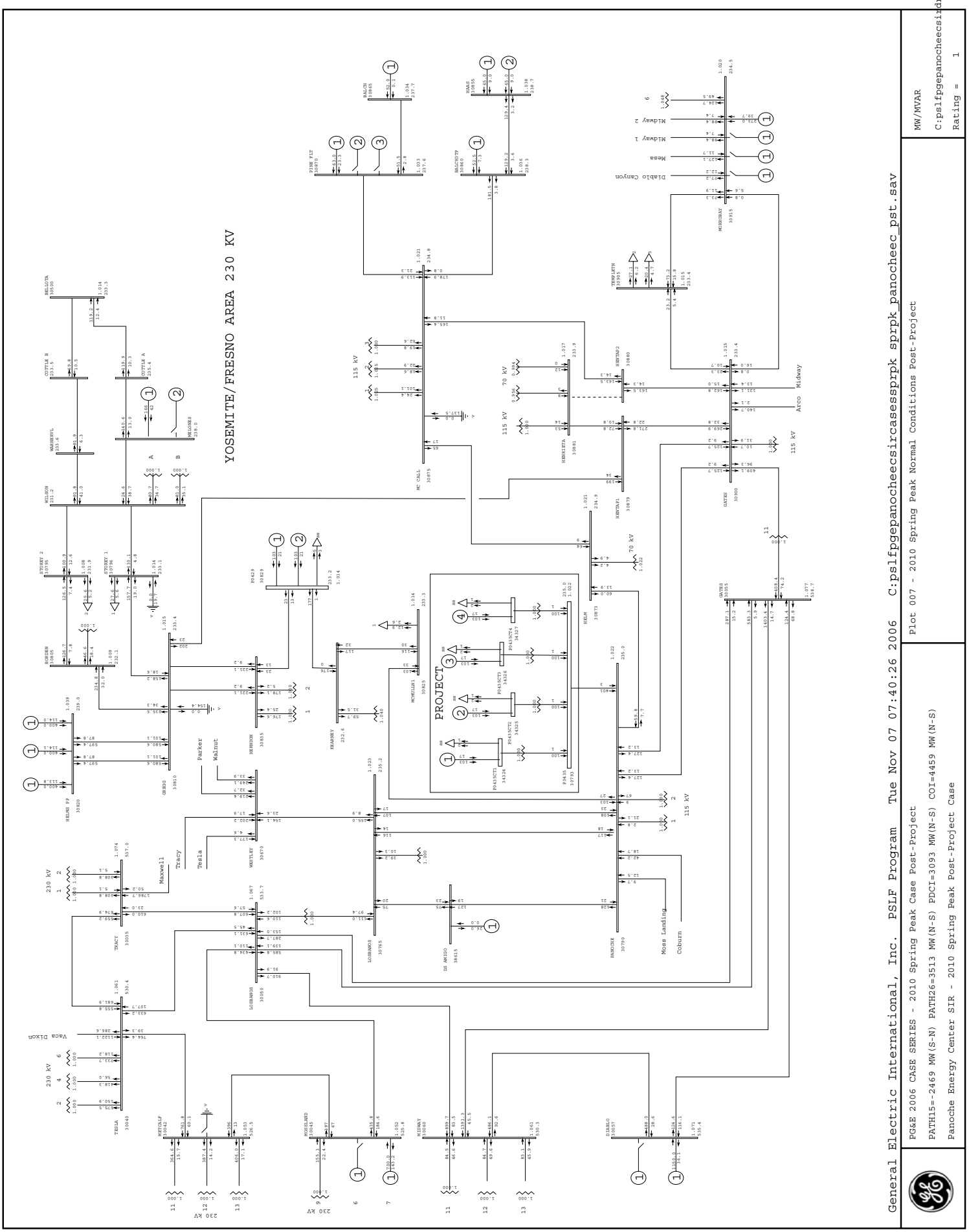
YOSEMITE/FRESNO AREA 230 KV
PROJECT
General Electric International, Inc. PSLF Program Tue Nov 07 07:40:26 2006 C:pslfpgepanocheecsircasessprpk sprpk_panocheec_pst.sav
PG&E 2006 CASE SERIES - 2010 Spring Peak Case Post-Project
PATH15=-2469 MW(S-N) PATH26=3513 MW(N-S) PDCI=3093 MW(N-S) COI=4459 MW(N-S)
Panoche Energy Center SIR - 2010 Spring Peak Post-Project Case
Plot 007 - 2010 Spring Peak Normal Conditions Post-Project
MW/MVAR
C:pslfpgepanocheecsirdrawpano
Rating = 1

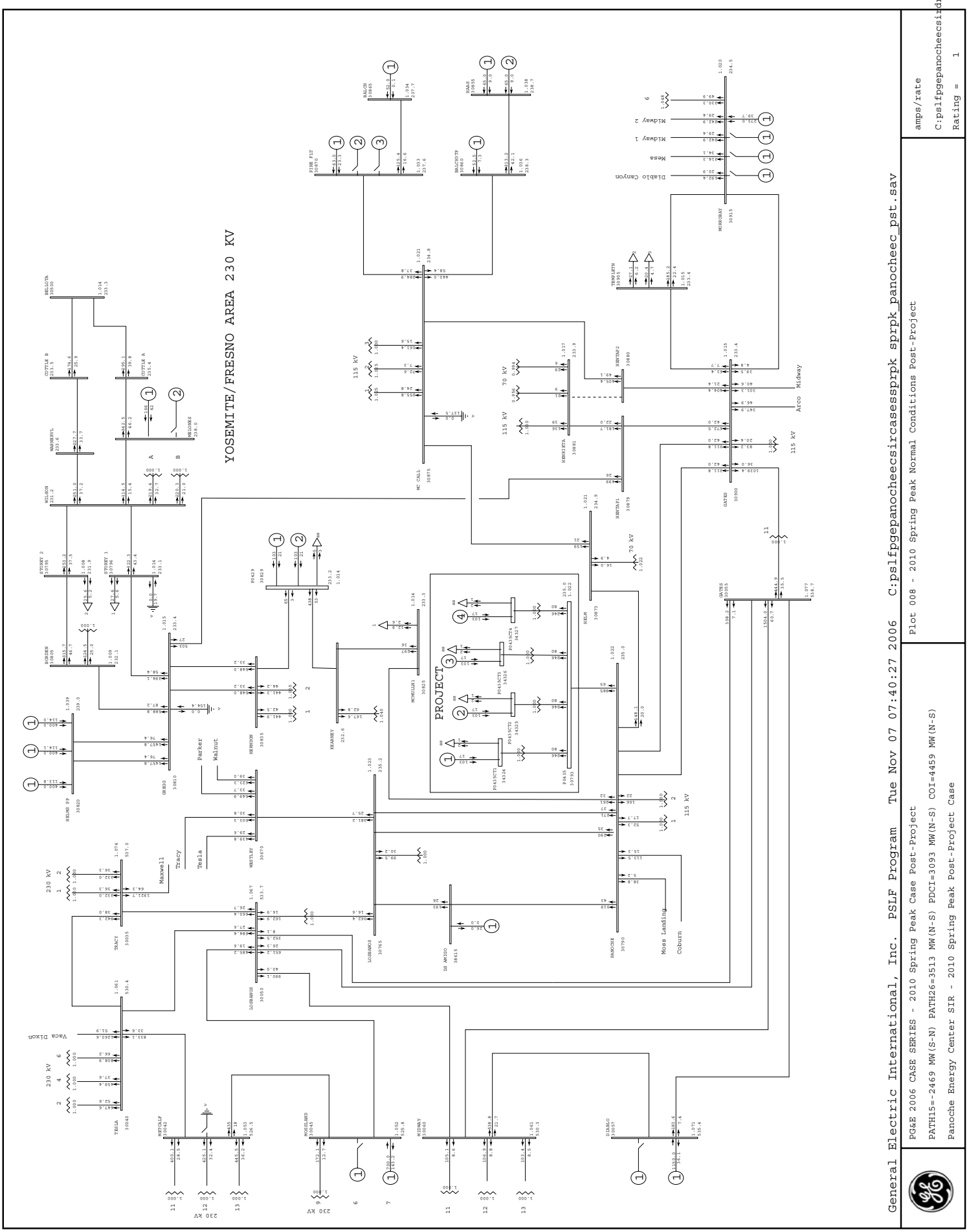
YOSEMITE/FRESNO AREA 230 KV
General Electric International, Inc. PSLF Program Tue Nov 07 07:40:27 2006 C:pslfpgepanocheecsircasessprpk sprpk_panochec_pst.sav
Plot 008 - 2010 Spring Peak Normal Conditions Post-Project
amps/rate
C:pslfpgepanocheecsirdrawpano
Rating = 1
PG&E 2006 CASE SERIES - 2010 Spring Peak Case Post-Project
PATH15=-2469 MW(S-N) PATH26=3513 MW(N-S) PDCI=3093 MW(N-S) COI=4459 MW(N-S)
Panoche Energy Center SIR - 2010 Spring Peak Post-Project Case
PROJECT
115 kV
70 kV
230 kV
Diablo Canyon
Mesa
Midway 1
Midway 2
Midway
Atco
Parker
Walnut
Tracy
Tesla
Maxwell
Vaca Dixon
Moss Landing
Coburn

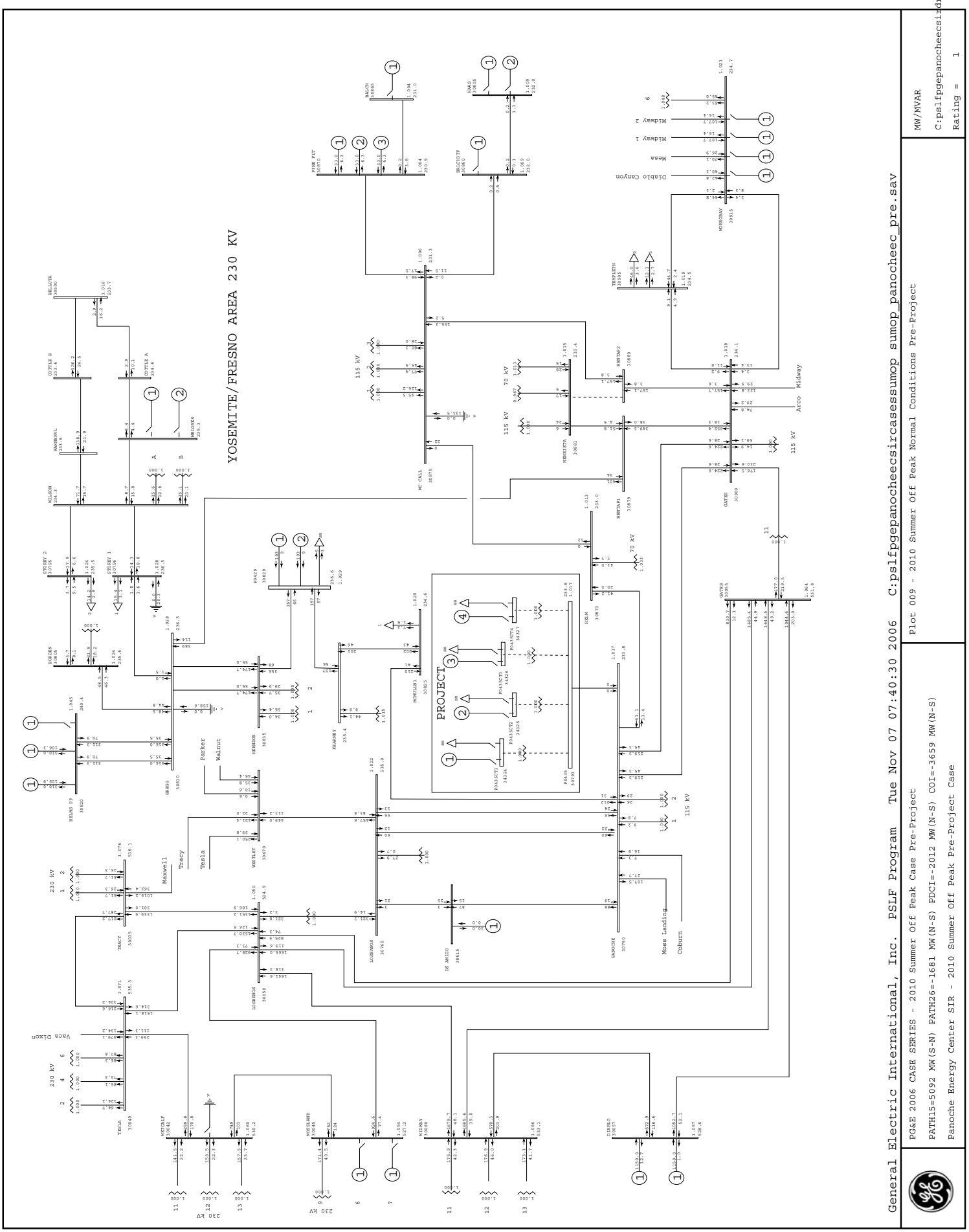
YOSEMITE/FRESNO AREA 230 KV
PROJECT
General Electric International, Inc. PSLF Program Tue Nov 07 07:40:30 2006 C:pslfpgepanocheecsircasessumop sumop_panocheec_pre.sav
PG&E 2006 CASE SERIES - 2010 Summer Off Peak Case Pre-Project
PATH15=5092 MW(S-N) PATH26=-1681 MW(N-S) PDCI=-2012 MW(N-S) COI=-3659 MW(N-S)
Panoche Energy Center SIR - 2010 Summer Off Peak Pre-Project Case
Plot 009 - 2010 Summer Off Peak Normal Conditions Pre-Project
MW/MVAR
C:pslfpgepanocheecsirdrawpano
Rating = 1

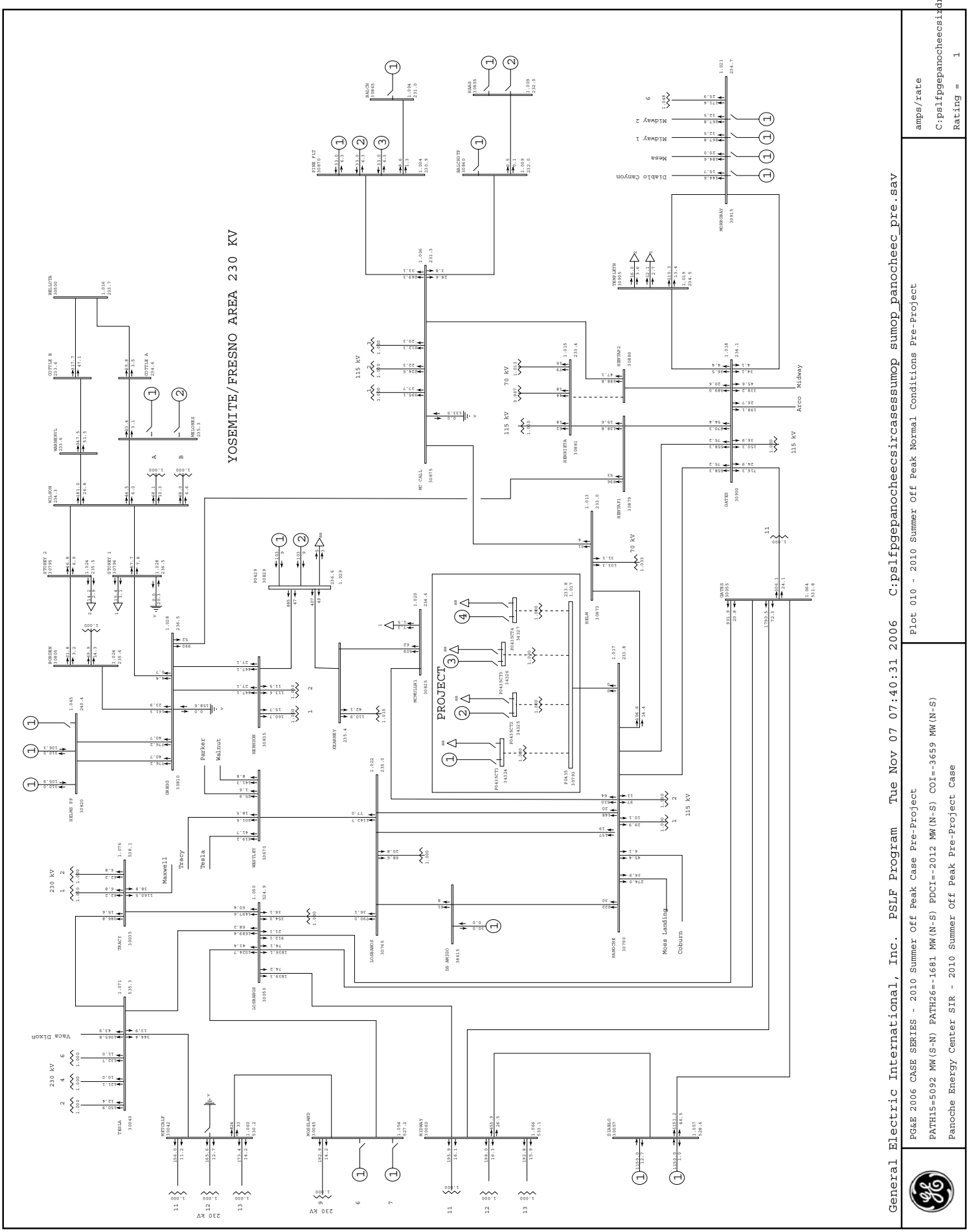
YOSEMITE/FRESNO AREA 230 KV
PROJECT
General Electric International, Inc. PSLF Program Tue Nov 07 07:40:31 2006 C:pslfpgepanocheecsircasessumop_sumop_panochec_pre.sav
PG&E 2006 CASE SERIES - 2010 Summer Off Peak Case Pre-Project
PATH15=5092 MW(S-N) PATH26=-1681 MW(N-S) PDCI=-2012 MW(N-S) COI=-3659 MW(N-S)
Panoche Energy Center SIR - 2010 Summer Off Peak Pre-Project Case
amps/rate
C:pslfpgepanocheecsircasesdrawpano
Rating = 1
Plot 010 - 2010 Summer Off Peak Normal Conditions Pre-Project

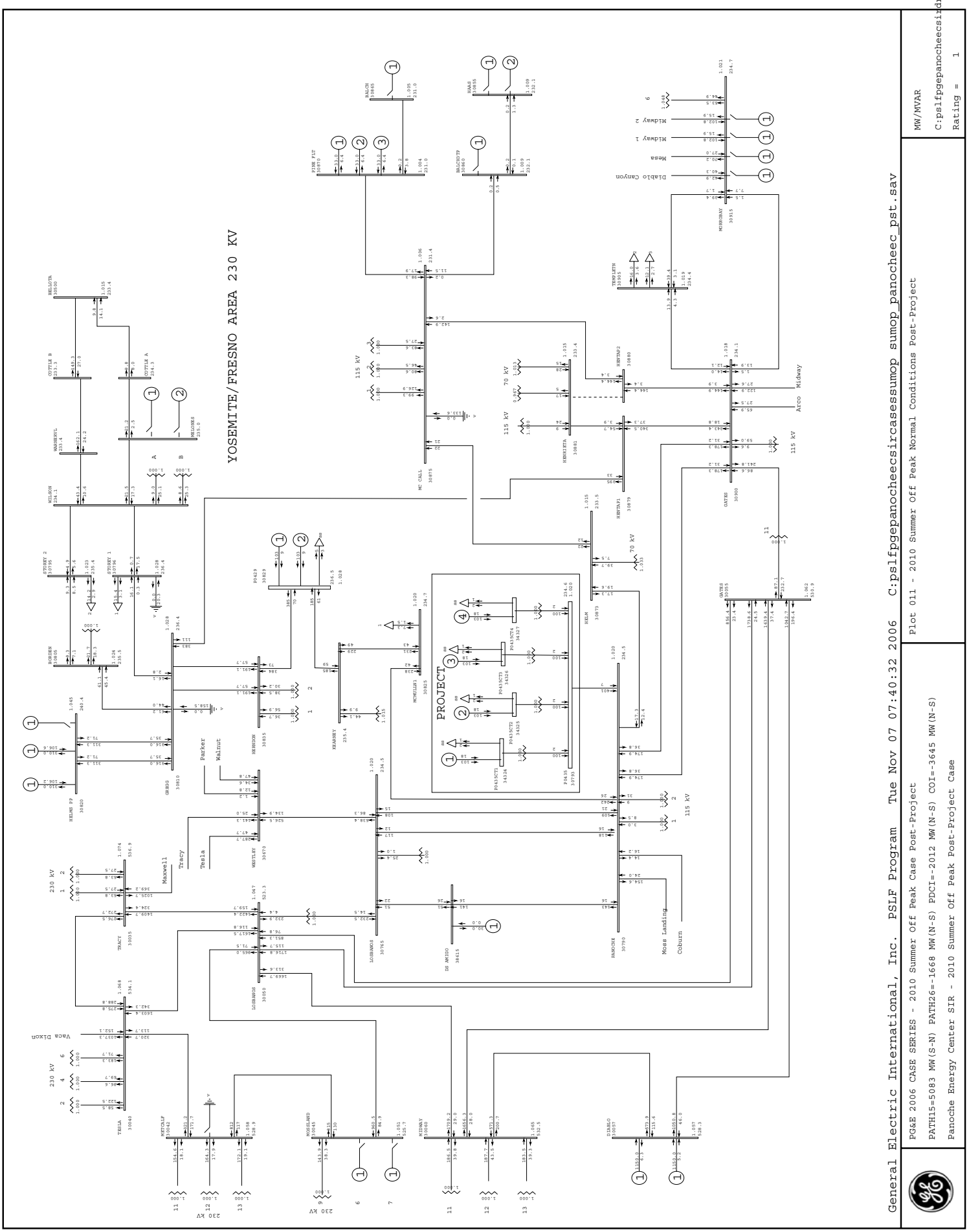
YOSEMITE/FRESNO AREA 230 KV
PROJECT
General Electric International, Inc. PSLF Program Tue Nov 07 07:40:32 2006 C:pslfpgepanocheecsircasessumop sumop_panocheec_pst.sav
PG&E 2006 CASE SERIES - 2010 Summer Off Peak Case Post-Project
PATH15=5083 MW(S-N) PATH26=-1668 MW(N-S) PDCI=-2012 MW(N-S) COI=-3645 MW(N-S)
Panoche Energy Center SIR - 2010 Summer Off Peak Post-Project Case
Plot 011 - 2010 Summer Off Peak Normal Conditions Post-Project
MW/MVAR
C:pslfpgepanocheecsirdrawpano
Rating = 1

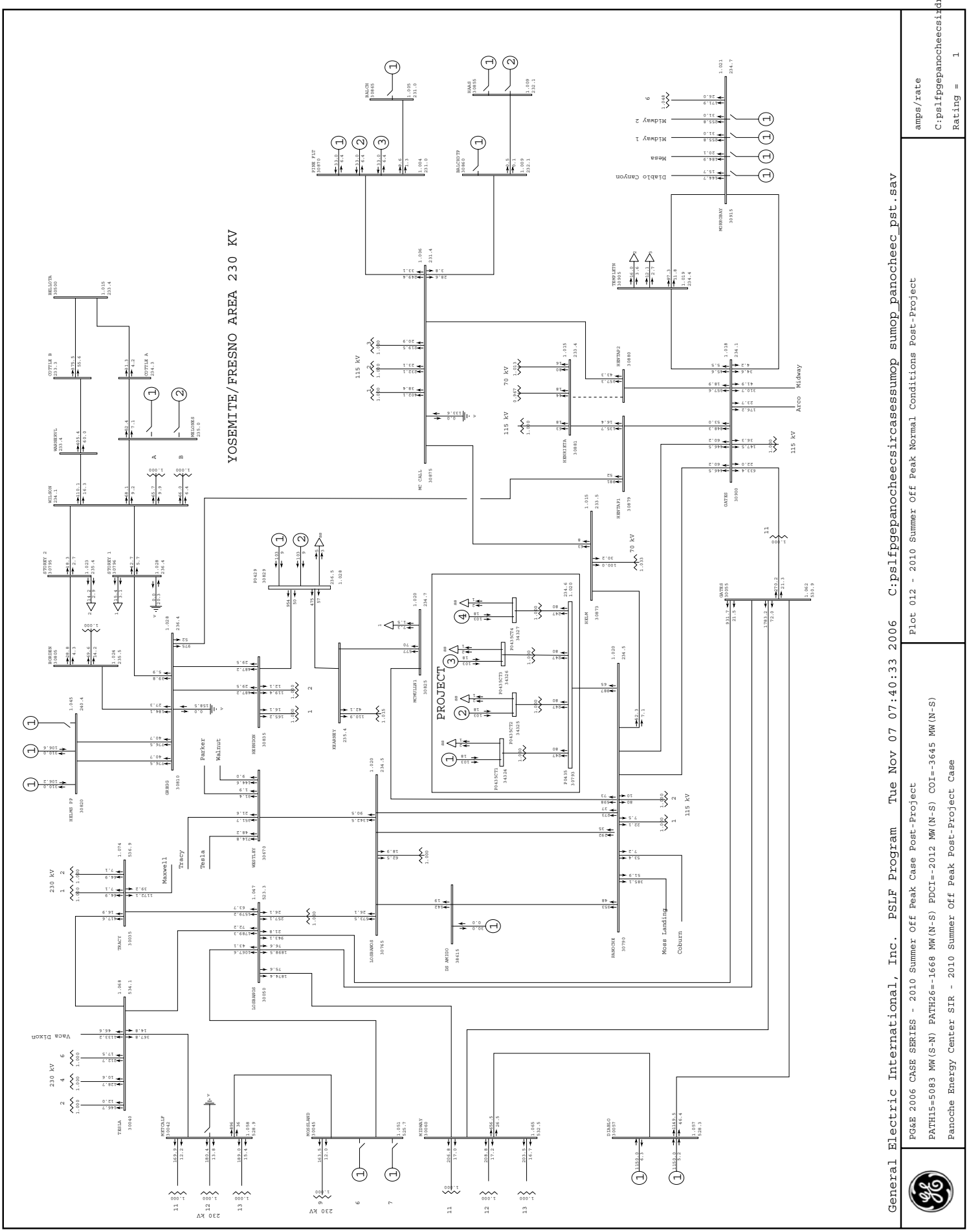
YOSEMITE/FRESNO AREA 230 KV
PROJECT
General Electric International, Inc. PSLF Program Tue Nov 07 07:40:33 2006 C:pslfpgepanocheecsircasessumop sumop_panocheec_pst.sav
PG&E 2006 CASE SERIES - 2010 Summer Off Peak Case Post-Project
PATH15=5083 MW(S-N) PATH26=-1668 MW(N-S) PDCI=-2012 MW(N-S) COI=-3645 MW(N-S)
Panoche Energy Center SIR - 2010 Summer Off Peak Post-Project Case
Plot 012 - 2010 Summer Off Peak Normal Conditions Post-Project
amps/rate
C:pslfpgepanocheecsirdrawpano
Rating = 1

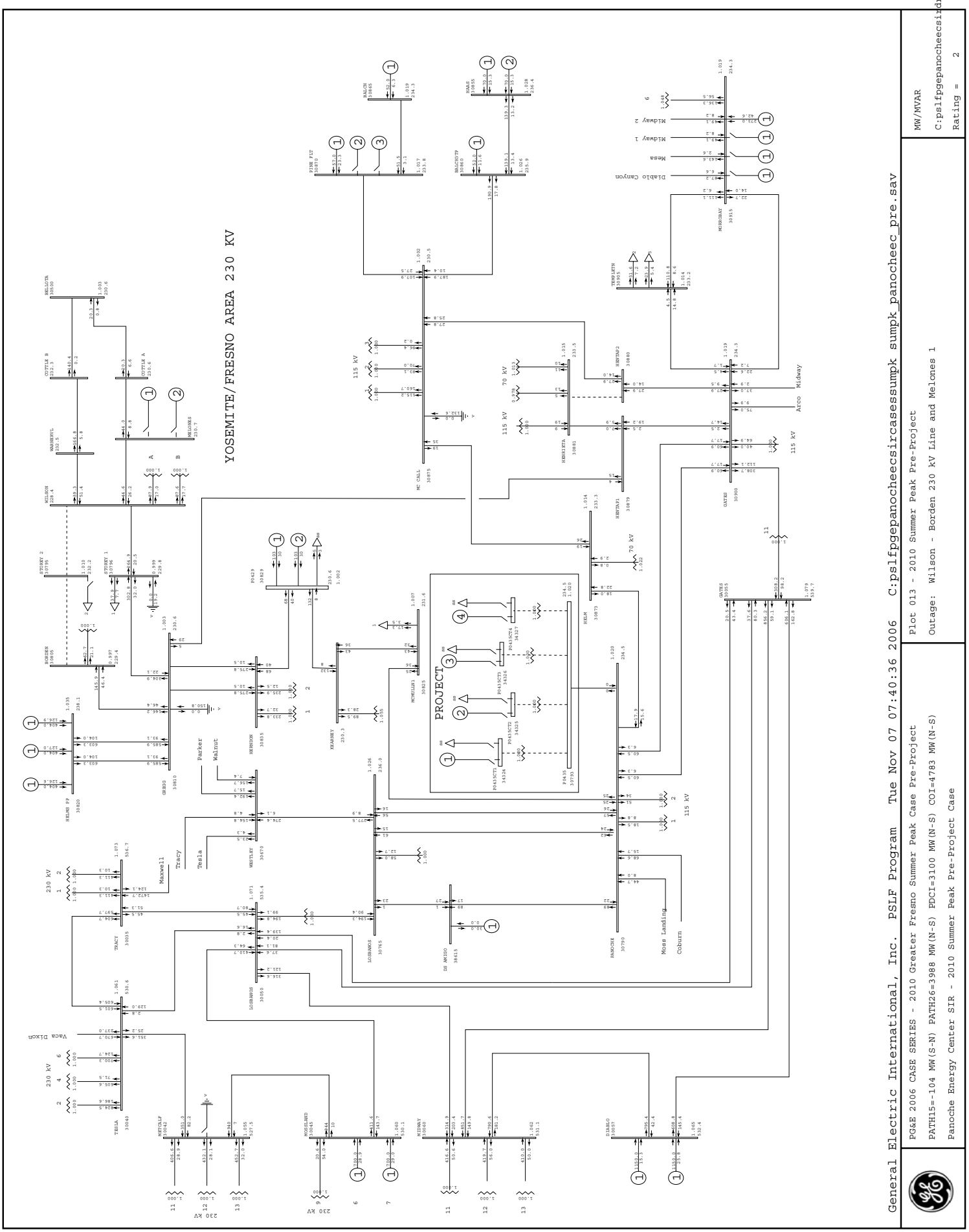
YOSEMITE/FRESNO AREA 230 KV
PROJECT
General Electric International, Inc. PSLF Program Tue Nov 07 07:40:36 2006 C:pslfpgepanocheecsircasessumpk sumpk_panocheec_pre.sav
PG&E 2006 CASE SERIES - 2010 Greater Fresno Summer Peak Case Pre-Project
PATH15=-104 MW(S-N) PATH26=3988 MW(N-S) PDCI=3100 MW(N-S) COI=4783 MW(N-S)
Panoche Energy Center SIR - 2010 Summer Peak Pre-Project Case
Plot 013 - 2010 Summer Peak Pre-Project
Outage: Wilson - Borden 230 kV Line and Melones 1
MW/MVAR
C:pslfpgepanocheecsircasessumpk sumpk_panocheec_pre.sav
Rating = 2

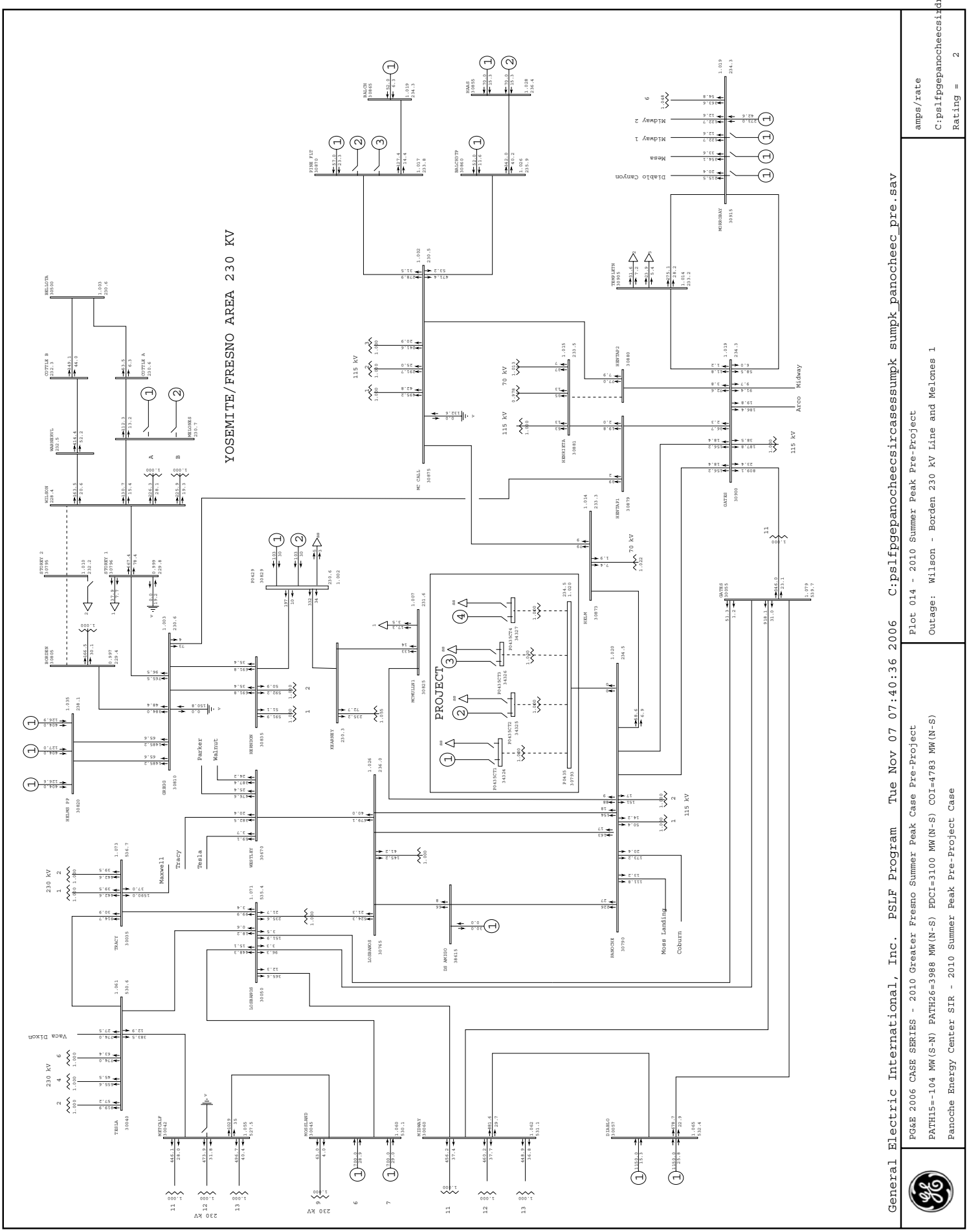
YOSEMITE/FRESNO AREA 230 KV
PROJECT
General Electric International, Inc. PSLF Program Tue Nov 07 07:40:36 2006 C:pslfpgepanocheecsircasessumpk sumpk_panocheec_pre.sav
PG&E 2006 CASE SERIES - 2010 Greater Fresno Summer Peak Case Pre-Project
PATH15=-104 MW(S-N) PATH26=3988 MW(N-S) PDCI=3100 MW(N-S) COI=4783 MW(N-S)
Panoche Energy Center SIR - 2010 Summer Peak Pre-Project Case
Plot 014 - 2010 Summer Peak Pre-Project
Outage: Wilson - Borden 230 kV Line and Melones 1
amps/rate
C:pslfpgepanocheecsirdrawpano
Rating = 2

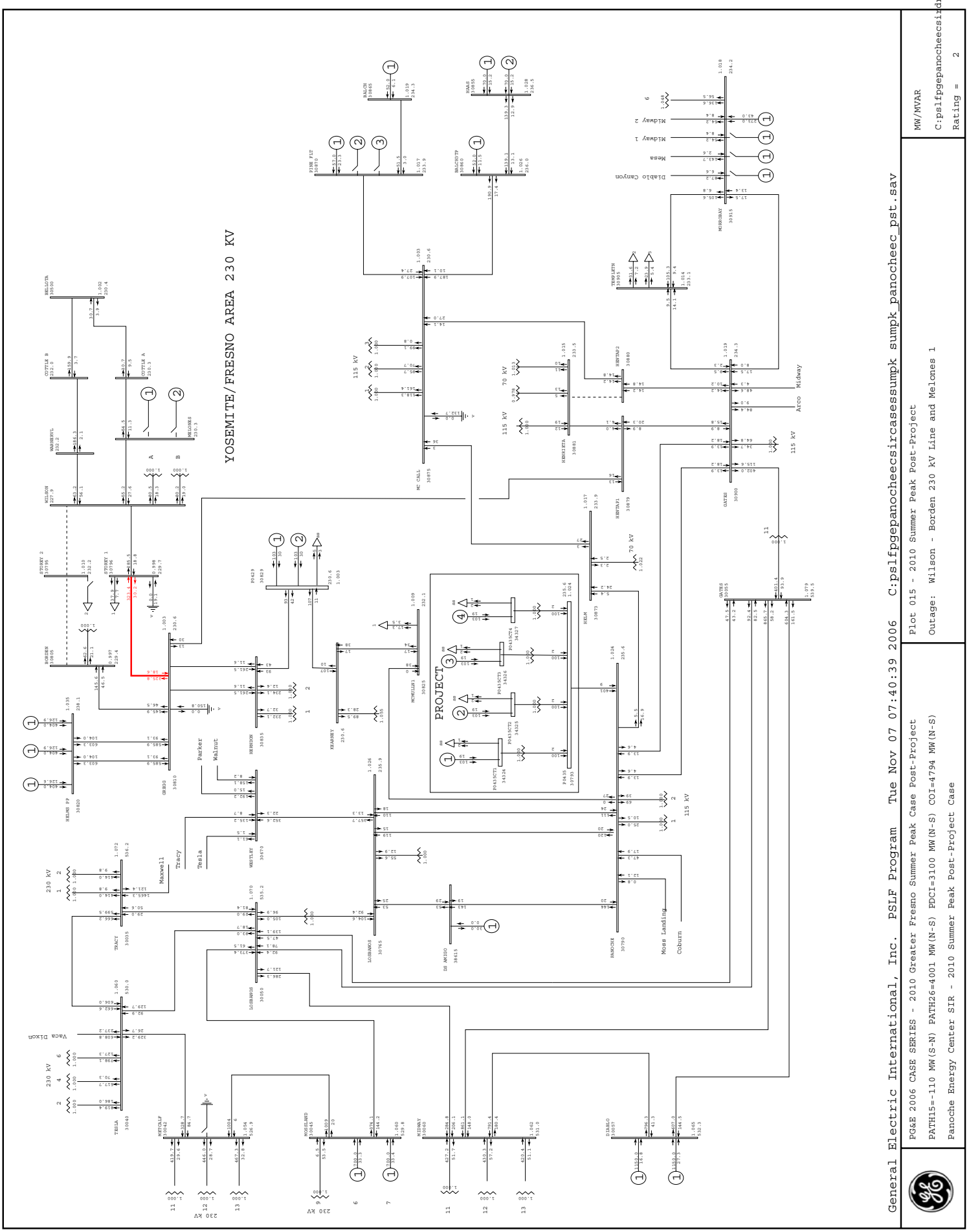
YOSEMITE/FRESNO AREA 230 KV
PROJECT
General Electric International, Inc. PSLF Program Tue Nov 07 07:40:39 2006 C:pslfpgepanocheecsircasessumpk sumpk_panocheec_pst.sav
PG&E 2006 CASE SERIES - 2010 Greater Fresno Summer Peak Case Post-Project
PATH15=-110 MW(S-N) PATH26=4001 MW(N-S) PDCI=3100 MW(N-S) COI=4794 MW(N-S)
Panoche Energy Center SIR - 2010 Summer Peak Post-Project Case
Plot 015 - 2010 Summer Peak Post-Project
Outage: Wilson - Borden 230 kV Line and Melones 1
MW/MVAR
C:pslfpgepanocheecsircdrawpano
Rating = 2

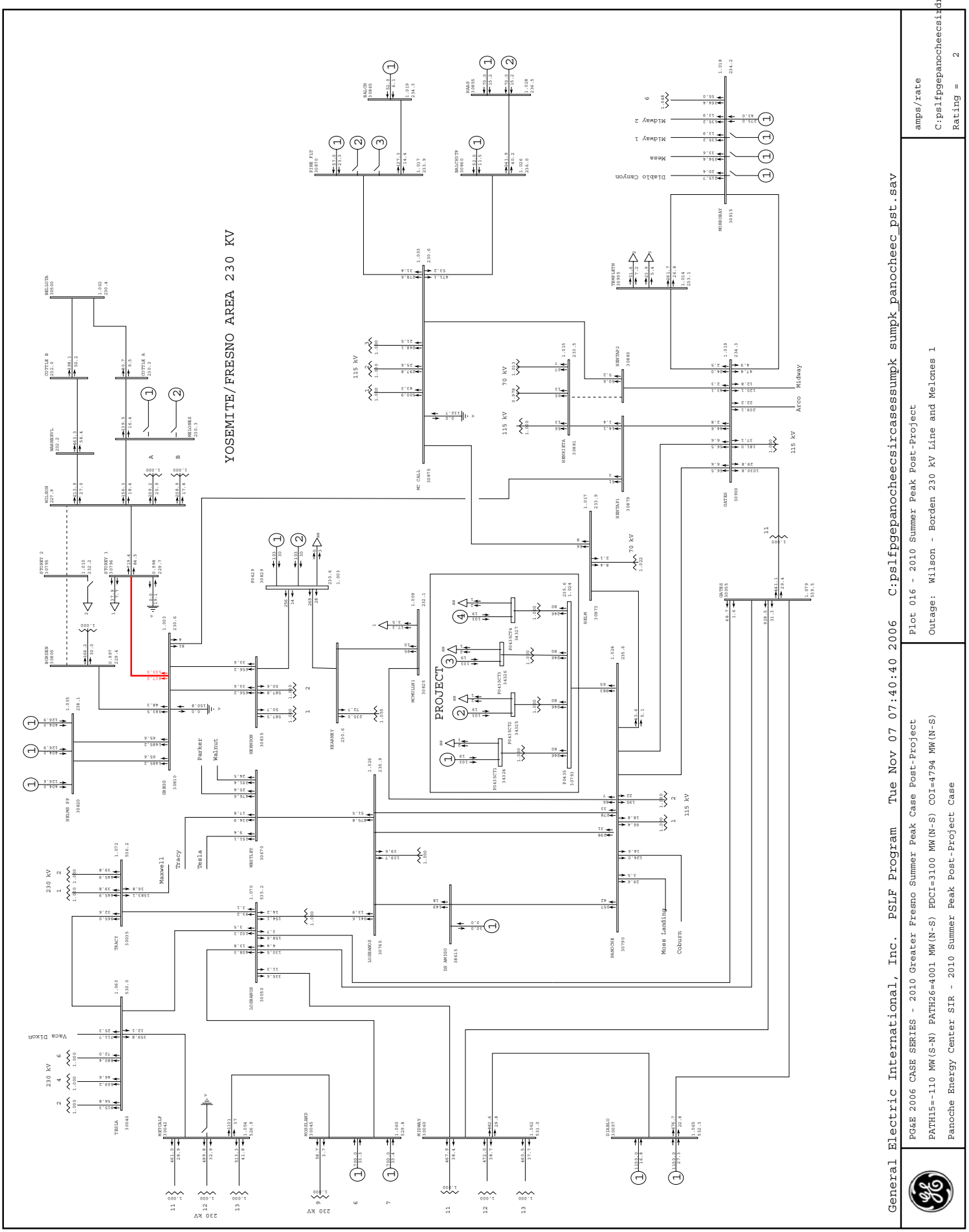
YOSEMITE/FRESNO AREA 230 KV
General Electric International, Inc. PSLF Program Tue Nov 07 07:40:40 2006 C:pslfpgepanocheecsircasessumpk_sumpk_panochec_pst.sav
PG&E 2006 CASE SERIES - 2010 Greater Fresno Summer Peak Case Post-Project
PATH15=-110 MW(S-N) PATH26=4001 MW(N-S) PDCI=3100 MW(N-S) COI=4794 MW(N-S)
Panoche Energy Center SIR - 2010 Summer Peak Post-Project Case
Plot 016 - 2010 Summer Peak Post-Project
Outage: Wilson - Borden 230 kV Line and Melones 1
amps/rate
C:pslfpgepanocheecsircasessumpk_sumpk_panochec_pst.dwg
Rating = 2
PROJECT
115 kV
70 kV
230 kV
Parker
Walnut
Tracy
Tesla
Maxwell
Vaca Dixon
Moss Landing
Coburn
Atco
Midway
Mesa
Diablo Canyon
Mckittrick
Wilson
Borden
Melones
Cottle A
Cottle B
Warnerval
Storey 1
Storey 2
Gregg
Herndon
Kearney
Mc Call
Herndon1
Herndon2
Herndon3
Herndon4
Mcmullin
Helm
Westley
Los Banos
Panoche
Tesla
Metcalf
Moseland
Midway
Diablo
Morgan
Gates
Oxtag
Tranquillity
Balch
Haas
Balch Pit
Balch Pit 2
Haas 2
Mesa
Midway 1
Midway 2
Diablo Canyon
Melones
Belota
Helms Pp
Gregg
Tracy