Appendix E

Generator Machine Dynamic Data

Machine Data for: Model: GENROU

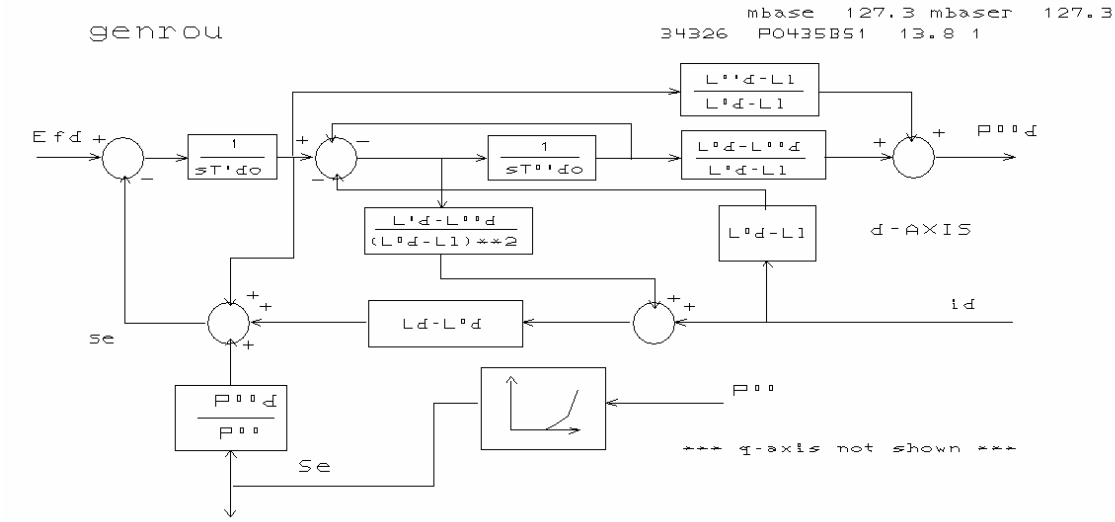

ld	1.6700	lpq	0.2480	tpdo	10.6000	s1	0.0590
lpd	0.1860	lppq	0.1208	tppdo	0.0400	s12	0.1940
lppd	0.1208	ll	0.0953	tpqo	3.8000	h	2.5030
lq	1.5900	ra	0.0000	tppqo	0.0420	d	0.0000

Variable	Description	Value
Tdop	D-axis transient rotor time constant, set	10.6
Tppdo	D-axis sub-transient rotor time constant, sec	.04
Tpqo	Q-axis transient rotor time constant, sec	3.8
Tppqo	Q-axis sub-transient rotor time constant, sec	.042
H	Inertia constant, sec	2.503
D	Damping factor, pu	0.00
Ld	D-axis synchronous reactance, pu	1.67
Lq	Q-axis synchronous reactance, pu	1.59
Lpd	D-axis transient synchronous reactance, pu	.186
Lpq	Q-axis transient synchronous reactance, pu	.248
Lppd	D-axis subtransient synchronous reactance, pu	.1208
Ll	Stator leakage reactance, pu	.0953
s1	Saturation factor at 1 pu flux	.059
s12	Saturation factor at 1.2 pu flux	.194
Ra	Stator resistance, pu	0.00
Rcomp	Compounding resistance voltage control, pu	0.00
Xcomp	Compounding reactance voltage control, pu	0.00

Excitation Data: Model: EXAC2

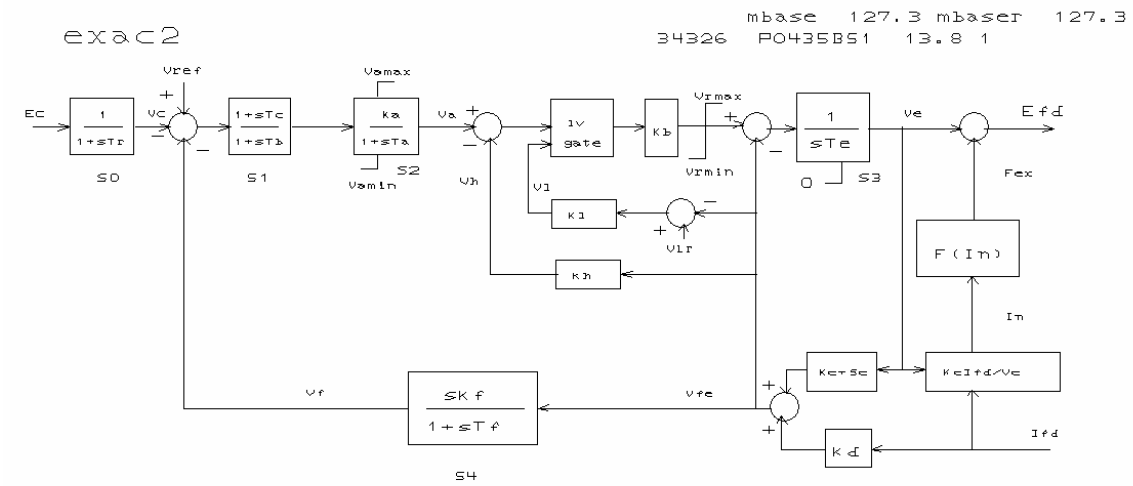

tr	0.0167	ta	0.0167	vrmax	27.0000	kh	0.0000
tb	1.0000	vamax	11.5000	vrmin	-27.0000	kf	0.0500
tc	1.0000	vamin	-11.5000	te	1.1600	tf	1.0000
ka	400.0000	kb	1.0000	kl	4.0000	kc	0.1000

Variable	Description	Value
Tr	Voltage transducer time constant, sec	0.01667
Tb	Lag time constant, sec	1.0
Tc	Lead time constant, sec	1.0
Ka	Voltage regulator gain	400
Ta	Voltage regulator time constant, sec	.016667
Vamax	Maximum control element, p.u.	11.5
Vamin	Minimum control element, p.u.	-11.5
Kb	Exciter field current controller gain, p.u.	1.0
Vrmax	Maximum controller output, p.u.	27
Vrmin	Minimum controller output, p.u.	-27
Te	Exciter time constant, sec	1.16
Kl	Exciter field current limiter gain, p.u.	4.0
Kh	Exciter field current feedback gain, p.u.	0.0
Kf	Rate feedback gain	0.05
Tf	Rate feedback time constant, sec	1.0
Kc	Rectifier regulation factor, p.u.	0.10
Kd	Exciter internal reactance, p.u.	1.3
Ke	Exciter field resistance constant, p.u.	1.0
Vlr	Maximum exciter field current, p.u.	18.3
E1	Exciter flux at knee of curve, p.u.	6.67
Se1	Saturation factor at knee	.123
E2	Maximum exciter, p.u.	8.89
Se2	Saturation factor at max flux	1.007

PSS Data: Model PSS2a

pss2a

mbase 127.3 mbaser 127.3
34326 P0435B51 13.8 1

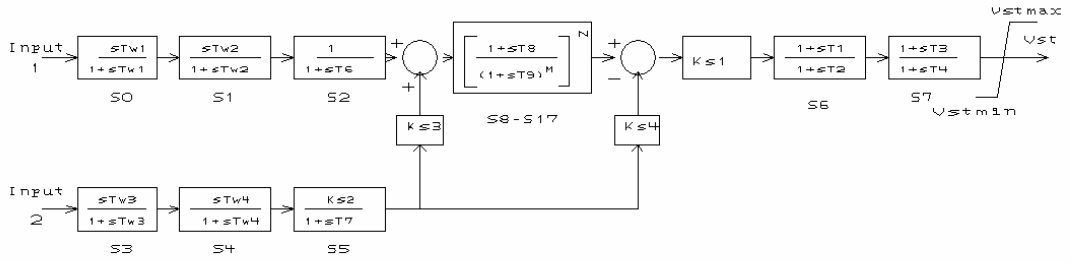

j1	1.0000	tw1	2.0000	t6	0.0000	ks4	1.0000
k1	0.0000	tw2	2.0000	t7	2.0000	t8	0.5000
j2	3.0000	tw3	2.0000	ks2	0.2370	t9	0.1000
k2	0.0000	tw4	0.0000	ks3	1.0000	n	1.0000

Variable	Description	Value
j1	Input signal #1 code	1
k1	Input signal #1 remote bus number	0
j2	Input signal #2 code	3
k2	Input signal #2 remote bus number	0
tw1	First washout on signal #1, sec	2.00
tw2	First washout on signal #1, sec	2.00
tw3	First washout on signal #2, sec	2.00
tw4	First washout on signal #2, sec	0.00
t6	Time constant on signal #1, sec	0.00
t7	Time constant on signal #2, sec	2.00
ks2	Gain signal #2	0.237
ks3	Gain signal #2	1.00
ks4	Gain signal #2	1.00
t8	Lead of ramp tracking filter	0.50
t9	Lag of ramp tracking filter	0.10
N	Order of ramp tracking filter	1.0
M	Order of ramp tracking filter	5.0
ks1	Stabilizer gain	1.0
t1	Lead/lag time constants, sec	0.15
t2	Lead/lag time constants, sec	0.03
t3	Lead/lag time constants, sec	0.15
t4	Lead/lag time constants, sec	0.03
vstmax	Stabilizer output max limit, p.u.	0.10
vstmin	Stabilizer output min limit, p.u.	-0.10

Governor Data: GGOV1

mbase 127.3 mbaser 127
34326 P0435BS1 13.8 1

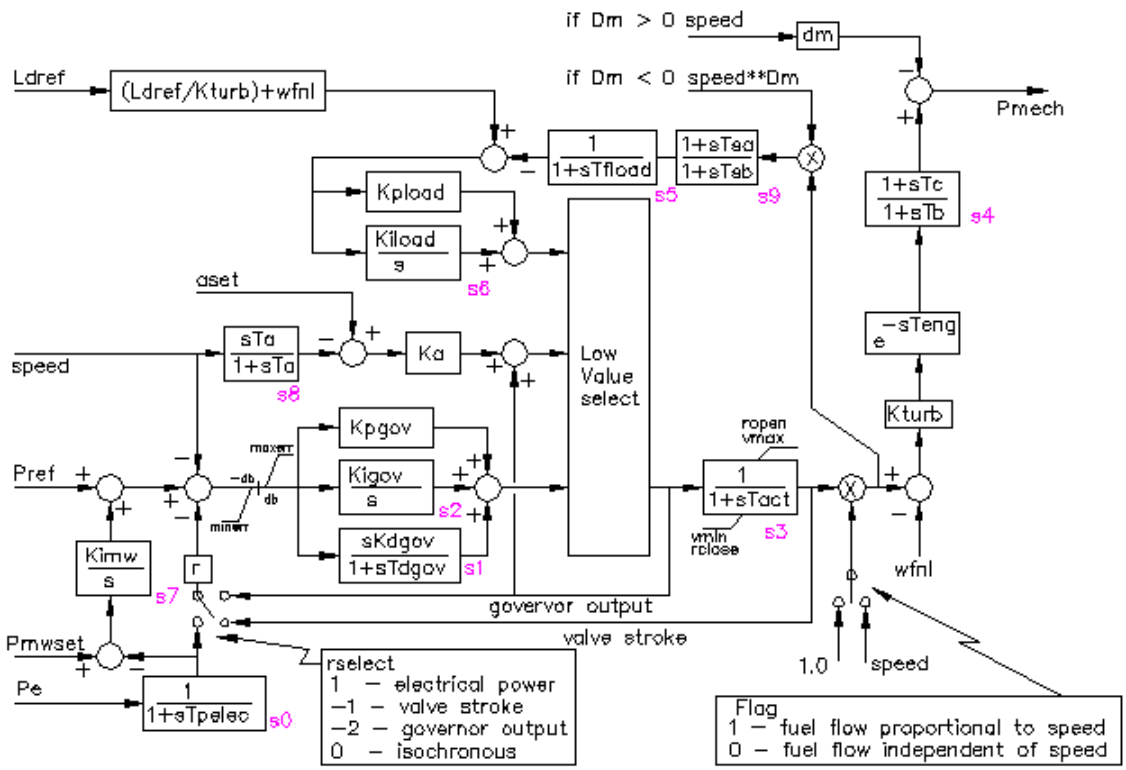

Note: The Kpgov/Kigov and Kpload/Kiload controllers include tracking logic to ensure smooth transfer between active controllers. This logic is not shown.

r	0.0400	minerr	-0.0500	tdgov	1.0000	kturb	1.5000
rselect	1.0000	kpgov	10.0000	vmax	1.0000	wfnl	0.1500
tpelec	1.0000	kigov	2.0000	vmin	0.1000	tb	0.5000
maxerr	0.0500	kdgov	0.0000	tact	0.5000	tc	0.0000

Variable	Description	Value
R	Permanent droop, p.u.	0.04
Rselect	Selection for feedback signal for droop	1
Tpelec	Electrical power transducer time constant, sec	1
Maxerr	Maximum value of speed error signal	.05
Minerr	Minimum value of speed error signal	-.05
Kpgov	Governor proportional gain	10
Kigov	Governor integral gain	2
Kdgov	Governor derivative gain	0
Tdgov	Governor derivative controller time constant, sec	1
Vmax	Maximum valve position limit	1.
Vmin	Minimum valve position limit	0.1
Tact	Actuator time constant, sec	0.5
Kturb	Valve-to-power gain	1.5
Wfnl	No load fuel flow, p.u.	0.15
Tb	Power development lag time constant	.5
Tc	Power development lead time constant	0
Flag	Switch for turbine output	0
Teng	Transport lag time constant for diesel engine	0
Tfload	Load limiter time constant	3
Kpload	Load limiter proportional gain for PI controller	1
Kiload	Load limiter integral gain for PI controller	0.2
Ldref	Load limiter reference value, p.u.	1.0
Dm	Mechanical damping coefficient, p.u.	0.0
Ropen	Maximum valve opening rate, p.u./sec	.1
Rclose	Minimum valve closing rate, p.u./sec	-.1
Kimw	Power controller (reset) gain	0.0
Pmwset	Power controller setpoint, MW	0.0
aset	Acceleration limiter setpoint, p.u./sec	0.01
Ka	Acceleration limiter Gain	10.0
Ta	Acceleration limiter time constant, sec	0.1
Db	Speed governor dead band	0.0
Tsa	Temperature detection lead time constant, sec	4
Tsb	Temperature detection lag time constant, sec	5
Rup	Maximum rate of load limit increase	99
Rdown	Maximum rate of load limit decrease	-99
Tbd	Speed Ratio Valve and Fuel Supply lag time constant, sec	0.0
Tcd	Speed Ratio Valve and Fuel Supply lead time constant, sec	0.0