# Interconnection System Impact Re-study Report

## Panoche Energy Center, LLC

## Panoche Energy Center Project

California ISO
Your Link to Power

December 12, 2006

# Table of Contents


**1.** Summary ..... 1

**2.** Project and Interconnection Information ..... 2

**3.** Study Assumptions ..... 3

**4.** Power Flow Study Base Case ..... 4

**5.** Study Criteria Summary ..... 5

5.1 Steady State Study Criteria – Normal Overloads ..... 5

5.2 Steady State Study Criteria – Emergency Overloads ..... 5

5.3 Dynamic Stability Study Criteria ..... 5

**6.** Steady State Power Flow Study and Results ..... 6

6.1 Contingencies ..... 6

6.2 Results ..... 6

**7.** System Protection Study ..... 10

7.1 System Protection Study Input Data ..... 10

7.2 Results ..... 10

7.3 Preliminary Protection Requirements ..... 11

**8.** Reactive Power Deficiency Analysis ..... 11

**9.** Dynamic Stability Study and Results ..... 12

9.1 Dynamic Stability Study Scenarios ..... 12

9.2 Parameters Monitored to Evaluate System Stability Performance ..... 13

9.3 Results ..... 14

**10.** Transmission Line Evaluation ..... 14

**11.** Substation Evaluation ..... 14

11.1 Overstressed Breakers ..... 14

11.2 Bus Loading Evaluation ..... 15

11.3 Interconnection Feasibility Evaluation ..... 15

11.4 Operational Overload ..... 15

**12.** Mitigation ..... 16

12.1 Mitigating Pre-project Normal Overloads ..... 17

12.2 Mitigating New Category "B" Emergency Overloads ..... 18

12.3 Mitigating Pre-project Category "B" Emergency Overloads ..... 18

12.4 Mitigating Category "C" Emergency Overloads ..... 19

12.5 Overstressed Breakers ..... 20

**13.** Environmental Evaluation/ Permitting ..... 20

13.1 CPUC General Order 131-D ..... 20

13.2 CPUC Section 851 ..... 20

**14.** Study Updates ..... 21

**15.** Stand-by Power ..... 21

**Appendices:**

**A.** Study Plan
**B.** Contingency Lists for Outages - Autocon Input Files
**C.** Power Flow Results - Autocon Comparison Files
**D.** Power Flow Plots
**E.** Generator Machine Dynamic Data
**F.** Dynamic Stability Plots
**G.** Preliminary Protection Requirements

# 1. Summary

Panoche Energy Center, LLC, (formally Cinergy Solutions Inc.), an Interconnection Customer (IC), has submitted a re-study request to the California Independent System Operator Corporation (CAISO) for the Panoche Energy Center Project (Project). The IC proposes to interconnect four gas turbine generators onto Pacific Gas and Electric Company's (PG&E) 230 kV bus at Panoche Substation via a 230 kV tie line from Panoche Substation to the Project's switchyard. The maximum net output of the Project is 401 MW. The differences between the original System Impact Study (SIS) and this re-study are changes in the type and size of the step-up transformers that will be used for the project as well as the commercial operation date. Previously this interconnection was targeted to be in-service by June 2008. The revised in-service date is September 2009.

Under CAISO's Large Generator Interconnection Procedures (LGIP) and due to higher queued generation projects dropping out of the queue, both CAISO and PG&E have agreed that an Interconnection System Impact Re-study (ISIR) is required to re-evaluate the impact of the Project on PG&E's transmission grid. This ISIR determined:

- The transmission system impacts caused solely by the interconnection of the Project.
- The system reinforcement necessary to mitigate any adverse impact of the Project under various system conditions.

To determine the updated system impacts caused by the Project, the ISIR was performed using full loop base cases modeling year 2010 summer peak, summer off-peak, and spring peak conditions. The scope for the ISIR included:

- Steady State Power Flow Analyses
- Dynamic Stability Analyses
- System Protection Analyses
- Substation Evaluation

PG&E's evaluation has concluded that the interconnection of the Project would cause one (1) new normal, one (1) new Category "B" emergency, and three (3) new Category "C" emergency overloads for conditions studied for. In addition the interconnection of the Project would exacerbate five (5) Category "B" and nine (9) Category "C" emergency overloads for conditions studied for.

Dynamic Stability Study results indicate that the transmission system's transient performance would not be significantly impacted by the Project following selected disturbances.

The protection requirement for the Project would require installation of a fully redundant, double-pilot current differential scheme for the 230 kV generator tie line as

well as replacement of four (4) currents transformers (CTs) and their associated protective relays on four 230 kV breakers at Panoche Substation.

The addition of the Project would overstress one (1) 115 kV breaker and two (2) 230 kV breakers at Panoche Substation.

Mitigations of overloads and overstressed breakers are provided in Section 12.

# 2. Project and Interconnection Information

The Project consists of four gas turbine generators rated for 410 MW with a plant auxiliary load of 9 MW. The maximum net output to the grid will be 401 MW. Each generator will have one 13.8/230 kV step-up transformer. The Project will connect to the 230 kV bus at PG&E's Panoche Substation via a generator tie line to be built by the IC. A conceptual one-line diagram of the Project is shown in Figure 2-1.

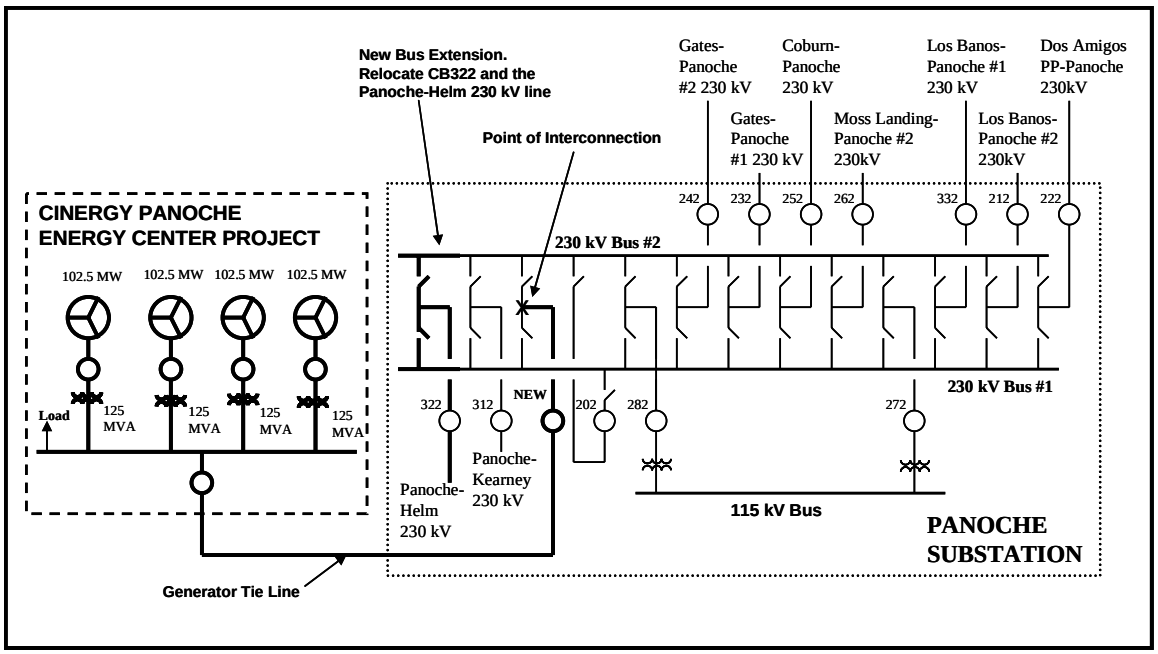


Figure 2-1: Conceptual One-Line Diagram

A map showing the transmission facilities in the vicinity of the Project is provided in Figure 2-2.

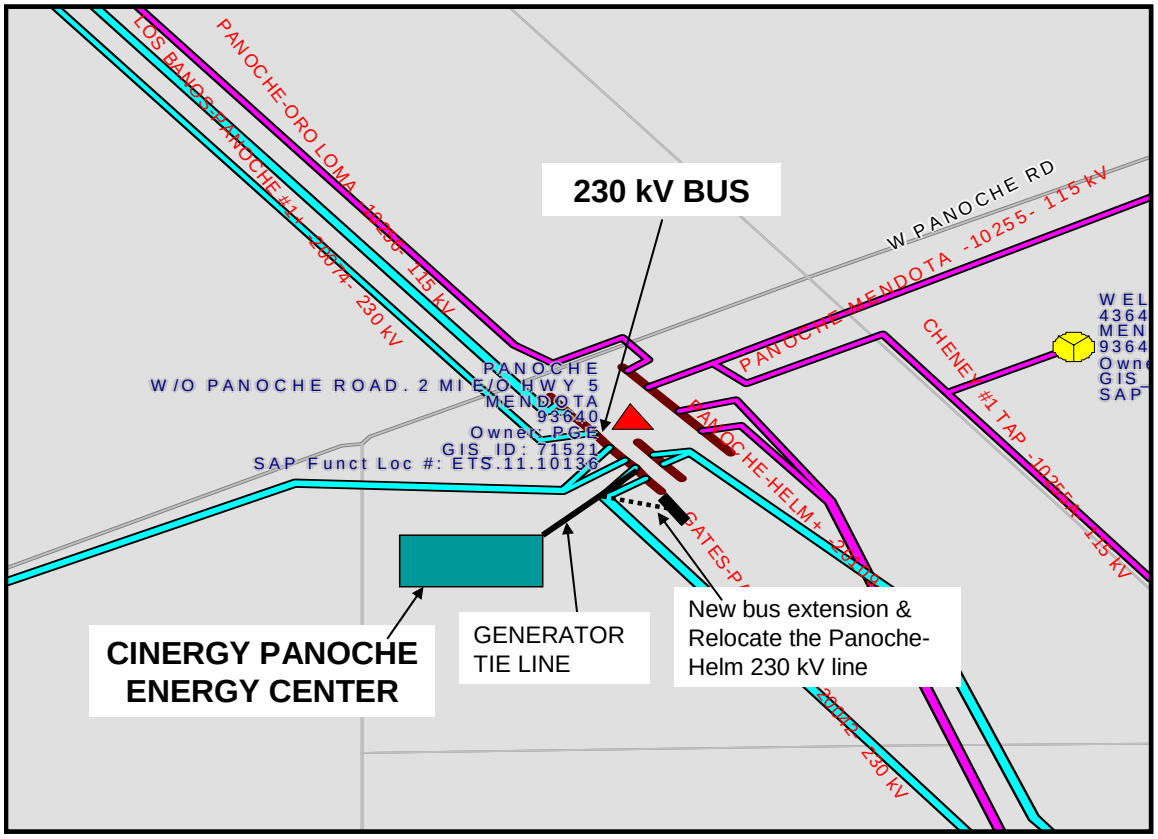


Figure 2-2: Vicinity Map

## 3. Study Assumptions

PG&E conducted the ISIR using the following assumptions:

1) The Project consists of four gas turbine generators, and each is rated for 102.5 MW. The total maximum total output is 410 MW with an expected total plant load of 9 MW. Therefore, the maximum net output to the grid is 401 MW.

2) The expected commercial operation date is September 2009.

3) The Project employs four step-up transformers and one for each generator. Each transformer is a three phase, 13.8/230 kV transformer, rated 75/100/125 MVA (OA/FA/FA), and with an impedance of 10% at 75 MVA base.

4) The IC will engineer, procure, construct, and maintain its project facility.

5) The IC will engineer, procure, and construct the generator tie line (from the Project's switchyard to Panoche Substation). The generator tie line is about 1,000 feet long with 795 ACSS or equivalent conductors.

6) This study took into account the planned generating facilities in PG&E's service territory whose schedules are concurrent with or precede the Project's schedule.

7) **This study assumed that the Project could be interconnected using the existing bus configuration at Panoche Substation. The final configuration of the substation bus will be determined in the Interconnection Facility Study (IFAS) process. The final configuration may be different in order to conform to PG&E's existing standards for bus design. Any additional interconnection costs resulting from a new bus configuration will be the responsibility of the Project.**

# 4. Power Flow Study Base Case

Three power flow base cases were used to evaluate the transmission system impacts of the Project. While it is impossible to study all combinations of system load and generation levels during all seasons and at all times of the day, these three base cases represented extreme loading and generation conditions for the study area.

PG&E cannot guarantee that the Project can operate at maximum rated output 24 hours a day, year round, without system impacts, nor can PG&E guarantee that the Project will not cause system impacts during the times and seasons not studied in the ISIR.

- **2010 Summer Peak Base Case**

  Power flow analyses were performed using PG&E's 2010 summer peak base case for the Greater Fresno area (in General Electric Power Flow format). This base case was developed from PG&E's 2005 base case series and incorporates a 1-in-10 year extreme weather load level for the Greater Fresno area.

- **2010 Spring Peak Base Case**

  Power flow analyses were performed using the 2010 spring base case for the Greater Fresno area to evaluate the potential congestion on transmission facilities under reduced load and increased generation levels during a typical spring season. Hydro generation was modeled in a very high level as typical in the spring season.

- **2010 Summer Off-Peak Base Case**

  Power flow analyses were performed using the 2010 summer off-peak base case for the Greater Fresno area to evaluate potential congestion on transmission facilities during the off-peak system condition. The summer off-peak loads were modeled at 50% of the summer peak load in the Greater Fresno area. Path 15 flows were modeled around 5,000 MW in a south-to-north direction. Two units at Helms PGP (620 MW total) were assumed in pumping mode, and the Madera Unit was generating at 28 MW.

These three base cases modeled all approved PG&E transmission reliability projects that will be operational by 2010. These three base cases also modeled all proposed generation projects that will be operational by 2010. However, some generation projects that are electrically far from the Project were either turned off or modeled with reduced generation to balance the loads and resources in the power flow model. The

major generation projects included are shown in Attachment 1 of Appendix A.

# 5. Study Criteria Summary

The CAISO Controlled Grid Planning Criteria, which incorporate the Western Electricity Coordinating Council (WECC) and the North American Electric Reliability Council (NERC) planning criteria, were used to evaluate the impact of the Project on the PG&E transmission system.

## 5.1 Steady State Study Criteria – Normal Overloads

Normal overloaded facilities are facilities that exceed 100% of its respective normal ratings. The CAISO Controlled Grid Reliability Criteria requires the loading of all transmission system facilities be within their normal summer ratings for normal conditions.

## 5.2 Steady State Study Criteria – Emergency Overloads

Emergency overloaded facilities are facilities that exceed 100% of its respective emergency ratings. The emergency overloads refer to overloads that occur during single element contingencies (Category "B") and multiple element contingencies (Category "C").

## 5.3 Dynamic Stability Study Criteria

According to the WECC Disturbance-Performance Table of Allowable Effects on Other Systems[1], after a Category "B" disturbance, the transmission system performance should meet the following criteria:

- Transient voltage dip should not be below 25 percent at load buses or 30 percent at non-load buses at any time.
- The duration of the transient voltage dip greater than 20 percent should not exceed 20 cycles at load buses.
- The minimum transient frequency should not fall below 59.6 Hz for more than 6 cycles at load buses.

After a Category "C" disturbance, the transmission system performance should meet the following criteria:

- Transient voltage dip should not be below 30 percent at any bus at any time.
- The duration of a transient voltage dip greater than 20 percent should not exceed 40 cycles at load buses.

[1] Cited from Draft Western Electricity Coordinating Council (WECC) Planning Standards published in December 2, 1999.

- The minimum transient frequency should not fall below 59.0 Hz for more than 6 cycles at load buses.

# 6. Steady State Power Flow Study and Results

Contingency analysis was performed to determine the steady state performance of the transmission grid following the addition of the Project on PG&E's transmission system.

## 6.1 Contingencies

The Category "B" and "C" contingencies used in this analysis are provided in Appendix B. The single (Category "B") and selected multiple (Category "C") contingencies include the following outages:

### 6.1.1 Category "B"

- All single (60 - 230 kV) generator outages within the study area.
- All single (60 - 230 kV) transmission circuit outages within the study area.
- All single (60 - 230 kV) transformer outages within the study area.
- Selected overlapping single generator and transmission circuit outages for the transmission lines and generators within the study area.

### 6.1.2 Category "C"

- Selected bus outages within the study area.
- Selected outages of double circuit tower lines within the study area.

## 6.2 Results

Appendix C shows the steady state power flow analysis results. Appendix D includes selected power flow plots.

### 6.2.1 Normal Overloads (Category "A")

The addition of the Project exacerbates one normal overload under projected 2010 summer peak conditions. The Project causes no other normal overloads under projected 2010 summer off-peak or spring peak conditions. Table 6-1 summarizes the normal overloads. The pre-project overload is shown as shaded in the table.

Table 6-1: Normal Overloads

| Over Loaded Component | Rating (Amps) | Pre- Project Loading (Amps \|%Rating) | | Post-Project Loading (Amps \|%Rating) | | % Change from Pre-Project Loading |
|---|---|---|---|---|---|---|
| 2010 Summer Peak | | | | | | |
| Borden – Gregg 230 kV Line | 675 | 776 | 115% | 807 | 119% | +4% |

### 6.2.2 Emergency Overloads (Category "B")

Under projected 2010 summer peak conditions, the addition of the Project causes one (1) new and exacerbates two (2) Category "B" emergency overloads. Under projected 2010 spring peak conditions, the addition of the Project exacerbates two (2) Category "B" emergency overloads. Under projected 2010 summer off-peak conditions, the Project causes no Category "B" emergency overload. Table 6-2 summarizes these Category "B" emergency overloads. The pre-project overloads are shown as shaded in the table.

Table 6-2: Category "B" Emergency Overloads

| Over Loaded Component | Contingency | Rating (Amps) | Pre- Project Loading (Amps \|%Rating) | | Post-Project Loading (Amps \|%Rating) | | % Change from Pre-Project Loading |
|---|---|---|---|---|---|---|---|
| 2010 Summer Peak | | | | | | | |
| Wilson – Gregg 230 kV Line (Storey 1 – Gregg) | Wilson - Borden 230 kV Line and Melones Unit 1 | 793 | 765 | 96% | 817 | 103% | +7% |
| | Wilson - Borden 230 kV Line and Exchequer | 793 | 759 | 96% | 811 | 102% | +6% |
| Borden – Gregg 230 kV Line | Wilson - Gregg 230 kV Line and Melones Unit 1 | 793 | 824 | 104% | 872 | 110% | +6% |
| | P0429 - Kearney 230 kV Line and Melones Unit 1 | 793 | 853 | 108% | 871 | 110% | +2% |
| | P0429 - Kearney 230 kV Line and Exchequer | 793 | 847 | 107% | 865 | 109% | +2% |
| | Wilson - Gregg 230 kV Line and Exchequer | 793 | 814 | 103% | 863 | 109% | +6% |
| | Westley - Los Banos 230 kV Line and Exchequer | 793 | 822 | 104% | 859 | 108% | +4% |
| | Chowchilla - Kerckhoff #2 115 kV Line and Exchequer | 793 | 821 | 104% | 852 | 107% | +3% |
| | Dairyland - Mendota 115 kV Line and Exchequer | 793 | 818 | 103% | 850 | 107% | +4% |
| Oro Loma – Canal #1 70 kV Line (Oro Loma – Dos Palos) | Los Banos - Livingston Jct - Canal 70 kV Line | 282 | 297 | 105% | 302 | 107% | +2% |
| 2010 Spring Peak | | | | | | | |
| Helm – Kerman 70 kV Line (Agrico Jct – Kerman) | Kearney 230/70 kV Bank 2 | 379 | 618 | 163% | 622 | 164% | +1% |
| | Gregg - Herndon #1 230 kV Line and Helms Unit 1 | 379 | 384 | 101% | 396 | 104% | +3% |

| Over Loaded Component | Contingency | Rating (Amps) | Pre- Project Loading (Amps \|%Rating) | | Post-Project Loading (Amps \|%Rating) | | % Change from Pre-Project Loading |
|---|---|---|---|---|---|---|---|
| | Gregg - Herndon #2 230 kV Line and Helms Unit 1 | 379 | 384 | 101% | 396 | 104% | +3% |
| | Gregg - Ashlan 230 kV Line and Helms Unit 1 | 379 | 384 | 101% | 396 | 104% | +3% |
| | Helms - Gregg #2 230 kV Line and Helms Unit 1 | 379 | 382 | 101% | 395 | 104% | +3% |
| | Wilson - Gregg 230 kV Line and Helms Unit 1 | 379 | 380 | 100% | 391 | 103% | +3% |
| | Gates - Gregg 230 kV Line and Helms Unit 1 | 379 | 381 | 100% | 391 | 103% | +3% |
| | Borden - Gregg 230 kV Line and Helms Unit 1 | 379 | 371 | 98% | 382 | 101% | +3% |
| | Helms Unit 1 | 322 | 313 | 97% | 326 | 101% | +4% |
| | Helms Unit 2 | 322 | 313 | 97% | 326 | 101% | +4% |
| | Helms Unit 3 | 322 | 313 | 97% | 326 | 101% | +4% |
| Kearney – Kerman 70 kV Line (Fresno WW Tap – Kerman) | Kearney 230/70 kV Bank 2 | 379 | 434 | 114% | 438 | 115% | +1% |
| Kearney – Kerman 70 kV Line (Kearney – Fresno WW Tap) | Kearney 230/70 kV Bank 2 | 379 | 444 | 117% | 447 | 118% | +1% |

### 6.2.3 Emergency Overloads (Category "C")

Under projected 2010 summer peak conditions, the addition of the Project causes one (1) new and exacerbates two (2) Category "C" emergency overloads. Under projected 2010 summer off-peak conditions, the addition of the Project causes two (2) new and exacerbates four (4) Category "C" emergency overloads. Under projected 2010 spring peak conditions, the addition of the Project exacerbates three (3) Category "C" emergency overloads. These Category "C" emergency overloads are summarized in Table 6-3. The pre-project overloads are shown as shaded in the table.

Table 6-3: Category "C" Emergency Overloads

| Over Loaded Component | Contingency | Rating (Amps) | Pre- Project Loading (Amps \|%Rating) | | Post-Project Loading (Amps \|%Rating) | | % Change from Pre-Project Loading |
|---|---|---|---|---|---|---|---|
| 2010 Summer Peak | | | | | | | |
| Coppermine – Tivy Valley 70 kV Line | Borden - Gregg and Wilson - Gregg 230 kV Lines | 298 | 281 | 94% | 299 | 101% | +7% |
| Borden – Gregg 230 kV Line | Ashlan 230 kV Bus | 793 | 854 | 108% | 884 | 111% | +3% |
| | Herndon - Bullard #1 and #2 115 kV Lines | 793 | 848 | 107% | 878 | 111% | +4% |

| Over Loaded Component | Contingency | Rating (Amps) | Pre- Project Loading (Amps \|%Rating) | | Post-Project Loading (Amps \|%Rating) | | % Change from Pre-Project Loading |
|---|---|---|---|---|---|---|---|
| | Reedley 115 kV Bus | 793 | 825 | 104% | 855 | 108% | +4% |
| | Herndon 115 kV Bus Section 2 | 793 | 825 | 104% | 854 | 108% | +4% |
| | Bullard 115 kV Bus | 793 | 822 | 104% | 852 | 107% | +3% |
| | Herndon - Barton and Herndon - Manchester 115 kV Lines | 793 | 820 | 103% | 849 | 107% | +4% |
| | Kearney 230 kV Bus | 793 | 831 | 105% | 849 | 107% | +2% |
| | Woodward 115 kV Bus | 793 | 818 | 103% | 848 | 107% | +4% |
| Panoche – Oro Loma 115 kV Line (DFSTP – Oro Loma) | Los Banos 70 kV Bus | 608 | 641 | 105% | 667 | 110% | +5% |
| Panoche – Oro Loma 115 kV Line (Hammonds – DFSTP) | Los Banos 70 kV Bus | 608 | 650 | 107% | 676 | 111% | +4% |
| Panoche – Oro Loma 115 kV Line (Panoche Jct – Hammonds) | Los Banos 70 kV Bus | 608 | 718 | 118% | 745 | 123% | 5% |
| Tivy Valley – Reedley 70 kV Line | Borden - Gregg and Wilson - Gregg 230 kV Lines | 298 | 360 | 121% | 378 | 127% | 6% |
| Wilson – LeGrand 115 kV Line | Borden - Gregg and Wilson - Gregg 230 kV Lines | 512 | 569 | 111% | 625 | 122% | +11% |
| | Warnerville - Borden and Wilson - Gregg 230 kV Lines | 512 | 541 | 106% | 581 | 114% | +8% |
| | Kerckhoff - Clovis - Sanger #1 and #2 115 kV Lines | 512 | 502 | 98% | 532 | 104% | +6% |
| 2010 Summer Off-Peak | | | | | | | |
| Coppermine – Tivy Valley 70 kV Line | Sanger 115 kV Bus | 298 | 294 | 99% | 300 | 101% | +2% |
| Herndon – Ashlan 230 kV Line (Figarden Tap 1 – Ashlan) | Gregg - Herndon #1 and #2 230 kV Lines | 851 | 819 | 96% | 885 | 104% | +8% |
| Herndon – Ashlan 230 kV Line (Herndon – Figarden Tap 1) | Gregg - Herndon #1 and #2 230 kV Lines | 851 | 915 | 108% | 980 | 115% | +7% |
| LeGrand – Dairyland 115 kV Line | Herndon - P0429 and Gates - Gregg 230 kV Lines | 398 | 399 | 100% | 442 | 111% | +11% |
| | Sanger 115 kV Bus | 398 | 382 | 96% | 417 | 105% | +9% |
| McCall – Sanger #3 115 kV Lines | McCall - Sanger #1 and #2 115 kV Lines | 974 | 1262 | 130% | 1281 | 132% | +2% |
| | Herndon - P0429 and Gates - Gregg 230 kV Lines | 974 | 987 | 101% | 1013 | 104% | +3% |
| Tivy Valley – Reedley 70 kV Line | Sanger 115 kV Bus | 298 | 324 | 109% | 330 | 111% | +2% |
| 2010 Spring Peak | | | | | | | |
| Helm – Kerman 70 kV Line (Agrico Jct – Kerman) | Kearney 230 kV Bus | 379 | 612 | 161% | 617 | 163% | +2% |
| | Helms - Gregg #1 and #2 230 kV Lines | 379 | 452 | 119% | 464 | 122% | +3% |

| Over Loaded Component | Contingency | Rating (Amps) | Pre- Project Loading (Amps \| | %Rating) | Post-Project Loading (Amps \| | %Rating) | % Change from Pre-Project Loading |
|---|---|---|---|---|---|---|---|
| | Helms PP 230 kV Bus | 379 | 452 | 119% | 464 | 122% | +3% |
| Kearney – Kerman 70 kV Line (Fresno WW Tap – Kerman) | Kearney 230 kV Bus | 379 | 428 | 113% | 433 | 114% | +1% |
| Kearney – Kerman 70 kV Line (Kearney – Fresno WW Tap) | Kearney 230 kV Bus | 379 | 438 | 115% | 442 | 117% | +2% |
| Wilson – LeGrand 115 kV Line | Kerckhoff - Clovis - Sanger #1 and #2 115 kV Lines | 512 | 513 | 100% | 543 | 106% | +6% |

# 7. System Protection Study

Short circuit studies were performed to determine the impact of adding the Project to the transmission system. The fault duties were calculated before and after the project.

## 7.1 System Protection Study Input Data

The following input data provided by the Applicant was used in this study:

<u>Brush BDAX 98-330ER Gas Turbine Generator</u>

- Synchronous reactance ($X_d$) = 1.652 pu @ 108.2 MVA
- Transient reactance ($X'_d$) = 0.2119 pu @ 108.2 MVA
- Sub-transient reactance ($X''_d$) = 0.1582 pu @ 108.2 MVA

<u>Step-up Transformer</u>

- 13.8/230 kV, 75/100/125 MVA(OA,FA,FA), Z = 10 % on 75 MVA base

## 7.2 Results

Table 7-1 lists the available short circuit duty at the buses electrically adjacent to the Project. This data was used to determine if any equipment would be overstressed by the addition of the Project.

Table 7-1: Short circuit study results

| Fault Location | Pre-Project | | Post-Project (Phase 1) | | | |
|---|---|---|---|---|---|---|
| | 3∅ | L-G | 3∅ | % Increase | L-G | % Increase |
| Calpeak Pnch 115 kV | 27,236 | 28,284 | 26,872 | -1% | 29,054 | 3% |
| Coburn 230 kV | 5,748 | 4,721 | 5,579 | -3% | 4,569 | -3% |
| Dos Amigos 230 kV | 13,733 | 11,793 | 13,477 | -2% | 11,513 | -2% |
| Gates 230 kV | 32,847 | 29,465 | 32,676 | -1% | 29,144 | -2% |
| Hammonds 115 kV | 16,115 | 12,643 | 16,342 | 1% | 13,023 | 3% |
| Helm 230 kV | 10,008 | 7,558 | 10,345 | 3% | 7,812 | 3% |
| Kearney 230 kV | 12,446 | 10,838 | 12,589 | 1% | 10,922 | 1% |
| Los Banos 230 kV | 29,302 | 29,251 | 29,726 | 1% | 28,937 | -2% |
| McMullin 230 kV | 9,323 | 7,303 | 9,515 | 3% | 7,425 | 2% |
| Mendota 115 kV | 10,072 | 7,093 | 10,236 | 2% | 7,175 | 1% |
| Moss Landing B1 115 kV | 35,503 | 40,403 | 35,660 | 1% | 40,539 | 1% |
| Moss Landing B2 230 kV | 35,509 | 40,409 | 35,666 | 1% | 40,545 | 1% |
| Oro Loma 115 kV | 7,739 | 6,021 | 7,820 | 1% | 6,068 | 1% |
| Oxford 115 kV | 5,955 | 4,361 | 6,037 | 1% | 4,403 | 1% |
| Panoche 115 kV | 27,563 | 28,884 | 27,160 | -1% | 29,775 | 3% |
| Panoche 230 kV | 26,019 | 18,973 | 28,425 | 9% | 24,696 | 30% |
| Panoche 2 115 kV | 27,597 | 28,919 | 27,196 | -1% | 29,818 | 3% |
| Panoche EC 230 kV | 0 | 0 | 27,690 | N/A | 24,190 | N/A |
| Schindler 115 kV | 6,521 | 5,018 | 6,567 | 1% | 5,039 | 1% |
| SLWD #3 115 kV | 3,705 | 2,558 | 3,736 | 1% | 2,572 | 1% |
| SLWD #5 115 kV | 4,675 | 3,468 | 4,726 | 1% | 3,485 | 1% |
| Westlands 115 kV | 6,739 | 5,024 | 6,845 | 2% | 5,074 | 1% |

### 7.3 Preliminary Protection Requirements

Per Section G2.1 of the PG&E Interconnection Handbook, PG&E protection requirements are designed and intended to protect PG&E's system only. The applicant is responsible for the protection of its own system and equipment and must meet the requirements in the PG&E Interconnection Handbook.

The Protection Requirements will consist of a fully redundant, double-pilot current differential scheme utilizing dual fiber optic communications for the Panoche – Panoche EC 230KV Line. Due to the interconnection of the Project four terminals on the Panoche 230kV Bus will require relay replacement due to current transformer (CT) saturation. Appendix G provides more details of the preliminary protection requirements.

## 8. Reactive Power Deficiency Analysis

The power flow studies of Category "B" and "C" contingencies indicated that the project did not cause voltage drops of 5% or more from the pre-project levels, or cause the PG&E system to fail to meet applicable voltage criteria.

# 9. Dynamic Stability Study and Results

Dynamic stability studies were conducted using the 2010 summer peak full loop base cases to ensure that the transmission system remains in operating equilibrium through abnormal operating conditions after the new facility begins operation. The generator dynamic data used for the study can be found shown in Appendix E.

## 9.1 Dynamic Stability Study Scenarios

Disturbance simulations were performed for a study period of up to 20 seconds to determine whether the new facility will create any system instability during the following line and generator outages:

### 9.1.1 Category "B" Contingencies:

1) Full load rejection 401 MW of the proposed Project.

2) A three-phase close-in fault on the Gates – Panoche 230 kV No. 1 Line with normal clearing times. This three-phase fault was modeled on the 230 kV bus at Panoche Substation

3) A three-phase close-in fault on the Los Banos – Panoche 230 kV No. 1 Line with normal clearing times. This three-phase fault was modeled on the 230 kV bus at Panoche Substation

4) A three-phase close-in fault on the Panoche – Kearney 230 kV Line with normal clearing times. This three-phase fault was modeled on the 230 kV bus at Panoche Substation

5) A three-phase close-in fault on the Moss Landing – Panoche 230 kV Line with normal clearing times. This three-phase fault was modeled on the 230 kV bus Line at Panoche Substation

### 9.1.1 Category "C" Contingencies:

1) A three-phase fault on Panoche Substation 230 kV bus with normal clearing time followed by loss of the Panoche-Helm and Panoche-Kearney 230 kV Lines. A three-phase fault on Panoche Substation 230 kV bus with normal clearing time.

2) A three-phase fault on Panoche Substation 230 kV bus with normal clearing time followed by loss of the Gates-Panoche 230 kV No.1 and No.2 Lines.

3) A three-phase fault on Panoche Substation 230 kV bus with normal clearing time followed by loss of the Los Banos-Panoche 230 kV No.1 and No.2 Lines.

4) A three-phase fault on Panoche Substation 230 kV bus with normal clearing time followed by loss of the Panoche-Helm and Panoche-Kearney 230 kV Lines.

## 9.2 Parameters Monitored to Evaluate System Stability Performance

### 9.2.1 Rotor Angle

The rotor angle plots shown in Appendix F provide a measure for determining how the proposed generation units would swing with respect to one another. The plots also provide a measure of how the units would swing with respect to other generation units in the area.

### 9.2.2 Bus Voltage

The bus voltage plots, in conjunction with the relative rotor angle plots, also shown in Appendix F, provide a means of detecting out-of-step conditions. The bus voltage plots are useful in assessing the magnitude and the duration of post disturbance voltage dips and peak-to-peak voltage oscillations. The bus voltage plots also give an indication of system damping and the level to which voltages are expected to recover in steady state conditions.

### 9.2.3 Bus Frequency

The bus frequency plots, also shown in Appendix F, provide information on the magnitude and the duration of post fault frequency swings with the Project in service. These plots indicate the extent of possible over-frequency or under-frequency, which can occur because of the imbalance between the generation and load within an area.

### 9.2.4 Other Parameters

- Generator Terminal Power
- Generator Terminal Voltage
- Generator Rotor Speed
- Generator Field Voltage
- Bus Angle
- Line Flow
- Voltage Spread
- Frequency Spread

### 9.3 Results

Dynamic stability studies were conducted using the 2010 summer peak base cases described in Section 4 and the generator models shown in Appendix E to determine whether the transmission system would maintain operating equilibrium following selected outages.

This Project would have no adverse impact on the stable operation of the transmission system. Dynamic stability studies indicate that the transmission system's transient stability performance would not be significantly impacted by the Project following the selected contingencies. The results of the study are provided in the form of plots in Appendix F.

## 10. Transmission Line Evaluation

Pending final design of the Project generator tie line, some 230 kV line structures may have to be rearranged or rebuilt to avoid multiple line crossings. A detailed evaluation would be included in the Facilities Study

## 11. Substation Evaluation

### 11.1 Overstressed Breakers

Using the results of the System Protection Study in Section 7, the substation evaluation identified one (1) 115 kV breaker and two (2) 230 kV breakers at Panoche Substation which the addition of the Project would exacerbate the overstressed condition.

Table 11-1 summarizes the breaker fault duties and the actual percent increases for these breakers.

Table 11-1: Overstressed Breaker Evaluations at Panoche Area Substations

| Substation & Breaker # | Interruptible Rating (Amps) | Before Panoche EC Project (Amps) | Before % | After Panoche EC Project (Amps) | After % | Increase % |
|---|---|---|---|---|---|---|
| Panoche CB 112 | 22,969 | 28,564 | 124% | 29,469 | 128% | 4% |
| Panoche CB 222 | 22,969 | 23,109 | 101% | 25,564 | 111% | 10% |
| Panoche CB 322 | 22,969 | 23,600 | 103% | 26,057 | 113% | 10% |

PG&E uses the following policy to allocate breaker replacement responsibility for projects that overstress or increase the level of overstress[2] on existing circuit breakers:

- If a breaker is not overstressed and a project results in an overstressed condition of the breaker.
- If a breaker is already overstressed and a project increases the overstress by 5% or more, or the overstress level exceeds 25%.

Although this Project increases the overstress on Panoche CBs 112, 222, and 322 beyond 5% or to an overall overstress level higher than 25%, project P0406 with a superior queue position and an earlier online date is currently responsible for replacing these three breakers. However, should this project not materialize, the IC may be responsible for replacing these breakers.

## 11.2 Bus Loading Evaluation

Bus loading analysis was performed on the Panoche 230 kV Bus to identify any bus overloads that would occur with the addition of the Project. The Panoche 230 kV Bus is comprised of 2300 kcmil Aluminum conductors, which has a rating of 1239 Amps (Normal) and 1482 Amps (Emergency), and are large enough to accommodate the addition of the Project.

## 11.3 Interconnection Feasibility Evaluation

As shown in Section 2, the study assumed the Project to be interconnecting to the Panoche 230 kV Bus. Initial inspection determines the interconnection to be technically feasible. The IFAS will determine the full impacts of the direct interconnection proposal.

## 11.4 Operational Overload

CAISO has identified that, during real time, flows are high enough to overload the Panoche 230/115 kV No. 1 Transformer if the Panoche 230/115 kV No. 2 Transformer is not available. In the past, CAISO has mitigated this overload with reducing generation output. The interconnection of the Project on the 230 kV bus at Panoche Substation will make this situation worse. The IC needs to be aware of the high possibility of being curtailed by the CAISO due to congestion in the local area.

[2] Overstressed Circuit Breaker – The percent of overstress, or level of overstress, is the percent of maximum fault current above the breaker's nameplate rating. For example, a breaker rated at 40,000 amps symmetrical current interrupting a 44,000 amp symmetrical fault is overstressed by 10%.

# 12. Mitigation

Mitigation alternatives have been developed for the normal and Category "B" emergency overloads. This section presents alternatives available for mitigating normal and Category "B" emergency overloads identified in Section 6.

For CAISO Category "C" outages (according to WECC reliability criteria), the emergency overloads may be mitigated by load shedding or generation dropping. PG&E, CAISO, or both may require new generators to take part in and be responsible for the costs of operating procedures and/or Special Protection Schemes (SPS) to mitigate these Category "C" emergency overloads caused by the Project.

The following tables summarize the worst normal (Table 12-1), Category "B" emergency (Table 12-2), and Category "C" emergency (Table 12-3) overloads identified in Section 6. Pre-project overloads are shown as shaded in the table.

Table 12-1: Worst Normal Overloads

| Component | Rating (Amps) | Pre- Project Loading (Amps \|%Rating) | | Post-Project Loading (Amps \|%Rating) | | % Change from Pre-Project Loading | Mitigation |
|---|---|---|---|---|---|---|---|
| 2010 Summer Peak | | | | | | | |
| Borden – Gregg 230 kV Line | 675 | 776 | 115% | 807 | 119% | +4% | 12.1.1 |

Table 12-2: Worst Category "B" Emergency Overloads

| Over Loaded Component | Contingency | Rating (Amps) | Pre- Project Loading (Amps \|%Rating) | | Post-Project Loading (Amps \|%Rating) | | % Change from Pre-Project Loading | Mitigation |
|---|---|---|---|---|---|---|---|---|
| 2010 Summer Peak | | | | | | | | |
| Wilson – Gregg 230 kV Line (Storey 1 – Gregg) | Wilson - Borden 230 kV Line and Melones Unit 1 | 793 | 765 | 96% | 817 | 103% | +7% | 12.2.1 |
| Borden – Gregg 230 kV Line | Wilson - Gregg 230 kV Line and Melones Unit 1 | 793 | 824 | 104% | 872 | 110% | +6% | 12.3.1 |
| Oro Loma – Canal #1 70 kV Line (Oro Loma – Dos Palos) | Los Banos - Livingston Jct - Canal 70 kV Line | 282 | 297 | 105% | 302 | 107% | +2% | 12.3.2 |
| 2010 Spring Peak | | | | | | | | |
| Helm – Kerman 70 kV Line (Agrico Jct – Kerman) | Gregg - Herndon #1 230 kV Line and Helms Unit 1 | 379 | 384 | 101% | 396 | 104% | +3% | 12.3.3 |
| Kearney – Kerman 70 kV Line | Kearney 230/70 kV Bank 2 | 379 | 444 | 117% | 447 | 118% | +1% | 12.3.4 |

Table 12-3: Worst Category "C" Emergency Overloads

| Over Loaded Component | Contingency | Rating (Amps) | Pre- Project Loading (Amps \|%Rating) | | Post-Project Loading (Amps \|%Rating) | | % Change from Pre-Project Loading | Mitigation |
|---|---|---|---|---|---|---|---|---|
| 2010 Summer Peak | | | | | | | | |
| Tivy Valley – Reedley 70 kV Line | Borden - Gregg and Wilson - Gregg 230 kV Lines | 298 | 281 | 94% | 299 | 101% | +7% | 12.4.1 |
| Borden – Gregg 230 kV Line | Ashlan 230 kV Bus | 793 | 854 | 108% | 884 | 111% | +3% | 12.4 |
| Panoche – Oro Loma 115 kV Line (Panoche Jct – Hammonds) | Los Banos 70 kV Bus | 608 | 718 | 118% | 745 | 123% | +5% | 12.4 |
| Wilson – LeGrand 115 kV Line | Borden - Gregg and Wilson - Gregg 230 kV Lines | 512 | 569 | 111% | 625 | 122% | +11% | 12.4 |
| 2010 Summer Off-Peak | | | | | | | | |
| Coppermine – Tivy Valley 70 kV Line | Sanger 115 kV Bus | 298 | 294 | 99% | 300 | 101% | +2% | 12.4.2 |
| Wilson – Oro Loma 115 kV Line (LeGrand Jct – Wilson) | Herndon - P0429 and Gates - Gregg 230 kV Lines | 398 | 383 | 96% | 423 | 106% | +10% | 12.4.3 |
| Herndon – Ashlan 230 kV Line | Gregg - Herndon #1 and #2 230 kV Lines | 851 | 915 | 108% | 980 | 115% | +7% | 12.4 |
| LeGrand – Dairyland 115 kV Line | Herndon - P0429 and Gates - Gregg 230 kV Lines | 398 | 399 | 100% | 442 | 111% | +11% | 12.4 |
| McCall – Sanger #3 115 kV Lines | McCall - Sanger #1 and #2 115 kV Lines | 974 | 1262 | 130% | 1281 | 132% | +2% | 12.4 |
| Tivy Valley – Reedley 70 kV Line | Sanger 115 kV Bus | 298 | 324 | 109% | 330 | 111% | +2% | 12.4 |

## 12.1 Mitigating Pre-project Normal Overloads

### 12.1.1 Borden – Gregg 230 kV Line

| | | | |
|---|---|---|---|
| Limiting Factor | | 500 Holo Cu @ 2 fps wind speed rating: 675 Amps Normal (6 miles) | |
| Pre-project Normal Loading | 776 Amps (115%) | Post-project Normal Loading | 807 Amps (119%) |
| Worst Contingency | | 2010 Summer Peak | |

**Overload Mitigation:** This line overloaded also as a result of a generation Project P0507 with a superior queue position and an earlier online date. Project P0507 has been assigned the responsibility for mitigating this overload. Should Project P0507 not materialize, the IC may be responsible for mitigating this overload.

## 12.2 Mitigating New Category "B" Emergency Overloads

### 12.2.1 Wilson - Gregg 230 kV Line (Storey 1 – Gregg)

| | | | |
|---|---|---|---|
| Limiting Factor | | 500 Holo Cu at 2 fps wind speed rating: 793 Amps Emergency (1.0 mile) | |
| Pre-project Emergency Loading | 765 Amps (96%) | Post-project Emergency Loading | 817 Amps (103%) |
| Worst Contingency | | Wilson - Borden 230 kV Line and Melones Unit 1 | |
| Overload Condition | | 2010 Summer Peak | |

**Overload Mitigation:** Re-conductor 1.0 mile of the Wilson – Gregg 230 kV Line with conductors capable of handling 850 Amps or higher. Substation terminal equipment will also be upgraded to match or exceed the ampacity rating of the new conductors.

## 12.3 Mitigating Pre-project Category "B" Emergency Overloads

### 12.3.1 Borden – Gregg 230 kV Line

| | | | |
|---|---|---|---|
| Limiting Factor | | 500 Holo Cu @ 2 fps wind speed rating: 793 amps emergency (6 miles) | |
| Pre-project Emergency Loading | 824 Amps (104%) | Post-project Emergency Loading | 872 Amps (110%) |
| Worst Contingency | | Wilson - Gregg 230 kV Line and Melones Unit 1 | |
| Overload Condition | | 2010 Summer Peak | |

**Overload Mitigation**: See Section 12.1.1

### 12.3.2 Oro Loma – Canal No.1 70 kV Line (Oro Loma – Dos Palos)

| | | | |
|---|---|---|---|
| Limiting Factor | | 1/0 Cu @ 2 fps wind speed rating: 282 amps emergency (2.7 miles) | |
| Pre-project Emergency Loading | 297 Amps (105%) | Post-project Emergency Loading | 302 Amps (107%) |
| Worst Contingency | | Los Banos - Livingston Jct - Canal 70 kV Line | |
| Overload Condition | | 2010 Summer Peak | |

**Overload Mitigation:** This line overloaded also as a result of a generation Project P0507 with a superior queue position and an earlier online date. Project P0507 has been assigned the responsibility for mitigating this overload. Should Project P0507 not materialize, the IC may be responsible for mitigating this overload.

### 12.3.3 Helm-Kerman 70 kV Line (Agrico-Kerman)

| | | | |
|---|---|---|---|
| Limiting Factor | | 3/0 Cu @ 2 fps wind speed rating: 379 amps emergency (6 miles) | |
| Pre-project Emergency Loading | 384 Amps (101%) | Post-project Emergency Loading | 396 Amps (104%) |
| Worst Contingency | | Gregg-Herndon #1 230 kV Line and Helms Unit 1 | |
| Overload Condition | | 2010 Spring Peak | |

**Overload Mitigation:** This line overloaded also as a result of a generation Project P0516 with a superior queue position and an earlier online date. Project P0516 has been assigned the responsibility for mitigating this overload. Should Project P0516 not materialize, the IC may be responsible for mitigating this overload.

### 12.3.4 Kerman-Kearney 70 kV Line

| | | | |
|---|---|---|---|
| Limiting Factor | | 3/0 Cu @ 2 fps wind speed rating: 379 amps emergency (11 miles) | |
| Pre-project Emergency Loading | 444 Amps (117%) | Post-project Emergency Loading | 447 Amps (1118%) |
| Worst Contingency | | Kearney-230/70 Bank 2 | |
| Overload Condition | | 2010 Spring Peak | |

**Overload Mitigation:** This line overloaded also as a result of a generation Project P0516 with a superior queue position and an earlier online date. Project P0516 has been assigned the responsibility for mitigating this overload. Should Project P0516 not materialize, the IC may be responsible for mitigating this overload.

## 12.4 Mitigating Category "C" Emergency Overloads

For CAISO Category "C" outages (according to WECC reliability criteria), the emergency overloads may be mitigated by load shedding or generation dropping. PG&E or CAISO or both may require new generators to take part in and be responsible for the costs of operating procedures and/or Special Protection Schemes (SPS) for the Category "C" emergency overloads caused by the Project.

### 12.4.1 Tivy Valley-Reedley 70 kV Line

**Overload Mitigation:** Install Special Protection Scheme (SPS).

### 12.4.2 Coppermine-Tivy Valley 70 kV Line

**Overload Mitigation:** Install Special Protection Scheme (SPS).

#### 12.4.3 Wilson – Oro Loma 115 kV Line (LeGrand Jct – Wilson)

**Overload Mitigation:** Install Special Protection Scheme (SPS).

### 12.5 Overstressed Breakers

As summarized in Section 11.1, a project with a superior queue position and an earlier online date may be responsible for replacing these three breakers. It is important to note that should this project not materialize, the IC may be responsible for replacing these breakers.

## 13. Environmental Evaluation/ Permitting

### 13.1 CPUC General Order 131-D

Pacific Gas and Electric Company (PG&E) is subject to the jurisdiction of the California Public Utilities Commission (CPUC); and must comply with CPUC General Order 131-D (Order) on the construction, modification, alteration, or addition of all electric transmission facilities (i.e., lines, substations, switchyards, etc.). This includes 230 kV facilities to be constructed by others and deeded to PG&E. The Order requires PG&E to obtain a Certificate of Pubic Convenience and Necessity (CPCN) from the CPUC if the PG&E facilities being constructed are designed for immediate or eventual operation at 200 kV or more. Projects with 230 kV facilities that are excepted from obtaining a CPCN are those involving the replacement of existing power line facilities or supporting structures with equivalent facilities or structures, the minor relocation of existing facilities, the conversion of existing overhead lines (greater than 200 kV) to underground, or the placing of new or additional conductors, insulators, or their accessories on or replacement of supporting structures already built. Obtaining a CPCN can take as much as 18 months or more if the CPUC needs to conduct its own environmental evaluation pursuant to the California Environmental Quality Act (CEQA). PG&E recommends including PG&E's interconnection facilities in the local or CEC's CEQA process, which may allow a shortened CPCN process should a CPCN be necessary.

Please see Section III, B.1.(f) in General Order 131-D. This document can be found in the CPUC's web page at:

http://www.cpuc.ca.gov/PUBLISHED/GENERAL_ORDER/589.htm

### 13.2 CPUC Section 851

Pacific Gas and Electric Company (PG&E) is subject to the jurisdiction of the California Public Utilities Commission (CPUC) and must comply with Public Utilities Code Section 851, which among other things requires CPUC approval of leases and licenses to use PG&E property. This includes rights-of-way granted to third parties for interconnection facilities. Obtaining CPUC approval for a Section 851 application can take several months, and requires

compliance with the California Environmental Quality Act (CEQA). PG&E recommends that Section 851 issues be identified as early as possible so that the necessary application can be prepared and processed.

## 14. Study Updates

This System Impact Study is performed according to the assumptions shown in the Sections titled "Study Assumptions" and "Power Flow Study Base Case". In the event such that these assumptions are changed, a re-study according to the LGIP may be required to re-evaluate the Project's impact on PG&E's transmission grid. The IC would be responsible for paying for any such updating study.

## 15. Stand-by Power

This study does not address any requirements for stand-by power that the Project may require. The IC should contact their Generation Interconnection Services Representative regarding this service.

**Note: The IC is urged to contact their Generation Interconnection Services Representative promptly regarding stand-by service in order to ensure its availability for the Project's start-up date.**