Taylor O. Miller
Senior Environmental Counsel

925 L Street, Suite #650
Sacramento, CA 95814

Tel: 916-492-4248
Fax: 916-448-1213
tmiller@sempra.com

June 26, 2009

DOCKET
07-AFC-6
DATE JUN 26 2009
RECD. JUN 26 2009

VIA EMAIL

Mr. Mike Monasmith
Project Manager CECP
California Energy Commission
mike.monasmith@energy.state.ca.us

Re: San Diego Gas & Electric (SDG&E) Comments on the Preliminary Staff Assessment for Carlsbad Energy Center Project, Docket 07-AFC-6

Dear Mr. Monasmith:

Enclosed for filing with the Docket Office are copies of the various drawings prepared by SDG&E to further detail the interconnection activities described in our letter to you of May 14, 2009.

Thank you very much for your cooperation in this matter.

Sincerely yours,

Taylor O. Miller

Cc: Docket Office
John McKinnsey, Esq.
Richard Ratliff, Esq.

NORTH

138KV LINE
138KV LINE
138KV LINE
138KV LINE
230KV LINE
230KV LINE
230KV LINE
230KV LINE

425'-0"
738'-0"
313'-0"
197'-0"
420'-0"
20'-0"
20'-0"
20'-0"
20'-0"
20'-0"
25'-0"
133'-0"

EAST MAIN BUS
WEST MAIN BUS
EAST MAIN BUS
WEST MAIN BUS

A
B
C

8E 7E 6E 5E 4E 2E 1E
8W 7W 6W 5W 4W 2W 1W
4T 3T 2T 1T
4E 3E 2E 1E
4W 3W 2W 1W

BANK 60
230/138KV
392 MVA

EAST SL&P
WEST SL&P

CONTROL SHELTER
50' X 32'

CAP BK A
CAP BK B
CAP BK C
CAP BK D
CAP BK E
CAP BK F

BK 43
BK 42
BK 41
CAP 40

SWGR 43
SWGR 42
SWGR 41
SWGR 40

ASPHALT DRIVEWAY

207'-0"
233'-0"
89'-0"
112'-0"
460'-0"

30' SLIDE GATE
20' SLIDE GATE
20' SLIDE GATE

CEC SKETCH B1

138KV LINE
12KV DISTRIBUTION TO POSEIDON DESALINATION PLANT
CARLSBAD ENERGY CENTER PROJECT (CECP)
138KV LINE
230KV LINE
230KV LINE

REVISIONS

NO.	WORK DONE	DATE	BY:	APP'D:	NO.	WORK DONE	DATE	BY:	APP'D:	NO.	WORK DONE	DATE	BY:	APP'D:	NO.	WORK DONE	DATE	BY:	APP'D:
															0	NEW DRAWING W.O.	4/3/08	RJS	

SAN DIEGO GAS & ELECTRIC COMPANY
SAN DIEGO, CALIFORNIA

ENCINA EAST SUBSTATION

GENERAL ARRANGEMENT

DRAWN BY: BJV	DATE: 4/2/08	SCALE: 1"=50'	W.O. 983540 REV. 0
CHECKED BY:	DATE:		
APPROVED BY:	DATE:		
CAD NO.: CEC_SKETCH_B1	PLOT SCALE: 1 = 1		

Jun 02, 2009 – 16:57:60

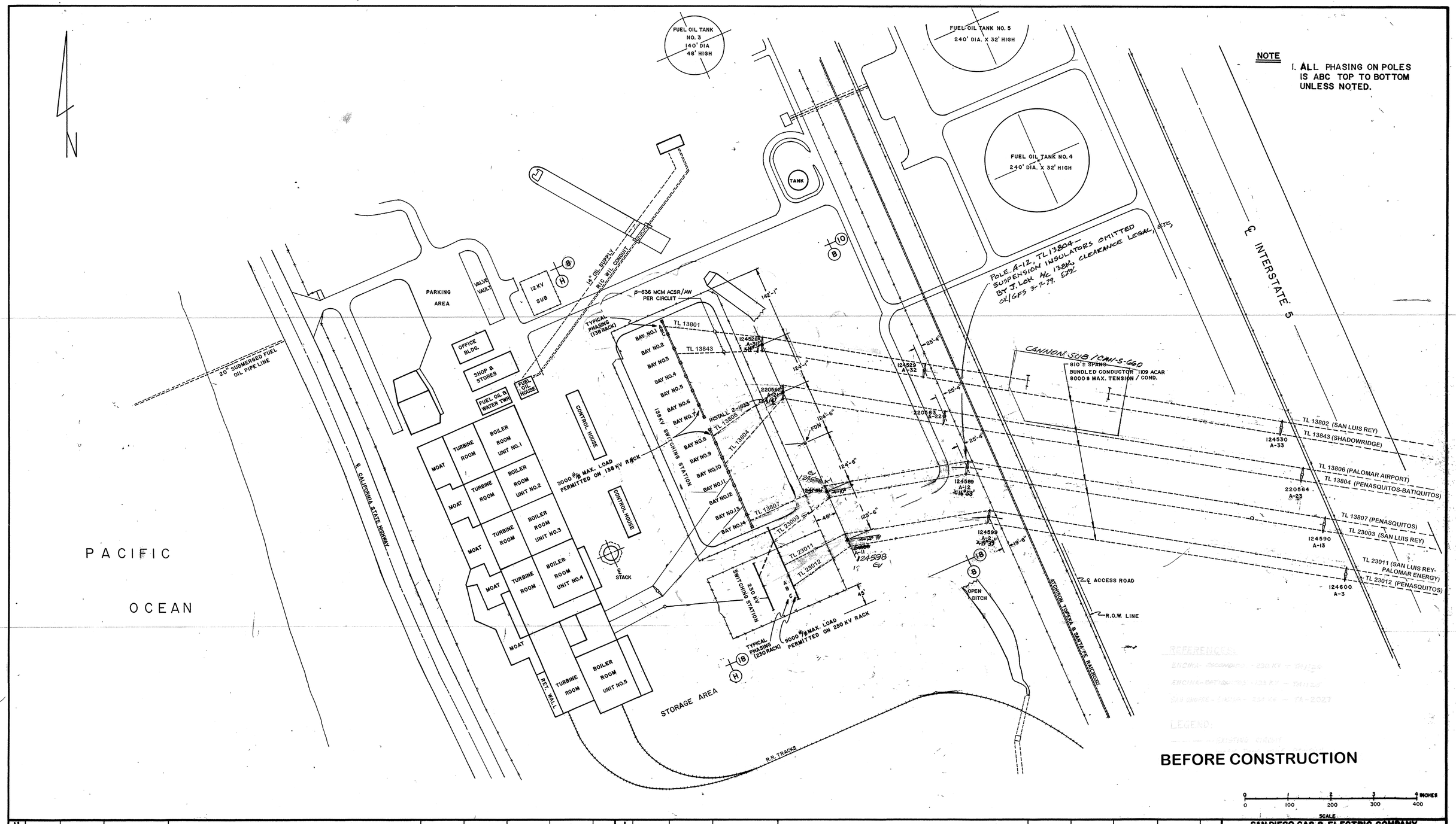

NOTE

1. ALL PHASING ON POLES IS ABC TOP TO BOTTOM UNLESS NOTED.

BEFORE CONSTRUCTION

0 1 2 3 4 INCHES
0 100 200 300 400
SCALE

REV	BUDGET	CONST ORDER	CHANGE	DRAWN	CHECKED	APPROVED	APPROVED	DATE
U								
T								
S								
R								
P								
N								
M								
L								
K								

REV	BUDGET	CONST ORDER	CHANGE	DRAWN	CHECKED	APPROVED	APPROVED	DATE
J								
H								
G								
F								
E								
D	95136	5932133	PHASING CHANGED T/L 23010 ST. POLE 124588 - AS-BUILD	G/OGT				
C	77164	5579720	ADDED SHIELD WIRES, A-1 POLE NO.	IGD	[signature]	[signature]	[signature]	9/19/80
B	77164	5579720	ADDED 23010; DELETE 13803; RELOCATED 13806, 13804, & 13807 RACK SPANS	IGD	[signature]	[signature]	[signature]	8/4/80
A	75138	5912681 REV #1	ORIGINAL	S.F.O. A.L.S.	[signature]	[signature]	[signature]	8/4/78

SAN DIEGO GAS & ELECTRIC COMPANY

ENCINA SUBSTATION

CONNECTING LINE MAP

REFERENCE SEE ABOVE

SHEET 1 OF 1

TD-1112

FORM 126-14284/2

A.A. 11-11-99

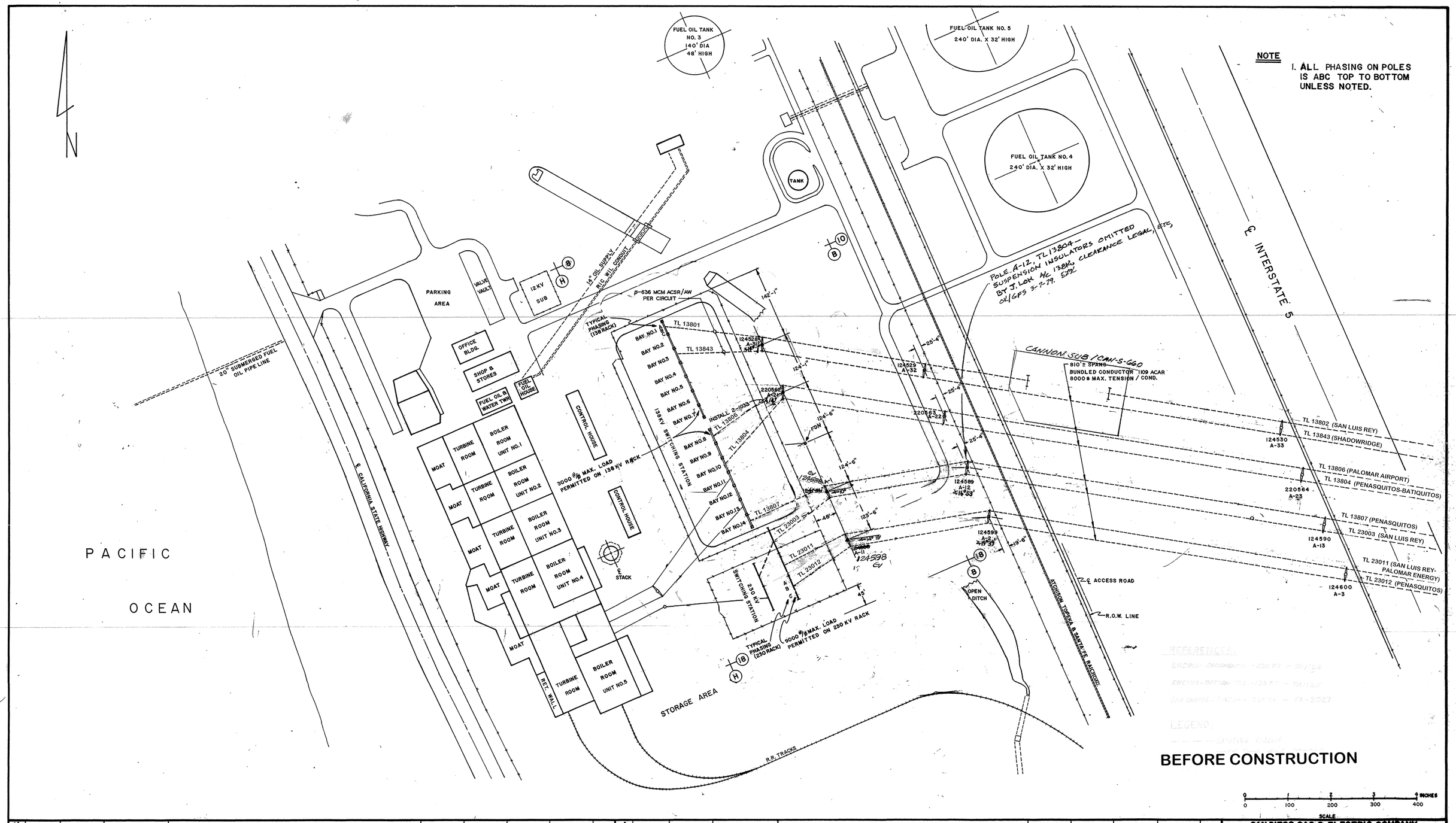

NOTE

1. ALL PHASING ON POLES IS ABC TOP TO BOTTOM UNLESS NOTED.

BEFORE CONSTRUCTION

0 1 2 3 4 INCHES
0 100 200 300 400
SCALE

REV	BUDGET	CONST ORDER	CHANGE	DRAWN	CHECKED	APPROVED	APPROVED	DATE
U								
T								
S								
R								
P								
N								
M								
L								
K								

REV	BUDGET	CONST ORDER	CHANGE	DRAWN	CHECKED	APPROVED	APPROVED	DATE
J								
H								
G								
F								
E								
D	95136	5932133	PHASING CHANGED T/L 23010 ST. POLE 124588 - AS-BUILD	G/OGT				
C	77164	5579720	ADDED SHIELD WIRES, A-1 POLE NO.	IGD	[signature]	[signature]	[signature]	9/19/80
B	77164	5579720	ADDED 23010; DELETE 13803; RELOCATED 13806, 13804, & 13807 RACK SPANS	IGD	[signature]	[signature]	[signature]	8/4/80
A	75138	5912681 REV #1	ORIGINAL	S.F.O. A.L.S.	[signature]	[signature]	[signature]	8/4/78

SAN DIEGO GAS & ELECTRIC COMPANY

ENCINA SUBSTATION

CONNECTING LINE MAP

REFERENCE SEE ABOVE

SHEET 1 OF 1

TD-1112

FORM 126-14284/2

A.A. 11-11-99

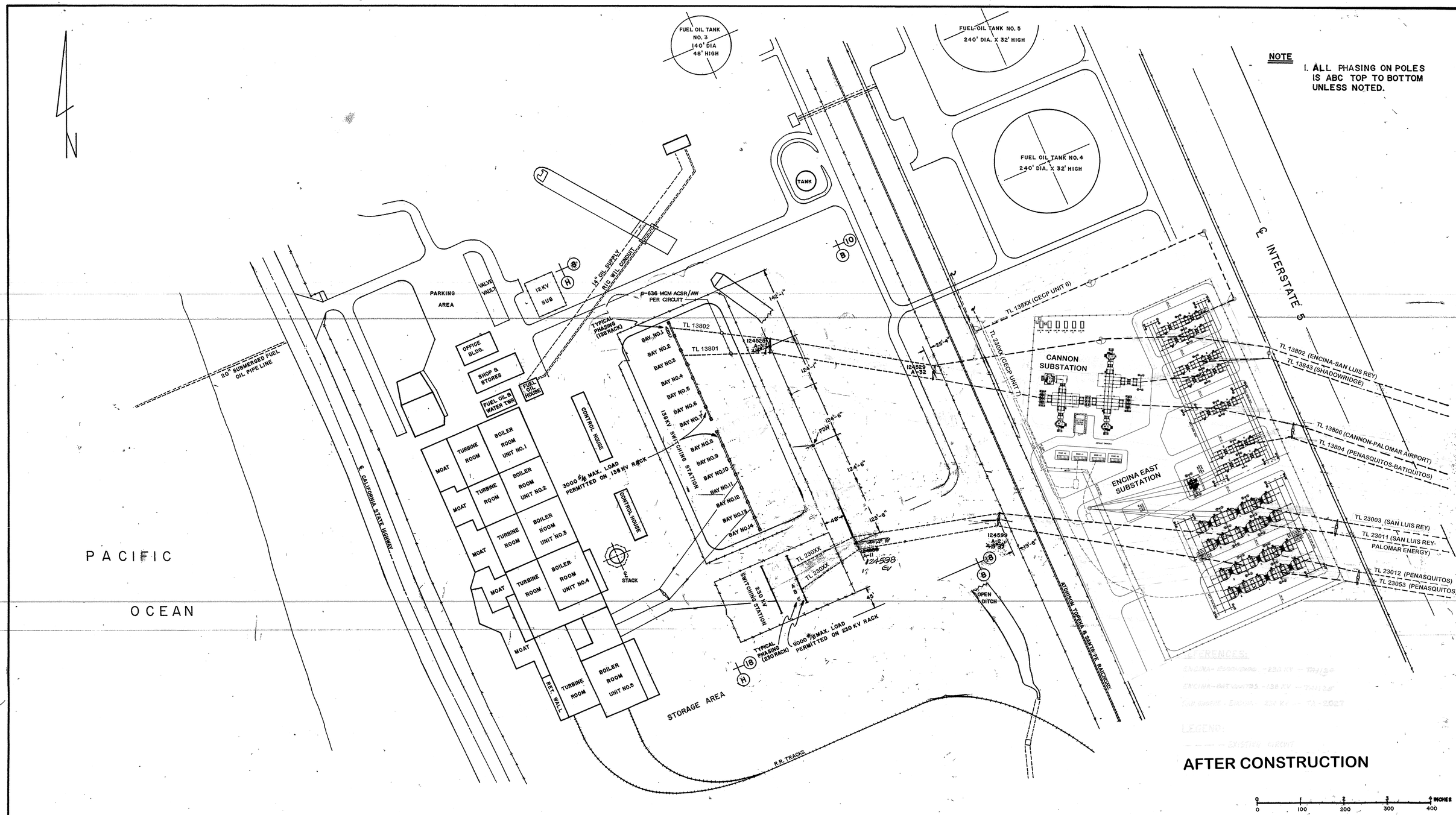

REV		BUDGET	CONST ORDER	CHANGE	DRAWN	CHECKED	APPROVED	APPROVED	DATE
U									
T									
S									
R									
P									
N									
M									
L									
K									

REV		BUDGET	CONST ORDER	CHANGE	DRAWN	CHECKED	APPROVED	APPROVED	DATE
J									
H									
G									
F									
E									
D		95136	5932133	PHASING CHANGED T/L 23010 ST. POLE 124588 - AS-BUILD	G/OGT				
C		77164	5579720	ADDED SHIELD WIRES, A-1 POLE NO.	IGD	[signature]	[signature]	[signature]	7/19/80
B		77164	5579720	ADDED 23010; DELETE 13803; RELOCATED 13806, 13804 & 13807 RACK SPANS	IGD	[signature]	[signature]	[signature]	7/8/80
A		75138	5912681 REV #1	ORIGINAL	S.F.O. A.L.S.	[signature]	[signature]	[signature]	8/4/78

SAN DIEGO GAS & ELECTRIC COMPANY

ENCINA SUBSTATION

CONNECTING LINE MAP

REFERENCE SEE ABOVE

SHEET 1 OF 1

TD-1112

FORM 125-14284/2

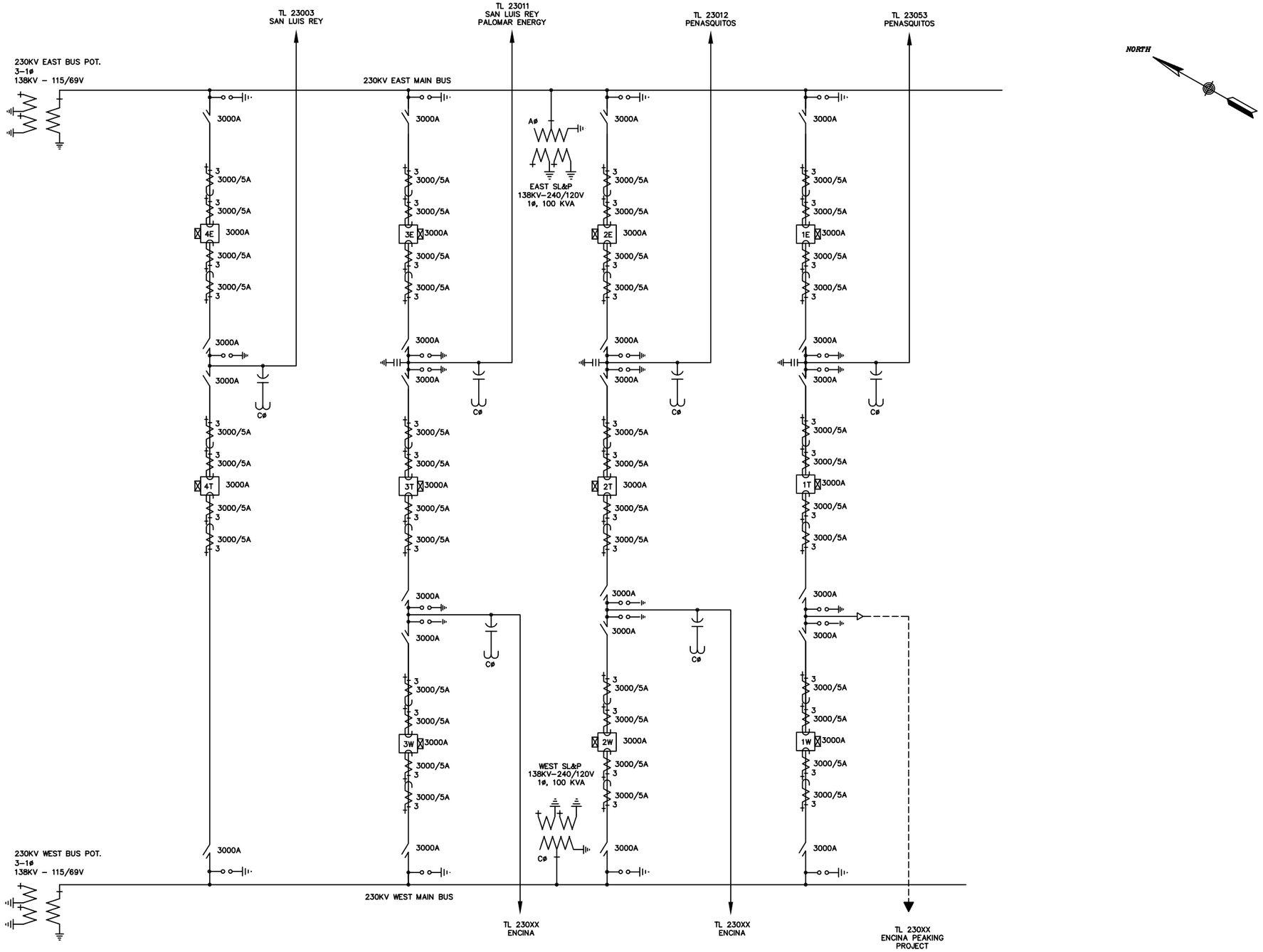

REVISIONS

NO.	WORK DONE	DATE	BY:	APP'D:

NO.	WORK DONE	DATE	BY:	APP'D:

NO.	WORK DONE	DATE	BY:	APP'D:

NO.	WORK DONE	DATE	BY:	APP'D:
0	NEW DRAWING (B&V)		BAV	

SAN DIEGO GAS & ELECTRIC COMPANY
SAN DIEGO, CALIFORNIA

ENCINA EAST SUBSTATION
EQUIPMENT ONE LINE DIAGRAM

DRAWN BY: BAV | DATE: | SCALE: NONE | W.O. | REV: 0
CHECKED BY: | DATE:
APPROVED BY: | DATE:
CAD FILE: | PLOT SCALE: 1=1

EAE-E-31

Apr 25, 2008 - 13:00:53

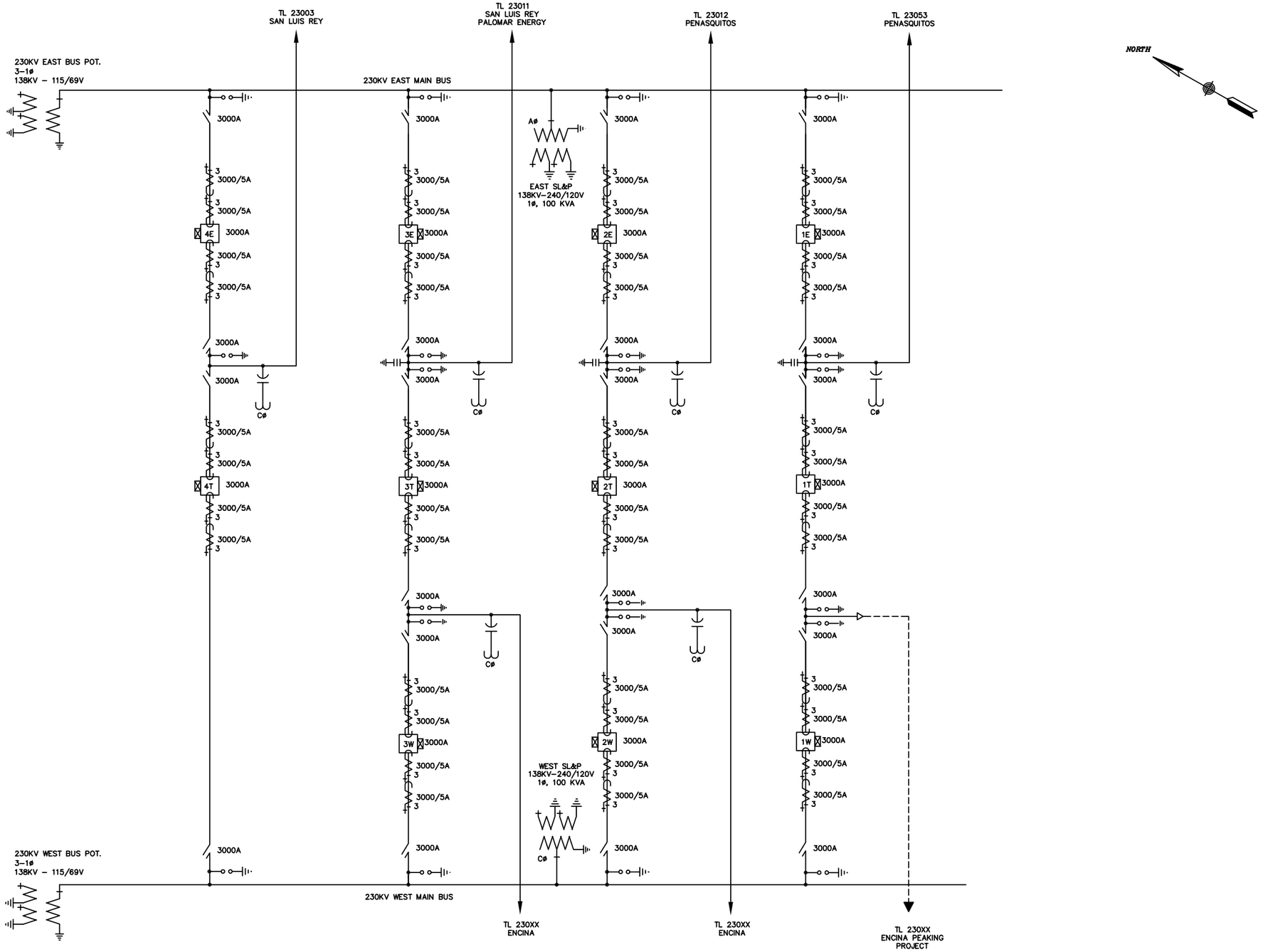

REVISIONS

NO.	WORK DONE	DATE	BY:	APP'D:

NO.	WORK DONE	DATE	BY:	APP'D:

NO.	WORK DONE	DATE	BY:	APP'D:

NO.	WORK DONE	DATE	BY:	APP'D:
0	NEW DRAWING (B&V)		BAV	

SAN DIEGO GAS & ELECTRIC COMPANY
SAN DIEGO, CALIFORNIA

ENCINA EAST SUBSTATION
EQUIPMENT ONE LINE DIAGRAM

DRAWN BY: BAV | DATE: | SCALE: NONE | W.O. | REV: 0
CHECKED BY: | DATE:
APPROVED BY: | DATE:
CAD FILE: | PLOT SCALE: 1=1

EAE-E-31

Apr 25, 2008 - 13:00:53

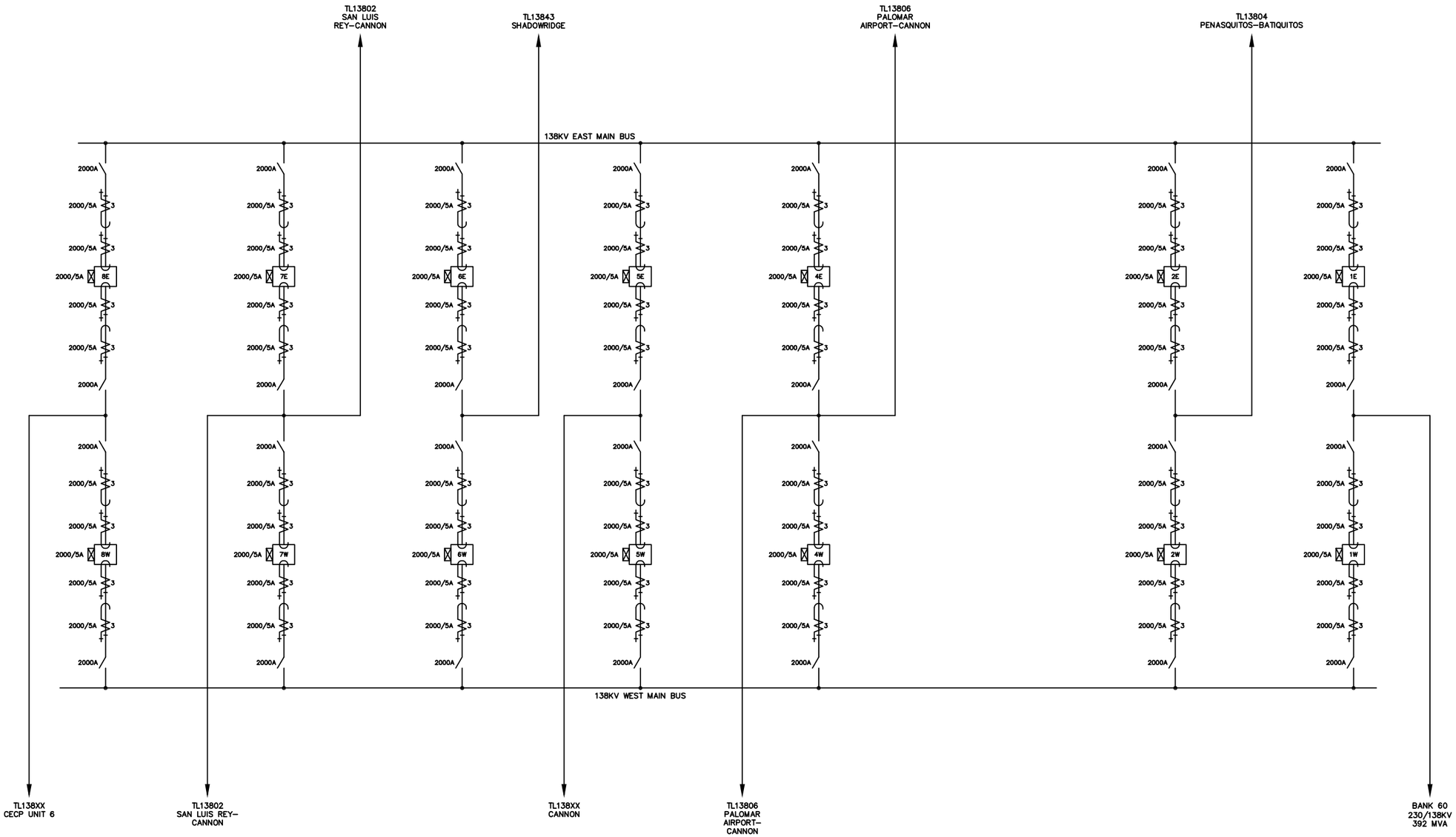

REVISIONS

NO.	WORK DONE	DATE	BY:	APP'D:
0	NEW DRAWING (B&V) W.O. 59BXXX	6/9/09	JCS	

SAN DIEGO GAS & ELECTRIC COMPANY
SAN DIEGO, CALIFORNIA

ENCINA EAST SUBSTATION
138KV ONE LINE DIAGRAM

DRAWN BY: B&V | DATE: 6/9/09 | SCALE: NONE | W.O. | REV: 0
CHECKED BY: | DATE:
APPROVED BY: | DATE:
CAD FILE: EAE32 | PLOT SCALE: 1 = 1

EAE-E-32

SKETCH 1 Jun 09, 2009 – 12:50:38

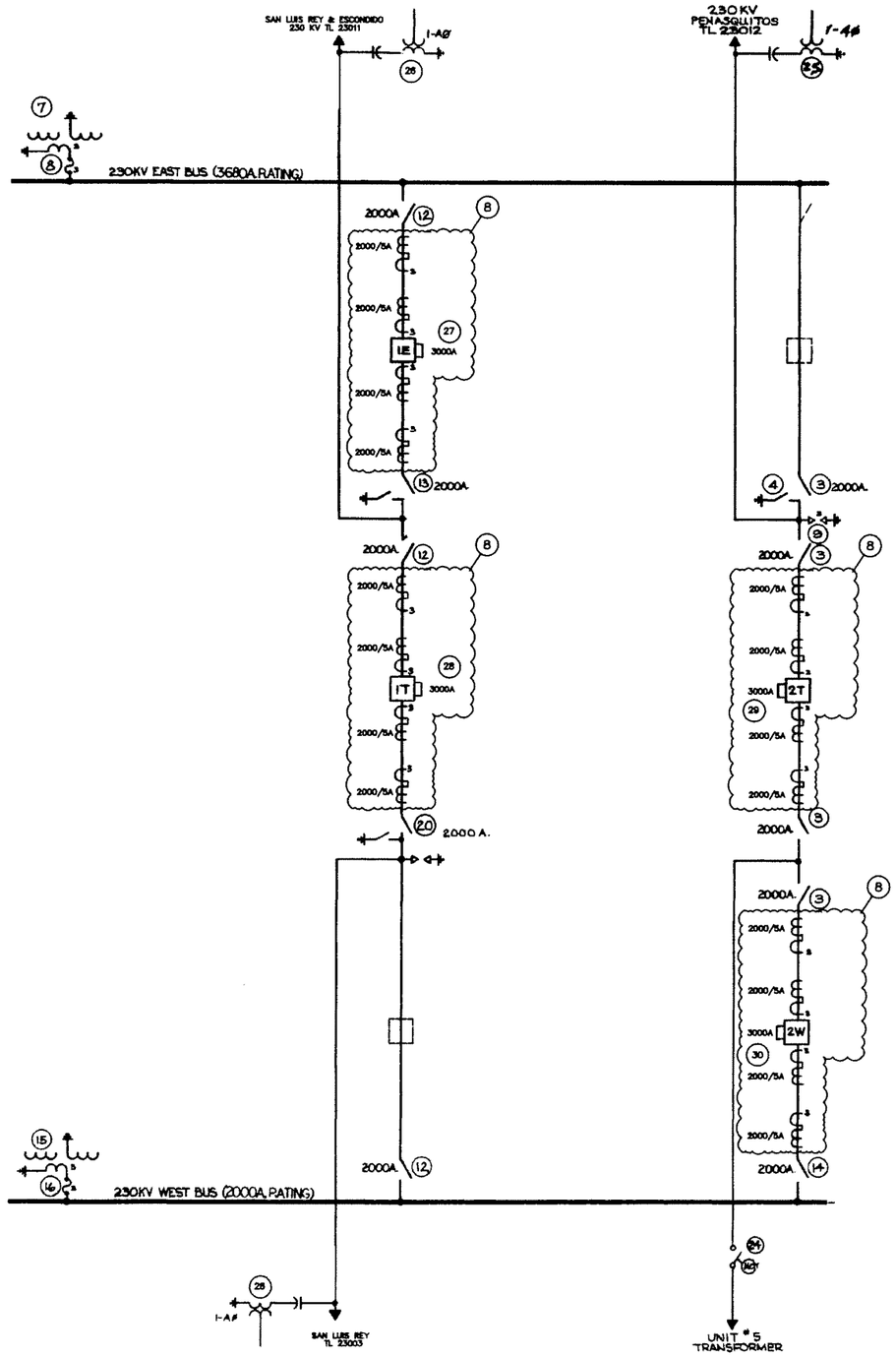

REFERENCES:

(NO) NUMBER IN CIRCLE INDICATES EQUIPMENT LISTED ON THIS DRAWING

230 KV S/L, METERING & RELAYING DIAGRAM — EA230-E-120

BEFORE CONSTRUCTION

REVISIONS

NO.	WORK DONE	DATE	BY:	APP'D:
6	REPLACED 230KV CB'S 1E, 1T, 2W, & 2T W.O. 5980141	10/24/08	pc/CKB	RWH
3	ADD UN. #5 230KV MOD ITEM #84 W.O. 5824680	4/28/98	RGP/WF	RDA
4	REMOVED ITEMS #5 & #8 AND REV'SD TL23012 DEST. FROM "OT" TO "PG" W.O. 5828824	3/28/94	RWH	FJ
5	ADD COUP. CAPAC. TO TL23012 FOR SYNC. W.O. 5830330	3/7/94	DDW/RGG	CAK
6	SCANNED DWG. INTO TITLEBLOCK WITH BARCODE (WAS DWG. 13-EA-E100). W.O. 2558400	3/1/01	MN/ADR	
7	REV'D DEST. TL 23011 TO SAN LUIS REY & ESCONDIDO, REV'D TL 23010 TO TL 23003			
	FROM ENCINA TO SAN LUIS REY, REMOVED ITEM #17 & #22 & CHANGED OUT CCVT'S W.O. 5980293	6/16/01	NW	MDK

SAN DIEGO GAS & ELECTRIC COMPANY
SAN DIEGO, CALIFORNIA

ENCINA SUBSTATION
CIRCUIT DIAGRAM & EQUIPMENT LIST 230KV SUBSTATION

DRAWN BY: DA	DATE: 8/21/74	SCALE: NONE	W.O. 5980293 REV. 8
CHECKED BY: JJT	DATE: 9/10/74		EA230-E-100
APPROVED BY: RTB	DATE: 9/12/74		
CAD NO.: EA230E100	PLOT SCALE: 1 = 1		

Apr 06, 2007 - 13:14:21

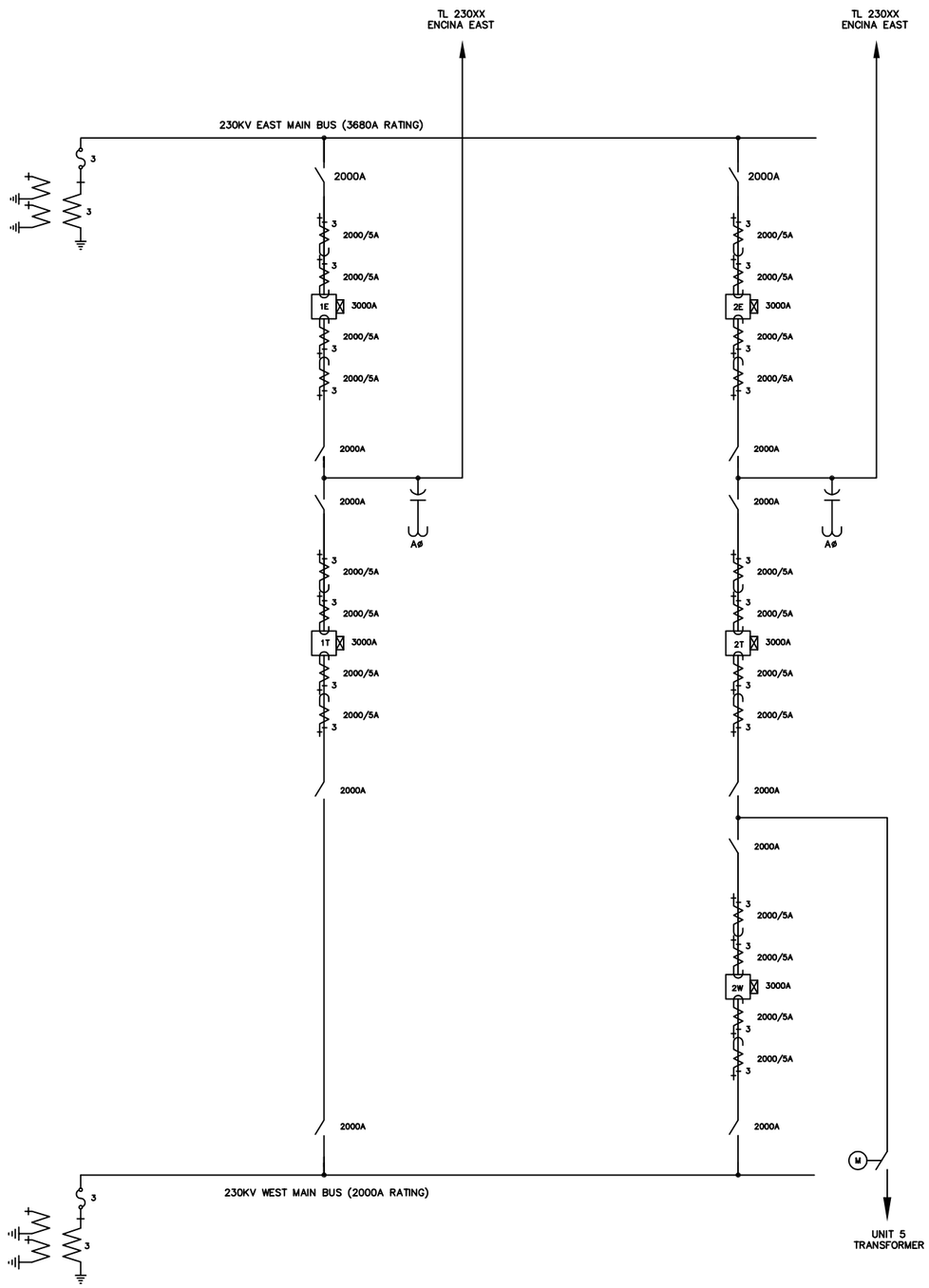

REFERENCE DRAWINGS:
230KV S/L, METERING & RELAYING DIAGRAM — — — — — — — EA230-E-120

AFTER CONSTRUCTION

NO.	WORK DONE	DATE	BY:	APP'D:	NO.	WORK DONE	DATE	BY:	APP'D:

REVISIONS

NO.	WORK DONE	DATE	BY:	APP'D:	NO.	WORK DONE	DATE	BY:	APP'D:
5	REPLACED 230kV CB'S 1E, 1T, 2W, & 2T W.O. 5985141	10/24/06	pp/CKB	RWN	3	ADD UN. #5 230KV MOD ITEM #24 W.O. 5924660	4/25/05	RCP/WP	RDA
					4	REMOVED ITEMS #5 & #6 AND REV'SD TL2301E DEST. FROM "OT" TO "PO" W.O. 5926624	5/25/01	RWN	FJ
					5	ADD COUP. CAPAC. TO TL2301E FOR SYNC. W.O. 5939336	3/7/94	DDW/RGG	CAK
					6	SCANNED DWG. INTO TITLEBLOCK WITH BARCODE (WAS DWG. 15-EA-E100) W.O. 2558405	2/1/01	MN/ADR	
					7	REV'D DEST. TL 2301 TO SAN LUIS REY & ESCONDIDO, REV'D TL 2301O TO TL 23003			
						FROM ENCINA TO SAN LUIS REY, REMOVED ITEM #17 & #22 & CHANGED OUT COVTS			
						W.O. 5985293	6/25/01	NW	MDK

SAN DIEGO GAS & ELECTRIC COMPANY
SAN DIEGO, CALIFORNIA

ENCINA SUBSTATION

CIRCUIT DIAGRAM & EQUIPMENT LIST 230KV SUBSTATION

DRAWN BY: DA	DATE: 8/21/74	SCALE: NONE	W.O. 5980293	REV: 8
CHECKED BY: JJT	DATE: 9/10/74			
APPROVED BY: RTB	DATE: 9/12/74		EA230-E-100	
CAD NO.: EA230E100	PLOT SCALE: 1 = 1			

Sept 04, 2008 – 11:43:56

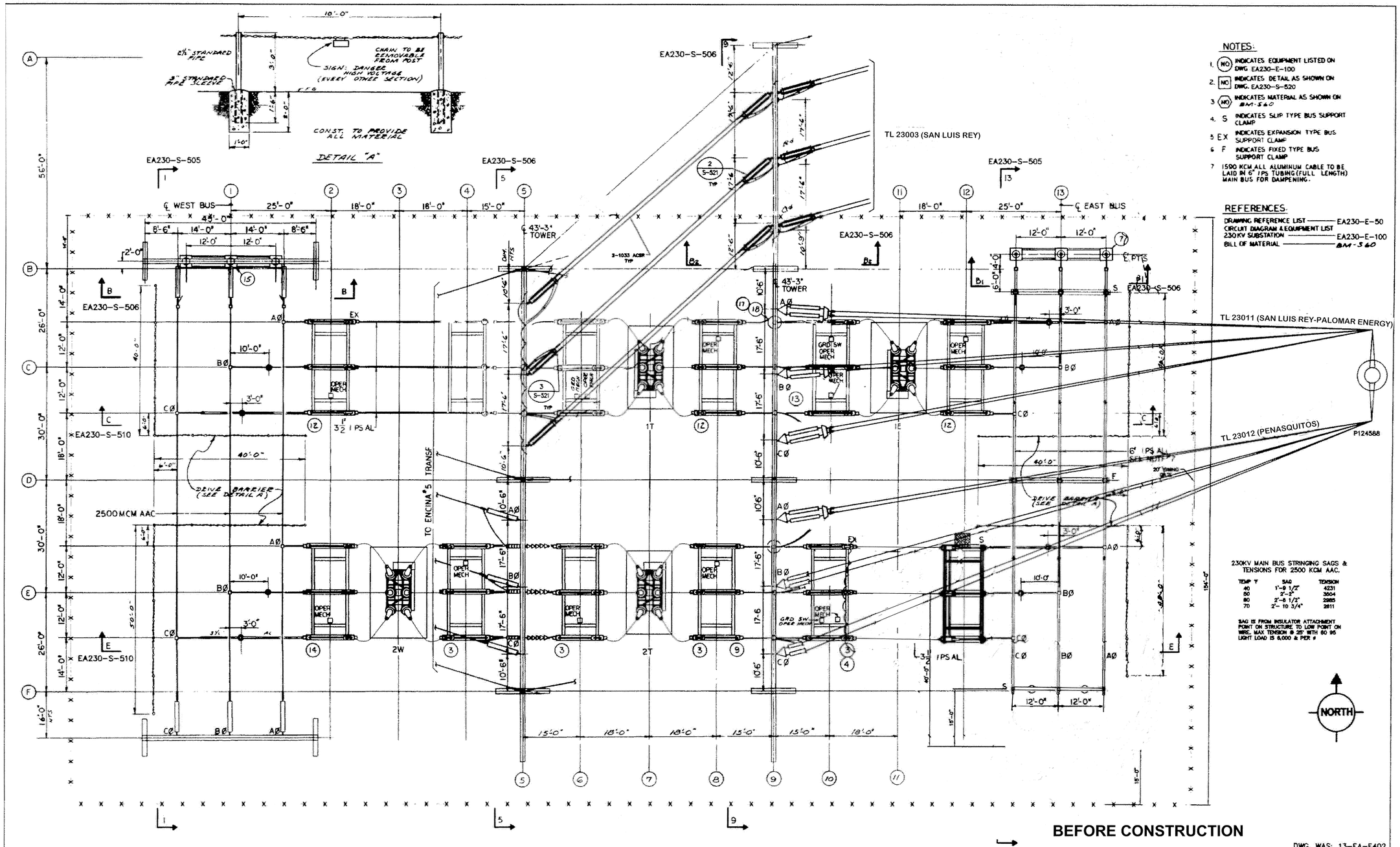

NOTES:

1. (NO) INDICATES EQUIPMENT LISTED ON DWG. EA230-E-100
2. [NO] INDICATES DETAIL AS SHOWN ON DWG. EA230-S-520
3. (NO) INDICATES MATERIAL AS SHOWN ON BM-560
4. S INDICATES SLIP TYPE BUS SUPPORT CLAMP
5. EX INDICATES EXPANSION TYPE BUS SUPPORT CLAMP
6. F INDICATES FIXED TYPE BUS SUPPORT CLAMP
7. 1590 KCM ALL ALUMINUM CABLE TO BE LAID IN 6" IPS TUBING (FULL LENGTH) MAIN BUS FOR DAMPENING.

REFERENCES:

DRAWING REFERENCE LIST — EA230-E-50
CIRCUIT DIAGRAM & EQUIPMENT LIST 230KV SUBSTATION — EA230-E-100
BILL OF MATERIAL — BM-560

230KV MAIN BUS STRINGING SAGS & TENSIONS FOR 2500 KCM AAC.

TEMP °F	SAG	TENSION
40	1'-9 1/2"	4231
50	2'-2"	3504
60	2'-6 1/2"	2985
70	2'-10 3/4"	2611

SAG IS FROM INSULATOR ATTACHMENT POINT ON STRUCTURE TO LOW POINT ON WIRE. MAX TENSION @ 25° WITH 60 95 LIGHT LOAD IS 6,000 & PER #

BEFORE CONSTRUCTION

DWG. WAS: 13-EA-E402

REVISIONS

NO.	WORK DONE	DATE	BY:	APP'D:
6	REVISED DIM. OF BEAM PULL-OFF SECT. B-B	4/16/81	JL	LA/DO
8	ADD INSUL. & SW1 W.O. 8824880	4/4/86	LEA	RDA
7	ADDED OCVT W.O. 8830330	3/21/84	LA	OAK
9	SCANNED DWG. INTO TITLEBLOCK WITH BARCODE AND CHANGE DWG. # W.O. 8880283	11/12/08	MN/CJS	
8	REPLACE 230KV BREAKERS W.O. 8886141	2/26/07	CJS	BCC
10	ADDED 230KV BREAKER 3E, 230KV TERM STAND & MOVED EXISTING BUS. WO 8884482	8/24/08	RJS	
	SUPPORT 6' NORTH. ADDED TWIN 1033 ACSR BETWEEN EAST AND WEST BAYS. (B&V)			

SAN DIEGO GAS & ELECTRIC COMPANY
SAN DIEGO, CALIFORNIA

ENCINA SUBSTATION
PLAN 230KV SUBSTATION

DRAWN BY: DA | DATE: 8/22/74 | SCALE: 3/32"=1' | W.O. 8886141 | REV. 10
CHECKED BY: WEP | DATE: 1/13/75
APPROVED BY: | DATE:
CAD NO.: EA230S502 | PLOT SCALE: 1 = 1

EA230-S-502

Aug 11, 2008 - 12:30:01

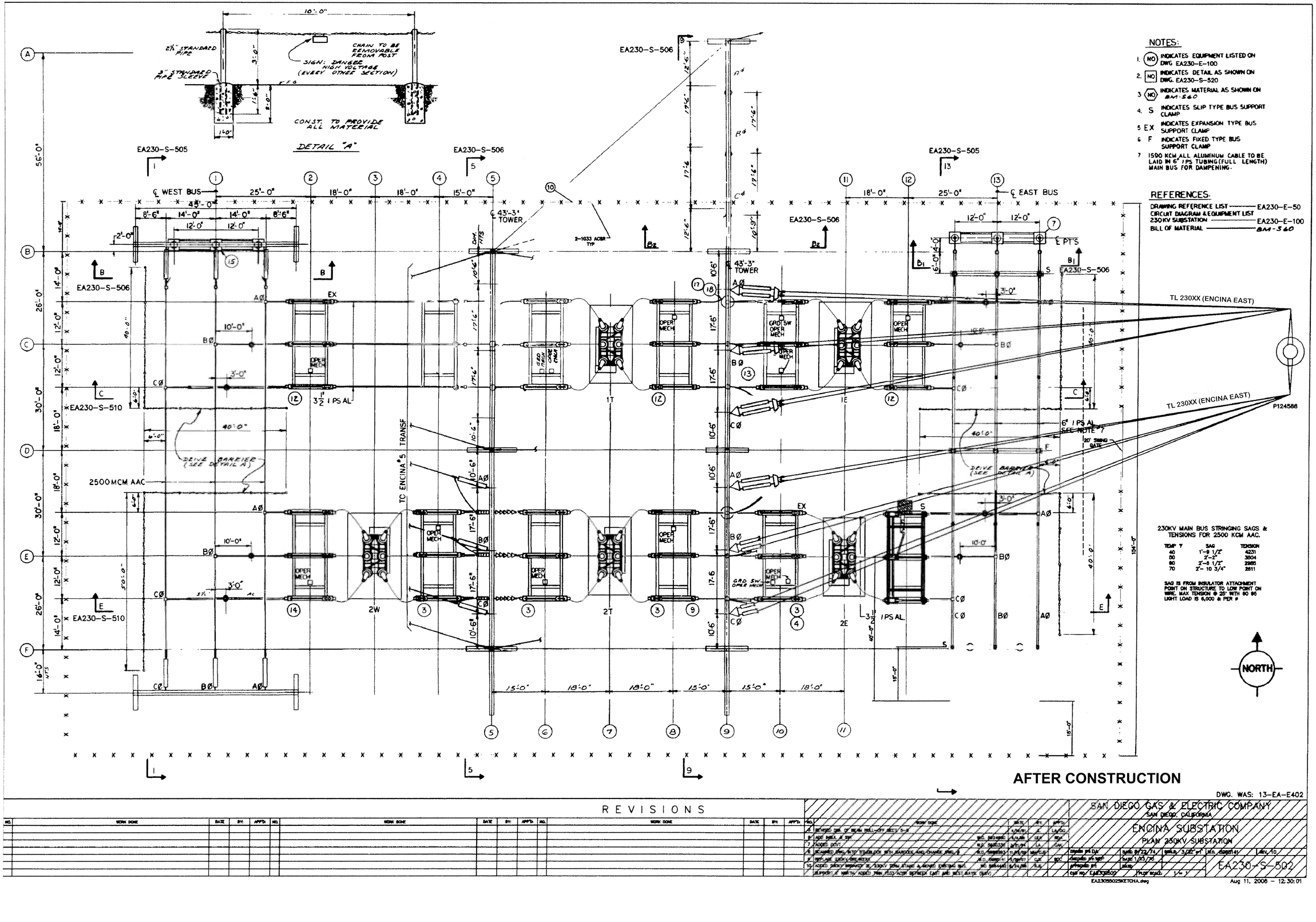

NOTES:

1. (NO) INDICATES EQUIPMENT LISTED ON DWG EA230-E-100
2. [NO] INDICATES DETAIL AS SHOWN ON DWG. EA230-S-520
3. ⟨NO⟩ INDICATES MATERIAL AS SHOWN ON BM-S60
4. S INDICATES SLIP TYPE BUS SUPPORT CLAMP
5. EX INDICATES EXPANSION TYPE BUS SUPPORT CLAMP
6. F INDICATES FIXED TYPE BUS SUPPORT CLAMP
7. 1590 KCM ALL ALUMINUM CABLE TO BE LAID IN 6" I PS TUBING (FULL LENGTH) MAIN BUS FOR DAMPENING.

REFERENCES.

DRAWING REFERENCE LIST ——— EA230-E-50
CIRCUIT DIAGRAM & EQUIPMENT LIST 230KV SUBSTATION ——— EA230-E-100
BILL OF MATERIAL ——— BM-S60

AFTER CONSTRUCTION

DWG. WAS: 13-EA-E402

REVISIONS

NO.	WORK DONE	DATE	BY:	APP'D.
A	REVISED SIZE OF MEDIA TABLE-ADDED NOTE 5-8	1/14/75	E	LA DU
B	ADD SHELL & DIM	8/22/74	GLV	RDW
7	ADDED DIM	9/3/74	GLV	DMW
8	REVISED DWG. NOTE TO ADD DIM WITH EXCEPTION AND CHANGE DWG. #	8/5/74	GLV	DMW
9	REVISED SIZE & DETAILS	8/5/74	GLV	DMW
10	ADDED SECOND SECTION TO 230KV BUS STRING & REVISED EXISTING SEC.	8/26/74	G.L.	RDW

DRAWN BY DM	DATE 8/22/74
CHECKED BY RDW	DATE 1/25/75
APPROVED BY	DATE
CAD REF. EA230S02	PROJ. NO.

SCALE 3/32" = 1'

SAN DIEGO GAS & ELECTRIC COMPANY
SAN DIEGO, CALIFORNIA

ENCINA SUBSTATION
PLAN 230KV SUBSTATION

FILE NO. EA230-S-502
REV. 10

EA230S025KETCHA.dwg
Aug 11, 2006 - 12:30:01

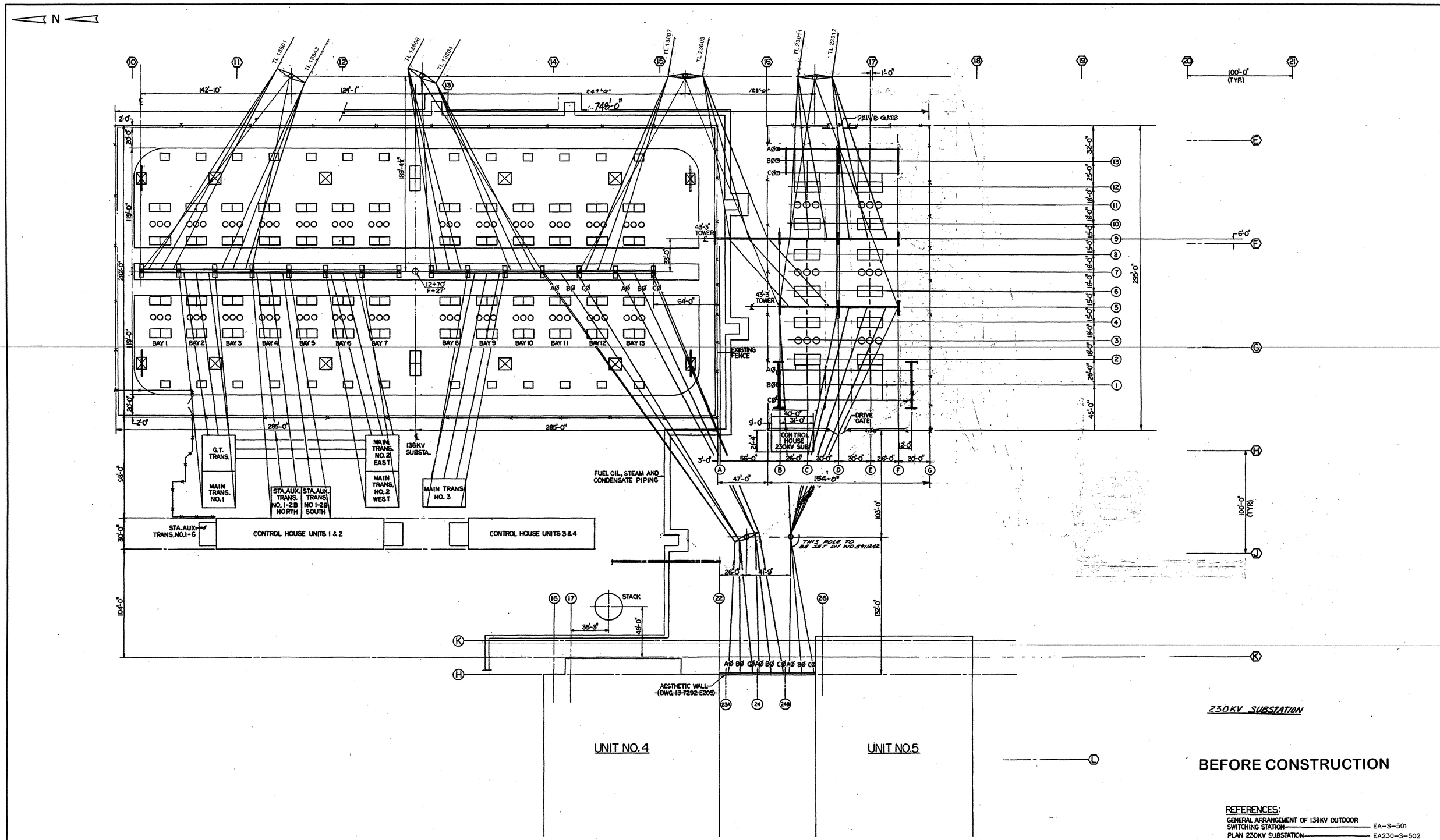

BEFORE CONSTRUCTION

REFERENCES:

GENERAL ARRANGEMENT OF 138KV OUTDOOR SWITCHING STATION — EA-S-501

PLAN 230KV SUBSTATION — EA230-S-502

DWG. WAS: 13-EA-E400

REVISIONS

NO.	WORK DONE	DATE	BY:	APP'D:
1	SCANNED DWG. INTO TITLEBLOCK WITH BARCODE AND CHANGE DWG. # W.O. 5980293	11/12/02	MN/CJS	
2	AS BUILT	10/26/06		DVM

SAN DIEGO GAS & ELECTRIC COMPANY
SAN DIEGO, CALIFORNIA

ENCINA SUBSTATION
230KV & 138KV ULTIMATE GENERAL ARRANGEMENT

DRAWN BY: TJ	DATE: 10/3/74	SCALE: NONE	W.O. 5980293 REV. 2
CHECKED BY:	DATE:		EA230-S-501
APPROVED BY:	DATE:		
CAD NO.: EA230S501	PLOT SCALE: 1 = 1		

Nov 12, 2002 - 12:48:08

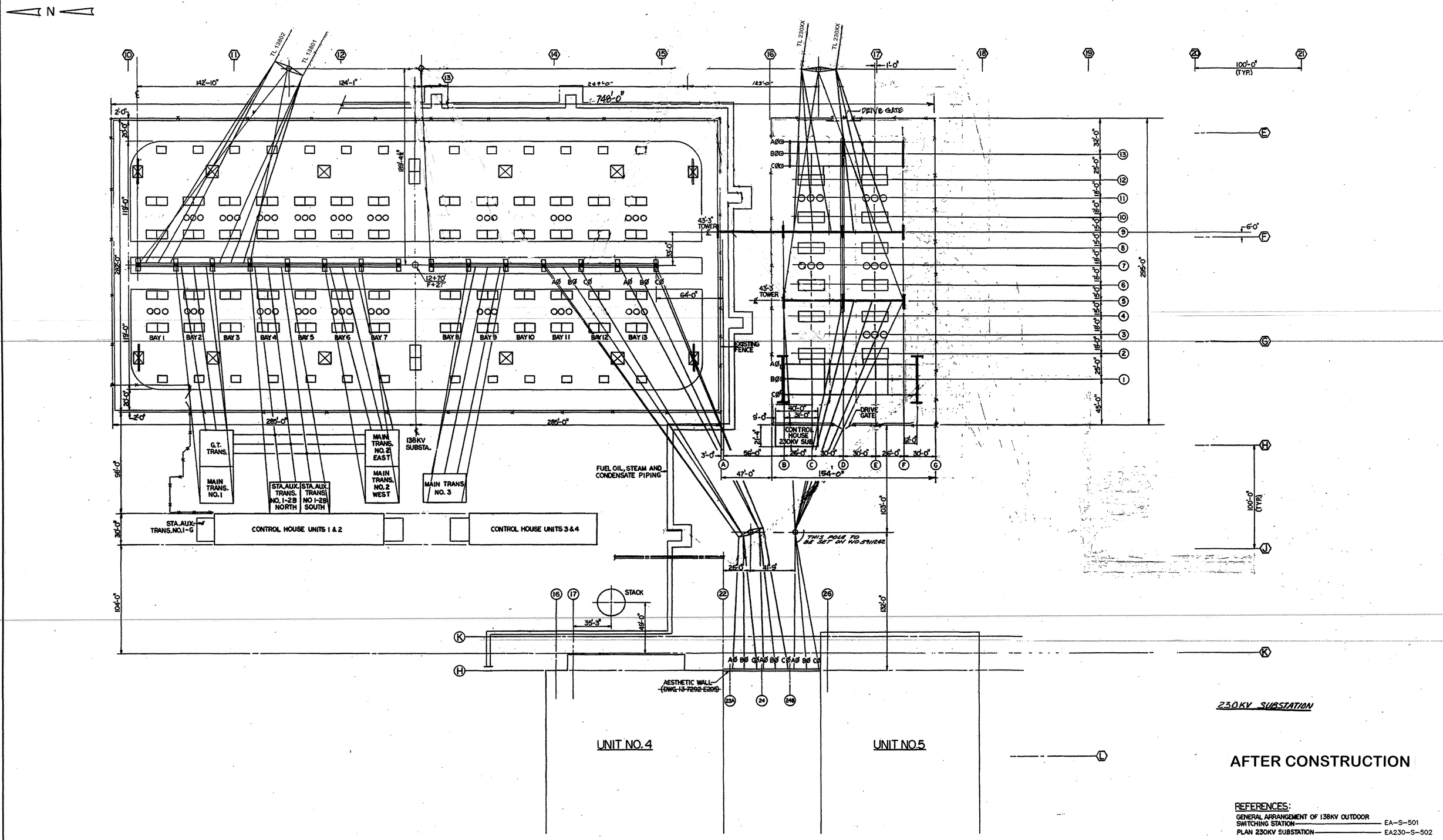

AFTER CONSTRUCTION

REFERENCES:

GENERAL ARRANGEMENT OF 138KV OUTDOOR SWITCHING STATION ——— EA-S-501

PLAN 230KV SUBSTATION ——— EA230-S-502

DWG. WAS: 13-EA-E400

REVISIONS

NO.	WORK DONE	DATE	BY:	APP'D:
1	SCANNED DWG. INTO TITLEBLOCK WITH BARCODE AND CHANGE DWG. # W.O. 5980293	11/12/02	MN/CJS	
2	AS BUILT	10/28/06		DVM

SAN DIEGO GAS & ELECTRIC COMPANY
SAN DIEGO, CALIFORNIA

ENCINA SUBSTATION
230KV & 138KV ULTIMATE GENERAL ARRANGEMENT

DRAWN BY: TJ	DATE: 10/3/74	SCALE: NONE	W.O. 5980293 REV. 2
CHECKED BY:	DATE:		
APPROVED BY:	DATE:		EA230-S-501
CAD NO.: EA230S501	PLOT SCALE: 1 = 1		

Nov 12, 2002 - 12:48:08

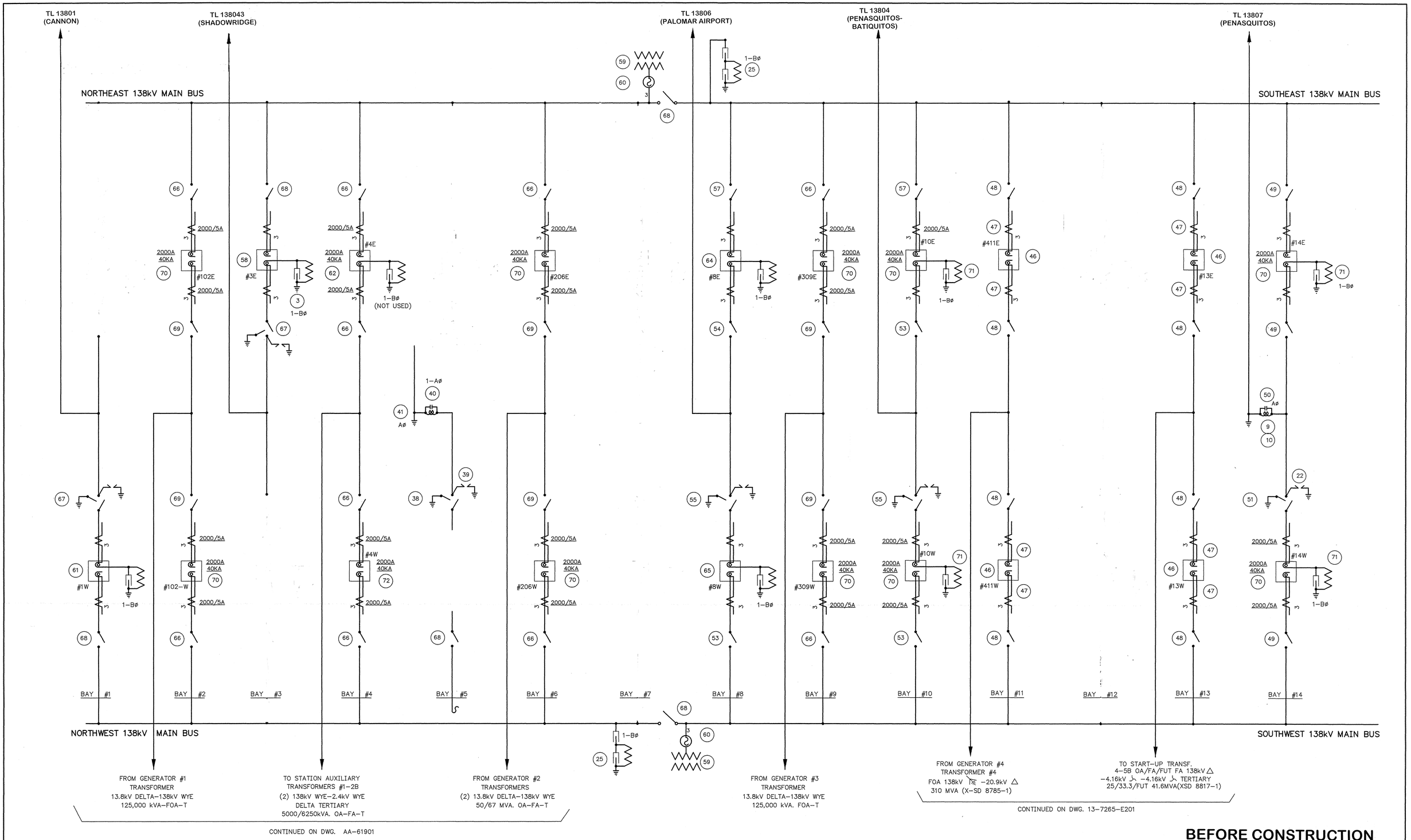

BEFORE CONSTRUCTION

REVISIONS

NO.	WORK DONE	DATE:	BY:	APP'D:
6	CONVERTED TO CADD; REDRAWN FROM DWG. E–30, REV.#5; REMOVED BILL OF MAT'L. & ADD/REVISE EXIST. BM: EA–E–2000 TO INCLUDE EXISTING ITEMS	W.O. 5933800	8/14/97	PC/RGG
7	REVISED PER FIELD MARKED PRINT	W.O. 5980028	11/29/98	TC/DMS MDK
8	REPLACED CB #4W	W.O.5980200	6/6/99	GM/DDW MDK
9	REM'D TL13802 & ADD C.B.#3E TO TL13801	W.O.5980293	5/9/01	GM/DDW
10	REVISED TIE LINE REMOTE END NOMENCLATURE PER	W.O.5984491	7/31/07	DAD RWN

SAN DIEGO GAS & ELECTRIC COMPANY
SAN DIEGO, CALIFORNIA

ENCINA SUBSTATION

138kV SWITCHYARD ONE LINE DIAGRAM

DRAWN BY: RGG	DATE: 8/14/97	SCALE: NONE	W.O.: 5980293	REV.: 10	
CHECKED BY:	DATE:		EA138–E–30		
APPROVED BY:	DATE:				
CAD NO.: EAE30	PLOT SCALE: 1 = 1				

Sept 13, 2007 – 08:59:13

TL 13802
(ENCINA EAST-
SAN LUIS REY)

TL 13801
(CANNON)

NORTHEAST 138kV MAIN BUS

SOUTHEAST 138kV MAIN BUS

59 60 3 68

1–Bø 25

66 2000/5A 3 2000A 40KA 70 #102E 2000/5A 3 69

58 #3E 3 1–Bø 67

66 2000/5A #4E 2000A 40KA 62 2000/5A 1–Bø (NOT USED) 66

66 2000/5A 2000A 40KA 70 #206E 2000/5A 69

66 2000/5A 2000A 40KA 70 #309E 2000/5A 69

48 47 #411E 46 47 48

48 47 46 #13E 47 48

1–Aø 40 41 Aø 39 38 68

67 61 #1W 1–Bø 68

69 2000/5A 2000A 40KA 70 #102–W 2000/5A 66

66 2000/5A #4W 2000A 40KA 72 2000/5A 66

69 2000/5A 2000A 40KA 70 #206W 2000/5A 66

69 2000/5A 2000A 40KA 70 #309W 2000/5A 66

48 47 46 #411W 47 48

48 47 46 #13W 47 48

BAY #1 BAY #2 BAY #3 BAY #4 BAY #5 BAY #6 BAY #7 BAY #8 BAY #9 BAY #10 BAY #11 BAY #12 BAY #13 BAY #14

NORTHWEST 138kV MAIN BUS

SOUTHWEST 138kV MAIN BUS

68 3 60 59 1–Bø 25

FROM GENERATOR #1
TRANSFORMER
13.8kV DELTA–138kV WYE
125,000 kVA–FOA–T

TO STATION AUXILIARY
TRANSFORMERS #1–2B
(2) 138kV WYE–2.4kV WYE
DELTA TERTIARY
5000/6250kVA. OA–FA–T

FROM GENERATOR #2
TRANSFORMERS
(2) 13.8kV DELTA–138kV WYE
50/67 MVA. OA–FA–T

FROM GENERATOR #3
TRANSFORMER
13.8kV DELTA–138kV WYE
125,000 kVA. FOA–T

FROM GENERATOR #4
TRANSFORMER #4
FOA 138kV Y –20.9kV Δ
310 MVA (X–SD 8785–1)

TO START–UP TRANSF.
4–5B OA/FA/FUT FA 138kV Δ
–4.16kV Y –4.16kV Y TERTIARY
25/33.3/FUT 41.6MVA(XSD 8817–1)

CONTINUED ON DWG. AA–61901

CONTINUED ON DWG. 13–7265–E201

AFTER CONSTRUCTION

REVISIONS

NO.	WORK DONE	DATE:	BY:	APP'D:
6	CONVERTED TO CADD; REDRAWN FROM DWG. E–30, REV.#5; REMOVED BILL OF MAT'L. & ADD/REVISE EXIST. BM: EA–E–2000 TO INCLUDE EXISTING ITEMS W.O. 5933800	8/14/97	PC/RGG	
7	REVISED PER FIELD MARKED PRINT W.O. 5980028	11/29/98	TC/DMS	MDK
8	REPLACED CB #4W W.O.5980200	6/6/99	GM/DDW	MDK
9	REM'D TL13802 & ADD C.B.#3E TO TL13801 W.O.5980293	5/9/01	GM/DDW	
10	REVISED TIE LINE REMOTE END NOMENCLATURE PER W.O.5984491	7/31/07	DAD	RWJ

SAN DIEGO GAS & ELECTRIC COMPANY
SAN DIEGO, CALIFORNIA

ENCINA SUBSTATION

138kV SWITCHYARD ONE LINE DIAGRAM

DRAWN BY:	RGG	DATE: 8/14/97	SCALE:	NONE	W.O.:	5980293	REV.: 10
CHECKED BY:		DATE:					
APPROVED BY:		DATE:					
CAD NO.:	EAE30	PLOT SCALE:	1 = 1				

EA138–E–30

Sept 13, 2007 – 08:59:13

TL 13802
(ENCINA EAST-
SAN LUIS REY)

TL 13801
(CANNON)

NORTHEAST 138kV MAIN BUS

SOUTHEAST 138kV MAIN BUS

59 60 3 68

1–Bø 25

66 2000/5A 3 2000A 40KA 70 #102E 2000/5A 3 69

58 #3E 3 1–Bø 67

66 2000/5A #4E 2000A 40KA 62 2000/5A 1–Bø (NOT USED) 66

66 2000/5A 2000A 40KA 70 #206E 2000/5A 69

66 2000/5A 2000A 40KA 70 #309E 2000/5A 69

48 47 #411E 46 47 48

48 47 46 #13E 47 48

1–Aø 40 41 Aø 39 38 68

67 61 #1W 1–Bø 68

69 2000/5A 2000A 40KA 70 #102–W 2000/5A 66

66 2000/5A #4W 2000A 40KA 72 2000/5A 66

69 2000/5A 2000A 40KA 70 #206W 2000/5A 66

69 2000/5A 2000A 40KA 70 #309W 2000/5A 66

48 47 46 #411W 47 48

48 47 46 #13W 47 48

BAY #1 BAY #2 BAY #3 BAY #4 BAY #5 BAY #6 BAY #7 BAY #8 BAY #9 BAY #10 BAY #11 BAY #12 BAY #13 BAY #14

NORTHWEST 138kV MAIN BUS

SOUTHWEST 138kV MAIN BUS

68 3 60 59 1–Bø 25

FROM GENERATOR #1
TRANSFORMER
13.8kV DELTA–138kV WYE
125,000 kVA–FOA–T

TO STATION AUXILIARY
TRANSFORMERS #1–2B
(2) 138kV WYE–2.4kV WYE
DELTA TERTIARY
5000/6250kVA. OA–FA–T

FROM GENERATOR #2
TRANSFORMERS
(2) 13.8kV DELTA–138kV WYE
50/67 MVA. OA–FA–T

FROM GENERATOR #3
TRANSFORMER
13.8kV DELTA–138kV WYE
125,000 kVA. FOA–T

FROM GENERATOR #4
TRANSFORMER #4
FOA 138kV Y –20.9kV Δ
310 MVA (X–SD 8785–1)

TO START–UP TRANSF.
4–5B OA/FA/FUT FA 138kV Δ
–4.16kV Y –4.16kV Y TERTIARY
25/33.3/FUT 41.6MVA(XSD 8817–1)

CONTINUED ON DWG. AA–61901

CONTINUED ON DWG. 13–7265–E201

AFTER CONSTRUCTION

REVISIONS

NO.	WORK DONE	DATE:	BY:	APP'D:
6	CONVERTED TO CADD; REDRAWN FROM DWG. E–30, REV.#5; REMOVED BILL OF MAT'L. & ADD/REVISE EXIST. BM: EA–E–2000 TO INCLUDE EXISTING ITEMS W.O. 5933800	8/14/97	PC/RGG	
7	REVISED PER FIELD MARKED PRINT W.O. 5980028	11/29/98	TC/DMS	MDK
8	REPLACED CB #4W W.O.5980200	6/6/99	GM/DDW	MDK
9	REM'D TL13802 & ADD C.B.#3E TO TL13801 W.O.5980293	5/9/01	GM/DDW	
10	REVISED TIE LINE REMOTE END NOMENCLATURE PER W.O.5984491	7/31/07	DAD	RWJ

SAN DIEGO GAS & ELECTRIC COMPANY
SAN DIEGO, CALIFORNIA

ENCINA SUBSTATION

138kV SWITCHYARD ONE LINE DIAGRAM

DRAWN BY:	RGG	DATE: 8/14/97	SCALE:	NONE	W.O.:	5980293	REV.: 10
CHECKED BY:		DATE:					
APPROVED BY:		DATE:					
CAD NO.:	EAE30	PLOT SCALE:	1 = 1				

EA138–E–30

Sept 13, 2007 – 08:59:13

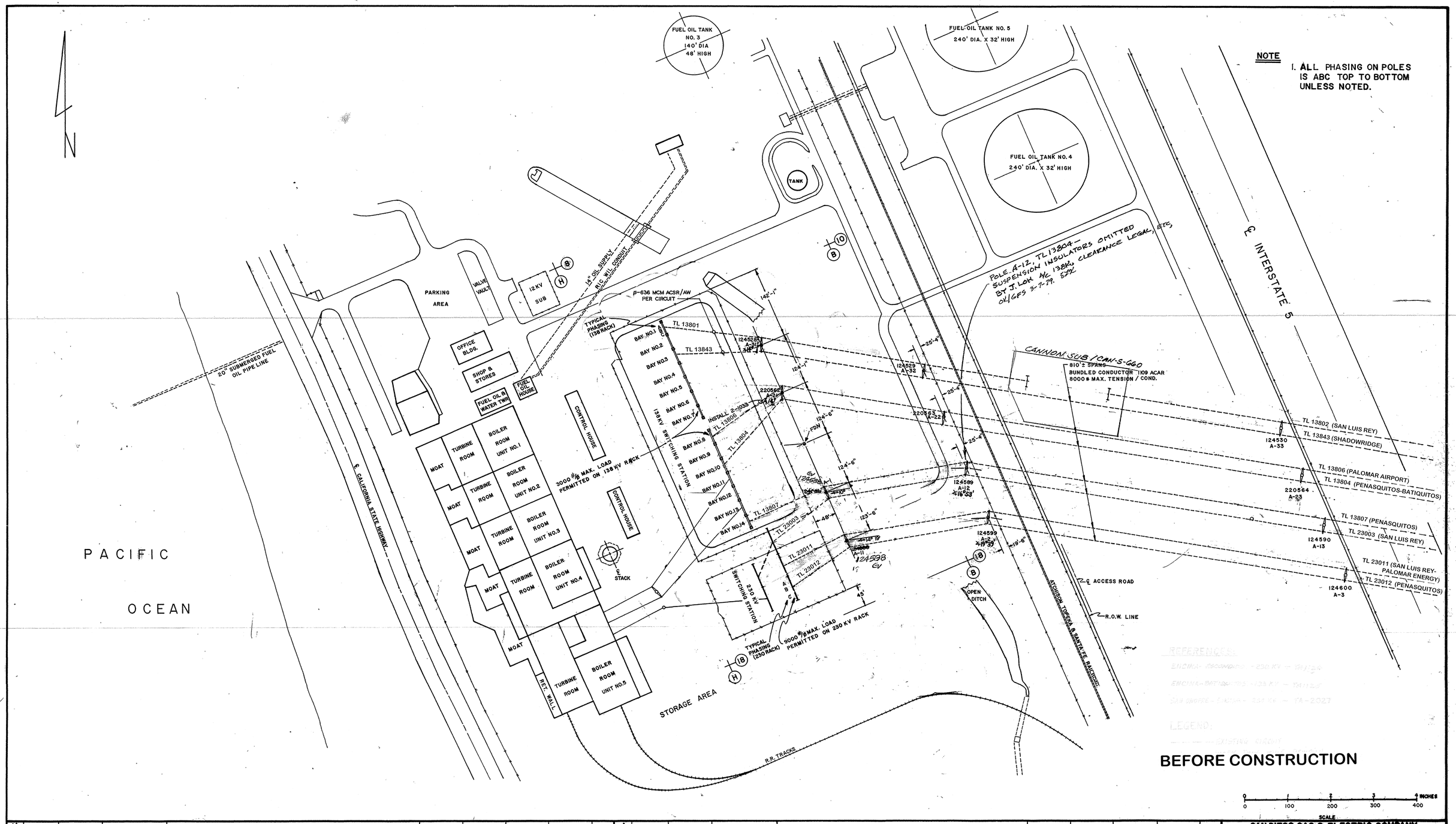

NOTE

1. ALL PHASING ON POLES IS ABC TOP TO BOTTOM UNLESS NOTED.

BEFORE CONSTRUCTION

0 1 2 3 4 INCHES
0 100 200 300 400
SCALE

REV	BUDGET	CONST ORDER	CHANGE	DRAWN	CHECKED	APPROVED	APPROVED	DATE
U								
T								
S								
R								
P								
N								
M								
L								
K								

REV	BUDGET	CONST ORDER	CHANGE	DRAWN	CHECKED	APPROVED	APPROVED	DATE
J								
H								
G								
F								
E								
D	95136	5932133	PHASING CHANGED T/L 23010 ST. POLE 124588 - AS-BUILD	G/OGT				
C	77164	5579720	ADDED SHIELD WIRES, A-1 POLE NO.	IGD	[signature]	[signature]	[signature]	9/19/80
B	77164	5579720	ADDED 23010; DELETE 13803; RELOCATED 13806, 13804, & 13807 RACK SPANS	IGD	[signature]	[signature]	[signature]	8/4/80
A	75138	5912681 REV #1	ORIGINAL	S.F.O. A.L.S.	[signature]	[signature]	[signature]	8/4/78

SAN DIEGO GAS & ELECTRIC COMPANY

ENCINA SUBSTATION

CONNECTING LINE MAP

REFERENCE SEE ABOVE

SHEET 1 OF 1

TD-1112

FORM 126-14284/2

A.A. 11-11-99