STATE OF CALIFORNIA

Energy Resources Conservation
and Development Commission

DOCKET
07-AFC-6
DATE NOV 18 2011
RECD. NOV 18 2011

In the Matter of:

The Application for Certification for the CARLSBAD ENERGY CENTER PROJECT

Docket No. 07-AFC-6

CARLSBAD ENERGY CENTER LLC'S SUPPLEMENTAL TESTIMONY, EXHIBITS, WITNESS LIST, AND TIME ESTIMATES FOR EXAMINATION OF WITNESSES

November 18, 2011

John A. McKinsey, Esq.
Melissa A. Foster, Esq.
Stoel Rives LLP
500 Capitol Mall, Suite 1600
Sacramento, CA 95814
Phone: (916) 447-0700
Facsimile: (916) 447-4781

Attorneys for CARLSBAD ENERGY CENTER LLC

STATE OF CALIFORNIA

Energy Resources Conservation and Development Commission

In the Matter of: **The Application for Certification for the CARLSBAD ENERGY CENTER PROJECT**	**Docket No. 07-AFC-6**

CARLSBAD ENERGY CENTER LLC'S SUPPLEMENTAL TESTIMONY, EXHIBITS, WITNESS LIST, AND TIME ESTIMATES EXAMINATION OF WITNESSES

I. INTRODUCTION

On November 9, 2011, the Committee assigned to the Carlsbad Energy Center Project's application for certification proceeding issued an order that directed the parties to this proceeding to, among other things, submit supplemental testimony, exhibits, a witness list and time estimates for examination of witnesses ("November 9th Order"). To that end, Applicant, Carlsbad Energy Center LLC, herein presents supplemental testimony and provides such additional information as required by the Committee's November 9th Order.

II. TESTIMONY

Among the topics the Committee indicated evidence and arguments will be accepted at the December 12, 2011 Evidentiary Hearing was:

- The impact of the three new [Power Purchase Agreement] projects on [the Committee's] cumulative impacts and alternatives analysis;
- Conditions LAND-2 and LAND-3, their environmental impacts and appropriate modifications to address the financial concerns raised by the Applicant;
- Grid reliability issues raised by the comments from [California Independent System Operator] during the June 30, 2011, Energy Commission Business Meeting;
- The federal [Prevention of Significant Deterioration] permit that the project will require in order to operate;

- Recent City [of Carlsbad] land use LORS amendments contained in Resolution 2011-230 and Ordinance CS-158; and,
- Additional evidence, not previously presented, regarding whether it is appropriate to override either unmitigated environmental impacts or noncompliance with state or local LORS.

Applicant presents testimony on these topics herein. However, in some instances, Applicant provides no new testimony; rather, Applicant relies on information and evidence already in the record. Therefore, Applicant would not present a witness for such topic and notes so within the applicable section below.

A. The Potential Impacts of the Three New Power Purchase Agreement Projects on the Committee's Cumulative Impacts and Alternatives Analysis

On May 9, 2011, the Committee published the Presiding Member's Proposed Decision ("PMPD") for CECP. Thereafter, the Committee published an errata to the PMPD, dated June 15, 2011 ("Errata"), wherein the Committee cited to San Diego Gas & Electric Company's announced intention to "enter into Power Purchase Agreements ("PPA") with three separate power plant projects (Escondido Energy Center, Pio Pico Energy Center and Quail Brush Power." (Errata at p. 30.) In its comments to the Errata, Center for Biological Diversity ("CBD") argued that the Committee "failed to comply with CEQA by not considering [these three projects] in the cumulative impacts analysis" and that the Errata is "legally deficient because it fails to consider the three power plants." (CBD's Comment on the Errata, pp. 2-6.)

On June 30, 2011, the Commission remanded the PMPD back to the Committee to take evidence on this issue. As such, Staff filed its supplemental testimony on August 11, 2011. (See Staff's Supplemental Testimony at pp. 5-6.) While Applicant believes Staff's testimony is comprehensive and provides the information needed for the Committee to opine on this issue, it must be noted that each of the three projects identified above are speculative; that is, neither the California Energy Commission nor the California Public Utilities Commission has given the appropriate approvals for any of these three projects. Applicant currently does not intend to present a witness or additional testimony as to this issue.

B. Appropriate Modifications to and Issues Associated with Conditions of Certification LAND-2 and LAND-3[1]

Applicant submitted written comments on the removal of conditions of certification LAND-2 and LAND-3 (herein after referred to as the "Land Use Enhancement Conditions") on September 23, 2011. Therein, Applicant presented its position as to why these Land Use Enhancement Conditions did not injure or weaken the Project's environmental analysis or LORS compliance. In fact, Applicant's position is that the Land Use Enhancement Conditions were presented solely as enhancements to the Project. Since introducing these Land Use Enhancement Conditions, however, Applicant has determined that the language of the conditions impose upon the Project an unbearable financial burden that could render CECP financially unviable. Further discussion regarding the adequacy of Staff's environmental analysis and proposed modifications to the Land Enhancement Conditions is set forth below.

1. Adequacy of Project Environmental Analysis with Conditions of Certification LAND-2 and LAND-3

As noted above, Staff submitted supplemental testimony for this topic on August 12, 2011. Applicant believes Staff's testimony on this issue is comprehensive and provides the information needed for the Committee to opine on this issue. While Applicant believes complete removal of the Land Use Enhancement Conditions is most appropriate, even if the Committee determines that some form of the Land Use Enhancement Conditions are necessary, no further environmental analysis is necessary as all the relevant analysis has been conducted and presented in the record.

///

[1] Testimony presented in Section B is sponsored by Scott Valentino. Mr. Valentino's professional qualifications and signed declaration as to this testimony is presented in Exhibit A.

2. Absent Complete Removal of LAND-2 or LAND-3, Modifications are Necessary to Remove Certain Financial Burdens from CECP

Land-2 and Land-3 would burden the new generation project with the cost of demolition and clean up of the existing Encina Power Station ("EPS") even though the new generation project is not in the footprint of the existing EPS and does not require it to be torn down, let alone developed for any particular new use. This burden could render CECP unable to obtain a Power Purchase Agreement ("PPA") in the competitive procurement process.

Applicant advocates for proposed modifications to the Land Use Enhancement Conditions as set forth below in Section B.5. These proposed modifications will ensure that CECP does not bear the substantial and unbearable financial burden of the demolition and remediation of the existing generator building at EPS.

The proposed modifications are appropriate because CECP does not make substantial use of the existing EPS, but instead CECP will be located in the fuel oil storage tank area situated between the railroad tracks and Interstate 5. Applicant understands that it jointly proposed these two conditions along with the City of Carlsbad. The conditions were predicated on a cooperative City that was truly interested in advancing the CECP replacement project and then redeveloping the old EPS. Instead, almost on the same day that Applicant submitted the jointly agreed to conditions, the City of Carlsbad recommenced its scorched-earth campaign to kill CECP and eliminate the ability of the Warren-Alquist Act to ever again influence power development in the area. In light of the renewed hostility of the City Council and City of Carlsbad staff, Applicant realized that CECP would end up bearing the costs of redevelopment of the location of the existing EPS. This is an unbearable financial burden, which is further explained below. The proposed modifications to the conditions largely correct this problem by tying demolition and remediation to cooperative and approved redevelopment of the same land. This solution is fair, just and workable.

3. The Costs of Demolition and Redevelopment of the Encina Power Station Should Not be Borne by the Applicant

The cost of the South Bay Power Plant Demolition Project is cited at approximately $63,000, 000 in a letter from Dynegy to the San Diego Unified Port District dated October 25, 2011.[2] While the obligations that Dynegy has assumed in the letter may not match exactly what will be required at the EPS site, this value does serve as a starting point. South Bay's steam units are of similar vintage as those of the EPS except that South Bay has four steam boiler units while EPS has five steam boiler Units and a Combustion Turbine. The South Bay Plant is not enclosed in a building as is EPS, which will result in additional cost to remove EPS. Without including the cost of the latter or the cost of removing the Combustion Turbine at EPS, Applicant adjusted the South Bay value to account for the removal of one additional unit and then escalate the value at three percent per annum to arrive at what a very rough cost estimate would be for EPS in 2017. The result of this exercise leads to a value of $94 Million. The South Bay demolition cost also does not include the full removal of the concrete intake structures, removal of the cooling water discharge pipes, or any soil remediation below a four foot depth.

While it is uncertain what the final plan might require at EPS, it is safe to say that the cost to demolish and remove EPS can be reasonably expected to exceed $100 Million when considering the differences between EPS and the South Bay Project referenced above.

4. Financing New Electrical Generation and the Function of a Power Purchase Agreement

New electrical generation projects in California are typically financed through non-recourse loans that are supported by long term purchase agreements for the output of the electric generating facility. The current market structure in California does not provide sufficient compensation to support the cost of construction of a new power plant, so financing and construction are directly dependent upon the ability to secure a long term Power Purchase

[2] The letter from Dynegy to the San Diego Unified Port District dated October 25, 2011 is presented in Applicant's Exhibit A1.

Agreement ("PPA") with a load serving entity on a bilateral basis. This most often occurs through a competitive solicitation in a formal Request for Offers ("RFO") process. New Generation RFOs are usually launched every two to five years and are dependent upon the local needs assessment and reliability determination. Through the competitive solicitation process and the needs assessment, the load serving entity is able to obtain approval from the California Public Utilities Commission to pass the cost it pays under the PPA onto its customers (beneficiaries of the PPA). The projects that are selected in the competitive solicitation process are those that deliver the greatest amount of benefits for the least cost to ratepayers and fill the procurement goal of the RFO as determined by the needs assessment.

Not unlike other new generation projects in the state, CECP will require a PPA with a load serving entity in order to secure project financing and commence construction. There are various forms of PPAs, but the important aspect is that it is a long term contract (typically in excess of ten years) under which the buyer is agreeing to purchase the output of the facility under agreed to, contractual terms and conditions. Financing for the project is delineated in the contract, which also specifies relevant dates of the project coming into effect, when the project will begin commercial operation, and a termination date for which the contract may be renewed or abandoned. All operational characteristics and parameters of the plant are monitored closely to provide the seller and the buyer with the most accurate information about the amount qualifying capacity available and the amount of electricity generated through the contract term. Rates for all products purchased under the agreement are stipulated in the contract and there are economic incentives and penalties specified for failure of either party to fulfill its contractual obligations.

A PPA is the central document in the development and construction of independent (non utility owned) power plants and is a critical component to obtaining project financing. Under this structure, the Project owner secures funding for the project and sells the products and services offered in the PPA (capacity, energy and ancillary services) to the buyer at a contractual

price for the duration of the contract. Most new generation PPAs in California are for a term of 10 to 25 years. One of the key benefits of the PPA is that by clearly defining the output of the generating asset and the credit of its associated revenue streams, a PPA can be used by the seller to raise non-recourse financing. Under a non recourse project financing, the only recourse available to the lenders is the collateral which is pledged (generally all project assets and property rights to continue to operate the facility). The lenders cannot hold the borrower personally liable for the loan in the event of a default. The lender(s) can seize (and sell) the collateral but cannot seize non pledged property. The most common financing vehicle available to projects of similar size and cost as CECP today are club deals that involve a large consortium of banks joining together to fund a project loan.

The underlying crux of the Applicants issue with proposed Land Use Enhancement Conditions as they are drafted is that the conditions attempt to place on the Project a significant financial burden that is in no way related to the construction of the new facility onto the project (estimated at $100 million). This cost burden inhibits the ability for CECP to be competitive in an RFO process as well as incorrectly attempts to burden ratepayers with an inappropriate cost. The facility that CECP would be required to pay to demolish is on a portion of the EPS property of which CECP has no contractual rights to utilize nor from which it derives any benefit. Therefore, there is no asset or contractual right to pledge to lenders in exchange for the demolition cost – hence it is not a valid project cost. To Applicant's knowledge, there have not been any projects that have been successfully financed and constructed when a cost of this magnitude unrelated to the project has been imposed. The most likely result of issuing a permit with these conditions unmodified would be that CECP never gets constructed and thus the Conditions have no merit. The end result here would be threefold. First, the CEC would issue a permit to a project that will most likely never get built due to its inability to secure a PPA. Second, EPS would remain in service longer than it would otherwise if CECP is built. And, finally, the City of Carlsbad and Cabrillo (owner of EPS) would have to mutually agree upon a

development plan that takes into consideration demolition and remediation costs to accommodate the eventual conversion of the property. Therefore, the only outcome that would be different from not removing the financial burden of these conditions from CECP is that all five units of EPS would remain in service longer. This is not the desired outcome for either the Applicant or the City of Carlsbad.

NRG and the City of Carlsbad do share a common vision for the western portion of the property to be redeveloped to something other than electrical generation. After all, that is the premise behind constructing CECP on the eastern portion of the property between the railroad tracks and the interstate which as contemplated, facilitating the shutdown of a portion of the EPS. The remainder of EPS will shut down once there is no longer a need for the plant, but at that point, the costs of converting the property into another use needs to be considered and borne by the development project that directly benefits from the use of the property. CECP has no rights to that property nor benefits in any way from a future alternate use and this is not a cost that should be borne by ratepayers for the new facility (in the event that CECP was ever able to secure a PPA).

5. Applicant's Proposed Modifications to LAND-2 and LAND-3.

Applicant's proposed modified Land Use Enhancement Conditions are as follows:

> **LAND-2** On or before January 1, 2016, the project owner shall prepare and submit a Demolition, Removal, and Remediation Plan (DRRP) to the CPM, the City of Carlsbad, and the Carlsbad Redevelopment Agency. The DRRP shall propose the process, schedule, and legal requirements for the demolition, removal, and remediation of the Encina Power Station (Units 1 through 5), associated structures, the black start unit and the exhaust stack. As part of completion of the DRRP, project owner shall consult with the California Energy Commission, the California Coastal Commission, the City of Carlsbad, the Carlsbad Redevelopment Agency, the San Diego Regional Water Quality Control Board, the San Diego Air Pollution Control Board, and the California Independent System Operator to ensure the DRRP best reflects the procedural and substantive requirements that will apply to the site.
>
> On or before January 1, 2017, project owner shall prepare and submit to the CPM, the City of Carlsbad, and the Carlsbad Redevelopment Agency, a study of the estimated costs associated with implementing the DRRP.

Verification: On or before January 1, 2016, project owner shall provide the DRRP to the CPM for review and approval and to the City of Carlsbad, the Carlsbad Redevelopment Agency, and the California Coastal Commission for review and comment. The City of Carlsbad and the Carlsbad Redevelopment Agency shall provide comments on the DRRP to the CPM and project owner within 60 days or a date mutually agreeable to project owner and the City of Carlsbad and the Carlsbad Redevelopment Agency.

On or before January 1, 2017, project owner shall submit the results of the study on estimated costs of implementing the DRRP to CPM for review and approval and to the City of Carlsbad and the Carlsbad Redevelopment Agency for review and comment.

The City of Carlsbad and the Carlsbad Redevelopment Agency shall provide comments on cost estimate to the CPM and project owner within 60 days or a date mutually agreeable to the project owner and the City of Carlsbad and the Carlsbad Redevelopment Agency.

LAND-3 Project owner shall seek partners to complete redevelopment of the Encina Power Station according to the Demolition, Removal, and Remediation Plan (DRRP) approved by the CPM pursuant to LAND-2.

Upon the permanent retirement of Units 1 through 5 and the black start unit at Encina Power Station, Project Owner shall actively pursue fiscally viable redevelopment of the Encina Power Station. Such pursuit could include selling or transferring the land and facilities to a developing entity or entering into a joint venture with one or more developers. By the requirements of this condition of certification, the project owner is not expected to pursue demolition and remediation of the Encina Power Station absent a viable and funded redevelopment plan that includes future uses of the site that provide the revenue or funds necessary to pay the costs of demolition and remediation.

Upon the commencement of commissioning activities of the project, project owner shall request permission from the California Public Utilities Commission (CPUC) to permanently shutdown Units 1 through 5 at the Encina Power Station and the black start unit.

Verification: Project Owner shall report to CPM on annual basis the status of the redevelopment efforts at the Encina Power Station.

///

C. Grid Reliability Issues Raised by the California Independent System Operator at the June 30, 2011 Business Meeting

At the June 30, 2011 Commission Business Meeting, CAISO representative Dennis Peters raised grid reliability issues as such relate to CECP. Specifically, Mr. Peters stated on the record that CECP will add to grid reliability and will enable the San Diego Region and the

Project subarea to maintain power when demand fluctuates. (Dennis Peters, California ISO, June 30, 2011, CEC Business Meeting Transcript at p. 68, lines 13-24.) Further, Mr. Peters stated:

> [T]he proposed Carlsbad Energy Center would help insure a more reliable electric system in the San Diego area. And based on current supply and load forecasts, ISO believes that the PMPD correctly concludes that without construction of the Carlsbad Energy Center Project retirement of Encina Power Station Units 1 to 3 may be difficult to accomplish.

(Dennis Peters, California ISO, June 30, 2011, CEC Business Meeting Transcript at pp. 59:21-60:2.)

To highlight this issue, on September 8, 2011 much of San Diego County lost power in a blackout within San Diego Gas & Electric's coverage area on September 8, 2011. The blackout started shortly before 4 p.m. PDT and stemmed from an incident in Yuma, Arizona on a key transmission line between Arizona and California. All 1.4 million SDG&E customers were without power. While investigations continue to determine all the causes for the widespread power outage, the blackout served as a reminder that the San Diego area is in critical need of new generation. (See Exhibit B, Prepared Testimony of Brian Theaker.)[3]

D. Project Impacts Related to the Federal Prevention of Significant Deterioration Permit

In the November 9th Order, the Committee indicated it will accept evidence and argument relating to the Federal Prevention of Signification Deterioration Permit. To that end, Applicant presents its testimony below and provides the declaration of its witness, Gary Rubenstein, at Exhibit C. As this Committee is aware, Mr. Rubenstein has appeared as a witness in this proceeding and, thus, his professional qualifications have been previously provided and are part of the record. In addition, Exhibits D and E are provided in support of the testimony set forth below.

---

[3] Mr. Theaker's signed declaration and professional qualifications are also provided in Exhibit B and Exhibit B1.

1. PSD Program - Requirements

EPA promulgated Prevention of Significant Deterioration ("PSD") regulations for areas that are in compliance with national ambient air quality standards (40 C.F.R. 52.21). The San Diego County is classified as an attainment area with regards to the national ambient air quality standards for NO_2, SO_2, CO, PM_{10}, and $PM_{2.5}$. Therefore, these criteria pollutants, along with Greenhouse Gas ("GHG") emissions, are regulated by the PSD regulations in the San Diego Air Pollution Control District ("SDAPCD"). The PSD program allows new sources of air pollution to be constructed, or existing sources to be modified, while preserving the existing ambient air quality levels, protecting public health and welfare, and protecting Class I areas (e.g., specific national parks and wilderness areas). There are five principal areas of the PSD program: (1) Applicability; (2) Best Available Control Technology; (3) Pre-Construction Monitoring; (4) Increments Analysis; and (5) Air Quality Impact Analysis. The federal PSD requirements apply on a pollutant-specific basis to any project that is a new major stationary source or a major modification to an existing stationary source. (These terms are defined in federal regulations.) (40 C.F.R. 52.21.b) Issuance of PSD permits for projects located in the SDAPCD is currently the responsibility of EPA Region 9.[4]

a. PSD Program - Applicability

Since the Encina Power Station is an existing major source, PSD applicability is based on evaluating the emissions changes associated with the Proposed Project and determining if the project is a major modification to an existing major source. To determine whether the Proposed Project will trigger PSD review as a major modification to an existing major facility, EPA policy and regulations require a two-step test. First it is necessary to determine whether emission increases associated with the proposed modification (in this case, the proposed new equipment) is significant under the PSD regulations. If the emission increase for the new equipment is

[4] Although it is possible that the SDAPCD will receive delegation from EPA Region 9 to issue PSD permits for CECP and other projects, this testimony is based on the assumption that EPA remains the permitting authority. The substantive PSD requirements are the same whether the permit is issued by EPA, or by the SDAPCD under a delegation of authority.

significant for one or more attainment pollutants, the next step is to compare the facility wide net emission change for each of these pollutants, along with all contemporaneous increases and decreases at the project site, with the PSD significance levels. A project is a major modification subject to PSD review if there is a net emission increase above a PSD significance level.

The emission increases for the new equipment associated with the Proposed Project, based on the proposed potential to emit, are summarized below in Table 1 (below). As shown in Table 1, the emission increase for the proposed new equipment is above the PSD significance levels for the attainment pollutants NOx, CO, PM_{10}, $PM_{2.5}$, and GHG. Therefore, for these pollutants it will be necessary to determine whether there is a facility-wide net emission increase above PSD significance levels. Because the San Diego County is classified as a federal nonattainment area for ozone, the PSD regulations do not apply to VOC emissions. Consequently, VOC emissions are not included for purposes of PSD applicability for the Proposed Project.

///

Table 1 CECP Project – Emission Increases		
Pollutant	Emission Increase for New Equipment* (tons/year)	PSD Significance Level** (tons/year)
NOx	75.6	40
CO	217.3	100
VOC	20.1	N/A
SOx	5.6	40
PM_{10}	39.0	15
$PM_{2.5}$	39.0	10
GHG	932,630	75,000

Note (Table 1):
* See PMPD for Carlsbad Energy Center Project, May 2011, Air Quality Table 8 and Greenhouse Gas Table 1. GHG emissions converted from MTCO2e to CO2e in short tons using a factor of 1.1023 short ton/MT.
** 40 CFR 52.21.b.23.

To determine the facility-wide net emission increases for NOx, CO, and PM_{10}, $PM_{2.5}$, and GHG associated with the proposed installation of the new equipment, it is necessary to sum the new equipment emission increases with other emission increases and decreases at the power plant during the contemporaneous period. Under the PSD regulation, the contemporaneous period begins five years before the anticipated start of construction of the proposed new equipment, and ends with the date of the emission increase associated with the new equipment. (40 C.F.R. 52.21.b.3.ii.) The final SDAPCD permit along with the CEC approval for the proposed CECP project is expected to occur in the next few months. Consequently, construction could begin as early as 2012. Therefore, for the Proposed Project the contemporaneous period under the PSD regulations could begin as early as January 1, 2007 (5-year look back from start of construction) and would end when the proposed new equipment begins normal operation. Because this period, however, defined, will include the shutdown of Encina Power Station Units 1, 2, and 3, it is necessary to calculate the emission decrease associated with the shutdown of these units to determine the facility-wide net emission changes for the proposed project.

Previous submittals to the EPA included the facility-wide net emission change for the Proposed Project including the shutdown of Encina Power Station Units 1, 2, and 3.[5] While these calculations concluded that the Proposed Project would not trigger PSD review, with the new GHG PSD pollutant and a possible change to the 5-year baseline period due to the delay in the issuance of the Final SDAPCD permit/CEC approval, the Proposed Project may trigger PSD review for GHG emissions and could possibly trigger PSD review for additional criteria pollutants. It is important to keep in mind that the time periods for the contemporaneous window and for the baseline for emissions from existing units are not the same under the federal PSD regulations; these periods are determined separately, and will likely be different time periods, under federal PSD regulations. The Applicant has not made final assessments of either time period, or of the net emissions increase for purposes of PSD applicability, at this time.

b. PSD Program – Compliance

If the Proposed Project triggers PSD review, the next step is to determine whether the Proposed Project will be able to comply with the following principal applicable requirements of the PSD regulations on a pollutant-specific basis:

- Best Available Control Technology;
- Pre-Construction Monitoring;
- Increments Analysis; and
- Air Quality Impact Analysis.

2. CECP's Compliance with BACT

The Proposed Project's compliance with BACT for criteria pollutants is discussed in the PMPD.[6] Consequently, the Applicant believes that the Proposed Project currently complies with BACT for all criteria pollutants, and that this determination will not change in the course of a

[5] See June 24, 2009 letter from NRG to the EPA (Applicant's Exhibit 91) and August 24, 2009 letter from Sierra Research to the EPA (Applicant's Exhibit 103).

[6] PMPD for Carlsbad Energy Center Project, May 2011, Air Quality pages 5 and 6.

PSD review. With regards to BACT for GHG emissions, in a recent determination by EPA Region 9 for a natural gas fired combined-cycle gas turbine project similar to the Proposed Project (see for example, Exhibit D, Palmdale Hybrid Power Project's BACT Analysis), EPA concluded that BACT for GHG is the use of new thermally efficient combustion turbines and a GHG emission limits of 774 lbs CO_2/MWh for source-wide net output, and 117 lbs CO_2/MMBtu heat input for each gas turbine.[7] Because the Proposed Project includes the installation of high efficiency combined-cycle gas turbines with GHG emissions similar to those of the Palmdale Hybrid Power Project (approximately 890 lb CO_2/MWh[8] and 117 lbs CO_2/MMBtu[9]), the Proposed Project is expected to comply with BACT requirements for GHG emissions. Therefore, the Applicant does not foresee any problems with the Proposed Project complying with PSD BACT requirements.

a. Pre-Construction Monitoring

The pre-construction meteorological and ambient air quality monitoring data used for the analysis of the Proposed Project is discussed in the CEC final staff assessment.[10] Data collected at these monitoring stations would also be used to prepare the analyses needed for a PSD permit application. Therefore, the Applicant believes that this data is readily available and will comply with PSD regulatory requirements.

///

---

[7] Fact Sheet and Ambient Air Quality Impact Report, Palmdale Hybrid Power Project, PSD Permit Number SE 09-01, August 2011, page 30 (see Exhibit E attached hereto).

[8] PMPD for Carlsbad Energy Center Project, May 2011, Greenhouse Gas Table 1. GHG emissions converted from $MTCO_2e$ to CO_2e in short tons using a factor of 1.1023 short ton/MT.

[9] AFC for Carlsbad Energy Center Project, September 2007, Appendix 5.1B, Table 5.1B-16, gas turbine CO2 emission factor of 53.05 kg/MMBtu converted to lbs/MMBtu.

[10] CEC Final Staff Assessment of the Carlsbad Energy Center Project, Revised December 2009, (Staff's Exhibit 200), Air Quality Table 10 regarding background ambient concentrations for project area and pages 4.1-4 to 4.1-5 regarding meteorological data collected for project area.

b. Increments Analysis

For the criteria pollutants that trigger PSD review, as part of a PSD permit application it will be necessary to address project compliance with applicable increment thresholds. An increments analysis is not required for project impacts below EPA significant levels. As shown in the AFC,[11] the Proposed Project's ambient impacts are below many of the EPA significant levels. Therefore, while a more detailed increments modeling analysis may be necessary as part of a PSD permit application for the Proposed Project, the Applicant does not foresee any problems with complying with the requirement to perform such an analysis, if required.

c. Air Quality Impact Analysis

For the criteria pollutants that trigger PSD review, as part of a PSD permit application it will be necessary to perform a modeling analysis to show that the Proposed Project will not result in significant deterioration of ambient air quality in the project area. As discussed in the PMPD,[12] air quality modeling results show that the Proposed Project will not cause or contribute significantly to violations of any federal air quality standards. In addition, as discussed in the Errata to the PMPD,[13] modeling results show that the Proposed Project will not cause or contribute to a violation of the new 1-hr NO_2 federal air quality standard. Therefore, the Applicant does not foresee any problems complying with the PSD air quality impact analysis requirements if such an analysis were necessary as part of PSD permit application.

3. PSD Program – Permit Issuance

As discussed above, due to the new GHG PSD applicability threshold, it may be necessary for the Applicant to submit a PSD Permit Application to EPA Region 9 for the

---

[11] Project Enhancement and Refinement Document for the Carlsbad Energy Center Project, July 2008, (Applicant's Exhibit 35), Table 5.1-31 (Revised 5/11/08).

[12] PMPD for Carlsbad Energy Center Project, May 2011, Air Quality pages 4 and 5.

[13] Errata to PMPD for the Carlsbad Energy Center Project, June 2011, Air Quality Table 10.

Proposed Project. The Applicant expects that the preparation of a PSD Permit Application would take approximately 3 to 4 months to complete. Once the PSD permit application is submitted to EPA Region 9, the Applicant expects EPA to take at least 12 months to issue the draft PSD permit for the Proposed Project. Depending on the comments received by EPA on the draft PSD permit, it could take the EPA an additional 6 months to respond to comments and issue the final PSD permit. Following the issuance of the final PSD permit by EPA, there is a 30-day appeals period. If an appeal is filed on the final PSD permit for the Project, it could take the EPA Environmental Appeals Board from 6 to 12 months to rule on the appeal.

The final PSD permit for the Proposed Project will include a number of operating and emission limits and testing/monitoring requirements for the criteria pollutants that trigger PSD review. The Applicant expects these operating/emission limits and testing/monitoring requirements to be similar to those developed by the EPA recently for the Palmdale Hybrid Power Project. (See Exhibit E Palmdale Hybrid Power Project's PSD permit.)

While there remains some question as to which pollutants will trigger PSD review for the Proposed Project, as discussed above the Applicant does not foresee any significant problems with complying with the applicable PSD requirements.

E. Applicability of City of Carlsbad's Recent Land Use Amendments

Below is the testimony of Applicant's witness for this topic, Ronald Rouse. Mr. Rouse's declaration is provided at Exhibit F. Mr. Rouse has testified previously in the proceeding and thus, his professional qualifications are a part of the record.

The Warren-Alquist Act provides the Commission with exclusive jurisdiction regarding the siting, design and permitting of electric generating facilities. (Pub. Resources Code §§ 25000 *et seq.*) The Carlsbad City Council and Carlsbad Redevelopment Agency (collectively, the "City") belatedly adopted various resolutions and ordinances on September 27 and October 11, 2011 in yet another of its multiple attempts to defeat CECP and circumvent the Commission's

authority to certify the Project. The City's recent actions are simply another attempt by the City to prevent CECP from being built within the City's Coastal Zone or the City, period. In fact the City Staff Report acknowledges that the purpose of the recent amendments is to "reinforce the city's opposition to the proposed CECP" and frustrate the CEC proceedings. (See City Planning Commission Staff Report, dated September 7, 2011, at p. 4.) The recent land use amendments do not meet the requirements of California's zoning laws, nor were they adopted in accordance with the provisions of the California Environmental Quality Act.

Resolution 2011-230 approves and adopts various recommendations of the City of Carlsbad Planning Commission. (See City's Resolution 2011-230 at pp. 1-2.) Resolution 2011-230 adopts and approves Local Coastal Program Amendment ("LCPA") 11-06 and incorporates by reference the findings in Planning Commission Resolution No. 6805 regarding the same, but expressly notes that "approval of LCPA 11-06 shall not become effective until it is approved by the California Coastal Commission and the California Coastal Commission's approval becomes effective." (See City's Resolution 2011-230 at p. 2.) The LCPA will not go into effect unless and until the Coastal Commission approves it; thus, it is not an effective LORS.

In the same vein, by the express language of Zoning Ordinance CS-158, it does not go into effect until thirty (30) days from the date of its adoption. (Ordinance CS-158.) Further, the Ordinance expressly states that it "shall not be effective until approved by the California Coastal Commission." (*Id.*) Thus, the Ordinance is not an effective LORS and has no affect on the CECP AFC Proceeding.

The only other recent land use amendment that the City requested be officially noticed by the Committee (See City's October 17, 2011 Request to Take Official Notice) is General Plan Amendment ("GPA") 11-06, which was adopted by the City in its approval of Resolution 2011-230 on September 27, 2011. GPA 11-06 removes the use of "generation of electrical energy" from the definition of the Public Utilities (U) land use designation and carves out an exception to the generation of electrical energy <u>if</u> it is located outside of the Coastal Zone <u>and only if</u> it is

conducted by a governmental entity or a company and such use is authorized or approved by the California Public Utilities Commission. Throughout the entire four-plus year AFC proceeding, and until just six weeks ago, the CECP fell squarely within the City's "U" land use designation.

The City acknowledged that the sole purpose of the recent amendments to the land use designation at this extremely late stage in the CEC AFC proceeding is to "reinforce the city's opposition to the proposed CECP" (See City Planning Commission Staff Report, dated September 7, 2011, at p. 4), and is yet another attempt to thwart the CEC's sole jurisdiction over power plant licensing pursuant to the Warren-Alquist Act.

In addition, on October 11, 2011, the City also adopted Ordinance CS-159 (PDP 00-02(E)) and Ordinance CS-160 (SP-144(N)). As part of its obstructionist strategy, these ordinances purport to amend Specific Plan 144 ("SP-144") and the Encina Power Station Precise Development Plan ("PDP 00-02") to incorporate the City's changes to its Zoning Ordinance and General Plan in a further belated attempt to render the CECP inconsistent with local LORS.

PDP 00-02 "serve[s] as an information and regulatory document to meet the City's zoning requirements for the Public Utility Zone as the zone applies to the Encina Power Station (EPS)." (PDP 00-02 at p. 7.) Under the City's land use regulatory program, PDP 00-02 in fact functions as an implementing permit for development on the EPS property, rather than an applicable LORS regulating allowable land uses. Its function is simply to document and identify the actual development of the EPS property and compliance with applicable use and other standards; it does not impose standards per se, nor is it the vehicle for establishing allowable land uses. A precise development plan generally, and in particular, PDP 00-02, does not itself establish permitted uses or regulations and must be consistent with applicable LORS. Accordingly, PDP 00-02 was amended to conform with the City's amendments to its Zoning Ordinance and General Plan. New "conforming" language in PDP 00-02 summarizes the amended "U" General Plan land use designation and P-U zone.

> The EPS is located inside the Coastal Zone. Because of its location, primary function and generating capacity, the EPS is inconsistent with the General Plan and not a permitted use in the P-U Zone or this PDP.
> …
> It should be noted that the EPS is not considered a permitted use within the PDP. It is not consistent with the General Plan or the Zoning Ordinance.

(PDP 00-02 at pp. 7, 27.) The City also blatantly deleted language related to the compatibility of the EPS and neighboring land uses. With its latest amendment to PDP 00-02, the City removed the following passage:

> The Encina Power Station and surrounding neighborhoods have co-existed for approximately 50 years with minimal day to day interaction or disturbance. The EPS operations are self-contained and do not generally extend beyond the limits of the PDP. The EPS and implementation of the Precise Development Plan will facilitate continued compatibility with the EPS and surrounding developments in the area.

(PDP 00-02 at p. 16.) How this language could, overnight, no longer be true or relevant, when there has been no change in use or operation on the EPS property, is baffling. Even with the City's recent actions, however, PDP 00-02 cannot restrict the design or operation of the CECP, as the PDP acts as a catalogue of authorized uses, not a separate authorization of use.

SP-144 provides standards and requirements for development within the Specific Plan area, including the proposed CECP site and the remainder of the EPS property. SP-144 was amended on October 11, 2011 solely to delineate that EPS is no longer a permitted use in the P-U zoning district and under the U designation of the General Plan Land Use element.

> The EPS is not a permitted use in the P-U zoning district or within the boundaries of PDP 00-02(E). Further, both the P-U Zone and PDP 00-02(E) clarify generation of electrical energy is permitted in the Coastal Zone only if (1) by a government entity or by a utility company authorized or approved for such use by the California Public Utilities Commission and (2) it is an accessory use that generates fewer than 50 megawatts. Both the P-U Zone and PDP 00-02(E) also clarify that a generating capacity of 50 megawatts or more is prohibited in the Coastal Zone.
>
> …

> The Encina Power Station is not consistent with the General Plan Public Utilities designation since its primary function is generation of electrical energy and it is located within the Coastal Zone.

(SP-144 at pp. 14, 16.) Just as the City's ploy to have new zoning and General Plan restrictions render the CECP inconsistent with local LORS, the amendments of SP-144 and PDP 00-02 to reflect these restrictions should have no bearing on the Commission's consideration of the benefits of the CECP and its overarching consistency with LORS.

As noted above, the Commission has exclusive jurisdiction regarding the siting, design and permitting of electric generating facilities. The City's recent land use amendments are an attempted retroactive prohibition of the CECP at its proposed site. The biased amendments lend nothing to the Committee's analysis of the CECP AFC and the CECP's compliance with applicable LORS. However, in the event that the Committee determines that CECP does not conform to any of the City's recent land use amendments, then an override is justified as set forth in Section F, *supra*.

F. An Override is Appropriate

There are two types of overrides in power plant siting cases: environmental overrides and nonconformance overrides. Where a project will result in significant environmental impacts that cannot be mitigated, an agency cannot approve that project unless it finds that "the benefits of the project outweigh the unavoidable significant adverse environmental effects." (20 Cal. Code Regs. § 1755 (d)(2).) Further, the Commission cannot license a project that conflicts with one or more LORS unless it finds "that such facility is required for public convenience and necessity and that there are not more prudent and feasible means of achieving such public convenience and necessity." (Pub. Resources Code § 25525.)

Here, since all potentially significant environmental impacts are mitigated, an environmental override pursuant to CEQA is not necessary. Regarding a nonconformance override, Public Resources Code section 25525 expressly provides as follows:

> The commission may not certify a facility contained in the application when it finds, pursuant to subdivision (d) of Section 25523, that the facility does not conform with any applicable state, local, or regional standards, ordinances, or laws, unless the commission determines that the facility is required for public convenience and necessity and that there are not more prudent and feasible means of achieving public convenience and necessity. In making the determination, the commission shall consider the entire record of the proceeding, including, but not limited to, the impacts of the facility on the environment, consumer benefits, and electric system reliability.

(Pub. Resources Code § 25525.) Thus, the findings in support of a nonconformance override must demonstrate (a) that CECP is required for public convenience and necessity, and (b) there are not more prudent and feasible means of achieving public convenience and necessity.

Although no legal decisions interpret the phrase "public convenience and necessity" as it is used in Public Resources Code section 25525, numerous decisions address the phrase "public convenience and necessity" as it appears in Public Utilities Code section 1001. In those cases, the phrase is construed broadly and "any improvement which is highly important to the public convenience and desirable for the public welfare may be regarded as necessary." (CEC Metcalf Energy Center (99-AFC-3) Final Decision, at p. 464 (Sept. 24, 2001); *see also* El Segundo Power Redevelopment Project (00-AFC-14) Final Decision, at p. 296 (Feb. 2, 2005).) In previous Energy Commission decisions where an override was adopted, the CEC has stated that it "must logically first ascertain whether [the] project is reasonably related to the goals and policies of . . . the Warren-Alquist Act [which] expressly recognizes that electric energy is essential to the health, safety, and welfare of the people of California, and to the state's economy." (*Id.*) In previous licensing proceedings, the CEC has determined that it "is inescapable that electrical energy is essential to the functioning of contemporary society" and since the project "will provide a portion of the electrical energy supply essential to the well-

being of the state's citizens and its economy," the CEC has concluded that the project is required for public convenience and necessity. (CEC Metcalf Energy Center (99-AFC-3) Final Decision, at p. 464 (Sept. 24, 2001); *see also* El Segundo Power Redevelopment Project (00-AFC-14) Final Decision, at p. 297 (Feb. 2, 2005).)

The second requirement for the Commission to issue an override is that there are not more prudent and feasible means of achieving public convenience and necessity. (Pub. Res. Code § 25525.) This determination must be made based on the totality of the evidence of record and consider environmental impacts, consumer benefits, and electric system reliability. (*Id.*) In balancing these factors, the Commission gives "substantial but not overwhelming weight to avoiding LORS noncompliance." (CEC Metcalf Energy Center (99-AFC-3) Final Decision, at p. 466 (Sept. 24, 2001).)

To that end, CECP has no significant, unmitigatable environmental impacts. CECP's numerous benefits that would justify an override include:

- Retirement & decommissioning of existing units 1-3, 320 MW of older, less efficient generation;
- Installation of two low profile, high-efficient, new Units totaling 558 MW (gross combined);
- Operation as soon as 2013;
- Achievement of goals of the South Carlsbad Coastal Redevelopment Plan;
- Provision of new revenues to the City of Carlsbad of about $5MM per year;
- Provision of new energy supplies that are critically needed in San Diego by 2012;
- Consistency with State policy places the highest priority in new power projects that: (i) retire aging seawater cooled power plants; (ii) are "peaking" plants that provide backup power to intermittent renewable resources; (iii) are brownfield projects that reuse existing infrastructure; and (iv) improve GHG emission performance for the electric sector;
- Use of highly efficient natural-gas fueled generating units burn 30% less fuel, resulting in 30% better GHG performance;

- Replacement of 225 million gallons per day of ocean water for cooling with air cooling to protect marine life;
- Consistency with the City's goal to phase-out existing power plant for community and commercial redevelopment;

Furthermore, CECP will result in the following economic and development benefits:

- Construction workforce of 357 peak jobs and 237 jobs on average over a two-year construction period;
- Construction payroll exceeding $55 million;
- Locally purchased materials estimated at $30 million;
- Sales tax to California of approximately $22 million;
- Induced and indirect employment estimated to be over 500 jobs and additional indirect local income of $21 million;
- Use of existing infrastructure;
- Use of existing coastal property on which a power plant already exists;
- Reduction of impingement and entrainment of marine organisms; and
- Reduction in reliance on the Aqua Hedionda Lagoon.

Lastly, as noted in Section C above, *infra*, CECP at its proposed location will provide significant reliability and value within the Carlsbad area, the entire San Diego region, and the State of California. The proposed CECP location and the Encina Power Station site, located in the coastal zone, is the most logical place for CECP. The Coastal Act specifically contemplates the continued use of existing facilities and reasonable expansion of such uses within the Coastal Zone because the resources, infrastructure, and compatible uses already exist in the vicinity of existing power plants. (*See* Pub. Resources Code § 30260.) The CECP represents a long-standing planned effort to improve the region's critical electrical energy production infrastructure through the construction of a modern, more efficient power plant with the concurrent retirement

of three of the existing, older, less efficient units at the Encina Power Station.

It is clear that CECP is required for public convenience and necessity and has significant benefits. Further, there are not more prudent and feasible means of achieving public convenience and necessity. Therefore, the requirements of Public Resources Code section 25525 are met, thus mandating the issuance of override findings if the Commission first determines that CECP requires an override for Project approval.

Applicant believes that the case has been made to justify and override and is presenting no further testimony as to this subject matter.

III. APPLICANT'S WITNESSES

Witnesses identified to testify on behalf of Applicant are identified in the below table. Witnesses are identified by the area of expertise and an estimated time for direct examination is provided. However, Applicant reserves the right to revise time estimations based upon other parties' supplemental testimony. In addition, Applicant will provide to the parties a time estimate as to its time estimate for direct examination of Applicant's witnesses.

Topic	Witness	Time Estimate
PPA Impacts & Analysis	None	NA
LAND-2 & LAND-3 Issues	Scott Valentino	10 mins.
Grid Reliability	Brian Theaker	5 mins.
Air Quality, PSD Issues Only	Gary Rubenstein	NA
City Land Use LORS	Ronald Rouse	10 mins.
Override Issues	None	NA

IV. APPLICANT'S EXHIBITS

Applicant provides herein Exhibits A through F as such relate to the above related topics.

These Exhibits include the following:

Exhibit	Description/Title	Sponsored By
A	Declaration of & Professional Qualifications for Scott Valentino	Scott Valentino
A1	Letter from Dynegy to San Diego Unified Port District (10/25/2011)	Scott Valentino
B	Testimony of Brian Theaker re Grid Reliability	Brian Theaker
B1	Declaration of & Professional Qualifications for Brian Theaker	Brian Theaker
C	Declaration of Gary Rubenstein	Gary Rubenstein
D	Palmdale Hybrid Power Project's BACT Analysis	Gary Rubenstein
E	Palmdale Hybrid Power Project's PSD Permit	Gary Rubenstein
F	Declaration of Ronald Rouse	Ronald Rouse

V. CONCLUSION

Applicant's testimony as set forth herein, and in the record previously established for this proceeding, provides the Committee with the necessary environmental analysis and information to support a favorable decision for CECP. Applicant looks forward to participating in and completing the final evidentiary hearing in this proceeding and moving forward toward a Final Decision.

Date: November 18, 2011

Stoel Rives LLP

// Original Signed \\

_____
John A. McKinsey
Attorneys for Applicant
CARLSBAD ENERGY CENTER LLC

EXHIBIT A

DECLARATION OF SCOTT VALENTINO AND PROFESSIONAL QUALIFICATIONS

Declaration of
Scott Valentino
Carlsbad Energy Center Project
(07-AFC-6)

I, Scott Valentino, declare as follows:

1. I am presently employed by NRG Energy, Inc. as Vice President, Development for the West Region and am here on behalf of Carlsbad Energy Center LLC ("Applicant"). I am responsible for the development for the Carlsbad Energy Center Project ("CECP" or the "Project").

1. A copy of my professional qualifications and experience is included herewith as Attachment A.

2. I caused to be prepared or prepared testimony set forth in Section II.B of Applicant's Supplemental Testimony as such relates to the issues associated with proposed conditions of certification LAND-2 and LAND-3. My testimony is in support of the Application for Certification for CECP and is based on my independent analysis of data from reliable documents and sources and my professional experience and knowledge.

3. It is my professional opinion that the Applicant's proposed modifications to the conditions of certification, LAND-2 and LAND-3, are necessary so as not to impose an unbearable and inequitable financial burden on the Project. If such modifications to, or complete removal of, conditions of certification LAND-2 and LAND-3 are not presented in the Final Decision for CECP, the Project would be at a significant disadvantage in a competitive solicitation process and would likely never receive an offtake agreement required to support the financing and construction of the facility.

4. I am personally familiar with the facts and conclusions related in the testimony presented by me and, if called as a witness, could testify competently thereto.

I declare under penalty of perjury that the foregoing is true and correct to the best of my knowledge and belief.

11-17-2011
Date

Scott Valentino

Attachment A to Declaration of Scott Valentino

Summary of Professional Qualifications

Scott Valentino, currently Vice President, Development for the West region of NRG Energy, has directly worked in the energy sector for over 8 years. In his current role, Scott oversees development of natural gas power plants in California and represents the region in corporate M&A initiatives. Scott has extensive knowledge in the permitting, regulatory, and development sides of the business, including experience with a diverse set of technologies, configurations and OEM providers. Complimentary to his industry specific tenure, Scott also has an extensive background in valuation, risk management and hedging of both energy and commodities.

In his most recent role at NRG, Scott has been identifying and assessing incremental growth opportunities, including the optimization of existing generation facilities and underlying real estate assets. Scott joined the region after he led the acquisition of the remaining 50% interest in West Coast Power through the combination of a cash deal and a 50% asset swap in a non-strategic generation asset in Illinois. Since relocating to California in early 2006, Scott has led the divestiture of several assets in northern CA, while also playing an integral part in origination deals around the coastal assets in southern CA. Scott also oversaw the integration of commercial activities at West Coast Power formerly performed by Dynegy to NRG, which included trading and scheduling of both gas and power. Scott is responsible for negotiating the pricing and complete final terms of an Amended Power Purchase Agreement with Southern California Edison in 2010 to support the financing and construction of the El Segundo Energy Center Project ("ESEC"), a 550 MW fast start combined cycle facility in El Segundo, CA. Scott actively participated in negotiations with a consortium of lenders to secure third party financing for the ESEC project which closed in August, 2011. He was also responsible for the pricing and valuation of the Long Beach Peaker repower project that commenced commercial operations in August 2007. Through his development experience in California, Scott has established a thorough understanding of the non-recourse project finance structure and underlying requirements in contractual agreements to raise debt in stressed financial markets.

Prior to joining NRG Energy in 2005, Scott was Vice President of the Energy Group at Stern Stewart & Co where he led the implementation of the Economic Value Added Management System and performed corporate finance advisory services. On one of his projects for an $18 billion integrated natural gas company, Scott performed and presented a valuation of the company's power generation business to the Executive Officer Team and the Board of Directors, which resulted in them holding onto the business for successful future profit generation. Scott spent several years living in Brazil with the company doing corporate advisory and M&A, and as a result, is also fluent in Portuguese.

Scott graduated Cum Laude from the Wharton School at the University of Pennsylvania with a Bachelor of Science in Economics and a dual concentration in Finance and Accounting.

EXHIBIT A1

LETTER FROM DYNEGY TO THE SAN DIEGO UNIFIED PORT DISTRICT
(DATED OCTOBER 25, 2011)

Dynegy South Bay, LLC
1000 Louisiana, Suite 5800
Houston, Texas 77002
Phone 713.507.6400

CONFIDENTIAL SETTLEMENT COMMUNICATION

October 25, 2011

Duane E. Bennett, Esq.
Port Attorney
San Diego Unified Port District
3165 Pacific Highway
San Diego, CA 92112-0488

Re: Demolition of South Bay Power Plant

Dear Mr. Bennett:

I am writing in response to your letter dated October 14, 2011 and to formalize confidential negotiations that have occurred between Dynegy South Bay, LLC ("Dynegy") and the San Diego Unified Port District ("Port") concerning the demolition of the South Bay Power Plant (the "Project"), in accordance with Section 18.1 of the April 1, 1999 Lease between the parties. The Port, acting as property owner and landlord, and Dynegy, acting as operator and tenant, have come to the following agreement with respect to the contractual obligations of the parties.

As we have discussed, Dynegy is willing, subject to the conditions outlined below, to approach the Project as a two-step process of removal of above ground structures and a subsequent removal of subsurface structures and in-water structures to a depth of four feet below-grade as a second phase. We will accordingly submit the Coastal Development Permit ("CDP") application to the California Coastal commission ("CCC") in two-parts if each of the below conditions are agreed to by the Port, understanding that each condition will apply to both the first and second phase of the Project if it goes forward as a two-step process. In the event a third-party successfully challenges the two-part CDP, all of the conditions except item 10 shall continue to apply to a single-phase Project.

Dynegy recognizes that the Port cannot modify or waive any rights or powers already held by other non-related parties, such as SDG&E and the City of Chula Vista and this agreement does not intend to do so, nor create any rights or obligations for said third-parties. Further, Dynegy and the Port assert that this agreement does not modify any other rights or remedies in the various agreements in place, other than on those specific points addressed herein.

The Port requested that Dynegy restore the natural hydrology of the Bay through a method recommended by a qualified hydrologist or coastal engineer. Dynegy retained a qualified expert and based on the field research and computer modeling, Dynegy's expert has advised that: a) the jetties do not impact the inter-tidal action and natural hydrology of the San Diego Bay; b) the impacts of these structures on the inter-tidal flow of the San Diego Bay are negligible, and likely

Dynegy South Bay, LLC
1000 Louisiana, Suite 5800
Houston, Texas 77002
Phone 713.507.6400

non-existent; c) modifying the central jetty on Tidelands #2 Lease would have detrimental effects on the local ecology, particularly a mature and healthy marine eelgrass bed as well as having impacts to the local colony of sea turtles; and d) removing the jetties would increase the turbidity and salinity of the local portion of the San Diego Bay, which would further and negatively impact the local ecology. Therefore, Dynegy has fulfilled the District's request.

1. The Port must waive its right to require Dynegy to demonstrate by April 2014, as set forth in Section 1.1(f) of the Asset Sale Agreement, that contamination in the "Blue is You" areas is "Existing Soils Contamination" and thus outside the scope of Dynegy's remediation obligation. Dynegy will now be entitled to a period of 12 months after completion of the below-ground demolition work to make said demonstration;

2. Dynegy will leave the existing storm drain system in place, including all drain lines that lie within the first four feet of soil, and will be allowed to grade the site so that storm water runoff will be collected in that system;

3. Dynegy will leave the north and central jetties located on Tidelands Lease #2 in place. At Dynegy's option, the south jetty located on Tidelands Lease #3 will also be left in place. These jetties shall remain unmodified by Dynegy to avoid damage to the local ecology. The Port will permanently and irrevocably waive its right to require Dynegy to remove any of the jetties;

4. Dynegy will remove the entirety of the cement foundation of the Power Block, without regard to the four-foot limitation on its demolition obligation. However, removal of the below-grade portions of the structure will be deferred to the second phase of demolition;

5. The utility bridges that extend over the intake and discharge channels will be cut off at the floor of the channels, and sediments will not be disturbed except as incidental to that operation. All footings and foundations that lie beneath the floor of the channels will be left in place. This work will be done during the second phase of demolition;

6. The concrete intake structures will be excavated a distance of four feet from the top of the structure. The remaining portion of the structures (the wing walls) will be trimmed and backfilled and rip-rap will be added along the shoreline to match the existing adjacent grade on both sides of the intake. This work will be done during the second phase of demolition;

7. The cooling water discharge pipes and their associated discharge housings are located more than four feet below Surface Level. Accordingly, these structures will not be removed. The discharge housings will be filled with rock to prevent entry by divers or wildlife. This work will be done during the second phase of demolition;

8. The Port confirms its previous statements that the project for above ground demolition will not trigger a discretionary approval at the District and will work with Dynegy to obtain formal confirmation from the City of the same. Dynegy and the Port understand that CCC will

Dynegy South Bay, LLC
1000 Louisiana, Suite 5800
Houston, Texas 77002
Phone 713.507.6400

serve as the lead agency for the CEQA equivalent environmental assessment and all environmental compliance;

9. The Port will support CCC as lead agency for the CEQA equivalent environmental assessment for the below ground demolition project unless, at that time, the Commission no longer has jurisdiction to issue a Coastal Development Permit for the work;

10. The Port will reimburse Dynegy for any incremental mobilization /demobilization incurred in connection with bifurcation of the demolition project in an amount not to exceed $100,000 with proper documentation and proof of expenses;

11. Dynegy has submitted concurrently with this letter a demolition timeline and comprehensive schedule and cash flow projections for Dynegy's end of term actions; and

12. The Port and Dynegy will reexamine and, where appropriate, Dynegy will resubmit all outstanding amounts that have not been approved for payment out of the Escrow Account by the Port.

If this proposal is acceptable to the Port, please so indicate by signing and returning a copy of this letter to me. We will be prepared to submit the CDP application to the CCC for the above-ground demolition work within 15 days of receipt of the countersigned copy of this letter.

If we do not hear from you in writing by close of business on October 26, or if your response differs materially from the terms and conditions outlined above, our intention is to revise the Project Description as necessary to conform with our contractual demolition obligation and submit the CDP application to the CCC when it is complete. As suggested by Port staff, we will also explain in our cover letter to the CCC that Dynegy views its remedial obligations at the South Bay Power Plant, if any, as highly speculative and indeterminate at this time and therefore outside the scope of the project.

We have endeavored to formulate a proposal that works to the benefit of all parties and the public, and we look forward to your favorable response.

Dynegy South Bay, LLC
1000 Louisiana, Suite 5800
Houston, Texas 77002
Phone 713.507.6400

Very truly yours,

Joshua H.B. Farkas
Dynegy Operating Company,
as legal services provider to Dynegy South Bay, LLC

THE SAN DIEGO UNIFIED PORT DISTRICT HEREBY AGREES TO AND ACCEPTS THE TERMS AND CONDITIONS SET FORTH ABOVE:

By: Wayne Darbeau

Title: President & CEO

Date: October 25th, 2011

cc: Beck Mayberry
Larry Randel
Barb Irwin
Jim Tharp
Marty Daley
Jason Buchman
Meg Rosegay, Pillsbury

APPROVED AS TO FORM AND LEGALITY

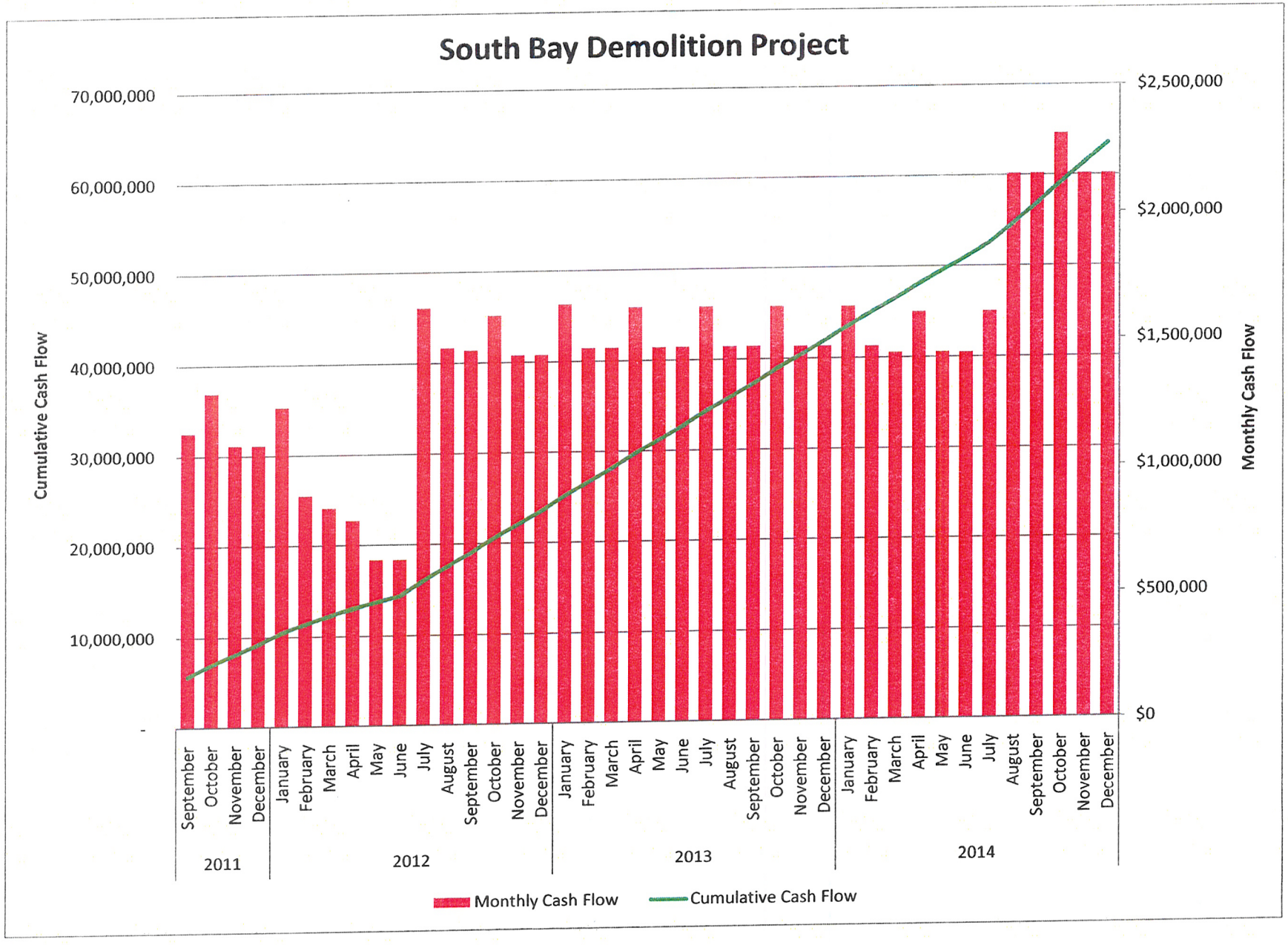
South Bay Demolition Project
Cumulative Cash Flow
Monthly Cash Flow
70,000,000
60,000,000
50,000,000
40,000,000
30,000,000
20,000,000
10,000,000
-
$2,500,000
$2,000,000
$1,500,000
$1,000,000
$500,000
$0
September
October
November
December
January
February
March
April
May
June
July
August
September
October
November
December
January
February
March
April
May
June
July
August
September
October
November
December
January
February
March
April
May
June
July
August
September
October
November
December
2011
2012
2013
2014
Monthly Cash Flow
Cumulative Cash Flow

ID	Task Name	Duration	Start	Finish
1				
2	**Initial Demolition Activities**	**175 days**	**Tue 8/2/11**	**Mon 4/2/12**
3	Salvage Work	30.2 wks	Mon 9/5/11	Mon 4/2/12
4	Asbestos Work	35 wks	Tue 8/2/11	Mon 4/2/12
5				
6				
7				
8	**Permitting**	**335 days**	**Wed 11/16/11**	**Tue 2/26/13**
9	Submit Above Ground Application to the CCC	0 days	Wed 11/16/11	Wed 11/16/11
10	Prepare Below Ground Application to the CCC	6 wks	Wed 11/16/11	Tue 12/27/11
11	CCC Processing Above Ground App.	26 wks	Wed 11/16/11	Tue 5/15/12
12	CCC Processing Below Ground App.	52 wks	Wed 12/28/11	Tue 12/25/12
13	Obtain All Permits Above Ground Demo	9 wks	Wed 5/16/12	Tue 7/17/12
14	All Permits In Place for Above Ground Demo	0 days	Tue 7/17/12	Tue 7/17/12
15	Obtain All Permits Below Ground Demo	9 wks	Wed 12/26/12	Tue 2/26/13
16	All Permits in Place for Below Ground Demo	0 days	Tue 2/26/13	Tue 2/26/13
17				
18				
19				
20	**Above Ground Demolition**	**422 days**	**Mon 12/5/11**	**Tue 7/16/13**
21	Procure Prime Contractor	12 wks	Mon 12/5/11	Fri 2/24/12
22	Above Ground Demolition	52 wks	Wed 7/18/12	Tue 7/16/13
23	Complete Above Ground Demolition	0 days	Tue 7/16/13	Tue 7/16/13
24				
25				
26				
27	**Below Ground Demolition**	**381 days**	**Wed 7/17/13**	**Wed 12/31/14**
28	Below Ground Demolition	76.2 wks	Wed 7/17/13	Wed 12/31/14
29	Complete Below Ground Demolition	0 days	Wed 12/31/14	Wed 12/31/14

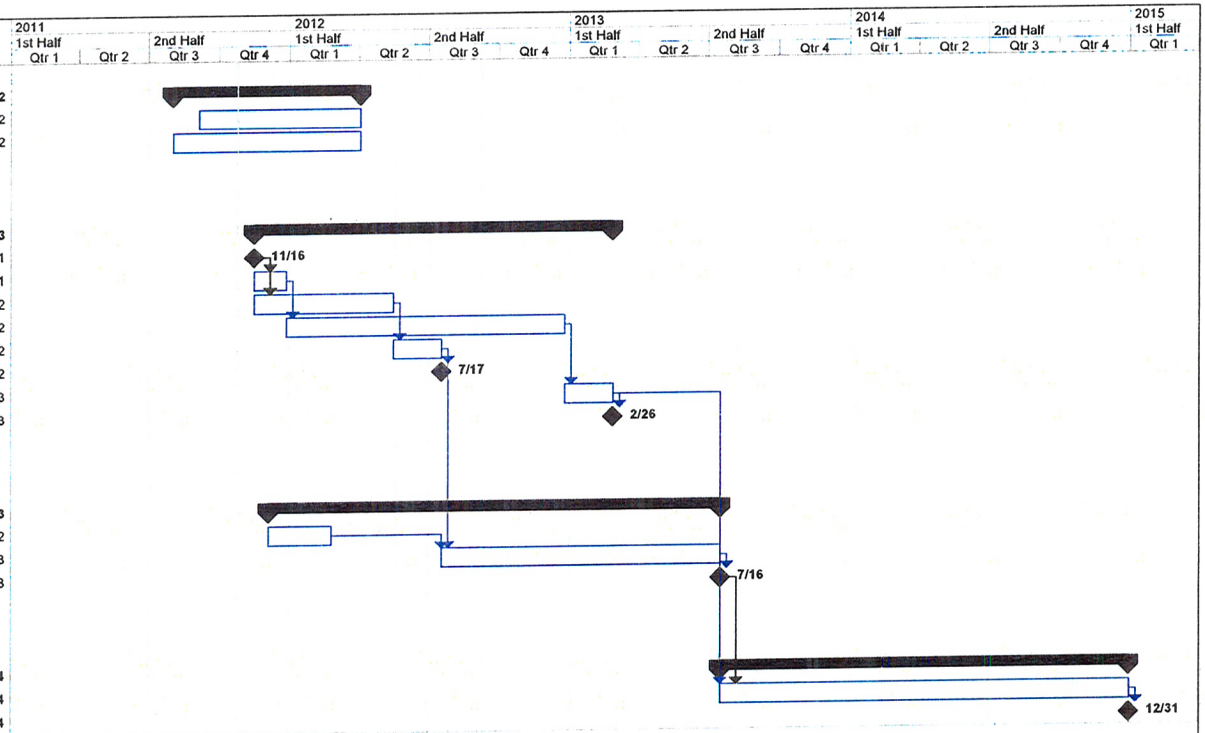

Project: Project Schedule 10-24-2011
Date: Tue 10/25/11

Task | Progress | Summary | External Tasks | Deadline
Split | Milestone | Project Summary | External Milestone

EXHIBIT B

TESTIMONY OF BRIAN THEAKER (GRID RELIABILITY)

Applicant's Testimony for
Grid Reliability

Applicant's Witness: **Brian Theaker** *Date:* **November 18, 2011**

Q. Please state your name and business address.

A. My name is Brian Theaker. My business address is 3161 Ken Derek Lane, Placerville, California.

Q. Please state your professional background.

A. I have worked in the electric power industry since 1983 in a number of different roles. I worked as a field test engineer and system security and reliability engineer for the Los Angeles Department of Water and Power (LADWP) from 1983 to 1997. In the latter role, I analyzed a number of major bulk power outages, in addition to conducting studies and developing procedures for maintaining the reliability of LADWP's bulk system. I was a member of the task forces that investigated and prepared the disturbance reports for the west-wide disturbance that was initiated by the January 17, 1994 Northridge earthquake; and the July 2, 1996 and August 10, 1996 west-wide system disturbances. I chaired the Western Electricity Coordinating Council's (WECC's) Minimum Operating Reliability Criteria Work Group from 1998-1999. I have been a member of WECC's Board of Directors since 2008. I am currently the vice-chair of WECC's Reliability Policy Issues Committee, and chaired WECC's Bulk Electric System Definition Task Force from 2008 to 2010. I was on the start- up team for the California Independent System Operator Corporation (CAISO). I worked for the CAISO from 1997 to 2005 in various roles, including as an operating engineer, the manager of the operations engineering group, and the director of regulatory affairs. I was directly involved in the development of the CAISO's Reliability Must-Run agreements and managed the group that negotiated and administered those contracts from 1999 to 2001. Most recently, I have managed federal and state regulatory affairs for Williams Power Company, Dynegy, and my current employer, NRG Energy, Inc., for whom I currently serve as Director of Market Affairs.

Q. On whose behalf are you testifying, and what is NRG's interest in this proceeding?

A. I am testifying on behalf of NRG Energy, Inc. NRG's interest in this proceeding is in demonstrating how a project to be located in the San Diego area at an existing generation

site that is currently seeking a permit from the California Energy Commission would provide reliability benefits to the San Diego area.

Q. What is the purpose of your testimony?

A. The purpose of my testimony is to describe how the proposed Carlsbad Energy Center Project (CECP) would enhance the reliability of bulk power operations in the San Diego area and in the high voltage transmission system operated by the CAISO. The reliability of the San Diego are bulk power system has come under increased scrutiny following the widespread blackout of that area and parts of Arizona and Mexico on September 8, 2011.

Q. What caused the widespread power outage on September 8, 2011?

A. The causes of the outage are still under investigation by several entities, including the CAISO, the North American Electric Reliability Corporation (NERC) and the Federal Energy Regulatory Commission (FERC). The initial event in the sequence of events that eventually led to the outage is well known – the trip of the Hassayampa-North Gila 500 kV transmission line. However, system planning criteria mandate that the loss of a single power system element shall not lead to the kind of cascading outages that led to the outage. There is no evidence that the system was being operated in violation of these criteria. Therefore, it is not yet clear how all of the events of September 8 contributed to the outage, and whether the events that took place are related (i.e., one event led to another) or coincidental.

Q. What reliability benefits would CECP provide to the San Diego area?

A. CECP would provide several benefits.

In general, any area that depends on imported power to serve demand within that area is susceptible to disruptions in service if the import lines are removed from service. The San Diego bulk power system is currently interconnected to the United States portion of the Western Interconnection via two transmission paths: (1) the Southwest Power Link (SWPL), a 500 kV transmission line that runs from Arizona to the southeast part of the San Diego area, and (2) a series of 230 kV lines that run from the San Onofre Nuclear Generating Station (SONGS) southward into the San Diego area. While the specific causes of the San Diego outage are still being investigated, the general nature of the outage is understood. The loss of the import transmission from the east (the SWPL), along with other events that occurred within the area, increased the amount of power being imported on the 230 kV lines bring power into San Diego from the north. As events unfolded, the amount of power being carried on these lines increased and eventually triggered protection systems that tripped these lines, blacking out the area.

The Sunrise 500 kV line, slated to be in service in 2012, will increase the amount of power that can be carried into the San Diego area from the Imperial Valley substation to the west. However, the Sunrise line shares a right-of-way with the Southwest Power Link for a distance. This means both lines could be taken out of service by a common local event (e.g., fire, earthquake). While the probability of this common outage may be small, it is not zero. Under those circumstances, San Diego may find itself in a situation similar to the situation that led to the September 8 outage.

On September 8, approximately eleven minutes passed between the time of the loss of the SWPL and the loss of the 230 kV lines that blacked out the San Diego area. Increasing the output of generation within the San Diego area would have reduced the amount of power being brought into San Diego over the lines that eventually overloaded and were taken out of service by protective equipment. Increasing the level of generation within the San Diego area would have reduced the power flowing south on those import lines. Please note I am not asserting that quickly bringing up generation in San Diego would have prevented the September 8th blackout. The ability of in-area generation to prevent a similar blackout would depend on a number of factors, including how much power is being imported, how much in-area generation is on-line and where that generation is operating at the time. If the San Diego area is importing a large amount of power relative to the power being provided from in-area generation, it may not be possible to bring up generation quickly enough to prevent overloading the remaining lines. However, quick-start facilities like the CECP provide the ability to increase quickly in-area power in response to the loss of import transmission. As such, CECP would enhance the reliability of the San Diego area, which cannot serve all of its demand through power imported into the area.

Second, even if CECP generation could not be increased quickly enough to prevent a future event similar to the September 8 blackout, the CECP quick-start combustion turbines would be able to better assist in restoring service to a blacked-out area. While the steam turbine units at Encina performed well in helping to restore service following the September 8 blackout, the CECP units should be able to help restore service following a widespread outage even more quickly.

Third, CECP enhances the reliability of the San Diego area by providing reactive power support to the northern San Diego and southern Orange County areas. Reactive power is critical to maintaining acceptable voltage profiles within the bulk power system. (Voltage profiles in an electric delivery system are roughly comparable to local pressures in a water delivery system). Local reactive power sources are needed to maintain the voltage profiles that allow power to be reliably imported into the area from remote sources. Further, the reactive power provided from synchronous machines like CECP can be adjusted by varying the terminal voltage of those machines. Consequently, the

amount of reactive power from CECP can be varied independent of the local voltage (though the local voltage will constrain the maximum amount of reactive power that can be provided from synchronous machines). In contrast, reactive power from static devices such as capacitors varies with local voltage. If local voltage decreases, the reactive power output provided by capacitors decreases, which then reduces the voltage. Under some conditions, if unchecked, this reduction in voltage can lead to a voltage collapse. While there is yet no evidence that voltage collapse contributed to the September 8 blackout, local dynamic reactive power support provided by synchronous machines provides greater reliability benefits than static – or no – local reactive power support. Moreover, the reactive power support provided by CECP could be even more valuable if SONGS is not relicensed.

In summary, relying on imported power to serve demand within an area exposes the demand in that area to service disruptions if the transmission bringing power to that region is lost. Local generation both provides the ability to respond to the loss of import transmission and helps maintain acceptable voltage profiles within the region.

Q. Does CECP generation provide any benefits to reliable system operation other than the ones described above?

A. Yes. The flexible (i.e., able to reduce or increase output in response to CAISO instruction) CECP generation will assist the CAISO in dealing with the operation challenges of dealing with the variability of increasing amounts of renewable generation that will be coming on-line over the next decade to help meet California's goal of serving 33% of its demand with renewable energy. Inasmuch as much of the renewable energy slated to come on-line over the next decade will be added in the area east of the San Diego area, having flexible generation in the San Diego area will provide an added benefit, as it will help the CAISO manage variability locally. Managing variability with non-local generation will cause power to flow over a larger portion of the bulk power network (e.g., if solar output decreased in the San Diego area, bringing up generation in Northern California to balance the loss in solar output would cause power to flow north to south across Patch 16 and Path 26). Being able to manage variability local will help CAISO operators avoid other possible system network effects.

EXHIBIT B1

DECLARATION OF BRIAN THEAKER AND PROFESSIONAL QUALIFICATIONS

Declaration of
Brian Theaker
Carlsbad Energy Center Project
(07-AFC-6)

I, Brian Theaker, declare as follows:

1. I am presently employed by NRG Energy, Inc. ("Applicant") as the Director of Market Affairs.

1. A copy of my professional qualifications and experience is included herewith as Attachment A.

2. I caused to be prepared or prepared testimony set forth in Section II.C of Applicant's Supplemental Testimony as such relates to the issues associated with the benefits to grid reliability that the Carlsbad Energy Center Project would provide. My testimony is in support of the Application for Certification for CECP and is based on my independent analysis of data from reliable documents and sources and my professional experience and knowledge.

3. It is my professional opinion that the Applicant's proposed Project and location would provide substantial benefits to the reliability of the bulk power system in the San Diego area.

4. I am personally familiar with the facts and conclusions related in the testimony presented by me and, if called as a witness, could testify competently thereto.

I declare under penalty of perjury that the foregoing is true and correct to the best of my knowledge and belief.

11-18-2011
Date

Brian Theaker

71017109.1 0035-134-00009

Attachment A to Declaration of Brian Theaker

Summary of Professional Qualifications

Brian Theaker, currently Director of Market Affairs for the West region of NRG Energy, Inc., has directly worked in the electric industry for 28 years. In his current role, Brian oversees federal and state regulatory and market affairs for NRG Energy West and its associated natural gas-fired and solar generating facilities.

Brian's experience in the electric industry includes high voltage testing, special field testing of power system equipment and phenomena, power system analysis (including load flow and composite reliability analysis), disturbance analysis and reporting, contract development and administration, and power market design. Notable projects Brian was involved in or led include: the analysis and preparation of detailed disturbance reports for three west-wide power system disturbances in 1994 and 1996; the development and deployment of personal computer-based operations support software, including demand forecasting, economic dispatch, outage tracking and analysis, and hydro-thermal optimization; and the development and administration of Reliability Must-Run contracts.

After receiving a Bachelor's of Electrical Engineering degree specializing in power systems from the Ohio State University in 1983, Brian began work for the Los Angeles Department of Water and Power as a special test engineer and supervising engineer for their high voltage laboratory. In 1986, Brian transferred to the Security Assessment Group of LADWP's operations division, where he performed power flow studies, dealt with system operations and reliability issues, developed operations support software, and prepared and presented disturbance reports. In 1997, Brian joined the start-up team of the California Independent System Operator Corporation (CAISO). There, Brian was directly involved in the development and administration of contracts covering over 15,000 MW of Reliability Must-Run generation. After becoming the CAISO's Director of Regulatory Affairs in 2001, Brian led complex stakeholder processes, chaired the CAISO's Market Design Steering Committee, and prepared and oversaw the preparation of state and federal regulatory filings. In 2005, Brian joined Williams Power Company as Williams' Regional Governmental Affairs manager, where he managed federal and state regulatory affairs for Williams' position of 4,000 MW of gas-fired generation. When Williams sold their power business in 2007, Brian joined Dynegy and managed federal and state regulatory affairs for Dynegy's 3800 MW fleet until March 2011, when he joined NRG Energy.

In 2008, Brian was elected to the Board of Directors for the Western Electricity Coordinating Council (WECC) – a position to which he was re-elected in 2011. Brian's responsibilities with WECC included chairing WECC's Bulk Electric System Definition Task Force, and currently serving as vice-chair of WECC's Reliability Policy Issues Committee and chair of the Regional Criteria Work Group.

Brian is a registered Professional Engineer in California, and earned an MBA from Pepperdine University in 1989.

EXHIBIT C

DECLARATION OF GARY RUBENSTEIN

Declaration of
Gary Rubenstein
Carlsbad Energy Center Project
(07-AFC-6)

I, Gary Rubenstein, declare as follows:

1. I am presently employed by Sierra Research, Inc. under contract with Carlsbad Energy Center LLC to provide environmental consulting services for the Carlsbad Energy Center Project ("CECP").

2. A copy of my professional qualifications and experience has been previously submitted to this Committee for testimony previously presented in this proceeding.

3. I caused to be prepared or prepared testimony set forth in Section D of Applicant's Supplemental Testimony as such relates to the topic of air quality and Federal Prevention of Significant Deterioration Permit issues. My testimony is in support of the Application for Certification for CECP and is based on my independent analysis of data from reliable documents and sources and my professional experience and knowledge. In addition to Applicant's Supplemental Testimony, I presented testimony for this proceeding at prior evidentiary hearings regarding air quality and public health issues.

4. It is my professional opinion that the information provided to the California Energy Commission related to the CECP AFC proceeding is valid and accurate with respect to the issues addressed herein.

5. I am personally familiar with the facts and conclusions related in the testimony presented by me and, if called as a witness, could testify competently thereto.

I declare under penalty of perjury that the foregoing is true and correct to the best of my knowledge and belief.

Nov. 17, 2011
Date

Gary Rubenstein

EXHIBIT D

PALMDALE HYBRID POWER PROJECT'S BACT ANALYSIS

U.S. ENVIRONMENTAL PROTECTION AGENCY
REGION IX

FACT SHEET AND
AMBIENT AIR QUALITY IMPACT REPORT

For a Clean Air Act
Prevention of Significant Deterioration Permit

Palmdale Hybrid Power Project
PSD Permit Number SE 09-01

August 2011

This page left intentionally blank.

PROPOSED PREVENTION OF
SIGNIFICANT DETERIORATION PERMIT
PALMDALE HYBRID POWER PROJECT
Fact Sheet and Ambient Air Quality Impact Report
(PSD Permit SE 09-01)

Table of Contents

Acronyms & Abbreviations i
Executive Summary 1
1. Purpose of this Document 1
2. Applicant 1
3. Project Location 2
4. Project Description 3
5. Emissions from the Proposed Project 7
6. Applicability of the Prevention of Significant Deterioration Regulations 9
7. Best Available Control Technology 12
7.1 BACT for Natural Gas Combustion Turbine Generators 16
7.1.1 Nitrogen Oxide Emissions 16
7.1.2 Carbon Monoxide Emissions 20
7.1.3 PM, PM_{10} and $PM_{2.5}$ Emissions 23
7.1.4 GHG Emissions 27
7.1.5 BACT During Startup and Shutdown 31
7.2. BACT for Auxiliary Boiler and Heater 32
7.2.1 Nitrogen Oxide Emissions 32
7.2.2 Carbon Monoxide Emissions 33
7.2.3 PM, PM10 and PM2.5 Emissions 34
7.2.4 GHG Emissions 37
7.3 BACT for Emergency Internal Combustion Engines 38
7.3.1 NO_X, CO, PM, PM10, PM2.5, and GHG Emissions 38
7.4 BACT for Cooling Tower 40
7.5 BACT for Fugitive Road Dust 43
7.6 BACT for Circuit Breakers 45
7.6.1 GHG 45
8. Air Quality Impacts 46
8.1 Introduction 47
8.1.1 Overview of PSD Air Impact Requirements 47
8.1.2 Identification of PHPP Modeling Documentation 48
8.2. Background Ambient Air Quality 49
8.3 Modeling Methodology for Class II areas 50
8.3.1 Model selection 50
8.3.2 Meteorology model inputs 51
8.3.3 Land characteristics model inputs 51
8.3.4 Model receptors 52
8.3.5 Load screening and stack parameter model inputs 53

8.3.6 Good Engineering Practice (GEP) Analysis 54
8.4 National Ambient Air Quality Standards and PSD Class II Increment Consumption Analysis 55
8.4.1 Pollutants with significant emissions 55
8.4.2 Preliminary analysis: Project-only impacts 55
8.4.3 Cumulative impact analysis 56
8.5 Class I Area Analysis 62
8.5.1 Class I Increment Consumption Analysis 63
8.5.2 Visibility and Deposition in Class I areas 63
9. Additional Impact Analysis 65
9.1 Soils and Vegetation 66
9.2 Visibility Impairment 68
9.3 Growth 68
10. Endangered Species 69
11. Environmental Justice Analysis 70
12. Clean Air Act Title IV (Acid Rain Permit) and Title V (Operating Permit) 70
13. Comment Period, Hearing, Public Information Meeting, Procedures for Final Decision, and EPA Contact 70
14. Conclusion and Proposed Action 73

Acronyms & Abbreviations

Act	Clean Air Act [42 U.S.C. Section 7401 et seq.]
ACC	Air Cooled Condenser
AFC	Application for Certification
Agency	U.S. Environmental Protection Agency
AQMD	Air Quality Management District
b_{ext}	Light extinction coefficient
BA	Biological Assessment
BACT	Best Available Control Technology
BTU	British thermal units
CAA	Clean Air Act [42 U.S.C. Section 7401 et seq.]
CEC	California Energy Commission
CEMS	Continuous Emissions Monitoring System
CFR	Code of Federal Regulations
CO	Carbon Monoxide
CT	Combustion Turbine
CTG	Combustion Gas Turbine
DLN	Dry Low NO_x
GE	General Electric
GHG	Greenhouse Gas (Greenhouse Gases)
g/hp-hr	grams per horsepower-hour
gr/scf	Grains per Standard Cubic Feet
EAB	Environmental Appeals Board
EPA	U.S. Environmental Protection Agency
ESA	Endangered Species Act
ESP	Electrostatic Precipitator
FWS	U.S. Fish and Wildlife Service
HHV	Higher Heating Value
HP	Horsepower
HRSG	Heat Recovery Steam Generator
HTF	Heat Transfer Fluid
IRIS	Integrated Risk Information System
ISO	International Organization for Standards
km	Kilometers
kW	Kilowatts of electrical power
kWhr	Kilowatt-hour
mg/L	Milligrams per liter
$\mu g/m^3$	Microgram per Cubic Meter
MMBTU	Million British thermal units
MW	Megawatts of electrical power
NAAQS	National Ambient Air Quality Standards
NESHAPS	National Emission Standards for Hazardous Air Pollutants
NMHC	Non-methane Hydrocarbons

NO	Nitrogen oxide or nitric oxide
NO_2	Nitrogen dioxide
NO_x	Oxides of Nitrogen ($NO + NO_2$)
NP	National Park
NSPS	New Source Performance Standards, 40 CFR Part 60
NSR	New Source Review
O_2	Oxygen
PHPP	Palmdale Hybrid Power Project
PM	Total Particulate Matter
$PM_{2.5}$	Particulate Matter less than 2.5 micrometers (μm) in diameter
PM_{10}	Particulate Matter less than 10 micrometers (μm) in diameter
PPM	Parts per Million
PPMVD	Parts per Million by Volume, on a Dry basis
PSD	Prevention of Significant Deterioration
PTE	Potential to Emit
PUC	Public Utilities Commission
RATA	Relative Accuracy Test Audit
RBLC	U.S. EPA RACT/BACT/LAER Information Clearinghouse
SIL	Significant Impact Level
SF_6	Sulfur Hexafluoride
SNCR	Selective Non-Catalytic Reduction
SO_2	Sulfur Dioxide
SO_x	Oxides of Sulfur
STG	Steam Turbine Generator
TDS	Total Dissolved Solids
TPY	Tons per Year
VV2	Victorville 2 (Hybrid Power Project)
WA	Wilderness Area

Proposed Prevention of Significant Deterioration (PSD) Permit Fact Sheet and Ambient Air Quality Impact Report

PALMDALE HYBRID POWER PROJECT

Executive Summary

The City of Palmdale has applied to EPA Region 9 (EPA) for authorization under the Clean Air Act (CAA) Prevention of Significant Deterioration (PSD) program to construct a new power plant that will generate 570 megawatts (MW, nominal) of electricity using natural gas and solar energy. The power plant, known as the Palmdale Hybrid Power Project (PHPP or Project), will be located in the town of Palmdale, in Los Angeles County, California. EPA is issuing a proposed PSD permit for the PHPP, which is consistent with the requirements of the PSD program for the following reasons:

- The proposed PSD permit requires the Best Available Control Technology (BACT) to limit emissions of nitrogen oxides (NO_x), carbon monoxide (CO), total particulate matter (PM), particulate matter under 10 micrometers (μm) in diameter (PM_{10}), particulate matter under 2.5 (μm) in diameter ($PM_{2.5}$), and greenhouse gases (GHG), to the greatest extent feasible;

- The proposed emission limits will protect the National Ambient Air Quality Standards (NAAQS) for nitrogen dioxide (NO_2), CO, PM_{10}, and $PM_{2.5}$. There are no NAAQS for PM or Greenhouse Gases.

- The facility will not adversely impact soils and vegetation, or air quality, visibility, and deposition in Class I areas, which are parks or wilderness areas given special protection under the Clean Air Act.

1. Purpose of this Document

This document serves as the Fact Sheet and Ambient Air Quality Impact Report (Fact Sheet/AAQIR) for the proposed PSD permit for the City of Palmdale's Project. This document describes the legal and factual basis for the proposed PSD permit, including requirements under the CAA, including CAA section 165 and the PSD regulations at Title 40 of the Code of Federal Regulations (CFR) section 52.21. This document also serves as a Fact Sheet for the proposed PSD permit per 40 CFR section 124.8.

2. Applicant

The name and address of the applicant is as follows:

City of Palmdale
38300 Sierra Highway, Suite A
Palmdale, CA 93550

3. Project Location

The proposed location for the Palmdale Hybrid Power Project is 950 East Avenue M, Palmdale, California 93550. It is located on an approximately 333-acre parcel west of the northwest corner of Air Force Plant 42, and east of the intersection of Sierra Highway and East Avenue M. The City of Palmdale is located within the Antelope Valley Air Quality Management District (District).

The map below shows the approximate location of the proposed Project.

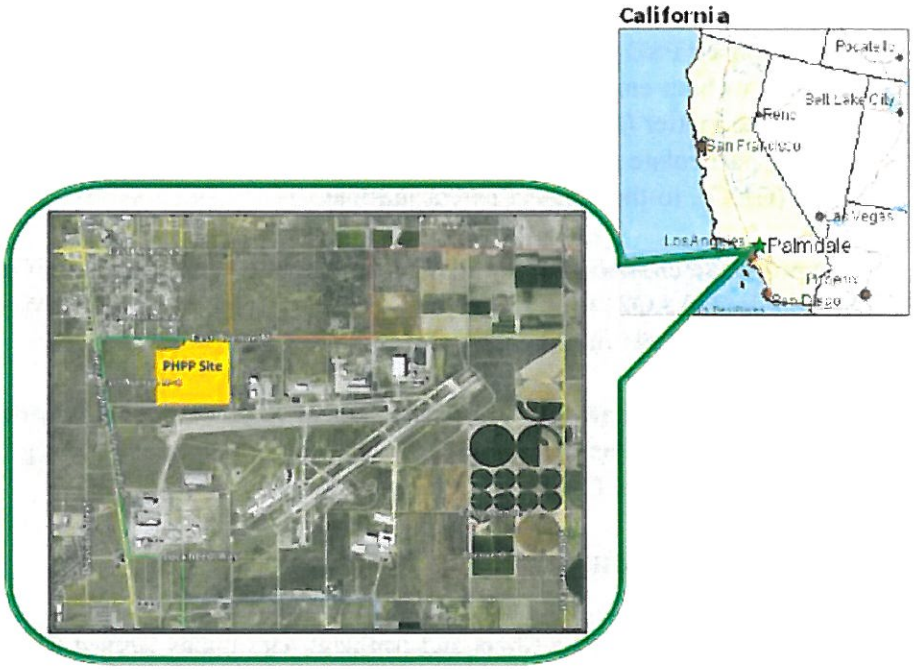

4. Project Description

The City of Palmdale has submitted to EPA an application for a PSD permit for the PHPP. The City of Palmdale's application materials for the PSD permit for the Project are included in EPA's administrative record for EPA's proposed PSD permit. The PHPP will be owned by the City of Palmdale and the development of the Project will be managed by Inland Energy.

We note that the City of Palmdale also has submitted applications for State and local construction approvals for the Project that are separate from EPA's PSD permitting process. These applications are referred to as an Application for Certification (AFC) submitted to the California Energy Commission (CEC) and an application for a Determination of Compliance (DOC) submitted to the District. The District issued a final DOC for the Project on May 13, 2010. The CEC issued its Final Commission Decision approving the Project's Application for Certification on August 10, 2011 (08-AFC-09).

The PHPP is designed to use solar technology to generate a portion of the Project's output. Primary equipment for the generating facility will include two General Electric (GE) Frame 7FA natural gas-fired combustion turbine-generators (CTGs) rated at 154 megawatt (MW, gross) each, two heat recovery steam generators (HRSGs), one steam turbine generator (STG) rated at 267 MW, and 251 acres of parabolic solar-thermal collectors with associated heat-transfer equipment. The Project will have an electrical output of 570 MW (nominal) or 563 MW (net). The GE CTG incorporates the "Rapid Start Process" (RSP), which allows for shorter startup durations of the gas turbines. Table 4-1 lists the equipment that will be regulated by this PSD permit:

Table 4-1: Equipment List

Equipment	Description
Two natural gas-fired GE 7FA Rapid Start Process combustion turbine generators (CTG) with Heat Recovery Steam Generators (HRSG)	• Each 154 MW (gross) CTG, with a maximum heat input rate of 1,736 MMBtu/hr (HHV) • Equipped with natural gas duct burners, rated at 500 MMBtu/hr (HHV) for each turbine system • Each CTG vented to a dedicated Heat Recovery Steam Generator (HRSG) and a shared 267 MW Steam Turbine Generator (STG) • Emissions of NO_X and CO controlled by Dry Low-NO_X (DLN) Combustors, Selective Catalytic Reduction (SCR), and an Oxidation Catalyst (Ox-Cat)
Auxiliary Boiler	• 110 MMBtu/hr (HHV) with ultra low-NO_X burner, fired on natural gas
Emergency Diesel-fired Internal Combustion (IC) Engine	• 2,000 kW (2,683 hp) • 40 CFR Part 60, Subpart IIII emission standards • California Air Resources Board Tier 2 emission standards
Emergency Diesel-fired IC Firewater Pump Engine	• 182 hp (135 kW) • 40 CFR Part 60, Subpart IIII emission standards • California Air Resources Board Tier 3 emission standards
Auxiliary Heater	• 40 MMBtu/hr (HHV) with ultra low-NO_X burner, fired on natural gas
Cooling Tower	• 130,000 gallons per minute maximum circulation rate • Total dissolved solids (TDS) concentration in makeup water of 5,000 ppm (531 mg/L) • Drift eliminator with drift losses less than or equal to 0.0005 percent based on circulation rate
Circuit Breakers	• Enclosed-pressure SF_6 Circuit Breakers • 0.5% (by weight) annual leakage rate • 10% (by weight) leak detection system
Maintenance Vehicle Traffic Generating Fugitive Road Dust	• Maintenance vehicles generating fugitive road dust when traveling on paved and unpaved roadways in the solar field with the Project • Project Fugitive Dust Control Plan

Electricity will be generated by the combustion turbine generators when the combustion of natural gas turns the turbine blades. The spinning blades will drive an electric generator with the potential to generate up to 154 megawatts (MW) of electricity from each turbine.

The facility will be operated in combined-cycle mode because each turbine will connect to a dedicated heat recovery steam generator (HRSG), where hot combustion exhaust gas will flow through a heat exchanger to generate steam. The facility will be equipped with duct burners firing natural gas to increase steam output from the HRSG during periods of peak demand.

The hybrid plant design will include a 251-acre solar field that will consist of parabolic solar-thermal collectors and associated heat transfer equipment arranged in rows. The heat transfer fluid will be circulated to a boiler to supply steam directly to the HRSGs to increase electrical generation from the steam turbine. The fluid will then be recirculated to the solar arrays. An auxiliary heater will be used to ensure that the heat transfer fluid does not freeze and stays above 54 degrees F whenever the solar steam unit is off-line .

The Project will require periodic vehicle travel over the unpaved portions of the solar field to perform routine maintenance including mirror washing, maintenance inspections and repairs of the piping network, herbicide application and dust suppressant application. Fugitive dust emissions are expected from maintenance vehicle traffic on the unpaved areas in the solar fields.

The steam generated from each of the HRSGs will drive a 267 MW steam turbine. On sunny days, the solar array is capable of providing 50 MW of the total electrical generation from the steam turbine. Net power plant output, after subtracting electricity used on-site, will be 563 MW.

Exhaust gas exiting the steam turbine will enter a condenser. Cooling water circulating through the condenser will condense the steam into water, which will be circulated back to each HRSG. The condenser cooling water will then flow through a mechanical draft wet cooling tower, where the remaining heat will be dissipated to the atmosphere, and small quantities of dissolved solids will become airborne as particulate matter.

The diagram on the following page shows a simplified diagram of the proposed Palmdale Hybrid Power Project.

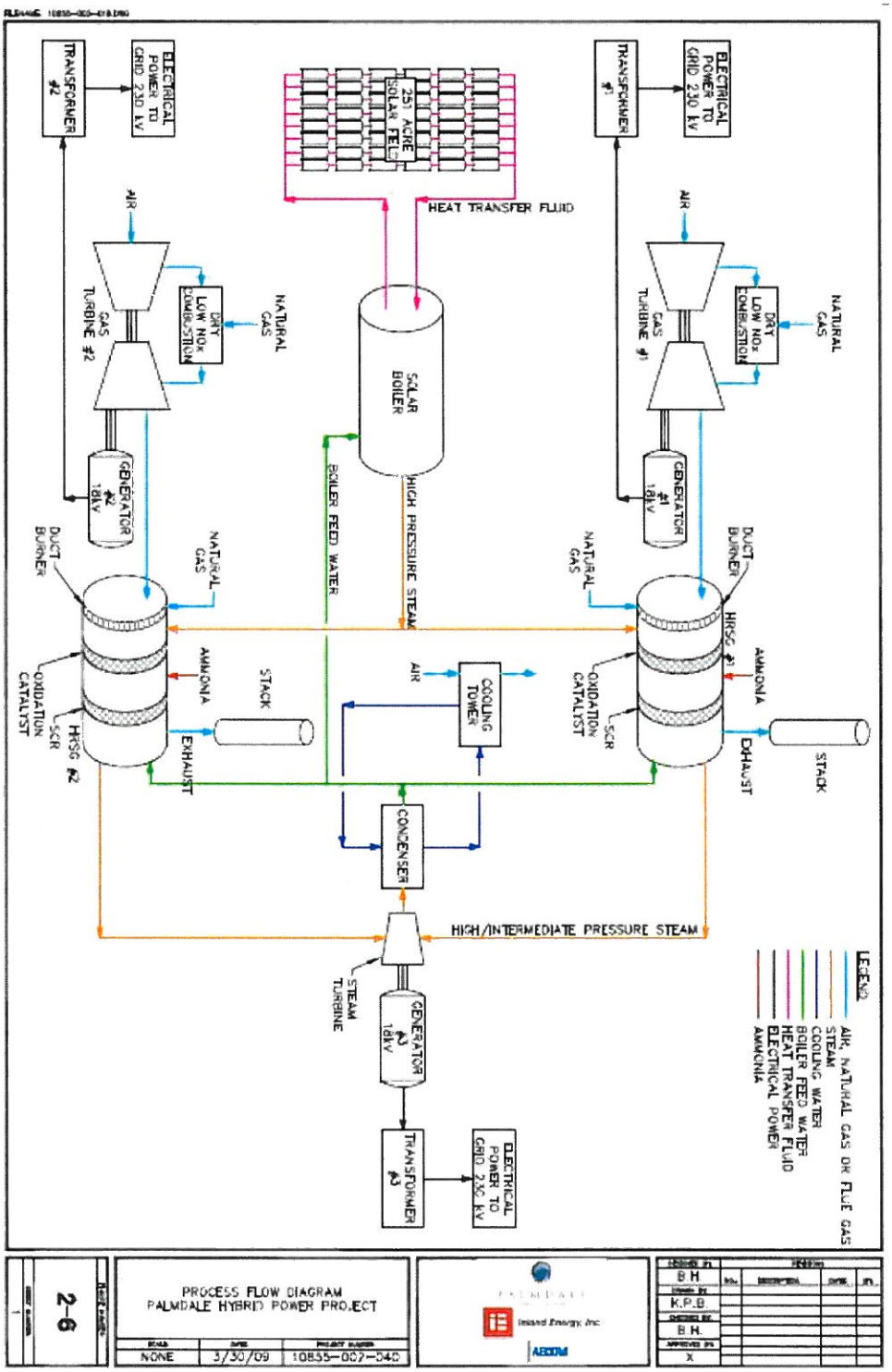
ELECTRICAL POWER TO GRID 230 kV
TRANSFORMER #1
251 ACRE SOLAR FIELD
HEAT TRANSFER FLUID
ELECTRICAL POWER TO GRID 230 kV
TRANSFORMER #2
AIR
GAS TURBINE #1
DRY LOW NOx COMBUSTION
NATURAL GAS
SOLAR BOILER
GAS TURBINE #2
DRY LOW NOx COMBUSTION
NATURAL GAS
GENERATOR #1 18kV
GENERATOR #2 18kV
BOILER FEED WATER
HIGH PRESSURE STEAM
DUCT BURNER
NATURAL GAS
HRSG #1
AMMONIA
OXIDATION CATALYST
SCR
EXHAUST
STACK
COOLING TOWER
CONDENSER
HIGH/INTERMEDIATE PRESSURE STEAM
STEAM TURBINE
GENERATOR #3 18kV
TRANSFORMER #3
ELECTRICAL POWER TO GRID 230 kV
LEGEND
AIR, NATURAL GAS OR FLUE GAS
STEAM
COOLING WATER
BOILER FEED WATER
HEAT TRANSFER FLUID
ELECTRICAL POWER
AMMONIA
PROCESS FLOW DIAGRAM
PALMDALE HYBRID POWER PROJECT
NONE
3/30/09
10855-007-040
2-6
B.H.
K.P.B.
B.H.
X
Inland Energy, Inc.
AECOM

Air Pollution Control

The PHPP will use Selective Catalytic Reduction (SCR) to reduce NO_X emissions from the combustion turbine generators. The SCR will use aqueous ammonia as the reagent, where the catalyst facilitates the reaction of the ammonia with NO_X to create atmospheric nitrogen (N_2) and water. The PHPP will use an oxidation catalyst to reduce emissions of CO and volatile organic compounds (VOCs). Although CO is regulated in this proposed PSD permit, VOCs are regulated by the New Source Review (NSR) permit issued by the District, as explained in Section 6 below. Pipeline quality natural gas fuel and good combustion practices will be used to minimize particulate emissions. Thermal efficiency will be used to minimize GHG emissions.

Additional equipment includes a natural gas-fired auxiliary boiler equipped with an ultra low-NO_X burner, a natural gas-fired auxiliary heater equipped with an ultra low-NO_X burner, a diesel-fired emergency generator and a diesel-fired emergency firewater pump engine both fired with ultra-low sulfur diesel fuel and compliant with federal NSPS requirements, and SF_6 circuit breakers with leak detection systems.

Power Plant Startup

In a typical combined-cycle gas turbine power plant, components of the steam cycle cannot withstand rapid temperature changes, limiting how fast the steam turbine may be started. The "rapid start" design of the PHPP is expected to reduce the time required for the steam cycle to start up. This is important to air quality for two reasons. First, the exhaust gas temperature when the steam cycle is not operating is higher than the design temperature window for the SCR and oxidation catalysts. Second, the plant will generate more electricity for the amount of fuel burned when the hot gas turbine exhaust is used to power the steam generator in combined cycle.

The auxiliary boiler is primarily designed to shorten the duration of startups as part of GE's RSP technology, thus minimizing emissions during CTG startup.

5. Emissions from the Proposed Project

This section describes the pollutants that are covered by the PSD program within the Antelope Valley Air Quality Management District (District), which is the area in which the Project is proposed to be located.

The Clean Air Act's New Source Review (NSR) provisions include two preconstruction permitting programs. First, the PSD program is intended to protect air quality in "attainment areas,"[1] which are areas that meet the National Ambient Air Quality Standards (NAAQS). EPA is responsible for issuing PSD permits for major new stationary sources emitting pollutants that are in attainment with (or unclassifiable for) the NAAQS, in

[1] PSD also applies to pollutants where the status of the area is uncertain (unclassifiable) for NAAQS.

general, and within the District.

Second, the nonattainment NSR program applies in areas where pollutant concentrations exceed the NAAQS ("nonattainment areas"). The District implements the nonattainment NSR program for facilities within its boundaries emitting nonattainment pollutants and their precursors (e.g., volatile organic compounds and nitrogen oxides are precursors to ambient ozone). Therefore, pollutants that are in nonattainment with the NAAQS within the District are regulated under a separate nonattainment NSR permit issued by the District.

Table 5-1 below describes the regulated pollutants that will be emitted by the Project and their attainment status within the District.

Table 5-1: National Ambient Air Quality Standard Attainment Status for Antelope Valley Air Quality Management District

Pollutant	Attainment Status	Permit Program
Nitrogen Dioxide (NO_2)	Attainment/Unclassifiable	PSD
Sulfur Dioxide (SO_2)	Attainment/Unclassifiable	PSD
Carbon Monoxide (CO)	Attainment	PSD
Particulate Matter (PM)	n/a[2]	PSD
Particulate matter under 10 micrometers diameter (PM_{10})	Unclassifiable	PSD
Particulate Matter under 2.5 micrometers diameter ($PM_{2.5}$)	Attainment/Unclassifiable	PSD
Ozone	Nonattainment[3]	NA-NSR
Lead (Pb)	Attainment[4]	PSD
Sulfuric Acid Mist (H_2SO_4)	n/a[2]	PSD
Hydrogen Sulfide (H_2S)	n/a[2]	PSD
Total Reduced Sulfur (TRS)	n/a[2]	PSD
Fluorides	n/a[2]	PSD
Greenhouse Gases (GHG)	n/a[2]	PSD

The PSD program (40 CFR § 52.21) applies to "major" new sources of pollutants for which an area has been designated attainment or is unclassifiable. A fossil fuel-fired steam

[2] There are no national ambient air quality standards (NAAQS) for PM, H_2SO_4, H_2S, TRS, fluorides, or GHGs. However, in addition to other pollutants for which no NAAQS have been set, these pollutants are listed as regulated pollutants with a defined applicability threshold under the PSD regulations (40 CFR § 52.21).

[3] Because NO_x is also a precursor to ozone in this area, it will also be regulated by the separate District ozone non-attainment New Source Review permit in addition to this PSD permit.

[4] Area has not yet been designated for lead and is therefore treated as an attainment area.

electric plant with a heat input capacity of 250 MMBtu/hr or greater, such as the PHPP, that emits or has the potential to emit (PTE) 100 tons per year (tpy) or more of any pollutant regulated under the Clean Air Act[5], is defined as a "major source."

6. Applicability of the Prevention of Significant Deterioration Regulations

This section describes the PSD applicability thresholds, and our conclusion that NO_2, CO, PM, PM_{10}, $PM_{2.5}$, and GHG will be regulated by EPA's proposed PSD permit.

The estimated emissions in Table 6-1 show that the PHPP will be a major source for NO_x, CO, PM, PM_{10}, $PM_{2.5}$ and GHG. The annual emission data in Table 3 (based on allowable operation up to 8,760 hours per year) are based on the applicant's maximum expected emissions, including emissions from startup and shutdown cycles. The applicant assumes that all combustion-related emissions of PM_{10} are of diameter less than 2.5 microns (i.e., $PM_{2.5}$), which is a conservative estimate, as some particulate emissions may fall in the size fraction between 2.5 and 10 micrometers.

Once a source is considered major for a PSD pollutant, PSD also applies to any other regulated pollutant that is emitted in a significant amount. The data in Table 3 show that emissions of sulfur dioxide (SO_2) will be less than the major source threshold and less than the significant emission rate. Therefore, PSD does not apply for SO_2. Estimated emissions of the PSD-regulated pollutants from each emission unit are listed in Table 6-1.

[5] Other types of "source categories" are subject to either the same 100 tpy threshold, or else a 250 tpy threshold.

Table 6-1: Estimated Emissions and PSD Applicability

Pollutant	Estimated Annual Emissions (tons/year)	Major Source Threshold (tons/year)	Significant Emission Rate (tons/year)	Does PSD apply?
CO	250.2	100	100	Yes
NO_2	114.9	100	40	Yes
PM	79.1	100	25	Yes
PM_{10}	62.5	100	15	Yes
$PM_{2.5}$	56.0	100	15	Yes
SO_2	8.9	100	40	No
Pb	0	0.6	0.6	No
H_2SO_4	3.4	7	7	No
H_2S (incl. TRS)	0	10	10	No
Fluorides	0	3	3	No
GHG (incl. CO_2e)	1,913,000	100,000	75,000	Yes

Table 6-2: Estimated Emissions of PSD-Regulated Pollutants by Emission Unit

	CO	NO_X	PM	PM_{10}	$PM_{2.5}$	GHG (a)	CO_2e (b)
Total Facility	**250.2 tpy**	**114.9 tpy**	**79.1 tpy**	**62.5 tpy**	**56.0**	**1,913,376**	**1,913,000**
CTG+HRSG (2)	248.0	113.7	47.8	47.8	47.8	1,908,074	1,908,000
Auxiliary Heater	0.74	0.22	0.15	0.15	0.15	2,340	2,000
Auxiliary Boiler	1.01	0.30	0.20	0.20	0.20	2,920	3,000
Emergency Diesel Engine	0.39	0.67	0.02	0.02	0.02	27.6	0
Emergency Diesel Firewater Pump	0.03	0.03	0.002	0.002	0.002	4.41	0
Cooling Tower	n/a	n/a	7.13	7.13	7.13	n/a	n/a
Circuit Breakers	n/a	n/a	n/a	n/a	n/a	9.56	0
Maintenance Vehicles (c)	n/a	n/a	23.80	7.16	0.72	n/a	n/a

Notes:

(a) Represents all GHG emissions on a mass basis.

(b) Represents the carbon dioxide equivalent (CO_2e) of all GHG emissions, rounded to the nearest 1,000 tons.

(c) This category represents fugitive road dust emissions (e.g., particulate matter emissions) that are expected from maintenance vehicle traffic on the unpaved areas in the solar fields.

7. Best Available Control Technology

This section describes EPA's Best Available Control Technology (BACT) analysis for the control of NO_x, CO, PM, PM_{10}, $PM_{2.5}$ and GHG emissions from this facility. Section 169(3) of the Clean Air Act defines BACT as follows:

> "The term 'best available control technology' means an emission limitation based on the maximum degree of reduction of each pollutant subject to regulation under the Clean Air Act emitted from or which results from any major emitting facility, which the permitting authority, on a case-by-case basis, taking into account energy, environmental, and economic impacts and other costs, determines is achievable through application of production processes and available methods, systems, and techniques, including fuel cleaning or treatment or innovative fuel combustion techniques for control of each such pollutant. In no event shall application of 'best available control technology' result in emissions of any pollutants which will exceed the emissions allowed by any applicable standard established pursuant to section 111 [New Source Performance Standards or NSPS] or 112 [or NESHAPS] of the Clean Air Act."

See also 40 CFR 52.21(b)(12). In accordance with 40 CFR 52.21(j), a new major stationary source is required to apply BACT for each regulated NSR pollutant that it would have the potential to emit (PTE) in significant amounts.

EPA outlines the process it generally uses to do this case-by-case analysis (referred to as a "top-down" BACT analysis) in a June 13, 1989 memorandum. The top-down BACT analysis is a well-established procedure that EPA's Environmental Appeals Board (EAB) has consistently followed in adjudicating PSD permit appeals. See, e.g., In re Knauf, 8 E.A.D. 121, 129-31 (EAB 1999); In re Maui Electric, 8 E.A.D. 1, 5-6 (EAB 1998).

In brief, under the top-down process, all available control technologies are ranked in descending order of control effectiveness. The PSD applicant first examines the most stringent technology. That technology is established as BACT unless it is demonstrated that technical considerations, or energy, environmental, or economic impacts justify a conclusion that the most stringent technology is not achievable for the case at hand. If the most stringent technology is eliminated, then the next most stringent option is evaluated until BACT is determined. The top-down BACT analysis is a case-by-case exercise for the particular source under evaluation. In summary, the five steps involved in a top-down BACT evaluation are:

1. Identify all available control options with practical potential for application to the specific emission unit for the regulated pollutant under evaluation;

2. Eliminate technically infeasible technology options;

3. Rank remaining control technologies by control effectiveness;

4. Evaluate the most effective control alternative and document results, considering energy, environmental, and economic impacts as appropriate; if top option is not selected as BACT, evaluate next most effective control option; and

5. Select BACT, which will be the most stringent technology not rejected based on technical, energy, environmental, and economic considerations.

The proposed Project is subject to BACT for NO_x, CO, PM, PM_{10}, $PM_{2.5}$, and GHG emissions. A BACT analysis was conducted for each of the following emission units: the two natural gas combustion turbines, the 40 MMBtu/hr auxiliary process heater, the 110 MMBtu/hr auxiliary boiler, the two diesel-fired internal combustion engines, the fugitive road dust emissions, the cooling tower and the circuit breakers. Tables 7-1 and 7-2 provide a summary of the BACT determinations for NO_X, CO, PM, PM_{10}, $PM_{2.5}$, and GHG from the emission units listed above.

Table 7-1: Summary of NO_X, CO, PM, PM_{10}, and $PM_{2.5}$ BACT Limits and Requirements for Testing and Monitoring[6]

	NO_X	CO	PM, PM_{10}, and $PM_{2.5}$	Restrictions on Usage
2 Combustion Turbines (each, no duct burning)	• 11.55 lb/hr • 1-hr average • 2.0 ppmvd, 15% O_2 • CEMS • Quarterly and Annual RATA for CEMs	• 5.74 lb/hr[7] • 1-hr average • 1.5 ppmvd, 15% O_2[8] • CEMS • Quarterly and Annual RATA for CEMs	• 4.7 lb/hr • 3-hr average • 0.0027 lb/MMBtu • PUC natural gas (Sulfur <0.20 gr/100 dscf on 12-month average and not exceed 1.0 gr/dscf at anytime) • Annual Performance Testing	n/a
2 Combustion Turbines (each, with duct burning)	• 14.6 lb/hr • 1-hr average • 2.0 ppmvd, 15% O_2	• 8.90 lb/hr • 1-hr average • 2.0 ppmvd,15% O_2	• 8.0 lb/hr • 3-hr average • 0.0035 lb/MMBtu • PUC natural gas (Sulfur <0.20 gr/100 dscf on 12-month average and not exceed 1.0 gr/dscf at anytime) • Annual Performance Testing	• Total duct burning (D3 & D4) $\leq$ 2,000 hrs/yr
2 Combustion Turbines (each, startup and shutdown)	• Cold Start - 52.4 lb/hr, 96 lb/event • Warm/Hot – 30 lb/hr, 40 lb/event • Shutdown – 114 lb/hr, 57 lb/event • 1-hr average	• Cold Start - 224 lb/hr, 410 lb/event • Warm/Hot – 247 lb/hr, 329 lb/event • Shutdown – 674 lb/hr, 337 lb/event • 1-hr average	n/a	• Cold Start –110 minutes • Warm/Hot – 80 minutes • Shutdown – 674 30 minutes
Heater 40 MMBtu/hr (HHV) **Boiler** 35 MMBtu/hr (HHV)	• 9.0 ppm, 3% O_2 • 3-hr average • Initial Performance Testing and at least every 5 years	• 50.0 ppm, 3% O_2 • 3-hr average • Initial Performance Testing and at least every 5 years	• 0.3 lb/hr for Heater • 0.8 lb/hr for Boiler • 3-hr average • PUC natural gas (Sulfur <0.20 gr/100 dscf on 12-month average and not exceed 1.0 gr/dscf at anytime)	• 1,000 hr/yr • Non-resettable elapsed time meter • 500 hr/yr • Non-resettable elapsed time meter

[6] PHPP must keep all records of all testing, fuel use, and fuel testing requirements for a period of five (5) years and must report excess emissions to EPA semi-annually, except when: more frequent reporting is specifically required by an applicable subpart; or the Administrator, on a case-by-case basis, determines that more frequent reporting is necessary to accurately assess the compliance status of the source. .

[7] During the initial 3-year demonstration period, the limit will be 7.65 lb/hr.

[8] During the initial 3-year demonstration period, the limit will be 2.0 ppmvd, 15% O_2

	NO_X	CO	PM, PM_{10}, and $PM_{2.5}$	Restrictions on Usage
Emergency Generator 2000 KW (2,683 hp)	• 6.4 g/KW-hr, (4.8 g/hp-hr)[9] • 3-hr average • Initial Performance Testing	• 3.5 g/KW-hr, (2.6 g/hp-hr) • 3-hr average • Initial Performance Testing	• 0.20 g/KW-hr, (0.15 g/hp-hr) • 3-hr average • Exclusive use of ultra low sulfur fuel, not to exceed 15 ppmvd sulfur • Fuel Supplier Certification • Initial Performance Testing	• 50 hr/year • Non-resettable elapsed time meter
Firewater Pump Engine 135 KW (182 hp)	• 4.0 g/KW-hr, (3.0 g/hp-hr)[10] • 3-hr test average • Initial Performance Testing			• 50 hr/year • As required for fire testing • Non-resettable elapsed time meter
Cooling tower 130,000 gpm	n/a	n/a	• 1.6 lb/hr (total PM) • $\leq$ 0.0005% drift eliminators • $\leq$ 5000 ppm total dissolved solids • Weekly water quality testing	n/a
Circuit Breakers	na/	n/a	n/a	n/a
Maintenance Vehicle	n/a	n/a	• Fugitive Dust Control Plan	n/a

[9] Emission standards for NO_x in the New Source Performance Standard for stationary compression ignition internal combustion engines (40 CFR Part 60 Subpart IIII) and the California Tier Emission Standards are based on the sum of NO_x and non-methane hydrocarbons (NMHC). For the NO_x emission limits, the applicant assumes NMHC + NO_x emissions from the engine are 95% NO_X.

[10] *Ibid.*

Table 7-2: Summary of GHG BACT Limits and Requirements for Testing and Monitoring

	GHG	Testing and Monitoring	Restrictions on Usage
2 Combustion Turbines (each, no duct burning)	• 774 lb CO_2/MWh source-wide net output • 117 lb CO_2/MMBtu heat input, each at ISO standard day conditions • 30-day rolling average	• CEMS	n/a
2 Combustion Turbines (each, with duct burning)			• Total duct burning (D3 & D4) $\leq$ 2,000 hrs/yr
2 Combustion Turbines (each, startup and shutdown)			• Cold Start – 110 minutes • Warm/Hot – 80 minutes
Heater 40 MMBtu/hr (HHV)	• Annual tune-ups	• Non-resettable elapsed time meter	• 1,000 hr/yr
Boiler 35 MMBtu/hr (HHV)		• Non-resettable elapsed time meter	• 500 hr/yr
Circuit Breakers	• 9.56 tpy CO_2e • 0.5% maximum annual leakage rate	• 10% leak detection system • Monthly pounds of dielectric fluid added	n/a

7.1 BACT for Natural Gas Combustion Turbine Generators

The PHPP will have two combined-cycle, natural gas-fired combustion turbines (CTs). Each CT has a maximum heat input capacity of 1,736 MMBtu/hr (at ISO conditions) and will have a dedicated heat recovery steam generator (HRSG) with a 550 MMBtu/hr duct burner. Each duct burner will be limited to 2,000 hours of operation per year. The CTs are subject to BACT for NO_X, CO, PM, PM_{10}, $PM_{2.5}$ and GHGs. A top-down BACT analysis for each pollutant has been performed and is summarized below.

7.1.1 Nitrogen Oxide Emissions

Step 1 - Identify All Control Technologies

The following inherently lower-emitting control options for NO_X emissions include:

- Low NO_X burner design (e.g., dry low NO_X (DLN) combustors)

- Water or steam injection
- Inlet air coolers

The available add-on NO_X control technologies include:

- Selective Catalytic Reduction (SCR) system
- EMx™ system (formerly SCONOx)
- Selective non-catalytic reduction (SNCR)

Step 2 – Eliminate Technically Infeasible Options
All of the available control options identified in Step 1 are technically feasible.

Step 3 – Rank Control Technologies
A summary of recent BACT limits for similar combined-cycle, natural gas-fired CTs is provided in Table 7-3. There is one facility that was permitted with a BACT limit less than the limit proposed by the applicant. The IDC Bellingham facility in Massachusetts was permitted in 2000 with a limit of 1.5 ppm. However, this project was cancelled, so this limit has never been demonstrated as achievable. All recently issued permits indicate that a limit of 2.0 ppm based on a 1-hr average represents the highest level of NO_X control. The available control technologies are ranked according to control effectiveness in Table 7-4.

SCR and EMx™ for NO_X Emissions
Selective catalytic reduction (SCR) is a well-demonstrated technology for NO_X control and has specifically achieved NO_X emissions of 2.0 ppm on a 1-hr average on large CTs (greater than 100 MW).

EMx™ technology (formerly SCONOx) is a relatively newer technology that has yet to be demonstrated in practice on CTs larger than 50 MW. The manufacturer has stated that it is a scalable technology and that NO_X guarantees of <1.5 ppm are available.[11] As a result, EMx™ is considered technically feasible for this facility. However, it is unclear what NO_X emission levels can actually be achieved by the technology.

We found only one BACT analysis that determined that EMx™/SCONOx was BACT for a large CT. However, the accompanying permit for the facility, Elk Hills Power in California, allowed the use of SCR or SCONOx (the former name of EMx™) to meet a permit limit of 2.5 ppm, and the actual technology that was installed in that case was SCR.

We also note that the Redding Power Plant in California, a 43 MW gas-fired CT, was permitted with a 2.0 ppm demonstration limit using SCONOx. In a letter dated June 23, 2005 from the Shasta County Air Quality Management District (Shasta County AQMD) to the Redding Electric Utility, however, it was determined that the unit could not meet the demonstration limit and, as a result, the limit was revised to 2.5 ppm. Based on these two examples, it appears EMx™ has been demonstrated to achieve only 2.5 ppm and we are therefore evaluating it at this limit.

[11] Information available at http://emerachemnew.ciplex.us/emx-product.html. See EMx White Paper 2008.

Table 7-4: NO_X Control Technologies Ranked by Control Effectiveness

NO_X Control Technology	Emission Rate (ppmvd @ 15% O_2, 1-hr average)
SCR with dry low NO_X combustors and inlet air coolers	2.0
EMx™ with dry low NO_X combustors and inlet air coolers	2.5
SNCR with dry low NO_X combustors and inlet air coolers	~4.5[12]
Dry low NO_X combustors and inlet air coolers	9
Water or steam injection	>9

Step 4 – Economic, Energy and Environmental Impacts

The applicant has proposed SCR, the top-ranked technology, as BACT. We have determined that it is appropriate to consider the collateral environmental impacts associated with SCR. The SCR system requires onsite ammonia storage and will result in relatively small amounts of ammonia slip from the CTs' exhaust gases. Ammonia has the potential to be a toxic substance with harmful side effects, if exposed through inhalation, ingestion, skin contact, or eye contact.[13] Ammonia has not been identified as a carcinogen. It is noted that the applicant will use aqueous ammonia, which is considered the safer storage method. Additionally, we note that the California Energy Commission's Presiding Member's Proposed Decision proposes to include Conditions of Certification to ensure the safe receipt and storage of aqueous ammonia at the PHPP.[14]

Ammonia slip emissions for the proposed source are limited to 5 ppm by the nonattainment New Source Review (NSR) permit issued by the District. The District conducted a Health Risk Assessment (HRA) that included ammonia slip emissions. The results of the assessment showed that the maximum non-cancer chronic and acute hazard indices were both less than the significance level of 1.0 (0.0008 and 0.028, respectively).[15]

Considering the above factors, the possible risks associated with onsite storage and use of ammonia do not appear to outweigh the benefits associated with significant NO_X reductions.

Step 5 – Select BACT

Based on a review of the available control technologies for NO_X emissions from natural gas-fired combustion turbines, we have concluded that BACT for CTs is 2.0 ppm at 15% O_2 based on a 1-hr average. Additionally, we are adding a mass emission limit of 11.55 lb/hr without duct firing and 14.6 lb/hr with duct firing based on a 1-hr average.

---

[12] This is an approximate value that was estimated considering that the control effectiveness of SNCR has been demonstrated to be between 40 and 60 percent.

[13] Information is available from the Agency for Toxics Substances and Disease Registry at http://www.atsdr.cdc.gov/phs/phs.asp?id=9&tid=2.

[14] This information is available at http://www.energy.ca.gov/2011publications/CEC-800-2011-005/CEC-800-2011-005-PMPD.pdf. See conditions HAZ-1 through HAZ-6.

[15] See Final Determination of Compliance for Palmdale Hybrid Power Project issued by the District on May 13, 2010, Section 8.

Table 7-3: Summary of Recent NO_X BACT Limits for Similar Combined-Cycle, Natural gas-fired CTs

Facility	Location	NO_X Limit	Averaging Period	Control	Permit Issuance	Source
Avenal Energy Project[16]	California	2.0 ppm	1-hr	SCR	May 2011	PSD Permit
Warren County Power Station	Virginia	2.0 ppm	1-hr	SCR/DLN	December 2010	PSD Permit
Carty Power Plant	Oregon	2.0 ppm	3-hr rolling	SCR	Draft December 2010	RBLC # OR-0048
Langley Gulch Power Plant	Idaho	2.0 ppm	3-hr rolling	SCR/DLN	Draft December 2010	RBLC # ID-0018
Live Oaks Power Plant	Georgia	2.5 ppm	3-hr	SCR/DLN	April 2010	RBLC # GA-0138
Colousa Generating Station	California	2.0 ppm	1-hr	SCR	March 2010	PSD Permit
Victorville II Hybrid Power Project	California	2.0 ppm	1-hr	SCR	February 2010	PSD Permit
Madison Bell Energy Center	Texas	2.0 ppm	24-hr rolling	SCR	August 2009	RBLC # TX-0548
Chouteau Power Plant	Oklahoma	2.0 ppm	1-hr	SCR/DLN	January 2009	RBLC # OK-0129
Kleen Energy Systems	Connecticut	2.0 ppm	1-hr	SCR/LNB	February 2008	RBLC # CT-0151
PSO Southwestern Power Plant	Oklahoma	9.0 ppm	--	DLN	February 2007	RBLC # OK-0117
FPL West County Energy Center Unit 3	Florida	2.0 ppm	24-hr	SCR/DLN	July 2008	RBLC # FL-0303
FMPA Cane Island Power Park	Florida	2.0 ppm	24-hr	SCR	September 2008	RBLC # FL-0304
Blythe Energy LLC (Blythe II)	California	2.0 ppm	3-hr	SCR/DLN	April 2007	PSD Permit
Elk Hills Power	California	2.5 ppm	1-hr	SCR/DLN or SCONOX	January 2006	PSD Permit Modification
Rocky Mountain Energy Center	Colorado	3.0 ppm	1-hr	SCR/LNB	May 2006	RBLC # CO-0056
San Joaquin Valley Energy Center	California	2.0 ppm	1-hr	SCR/DLN	August 2006	PSD permit
Walnut Energy Center	California	2.0 ppm	1-hr	SCR	2004	California Energy Commission
Donald Von Raesfeld Power Plant	California	2.0 ppm	1-hr	SCR	2003	California Energy Commission
IDC Bellingham	Massachusetts	1.5 ppm	1-hr	SCR	2000	SCAQMD - project cancelled

[16] We note that this permit is currently the subject of an administrative appeal to EPA's EAB; however, the appeal does not pertain specifically to the BACT analysis for NO_x or the permit's emission limits for NO_x.

7.1.2 Carbon Monoxide Emissions

Step 1 – Identify All Control Technologies
The inherently lower-emitting control options for CO emissions include:

- Good combustion practices

The available add-on CO control technologies include:

- Oxidation catalyst
- EMx™

Step 2 – Eliminate Technically Infeasible
All of the available control options identified in Step 1 are technically feasible.

Step 3 – Rank Remaining Control Technologies
A summary of recent BACT limits for similar combined-cycle, natural-gas fired CTs is provided in Table 7-5. The applicant proposed using oxidation catalyst with a limit of 2.0 ppm (with and without duct burning) based on a 1-hr average. Currently, the lowest permitted limit for oxidation catalyst is the Kleen Energy facility in Connecticut, which has a limit of 0.9 ppm (1.8 ppm with duct firing) based on a 1-hr average. The Kleen Energy facility has recently begun commercial operation, but results from compliance demonstration testing are not available at this time.[17] The next most stringent permitted limit is the Avenal Energy Project in California, which has a limit of 1.5 ppm following a demonstration period[18] (2.0 ppm with duct burning) and also uses oxidation catalyst. The Avenal Energy Project has not begun construction at this time. Based on this information, oxidation catalyst is being evaluated at the most stringent control option.

Oxidation Catalyst and EMx™
Oxidation catalyst is a well-demonstrated technology for large CTs. As discussed in the NO_X BACT analysis, it is clear that EMx™ is an available and technically feasible technology. However, it is unclear what level of control would be achieved by the technology on a long-term basis with a short (1-hr) averaging period. The manufacturer claims that emission rates below 1 ppm are achievable, but there is a lack of information that demonstrates this on large CTs. We are not aware of any BACT determinations that have required EMx™ for CO emissions. Based on the lack of information for similar units, EMx™ is conservatively being compared as equivalent to oxidation catalyst.

---

[17] See August 4, 2011 email from Louis Corsino to Lisa Beckham – "Kleen Energy – Middletown, CT".
[18] This limit becomes effective after a 3-year demonstration period, during which the limit is 2.0 ppm. As noted above, this permit is currently the subject of an administrative appeal to EPA's EAB; however, the appeal does not pertain specifically to the BACT analysis for CO or the permit's emission limits for CO.

The available control technologies are ranked according to control effectiveness in Table 7-6.

Table 7-6: CO Control Technologies Ranked by Control Effectiveness

CO Control Technology	Emission Rate (ppmvd @ 15% O_2, 1-hr average, without duct firing)	Emission Rate (ppmvd @ 15% O2, 1-hr average, with duct firing)
Oxidation catalyst and good combustion practices	0.9-2.0 ppm	2.0-2.4 ppm
EMx™ and good combustion practices	0.9–2.0 ppm	2.0-2.4 ppm
Good combustion practices	8.0 ppm	8.0 ppm

Step 4 – Economic, Energy and Environmental Impacts

Although EMx™ is being considered equivalent to oxidation catalyst for controlling CO emissions, it was determined to be inferior to SCR for controlling NO_X emissions. Because EMx™ would not ensure BACT is achieved for NO_X, it is being eliminated in this step due to environmental impacts. Overall, better and more reliable pollution control for NO_X and CO will be achieved for the Project with SCR and oxidation catalyst than with EMx™. We are not aware of any significant or unusual adverse environmental impacts associated with good combustion practices and an oxidation catalyst.

Step 5 – Select BACT

Based on the review of the available control technologies, we have concluded that BACT for CO is good combustion practices and an oxidation catalyst with a limit of 1.5 ppm at 15% O_2 based on a 1-hr average without duct firing, and 2.0 ppm with duct firing. Additionally, we are adding a mass emission limit of 5.74 lb/hr without duct firing and 8.90 lb/hr with duct firing based on a 1-hr average. However, given the lack of long-term compliance data for the lower limits that would apply without duct firing, we feel it is appropriate to include permit provisions establishing a three-year demonstration period for those limits, during which time the limit will be 2.0 ppm at 15% O_2 and 7.65 lb/hr based on a 1-hr average without duct firing.

Demonstration period permit provisions will require that, prior to construction, the permittee submit design specifications as proof that the gas turbines were designed to achieve 1.5 ppm. The permittee must also submit a plan that sets forth the measures that will be taken to maintain the system and optimize its performance. The permittee must operate the gas turbines according to the design specifications and within the design parameters, and consistent with the maintenance and performance optimization plan. Following the first three years of commercial operation, the limits of 1.5 ppm (1-hour average) without duct firing will take effect unless the emissions and operating data collected by the applicant indicates that these limits are not feasible, and the applicant submits an application to EPA no later than the end of the 3-year period requesting a revision to the limit. If such a revision is requested but EPA determines that a revision is not warranted, the lower emission limit will become applicable.

Table 7-5: Summary of Recent CO BACT Limits for Similar Combined-Cycle, Natural gas-fired CTs

Facility	Location	CO Limit (CO Limit with duct firing)	Averaging Period	Control	Permit Issuance	Source
Avenal Energy Project	California	1.5 ppm[19] (2.0 ppm)	1-hr	Oxidation catalyst	June 2011	PSD Permit
Warren County Power Station	Virginia	1.5 ppm (2.4 ppm with duct burning)	1-hr	Oxidation catalyst/GCP	December 2010	PSD Permit
Langley Gulch Power Plant	Idaho	2.0 ppm	3-hr rolling	Oxidation catalyst/GCP	Draft December 2010	RBLC # ID-0018
Live Oaks Power Plant	Georgia	2.0 ppm	3-hr	Oxidation catalyst/GCP	April 2010	RBLC # GA-0138
Colousa Generating Station	California	3.0 ppm	3-hr	Oxidation catalyst	March 2010	PSD Permit
Victorville II Hybrid Power Project	California	2.0 ppm (3.0 ppm)	1-hr	Oxidation catalyst	February 2010	PSD Permit
Madison Bell Energy Center	Texas	17.5 ppm	1-hr rolling	GCP	August 2009	RBLC # TX-0548
Chouteau Power Plant	Oklahoma	8.0 ppm	1-hr	GCP	January 2009	RBLC # OK-0129
Lamar Power Partners II	Texas	15 ppm	24-hr rolling	GCP	June 2009	RBLC # TX-0547
Patillo Branch Power Plant	Texas	2.0 ppm	3-hr rolling	Oxidation catalyst	June 2009	RBLC # TX-0546
Cane Island Power Park	Florida	8 ppm	24-hr	GCP	September 2008	RBLC # FL-0304
Elk Hills Power	California	4.0 ppm	1-hr	Oxidation catalyst	January 2006	PSD Permit Modification
Kleen Energy Systems	Connecticut	0.9 ppm (1.8 ppm with duct firing)	1-hr	Oxidation catalyst	February 2008	RBLC # CT-0151

[19] This limit becomes effective after a 3-year demonstration period. During the demonstration period, the limit is 2.0 ppm.

7.1.3 PM, PM_{10} and $PM_{2.5}$ Emissions

Because the applicant has assumed that all particulate emissions from the turbines are $PM_{2.5}$, the BACT analyses for PM, PM_{10} and $PM_{2.5}$ have been combined. Additionally, the analysis evaluates total particulate emissions – condensable and filterable.

Step 1 – Identify All Control Technologies
The following inherently lower-emitting control options for PM, PM_{10}, and $PM_{2.5}$ emissions include:

- Low particulate fuels, low sulfur fuels, and/or pipeline natural gas (also referred to as "clean fuel")
- Good combustion practices (including air inlet filter)

The available add-on PM, PM_{10}, $PM_{2.5}$ control technologies include:

- Cyclones (including multiclones)
- Wet scrubber
- Dry electrostatic precipitator (ESP)
- Wet ESP
- Baghouse/fabric filter.

Step 2 – Eliminate Technically Infeasible Control Options
All of the control technologies identified are technically feasible except for cyclones (including multiclones). Although cyclones have been identified as being capable of marginal $PM_{2.5}$ control[20], the low grain loading makes them technically infeasible for this application. EPA's Air Pollution Control Technology Fact Sheet for Cyclones (EPA-452/F-03-005) identifies typical grain loading for cyclones as ranging from 1.0 to 100 gr/scf and being as low as 0.44 gr/scf.[21] In contrast, the grain loading for the CTs' exhaust stream would be about 0.0015 gr/scf based on the applicant's proposed BACT limits. Cyclones are generally used in high dust applications where a majority of the particulate emissions are filterable emissions. In contrast, the majority of emissions from the CTs will be condensable particulate matter.

Step 3 – Rank Remaining Control Technologies

A review of other BACT limits for similar combined-cycle natural gas-fired CTs is provided in Table 7-7. We note that many BACT determinations that were concluded prior to January 1, 2011 included limits only for filterable PM.[22] Because our BACT analysis for the Project must address total PM (filterable plus condensable), we did not further evaluate PM limits addressing

[20] –Information available at http://www.epa.gov/apti/Materials/APTI%20413%20student/413%20Student%20Manual/SM_ch%204.pdf.
[21] Information is available at http://www.epa.gov/ttn/catc/dir1/fcyclon.pdf.
[22] See 40 CFR 52.21(b)(50) – On or after January 1, 2011, such condensable particulate matter shall be accounted for in applicability determinations and in establishing emissions limitations for PM, $PM_{2.5}$, and PM_{10} in PSD permits.

solely filterable PM, which would not be applicable here. The applicant proposed a total PM limit of 12 lb/hr without duct firing and 18 lb/hr with duct firing. In order to compare these emission rates to similar facilities, these limits were converted to lb/MMBtu – 0.0069 lb/MMBtu, and 0.0079 lb/MMBtu, respectively.

The most recently permitted units with total PM limits using lb/MMBtu are Warren County Power Station in Virginia (Warren County) and the Chouteau Power Plant in Oklahoma (Chouteau). Of these two facilities, only the Chouteau unit is operational and demonstrated to be in compliance with its PM limits.[23] The applicant's proposed emission rates appear to be significantly higher on a lb/MMBtu basis when compared to Chouteau (0.0035 lb/MMBtu) and Warren County (0.0027 lb/MMBtu without duct burning and 0.0040 lb/MMBtu with duct burning). The results from the total PM testing at Chouteau showed total PM emissions to be equivalent to 0.0029 lb/MMBtu (with a 99 MMBtu/hr duct burner).[24] Therefore, we believe the uncontrolled emission rates that should be evaluated are 0.0027 lb/MMBtu without duct burning and 0.0035 lb/MMBtu with duct burning.

We were not able to identify any CT using add-on PM controls; however, such controls are considered technically feasible and are therefore being further evaluated. Wet ESP has been evaluated as the highest performing control option because all particulate emissions are expected to be $PM_{2.5}$ and wet ESP is expected to perform better in this range as compared to the other add-on control technologies. The applicant eliminated the wet scrubber as an option due to possible increases in PM emissions associated with the total dissolved solids (TDS) content of the water available at the facility. However, it is not clear this has ever been demonstrated as a problem and therefore we have conservatively included wet scrubber for further consideration in the BACT analysis. We identified a control efficiency of 90% for this option based on the document used by the applicant for the economic analysis - "Controlling Fine Particulate Matter Under the Clean Air Act: A Menu of Options," prepared by the State and Territorial Air Pollution Program Administrators (STAPPA) and Association of Local Air Pollution Control Officials (LAPCO) (hereinafter "*Controlling Fine PM*").[25] The applicant also conservatively assumed 99% $PM_{2.5}$ control for baghouse and dry ESP.

---

[23] See August 3, 2011 email from Lisa Beckham, EPA Region 9, to Shirley Rivera, EPA Region 9 re: "Chouteau Power Plant in Oklahoma".

[24] See August 8, 2011 emails from Lisa Beckham, EPA Region 9, to Shirley Rivera, EPA Region 9 re: "Chouteau Power Plant in Oklahoma".

[25] Information is available at http://www.4cleanair.org/PM25Menu-Final.pdf.

Table 7-7: Summary of Recent PM BACT Limits for Similar Combined-Cycle, Natural gas-fired CTs

Facility	Location	PM Limit (PM Limit w/Duct Firing)	Type of PM - Filterable(F), Total(T)	Averaging Period	Control	Permit Issuance	Source
Avenal Energy Project[26]	California	8.91 lb/hr (11.78 lb/hr)[27]	TPM_{10}	12-month rolling	Natural Gas Fuel	June 2011	PSD Permit
Warren County Power Station	Virginia	8 lb/hr (14 lb/hr)	TPM_{10}, $TPM_{2.5}$	3-hr	---	December 2010	PSD Permit
Warren County Power Station	Virginia	0.0027 lb/MMBtu (0.0040 lb/MMBtu)	TPM_{10}, $TPM_{2.5}$	3-hr	---	December 2010	PSD Permit
Carty Plant	Oregon	2.5 lb/MMscf	FPM_{10}	---	Clean Fuel	Draft December 2010	RBLC # OR-0048
Langley Gulch Power Plant	Idaho	No limit	FPM_{10}	---	GCP	Draft December 2010	RBLC # ID-0018
Colusa Generating Station	California	13.5 lb/hr	TPM, TPM_{10}	12-month rolling	Natural Gas Fuel	March 2010	PSD Permit
Victorville II Hybrid Power Project	California	12.0 lb/hr (18.0 lb/hr)	TPM, TPM2.5	12-month rolling	Natural Gas Fuel	March 2010	PSD Permit
Chouteau Power Plant	Oklahoma	6.59 lb/hr, 0.0035 lb/MMBtu	TPM_{10}	3-hr	Natural Gas Fuel	January 2009	RBLC # OK-0129
Cane Island Power Park	Florida	2 gr S/100 scf	TPM_{10}	---	Fuel Spec	September 2008	RBLC # FL-0304
FPL West County Energy Center Unit 3	Florida	2 gr S/100 scf	PM/PM_{10}/$PM_{2.5}$	---	Fuel Spec	July 2008	RBLC # FL-0303
Plaquemine Cogeneration Facility	Louisiana	33.5 lb/hr, 0.02 lb/MMBtu	FPM_{10}, TPM	---	Clean Fuel	July 2008	RBLC # LA-0136
Aresnal Hill Power Plant	Louisiana	24.23 lb/hr	FPM	---	GCP/Pipeline NG	Mar-08	RBLC # LA-0224
Kleen Energy Systems	Connecticut	11 lb/hr (15.2 lb/hr)	FPM_{10}	---	---	February 2008	RBLC # CT-0151

[26] As noted above, this permit is currently under administrative appeal; however, the appeal does not pertain specifically to the BACT analysis for PM_{10} or to the permit's emissions limits for PM_{10}.

[27] These limits are equivalent to 0.0048 lb/MBBtu without duct firing and 0.0049 lb/MMBtu with duct firing, based on the size of the CTs and duct burners.

The available add-on control technologies are ranked according to control effectiveness in Table 7-8.

Table 7-8: PM Control Technologies Ranked by Control Effectiveness

PM Control Technologies	Emission Rate (lb/MMBtu, 3-hr average)	Emission Rate w/Duct Burners (lb/MMBtu, 3-hr average)
Wet ESP	0.00004	0.00004
Dry ESP/Baghouse	0.00004	0.00004
Wet Scrubber (Venturi)	0.0004	0.0004
Baseline (Clean Fuel)	0.0027	0.0035

Step 4 – Economic, Energy and Environmental Impacts

The applicant provided a cost analysis based on information provided in *Controlling Fine PM*. A modified version of this analysis is provided in Table 7-9. The amount of $PM_{2.5}$ removed is based on the baseline (natural gas) emission rates in Table 7-8. Because add-on PM controls have not been applied to CTs, the control efficiencies evaluated are considered conservative. With cost-effectiveness values ranging between $109,000 and $193,000 per ton of $PM_{2.5}$ removed, add-on controls are considered cost-prohibitive for the PHPP.

Table 7-9: Cost Analysis for Add-on PM Control Technologies

	Wet ESP	Dry ESP	Baghouse (pulse-jet cleaned)	Wet Scrubber (Venturi)
Flowrate (ft^3/min)	946,777	946,777	946,777	946,777
Capital Costs ($/scfm)	$20	$10	$6	$3
Capital Costs ($)	$18,935,540	$9,467,770	$5,680,662	$2,366,942.50
Cost Recovery Factor	0.11	0.11	0.11	0.11
Annualized Capital Costs ($/yr)	$2,082,909	$1,041,454.70	$624,872.82	$260,363.68
O & M Costs ($/scfm)	$5	$3	$5	$4.40
O & M Costs ($/yr)	$4,733,885	$2,840,331	$4,733,885	$4,165,819
Total Annualized Costs ($/yr)	$6,816,794	$3,881,786	$5,358,758	$4,426,182
Removal Efficiency	99.1%	99%	99%	90%
Tons of $PM_{2.5}$ Removed (TPY)	35.38	35.34	35.34	32.13
Cost Effectiveness ($/ton removed)	$192,680	$109,830	$151,620	$137,760

Step 5 – Select BACT

After eliminating wet ESP, dry ESP, fabric filter, and wet scrubber due to economic impacts, we

have determined that BACT is clean fuel, good combustion practices, a PM, PM_{10}, and $PM_{2.5}$ limit of 0.0027 lb/MMBtu without duct burning and a limit of 0.0035 lb/MMBtu with duct burning based on a 3-hr average. Additionally, we are setting mass emission limits of 4.7 lb/hr without duct firing and 8.0 lb/hr with duct firing based on a 3-hr average. By "clean fuel" we mean Public Utilities Commission (PUC)-quality natural gas. PUC-quality pipeline natural gas shall not exceed a sulfur content of 0.20 grains per 100 dry standard cubic feet on a 12-month rolling average and shall not exceed a sulfur content of 1.0 grains per 100 dry standard cubic feet, at any time. This limit is lower than the limit proposed by the applicant. However, when comparing the applicant's proposed emission rates to other recently permitted sources, the applicant's values are in some cases twice as high. The applicant relied solely on the Victorville II facility in California in proposing emission rates. While the two facilities are very similar, a BACT analysis should be more comprehensive in evaluating proposed limits. A broader review of recent BACT determinations demonstrates that BACT is lower than the limits proposed by the applicant.

7.1.4 GHG Emissions

Step 1 – Identify all control technologies

The inherently lower-emitting control options for GHG emissions include[28]:

- *Use of new thermally efficient combined cycle gas turbines* – A combined-cycle gas turbine recovers the waste heat from the gas turbine using a heat recovery steam generator (HRSG). The use of the HRSG allows more energy to be produced without additional fuel use.

The add-on control options for GHG emissions include:

- *Carbon capture and sequestration (CCS)* – CCS is a technology that involves capture and storage of CO_2 emissions to prevent their release to the atmosphere. For a gas turbine, this includes removal of CO_2 emissions from the exhaust stream, transportation of the CO_2 to an injection site, and injection of the CO_2 into available sequestration sites. Potential CO_2 sequestration sites include geological formations (including oil and gas fields for enhanced recovery) and ocean storage.

Step 2 – Eliminate technically infeasible control technologies

CCS

As described briefly above, CCS involves three main components: capturing the CO_2 emissions from the exhaust stream, transporting the captured CO_2 to the sequestration site, and injection of the CO_2 into a geologic reservoir for long-term sequestration. All three of these aspects are relevant when determining whether CCS is technically feasible for a particular project.

[28] In addition to the measures discussed here specifically for the gas turbines, we note that the project design includes 50 MW of potential solar thermal power generation, which represents an inherently lower-emitting technology for the facility as a whole.

The applicant proposed to eliminate CCS because CO_2 capture is not technically feasible for CTs. The applicant identified three potential processes for capturing CO_2 from flue gas: solvent-based processes, sorbent-based processes, and membrane-based processes. The applicant concluded that these processes were not technically feasible due to limited experience in the energy industry and lack of commercial demonstrations. However, commercial CO_2 recovery plants have been in existence since the late 1970s, with at least one plant capturing CO_2 from gas turbines.[29,30] The applicant also identified as a hurdle that commercial demonstrations have only captured a fraction of the CO_2 in flue gas. This consideration appears to be less of a technical feasibility issue than one of cost, which would be more appropriately addressed in Step 4 of the BACT analysis. Based on available information, we consider carbon capture from gas turbines to be technically feasible for the Project.

In its application, the applicant identified several geological formations in the lower San Joaquin Valley and Ventura County that could potentially provide a suitable site for geologic sequestration; a map of those sites provided in the Project application is provided in Figure 7-1.

While geotechnical analyses have not been conducted to verify the suitability of these sites, other proposals have been made to capture and sequester CO_2 emissions in the San Joaquin Valley; as a result, there is a reasonable presumption that suitable sequestration sites do exist in these areas despite the lack of extensive studies prepared for this Project. Nevertheless, the primary issue with the feasibility of CCS in this case lies with the location of the PHPP in relation to the sequestration sites and the surrounding geography. As shown in the figure above, significant mountain ranges lie between the project location and the potential sequestration sites (oil fields, gas fields, and ocean storage). Sequestration of CO_2 emissions from the Project would require construction of CO_2 pipelines through these mountains. The offsite logistical barriers of constructing such a pipeline (e.g., land acquisition, permitting, liability, etc.) make this technology technically infeasible for the Project.

Because constructing a new CO_2 pipeline was determined to be technically infeasible, the applicant also evaluated whether CO_2 pipelines were already available near the proposed Project. The Technical Advisory Committee for the California Carbon Capture and Storage Review Panel stated in an August 2010 report that there are no existing CO_2 pipelines in California.[31] In addition, based on a search of the California Environmental Quality Act (CEQA) State Clearinghouse database maintained by the California Office of Planning and Research, there are no CO_2 pipeline projects underway in California subject to CEQA. Last, the applicant also contacted the Department of Oil, Gas and Geothermal Resources and facilities operating in Kern County, and again, found no existing pipelines in California.

---

[29] Herzog, H.J., "An Introduction to CO2 Separation and Capture Technologies," Energy Laboratory Working Paper, (1999). Available at http://sequestration.mit.edu/pdf/introduction_to_capture.pdf.

[30] Johnson, D., Reddy, S., & Brown, J.H. (2009), Commercially Available CO2 Capture Technology. *Power*. Retrieved from http://www.powermag.com/coal/2064.html.

[31] This information is available at http://climatechange.ca.gov/carbon_capture_review_panel/meetings/2010-08-18/white_papers/Carbon_Dioxide_Pipelines.pdf.

Figure 7-1 | Potential CO_2 Sequestration Sites in Southern California

Data source: National Energy Technology Laboratory, Department of Energy. 2010 Carbon Sequestration Atlas of the United States and Canada, Third Edition

In sum, while we have determined that CO_2 capture and storage is technically feasible, we conclude that transport of the captured CO_2 to the potential sequestration sites is not feasible. As a result, CCS is not technically feasible for the Project and will not be considered further in the BACT analysis. We note that evaluation of long-term CO_2 storage is an important part of the

technical feasibility analysis. However, because transport of CO_2 is not technically feasible, it is not necessary to evaluate the feasibility of CO_2 storage.

Step 3 – Rank remaining control technologies

After elimination of CCS as a potential control technology, the use of a thermally efficient combined-cycle gas turbine and a combined-cycle facility are the only control methods remaining. The expected emissions from a facility with these control options is compared with the emissions from a simple-cycle gas turbine in Table 7-10. Currently, the only other similar facility with a GHG BACT limit is the Russell City Energy Center, to be located in Hayward, California. The PSD permit for this facility has a voluntary GHG limit of a heat rate not to exceed 7,730 Btu/kWh for each CT and HRSG.

Table 7-10: GHG Control Technologies Ranked by Control Effectiveness

GHG Control Technologies	Emission Rate (lb CO_2/MWh)
New combined-cycle gas CT	774
Existing combined-cycle CTs[32]	824-996
Simple-cycle CTs[33]	1,319

Step 4 – Economic, Energy, and Environmental Impacts

The applicant has chosen the highest ranked control option for each unit, and we are not aware of any significant or unusual adverse environmental impacts associated with the chosen technology.

Step 5 – Select BACT

Based on a review of the available control technologies for GHG emissions from natural gas-fired combustion turbines, we have concluded that BACT for this source is the use of new thermally efficient CTs and emission limits of 774 lb CO_2/MWh for source-wide net output, and 117 lb CO_2/MMBtu heat input for each gas turbine and duct burner (both based on a 30-day rolling average). The emission limits are based on the emission factor provided by the applicant of 53.06 kg/MMBtu, the 1,736 MMBtu/hr heat input of each CT operating 8,760 hours per year, and the 550 MMBtu/hr duct burner for each CT operating 2,000 hours per year.

A number of issues regarding these limits bear clarification. First, the pollutant that is subject to regulation under the Clean Air Act for PSD permitting purposes is a group of six gases: carbon dioxide, methane, nitrous oxide, hydrofluorocarbons, perfluorocarbons, and sulfur hexafluoride. As a general matter, it may thus be appropriate to establish BACT limits on a CO_2e basis. In this case, however, we have elected to establish the BACT limit for CO_2 specifically. The purpose of this is to enable the use of CO_2 CEMS for monitoring purposes. Because the CEMS are required for other regulatory purposes, they offer a cost-effective and reliable method for monitoring

[32] These figures are based on GHG performance information provided by the applicant in Tables 3 and 4 to the PHPP GHG BACT Analysis dated May 2011. These values are derived from 2008 data from the California Energy Commission for similar facilities with energy output of at least 3,000 GWh per year.

[33] These numbers are based on the proposed CTs operating in simple cycle with a gross output of 154 MW each.

compliance. Using CO_2 as a surrogate for the total emissions on a CO_2e basis is appropriate in this case because nitrous oxide and methane are emitted from CTs in minor amounts and the majority of the GHG emissions actually are CO_2. For example, EPA's emission factors for CO_2, methane, and nitrous oxide from the combustion of natural gas are 53.06 kg/MMBtu, 0.0059 kg/MMBtu, and 0.0001 kg/MMBtu, respectively. The emission factor for all GHGs on a CO_2e basis is 53.21 kg/MMBtu. Thus, even after accounting for the global warming potential of methane and nitrous oxide, the CO_2 emission factor accounts for 99.7% of the emission on a CO_2e basis. Further, an emission limitation that limits CO_2 emissions from the combustion of natural gas inherently limits the emission of methane and nitrous oxide. As a result, we believe that for this particular source, formulating the emission limits and monitoring requirements in terms of CO_2 rather than on a CO_2e basis is appropriate. The applicant has proposed a BACT limit of 1,020,000 tons of CO_2 per year for each CT. However, a limit based on the amount of CO_2 generated per MWh will ensure that the CTs are operating at peak efficiency. An input-based limit is also necessary to ensure peak operating efficiency of the gas turbine because the solar thermal operation will at times contribute to the electric output.

7.1.5 BACT During Startup and Shutdown

It is not technically feasible to use SCR and oxidation catalyst to control NO_X and CO emissions when the equipment is outside of the manufacturer's recommended operating temperature ranges. For SCR and oxidation catalyst this occurs during turbine startup or shutdown. Therefore, BACT is achieved by minimizing the time for startup and shutdown. The PHPP will have a 110 MMBtu/hr auxiliary boiler that will be used to reduce the startup time for each turbine. The applicant has proposed the following NO_X and CO emission rate limits for each event:

- Hot/Warm Startup: 40 pounds of NO_X and 329 pounds of CO per turbine
- Cold Startup: 96 pounds of NO_X and 410 pounds of CO per turbine
- Shutdown: 57 pounds of NO_X and 337 pounds of CO per turbine

An evaluation of startup and shutdown emission limits for other similar sources found a wide range of limits. In many cases, limits are based on pounds per hour or pound per event,[34] and this approach makes it difficult to compare BACT determinations because mass emission rates vary based on the size of the unit. Other facilities have longer averaging periods (24-hr), which may incorporate startup and shutdown emissions. Because the PHPP has short 1-hour averaging periods, it is appropriate to set limits on a mass basis and limit the duration of startup and shutdown events. Based on the available information, the emission rate limits and fast startup and shutdown times for the CTs represent BACT for NO_x and CO during startup and shutdown. Therefore, we have determined that BACT during startup and shutdown for NO_X and CO for the PHPP is as described below in Table 7-11.

[34] Recently issued permits with these types of limits include the permits for the Avenal Energy Project in California, the Russell City Energy Project in California, the Victorville II Hybrid Power Project in California, and the Colusa Generating Station in California.

In addition, we have determined that the startup duration limits also constitute BACT for GHG emissions, because the shorter startup time increases the overall thermal efficiency of the facility. Therefore, BACT for the PHPP's GHG emissions during startup is 110 minutes for a cold startup and 80 minutes for a warm/hot startup.

Table 7-11: Summary of NO_X and CO BACT Limits During Startup and Shutdown

	NO_X	CO	Duration
Cold Startup	96 lb/event	410 lb/event	110 minutes
	52.4 lb/hr	224 lb/hr	
Warm/Hot Startup	40 lb/event	329 lb/event	80 minutes
	30 lb/hr	247 lb/hr	
Shutdown	57 lb/event	337 lb/event	30 minutes
	114 lb/hr	334.6 lb/hr	

7.2. BACT for Auxiliary Boiler and Heater

The applicant is proposing to construct a 110 MMBtu/hr boiler that will be used to start up the CTs, and a 40 MMBtu/hr heat transfer fluid (HTF) heater as part of the solar array system. Both units will be fired with natural gas. The boiler will be limited to 500 hours of operation per year and the HTF heater will be limited to 1,000 hours of operation per year. The low hours of operation and low emission rates proposed result in very low tons per year emission rates for each unit. The boiler and HTF heater are subject to BACT for NO_X, CO, PM, PM_{10}, $PM_{2.5}$, and GHGs. A top-down BACT analysis for each pollutant has been performed and is summarized below.

7.2.1 Nitrogen Oxide Emissions

Step 1 - Identify All Control Options

The following inherently lower-emitting control options for NO_X emissions include:

- Low NO_X burner design (e.g. low NO_X burners, flue gas recirculation)
- Limited use of equipment (limits on the hours of operation)

The available add-on NO_X control technologies include:

- Selective Catalytic Reduction (SCR) system
- EMx™ system (formerly SCONOx)
- Selective non-catalytic reduction (SNCR)

Step 2 – Eliminate Technically Infeasible Options

SCR, EMx™, and SNCR are considered technically infeasible control options. The applicant estimated the exhaust temperature for each unit at 300°F. This is below the temperature operating range for SCR, EMx™, and SNCR, which are all generally above 400°F.

Step 3 – Rank remaining control technologies
The applicant proposed a NO_X emission limit of 9 ppm at 3% O_2 based on a 3-hr average using ultra-low NO_X burner design. With the proposed low NO_X burner designs and limited hours of operation the auxiliary boiler will emit up to 0.30 TPY of NO_X and the heater will emit up to 0.22 TPY. A review of other BACT determinations was not performed because it is very unlikely that a more detailed review would change the final determination due to the limited use and low ton per year emission rates associated with the proposed limits.

Table 7-12: .NO_X Control Technologies Ranked by Control Effectiveness

NO_X Control Technologies	Emission Rate (ppmvd @ 3% O_2)
Low NO_X burners and limited use	9

Step 4 – Economic, Energy, and Environmental Impacts
The applicant has chosen the highest ranked control option for each unit, and we are not aware of any significant or unusual environmental impacts associated with the chosen technology.

Step 5 – Select BACT
Based on the review of the available control technologies, we have concluded BACT is the limited hours of operation, ultra-low NO_X burners and an emission rate of 9.0 ppm at 3% O_2 based on a 3-hr test average.

7.2.2 Carbon Monoxide Emissions

Step 1 – Identify All Control Technologies
The following inherently lower-emitting control options for CO emissions include:

- Good combustion practices
- Limited use (limits on the hours of operation)

The available add-on CO control technologies include:

- Oxidation catalyst
- EMx™ (formerly $SCONO_X$)

Step 2 – Eliminate Technically Infeasible
Oxidation catalyst and EMx™ are considered technically infeasible control options. The applicant estimated the exhaust temperature for each unit at 300F. This is below the temperature operating range for oxidation catalyst and EMx™, which are generally above 400F.

Step 3 – Rank Remaining Control Technologies
The applicant proposed a CO limit of 50 ppm at 3% O_2 based on a 3-hr average using good combustion practices. With the proposed good combustion practices and limited hours of operation, the auxiliary boiler will emit up to 1.01 TPY, and the heater will emit up to 0.74 TPY, of CO. A review of other BACT determinations was not performed because it is very unlikely

that a more detailed review would change the final determination due to the limited use and low ton per year emission rates associated with the proposed limits.

Table 7-13: CO Control Technologies Ranked by Control Effectiveness

CO Control Technologies	Emission Rate (ppmvd @ 3% O_2)
Good combustion practices and limited use	50

Step 4 – Economic, Energy and Environmental Impacts
The applicant has chosen the highest ranked control option for each unit, and we are not aware of any significant or unusual adverse environmental impacts associated with the chosen technology.

Step 5 – Select BACT
Based on the review of the available control technologies, we have concluded that BACT is the limited hours of operation, good combustion practices and an emission rate of 50.0 ppm at 3% O_2 based on a 3-hr test average.

7.2.3 PM, PM10 and PM2.5 Emissions

The applicant has assumed that all particulate emissions from the auxiliary boiler and process heater are $PM_{2.5}$. As a result, the BACT analyses for PM, PM_{10} and $PM_{2.5}$ have been combined. Additionally, the analysis evaluates total particulate matter – filterable and condensable.

Step 1 – Identify All Control Technologies
The following inherently lower-emitting control options for PM, PM_{10}, and $PM_{2.5}$ emissions include:

- Low particulate fuels, low sulfur fuels, and/or pipeline natural gas (also referred to as "clean fuel")
- Good combustion practices (including air inlet filter)
- Limited use (limits on the hours of operation)

The available add-on PM, PM_{10}, $PM_{2.5}$ control technologies include:

- Cyclones (including multiclones)
- Wet scrubber
- Dry electrostatic precipitator (ESP)
- Wet ESP
- Baghouse/fabric filter.

Step 2 – Eliminate Technically Infeasible Control Options

All of the control technologies identified are technically feasible except for cyclones (including multiclones). As evaluated for the CTs, the low grain loading associated with natural gas emissions makes cyclones technically infeasible for this application.

Step 3 – Rank Remaining Control Technologies

We were not able to identify any CT using add-on PM controls; however, they are considered technically feasible and are therefore being further evaluated. The available control technologies are ranked according to control effectiveness in Table 7-14. This analysis is based on the PM, PM_{10}, and $PM_{2.5}$ analysis for the CTs.

With the proposed good combustion practices and limited hours of operation, the auxiliary boiler will emit up to 0.25 TPY of PM, PM_{10}, and $PM_{2.5}$ and the heater will emit up to 0.15 TPY. A review of other BACT determinations was not performed because it is very unlikely that a more detailed review would change the final determination due to the limited use and low ton per year emission rates associated with the proposed limits.

Table 7-14: PM Control Technologies Ranked by Control Effectiveness

PM Control Technologies	Control Efficiency
Wet ESP	99.1%
Dry ESP/baghouse	99%
Wet Scrubber (Venturi)	90%
Clean fuel, good combustion practices, and limited use	0% (baseline)

Step 4 – Economic, Energy and Environmental Impacts

The applicant eliminated the use of add-on PM controls for each unit because of the associated economic impacts. The 110 MMBtu/hr auxiliary boiler is limited to 500 hours of operation per year and has a potential to emit 0.2 TPY of PM, PM_{10}, and $PM_{2.5}$. The 40 MMBtu/hr heater is limited to 1,000 hours of operation per year and has a potential to emit 0.15 TPY of PM, PM_{10}, and $PM_{2.5}$. Due to the limited hours of operation and limited environmental benefit it would be impractical to require add-on controls to remove less than 0.45 TPY of PM, PM_{10}, and $PM_{2.5}$. However, the applicant also provided an economic analysis for add-on controls, which is provided in Tables 7-15 and 7-16.

Table 7-15: Cost Analysis for Add-on PM Control Technologies for the Auxiliary Boiler

Control Device	Wet ESP	Dry ESP	Pulse Jet Fabric Filter	Wet Scrubber
Flowrate (scfm)	28416	28416	28416	28416
Capital Costs ($/scfm)	$20	$10	$6	$3
Capital Costs ($)	$568,320	$284,160	$170,496	$71,040.00
Cost Recovery Factor	0.11	0.11	0.11	0.11
Annualized Capital Costs ($/yr)	$62,515	$31,257.60	$18,754.56	$7,814.40
O & M Costs ($/scfm)	$5	$3	$5	$4.40
O & M Costs ($/yr)	$142,080	$85,248	$142,080	$125,030
Total Annualized Costs ($/yr)	$204,595	$116,506	$160,835	$132,845
Removal Efficiency	99.1%	99%	99%	90%
Tons of $PM_{2.5}$ Removed (TPY)	0.20	0.20	0.20	0.18
Cost Effectiveness ($/ton removed)	**$1,032,300**	**$588,400**	**$812,300**	**$738,000**

Table 7-16: Cost Analysis for Add-on PM Control Technologies for the HTF Heater

Control Device	Wet ESP	Dry ESP	Baghouse (pulse- jet cleaned)	Wet Scrubber
Flowrate (scfm)	10612	10612	10612	10612
Capital Costs ($/scfm)	$20	$10	$6	$3
Capital Costs ($)	$212,240	$106,120	$63,672	$26,530.00
Cost Recovery Factor	0.11	0.11	0.11	0.11
Annualized Capital Costs ($/yr)	$23,346	$11,673.20	$7,003.92	$2,918.30
O & M Costs ($/scfm)	$5	$3	$5	$4.40
O & M Costs ($/yr)	$53,060	$31,836	$53,060	$46,693
Total Annualized Costs ($/yr)	$76,406	$43,509	$60,064	$49,611
Removal Efficiency	99.1%	99%	99%	90%
Tons of $PM_{2.5}$ Removed (TPY)	0.15	0.15	0.15	0.14
Cost Effectiveness ($/ton removed)	**$514,000**	**$293,000**	**$404,500**	**$367,500**

Step 5 – Select BACT

Based on the review of the available control technologies, we have concluded BACT is the limited hours of operation, good combustion practices, and clean fuel. By "clean fuel" we mean Public Utilities Commission (PUC)-quality natural gas. PUC-quality pipeline natural gas shall not exceed a sulfur content of 0.20 grains per 100 dry standard cubic feet on a 12-month rolling average and shall not exceed a sulfur content of 1.0 grains per 100 dry standard cubic feet, at any time.

Additionally, based on the PTE for each unit, we are setting a PM, PM_{10}, and $PM_{2.5}$ limit of 0.8 lb/hr for the boiler and 0.3 lb/hr for the HTF heater based on a 3-hr average.

7.2.4 GHG Emissions

Step 1 – Identify all control technologies
The applicant generally assumed that the auxiliary boiler and HTF heater would incorporate the newest designs that increase thermal efficiency, such as new burner technologies and modern optimized instrumentation and controls.

The inherently lower-emitting control options for GHG emissions include:

- *Conducting an annual boiler tune-up* – this would ensure that optimal thermal efficiency is maintained. Maintaining higher thermal efficiency reduces the amount of fuel combusted, which helps to minimize GHG emissions.

The add-on control options for GHG emissions include:

- *CCS* – CCS is a technology that involves capture and storage of CO_2 emissions to prevent their release to the atmosphere. For a gas turbine, this includes removal of CO_2 emissions from the exhaust stream, transportation of the CO_2 to an injection site, and injection of the CO_2 into available sequestration sites. Potential CO_2 sequestration sites include geological formations (including oil and gas fields for enhanced recovery) and ocean storage.

Step 2 – Eliminate technically infeasible control technologies

CCS
The GHG BACT analysis for the CTs, discussed above, concluded that although CO_2 capture and storage is technically feasible, transport of the captured CO_2 to the potential sequestration sites is not technically feasible. Using this same analysis, CCS is also not technically feasible for the auxiliary boiler and HTF heater and will not be considered further in the BACT analysis.

Step 3 – Rank remaining control technologies
After elimination of CCS as a potential control technology, the purchase of thermally efficient units and annual boiler tune-ups are the remaining technologies. Both of these options will be required.

Step 4 – Economic, Energy, and Environmental Impacts
The applicant has chosen the highest ranked control option for each unit, and we are not aware of any significant or unusual adverse environmental impacts associated with the chosen technology.

Step 5 – Select BACT
Based on a review of the available control technologies for GHG emissions from natural gas-fired boilers and process heaters, we have concluded that BACT for this source is the purchase of thermally efficient units, conducting annual boiler tune-ups on each unit, limiting the auxiliary boiler to a heat input of 110 MMBtu/hr and 500 hours of operation per year based on a 12-month rolling total, and limiting the HTF heater to 40 MMBtu/hr and 1,000 hours of operation per year based on 12-month rolling total. Currently, there are no other facilities with GHG BACT limits for limited use natural gas-fired boilers and process heaters.

7.3 BACT for Emergency Internal Combustion Engines

The project includes a 2,862 HP (2134 kW) diesel-fired emergency generator and a 182 HP (138kW) diesel-fired emergency fire pump engine. Each engine will be limited to 50 hours of operation each year. The low hours of operation result in very low tons per year emission rates for each unit. This equipment is subject to BACT for NO_X, CO, PM, PM_{10}, $PM_{2.5}$, and GHGs. A top-down BACT analysis has been performed and is summarized below.

7.3.1 NO_X, CO, PM, PM10, PM2.5, and GHG Emissions

Step 1 -- Identify all control technologies
The control options for NO_X emissions from engines include SCR, NO_X reducing catalyst, NO_X adsorber, catalyzed diesel particulate filter, catalytic converter, and oxidation catalyst.[35] A catalytic converter and oxidation catalyst are also control options for CO emissions. For PM, PM_{10}, and $PM_{2.5}$ emissions, a diesel particulate filter/trap can be added on.

Unlike other combustion equipment (e.g., CTs and boilers), new engines are required to be certified in compliance with NSPS requirements, including emission limits, upon purchase. Different types of engines have different emission requirements based on the type of engine being purchased (emergency engine, emergency fire pump engine, or non-emergency engine). Engine manufacturers may need to employ some of the control technologies identified above in order to comply with the NSPS emission limits, depending on the type of engine and the applicable limits. The applicant is proposing to construct an emergency engine and an emergency fire pump engine. As a result, to comply with NSPS the applicant must purchase engines that meet the emission requirements for emergency engines and emergency fire pump engines. However, we note that the applicant could purchase engines that meet the NSPS standards for non-emergency engines, which have more stringent limits, and operate them as emergency engines. In addition, the applicant must comply with California Air Resources Board (CARB) emission standards (Tier 2 standards for the emergency generator and Tier 3 standards for the emergency fire pump engine); however, the CARB standards are the same as the applicable NSPS requirements. As a result, this review identifies the control technologies to be:

35 The applicant discusses these control options in Section 8.4 of the "Supplemental Information for the Application for PSD Permit" dated July 21, 2010.

- NSPS-compliant emergency engine and NSPS-compliant emergency fire pump engine
- Engines that meets NSPS for non-emergency engines
- Limiting use (limits on the hours of operation)

Step 2 – Eliminate technically infeasible control options
All of the control technologies identified are assumed to be technically feasible.

Step 3 – Rank remaining control technologies
The available control technologies are ranked according to control effectiveness in Table 7-17.[36]

Table 7-17: Emergency Engine Control Technologies Ranked by Control Effectiveness

Engine Type	NMHC+NO_X (g/kW-hr)	PM (g/kW-hr)	CO (g/kW-hr)
NSPS-Non-emergency (for 135 kW)	0.02[37]	0.59	5.0
NSPS-Non-emergency (for 2000 kW)	1.07[38]	0.10	3.5
NSPS-Fire Pump Engines (for 135 kW)	4.0	0.20	3.5
NSPS-Emergency (for 2000 kW)	6.4	0.20	3.5

Step 4 – Economic, energy and environmental impacts
Due to economic impacts and limited environmental benefit, the applicant eliminated add-on controls for the engines. We agree that the top-ranked control technology (purchasing engines that meet NSPS standards for non-emergency engines and operating them as emergency engines) would be impractical in this case. This is illustrated in Table 7-18 by the potential emissions from these units (based on 50 hours of operation per year and complying with the NSPS for emergency engines and emergency fire pump engines). Requiring the additional reductions in emissions that would be gained by use of engines that meet NSPS standards for non-emergency engines would have very little environmental benefit, which would not justify the cost. While the potential CO_2e emissions associated with this equipment are higher than those of the other pollutants, they still represent less than 0.01% of source-wide CO_2e emissions. A review of other BACT determinations was not performed because it is very unlikely that a more detailed review would change the final determination due to the limited use and low ton per year emission rates associated with the proposed limits.

36 CARB-compliant engines are not listed in the rankings because the emission limitations are the same as for NSPS-compliant engines.

[37] The actual applicable NSPS limits are 0.40 g/kW-hr for NOX and 0.19 g/kW-hr for NMHC. The tow limits were added together in order to compare them to the other types of engines

[38] The actual applicable NSPS limits are 0.67 g/kW-hr for NO_X and 0.40 g/kW-hr for NMHC. The two limits were added together in order to compare them to the other types of engines.

Table 7-18: Summary of Potential to Emit for Emergency Engines

Pollutant	Emergency Generator (TPY)	Emergency Fire Pump Engine (TPY)
NO_X	0.67	0.03
CO	0.39	0.03
PM, PM_{10}, $PM_{2.5}$	0.02	<0.01
CO_2e	27.6	4.41

Step 5 – Select BACT

Based on the review of the available control technologies, we have concluded that BACT is the limited hours of operation and the emission limits listed in Table 7-19 based on a 3-hour average.[39] The NSPS for engines does not currently regulate GHG emissions, but a separate GHG limit is not being proposed. It is assumed that newly purchased engines would be the most energy efficient available and that operating in compliance with NSPS requirements will ensure that each engine is properly maintained and as efficient as possible.

Table 7-19: Summary of BACT Emission Limits for Emergency Engines

Engine	NMHC+NOX (g/kW-hr)	PM (g/kW-hr)	CO (g/kW-hr)
135 kW Emergency Fire Pump Engine	4.0	0.20	3.5
2000 kW Emergency Engine	6.4	0.20	3.5

7.4 BACT for Cooling Tower

The PHPP includes a 130,000 gallons per minute (gpm), ten-cell evaporative (wet) cooling tower. Fugitive particulate emissions are generated from the cooling tower due to the total dissolved solids (TDS) in the water. The cooling tower is subject to BACT for PM, PM_{10}, and $PM_{2.5}$. A top-down BACT analysis has been performed and is summarized below. The applicant conservatively assumed PM, PM_{10} and $PM_{2.5}$ emissions from the cooling tower were equivalent.

Step 1 – Available Control Technologies

The following inherently lower-emitting control options for PM, PM_{10}, and $PM_{2.5}$ emissions include:

- *Dry cooling* - uses an air cooled condenser (ACC) that cools the steam turbine-generators' exhaust steam using a large array of fans that force air over finned tube heat exchangers. The exhaust from the steam turbine flows through a large diameter duct to the ACC where it is condensed inside the tubes through indirect contact with the ambient air. The heat is then released directly to the atmosphere.

39 These limits are the same as the applicable CARB Tier 2 and Tier 3 standards.

- *Wet-dry hybrid cooling* – uses wet and dry cooling technologies in parallel, and uses all of the equipment involved in both wet and dry cooling. Hybrid cooling technology divides the cooling function between the wet and dry systems depending on the capabilities of each system under different environmental and operational conditions.

The available add-on PM, PM_{10}, and $PM_{2.5}$ control technologies include:

- Drift eliminators

Step 2 – Eliminate Technically Infeasible

All of the available control options identified in Step 1 are technically feasible.

Step 3 – Rank Remaining Control Technologies

The types of cooling towers are ranked according to control effectiveness in Table 7-20.

Table 7-20: Cooling Tower Control Technologies Ranked by Control Effectiveness

Control Technologies	Emission Rate (TPY of $PM/PM_{10}/PM_{2.5}$)
Dry cooling	0
Wet-dry hybrid cooling	3.6[40]
Wet cooling with 0.0005% drift eliminators	7.1

Step 4 – Economic, Energy and Environmental Impacts

The applicant eliminated the use of both a dry cooling system and wet-dry hybrid cooling system due to the associated economic and environmental impacts. The use of a dry or hybrid wet-dry system would reduce the overall efficiency of the facility, due to the additional energy requirements for the wet and hybrid systems. The applicant also conducted an economic analysis comparing the annual operation costs of wet and dry cooling systems. The applicant's analysis is reproduced in Table 7-21.

Table 7-21: Wet and Dry Cooling Tower Cost Analysis Provided by the Applicant

	Wet Cooling Tower	Dry Cooling Tower
Required Power		
Fan Power(e)	1,700 kW	6,350 kW
Circulating Pump Power	2,400 kW	0 kW

[40] The applicant did not estimate potential emissions from a wet-dry hybrid system. We have approximated emissions from such a system to be one-half of those from a wet cooling system.

	Wet Cooling Tower	Dry Cooling Tower
Power Loss Due to High Steam Turbine Backpressure	0 kW	536 kW
Water Treatment Power Consumption (Zero Liquid Discharge)	850 kW	<200 kW
Total Net Power Loss Effect	12,798 kW	14,042 kW
Costs		
Direct Capital Cost	$26,000,000	$59,000,000[e]
Water Pipeline Installation[f]	~$1,400,000	$0
Annualized Cost		
Capital Recovery[a]	$1,940,000	$3,680,000
Equivalent Electrical Power Cost[b]	$16,816,500	$18,451,000
Treatment Chemical Addition[c]	$250,000	$0
Makeup Cooling Water[d]	$824,200	~$100,000
Total $/year	**$19,830,700**	**$22,231,000**

Notes:
a) Assumes a 30-year lifetime with a 5.75% interest rate.
b) Assumes the facility operates 8,760 hour/yr and a power cost of $0.15/kWh.
c) Assumes that water treatment chemicals would be needed in a wet tower to prevent corrosion, bio-fouling, etc., but would not be needed for an ACC.
d) Estimated at $200/acre-foot and consumption of 4,121 acre-feet per year for wet cooling.
e) Does not include additional costs required for a steam turbine that can be operated at high back pressure.
f) Only includes the less than 2 miles of pipeline needed to connect to the regional backbone system. Dry cooling costs are underestimated since some water is needed even in a dry-cooled plant, which would still require a pipeline.

The cost effectiveness of using a dry cooling process to reduce 7.1 TPY of PM, PM_{10}, and $PM_{2.5}$ is $338,000 per ton. The applicant estimated a hybrid cooling system would have direct capital costs of $67 million and, as a result, would be even less cost-effective than a dry cooling system. Based on this information, we agree that using dry or hybrid cooling systems in this case would not be cost-effective and would contribute to a decrease in the overall energy efficiency of the facility.

Considering collateral environmental impacts, the use of wet cooling has a potential impact associated with additional consumption of water resources. However, the water being used for the cooling tower is from the Palmdale Water Reclamation Plant and therefore wet cooling is not expected to result in any significant adverse impact on water resources in the area.

Step 5 – Select BACT

The applicant proposed using a wet cooling tower with 0.0005% drift eliminators as BACT for

the steam turbine cooling system. A comparison of the drift elimination rates for other recently permitted cooling towers is provided in Table 7-22. Based on the available information, we have determined that BACT for the cooling towers is 0.0005% drift eliminators. Additionally, we are setting a mass emission limit of 1.6 lb/hr and TDS limit of 5000 ppm.

Table 7-22: Summary of Recent BACT Determinations for Drift Eliminators

Facility	Location	Limit	Permit Issuance	Source
J.K. Smith Generating Station	Kentucky	0.0005%	April 2010	RBLC # KY-0100
Chocolate Bayou Facility	Texas	0.0020%	June 2009	RBLC # TX-0549
CPV St Charles	Maryland	0.0005%	November 2008	RBLC # MD-0040
John W Turk Jr Power Plant	Arkansas	0.0005%	November 2008	RBLC # AR-0094

7.5 BACT for Fugitive Road Dust

Fugitive dust emissions will occur as a result of maintenance vehicle travel on paved and unpaved roadways in the solar field associated with the PHPP. Fugitive road dust is subject to BACT for PM, PM_{10}, and $PM_{2.5}$. A top-down BACT analysis has been performed and is summarized below.

Step 1 – Available Control Technologies
The control technologies for fugitive roadway dusts include: paved roads, gravel roads, chemical surfactants (also called "dust suppressants"), watering, and traffic speed controls.

Step 2 – Eliminate Technically Infeasible
All of the control technologies identified are technically feasible.

Step 3 – Rank Remaining Control Technologies
The available control options are ranked as follows:

- Paved roads
- Gravel roads
- Chemical surfactants, watering and traffic speed controls can result in various controls efficiencies depending on how each technology is employed (e.g., rate of application, specific speed limit)

Step 4 – Economic, Energy and Environmental Impacts

Paved roads – The applicant proposed to pave only the main access road to the plant because paving other less traveled roads would only have minimal environmental benefits. The applicant

noted that paving increases the amount of impervious surfaces, which increases storm water runoff, and that the infrequent rainstorms in the desert can also erode the dirt out from under the paved edges.

Gravel roads - The applicant eliminated gravel roads due to the potential for rocks to become airborne and damage the parabolic mirrors in the solar field. This would result in additional costs for repairing mirrors and a reduction in solar energy production.

Chemical surfactants, watering, and traffic speed controls - Surface watering and/or application of surfactants can be supplemented with limiting vehicle speed and restricting traffic in the unpaved areas. According to the applicant, experience in existing solar fields (e.g., the Solar Energy Generating Systems (SEGS) facility near Kramer Junction and Harper Lake) shows that use of a combination of the above methods is very effective in controlling fugitive dust. Use of soil stabilizers during the first few years of operation of the solar facility, followed by application of water and driving slowly in the solar field, leads to a very stable surface that yields only minor amounts of fugitive emissions. In addition, after the solar facility is built, it is in the operator's best interest to keep dust emissions to a minimum in order to reduce the amount of mirror washing and loss of efficiency from dirty mirrors.

Step 5 – Select BACT
The applicant proposed BACT for fugitive road dust as:

- Paving the main access road into the plant site
- Developing a dust control plan that includes inspection and maintenance procedures undertaken to ensure that the unpaved roads remain stabilized
- A durable non-toxic soil stabilizer will be applied through the solar field for dust control. Additionally, unpaved roads within the solar field used by wash trucks that spray and clean the mirrors will be treated with soil stabilizers periodically.
- Water will be applied by water trucks on regularly disturbed areas where soil stabilizers are not as effective due to frequent use. The water used in the mirror washing will also provide for some incidental dust control.
- Vehicle speeds will be limited to no more than 10 miles per hour on unpaved roadways, with the exception that vehicles may travel up to 25 miles per hour on stabilized unpaved roads as long as such speeds do not create visible dust emissions.

Based on the information provided, we have determined that the above measures represent BACT for fugitive road dust, and the fugitive dust control plan must include, at a minimum, the requirements listed above. This determination is consistent with other BACT determinations, as illustrated in Table 7-23, for onsite operations that cause vehicle traffic.

Table 7-23: Summary of Recent BACT Determinations for Fugitive Road Dust Emissions

Facility	Location	Control	Permit Issuance	Source
V & M Star	Ohio	Water, sweeping, chemical stabilization or suppressants	Draft January 2011	RBLC # OH-0344
Nucor Steel	Ohio	Water, resurfacing, chemical stabilization, and/or speed reduction	Draft December 2010	RBLC # OH-0341
Flopam Inc.	Maryland	Paved where practical, precautions taken to prevent dust from becoming airborne	June 2010	RBLC # LA-0240
Nucor Steel	Louisiana	Paved where practical, for unpaved roads use water or dust suppressant chemicals to reduce emissions and 15 mph speed limit	May 2010	RBLC # AR-0094
John W. Turk Jr Power Plant	Arkansas	Water/dust suppressing chemicals	November 2008	RBLC # AR-0094

7.6 BACT for Circuit Breakers

7.6.1 GHG

The circuit breakers are subject to BACT for GHG emissions. The only GHG emitted from circuit breakers is sulfur hexafluoride (SF_6). With the proposed control technologies, CO_2e emissions are estimated at 9.56 TPY.

Step 1 – Identify all control technologies

The inherently lower-emitting control options for GHG emissions include:

- *Use of dielectric oil or compressed air circuit breakers* – these types of circuit breakers do not contain any GHG pollutants.
- *Totally enclosed SF_6 circuit breakers with leak detection systems* – these types of circuit breakers have a maximum leak rate of 0.5% per year by weight and have an alarm warning when 10% of the SF_6 has escaped. The use of an alarm identifies potential leak problems before the bulk of SF_6 has escaped.

No add-on control options for GHG emissions were identified. Additionally, alternative gases to SF_6 are also currently not available.[41]

41 Information is available at http://www.epa.gov/electricpower-sf6/documents/new_report_final.pdf.

Step 2 – Eliminate technically infeasible control technologies
Both control options are assumed to be technically feasible.

Step 3 – Rank remaining control technologies
The expected emissions from the two control options are compared in Table 7-24. Currently, the only other similar facility with a GHG BACT limit is the Russell City Power Plant to be located in Hayward, California. The PSD permit for this facility has a voluntary GHG requirement to install the same leak detection system proposed for the PHPP.

Table 7-24: Circuit Breaker Control Technologies Ranked by Control Effectiveness

GHG Control Technologies	CO_2e Emission Rate (TPY)
Dielectric oil or compressed air circuit breakers	0
Enclosed-pressure SF_6 circuit breakers with 0.5% (by weight) annual leakage rate and leak detection systems	9.56

Step 4 – Economic, Energy, and Environmental Impacts
The applicant eliminated the use of dielectric oil or compressed air circuit breakers because they are an outdated technology and the SF_6 circuit breakers are more reliable. Specifically the applicant provides that according to the National Institute for Standards and Technology, SF_6 "offers significant savings in land use, is aesthetically acceptable, has relatively low radio and audible noise emissions and enables substations to be installed in populated areas close to the loads."[42] Dielectric oil or compressed air circuit breakers therefore have been eliminated based on the potential adverse environmental and energy impacts. Additionally, we are not aware of any significant or unusual environmental impacts associated with the chosen technology.

Step 5 – Select BACT
Based on a review of the available control technologies for GHG emissions from circuit breakers, we have concluded that the applicant's proposed requirements are BACT for this source: the use of enclosed-pressure SF_6 circuit breakers with an annual leakage rate of 0.5% by weight, a 10% by weight leak detection system, and 9.56 TPY of CO_2e based on a 12-month rolling total.

8. Air Quality Impacts

Clean Air Act section 165 and EPA's PSD regulations at 40 C.F.R. section 52.21 require an examination of the impacts of the proposed PHPP on ambient air quality. The applicant must demonstrate, using air quality models, that the facility's emissions of the PSD-regulated air pollutants would not cause or contribute to a violation of (1) the applicable

[42] Ibid.

National Ambient Air Quality Standards (NAAQS), or (2) the applicable PSD increments (explained below in Section 8.4). This section includes a discussion of the relevant background data and air quality modeling, and our conclusion that the Project will not cause or contribute to an exceedance of the applicable NAAQS or applicable PSD increments and is otherwise consistent with PSD requirements governing air quality.

8.1 Introduction

8.1.1 Overview of PSD Air Impact Requirements

Under the PSD regulations, permit applications for major sources must include an air quality analysis demonstrating that the facility's emissions of the PSD-regulated air pollutants would not cause or contribute to a violation of the applicable NAAQS or applicable PSD increments. (A PSD increment for a pollutant applies only to areas that meet the corresponding NAAQS.) The applicant provides separate modeling analyses for each criteria pollutant emitted above the applicable significant emission rate. If a preliminary analysis shows that the ambient concentration impact of the project by itself is greater than the Significant Impact Level (SIL), then a full or cumulative impact analysis is required for that pollutant. The cumulative impact analysis includes nearby pollution sources in the modeling, and adds a monitored background concentration to account for sources not explicitly included in the model. The cumulative impact analysis must demonstrate that the Project will not cause or contribute to a NAAQS or increment violation. Required model inputs characterize the various emitting units, meteorology, and the land surface, and define a set of receptors (spatial locations at which to estimate concentrations, typically out to 50 km from the facility at issue). Modeling should be performed in accordance with EPA's Guideline on Air Quality Modeling, in Appendix W to 40 CFR Part 51 (GAQM or Appendix W). AERMOD with its default settings is the standard model choice, with CALPUFF available for complex wind situations.

A PSD permit application typically includes a Good Engineering Practice (GEP) stack height analysis, to ensure a) that downwash is properly considered in the modeling for stacks less than GEP height, and b) that stack heights used as inputs to the modeling are no greater than GEP height, so as to disallow artificial dispersion from the use of overly tall stacks. The application may also include initial "load screening," in which a variety of source operating loads and ambient temperatures are modeled, to determine the worst case scenario for use in the rest of the modeling.

The PSD regulations also require an analysis of the impact on nearby Class I areas, generally those within 100 km, though the relevant Federal Land Manager (FLM) may specify additional or fewer areas. The analysis includes the NAAQS, PSD increments, and Air Quality Related Values (AQRVs). AQRVs are defined by the FLM, and typically limit visibility degradation and the deposition of sulfur and nitrogen. CALPUFF is the standard model choice for Class I analyses, since it can handle visibility chemistry as well as the typically large distances (over 50 km) to Class I areas.

Finally, the PSD regulations require an additional impact analysis, showing the Project's effect on visibility, soils, vegetation, and growth. This visibility analysis is independent of the Class I visibility AQRV analysis. The additional impact analysis for the PHPP is discussed in Section 9 below.

8.1.2 Identification of PHPP Modeling Documentation

The PSD modeling analysis for the PHPP went through several stages, reflecting the regulatory requirements and guidance clarifications that came into effect over time, as well as discussions between the applicant and EPA about the appropriate methodologies for impact assessment. In general, the latest analyses submitted by the applicant are discussed in this AAQIR, with some references to earlier work.

The PHPP modeling analysis comprises the eight documents listed in Table 8-1 below. The Class I and Class II Modeling Protocols (July 2008) describe the methods to be used for the air quality impact analyses, including choice of model and the preparation of model inputs such as meteorological data. The PSD Application (March 2009) contains the results of the modeling. After the application submittal, EPA policy changed so that the PM_{10} NAAQS could no longer be used as a surrogate for the $PM_{2.5}$ NAAQS, and EPA promulgated the 1-hour NO_2 NAAQS; neither $PM_{2.5}$ nor 1-hour NO_2 these was addressed in the original modeling. The applicant submitted Supplemental Information (June 2010) to update its modeling analysis by providing a $PM_{2.5}$ analysis and a 1-hour NO_2 analysis considering the Project and background concentrations; it also upgraded the additional impact analysis discussed in Section 9 below. The applicant's NO2 Memo #1 (October 2010) provides a cumulative 1-hour NO_2 analysis, which includes nearby sources in addition to the Project itself. Finally, the Updated Analyses Memo (March 2011) revises the $PM_{2.5}$ and 1-hour NO_2 analyses to account for corrected hourly emissions estimates for the nearby U.S. Air Force Plant 42, and to use a more conservative estimate of the NO_2 background concentration. The applicant also submitted additional documentation in NO2 Memo #2 (December 2010), and the NO2 Background Memo (July 2011), providing additional justification for the approaches taken for the applicant's 1-hour NO_2 analysis.

Table 8-1: Modeling Documentation for Palmdale Hybrid Power Project PSD Application

Short name	Citation
Class I Modeling Protocol	"Class I Area Dispersion Modeling Protocol for the Proposed Palmdale Hybrid Power Project", ENSR Corporation (document 10855-002-040C1MP), July 2008 (file "PHPP Class I Modeling Protocol.pdf"
Class II Modeling Protocol	"Class II Area Dispersion Modeling Protocol for the Proposed Palmdale Hybrid Power Project", ENSR Corporation (document 10855-002-040C2MP), July 2008 (file "PHPP Class II Modeling Protocol.pdf")
Original PSD Application	"Application for Prevention of Significant Deterioration Permit for Palmdale Hybrid Power Project", AECOM Environment (document 10855-002-040 PSD), March 2009 (file "Palmdale PSD Application.pdf")

Supplemental Information	"Palmdale Hybrid Power Project PSD Application, Supplemental Information", AECOM, June 2010 (file "Supplemental PSD Submittal 072010.pdf")
NO2 Memo #1	"Response to EPA Comments on AECOM 1-hour NO2 NAAQS Analysis for PHPP", Memorandum from Richard Hamel, AECOM, to Scott Bohning, EPA, October 7, 2010 (file "Response to EPA Comments on NO2 Modeling.pdf")
NO2 Memo #2	"Response to EPA Additional Comments on AECOM 1-hour NO2 NAAQS Analysis for Palmdale Hybrid Power Project", Memorandum from Richard Hamel, AECOM, to Scott Bohning, EPA, December 14, 2010 (file "Response to 2nd set of EPA Comments on NO2 Modeling.pdf")
Updated Analyses Memo	"Final Update to 1-hour NO2 and 24-hour PM2.5 NAAQS Analyses for Palmdale Hybrid Power Project", Memorandum from Richard Hamel, AECOM, to Scott Bohning, EPA, March 30, 2011 (file "Updated NO2 and PM2.5 Modeling Analyses for PHPP 033011.pdf")
NO2 Background Memo	"Justification of the use of the 3-year average 98th percentile ambient background concentration for PHPP 1-hour NO2 NAAQS Modeling", Memorandum from Richard Hamel, AECOM, to Scott Bohning, EPA, July 21, 2011 (file "1-hour NO2 Ambient Background Justification for PHPP NAAQS Modeling 072111.pdf")

8.2. Background Ambient Air Quality

The PSD regulations require the air quality analysis to contain air quality monitoring data as needed to assess ambient air quality in the area for the PSD-regulated pollutants for which there are NAAQS that may be affected by the source. In addition, for demonstrating compliance with the NAAQS, a background concentration is added to represent those sources not explicitly included in the modeling, so that the total accounts for all contributions to current air quality.

For background concentrations, PHPP chose the Lancaster Division Street monitor, which is the nearest available, except for SO_2, for which the Burbank West Palm Avenue is nearest. The most recent three years of data available at the time of the application are 2005-2007. (PSD Application p.6-2 pdf.47; see also Class II Modeling Protocol p.2-19 pdf.24) Based on their siting at more urbanized locations than the Project site, these monitors provide conservative estimates of background concentrations. The SO_2 monitor at Burbank West Palm Avenue is 34 miles away, but is in the eastern portion of urbanized Los Angeles with its many pollution sources, and therefore it provides a conservative estimate of the SO_2 background. The Lancaster Division Street monitor is just 2.5 miles from the PHPP power block; it is within the city of Lancaster, which has a population of some 150,000, and is near several roads; it is thus conservative for most pollutants. This site is discussed further below in the section on NO_2-specific issues.

Table 8-2 below describes the maximum background concentrations of the PSD-regulated pollutants for which there are NAAQS that may be affected by the Project's emissions, and the corresponding NAAQS.

Table 8-2 Maximum background concentrations and NAAQS

NAAQS pollutant & averaging time	Background Concentration, µg/m^3	NAAQS, µg/m^3
CO, 1-hr	3,680	40,000 (35 ppm)
CO, 8-hr	1,840	10,000 (9 ppm)
NO_2, 1-hr	77.1	188 (100 ppb)
NO_2, annual	28.2	100 (53 ppb)
PM_{10}, 24-hr	86	150
$PM_{2.5}$, 24-hr	16.3	35
$PM_{2.5}$, annual	7.6	15

Note: The $PM_{2.5}$ 24-hr value is 98th percentile rather than maximum

8.3 Modeling Methodology for Class II areas

The applicant modeled the impact of PHPP on the NAAQS and PSD Class II increments using AERMOD in accordance with EPA's GAQM (Appendix W of 40 CFR Part 51). The modeling analyses included the maximum air quality impacts during startups and shut-downs, as well as a variety of conditions to determine worst-case short-term air impacts.

8.3.1 Model selection

As discussed in the modeling protocol (Class II Modeling Protocol sec. 2, p.2-1 pdf.6; also PSD Application p.6-1 pdf.46), the model that the applicant selected for analyzing air quality impacts in Class II areas is AERMOD, along with AERMAP for terrain processing and AERMET for meteorological data processing. This accords with the default recommendations in EPA's GAQM, section 4.2.2 on Refined Analytical Techniques.

8.3.2 Meteorology model inputs

AERMOD requires representative meteorological data in order to accurately simulate air quality impacts. For surface air data, PHPP selected 2002-2004 data from the Palmdale Regional Airport. Other nearby meteorological sites were examined, but the Palmdale Airport had better data completeness, is the closest, and has the same surface characteristics as the Project site. It is at or barely below 90% completeness for every quarter; it is within 2 miles, just on the other side of the airport's airstrip; and it is on flat, desert scrub land, with no intervening high ground between the Project and the meteorological tower (Class II Modeling Protocol p.2-4 pdf.9 and Figure 2-2, p.2-5 pdf.10).

The applicant made additional comparisons of land surface characteristics of the Project and meteorological sites, in terms of surface roughness in each radial direction, concluding that because of the sites' proximity and essentially identical characteristics, the Palmdale Airport data should be considered "site specific" (or "on-site") data (NO2 Memo #2 p.9ff pdf.9). Normally GAQM would require 5 years of airport data for modeling, but if on-site data is used, then a single year or those years available, may be used (GAMQ 8.3.3.2). In this case, additional data were available for 2005-2006, but the corresponding upper air data had a substantial amount of missing data (NO2 Memo #2 p.10 pdf.10). In any case, the wind roses for the various years are virtually indistinguishable, evidence that the 2002-2004 data are adequately representative of the meteorological conditions at the site. EPA believes that the chosen 2002-2004 Palmdale Regional Airport data is amply representative for the PHPP analysis.

For upper air data, the applicant selected Mercury Desert Rock Airport in Mercury, Nevada, as being the most representative site available that had data complete enough to use (Class II Modeling Protocol p.2-4 pdf.9). PHPP later elaborated on the representativeness of the Mercury Desert Rock Airport Data, noting that Vandenberg AFB in Lompoc, CA and the Marine Corps Air Station in Miramar, CA, near San Diego are near the ocean and have a very different climate than the high-altitude, desert Palmdale location (NO2 Memo #1 p.2ff pdf.2). EPA agrees that it is appropriate to use the Mercury Desert Rock Airport upper air data for the PHPP analysis.

8.3.3 Land characteristics model inputs

Land characteristics are used in the AERMOD modeling system in three ways: 1) via elevation within AERMOD to assess plume interaction with the ground; 2) via a choice of rural versus urban algorithm within AERMOD; and 3) via specific values of AERMET parameters that affect turbulence and dispersion, namely surface roughness, Bowen ratio, and albedo.

The applicant used terrain elevations from United States Geological Survey (USGS) Digital Elevation Model (DEM) data for receptor heights for AERMOD, which uses them to assess plume distance from the ground for each receptor. The elevations were also used within the AERMAP preprocessor to determine hill height scales for each receptor, used by AERMOD to

determine whether the plume goes over or around the hill.

For rural versus urban algorithm within AERMOD, the applicant classified land use within 3 km of the project using the 12-category Auer procedure, one of the methods recommended by EPA (GAQM 7.2.3(c)). Since desert scrub land is more than 50% of the area, it is classified as "rural" for choosing dispersion algorithms within AERMOD (Class II Modeling Protocol p.2-2 pdf.7, and Figure 2-1, p.2-3 pdf.8).

The applicant followed EPA's "AERMOD Implementation Guide" (2008 version) in using EPA's AERSURFACE processor with the National Land Cover Data 1992 archive to determine surface characteristics for AERMET (Class II Modeling Protocol p.2-9 to 2-14 pdf.14 to 19). A 2005 satellite image shows no significant change in land use since the 1992 data was compiled, so it remains appropriate. Land use cover categories were translated by AERSURFACE into monthly parameter values used in AERMET's stage 3 input files. The AERSURFACE determination of surface roughness length used land cover in 2 radial sectors, desert scrub and the airport's airstrip, which appears reasonable. The Bowen ratio (ratio of sensible to latent heating, i.e., direct temperature change versus air heating via evaporation), and albedo (reflection coefficient) affect heat-driven turbulence and dispersion under daytime convective conditions. Seasonal Bowen ratio for the surrounding 10x10 km area was estimated by AERSURFACE using three surface moisture categories and the amount of precipitation relative to the 30-year climatological record. Seasonal albedo was also supplied by AERSURFACE for the 10x10 km area based on land cover.

All of these are the standard EPA-recommended procedures for AERMOD inputs.

8.3.4 Model receptors

Model receptors are chosen geographic locations at which the model estimates concentrations. The receptors should have good area coverage and be closely spaced enough so that the maximum model concentrations are be found. At larger distances, spacing between receptors may be greater than it is close to the source since concentrations vary less with increasing distance. The spatial extent of the receptors is limited by the applicable range of the model (roughly 50 km for AERMOD), and possibly by knowledge of the distance at which impacts fall to negligible levels. Receptors need be placed only in ambient air, that is, locations to which the public has access, and not inside the project fence line. In addition, to avoid overly conservative estimates when multiple sources are being modeled, separate modeling runs may be needed for different subsets of receptors, so that a given source's emissions are not counted toward concentrations within its own fence line.

The applicant used receptors every 50 m along the project fence line, together with a Cartesian grid (rectangular array) of receptors, starting with 100 m spacing out to 3 km distant, and with progressively larger spacing, with 1000 m spacing between 10 and 20 km distant (PSD Application p.6-3 pdf.48). The applicant supplied a rationale for limiting the grid extent to 20 km, as opposed to 50 km. It found that short-term impacts were caused mainly by the ancillary

equipment, such as the emergency generator, rather than the main combustion turbines, and that maximum impacts were on the fence line or within 100 m, and likely driven by downwash effects. The applicant conducted additional modeling to compare distance impacts to those within the 20 km grid, and found that the maximum impacts within 20 km are 2 to 50 times higher than those outside, depending on averaging time (Supplemental Information p.6-1 pdf.41). EPA agrees that the receptor spacing and 20 km spatial extent are adequate for analysis of PHPP impacts.

8.3.5 Load screening and stack parameter model inputs

The applicant performed initial "load screening" modeling, in which a variety of source operating loads and ambient temperatures were modeled, to determine the worst case stack parameter scenario for use in the rest of the modeling. It modeled 100% load, 100% with duct burners operating, 75% load, and 50% load. For annual averages, it used 100% load with a conservatively low temperature of 64°F (lower than actual annual average). (PSD Application Table 6-3, p.6-4 pdf.49) The choice of "worst case" is different for each pollutant, since different pollutants' emissions respond differently to temperature and flow rate. Worst case for CO and NO_2 was 100% with duct burners operating; for PM_{10} and $PM_{2.5}$ it was 50% load (PSD Application p.6-6 pdf.51). The corresponding stack parameters were used in the remainder of the modeling to provide conservative estimates of PHPP impacts.

Table 8-3: Load screening and stack parameters

Parameter		Value				
		North Stack			South Stack	
UTM Coordinate East (m) [1]		398680.2			398679.8	
UTM Coordinate North (m) [1]		3833520.8			3833479.7	
Stack Base Elevation (ft)		2,517			2,517	
Stack Height (ft)		145			145	
Stack Diameter (inches)		216			216	
		Load				
		100% w/DB	100%	75%	50%	Annual Avg.[2]
Exit Temperature (°F)		172.9	176.5	166.7	166.9	174.1
Exit Velocity (ft/sec)		62.01	61.98	46.26	39.7	64.9
Pollutant Emissions Per Combustion Turbine (lb/hr)	NO_X	16.60	13.47	10.97	8.73	13.0
	CO	15.16	8.20	6.68	5.31	28.8
	PM10/PM2.5	18	12	12	12	13.4

[1] Coordinates for UTM Zone 11 referenced to Datum NAD27.

[2] Annual average emissions include normal operations as well as startup/shutdown. Exit temperature and velocity are the 100 percent load case at 64°F.

Notes:

m = meters

Ft. = feet

Source: PSD Application Table 6-3, p.6-4 pdf.49

8.3.6 Good Engineering Practice (GEP) Analysis

The applicant performed a Good Engineering Practice (GEP) stack height analysis, to ensure a) that downwash is properly considered in the modeling for stacks less than GEP height, and b) that stack heights used as inputs to the modeling are no greater than GEP height, so as to disallow artificial dispersion from the use of overly tall stacks. As is typical, the GEP analysis was performed with EPA's BPIP (Building Profile Input Program) software, which uses building dimensions and stack heights. The analysis found that GEP stack height for the main combustion turbines was 83.8 m, greater than the planned actual height of 44.2 m. GEP stack height for the other equipment was similarly greater than the planned heights. So, for all emitting units, the AERMOD modeling used the planned actual stack heights, and included wind direction-specific Equivalent Building Dimensions to properly account for downwash. (PSD Application p.6-5 pdf.50)

8.4 *National Ambient Air Quality Standards and PSD Class II Increment Consumption Analysis*

8.4.1 Pollutants with significant emissions

An air quality impact analysis is required for each PSD-regulated pollutant (for which there is a NAAQS) that is emitted in a significant amount, *i.e.*, an amount greater than the Significant Emission Rate for the pollutant. Applicable PHPP emissions and the Significant Emission Rates are shown in Table 8-4 (derived from PSD Application Table 1-1, p.8 pdf.8). PHPP emissions of SO_2 are not significant. However, PHPP emits significant amounts of CO, NO_X, PM_{10}, and $PM_{2.5}$, so air impact analyses are required for CO, NO_2, PM_{10}, and $PM_{2.5}$.

Table 8-4: PSD Applicability to PHPP: Pollutants Emitted in Significant Amounts

Criteria Pollutant	PHPP Emissions, tons/year	Significant Emission Rate, tons/year	PSD applicable?
CO	254.6	100	Yes
NO_X	114.9	40	Yes
PM_{10}	131.8	15	Yes
$PM_{2.5}$	125.3	10	Yes
SO_2	8.9	40	No

Source: PSD Application Table 1-1, p.8 pdf.8

8.4.2 Preliminary analysis: Project-only impacts

EPA has established Significant Impact Levels (SILs) to characterize air quality impacts. A SIL is the ambient concentration resulting from the facility's emissions, for a given pollutant and averaging period, below which the source is assumed to have an insignificant impact. For maximum modeled concentrations below the SIL, no further air quality analysis is required for the pollutant. For maximum concentrations that exceed the SIL, a cumulative modeling analysis, which incorporates the combined impact of nearby sources of air pollution, is required to determine compliance with the NAAQS and PSD increments.

The results of the preliminary or Project-only analysis are shown in Table 8-5. PHPP impacts are significant for 1-hour NO_2, 24-hour PM_{10}, 24-hour $PM_{2.5}$, and annual $PM_{2.5}$, so cumulative impact analyses are required for these pollutants.

Table 8-5: PHPP Significant Impacts, Normal Operations

NAAQS pollutant & averaging time	Project-only Modeled Impact	Significant Impact Level (SIL), $\mu g/m^3$	Project impact significant?
CO, 1-hr	369.6	2000	No
CO, 8-hr	20.4	500	No
NO_2, 1-hr	106.9	7.5 (4 ppb)	Yes

NO_2, annual	0.98	1	No
PM_{10}, 24-hr	12.7	5	Yes
$PM_{2.5}$, 24-hr	12.57	1.2	Yes
$PM_{2.5}$, annual	1.2	0.3	Yes

Sources:
Impacts (except for 1-hr NO_2 and $PM_{2.5}$): PSD Application p.6-7 pdf.52
NO_2 1-hr: Supplemental Information p3-2. pdf.22
PM_{10}: PSD Application Table 6-7, p.6-8 pdf.53
$PM_{2.5}$: Updated Analyses Memo Table 9, p.15 pdf.15

8.4.3 Cumulative impact analysis

A cumulative impact analysis includes nearby sources in addition to the Project itself. For demonstrating compliance with the PSD increment, only increment-consuming sources need be included, since the increment concerns only changes occurring since the applicable baseline date. However, a conservative and sometimes easier approach is simply to model all nearby sources; this was the approach taken by PHPP. For demonstrating compliance with the NAAQS, a background concentration is added to represent those sources not explicitly included in the modeling, so that the total accounts for all contribution to current air quality.

8.4.3.1 Nearby source emission inventory

For both the PSD increment and NAAQS analyses, there may be a large number of sources that could potentially be included, so judgement must be applied to exclude small and/or distant sources that have only a negligible contribution to total concentrations. Only sources with a significant concentration gradient in the vicinity of the source need be included; the number of such sources is expected to be small except in unusual situations. (GAQM 8.2.3)

The applicant identified two sources nearby for inclusion in the emission inventory for the cumulative analysis, based on discussions with the Antelope Valley Air Quality Management District (District) (PSD Application p.6-7 pdf.52). These are Lockheed Martin Aeronautics and Northrop Grumman, both within or adjacent to U.S. Air Force Plant 42 near the Palmdale airport. These sources had a large number of individual emitting sources (284), most of which had very low emissions. For practicality of modeling some of these were combined in a conservative way: emitters with less than 5% of total had their emissions added to the largest emitters.

In support of limiting the inventory to these sources, the applicant quoted a statement from Mr. Chris Anderson, Air Quality Engineer, and Mr. Alan De Salvio, Supervisor of Air Quality Engineering, of the District: "Minor facilities located within the 6 mile radius are expected to be included in the background monitored at the AVAQMD [District] air monitoring station which is located in close proximity (approximately within 2 miles) of the PHPP site." (NO2 Memo #2 p.11 pdf.11)

The applicant also documented discussions with the District, Mojave Desert Air Quality

Management District (AQMD), Kern County Air Pollution Control District, and South Coast AQMD showing that there are few substantial $PM_{2.5}$ sources nearby; however, Granite Rock Construction and Robertson's Ready Mix were included in the modeling, both about 15 km (9 miles) from PHPP (Supplemental Information p.2-1 to 2-2 pdf.9 to 10, and Figure 2-1 p.2-3 pdf.11).

Also, recent EPA NO_2 guidance clarification states that the nearby source inventory "should focus on the area within about 10 kilometers of the project location", which suggests that the PHPP inventory is adequate for NO_2 analyses (p.16 of "Additional Clarification Regarding Application of Appendix W Modeling Guidance for the 1-hour NO_2 National Ambient Air Quality Standard", Memorandum from Tyler Fox, EPA Air Quality Modeling Group to EPA Regional Air Division Directors, March 1, 2011).

Nevertheless, the applicant also performed a "Q/D" analysis, which provides another factor for consideration in determining whether sources with small emissions (Q) and/or at large distances (D) would be reasonable to exclude from the analysis. The applicant proposed that sources with a km distance greater than the NO_X emissions in tons per year divided by 20 would be eligible for exclusion. (Updated Analyses Memo p.6 pdf.6, citing "Screening Method for PSD" developed by the North Carolina Air Quality Section of the North Carolina Department of Natural Resources, in file "NC 20D Letter to EPA.pdf"). The only sources to pass this initial screen were those within US Air Force Plant 42, already included in the cumulative modeling, and Bolthouse Farm emissions. In addition to being mostly downwind (east) of the project, the emissions of Bolthouse Farm are widely distributed throughout the area, and therefore are dispersed enough that they would have a negligible contribution to maximum concentrations (Updated Analyses Memo p.8 pdf.8). The Q/D analysis provides additional evidence that the source inventory is adequate for the cumulative impact analysis.

EPA believes that the combination of a conservative background monitored concentration expected to include the effect of most nearby sources, EPA guidance clarification focusing on sources within 10 km, and the Q/D analysis are sufficient justification for the inventory used in the cumulative analysis.

8.4.3.2 PM2.5-specific issues

The applicant originally relied on the PM_{10} NAAQS as a surrogate for the $PM_{2.5}$ NAAQS, which was allowed under previous EPA policy. However, EPA repealed this policy (proposed February 11, 2010; final May 18, 2011), so that $PM_{2.5}$ itself must be modeled. EPA also issued guidance clarification on how to combine modeled results with monitored background concentrations ("Modeling Procedures for Demonstrating Compliance with $PM_{2.5}$ NAAQS", memorandum from Stephen D. Page, Director, EPA OAQPS, March 23, 2010).

Accordingly, the applicant replaced the original analysis with a new cumulative $PM_{2.5}$ analysis. The applicant still conservatively used PM_{10} emissions as input to the modeling, so actual $PM_{2.5}$ impacts may be lower than those indicated in the model results. Maximum model results were

correctly added to the ninety-eighth percentile of the monitored background concentration, as called for in the EPA guidance clarification. (Updated Analyses Memo p.12ff pdf.12)

The PHPP application has little discussion of secondarily formed $PM_{2.5}$ (as distinguished from directly emitted primary $PM_{2.5}$). However, the applicant does cite an earlier AECOM analysis showing that that near the source, primary $PM_{2.5}$ emissions dominate the modeled impacts (Supplemental Information, p.2-10 pdf. 18). EPA notes that, due to the time needed for chemical formation, secondary $PM_{2.5}$ impacts are likely to occur much farther downwind than the significant primary impacts, which occur within 400 m of the project (Updated Analyses Memo p.12 pdf.12), and so are likely to be small and not overlapping with the impacts estimated in the application.

8.4.3.3 NO_2-specific issues

The applicant used the Ozone Limiting Method (OLM) option in AERMOD, in which ambient ozone concentrations limit the amount of emitted NO that is converted to NO_2 (after an initial 10% conversion). In addition to requiring monitored ozone, the method requires specification of an in-stack NO_2/NO_X ratio. EPA believes the OLM method is justified in this area because while it has substantial ozone, most of that is due to transport from outside the area, rather than to photochemistry operating on VOC and NO_X emiossions from sources within the area. Therefore, the alternative mechanisms for conversion of NO to NO_2 by the hydroxyl and peroxy radicals are likely to be less important than the ozone conversion mechanism, and so the conversion is ozone-limited.

A. In-stack NO_2/NO_X ratio

The applicant notes that since the Project would be located in an ozone nonattainment area, ozone concentrations are generally high, so that the initial in-stack NO_2/NO_X ratio is of less importance than would otherwise be the case, since plentiful ozone is available to convert NO to NO_2 (NO2 Memo #2 p.3 pdf.3).

GE Power and Water, the vendor of the GE7FA turbines planned for PHPP, provided an in-stack NO_2/NO_X ratio of 0.10 to 0.15 based on its review of available NO_2 emission data; the Selective Catalytic Reduction (SCR) planned for PHPP would make this ratio even lower (NO2 Memo #1 p.8 pdf.8; NO2 Memo #2 p.3 pdf.3). Since little data is available for the ratio during startup and shutdown conditions, the applicant relied on a 0.4 ratio as recommended by the San Diego County Air Pollution Control District for a project with similar turbines, despite some evidence that the actual ratio could be lower for both startup and shutdown events. The short duration of these events implies that that actual ratio would be closer to the 0.10 used for normal operations (NO2 Memo #1 p.9 pdf.9).

B. NO_2 monitor representativeness/conservativeness

As mentioned above, the applicant chose the Lancaster Division Street monitor for background NO_2 concentrations. This monitor is just 2.5 miles from the PHPP power block, and is near the Sierra Highway (110 m), the Antelope Valley Freeway (SR-14) (4 km), commute traffic on Division Street (50 m), and the Southern Pacific Railway (80 m). EPA agrees with PHPP that this location is quite conservative for providing NO_2 background concentrations.

C. O_3 background monitor representativeness

The applicant notes that since O_3 is a regionally formed pollutant, the nearness of the monitoring site to the project is the most important criterion for representativeness (NO2 Memo #1 p.10 pdf.10). The Lancaster Division Street monitor is just 2.5 miles away from the PHPP power block, and EPA agrees that it is adequately representative.

D. Missing O_3 data procedure

The applicant filled in missing ozone data using a procedure to ensure that NO to NO_2 conversion is not underestimated. When 1 or 2 hours are missing, the higher of the two endpoints are used for the missing hours. When 3 or more hours are missing, the higher of the two end points and of the corresponding hours from the two neighboring days are used for the missing hours. (NO2 Memo #2 p.8 pdf.8) Under this procedure, professional judgement is applied to ensure that the data from the neighboring days are not anomalously low.

The applicant provided an example of the application of this procedure (Updated Analyses Memo p.3 to 4 pdf.3 to 4), as well as details of the full calculations (file "PHPP Ozone Filling Analysis.xlsx" from July 2011).

EPA believes that the applicant followed a reasonable and conservative procedure for filling in missing ozone values.

E. Combining modeled and monitored values

Originally, the applicant combined each modeled concentration with the background concentration from the corresponding hour ("hour-by-hour" approach). The applicant later switched to a variant of EPA's March 2011 memo's[43] "first tier" approach: it used the 98th percentile of all monitored values, though only for model receptors outside the USAF Plant 42 boundary; the hour-by-hour approach still applied to other receptors. (The EPA March 2011 memo's "first-tier" approach uses the 98th percentile from among only the daily maxima, whereas

---

43 "Additional Clarification Regarding Application of Appendix W Modeling Guidance for the 1-hour NO2 National Ambient Air Quality Standard", Memorandum from Tyler Fox, EPA Air Quality Modeling Group to EPA Regional Air Division Directors, March 1, 2011. http://www.epa.gov/ttn/scram/Additional_Clarifications_AppendixW_Hourly-NO2-NAAQS_FINAL_03-01-2011.pdf

the applicant's variant uses the 98th percentile from among all hourly values.) While the applicant's approach is less conservative than EPA's first-tier approach, we believe that it remains conservative given the very conservative background monitor that is being used (NO2 Background Memo). The maximum values coincide with morning and evening commute traffic, due to the several roads near the monitor.

A key concern expressed in EPA's March 2011 memo about the hour-by-hour approach is that it implicitly assumes concentrations are spatially uniform, *i.e.*, that the background monitor is representative of all locations[44]. Since this is not generally true, some degree of temporal conservativeness is warranted, as in the memo-recommended 98th-percentile of the available background concentrations by season and hour-of-day. However, for PHPP, the background monitor appears to be very conservative, so that the implicit spatial uniformity assumption of the hour-by-hour approach is actually a conservative assumption in this case. If the memo-recommended procedure were to be used in this case, then a single unusually high morning commute hourly concentration would be assumed to apply to every day of the season; a single NO_2 exceedance would then become 90 exceedances, thus possibly causing an erroneous prediction of a 1-hour NO_2 violation, an overly conservative approach.

In addition, the applicant's modeling included some intermittent sources (PHPP's emergency generators) that may not need to be included, per EPA's March 2011 memo[45] on hourly NO_2 modeling, further adding to the conservativeness of the analysis.

EPA believes that the applicant's overall approach to the 1-hour NO_2 analysis for the PHPP, including the emission inventory, background concentrations of NO_2 and O_3, and method for combining model results with monitored values, is adequately conservative.

8.4.3.4 Results of the cumulative impacts analysis

The results of the PSD cumulative impacts analysis for PHPP's normal operations is shown in Table 8-6. The analysis demonstrates that emissions from PHPP during normal operations will not cause or contribute to exceedances of the NAAQS for 1-hour NO_2, 24-hour PM_{10}, 24-hour $PM_{2.5}$, or annual $PM_{2.5}$ or applicable PSD increments. As discussed above, PHPP's maximum modeled concentrations are below the SILs for annual NO_2, 1-hour CO, and 8-hour CO; therefore, a cumulative impacts analysis was not required to demonstrate compliance for these pollutants/averaging times.

44 *Ibid.*, p.21.
45 *Ibid.*, p.10.

Table 8-6: PHPP Compliance with PSD Increments and NAAQS, Normal Operations

NAAQS pollutant & averaging time	All Sources Modeled Impact	PSD Increment	Background Concentration	Cumulative impact w/ background	NAAQS
NO_2, 1-hr; USAF	106.9	NA	(hourly)	175.3	188 (100 ppb)
NO_2, 1-hr; other	108.2	NA	77.1	185.3	188 (100 ppb)
PM_{10}, 24-hr	12.9	30	86	98.9	150
$PM_{2.5}$, 24-hr	12.58	NA	16.3	28.9	35
$PM_{2.5}$, annual	1.3	NA	7.6	8.9	15

Notes:

- "USAF" values are for receptors within USAF Plant 42; "other" is for receptors elsewhere; USAF Plant 42 receptors are not ambient air with respect to its own emissions.
- Background concentrations for USAF receptors were added hour-by-hour to modeled concentrations before computing 98th percentile total impact, rather than a single background value being added to the modeled impact as for the other cases.

Sources:

NO_2 USAF: Supplemental Information p3-2. pdf.22

NO_2 other: Updated Analyses Memo Table 7, p.11 pdf.11, "Normal Operations - No PHPP Fire Water Pump"

PM_{10}: PSD Application Table 6-7, p.6-8 pdf.53

$PM_{2.5}$: Updated Analyses Memo Table 9, p.15 pdf.15

8.4.3.5 Startup and shutdown analyses

Combustion turbine CO and NO_X emissions during startup and shutdown (SU/SD) are estimated to be substantially higher than during normal operations, and thus the applicant also modeled for shutdown, the condition having the highest emissions. Modeled stack parameters such as exit temperature and exhaust velocity were consistent with a 20% operating load; the ambient temperature used represented worst-case meteorological conditions, emission into a cool morning stable layer. Since shutdown duration may not exceed half an hour, worst case hourly emissions consist of a half-hour of normal operations followed by a shutdown event. For CO, this is 1/2 of 15.16 lb/hr, plus 337 lb, for a combined rate of 344.6 lb/hr per turbine (PSD Application p.6-9 pdf.54). For NO_X, this is 1/2 of 16.6 lb/hr, plus 57 lb, for a combined rate of 65.3 lb/hr per turbine (Updated Analyses Memo Table 7, p.11 pdf.11). Emergency generator testing was not included in the NO_X modeling, since it would not be undergoing testing during source shutdown. This 1-hour NO_2 analysis continues to use the conservative assumptions discussed above for the analysis of normal operations. The model results are shown in Table 8-7 for the preliminary or Project-only analysis, and in Table 8-8 for the cumulative impacts analysis. The results demonstrate that emissions from PHPP will comply with the 1-hour NO_2 NAAQS and both the 1-hour and 8-hour CO NAAQS under shutdown conditions (and therefore for startup conditions, for which emissions are lower). We note that the applicant was not required to, and did not, perform a cumulative impact analysis for CO, as its emissions are below the SILs; however, for informational purposes, Project impacts were added to background concentrations of CO for a rough comparison to the NAAQS.

Table 8-7: PHPP Significant Impacts, Startup/Shutdown

NAAQS pollutant & averaging time	Project-only Modeled Impact	Significant Impact Level (SIL), $\mu g/m^3$	Project significant impact?
CO, 1-hr	674.6	2000	No
CO, 8-hr	489.1	500	No
NO2, 1-hr	136.4	7.5 (4 ppb)	Yes

Sources:
CO: PSD Application Table 6-9, p.6-9 pdf.54
NO2 1-hr: Supplemental Information p3-3. pdf.23

Table 8-8: PHPP Compliance with NAAQS, Startup/Shutdown

NAAQS pollutant & averaging time	Project-only Modeled impact	All Sources Modeled Impact	Background Concentration	Cumulative impact w/ background	NAAQS
CO, 1-hr	674.6	NA	3,680	4,354.6	40,000 (35 ppm)
CO, 8-hr	489.1	NA	1,840	2,329.1	10,000 (9 ppm)
NO_2, 1-hr; USAF	(not modeled)	136.4	(hourly)	180.3	188 (100 ppb)
NO_2, 1-hr; other	(not modeled)	109.7	77.1	186.9	188 (100 ppb)

Notes:
- There are no PSD increments defined for CO or for 1-hour NO_2.
- PHPP emissions are not significant for CO, so no cumulative analysis is required; "cumulative impact" here is PHPP-only plus background.
- "USAF" values are for receptors within USAF Plant 42; "other" is for receptors elsewhere; USAF Plant 42 receptors are not ambient air with respect to its own emissions. Project-only impacts were not modeled for 1-hour NO2 startup/shutdown, rather only the full cumulative impact was modeled.
- Background concentrations for USAF receptors were added hour-by-hour to modeled concentrations before computing 98th percentile total impact, rather than a single background value being added to the modeled impact as for the other cases."Project-only" and "all sources" are the same except for 1-hr NO_2 "other" receptors.

Sources:
CO: PSD Application Table 6-9, p.6-9 pdf.54; Project-only plus background
NO_2 USAF: Supplemental Information p3-3. pdf.23
NO_2 other: Updated Analyses Memo Table 7, p.11 pdf.11, "Startup/Shutdown - No PHPP Emergency generator"

8.5 Class I Area Analysis

The Class I area analysis was performed using CALPUFF Version 5.8 for long range transport, which required additional detailed meteorological data as explained in the applicant's Class I Modeling Protocol. Additionally, the applicant used CALPUFF to assess PSD Class I increment consumption, regional haze, and acid deposition. The Class I modeling protocol was provided to the Federal Land Managers (FLMs) for the two relevant Class I areas, the Cucamonga and the San Gabriel Wilderness Areas. The FLMs raised no objections to the protocol or the modeling

itself.

8.5.1 Class I Increment Consumption Analysis

The results of the PHPP Class I increment analysis are shown in Table 8-9; for the PSD pollutants for which there are applicable increments, PHPP impacts are less than the Class I Significant Impact Levels (SILs), and therefore the applicant has demonstrated that the Project will not cause or contribute to any Class I PSD increment violation.

Table 8-9: PHPP Class I Increment Impacts

Class I Area	Pollutant and averaging time	Project Impact, $\mu g/m^3$	Significant Impact Level, $\mu g/m^3$	Class I PSD Increment, $\mu g/m^3$
Cucamonga Wilderness Area	NO_2, annual	0.0010	0.1	2.5
	PM_{10}, 24-hr	0.059	0.3	8
	PM_{10}, annual	0.003	0.2	4
San Gabriel Wilderness Area	NO_2, annual	0.0017	0.1	2.5
	PM_{10}, 24-hr	0.122	0.3	8
	PM_{10}, annual	0.004	0.2	4

Source: PSD Application, Table 6-10, p.6-11 pdf.56

8.5.2 Visibility and Deposition in Class I areas

The PSD regulations at 40 C.F.R. section 52.21 require that PSD permit applicants address potential impairment to visibility (e.g., regional haze, plume blight) for Class I areas. The deposition of nitrogen is another potential concern due to potential effects on soils, vegetation, and other biological resources.

For Cucamonga Wilderness Area (WA), which is located greater than 50 km from the Project, a Class I regional haze analysis was conducted. The modeling considered the two CTGs' emissions of H_2SO_4, NO_X, PM_{10}, $PM_{2.5}$, and SO_2. The applicant used CALPUFF to predict visibility impacts at Class I areas. Visibility impacts are assessed using the extinction coefficient (b_{ext}), which represents the scattering of light by air pollutants, which appears as haze that reduces visibility. The results of the CALPUFF modeling for the three meteorology years (2001-2003) are shown in Table 8-10 and indicate that changes in light extinction (b_{ext}), averaged over a 24-hour period, at Cucamonga WA is predicted to be below the 5% change threshold[46].

[46] "Federal Land Managers' Air Quality Related Values Workgroup (FLAG) Phase I Report" (December 2000), U.S. Forest Service, National Park Service, U.S. Fish And Wildlife Service. http://www2.nature.nps.gov/air/Permits/flag/

Table 8.10: Class I Area Regional Haze CALPUFF Modeling Results

Class I Area	Maximum Predicted % Change in b_{ext}			Significance Threshold (%)
	2001	2002	2003	
Cucamonga WA	1.77	2.14	1.92	5

Applicants are not required to perform a cumulative effects analysis of new source growth if the visibility impact of their proposed source is less than 5%. Based on the Class I regional haze results, emissions from the facility are not expected to have an adverse impact on visibility in the Cucamonga WA.

For San Gabriel WA, which is within 50 km of the Project, the impact of the Project on visibility impairment, also known as plume blight, was assessed. The EPA VISCREEN screening model was used to estimate visibility impairment to the San Gabriel WA from the CTG emissions. Effects of plume blight are assessed as changes in plume perceptibility (ΔE) and plume contrast (C_p) for sky and terrain backgrounds. A Level 1 analysis, using default meteorological data and no site-specific conditions, was conducted. Because the Level 1 results of ΔE and C_p were above the screening thresholds, a Level 2 analysis was conducted. A detailed discussion of the VISCREEN plume blight impact analysis is presented in Section 6.2.4 of the applicant's PSD permit application.

The results of the VISCREEN modeling runs are presented in Tables 8-11 and 8-12. The VISCREEN results are presented for the two default worst-case theta angles – theta equal to 10 degrees representing the sun being in front of an observer, and theta equal to 140 degrees representing the sun being behind the observer. A negative plume contrast means the plume has a darker contrast than the background sky.

Table 8-11a: Class I VISCREEN Modeling Results of Changes in Plume Perceptibility (ΔE)

Background	Distance	Plume Perceptibility (ΔE)		
		Theta 10	Theta 140	Criteria
Sky	47.4	0.135	0.261	2.00
Terrain	34.6	0.806	0.072	2.00

Table 8-11b: Class I VISCREEN Modeling Results of Changes in Plume Contrast (C_p)

Background	Distance	Plume Contrast (C_p)		
		Theta 10	Theta 140	Criteria
Sky	47.4	0.001	-0.009	0.05
Terrain	34.6	0.005	0.001	0.05

The results from the VISCREEN model show that changes in plume perceptibility and plume contrast for sky and terrain backgrounds are below the criteria thresholds. Therefore, the plume would not be perceptible against a sky or terrain background.

For Cucamonga WA and San Gabriel WA, a deposition analysis was conducted for nitrogen compounds which considered Project emissions of NO_X and conversion of NO_X to nitrate and nitric acid. The results from the deposition analysis are presented in Table 8-12.

Table 8-12: Class I Nitrogen Deposition CALPUFF Modeling Results

Class I Area	Maximum Predicted Nitrogen Deposition – Annual average (g/ha/yr)			Deposition Analysis Threshold (g/ha/yr)
	2001	2002	2003	
Cucamonga WA	0.496	0.521	0.458	5
San Gabriel WA	0.718	0.396	0.607	5

The Deposition Analysis Threshold was established by the Federal Land Managers, and represents a level below which deposition is deemed to have no adverse effect, and does not require further analysis.[47] The maximum deposition rates modeled for PHPP are below the Class I Area Nitrogen Deposition Analysis Threshold of 0.005 kilograms per hectares per year, or below 5 grams per hectare per year (g/ha/yr), and therefore no further deposition analysis is necessary.

9. Additional Impact Analysis

In addition to assessing the ambient air quality impacts expected from a proposed new source, the PSD regulations require that EPA evaluate other potential impacts on 1) soils and vegetation; 2) growth; and 3) visibility impairment. 40 C.F.R. § 52.21(o). The depth of the analysis generally depends on existing air quality, the quantity of emissions, and the

47 "Guidance on Nitrogen and Sulfur Deposition Analysis Thresholds", Attachment to Letter from Christine L. Shaver, National Park Service and Sandra V. Silva, U.S. Fish and Wildlife Service to S. William Becker, STAPPA/ALAPCO, January 3, 2002 (files DatNotifyLetter.pdf, nsDATGuidance.pdf) http://www.nature.nps.gov/air/Permits/flag/

sensitivity of local soils, vegetation, and visibility in the source's impact area.

9.1 Soils and Vegetation

For the soils and vegetation analysis, the applicant considered as part of the impact area the 400 meter significant impact area considered in the initial PSD application for the Project. In the applicant's July 2010 supplement (Section 5.0), the applicant provided additional information on the vegetation and soils inventory in the project area, a discussion of the potential impacts to those soils and vegetation types with respect to the five Class II areas (within 50 km of the project) discussed in Section 9.2, Visibility Impairment, and a discussion of nitrogen deposition. Also, the applicant noted there are no federal habitat areas of concern within 20 miles of the PHPP.

For most types of soils and vegetation, ambient concentrations of criteria pollutants below the secondary NAAQS will not result in harmful effects because the secondary NAAQS are set to protect public welfare, including vegetation, crops, and animals. No harmful effects are expected from this project because the total estimated maximum ambient concentrations presented in Table 9-1 are below the primary NAAQS (listed in Table 8-1 of Section 8) and secondary NAAQS for NO_2 (100 $\mu g/m^3$) and $PM_{2.5}$ (35 $\mu g/m^3$ for 24-hour periods; and 15.0 $\mu g/m^3$ over an annual period). There are no secondary NAAQS for CO.

The initial application (dated March 2009) used EPA's "Screening Procedure for the Impacts of Air Pollution Sources on Plants, Soils and Animals" (1980)[48] to determine if maximum modeled ground-level concentrations of NO_2 and CO could have an impact on plants, soils, and animals. The modeled impacts of NO_2 and CO emissions from the facility, individually, and in addition to the background concentrations of NO_2 and CO, are below the minimum impact level for sensitive plants. The following table summarizes information in this regard from the PSD application (Table 6-17, Soils and Vegetation Analysis).

Table 9. 1
Project Maximum Concentrations and EPA Guidance Levels

Criteria Pollutant and Guidance Averaging Time	EPA Screening Concentration ($\mu g/m^3$)	Modeled Maximum Concentrations ($\mu g/m^3$)	Modeling Averaging time
NO_2 4-Hours	3,760	419.7	1 hour
NO_2 8-Hours	3,760	419.7	1 hour
NO_2 1-Month	564	419.7	1 hour
NO_2 Annual	94	29.2	Annual
CO Weekly	1,800,000	1,806.4	8 hour

[48] Screening Procedure for the Impacts of Air Pollution Sources on Plants, Soils, and Animals," EPA 450/2-81-078, December 1980.

As part of the July 2010 supplement regarding additional impacts to vegetation, the applicant also reviewed a document developed by the U.S. Department of Agriculture entitled "A Screening Procedure to Evaluate Air Pollution Effects in Region 1 Wilderness Areas" (1991). As a complement to the EPA 1980 screening procedure document, the applicant determined that for the NO_X "sensitive" species of alfalfa, which is found nearby the project, the modeled air concentrations (Table 9-1) demonstrate that the impacts are below the significance criteria.

The applicant also considered soil acidification and eutrophication as part of the July 2010 supplement regarding additional impacts on soil. Nitrogen deposition in soil can have beneficial effects to vegetation if they are lacking these elements; however, gaseous emissions impacts on soils at levels greater than vegetation requirements can cause acidic conditions to develop. Soil acidification and eutrophication can occur as a result of atmospheric deposition of nitrogen.

The applicant determined that project-specific modeling for nitrogen deposition was not warranted because the estimated nitrogen deposition rates were negligible as a plant growth influence and because the effects of deposition on eutrophication were insignificant, as described below.

When considering soil acidification, the applicant referred to the CALPUFF modeling conducted for the PHPP's Class I analysis. The applicant also referred to the nitrogen deposition modeling analysis (using CALPUFF) performed for a similar project, the Victorville 2 (VV2) Hybrid Power Project.[49] CALPUFF incorporates the atmospheric chemistry and chemical transformations to determine nitrogen deposition and provides results in units of kilograms per hectare per year, which can be converted to pounds per unit area. For the VV2 project, the modeled maximum annual deposition rate was considered to be very low.

The PHPP is nearly identical to the VV2 hybrid solar-gas plant, with the exception of a larger natural gas-fired auxiliary boiler; the PHPP boiler is 110 MMBtu/hr, while the VV2 boiler is 40 MMBtu/hr. Additionally, the predominant wind direction for PHPP is the northeast of the power block, which is similar to the predominant wind direction for VV2. (There have not been pertinent upgrades to the CALPUFF model since the VV2 2008 analysis.). Because of the similarities between the PHPP and VV2, and VV2's fence line deposition of 1.2 ounces of nitrogen per acre, the applicant determined that the nitrogen deposition rates for PHPP also would be considered negligible as a plant growth influence, and therefore no additional nitrogen deposition analysis was performed.

In sum, based on our consideration of the information and analysis provided by the applicant, we do not believe that emissions associated with the Project will result in adverse impacts on soils or vegetation.

---

49 EPA Region 9 issued the initial PSD permit to the Victorville 2 Hybrid Power Project in 2010. EPA proposed the PSD permit in 2008, with Docket I.D. number EPA-R09-OAR-2008-0406. (http://www.regulations.gov/#!docketDetail;D=EPA-R09-OAR-2008-0406). The initial PSD permit was issued in 2010 with Docket I.D. number EPA-R09-OAR-2008-0765 (http://www.regulations.gov/#!docketDetail;D=EPA-R09-OAR-2008-0765)

9.2 *Visibility Impairment*

Using procedures in EPA's Workbook for Plume Visual Impact Screening and Analysis[50], the applicant evaluated visibility impairment for one Class I area and five Class II areas. The five Class II areas included three state parks, one woodland, and one wilderness area.

In the initial PSD application, the applicant presented visibility impairment (e.g., plume blight) for the Class I area of San Gabriel Wilderness Area (see Section 8.5.2 of the application), which is located within 50 km of the proposed PHPP. The applicant provided supplemental application information for visibility impairment in July 2010 for five Class II areas identified as potentially sensitive state or federal parks, forests, monuments, or recreation areas within 50 km of the project. These five areas with their approximate closest distances to PHPP were:

- Antelope Valley Indian Museum State Park (23 km)
- Saddleback Butte State Park (26 km)
- Antelope Valley California Poppy State Reserve (26 km),
- Arthur B. Ripley Desert Woodland (37 km), and
- Sheep Mountain WA (43 km)

The applicant performed a Level 1 and Level 2 VISCREEN analysis for all five areas. The results of this analysis were below the significance criteria for three of the five areas. A further refinement in VISCREEN of plume perceptibility for the two exceptions – Saddleback Butte State Park and Antelope Valley Indian Museum State Park – was performed for the worst-case daytime meteorological conditions; the result is that the plume would not be perceptible at either site during daylight hours, based on low plume perceptibility and contrast predicted by VISCREEN.

Based on the VISCREEN results, w believe that the Project would not contribute to visibility impairment.

9.3 *Growth*

The growth component of the additional impact analysis considers an analysis of general commercial, residential, industrial and other growth associated with the PHPP. 40 C.F.R. § 52.21(o). The PHPP is expected to employ 36 employees, with an ample work force in the Southern California area to accommodate the PHPP estimated peak of 767 construction workers; impacts to the local population and housing needs are therefore expected to be minimal. Therefore, we do not expect this project to result in any significant growth.

The applicant provided growth-related information in its initial PSD application and in supplemental application materials submitted to EPA in July 2010 and July 2011. The July 2011 supplement includes Attachment A, which is an updated version of the socioeconomics analysis PHPP prepared for its July 2008 California Energy Commission (CEC) Application for

50 "Workbook for Plume Visual Impact Screening and Analysis (Revised)", EPA, EPA-454/R-92-023, 1992.

Certification (AFC). The applicant's original July 2008 CEC AFC socioeconomics analysis was based on 2000 Census data; Attachment A of the July 2011 supplement includes updated information based on the available 2010 Census data regarding population and population growth projections.

The applicant's initial PSD application growth analysis (Section 6.3.2) stated that "... no long-term growth is expected during project operations." A Project labor force of 36 employees was estimated. The July 2010 supplement further discussed the Project's potential growth-inducing activities. Additional details in this supplement included a summary of growth-inducing impacts associated with employment. The information submitted indicates that for the construction and operating phases of the Project, impacts to the population and housing needs are expected to be minimal, and are expected not to induce substantial population growth.

With regards to the question of whether the Project's power generation would induce growth, the applicant anticipates that the Project would likely displace the older once-through cooling facilities in the Southern California region that are expected to be retired in the future. Therefore, rather than induce growth, PHPP would supply energy to accommodate the existing demand and projected growth in the Southern California region.

In sum, based on our consideration of the information and analysis provided by the applicant, we do not expect the Project to result in any significant growth.

10. Endangered Species

Pursuant to section 7 of the Endangered Species Act (ESA), 16 U.S.C. 1536, and its implementing regulations at 50 C.F.R. Part 402, EPA is required to ensure that any action authorized, funded, or carried out by EPA is not likely to jeopardize the continued existence of any endangered or threatened species or result in the destruction or adverse modification of such species' designated critical habitat. EPA has determined that this PSD permitting action is subject to ESA section 7 requirements.

The applicant and EPA identified two federally-listed species,the desert tortoise *Gopherus agassizii*) and the arroyo toad (*Bufo californica*), that might be affected by the proposed PSD permitting action for the Project. In March 2009, a Draft Biological Assessment (BA) was submitted by the applicant to EPA and the U.S. Fish and Wildlife Service (FWS). Based on discussions between the applicant and FWS, in August 2009, the applicant submitted to EPA and FWS an Addendum to the BA. The BA Addendum further detailed that the PHPP "... may affect but is not likely to adversely affect the desert tortoise and will have no effect on the arroyo toad." In July 2011, the applicant submitted a second Addendum to the BA to EPA and FWS, outlining updates to the Project scope and a further analysis supporting the conclusion that the PHPP may affect, but is not likely to adversely affect, the federally-listed desert tortoise and will have no effect on the federally-listed arroyo toad.

In a letter dated August 5, 2011, EPA requested FWS's written concurrence with EPA's determination under ESA section 7 that the proposed PSD permit for the PHPP is not likely to adversely affect the desert tortoise or arroyo toad.

EPA will proceed with its final PSD permit decision after making a determination that issuance of the permit will be consistent with ESA requirements. In making this determination, EPA will consider actions taken, or to be taken, by the applicant to ensure ESA compliance.

11. Environmental Justice Analysis

Executive Order 12898, entitled "Federal Actions To Address Environmental Justice in Minority Populations and Low-Income Populations," states in relevant part that "each Federal agency shall make achieving environmental justice part of its mission by identifying and addressing, as appropriate, disproportionately high and adverse human health or environmental effects of its programs, policies, and activities on minority populations and low-income populations." Section 1-101 of Exec. Order 12898, 59 Fed. Reg. 7629 (Feb. 16, 1994).

EPA determined that there may be minority or low-income populations potentially affected by its proposed action on the PHPP PSD permit application, and determined that it would be appropriate to prepare an Environmental Justice Analysis for this action. EPA therefore prepared an Environmental Justice Analysis, which is included in the administrative record for EPA's proposed PSD permit for the Project. EPA's analysis concludes that the Project will not cause or contribute to air quality levels in excess of health standards for the pollutants regulated under EPA's proposed PSD permit for the Project, and that therefore the Project will not result in disproportionately high and adverse human health or environmental effects with respect to these air pollutants on minority or low-income populations residing near the proposed Project, or on the community as a whole.

12. Clean Air Act Title IV (Acid Rain Permit) and Title V (Operating Permit)

The applicant must apply for and obtain an acid rain permit and a Title V operating permit. The applicant will apply for these permits after the facility is constructed, as these permits are not required prior to construction. The District has jurisdiction to issue the Acid Rain Permit and the Operating Permit for the facility.

13. Comment Period, Hearing, Public Information Meeting, Procedures for Final Decision, and EPA Contact

The comment period for EPA's proposed PSD permit for the Project begins on August 11, 2011. Any interested person may submit written comments on EPA's proposed PSD permit for the Project. All written comments on EPA's proposed action must be received by EPA via email by **September 14, 2011**, or postmarked by **September 14, 2011.** Comments must be sent or delivered in writing to Lisa Beckham at one of the following addresses:

E-mail: R9airpermits@epa.gov

U.S. Mail: Lisa Beckham (AIR-3)
U.S. EPA Region 9
75 Hawthorne Street
San Francisco, CA 94105-3901
Phone: (415) 972-3811

Comments should address the proposed PSD permit and facility, including such matters as:

1. The Best Available Control Technology (BACT) determinations;
2. The effects, if any, on Class I areas;
3. The effect of the proposed facility on ambient air quality; and
4. The attainment and maintenance of the NAAQS.

Alternatively, written or oral comments may be submitted to EPA at the Public Hearing for this matter that EPA will hold on **September 14, 2011,** pursuant to 40 C.F.R. § 124.12, to provide the public with further opportunity to comment on the proposed PSD permit for the Project. At this Public Hearing, any interested person may provide written or oral comments, in English or Spanish, and data pertaining to the proposed permit.

Prior to the Public Hearing, EPA will also hold a Public Information Meeting for the purpose of providing interested parties with additional information and an opportunity for informal discussion of the proposed Project.

The date, time and location of the Public Information Meeting and the Public Hearing are as follows:

Date: September 14, 2011
Time: 4:00 p.m. - 6:00 p.m. (Public Information Meeting)
7:00 p.m. – 10:00 p.m. (Public Hearing)
Location: Larry Chimbole Cultural Center
Manzanita Ballroom, 2nd Floor
38350 Sierra Highway
Palmdale, California 93550-4611

English-Spanish translation services will be provided at both the Public Information Meeting and the Public Hearing.

If you require a reasonable accommodation, by **August 31, 2011** please contact Terisa Williams, EPA Region 9 Reasonable Accommodations Coordinator, at (415) 972-3829, or Williams.Terisa@epa.gov.

All information submitted by the applicant is available as part of the administrative record. The proposed air permit, fact sheet/ambient air quality impact report, permit application and other supporting information are available on the EPA Region 9 website at http://www.epa.gov/region09/air/permit/r9-permits-issued.html#pubcomment. The administrative record may also be viewed in person, Monday through Friday (excluding Federal holidays) from 9:00 AM to 4:00 PM, at the EPA Region 9 address above. Due to building security procedures, please call Lisa Beckham at (415) 972-3811 at least 24 hours in advance to arrange a visit. Hard copies of the administrative record can be mailed to individuals upon request in accordance with Freedom of Information Act requirements as described on the EPA Region 9 website at http://www.epa.gov/region9/foia/ .

Additional information concerning the proposed PSD permit may be obtained between the hours of 9:00 a.m. and 4:00 p.m., Monday through Friday, excluding holidays, from:

E-mail: R9airpermits@epa.gov

U.S. Mail: Lisa Beckham (AIR-3)
U.S. EPA Region 9
75 Hawthorne Street
San Francisco, CA 94105-3901
Phone: (415) 972-3811

EPA's proposed PSD permit for the Project and the accompanying fact sheet/ambient air quality impact report are also available for review at the following locations: Antelope Valley Air Quality Management District, 43301 Division Street, Suite 206, Lancaster, CA 93535, (661) 723-8070; Palmdale City Library, 700 East Palmdale Boulevard, Palmdale, CA 93550-4742, (661) 267-5600; Lancaster Regional Library, 601 W. Lancaster Boulevard, Lancaster, CA 93534-3398, (661) 948-5029; Lake Los Angeles Library, 16921 East Avenue O, Palmdale, CA 93591-3045, (661) 264-0593; and Quartz Hill Library, 42018 N. 50th Street West, Quartz Hill, CA 93536-3590, (661) 943-2454.

All comments that are received will be included in the public docket without change and will be available to the public, including any personal information provided, unless the comment includes Confidential Business Information (CBI) or other information whose disclosure is restricted by statute. Information that is considered to be CBI or otherwise protected should be clearly identified as such and should not be submitted through e-mail. If a commenter sends e-mail directly to the EPA, the e-mail address will be automatically captured and included as part of the public comment. Please note that an e-mail or postal

address must be provided with comments if the commenter wishes to receive direct notification of EPA's final decision regarding the permit.

EPA will consider all written and oral comments submitted during the public comment period before taking final action on the PSD permit application and will send notice of the final decision to each person who submitted comments and contact information during the public comment period or requested notice of the final permit decision. EPA will respond to all substantive comments in a document accompanying EPA's final permit decision and will make the Public Hearing proceedings available to the public.

EPA's final permit decision will become effective 30 days after the service of notice of the decision unless:

1. A later effective date is specified in the decision; or
2. The decision is appealed to EPA's Environmental Appeals Board pursuant to 40 CFR 124.19; or
3. There are no comments requesting a change to the proposed permit decision, in which case the final decision shall become effective immediately upon issuance.

14. Conclusion and Proposed Action

EPA is proposing to issue a PSD permit for the PHPP. We believe that the proposed Project will comply with PSD requirements, including the installation and operation of BACT, and will not cause or contribute to a violation of the applicable NAAQS or applicable PSD increments. We have made this determination based on the information supplied by the applicant and our review of the analyses contained in the permit application and other relevant information contained in our administrative record. EPA will make this proposed permit and this Fact Sheet/AAQIR available to the public for review, and make a final decision after considering any public comments on our proposal.

EXHIBIT E

PALMDALE HYBRID POWER PROJECT'S PSD PERMIT

PREVENTION OF SIGNIFICANT DETERIORATION PERMIT ISSUED PURSUANT TO THE REQUIREMENTS AT 40 CFR § 52.21

U.S. ENVIRONMENTAL PROTECTION AGENCY, REGION IX

PSD PERMIT NUMBER: SE 09-01

PERMITTEE: City of Palmdale
38300 Sierra Highway, Suite A
Palmdale, CA 93550

FACILITY NAME: Palmdale Hybrid Power Project

FACILITY LOCATION: 950 East Avenue M
Palmdale, CA

Pursuant to the provisions of the Clean Air Act (CAA), Subchapter I, Part C (42 U.S.C. Section 7470, *et. seq.*), and the Code of Federal Regulations (CFR) Title 40, Section 52.21, the United States Environmental Protection Agency Region 9 (EPA) is issuing a *Prevention of Significant Deterioration* (PSD) permit to the City of Palmdale. The Permit applies to the construction and operation of a new 570 megawatt (MW, nominal) natural gas-fired combined-cycle power plant, with an integrated 50 MW solar-thermal plant, known as the Palmdale Hybrid Power Project (PHPP) in Palmdale, California.

The City of Palmdale is authorized to construct and operate the PHPP power plant as described herein, in accordance with the permit application (and plans submitted with the permit application), the federal PSD regulations at 40 CFR § 52.21, and other terms and conditions set forth in this PSD Permit. Failure to comply with any condition or term set forth in this PSD Permit may result in enforcement action pursuant to Section 113 of the Clean Air Act. This PSD Permit does not relieve the City of Palmdale from the responsibility to comply with any other applicable provisions of the Clean Air Act (including applicable implementing regulations in 40 CFR Parts 51, 52, 60, 61, 63, and 72 through 75), or other federal, state, and Antelope Valley Air Quality Management District requirements.

Per 40 CFR § 124.15(b), this PSD Permit becomes effective 30 days after the service of notice of this final permit decision unless review is requested on the permit pursuant to 40 CFR § 124.19.

for Deborah Jordan
Director, Air Division

10/18/11
DATE

PALMDALE HYBRID POWER PROJECT (SE 09-01)
PREVENTION OF SIGNIFICANT DETERIORATION PERMIT
PERMIT CONDITIONS

PROJECT DESCRIPTION

The Palmdale Hybrid Power Project (Project) consists of two General Electric (GE) Frame 7FA natural gas-fired combustion turbine-generators (CTGs) rated at 154 megawatt (MW, gross) each, two heat recovery steam generators (HRSGs), one steam turbine generator (STG) rated at 267 MW, and 251 acres of parabolic solar-thermal collectors with associated heat-transfer equipment. The Project will have an electrical output of 570 MW (nominal) or 563 MW (net). The Project will be located on a parcel of land owned by the city of Palmdale, currently zoned for industrial use, in Los Angeles County. The approximately 333-acre parcel is west of the northwest corner of Air Force Plant 42, and east of the intersection of Sierra Highway and East Avenue M. The City of Palmdale is located within the Antelope Valley Air Quality Management District (District).

This Prevention of Significant Deterioration (PSD) permit for the Project requires the use of Best Available Control Technology (BACT) to limit emissions of nitrogen oxides (NO_x), carbon monoxide (CO), total particulate matter (PM), particulate matter under 10 micrometers (μm) in diameter (PM_{10}), particulate matter under 2.5 (μm) in diameter ($PM_{2.5}$), and greenhouse gases (GHG), to the greatest extent feasible. Air pollution emissions from the Project would not cause or contribute to violations of any National Ambient Air Quality Standards (NAAQS) or any applicable PSD increments for the pollutants regulated under the PSD permit.

Additional equipment includes auxiliary equipment including a natural gas heater and boiler, a diesel-fired emergency generator and emergency firewater pump engine, cooler towers, and circuit breakers.

EQUIPMENT LIST

The following devices and activities are subject to this PSD permit:

Unit ID	Description
GEN1	• 154 MW (gross) combustion turbine generator (CTG), with a maximum heat input rate of 1,736 MMBtu/hr (HHV) • Natural gas-fired GE Model Frame 7FA Rapid Start Process CTG • Vented to a dedicated Heat Recovery Steam Generator (HRSG) and a 267 MW Steam Turbine Generator (STG) shared with GEN2 • Integrated (through the HRSG and STG) with a 251-acre solar-thermal plant (STP) consisting of parabolic solar-thermal collectors and associated heat-transfer equipment designed to contribute up to 50 MW of generation from the STG • Emissions of NO_x and CO controlled by Dry Low-NO_X (DLN) Combustors, Selective Catalytic Reduction (SCR), and an Oxidation Catalyst (Ox-Cat)
GEN2	• 154 MW (gross) combustion turbine generator (CTG), with a maximum heat input rate of 1,736 MMBtu/hr (HHV) • Natural gas-fired GE Model Frame 7FA Rapid Start Process CTG • Vented to a dedicated Heat Recovery Steam Generator (HRSG) and a 267 MW Steam Turbine Generator (STG) shared with GEN2 • Integrated (through the HRSG and STG) with a 251-acre solar-thermal plant (STP) consisting of parabolic solar-thermal collectors and associated heat-transfer equipment designed to contribute up to 50 MW of generation from the STG • Emissions of NO_x and CO controlled by Dry Low-NO_X (DLN) Combustors, Selective Catalytic Reduction (SCR), and an Oxidation Catalyst (Ox-Cat)
DB1	• 500 MMBtu/hr (HHV) Duct Burner for GEN1, fired on natural gas
DB2	• 500 MMBtu/hr (HHV) Duct Burner for GEN2, fired on natural gas
D1	• 110 MMBtu/hr (HHV) Auxiliary Boiler with ultra low-NO_X burner, fired on natural gas
D2	• 2,000 kW (2,683 hp) Emergency Internal Combustion (IC) Engine, fired on Diesel fuel • 40 CFR Part 60, Subpart IIII emission standards • California Air Resources Board Tier 2 emission standards
D3	• 182 hp (135 kW) Emergency Diesel-fired IC Engine Firewater Pump Engine • 40 CFR Part 60, Subpart IIII emission standards • California Air Resources Board Tier 3 emission standards

Unit ID	Description
D4	• 40 MMbtu/hr (HHV) Auxiliary Heater with ultra low-NO_X burner, fired on natural gas
D5	• Cooling tower with 130,000 gallons per minute maximum circulation rate • Total dissolved solids (TDS) concentration in makeup water of 5,000 ppm (531 mg/L) • Drift eliminator with drift losses less than or equal to 0.0005 percent based on circulation rate
CB	• Enclosed-pressure SF_6 Circuit Breakers • 0.5% (by weight) annual leakage rate • 10% (by weight) leak detection system
MV	• Maintenance vehicles generating fugitive road dust when traveling on paved and unpaved roadways in the solar field for the Project • Project Fugitive Dust Control Plan

PERMIT CONDITIONS

I. PERMIT EXPIRATION

As provided in 40 CFR § 52.21(r), this PSD Permit shall become invalid if construction:

A. is not commenced (as defined in 40 CFR § 52.21(b)(9)) within 18 months after the approval takes effect; or

B. is discontinued for a period of 18 months or more; or

C. is not completed within a reasonable time.

II. PERMIT NOTIFICATION REQUIREMENTS

Permittee shall notify EPA Region IX by letter or by electronic mail of the:

A. date construction is commenced, postmarked within 30 days of such date;

B. actual date of initial startup, as defined in 40 CFR § 60.2, postmarked within 15 days of such date;

C. date upon which initial performance tests will commence, in accordance with the provisions of Condition X.G, postmarked not less than 30 days prior to such date. Notification may be provided with the submittal of the performance test protocol required pursuant to Condition X.G; and

D. date upon which initial performance evaluation of the continuous emissions monitoring system (CEMS) will commence in accordance with 40 CFR § 60.13(c), postmarked not less than 30 days prior to such date. Notification may be provided with the submittal of the CEMS performance test protocol required pursuant to Condition X.F.

III. FACILITY OPERATION

A. At all times, including periods of startup, shutdown, shakedown, and malfunction, Permittee shall, to the extent practicable, maintain and operate the Facility, including associated air pollution control equipment, in a manner consistent with good air pollution control practice for minimizing emissions. Determination of whether acceptable operating and maintenance procedures are being used will be based on information available to EPA, which may include, but is not limited to, monitoring results, opacity observations, review of operating maintenance procedures and inspection of the Facility.

B. The Permittee shall operate and maintain the STP in a manner consistent with good engineering practices for its full utilization.

C. As soon as practicable following initial startup of the power plant (as defined in 40 CFR § 60.2) but prior to commencement of commercial operation (as defined in 40 CFR § 72.2), and thereafter, the Permittee shall develop and implement an operation and maintenance plan for the STP, consistent with Condition III.B above. At a minimum, the plan shall identify measures for assessing the performance of the STP, the acceptable range of the plant performance measures for achieving the design electrical output, the methods for monitoring the plant performance measures, and the routine procedures for maintaining the STP in good operating condition.

IV. MALFUNCTION REPORTING

A. Permittee shall notify EPA at R9.AEO@epa.gov within two (2) working days following the discovery of any failure of air pollution control equipment or process equipment, or failure of a process to operate in a normal manner, which results in an increase in emissions above the allowable emission limits stated in Section X of this permit.

B. In addition, Permittee shall provide an additional notification to EPA in writing or electronic mail within fifteen (15) days of any such failure described under Condition IV.A. This notification shall include a description of the malfunctioning equipment or abnormal operation, the date of the initial malfunction, the period of time over which emissions were increased due to the failure, the cause of the failure, the

estimated resultant emissions in excess of those allowed in Section X, and the methods utilized to mitigate emissions and restore normal operations.

C. Compliance with this malfunction notification provision shall not excuse or otherwise constitute a defense to any violation of this permit or any law or regulation such malfunction may cause.

V. RIGHT OF ENTRY

The EPA Regional Administrator, and/or an authorized representative, upon the presentation of credentials, shall be permitted:

A. to enter the premises where the Facility is located or where any records are required to be kept under the terms and conditions of this PSD Permit;

B. during normal business hours, to have access to and to copy any records required to be kept under the terms and conditions of this PSD Permit;

C. to inspect any equipment, operation, or method subject to requirements in this PSD Permit; and

D. to sample materials and emissions from the source(s).

VI. TRANSFER OF OWNERSHIP

In the event of any changes in control or ownership of the Facility, this PSD Permit shall be binding on all subsequent owners and operators. Within 14 days of any such change in control or ownership, Permittee shall notify the succeeding owner and operator of the existence of this PSD Permit and its conditions by letter. Permittee shall send a copy of this letter to EPA Region IX within thirty (30) days of its issuance.

VII. SEVERABILITY

The provisions of this PSD Permit are severable, and, if any provision of the PSD Permit is held invalid, the remainder of this PSD Permit shall not be affected.

VIII. ADHERENCE TO APPLICATION AND COMPLIANCE WITH OTHER ENVIRONMENTAL LAWS

Permittee shall construct the Project in compliance with this PSD permit, the application

on which this permit is based, and all other applicable federal, state, and local air quality regulations. This PSD permit does not release the Permittee from any liability for compliance with other applicable federal, state and local environmental laws and regulations, including the Clean Air Act.

IX. RESERVED

X. SPECIAL CONDITIONS

A. Annual Facility Emission Limits

1. Annual emissions, in tons per year (tpy) on a 12-month rolling average basis, shall not exceed the following:

	NO_x	CO	PM	PM_{10}	$PM_{2.5}$
Total Facility	**114.9 tpy**	**244.1 tpy**	**111.1tpy**	**94.5tpy**	**88.0**

	CO_2e
Total Facility	**1,913,000 tpy**

2. Only Public Utilities Commission (PUC)-quality pipeline natural gas shall be fired at this Facility. PUC-quality pipeline natural gas shall not exceed a sulfur content of 0.20 grains per 100 dry standard cubic feet on a 12-month rolling average basis and shall not exceed a sulfur content of 1.0 grains per 100 dry standard cubic feet, at any time.

B. Air Pollution Control Equipment and Operation

As soon as practicable following initial startup of the power plant (startup as defined in 40 CFR § 60.2) but prior to commencement of commercial operation (as defined in 40 CFR § 72.2), and thereafter, except as noted below in Condition X.D, Permittee shall install, continuously operate, and maintain the SCR systems for control of NO_X and the Ox-Cat systems for control of CO for Units GEN1 and GEN2. Permittee shall also perform any necessary operations to minimize emissions so that emissions are at or below the emission limits specified in this permit.

C. Combustion Turbine Generator (CTG) Emission Limits

1. Except as noted below under Condition X.D, on and after the date of initial startup, Permittee shall not discharge or cause the discharge of emissions from each CTG Unit (of GEN1 and GEN2) into the atmosphere in excess of the following:

	Emission Limit (per CTG) (no duct burning)	Emission Limit (per CTG) (with duct burning)
NO_x	• 13.47 lb/hr • 1-hr average • 2.0 ppmvd @ 15% O_2 3-Year Demonstration Period • 8.20 lb/hr • 1-hr average • 2.0 ppmvd @ 15% O_2	• 16.60 lb/hr • 1-hr average • 2.0 ppmvd @ 15% O_2
CO	Post-Demonstration Period • 6.15 lb/hr • 1-hr average • 1.5 ppmvd @ 15% O_2	• 10.10 lb/hr • 1-hr average • 2.0 ppmvd @ 15% O_2
PM, PM_{10}, $PM_{2.5}$	Conditions in X.C.3 may affect the timing and applicability of post-demonstration period emission limits. • 0.0048 lb/MMBtu • 8.46 lb/hr • 9-hr average • PUC-quality natural gas (Sulfur content of no greater than 0.20 grains per 100 dscf on a 12-month average and not greater than 1.0 gr/dscf at any time)	• 0.0049 lb/MMBtu • 11.3 lb/hr • 9-hr average • PUC-quality natural gas (Sulfur content of no greater than 0.20 grains per 100 dscf on a 12-month average and not greater than 1.0 gr/dscf at any time)
GHG	• 774 lb CO_2/MWh source-wide net output • 7,319 Btu/kWh source-wide net heat rate • 365-day rolling average	

2. The hours of operation for each duct burner (DB1 and DB2) shall not exceed 2,000 hours per 12-month rolling average. Permittee shall ensure that the duct burners are not operated unless the associated turbine units are in operation.

3. CO Emissions Limit Demonstration Period – The Demonstration Period is defined as the first 3 years immediately following the commencement of commercial operations (as defined in 40 CFR § 72.2).

   a. Permittee shall design the gas turbines to achieve a CO emission rate of 1.5 ppmvd @ 15% O_2 and 6.15 lb/hr over a 1-hour period without duct firing. Prior to construction, Permittee shall submit design specifications to EPA as proof that the gas turbines were designed to achieve such a rate, and a plan that sets forth the measures that will be taken to maintain the system and optimize its performance.

   b. During the Demonstration Period, Permittee shall operate the gas turbines according to the design specifications, within the design parameters, and consistent with the maintenance and performance optimization plan described above in Condition X.C.3.a. During the Demonstration Period, Permittee shall not discharge or cause the discharge of CO emissions from each CTG Unit (GEN1 and GEN2) into the atmosphere in excess of the following amounts over a 1-hour averaging period: 2.0 ppmvd CO @ 15% O_2 and (1) 10.10 lb/hr with duct firing or (2) 8.20 lb/hr without duct firing.

   c. Following the Demonstration Period, Permittee shall not discharge or cause the discharge of CO emissions from each CTG Unit (GEN1 and GEN2) into the atmosphere in excess of the following amounts over a 1-hour averaging period except as specified in Condition X.C.3.d:

      i. 1.5 ppmvd @ 15% O_2 without duct firing;
      ii. 2.0 ppmvd @ 15% O_2 with duct firing;
      iii. 6.15 lb/hr without duct firing; and
      iv. 10.10 lb/hr with duct firing.

   d. If, during the Demonstration Period, Permittee determines that the CO limits in Conditions X.C.3.i or X.C.3.iii are not feasible, Permittee shall submit an application to EPA prior to the end of the Demonstration Period requesting a revision of those limits. Such an application must contain data and information that demonstrates that the Facility was operated according to the design specifications and parameters, and the maintenance and performance optimization plan, identified above in Condition X.C.3.a, as well as a technical justification explaining why the lower limits are not feasible. If, after the applicable review process following such a submission (which will include an opportunity for public review and comment), it is determined through data and information gathered during the Demonstration Period that different CO limits are necessary, the limits in Condition X.C.3.i and X.C.3.iii will be revised accordingly. Provided that the application specified in this condition is postmarked prior to the end of the Demonstration Period, the emission limits in Condition X.C.3.b

shall remain in effect until EPA evaluates the application and makes a final decision regarding the revision of the limits in Conditions X.C.3.i or X.C.3.iii.

D. Requirements during Gas Turbine (GEN1 and GEN2) Startup and Shutdown

1. Startup is defined as the period beginning with ignition and lasting until either the equipment complies with all operating permit limits for two consecutive 15-minute averaging periods or the maximum time allowed for the event after ignition, whichever occurs first; and the period of time during which a unit is brought from a shutdown status to its operating temperature and pressure, including the time required by the unit's emission control system to reach full operations and demonstrate compliance with Condition X.C.

   a. A cold startup means a startup when the CTG has not been in operation during the preceding 48 hours.

   b. Warm and hot start-ups include all startups that are not a cold startup.

2. Shutdown is defined as the period beginning with the lowering of equipment from normal operating load and lasting until fuel flow is completely off and combustion has ceased.

3. The duration of startup and shutdown periods and emissions of NO_X and CO shall not exceed the following, for each CTG (GEN1 and GEN2) and associated HRSG unit, as verified by the CEMS:

	NO_x	CO	Duration
Cold Startup	96 lb/event	410 lb/event	110 minutes
Warm and Hot Startup	40 lb/event	329 lb/event	80 minutes
Shutdown	57 lb/event	337 lb/event	30 minutes

4. Permittee must operate the CEMS during startup and shutdown periods.

5. Permittee must record the time, date, and duration of each startup and shutdown event. The records must include calculations of NO_X and CO emissions during each event based on the CEMS data. These records must be kept for five years following the date of such event.

6. During startup, the SCR system, including ammonia injection, shall be operated as soon as the SCR reaches an operating temperature of 550 degrees Fahrenheit.

7. During startup or shutdown, emissions of NO_x from both CTGs (GEN1 and GEN2) combined shall not exceed 130 lb/hr, as verified by the CEMS.

8. During startup or shutdown, emissions of CO from both CTGs (GEN1 and GEN2) combined shall not exceed 790 lb/hr, as verified by the CEMS.

E. Auxiliary Combustion Equipment Emission Limits and Work Practices

1. At all times, including equipment startup and shutdown, Permittee shall not discharge or cause the discharge of emissions from each unit into the atmosphere in excess of the following, and shall otherwise comply with the following specifications:

Unit ID	NO_x	CO	PM / PM_{10} $PM_{2.5}$	GHG
Unit D1 110 MMBtu/hr (HHV) Boiler	• 9 ppmvd @ 3% O_2 • 3-hr average	• 50 ppmvd @ 3% O_2 • 3-hr average	• 0.8 lb/hr • PUC-quality pipeline natural gas	Annual boiler tune-ups
Unit D2 2,000 kW (2,683 hp) engine	• 6.4 g/kW-hr, (4.8 g/hp-hr), includes NMHC • 3-hr average	• 3.5 g/KW-hr, (2.6 g/hp-hr)	• 0.20 g/kW-hr, (0.15 g/hp-hr) • Use of ultra-low sulfur fuel, not to exceed 15 ppm fuel sulfur	Not applicable
Unit D3 182 hp firewater pump	• 4.0 g/KW-hr, (3.0 g/hp-hr), includes NMHC • 3-hr average		• Fuel supplier certification	Not applicable
Unit D4 40 MMBtu/hr (HHV) Heater	• 9 ppmvd @ 3% O_2 • 3-hr average	• 50 ppmvd @ 3% O_2 • 3-hr average	• 0.3 lb/hr • PUC-quality pipeline natural gas	Annual boiler tune-ups
Unit D5 130,000 gpm Cooling Tower	Not applicable	Not applicable	• 1.6 lb/hr (as total PM) • $\leq$ 0.0005% drift • $\leq$ 5,000 ppm total dissolved solids	Not applicable

Unit ID	NO_x	CO	PM / PM_{10} $PM_{2.5}$	GHG
CB SF_6 Circuit Breakers	Not applicable	Not applicable	Not applicable	• 9.56 tpy CO_2e • 12-month rolling total
MV Maintenance Vehicles	Not applicable	Not applicable	Conditions in X.E.9 including a Fugitive Dust Control Plan	Not applicable

2. Unit D1 shall not operate during normal operations of GEN1 or GEN2, except during periods of, or immediately following, startup. Unit D1 shall be shut down as soon as practicable after the completion of any startup process as defined in Condition X.D.1. Annual hours of operation for Unit D1 shall not exceed 500 hours per 12-month rolling average.

3. Except during an emergency, Unit D2 shall be limited to operation of the engine for maintenance and testing purposes. Annual hours of operation for Unit D2, for maintenance and testing, shall not exceed 50 hours per 12-month rolling average.

4. Except during an emergency, Unit D3 shall be limited to operation of the engine for maintenance and testing purposes, including as required for fire safety testing. Annual hours of operation for Unit D3, for maintenance and testing, shall not exceed 50 hours per 12-month rolling average.

5. Units D2 and D3 shall not operate during startup of GEN1 or GEN2, except when Units D2 or D3 are required for emergency operations.

6. Unit D4 restrictions on usage shall be limited to annual hours of operation of not to exceed 1,000 hours per 12-month rolling average.

7. Unit D5 cooling tower emission limits shall not exceed the following:

   a. Drift rate shall not exceed 0.0005% with a maximum circulation rate of 130,000 gallons per minute (gpm). The maximum total dissolved solids (TDS) shall not exceed 5,000 ppm.

   b. The maximum hourly total PM emission rate from the cooling tower and the evaporative condenser combined shall not exceed 1.6 lb/hr.

8. Unit CB enclosed-pressure SF_6 circuit breakers:

a. Emissions shall not exceed an annual leakage rate of 0.5% by weight; and

b. Shall be equipped with a 10% by weight leak detection system.

9. For Unit MV, maintenance vehicles that travel on paved and unpaved roadways in the solar field associated with the Project, Permittee shall complete the following prior to the commencement of commercial operation (as defined in 40 CFR § 72.2):

   a. Pave the main access road into the plant site;

   b. Submit a Project Fugitive Dust Control Plan to EPA that includes fugitive road dust control measures for unpaved and paved roads, including, but not limited to:

      i. use of a durable non-toxic soil stabilizer applied throughout the solar field for dust control;
      ii. use of a durable non-toxic soil stabilizer to treat unpaved roads within the solar field used by wash trucks that spray and clean the mirrors;
      iii. inspection and maintenance procedures to ensure that the unpaved roads remain stabilized;
      iv. use of water trucks applying water on disturbed areas where soil stabilizers are not as effective;
      v. use of water in the mirror washing for incidental dust control; and
      vi. limiting vehicle speeds to no more than 10 miles per hour on unpaved roadways, with the exception that vehicles may travel up to 25 miles per hour on stabilized unpaved roads as long as such speeds do not create visible dust emissions.

10. Units D1 and D4 shall undergo annual tune-ups and meet the associated requirements of Condition X.I.9 as follows (if the unit is not operating on the required date for a tune-up, the tune-up must be conducted within one week of startup):

    a. Inspect the burner, and clean or replace any components of the burner as necessary (you may delay the burner inspection until the next scheduled unit shutdown, but you must inspect each burner at least once every 18 months).

    b. Inspect the flame pattern, and adjust the burner as necessary to optimize the flame pattern. The adjustment should be consistent with the manufacturer's specifications.

    c. Inspect the system controlling the air-to-fuel ratio, and ensure that it is correctly calibrated and functioning properly.

    d. Optimize total emissions of carbon monoxide. This optimization should be consistent with the manufacturer's specifications.

e. Measure the concentrations in the effluent stream of carbon monoxide in parts per million, by volume, and oxygen in volume percent, before and after the adjustments are made (measurements may be either on a dry or wet basis, as long as it is the same basis before and after the adjustments are made).

F. Continuous Emissions Monitoring System (CEMS) for GEN1 and GEN2

1. At the earliest feasible opportunity after first fire of GEN1 and GEN2 and before GEN1 and GEN2 commence commercial operation (as defined in 40 CFR § 72.2), in accordance with the recommendations of the equipment manufacturer and the construction contractor:

   a. Permittee shall install, calibrate, and operate a CEMS each for GEN1 and GEN2 that measures stack gas NO_X, CO, and CO_2 concentrations in ppmv. The concentrations shall be corrected to 15% O_2 on a dry basis. No later than the end of the shakedown period as defined in Condition X.J. or upon commencing commercial operations, whichever comes first, Permittee shall also maintain, certify, and quality-assure a CEMS for each CTG that measures stack gas NO_X, CO, and CO_2 concentrations in ppmv, and shall conduct initial certification of the CEMS in accordance with Condition X.F.6. The concentrations shall be corrected to 15% O_2 on a dry basis.

   b. If Permittee chooses to install an O_2 CEMS, it shall be installed, calibrated and operated to measure O_2 concentrations in ppmv. No later than the end of the shakedown period as defined in Condition X.J. or upon commencing commercial operations, whichever comes first, Permittee shall also maintain, certify, and quality-assure the CEMS for each CTG that measures O_2 concentrations in ppmv, and shall conduct initial certification of the CEMS in accordance with Condition X.F.6. Permittee may not install an O_2 CEMS in lieu of the CO_2 CEMS in Condition X.F.1.a.

2. The NO_X, CO_2, and O_2 CEMS shall meet the applicable requirements of 40 CFR Part 75.

3. The CO CEMS shall meet the applicable requirements of 40 CFR Part 60 Appendix B, Performance Specification 4, and 40 CFR Part 60 Appendix F, Procedure 1, except the relative accuracy specified in section 13.2 of 40 CFR Part 60 Appendix B, Performance Specification 4 shall not exceed 20 percent.

4. Each CEMS shall complete a minimum of one cycle of operation (sampling, analyzing, and data recording) for each successive 15-minute clock-hour period.

5. The CEMS shall be tested in accordance with Conditions X.F.2 and X.F.3.

6. The initial certification of the CEMS may either be conducted separately, as specified in 40 CFR § 60.334(b)(1), or as part of the initial performance test of each emission unit. The CEMS must undergo and pass initial performance specification testing on or before the date of the initial performance test.

7. The CEMS shall meet the requirements of 40 CFR § 60.13. Data sampling, analyzing, and recording shall also be adequate to demonstrate compliance with emission limits during startup and shutdown.

8. Not less than 90 days prior to the date of initial startup of the Facility, the Permittee shall submit to the EPA a quality assurance project plan for the certification and operation of the CEMS. Such a plan shall conform to EPA requirements contained in 40 CFR Part 60 Appendix F for CO, 40 CFR Part 75 for NO_X and O_2 or CO_2, and 40 CFR Part 75 Appendix B for stack flow. The plan shall be updated and resubmitted upon request by EPA. The protocol shall specify how emissions during startups and shutdowns will be determined and calculated, including quantifying flow accurately if calculations are used.

9. The gas turbine CEMS shall be audited quarterly and tested annually in accordance with 40 CFR Part 60 Appendix F, Procedure 1. Permittee shall perform a full stack traverse during initial run of annual RATA testing of the CEMS, with testing points selected according to 40 CFR Part 60 Appendix A, Method 1.

10. Permittee shall submit a CEMS performance test protocol to the EPA no later than 30 days prior to the test date to allow review of the test plan and to arrange for an observer to be present at the test. The performance test shall be conducted in accordance with the submitted protocol and any changes required by EPA.

11. Permittee shall furnish the EPA a written report of the results of performance tests within 60 days of completion.

12. The stack gas volumetric flow rates shall be calculated in accordance with the fuel flowmeter requirements of 40 CFR Part 75 Appendix D in combination with the appropriate parts of EPA Method 19.

13. Prior to the date of initial startup of GEN1 and GEN2, Permittee shall install, and thereafter maintain and operate, continuous monitoring and recording systems to measure and record the following operational parameters:

    a. The ammonia injection rate of the ammonia injection system of the SCR system.

    b. Exhaust gas temperature at the inlet to the SCR reactor.

14. Permittee shall measure and record, for each Unit GEN1/DB1 and Unit GEN2/DB2, the actual heat input (Btu) on an hourly basis.

15. Permittee shall measure and record, for the entire facility, the following:

    a. Net energy output (MWh_{net} and kWh_{net}) on an hourly basis;

    b. Pounds of CO_2 per net energy output (lb CO_2/MWh_{net}) on an hourly basis;

    c. Net heat rate (Btu/kWh_{net}) on an hourly basis, based on total heat input for the facility;

    d. The 365-day rolling average emission rate of lb CO_2/MWh_{net} and Btu/kWh_{net}. The 365-day rolling average shall be based on the average hourly recordings.

G. Performance Tests

1. Stack Tests

    a. Within 60 days after achieving normal operation, but not later than 180 days after the initial startup of equipment, and, unless otherwise specified, annually thereafter (within 30 days of the initial performance test anniversary), Permittee shall conduct performance tests (as described in 40 CFR § 60.8) as follows:

        i. NO_X, CO, CO_2, PM, PM_{10}, and $PM_{2.5}$ emissions from each gas turbine (Units GEN1/DB1 and GEN2/DB2);
        ii. NO_X and CO emissions from the 110 MMBtu/hr boiler (D1) and the 40 MMBtu/hr heater (D4); PM, PM_{10}, and $PM_{2.5}$ emissions from the 110 MMBtu/hr boiler (D1) and the 40 MMBtu/hr heater (D4) shall be tested initially and at least every five years (within 30 days of the initial performance test anniversary);
        iii. NO_X, CO, PM, PM_{10}, and $PM_{2.5}$ emissions from the 2,000 kW (2,683 hp) internal combustion engine (D2), initial performance test and at least every five years beginning ten years after the initial performance test (within 30 days of the initial performance test anniversary);
        iv. NO_X, CO, PM, PM_{10}, and $PM_{2.5}$ emissions from the 182 hp firewater pump (D3), initial performance test and at least every five years beginning ten years after the initial performance test (within 30 days of the initial performance test anniversary); and
        v. PM, PM_{10}, and $PM_{2.5}$ emissions from the cooling tower (D5).

    b. Permittee shall submit a performance test protocol to EPA no later than 30 days prior to the test to allow review of the test plan and to arrange for an observer to be present

at the test. The performance test shall be conducted in accordance with the submitted protocol, and any changes required by EPA.

c. Performance tests shall be conducted in accordance with the test methods set forth in 40 CFR § 60.8 and 40 CFR Part 60 Appendix A, as modified below. In lieu of the specified test methods, equivalent methods may be used with prior written approval from EPA:

   i. EPA Methods 1-4 and 7E for NO_X emissions measured in ppmvd
   ii. EPA Methods 1-4, 7E, and 19 for NO_X emissions measured on a heat input basis
   iii. EPA Methods 1-4 and 10 for CO emissions
   iv. EPA Methods 1-4 and 3B for CO_2 emissions
   v. EPA Methods 5 and 202, or Methods 201A and 202, for PM, PM_{10}, and $PM_{2.5}$, in accordance with the test methods set forth in 40 CFR § 60.8, 40 CFR Part 60 Appendix A, and 40 CFR Part 51 Appendix M; in lieu of Method 202, Permittee may use EPA Conditional Test Methods for particulate matter CTM-039
   vi. Modified Method 306 or the Cooling Tower Institute's heated bead test method for PM emissions from the cooling tower, and
   vii. the provisions of 40 CFR § 60.8(f).

d. The initial performance test conducted after initial startup shall use the test procedures for a "high NO_2 emission site," as specified in San Diego Test Method 100, to measure NO_X emissions. The source shall be classified as either a "low" or "high" NO_2 emission site based on these test results. If the emission source is classified as a:

   i. "high NO_2 emission site," then each subsequent performance test shall use the test procedures for a "high NO_2 emission site," as specified in San Diego Test Method 100.
   ii. "low NO_2 emission site," then the test procedures for a "high NO_2 emission site," as specified in San Diego Test Method 100, shall be performed once every five years to verify the source's classification as a "low NO_2 emission site."

e. The performance test methods for NO_X emissions specified in Condition X.G.1.c.i and ii., may be modified as follows:

   i. Perform a minimum of 9 reference method runs, with a minimum time per run of 21 minutes, at a single load level, between 90 and 100 percent of peak (or the highest physically achievable) load, and
   ii. Use the test data both to demonstrate compliance with the applicable NO_X emission limit and to provide the required reference method data for the RATA of the CEMS.

f. Upon written request and adequate justification from the Permittee, EPA may waive a specific annual test and/or allow for testing to be done at less than maximum operating capacity.

g. For performance test purposes, sampling ports, platforms, and access shall be provided on the emission unit exhaust system in accordance with the requirements of 40 CFR § 60.8(e).

h. Permittee shall furnish the EPA a written report of the results of performance tests within 60 days of completion.

2. Cooling Tower Total Dissolved Solids Testing

a. Permittee shall perform weekly tests of the blow-down water quality using an EPA-approved method. The operator shall maintain a log that contains the date and result of each blow-down water quality test, the water circulation rate at the time of the test, and the resulting mass emission rate. This log shall be maintained onsite for a minimum of five years and shall be provided to EPA and District personnel upon request.

b. Permittee shall calculate PM, PM_{10}, and $PM_{2.5}$ emission rate using an EPA-approved calculation based on the TDS and water circulation rate.

c. The operator shall conduct all required cooling tower water quality tests in accordance with an EPA-approved test and emissions calculation protocol. Thirty (30) days prior to the first such test, the operator shall provide a written test and emissions calculation protocol for EPA review and approval, with a copy to the District as specified in Condition XII below.

d. A maintenance procedure shall be established that states how often and what procedures will be used to ensure the integrity of the drift eliminators, to ensure that the TDS limits are not exceeded, and to ensure compliance with recirculation rates. This procedure is to be kept onsite and made available to EPA and District personnel upon request. Permittee shall promptly report any deviations from this procedure.

3. Fuel Testing

a. Permittee shall take monthly samples of the natural gas combusted. The samples shall be analyzed for sulfur content using an ASTM method. The sulfur content test results shall be retained onsite and taken to ensure compliance with Special Conditions X.C and X.E for Units GEN1/DB1, GEN2/DB2, D1, and D4. As an

alternative, Permittee may obtain laboratory analysis of sulfur content from the fuel supplier on a monthly basis, if Permittee can demonstrate that the fuel tested is representative of fuel delivered to the facility.

H. Monitoring for Auxiliary Equipment

1. Permittee shall install and maintain an operational non-resettable totalizing mass or volumetric flow meter in each fuel line for the 110 MMBtu/hr boiler (Unit D1) and the 40 MMBtu/hr heater (Unit D4).

2. Permittee shall install and maintain an operational non-resettable elapsed time meter for the 110 MMBtu /hr boiler (Unit D1), 2,000 kW emergency use engine (Unit D2), the 182 hp emergency-use firewater pump (Unit D3), and the 40 MMBtu/hr heater (Unit D4).

3. Permittee shall install and maintain a leak detection system on the circuit breakers that signals an alarm in the facility's control room in the event that any circuit breaker loses more than 10% of its dielectric fluid. The owner/operator shall promptly respond to any alarm, investigate the circuit breaker involved, and fix any leak-tightness problems that caused the alarm.

I. Recordkeeping and Reporting

1. Permittee shall maintain a file of all records, data, measurements, reports, and documents related to the operation of the Facility, including, but not limited to, the following: all records or reports pertaining to adjustments and/or maintenance performed on any system or device at the Facility; all records relating to performance tests and monitoring of auxiliary combustion equipment; for each diesel fuel oil delivery, documents from the fuel supplier certifying compliance with the fuel sulfur content limit of Condition X.E; and all other information required by this permit recorded in a permanent form suitable for inspection.

2. Permittee shall maintain CEMS records that include the following: the occurrence and duration of any startup, shutdown, shakedown, or malfunction, performance testing, evaluations, calibrations, checks, adjustments, maintenance, duration of any periods during which a continuous monitoring system or monitoring device is inoperative, and corresponding emission measurements.

3. Permittee shall maintain records of all source tests and monitoring and compliance information required by this permit.

4. Permittee shall maintain records and submit a written report of all excess emissions to EPA semi-annually, except when: more frequent reporting is specifically required by an

applicable subpart; or the Administrator, on a case-by-case basis, determines that more frequent reporting is necessary to accurately assess the compliance status of the source. The report is due on the 30th day following the end of each semi-annual period and shall include the following:

a. Time intervals, data and magnitude of the excess emissions, the nature and cause (if known), corrective actions taken and preventive measures adopted;

b. Applicable time and date of each period during which the CEMS was inoperative (monitor down-time), except for zero and span checks, and the nature of CEMS repairs or adjustments;

c. A statement in the report of a negative declaration; that is, a statement when no excess emissions occurred or when the CEMS has not been inoperative, repaired, or adjusted;

d. Any failure to conduct any required source testing, monitoring, or other compliance activities; and

e. Any violation of limitations on operation, including but not limited to restrictions on hours of operation.

5. Excess emissions shall be defined as any period in which the Facility emissions exceed the maximum emission limits set forth in this permit.

6. A period of monitor down-time shall be any unit operating clock hour in which sufficient data are not obtained by the CEMS to validate the hour for NO_X, CO, CO_2, or O_2, while the CEMS is also meeting the requirements of Condition X.F.7.

7. Excess emissions indicated by the CEM system, source testing, or compliance monitoring shall be considered violations of the applicable emission limit for the purpose of this permit.

8. Permittee shall maintain the Fugitive Dust Control Plan on-site, which shall include all documentation related to demonstrating compliance with Condition X.E.9 for Unit MV, in a permanent form suitable for inspection.

9. Permittee shall conduct annual tune-ups as required by Condition X.E.10 for Units D1 and D4 and maintain onsite, and submit if requested by the Administrator, a biennial report containing the information in paragraphs (a) through (c) below:

   a. The concentrations of CO in the effluent stream in parts per million, by volume, and

oxygen in volume percent, measured before and after the tune-up of the boiler.

b. A description of any corrective actions taken as a part of the tune-up of the boiler.

c. The type and amount of fuel used over the 12 months prior to the biennial tune-up of the boiler.

10. Permittee shall record the pounds of dielectric fluid added to the circuit breakers each month.

11. The Permittee shall maintain a copy of the current operation and maintenance plan for the STP, and shall keep a copy of all prior versions of the plan for a minimum of five years. The Permittee shall also keep records of the monitoring data for each of the plant performance measures and all maintenance activities; the Permittee shall maintain such records for a minimum of five years following the date they are created

12. Unless otherwise specified herein, all records required by this PSD Permit shall be retained for not less than five years following the date of such measurements, maintenance, reports, and/or records.

J. Shakedown Periods

The combustion turbine emission limits and requirements in Conditions X.C, X.D, and X.E shall not apply during combustion shakedown periods. Shakedown is defined as the period beginning with initial startup and ending no later than initial performance testing, during which the Permittee conducts operational and contractual testing and tuning to ensure the safe, efficient and reliable operation of the plant. The shakedown period shall not exceed 90 days. The requirements of Section III of this permit shall apply at all times.

XI. ACROYNMS AND ABBREVIATIONS

AQMD	Air Quality Management District
ASTM	American Society for Testing and Materials
BACT	Best Available Control Technology
BTU	British Thermal Unit
CAA	Clean Air Act
CEMS	Continuous Emissions Monitoring System
CFR	Code of Federal Regulations
CO	Carbon Monoxide
CO_2e	Carbon Dioxide Equivalent
CTG	Combustion Turbine Generator
CTM	Conditional Test Method
District	Antelope Valley Air Quality Management District
DLN	Dry Low NO_X
(d)scf	(dry) Standard Cubic Feet
EPA	Environmental Protection Agency
FDOC	Final Determination of Compliance
g	grams
GE	General Electric
GHG	Greenhouse Gas
gpm	Gallons Per Minute
gr	grains
HHV	Higher Heating Value
HRSG	Heat Recovery Steam Generator
hp	Horsepower
hr	Hour
IC	Internal Combustion
kPa	kilopascals
kW	Kilowatt
lb	Pounds
lbs	Pounds
MMBtu	Million British Thermal Units
MW	Megawatt
NAAQS	National Ambient Air Quality Standards
NNSR	Nonattainment New Source Review
NO_2	Nitrogen Dioxide
NO_X	Oxides of Nitrogen
NSPS	New Source Performance Standards
O_2	Oxygen
Ox-Cat	Oxidation Catalyst
PHPP	Palmdale Hybrid Power Project

PM	Total Particulate Matter
$PM_{2.5}$	Particulate Matter with aerodynamic diameter less than 2.5 micrometers
PM_{10}	Particulate Matter with aerodynamic diameter less than 10 micrometers
ppm	Parts Per Million
ppmvd	Parts Per Million by Volume, Dry basis
ppmv	Parts Per Million by Volume
PSD	Prevention of Significant Deterioration
PUC	Public Utilities Commission
RATA	Relative Accuracy Test Audit
SCR	Selective Catalytic Reduction
SF_6	Sulfur Hexafluoride
SO_2	Sulfur Dioxide
SO_X	Oxides of Sulfur
STG	Steam Turbine Generator
STP	Solar-thermal Plant
TDS	Total Dissolved Solids
tpy	Tons Per Year
yr	Year

XII. AGENCY NOTIFICATIONS

All correspondence as required by this Approval to Construct must be sent to:

A. Director, Air Division (Attn: AIR-5)
EPA Region IX
75 Hawthorne Street
San Francisco, CA 94105-3901

Email: R9.AEO@epa.gov
Fax: (415) 947-3579

With a copy to:

B. Air Pollution Control Officer
Antelope Valley Air Quality Management District
43301 Division Street, Suite 206
Lancaster, CA 93535
Fax: (661) 723-3450

EXHIBIT F

DECLARATION OF RONALD ROUSE

Declaration of
Ronald W. Rouse
Carlsbad Energy Center Project
(07-AFC-6)

I, Ronald W. Rouse, declare as follows:

1. I am an attorney, licensed to practice in all Courts in the State of California (SBN 058177). I was retained as an expert witness by Carlsbad Energy Center LLC to provide land use, environmental and other such legal consulting services for the Carlsbad Energy Center Project ("CECP" or the "Project").

2. I caused to be prepared, or prepared the testimony set forth in Section E of Applicant's Supplemental Testimony as such relates to the applicability of the city of Carlsbad's ("City") September 27, 2011 amendments to portions of the City's General Plan, Zoning Code and related City documents concerning generation of electrical energy in Carlsbad. Such testimony is in support of the Application for Certification for CECP and is based on my independent analysis of data from reliable documents and sources and my 37+ years of professional experience and knowledge.

3. I caused to be prepared or prepared the testimony previously submitted to the California Energy Commission related to the topic of Land Use. Such testimony included CECP's conformity with all laws, ordinances, regulations, and statutes. In addition, I presented testimony for this proceeding at prior evidentiary hearings regarding land use issues.

4. It is my professional opinion that the previous testimony provided to the California Energy Commission combined with the Supplemental Testimony referred to herein is valid and accurate with respect to the issues addressed.

5. I am personally familiar with the facts and conclusions related in the testimony presented by me and, if called as a witness, I could testify competently thereto.

I declare under penalty of perjury that the foregoing is true and correct to the best of my knowledge and belief.

Nov. 18, 2011
Date

Ronald W. Rouse
Ronald W. Rouse

71016982.1 0035434-00009

THE ENERGY RESOURCES CONSERVATION AND DEVELOPMENT
COMMISSION OF THE STATE OF CALIFORNIA
1516 NINTH STREET, SACRAMENTO, CA 95814
1-800-822-6228 – WWW.ENERGY.CA.GOV

APPLICATION FOR CERTIFICATION FOR THE CARLSBAD ENERGY CENTER PROJECT	Docket No. 07-AFC-6 PROOF OF SERVICE (Revised 10/24/2011)

CARLSBAD ENERGY CENTER LLC'S
Supplemental Testimony, Exhibits, Witness List, and Time Estimates for Examination of Witnesses dated November 18, 2011

CALIFORNIA ENERGY COMMISSION
Attn: Docket No. 07-AFC-6
1516 Ninth Street, MS-4
Sacramento, CA 95814-5512
docket@energy.state.ca.us

APPLICANT
Jennifer Hein
George Piantka, P.E.
NRG Energy, West
5790 Fleet Street, Suite 200
Carlsbad, CA 92008
jennifer.hein@nrgenergy.com
george.piantka@nrgenergy.com

APPLICANT'S CONSULTANTS
Robert Mason, Project Manager
CH2M Hill, Inc.
6 Hutton Centre Drive, Ste. 700
Santa Ana, CA 92707
Robert.Mason@ch2m.com

Megan Sebra
CH2M Hill, Inc.
2485 Natomas Park Drive, Ste. 600
Sacramento, CA 95833
Megan.Sebra@ch2m.com

COUNSEL FOR APPLICANT
John A. McKinsey
Stoel Rives LLP
500 Capitol Mall, Ste. 1600
Sacramento, CA 95814
jamckinsey@stoel.com

INTERESTED AGENCIES
California ISO
(*e-mail preferred*)
e-recipient@caiso.com

INTERVENORS

Terramar Association
Kerry Siekmann & Catherine Miller
5239 El Arbol
Carlsbad, CA 92008
***email service preferred**
siekmann1@att.net

City of Carlsbad
South Carlsbad Coastal Redevelopment Agency
Allan J. Thompson
Attorney for City
21 "C" Orinda Way #314
Orinda, CA 94563
***email service preferred**
allanori@comcast.net

City of Carlsbad
South Carlsbad Coastal Redevelopment Agency
Joseph Garuba, Municipals Project Manager
Ronald R. Ball, Esq., City Attorney
1200 Carlsbad Village Drive
Carlsbad, CA 92008
***email service preferred**
Joe.Garuba@carlsbadca.gov;
***email service preferred**
ron.ball@carlsbad.ca.gov

California Unions for Reliable Energy ("CURE")
Gloria D. Smith & Marc D. Joseph
Adams Broadwell Joseph & Cardozo
601 Gateway Boulevard, Suite 1000
South San Francisco, CA 94080
gsmith@adamsbroadwell.com
mdjoseph@adamsbroadwell.com

Center for Biological Diversity
c/o William B. Rostove
EARTHJUSTICE
426 17th St., 5th Floor
Oakland, CA 94612
***email service preferred**
wrostov@earthjustice.org

Power of Vision
Julie Baker and Arnold Roe, Ph.D.
4213 Sunnyhill Drive
Carlsbad, CA 92013
***email service preferred**
julbaker@pacbell.net
roe@ucla.edu

Rob Simpson
Environmental Consultant
27126 Grandview Avenue
Hayward, CA 94542
***email service preferred**
rob@redwoodrob.com

April Rose Sommer
Attorney for Rob Simpson
P.O. Box 6937
Moraga, CA 94570
***email service preferred**
aprilsommerlaw@yahoo.com

ENERGY COMMISSION-DECISIONMAKERS
JAMES D. BOYD
Vice Chair and Presiding Member
jboyd@energy.state.ca.us

Karen Douglas
Commissioner and Associate Member
kldougla@energy.state.ca.us

Galen Lemei
Advisor to Commissioner Douglas
e-mail service preferred
glemei@energy.state.ca.us

Tim Olson
Adviser to Vice Chair Boyd
tolson@energy.state.ca.us

Paul Kramer
Hearing Office
pkramer@energy.state.ca.us

ENERGY COMMISSION STAFF
Mike Monasmith
Siting Project Manager
mmonasmi@energy.state.ca.us

Dick Ratliff
Staff Counsel
dratliff@energy.state.ca.us

ENERGY COMMISSION PUBLIC ADVISOR
Jennifer Jennings
Public Adviser's Office
***email service preferred**
publicadviser@energy.state.ca.us

DECLARATION OF SERVICE

I, Kimberly J. Hellwig, declare that on November 18, 2011, I deposited copies of the aforementioned document in the United States mail at 500 Capitol Mall, Suite 1600, Sacramento, California 95814, with first-class postage thereon fully prepaid and addressed to those identified on the Proof of Service list above.

AND/OR

Transmission via electronic mail was consistent with the requirements of California Code of Regulations, Title 20, sections 1209, 1209.5, and 1210. All electronic copies were sent to all those identified on the Proof of Service list above.

I declare under penalty of perjury that the foregoing is true and correct.

Kimberly J. Hellwig