DOCKET	
09-AFC-6	
DATE	JAN 29 2010
RECD.	FEB 01 2010

January 29, 2010

Mr. Alan Solomon
Project Manager
California Energy Commission
1516 Ninth Street
Sacramento, CA 95814

RE: Blythe Solar Power Project, Docket No. 09-AFC-6
Data Responses to January 7, 2010 CEC Workshop Queries
Data Responses to January 6, 2010 CEC Staff Email Queries
Data Responses to January 11, 2010 CEC Staff Email Queries
Attachment DR-CR-120a & b (Cultural Resources Impact Blocks)

Dear Mr. Solomon,

Attached please find the above referenced data responses for the Palo Verde I, LLC Blythe Solar Power Project.

Please feel free to call me directly at 510/524-4517 if you have any questions on this supplemental submittal or any other aspects of our Data Responses.

Sincerely,

Alice L. Harron
Senior Director, Development

Solar Millennium LLC
1625 Shattuck Ave. Suite 270
Berkeley, CA 94709-1611
t. (1) 510.524.4517
f. (1) 510.524.5516
Info@SolarMillennium.com
http://www.SolarMillennium.com

Data Responses to January 6, 2010 CEC Staff Email Queries

Blythe Solar Power Project
Docket No. 09-AFC-6

Data Response Queries – January 6, 2010

TSE-DR-230: Per an email request from Laiping Ng of the CEC on January 6, 2010, the following revised Figure 2-9 of the Blythe switchyard with new equipment is being provided for review. **See attached revised Figure 2-9.**

A new proposal has been developed for the interconnection of the four generators at the BSPP to the 500-kV bus at the Colorado River substation. The new proposed approach will be physically different but electrically the same as the interconnection studied in the Phase I Cluster Study. The new interconnection will be accomplished by stepping up each of the 18-kV generator voltages to 230 kV using two winding transformers. The output of the 230-kV transformers will be collected in groups of two and placed on a 230-kV transmission line. This will create a double circuit 230-kV transmission line from the BSPP plant site to the 230-kV bus at the Colorado River substation. The 230-kV bus at the Colorado River substation would then be connected to the 500-kV bus at the Colorado River substation using two winding transformers.

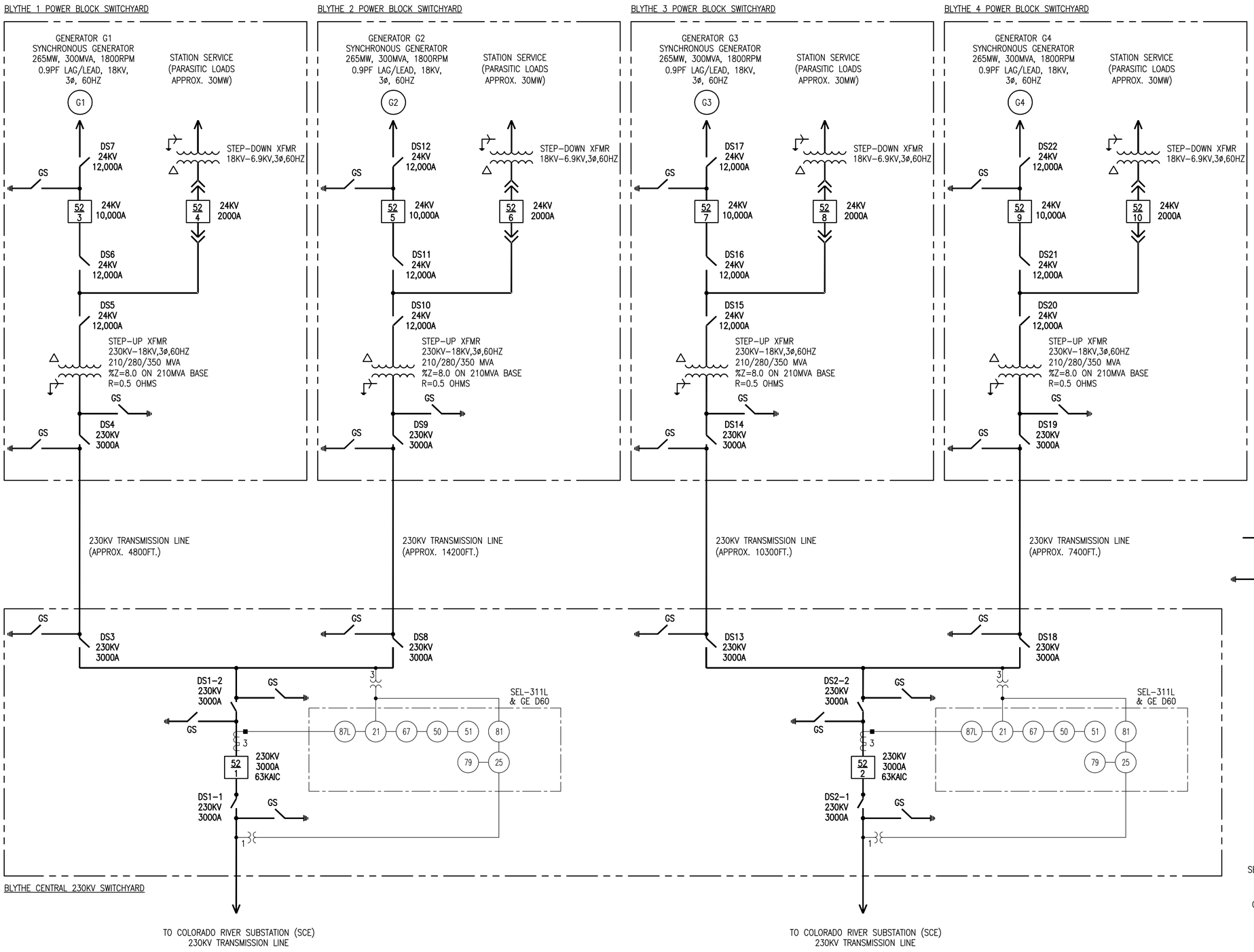

ABBREVIATIONS:

A	AMPERES
APPROX.	APPROXIMATELY
DS	DISCONNECT SWITCH
FT.	FEET
G	GENERATOR
GS	GROUND SWITCH
HZ	HERTZ
IC	INTERRUPTING CURRENT
KA	KILO AMPERES
KV	KILOVOLTS
KVA	KILO VOLTAMPERE
LA	LIGHTNING ARRESTER
MI	MILES
MVA	MEGA VOLTAMPERE
MW	MEGA WATTS
NEUT,N	NEUTRAL
PF	POWER FACTOR
RES	RESISTOR
V	VOLTS
XFMR	TRANSFORMER

NOTE: ABBREVIATION MAY OR MAY NOT INCLUDE PERIOD/S, OR LETTER S FOR PLURAL FORM.

SYMBOLS	DESCRIPTION
52 X	CIRCUIT BREAKER X
	POWER TRANSFORMER
G	STEAM TURBINE GENERATOR SYNCHRONOUS GENERATOR 265MW, 300MVA, 1800RPM 0.9PF LAG/LEAD, 18KV, 3ø, 60HZ
	DISCONNECT SWITCH THREE POLE GANG OPERATED
GS	GROUND SWITCH
87L	CURRENT DIFFERENTIAL
21	DISTANCE
67	DIFFERENTIAL OVERCURRENT
50	INSTANTANEOUS OVERCURRENT
51	TIME OVERCURRENT
81	OVER/UNDER FREQUENCY
79	AUTO-RECLOSING
25	SYNCHRONISM CHECK
SEL-311L RELAY	LINE CURRENT DIFFERENTIAL PROTECTION AND AUTOMATION SYSTEMS
GE D60 RELAY	LINE DISTANCE PROTECTION SYSTEM

NOT FOR CONSTRUCTION

Prepared for:

Solar Millennium LLC

AECOM USA, Inc. AECOM
440 STEVENS AVENUE
SUITE 250
SOLANA BEACH, CA 92075

REVISIONS

NO.	DATE	DESCRIPTION	BY	APPD.

THESE PLANS ARE A SERVICE PROVIDED EXCLUSIVELY TO THE OWNER, AND ARE THE SOLE PROPERTY OF THE ENGINEER. ANY UNAUTHORIZED RE-USE OF THIS WORK WITHOUT THE ENGINEER'S WRITTEN PERMISSION WILL BE CONSIDERED AN INFRINGEMENT OF THE ENGINEERS WORK.

"IT IS A VIOLATION OF THE PROFESSIONAL LICENSE LAW FOR ANY PERSON TO ALTER THIS DRAWING IN ANY WAY, UNLESS ACTING UNDER THE DIRECTION OF A LICENSED PROFESSIONAL ENGINEER/ARCHITECT AS APPLICABLE. THE ALTERING ENGINEER/ARCHITECT SHALL AFFIX HIS/HER SEAL AND THE NOTATION "ALTERED BY" FOLLOWED BY HIS/HER SIGNATURE AND DATE OF ALTERATION."

BLYTHE SOLAR POWER PROJECT

RIVERSIDE COUNTY, CALIFORNIA

Figure 2-9 - Revised

ELECTRICAL

ONE LINE DIAGRAM

PROJECT MANAGER: R. ARDOLINO	SCALE: NTS
DESIGNED BY: R.SCHUGMANN	DATE: DEC. 22, 2009
DRAWN BY: R.SCHUGMANN	AECOM PROJECT NO. 60100008
CHECKED BY:	
FILE LOCATION:	
DRAWING NO.	

E-101-R

SHEETS NO. 1 OF

Data Responses to January 7, 2010 CEC Workshop Queries

Blythe Solar Power Project
Docket No. 09-AFC-6

Data Response Queries – CEC Workshop, January 7, 2010

The CEC staff had requested additional information regarding several Alternative issues during the Data Response Workshop on January 7, 2009. The following responses are included for review.

ALT-DR: Schedule for surveys for alternatives.

The table below provides the timeframes for the proposed biological and cultural resources surveys of the reconfigured alternatives at Blythe Solar Power Project

Blythe – Surveys for Reconfigured (Alternatives)

Resource	Surveys to be completed for Re-Configured Projects	Survey window
Vegetation Communities	• Vegetation mapping within newly proposed areas within the revised project disturbance area and 1-mile CEC buffer	February 2010
Jurisdictional Waters	• Delineation of jurisdictional waters within newly proposed areas of the revised project disturbance area and at least 150 upstream and downstream to extent that impact might be incurred	February 2010
Special-status plant species	• Focused botanical surveys within newly proposed areas of the revised project disturbance area and1-mile CEC buffer that contain suitable habitat for special status species or potential for invasive weeds	Spring Surveys: February - July 2010 (TBD based on rainfall patterns and optimum flowering times in 2010) Fall Surveys: August – October 2010 (TBD Based on rainfall patterns and response of late-season flowering plants)
Desert tortoise	• Protocol survey of newly proposed areas within the revised project disturbance area (not overlapping with previous survey areas) and associated CEC buffer transects	March 15 to May 31, 2010
Western burrowing owl	• Protocol survey of newly proposed	March15 to July 15,

Resource	Surveys to be completed for Re-Configured Projects	Survey window
	areas within the revised project disturbance area (not overlapping with previous survey areas) and associated buffer transects	2010
Avian Point Counts	• Point count survey of newly proposed areas within the revised project disturbance area (not overlapping with previous survey areas)	March to May 2010
Special-status wildlife and general Wildlife Surveys	• Will occur concurrent with other wildlife surveys	March to June 2010
Biological Resources Technical Report for	• Will include existing conditions and impact analysis for complete reconfigured project (both those surveyed previously and those surveyed in 2010), with technical reports for newly surveyed areas for botany (vegetation and special status plants), jurisdictional delineation, DETO, WEBO, Avian Point Counts)	July 2010 (would not contain results of Fall special-status plant surveys)
Cultural Resources Class III Survey Reports	• Class III archaeological and built environment surveys to include historic map research, DPR forms, and maps and analysis of the comparative advantages and disadvantages of the proposed project and alternative project redesigns.	To begin in late January 2010, with results to be provided under confidential cover to staff and BLM in May 2010.

ALT-DR: Shape files.

Shape files have been provided to CEC staff (Emily Capello) on January 12, 2010.

ALT-DR: Explain difference between boilers and heaters; why change for one project and not the other?

Historically, all solar trough plants that use Therminol as the heat transfer fluid have included a method of keeping the HTF circulating and warm during cold winter nights or during extended winter maintenance outages. Simple gas-fired heaters have been used in solar-only plants that do not have large fossil boilers for supplemental electricity production. Furthermore, the new generation of plants planned for California over the next several years will have solar fields two to three times as large as the largest solar fields built to date. The risk of HTF freezing in these very large solar fields, with very large HTF volumes, is not completely understood. As such, Applicant had planned these new plants with standard gas-fired HTF heaters.

Data Response Queries – CEC Workshop, January 7, 2010

AQ-DR-2: Does the model take into account of Desert Glaze (silica binding or crust in baseline)?

Desert Glaze (also known as "Desert Pavement" and "Desert Varnish") was applied to the pre-Project wind erosion estimates for BSPP based on soil type. There are three soil types (Gunsight, Aco, and Cipriano) present on the Project site, and three different WEPS models were created to represent the wind erosion from these soil types. An average of all three model runs was used to estimate the emissions associated with wind erosion. The three model runs exhibit the wide variation in conditions that can be expected from soils that are resistant to wind erosion (i.e., the Gunsight series) to soils that are highly susceptible to wind erosion (i.e., the Aco series) due to the high proportion of fine and very fine sands. The areas of desert glaze will exhibit lower rates of predicted wind erosion, and will exhibit wind erosion levels approaching that of the Aco series when disturbed. A more detailed analysis can be found in Attachment C, Water and Wind Erosion Modeling, of the Geotechnical Report.

Desert Glaze was not applied to the pre-Project wind erosion estimates for the PSPP because Desert Glaze was not observed during the geologic surveys conducted at the site, and the soils were determined to be inconsistent with this phenomenon. The average of the six textural analyses concluded that the soils on the PSPP site are characterized as 90 percent sands. This is consistent with field observations and the published descriptions for the Rositas-Dune land-Carsitas map unit. The Rositas sand was chosen as the representative soil type in the WEPS model to predict wind erosion for PSPP. A more detailed analysis can be found in Attachment C, Water and Wind Erosion Modeling, of the Geotechnical Report.

AQ-DR-3: Geotechnical Report - silt content, was method 200 sieve data?

Silt content was measured according to ASTM D422, which does use the 200 mesh sieve.

AQ-DR-6: Reference to Attachment DR-AIR-6 - is it DR AIR 18?

The Construction Greenhouse Gas Emission Estimates attachment for Blythe (i.e., BSPP) was provided as Attachment DR-AIR-6 because the construction GHG question was DR-AIR-6 in the Blythe Data Requests. The Construction Greenhouse Gas Emission Estimates for Palen (i.e., PSPP) was provided as Attachment DR-AIR-18 in the Palen Data Responses because the construction GHG question was DR-AIR-18 in the Palen Data Requests.

AQ-DR-8: Why Tier 3?

Tier 3 engines were selected for predicting emissions because they have lower emissions than the other available options. A worst-case modeling scenario was selected which assumed the heavy earthwork equipment is operated in close proximity to the Project boundary, and based on AECOM's experience with modeling construction emissions for other solar energy projects, NOx emissions need to be as low as possible to ensure that the Project does not cause exceedances of the NO2 1-hour ambient air quality standard at the fenceline. This potential impact is due to the low release height (stack height) of the construction equipment and the high concentration of equipment near the fenceline assumed for the worst-case scenario used for modeling. Note that the worst-case scenario used for modeling purposes would be an infrequent occurrence given the extremely conservative assumptions used to develop the scenario. This situation is also not unique to BSPP; any construction project that would operate large

numbers of heavy equipment near a fenceline would have the potential for similar short-term high impacts.

AQ-DR-9: How was offroad model used? Did those emission factors go up and down? How equipment was weighted?

The OFFROAD model was used to calculate statewide average emission factors for construction equipment. The equipment is not weighted in the OFFROAD model; the model calculates emission factors for each type of equipment and horsepower range individually.

The emission factors used for estimating construction emissions submitted with the Data Responses differ from the emission factors used for the construction emissions that were submitted with AFC the in the range of approximately 30 percent higher to 43 percent lower depending on the specific equipment and pollutant. However, the change varies somewhat according to equipment type and horsepower range, and differs slightly between the PSPP and BSPP sites. A table showing the percentage change in emission factors used for BSPP is provided as Table 1.

AQ-DR-11 and 12: Why use NW? Are construction impacts worse in SE

The NW quadrant was used because, according to the Blythe Airport windrose, the prevailing wind blows from the south. To estimate worse-case impacts, the five area sources (from the five phases of construction: 1. clearing and grubbing; 2. scraping and grading; 3. mirror installation; 4. power block construction; and 5. vehicle travel from the laydown area to the construction area along a north-south corridor) were aligned in a generally north-south orientation with the edge of the heavy earthwork plot against the northern fenceline. In this way, the modeling would predict the worst-case cumulative impact of these five phases of construction at the closest fenceline in the downwind direction.

Because the prevailing wind blows from the south, the wind would blow construction emissions away from the southern fenceline; thus, construction impacts in the SE quadrant of the Project site would be lower than modeling the same emissions against the northern fenceline.

AQ- DR 21: Did this go to District? District permit requires current tier.

The Applicant proposed a Tier 2 engine for the emergency generator based on the emission standards identified in 40 Code of Federal Regulations (CFR), Part 60, Subpart IIII, Standards of Performance for Stationary Compression Ignition Internal Combustion Engines. Pursuant to §60.4202(a)(2) of that subpart, engines with a maximum rating of more than 50 horsepower (Hp) must meet the emission standards listed in 40 CFR 89.112 for all pollutants beginning in 2007. The emission standards listed in 40 CFR 89.112 for engines with rated power greater than 560 kilowatt (kW) (750 Hp) are Tier 2 standards which are: 6.4 grams per kilowatt hour (g/kWh) for NOx and NMHC combined, 3.5 g/kWh for CO and 0.20 g/kWh for PM.

An application for the larger emergency generator engine (i.e., the 2,922 Hp genset) has not yet been submitted to the SCAQMD (for PSPP) or MDAQMD (for BSPP). These applications will be submitted to the respective air districts by February 1, 2010, with a copy to CEC.

AQ-DR-26: Question on math? Start up = 5% of total MWh. Seems to be more than boiler can do. Show calcs.

The boiler capacity does not directly influence the MWh "saved" by the use of the boiler. The boiler is used to maintain the steam seal on the steam turbine and air cooled condenser (ACC) and maintain the ACC in an evacuated condition (under vacuum) during non-generating periods (i.e., at night). The size of the boiler is dictated by the steam requirements for those two functions only. The MWh "saved" is estimated by predicting the time required to generate enough steam to establish the steam seal on the turbine and ACC and then evacuate the ACC using only solar heat (i.e., assuming that the gas-fired boiler did not exist). According to engineering estimates, the time required to generate sufficient steam to establish the steam seal on the turbine and ACC and then evacuate the ACC is approximately one hour following sunrise. One hour represents approximately six percent of the daily availability for power production during the summer (16 hours per day of sunlight) and approximately 10 percent of the availability during the winter (10 hours per day of sunlight). The actual calculation to determine MWh "saved" was performed with a thermodynamic model of the solar plant operation, and is not a simple calculation.

Table 1 OFFROAD Emission Factors: Difference between MDAQMD and CA Statewide Runs

Equipment Type	Fuel	Horsepower	Model Year	ARB Off-Road Model Category	CO (lb/hr)[a]	ROG (lb/hr)[a]	NOx (lb/hr)[a]	SOx (lb/hr)[a]	PM10 (lb/hr)[a]	PM2.5 (lb/hr)[b]
375 cfm Compressor	Diesel	20	2008	Air Compressors	-43%	-43%	-43%	-43%	-43%	-43%
Air Compressor Ingersol Rand, P65WK	Diesel	23.5	2008	Air Compressors	-43%	-43%	-43%	-43%	-43%	-43%
Backhoe, 450E	Diesel	124	2007	Tractors/Loaders /Backhoes	1%	1%	1%	1%	1%	1%
Concrete Pump Rig, B50	Diesel	130	2007	Other Construction Equipment	6%	6%	6%	6%	6%	6%
Crane 20 Tn Grove, YB7722	Diesel	130	2007	Cranes	3%	3%	3%	3%	3%	3%
Dozer,Cat, D10T	Diesel	580	2006	Crawler Tractors	-46%	-46%	-46%	-46%	-46%	-46%
Excavator, 365C	Diesel	404	2006	Excavators	0%	0%	0%	0%	0%	0%
Folklift, DP45K	Diesel	124	2007	Forklifts	-1%	-1%	-1%	-1%	-1%	-1%
Generator, XQ400	Diesel	328	2006	Generator Sets	30%	30%	30%	30%	30%	30%
Grade-All, TL1055	Diesel	125	2007	Rough Terrain Forklifts	0%	0%	0%	0%	0%	0%
Loader, 972H	Diesel	287	2006	Rubber Tired Loaders	1%	1%	1%	1%	1%	1%
Motor Grader, 160M	Diesel	213	2006	Graders	0%	0%	0%	0%	0%	0%
Paving Machine, AP1055D	Diesel	224	2006	Pavers	-6%	-6%	-6%	-6%	-6%	-6%
Roller, CB-534D	Diesel	130	2007	Rollers	-1%	-1%	-1%	-1%	-1%	-1%
Scraper Cat, 657G	Diesel	564	2006	Scrapers	10%	10%	10%	10%	10%	10%
Scraper Cat, 657G, Blade Engine	Diesel	410	2006	Other Construction Equipment	-2%	-2%	-2%	-2%	-2%	-2%
Sheeps Foot, 825G	Diesel	315	2006	Rollers	-2%	-2%	-2%	-2%	-2%	-2%
Vibratory Roller, 825H	Diesel	354	2006	Rollers	-2%	-2%	-2%	-2%	-2%	-2%

Table 1 OFFROAD Emission Factors: Difference between MDAQMD and CA Statewide Runs

Equipment Type	Fuel	Horsepower	Model Year	ARB Off-Road Model Category	CO (lb/hr)[a]	ROG (lb/hr)[a]	NOx (lb/hr)[a]	SOx (lb/hr)[a]	PM10 (lb/hr)[a]	PM2.5 (lb/hr)[b]
Scraper Cat 623	Diesel	330	2006	Scrapers	2%	2%	2%	2%	2%	2%
Asphalt Paver, Cat AP1055B	Diesel	174	2007	Pavers	2%	2%	2%	2%	2%	2%
Backhoe, Cat, 430E	Diesel	97	2008	Tractors/Loaders /Backhoes	0%	0%	0%	0%	0%	0%
175-250 kW Gen Set	Diesel	400	2006	Generator Sets	30%	30%	30%	30%	30%	30%
Light Tower 5 KW	Diesel	8	2008	Generator Sets	-2%	-2%	-2%	-2%	-2%	-2%
600 A Temp Power	Diesel	400	2006	Generator Sets	30%	30%	30%	30%	30%	30%
200 A Temp Power	Diesel	135	2007	Generator Sets	-4%	-4%	-4%	-4%	-4%	-4%
Compactor, Cat 826H	Diesel	410	2006	Rollers	-2%	-2%	-2%	-2%	-2%	-2%
185 cfm Compressor	Diesel	20	2008	Air Compressors	-43%	-43%	-43%	-43%	-43%	-43%
999 Manitiwoc	Diesel	390	2006	Cranes	-7%	-7%	-7%	-7%	-7%	-7%
2250 Manitiwoc 300 Ton-Upper engine	Diesel	450	2006	Cranes	-7%	-7%	-7%	-7%	-7%	-7%
2250 Manitiwoc 300 Ton -carrier engine	Diesel	460	2006	Cranes	-7%	-7%	-7%	-7%	-7%	-7%
Crane, 40-Ton, Grove, RT600	Diesel	173	2007	Cranes	3%	3%	3%	3%	3%	3%
Dozer, Cat D-9	Diesel	410	2006	Crawler Tractors	-1%	-1%	-1%	-1%	-1%	-1%
Dozer, Cat D-6	Diesel	150	2007	Crawler Tractors	1%	1%	1%	1%	1%	1%
Dozer, Cat 824	Diesel	354	2006	Rubber Tired Dozers	-1%	-1%	-1%	-1%	-1%	-1%
Loader, Cat, 972G	Diesel	275	2006	Rubber Tired Loaders	1%	1%	1%	1%	1%	1%
Motor Grader, Cat 140H	Diesel	150	2007	Graders	1%	1%	1%	1%	1%	1%
Diesel Welder 400 Amp	Diesel	31	2008	Welders	-2%	-2%	-2%	-2%	-2%	-2%

Table 1 OFFROAD Emission Factors: Difference between MDAQMD and CA Statewide Runs

Equipment Type	Fuel	Horsepower	Model Year	ARB Off-Road Model Category	CO (lb/hr)[a]	ROG (lb/hr)[a]	NOx (lb/hr)[a]	SOx (lb/hr)[a]	PM10 (lb/hr)[a]	PM2.5 (lb/hr)[b]
Hydro Crane 70-75 Ton RT	Diesel	275	2006	Cranes	-7%	-7%	-7%	-7%	-7%	-7%
Hydro Crane 30-35 Ton RT	Diesel	155	2007	Cranes	3%	3%	3%	3%	3%	3%
Tower Crane (Lieberr 630)	Diesel	275	2006	Cranes	-7%	-7%	-7%	-7%	-7%	-7%
Forklift 10000# RT	Diesel	100	2007	Forklifts	-1%	-1%	-1%	-1%	-1%	-1%
Forklift 30000#	Diesel	130	2007	Forklifts	-1%	-1%	-1%	-1%	-1%	-1%
CAT IT 28 Utility Loader	Diesel	50	2008	Rubber Tired Loaders	9%	9%	9%	9%	9%	9%
Truck Crane	Diesel	130	2007	Cranes	3%	3%	3%	3%	3%	3%
40'- 60' Manlift	Diesel	50	2008	Aerial Lifts	1%	1%	1%	1%	1%	1%
90' Manlift	Diesel	70	2008	Aerial Lifts	-11%	-11%	-11%	-11%	-11%	-11%
Scissor Lift	Diesel	50	2008	Aerial Lifts	1%	1%	1%	1%	1%	1%

Computation: (MDAQMD EF - CA EF)/(CA EF)*100

a. From Table 1.1 for diesel and Table 1.2 for gasoline.

b. Diesel PM2.5 emission factor [lb/hr] = PM10 emission factor [lb/hr] x PM2.5 fraction of PM10

PM2.5 Fraction of PM10 in Diesel Engine Exhaust = 0.920 and PM2.5 Fraction of PM10 in Gasoline Engine Exhaust =0.756 from Appendix A, Final–Methodology to Calculate Particulate Matter (PM) 2.5 and PM 2.5 Significance Thresholds, SCAQMD, October 2006

Emissions [pounds per day] = Emission factor [pounds per hour] x Number pieces of equipment x Operating time for each piece [hours per day]

Data Responses to January 11, 2010 CEC Staff Email Queries

Blythe Solar Power Project
Docket No. 09-AFC-6

Data Response Queries – Request from CEC Staff, January 11, 2010

BIO-DR: Per an email request from Amy Golden of the CEC on January 11, 2010, the following comprehensive tables of existing conditions and impacts for vegetation communities associated with the Blythe Solar Power Plant are included for review (Tables 1 and 2, respectively).

Table 1. Existing Vegetation Communities and Other Cover Types (Acres)[a]

Vegetation Communities and Other Cover Types	Revised AFC DA	Transmission Line DA	Project DA [b]	Revised Buffer Area	BRSA
Riparian					
Desert Dry Wash Woodland	175.2	0.2	175.3	554.6	729.9
Unvegetated Ephemeral Dry Wash	7.5	0.0	7.5	1.5	9.0
Creosote Bush–Big Galleta Grass	367.3	0.1	367.4	42.1	409.6
Subtotal Riparian	***550.0***	***0.3***	***550.3***	***598.2***	***1,148.5***
Upland					
Stabilized and Partially Stabilized Desert Dunes	0.0	37.1	37.1	649.7	686.8
Sonoran Creosote Scrub Brush	6,475.7	12.7	6,488.4	13,249.9	19,738.4
Subtotal Upland	***6,475.7***	***49.9***	***6,525.6***	***13,899.6***	***20,425.1***
Other Cover Types					
Agriculture	0.8	0.0	0.8	1,621.6	1,622.3
Developed	0.0	0.0	0.0	147.3	147.3
Disturbed Habitat	0.0	0.0	0.0	16.2	16.2
Subtotal Other Cover Types	***0.8***	***0.0***	***0.8***	***1,785.0***	***1,785.8***
Total Acres[c]	***7,026.4***	***50.2***	***7,076.6***	***16,282.8***	***23,359.4***

Table 1. Existing Vegetation Communities and Other Cover Types (Acres)[a]

Vegetation Communities and Other Cover Types	Revised AFC DA	Transmission Line DA	Project DA [b]	Revised Buffer Area	BRSA

a The acreages for these vegetation communities were updated for responses to the December 7, 2009 data requests that were provided to the CEC on January 6, 2010. An example is delineating desert dry wash woodland 150 feet upstream of the Project Disturbance Area, resulting in changes to vegetation communicates within the buffer from the previous reports.

b Project DA = Revised AFC DA + Transmission Line DA. DA = Disturbance Area.

c Acreages in this table may not add due to rounding.

Table 2. Anticipated Permanent Impacts to Vegetation Communities and Waters of the State in the AFC and Transmission Line Disturbance Area (Acres)[a]

Vegetation Communities and Other Cover Types	Permanent Direct Impacts			Permanent Indirect Impacts[e]	Total Permanent Impacts
	Revised AFC DA[b]	Transmission Line DA[c]	Project DA[d]		
Riparian					
Dry Desert Wash Woodland	175.2	0.2	175.3	94.3	269.6
Unvegetated Ephemeral Dry Wash	7.5	0.0	7.5	0.8	8.3
Creosote Bush– Big Galleta Grass[f]	367.3	0.1	367.4	38.5	406.0
Subtotal Riparian	***550.0***	***0.3***	***550.3***	***133.7***	***683.9***
Upland					
Active Desert Dunes	0.0	37.1	37.1	-	37.1
Sonoran Creosote Bush Scrub	6,475.7	12.7	6,488.4	-	6488.4
Subtotal Upland	***6,475.7***	***49.9***	***6,525.6***	***-***	***6525.6***
Other Cover Types					
Agricultural Fields	0.8	0.0	0.8	-	0.8
Developed	0.0	0.0	0.0	-	0.0
Disturbed Habitat	0.0	0.0	0.0	-	*0.0*
Subtotal Other Cover Types	***0.8***	***0.0***	***0.8***	***-***	***0.8***
Total Acres	**7,026.4**	**50.2**	**7,076.6**	**133.7**	**7,210.3**

a DA = Disturbance Area.

b The acreages for these vegetation communities were updated for responses to the December 7, 2009 data requests that were provided to the CEC on January 6, 2010. The acreage updates occurred in the buffer area and did not change calculations for impact areas from the last submittal included in the BSPP Supplemental Biological Resources Technical Report (November 25, 2009.

c Not previously reported in the AFC (AECOM 2009, Section 5.3.3.1, Table 5.3-8). Includes only the areas of disturbance associated with the construction of the transmission line features (the entire 7 mile Former Transmission Line Disturbance Area was calculated as the disturbance area in the previous supplemental report submitted October 2009).

d The Project DA described in the AFC has been revised to include the Revised AFC DA and the Transmission Line DA.

e Downstream waters containing wash dependent vegetation would likely be indirectly impacted by the rerouting of the on-site washes. The data presented here represent the full complement of washes downstream that may be indirectly impacted; however, a full determination of this impact will rely on hydrologic studies that are still in progress. It is anticipated that the indirect permanent impact estimate will be refined and potentially decrease due to rerouted drainages delivering water back into washes on the eastern and southern boundary of the project.

f Although CDFG considers the swale network as ecologically relational to the larger washes within the survey area and thus jurisdictional waters of the state, CDFG does not consider them a significant aquatic feature.

Blythe Solar Power Project
Docket No. 09-AFC-6

Attachment DR-CR-120a &b

DR-CR-120a Plan View of Impact Blocks Disturbance Below Ground

DR-CR-120b Plan View of Impact Blocks Disturbance Level Above Ground

---

DR-CR-120

Information Requested:

Please provide to staff a series of scaled and dimensioned plan and profile views of the proposed project's (and alternative locations') impact blocks.

Response:

The plan view of impact blocks disturbance below ground and above ground are shown in Figures DR-CR-120a and b respectively on the following pages.

.

Foundations = 12 sq ft of area and are spaced at every 63 ft along the array

1 inch = 200 feet

Impact Block (Fenced Area):

(will be fully disturbed by cuts and fills to a general depth of 6-7 ft)

Power Block Area

(building foundations: generally a max. of 5 ft below finished ground surface)

Solar Loop Array (foundations vary from 10-16 feet below finished ground surface)

Drainage Channels (depth of 6-7 ft)

Utilities (trenching will generally be a max. of 6 ft below final ground surface)

Transmission Line

On Site Gas

Map Location

Archaeological Surface Area of Potential Effects (7,243 acres)

CEC Buffers (Additional 629 acres)

Archaeological Survey Area (8,005 acres)

Source: ESRI 2009; AECOM 2009

N
W
E
S

1 inch = 2,000 feet

0 2,000 4,000 Feet

Blythe Solar Power Project

DR-CR-120a
Plan View of Impact Blocks
Disturbance Below Ground

Solar Millennium

AECOM

Date: January 2010

Path: P:\2009\090830082 Sol Mil Blythe\6.0 GIS\6.3 Layout Reports\ClassIII_SurveyReport\6_CEC_DataRequests_Dec2009\DR-CUL-120 below ground.mxd, 01/19/10, wilsons5

Map Location

Archaeological Surface Area of Potential Effects (7,243 acres)
CEC Buffers (Additional 629 acres)
Archaeological Survey Area (8,005 acres)

Source: ESRI 2009; AECOM 2009

N
W
E
S

1 inch = 2,000 feet

0 2,000 4,000 Feet

Blythe Solar Power Project

DR-CR-120b
Plan View of Impact Blocks
Disturbance Level Above Ground

Solar Millennium

AECOM

Date: January 2010

Path: P:\2009\09080082 Sol MI Blythe\6.0 GIS\6.3 Layout\Reports\ClassIII_SurveyReport\6_CEC_DataRequests_Dec2009\DR-CUL-120 above ground.mxd, 01/19/10, wilsons5

STATE OF CALIFORNIA
ENERGY RESOURCES CONSERVATION AND DEVELOPMENT COMMISSION

In the Matter of: **APPLICATION FOR CERTIFICATION** **for the *BLYTHE SOLAR POWER PROJECT***	**Docket No. 09-AFC-6** **PROOF OF SERVICE** ***(Revised 1/26/2010)***

APPLICANT

Alice Harron
Senior Director of Project Development
1625 Shattuck Avenue, Suite 270
Berkeley, CA 94709-1161
harron@solarmillenium.com

Gavin Berg
Senior Project Manager
1625 Shattuck Avenue, Suite 270
Berkeley, CA 94709
berg@solarmillennium.com

APPLICANT'S CONSULTANT

Carl Lindner
AECOM Project Manager
1220 Avenida Acaso
Camarillo, CA 93012
arrie.bachrach@aecom.com

COUNSEL FOR APPLICANT

Scott Galati, Esq.
Galati/Blek, LLP
455 Capitol Mall, Suite 350
Sacramento, CA 95814
sgalati@gb-llp.com

Peter Weiner
Matthew Sanders
Paul, Hastings, Janofsky & Walker LLP
55 2nd Street, Suite 2400-3441
San Francisco, CA 94105
peterweiner@paulhastings.com
matthewsanders@paulhastings.com

INTERESTED AGENCIES

Holly L. Roberts, Project Manager
Bureau of Land Management
Palm Springs-South Coast Field Office
1201 Bird Center Drive Palm Springs, CA 92262
CAPSSolarPalen@blm.gov

California ISO
e-recipient@caiso.com

INTERVENORS

Tanya A. Gulesserian,
Marc D. Joseph
Adams Broadwell Joseph & Cardozo
601 Gateway Boulevard, Suite 1000
South San Francisco, CA 94080
tgulesserian@adamsbroadwell.com

ENERGY COMMISSION

Karen Douglas
Chair and Presiding Member
Ukldougla@energy.state.ca.usUH

Robert Weisenmiller
Commissioner and Associate Member
rweisenm@energy.state.ca.us

Raoul Renaud
Hearing Officer
rrenaud@energy.state.ca.us

Alan Solomon
Project Manager
asolomon@energy.state.ca.us

Lisa DeCarlo
Staff Counsel
ldecarlo@energy.state.ca.us

Public Adviser's Office
publicadviser@energy.state.ca.us

DECLARATION OF SERVICE

I, Carl Lindner, declare that on, January 29, 2010, I served and filed copies of the attached Blythe Solar Power Project Data Response Materials:

Data Responses to January 7, 2010 CEC Workshop Queries
Data Responses to January 6, 2010 CEC Staff Email Queries
Data Responses to January 11, 2010 CEC Staff Email Queries
Attachment DR-CR-120a & b (Cultural Resources Impact Blocks).

The original document, filed with the Docket Unit, is accompanied by a copy of the most recent Proof of Service list, located on the web page for this project at:

[http://www.energy.ca.gov/sitingcases/solar_millennium_blythe].

The document has been sent to the other parties in this proceeding (as shown on the Proof of Service list) and to the Commission's Docket Unit, in the following manner:

(*Check all that Apply*)

For service to all other parties:

_____ sent electronically to all email addresses on the Proof of Service list;

__X___ by personal delivery or by overnight delivery service or depositing in the United States mail at Camarillo, California with postage or fees thereon fully prepaid and addressed as provided on the Proof of Service list above to those addresses **NOT** marked "email preferred."

AND

For filing with the Energy Commission:

__X_ sending an original paper copy and one electronic copy, mailed and emailed respectively, to the address below (preferred method);

OR

_____ depositing in the mail an original and 12 paper copies, along with 13 CDs, as follows:

CALIFORNIA ENERGY COMMISSION
Attn: Docket No. 09-AFC-6
1516 Ninth Street, MS-4
Sacramento, CA 95814-5512

docket@energy.state.ca.us

I declare under penalty of perjury that the foregoing is true and correct.

Carl E. Lindner